RETURN TO UAO AR INDEX

Extra-Cost Doc.
6.4
New Bedford
6 4
214283

SDMS DocID 000214283

Total Environmental Restoration Contract

New England Division

USACE Contract No. DACW33-94-D-0002

FOSTER WHEELER ENVIRONMENTAL CORPORATION

USACE CONTRACT NO. DACW33-94-D-0002
TASK ORDER NO. 0017
TOTAL ENVIRONMENTAL RESTORATION CONTRACT

FINAL BASIS OF DESIGN/ DESIGN ANALYSIS REPORT (100%) 700 TO 2,000 GPM WATER TREATMENT SYSTEM NEW BEDFORD HARBOR SUPERFUND SITE New Bedford, Massachusetts

June 2002

Prepared for

U.S. Army Corps of Engineers
New England District
Concord, Massachusetts

2002-017-0072
6/24/02

USACE CONTRACT NO. DACW33-94-D-0002
TASK ORDER NO. 0017
TOTAL ENVIRONMENTAL RESTORATION CONTRACT

FINAL BASIS OF DESIGN/ DESIGN ANALYSIS REPORT (100%) 700 TO 2,000 GPM WATER TREATMENT SYSTEM NEW BEDFORD HARBOR SUPERFUND SITE New Bedford, Massachusetts

June 2002

Prepared for

U.S. Army Corps of Engineers
New England District
Concord, Massachusetts

2002-017-0072
6/24/02

USACE CONTRACT NO. DACW33-94-D-0002
TASK ORDER NO. 0017
TOTAL ENVIRONMENTAL RESTORATION CONTRACT

FINAL BASIS OF DESIGN/ DESIGN ANALYSIS REPORT (100%) 700 TO 2,000 GPM WATER TREATMENT SYSTEM NEW BEDFORD HARBOR SUPERFUND SITE New Bedford, Massachusetts

June 2002

Prepared for

U.S. Army Corps of Engineers
New England District
Concord, Massachusetts

Prepared by

Foster Wheeler Environmental Corporation
133 Federal Street
Boston, Massachusetts 02110

Revision	Date	Prepared By	Approved By	Pages Affected
2	6/24/02	J. Brinkman, P.E. E. Griffin	M. Otten, P.E.	All

TABLE OF CONTENTS

1.0 INTRODUCTION 1-1
1.1 Site History 1-1
1.2 Upper and Lower Harbor Cleanup Remedy 1-1
1.3 Water Treatment System Design Objectives 1-5
1.4 Organization of the Report 1-5

2.0 WATER TREATMENT SYSTEM DESIGN OVERVIEW 2-1
2.1 Existing Water Treatment Plant 2-1
2.2 Future OU #1 Water Treatment Plant 2-4

3.0 APPLICABLE OR RELEVANT AND APPROPRIATE REQUIREMENTS (ARARS) 3-1
3.1 Discharge Standards 3-1
3.2 Water Treatment Plant Location Considerations 3-2
3.3 Water Treatment Plant Design 3-2
3.4 Discharge Monitoring Plan 3-2
3.5 Operation and Maintenance 3-3
3.6 Water Treatment Plant Operators 3-3
3.7 Water Treatment Plant Air Emissions 3-3
3.8 City of New Bedford Construction Codes 3-3
3.9 Waterways Regulations 3-3

4.0 TREATABILITY/PILOT STUDIES 4-1
4.1 Foster Wheeler Treatability Studies 4-1
4.1.1 Performance Test of Existing Water Treatment Plant 4-1
4.1.2 Flocculation/Settling/Filtration 4-2
4.1.3 UV/Oxidation 4-3
4.1.4 Carbon Adsorption 4-4
4.2 Foster Wheeler Pilot Scale WTP Testing 4-4
4.2.1 Chemical Addition/Settling 4-6
4.2.2 Sand Filtration 4-6
4.2.3 Tertiary Unit Process 4-6
4.2.4 Heavy Metals Removal 4-7

5.0 PROCESS DESCRIPTION/DESIGN BASIS 5-1
5.1 Dredging/Dewatering/Water Treatment Assumptions 5-1
5.2 Design Flow Rate Development 5-3
5.3 Design Influent Concentrations 5-3
5.4 Treatment Components 5-5
5.4.1 Filtrate Transfer From Mechanical Dewatering System 5-5
5.4.2 Filtrate Equalization Basin (CDF Cell #2) 5-5
5.4.3 Clarifier Feed Pumps (P-101 A/B/C) 5-5
5.4.4 Flowmetering (FE-101) 5-6
5.4.5 Clarifier System (CL-101) 5-6
5.4.6 Filtration Equalization Basin (CDF Cell #3) 5-8
5.4.7 Filtration Feed Pumps (P-301 A/B/C) 5-9
5.4.8 Flowmetering (FE-301) 5-9
5.4.9 Sand Filtration System (SF-301/302) 5-9
5.4.10 Polishing Filtration System (PF-401/402) 5-10

5.4.11 Granular Activated Carbon Adsorption System (LC-501/502/503) 5-11
5.4.12 Sump Pumps (P-601 A/B) 5-11
5.4.13 Water Treatment System Discharge 5-12
5.4.14 Monitoring Requirements 5-12
5.5 Modification to Existing Water Treatment Plant 5-12
5.6 New Water Treatment Building 5-13
5.6.1 Building Foundation System 5-13
5.6.2 Pre-Engineered Metal Building 5-13
5.6.3 Utilities 5-14
5.6.4 Site Grading and Access 5-14
5.6.5 Plumbing 5-15
5.6.6 HVAC 5-15
5.6.7 Electric Power and Lighting 5-15
5.6.8 Fire Protection 5-16
5.6.9 Effluent Discharge Piping 5-16
5.6.10 Clarifier Slurry Discharge Piping 5-16

6.0 PROCESS CONTROL SYSTEM 6-1
6.1 Description of the Control System Architecture 6-1
6.2 Graphic Screens 6-2
6.3 Alarm and Event System 6-2
6.4 Data Logging and Report 6-2
6.5 Motor Control 6-2
6.6 Process Instrumentation and Controls 6-3
6.6.1 Clarifier Feed Pumps (P-101 A/B/C) 6-3
6.6.2 Inclined Plate Clarifier (CL-101) 6-3
6.6.2.1 Alum Transfer Pump (DP-201) 6-3
6.6.2.2 Alum Recirculation Pump (DP-202) 6-3
6.6.2.3 Alum Addition Metering Pumps (MP-201 A/B) 6-4
6.6.2.4 Polymer Addition Metering Pumps (MP-202 A/B) 6-4
6.6.2.5 Flash Mix Tank Mixer (MX-101) 6-4
6.6.2.6 Slow Mix Tank Mixer (MX-102) 6-4
6.6.2.7 Clarifier Slurry Transfer Pump (DP-101) 6-4
6.6.2.8 Slurry Recycle Pump (DP-102) 6-5
6.6.2.9 Slurry Transfer Pump (DP-103) 6-5
6.6.2.10 Algaecide Metering Pump (MP-203) 6-5
6.6.3 Filtration Feed Pumps (P-301 A/B/C) 6-5
6.6.4 Sand Filtration System (SF-301/302) 6-5
6.6.5 Polishing Filtration System (PF-401/402) 6-6
6.6.6 Granular Activated Carbon Adsorption System (LC-501/502/503) 6-6
6.6.7 Auxiliary System Components 6-6
6.6.7.1 Flow Measurement and Control 6-6
6.6.7.2 Turbidity Measurement and Control 6-6
6.6.7.3 Sump Pumps (P-601 A/B) 6-7
6.6.7.4 Compressed Air System (AC-701) 6-7
6.7 Summary of Water Treatment System Alarms 6-7
6.8 Summary of Water Treatment System Interlocks 6-8

7.0 PROJECT SCHEDULE 7-1

8.0 TECHNICAL SPECIFICATIONS AND DESIGN DRAWINGS 8-1

TABLE OF CONTENTS – *Continued*

9.0 ACQUISITION STRATEGY 9-1

10.0 REFERENCES 10-1

LIST OF FIGURES

Figure 1-1 New Bedford Harbor Superfund Site 1-2
Figure 1-2 Approximate Locations of Areas to be Dredged 1-3
Figure 1-3 Site Location Map of Dewatering Facility and Water Treatment Plant 1-4
Figure 2-1 Existing Water Treatment Plant Process Flow Diagram 2-2
Figure 2-2 Existing Site Layout 2-3
Figure 4-1 Pilot Scale Water Treatment System Layout 4-5
Figure 5-1 Process Flow Diagram and Mass Balance 5-4

LIST OF TABLES

Table 2-1 OU #2 (Hot Spot) Discharge Standards 2-1
Table 2-2 Average Sediment Contaminant Concentrations – OU #1 and OU #2 2-4
Table 2-3 OU #1 Monthly Average Water Discharge Standards 2-4
Table 3-1 Monthly Average Water Discharge Standards 3-1
Table 4-1 Sediment Chemical Characteristics 4-2
Table 4-2 Anticipated Tertiary Unit Process Influent Contaminant Concentrations 4-3
Table 4-3 Summary of Pilot Scale WTP Results: Average PCB and Copper Concentrations 4-6
Table 5-1 Dredge, Dewatering, and Water Treatment Assumptions 5-3
Table 5-2 Design Criteria – Clarifier Feed Pumps (P-101 A/B/C) 5-6
Table 5-3 Design Criteria – Clarifier System 5-7
Table 5-4 Design Criteria – Chemical Feed Systems 5-8
Table 5-5 Design Criteria – Filtration Feed Pumps (P-301 A/B/C) 5-9
Table 5-6 Design Criteria – Filtration Systems 5-10
Table 5-7 Design Criteria – Liquid-Phase Carbon Adsorption Vessels (LC-501/502/503) 5-11
Table 5-8 Design Criteria – Sump Pumps (P-601 A/B) 5-12
Table 8-1 List of Technical Specifications 8-1
Table 8-2 List of Design Drawings 8-4
Table 9-1 Water Treatment Facility Work Packages 9-1

LIST OF APPENDICES

Appendix A Summary of USACE/ERM Treatability Study Results
Appendix B Water Treatment Plant Effluent Data OU #2 (April 1994 to September 1995)
Appendix C Foster Wheeler Environmental Corporation Treatability Studies/Pilot Tests
Appendix D Design Calculations
Appendix E Technical Data for Proposed Equipment
Appendix F Technical Specifications
Appendix G Cost Estimate
Appendix H Project Schedule
Appendix I Submittal Register

ABBREVIATIONS AND ACRONYMS

alum	aluminum sulfate
ARARs	Applicable or Relevant and Appropriate Requirements
AWQC	Ambient Water Quality Criteria
BACT	Best Available Control Technology
BD/DA	Basis of Design/Design Analysis
Calgon	Calgon Carbon Corporation
CDF	confined disposal facility
CERCLA	Comprehensive Environmental Response, Compensation and Liability Act
DDA	Debris Disposal Area
ECP	equipment-specific control panel
EFS	Engineering Feasibility Study
ERM	ERM – New England, Inc.
ESQ	Environmental Compliance, Safety and Health, and Quality Assurance
FEMA	Federal Emergency Management Agency
Foster Wheeler	Foster Wheeler Environmental Corporation
FRP	fiber reinforced plastic
GAC	granular activated carbon
gpm	gallons per minute
HVAC	heating, ventilation, and air conditioning
HDPE	high density polyethylene
HMI	Human Machine Interface
MADEP	Massachusetts Department of Environmental Protection
MCC	Motor Control Center
NTU	Nephelometric Turbidity Unit
O&M	operation and maintenance
OU	Operable Unit
PACS	Professional Analytical and Consulting Services, Inc.
PCBs	polychlorinated biphenyls
P&ID	piping and instrumentation diagram
PLC	Programmable Logic Controller
PE	polyethylene
ppb	parts per billion
ppm	parts per million
PSI	Peroxidation Systems, Inc.
ROD	Record of Decision
SPU	slurry processing unit
TDH	total dynamic head
TERC	Total Environmental Restoration Contract
TMDL	Total Maximum Daily Load
TSCA	Toxic Substances and Control Act
TSS	total suspended solids
USACE	U.S. Army Corps of Engineers
USACE-NED	U.S. Army Corps of Engineers – New England District
USEPA	U.S. Environmental Protection Agency
UV	ultraviolet
VFD	variable frequency drive
WES	Waterways Experiment Station
WTP	water treatment plant

1.0 INTRODUCTION

Under Task Order No. 17 of the U.S. Army Corps of Engineers (USACE) Total Environmental Restoration Contract (TERC) No. DACW33-94-D-0002, Foster Wheeler Environmental Corporation (Foster Wheeler) has developed a design for the water treatment system associated with the dredging activities for Operable Unit #1 (OU #1) of the New Bedford Harbor Superfund Site located in New Bedford, Massachusetts. This Basis of Design/Design Analysis (BD/DA) Report documents the design development. The BD/DA is based on information obtained during the water treatment bench scale studies, treatability studies, and pilot scale studies as well as the pre-design dredge tests. Each of these studies/tests is discussed in more detail in Section 4.0 of this report.

The decision was made to design the water treatment plant (WTP) before the Desanding and Dewatering Facilities BD/DA Report and mass balance were started. Therefore, the design capacity for the proposed WTP is based on data and assumptions made prior to developing the mass balance that is presented in the 90% Desanding and Dewatering BD/DA Report. Although the WTP and Desanding/Dewatering Facilities BD/DA Reports do not present identical mass balances, the mass balance and design capacity included in this document is appropriate for WTP design. The design flows of 700 to 2,000 gpm provide the ability for the WTP to respond to variation in actual dredge production rates, changes in filtrate flow rates from dewatering operations, and fluctuation in filtrate recycled to the dredge.

1.1 Site History

The New Bedford Harbor Superfund Site (the Site), located in Bristol County, Massachusetts, extends from the shallow northern reaches of the Acushnet River estuary south through the commercial port of New Bedford Harbor and into 17,000 adjacent acres of Buzzards Bay (Figure 1-1). Industrial and urban development surrounding the harbor has resulted in sediments becoming contaminated with high concentrations of many pollutants, notably polychlorinated biphenyls (PCBs) and heavy metals, with contaminant gradients decreasing from north to south. From the 1940s into the 1970s, two electrical capacitor manufacturing facilities, one located near the northern boundary of the site and one located just south of the New Bedford Harbor hurricane barrier, discharged PCB wastes either directly into the harbor or indirectly via discharges to the city's sewerage system.

The New Bedford Harbor Site has been divided into three operable units, or phases of site cleanup: the Hot Spot OU #2, the upper and lower harbor OU #1, and the Buzzards Bay or Outer Harbor OU #3. This report provides the design basis for the water treatment system for OU #1.

1.2 Upper and Lower Harbor Cleanup Remedy

Approximately 450,000 cubic yards (yd^3) of PCB-contaminated sediment spread over about 170 acres will be dredged from the upper and lower harbor. In the upper harbor, north of Coggeshall Street, sediments having PCB concentrations above 10 mg/kg (parts per million [ppm]) will be dredged, while in the lower harbor and in the salt marshes, sediments having PCB concentrations above 50 ppm will be dredged. Inter-tidal sediments in specific areas adjacent to homes or in areas prone to beach combing will be removed if PCB levels are above 1 and 25 ppm, respectively. The approximate locations of the areas to be dredged are shown on Figure 1-2.

The dredged sediments will be mechanically dewatered and then transported to an off-site disposal facility. Seawater separated from these sediments will be treated before discharge back to the harbor. The proposed WTP will be located adjacent to the existing WTP and will consist of a series of physical and chemical processes to remove suspended solids and the heavy metals and PCBs associated with them. Figure 1-3 shows the locations of the proposed dewatering facility and WTP.

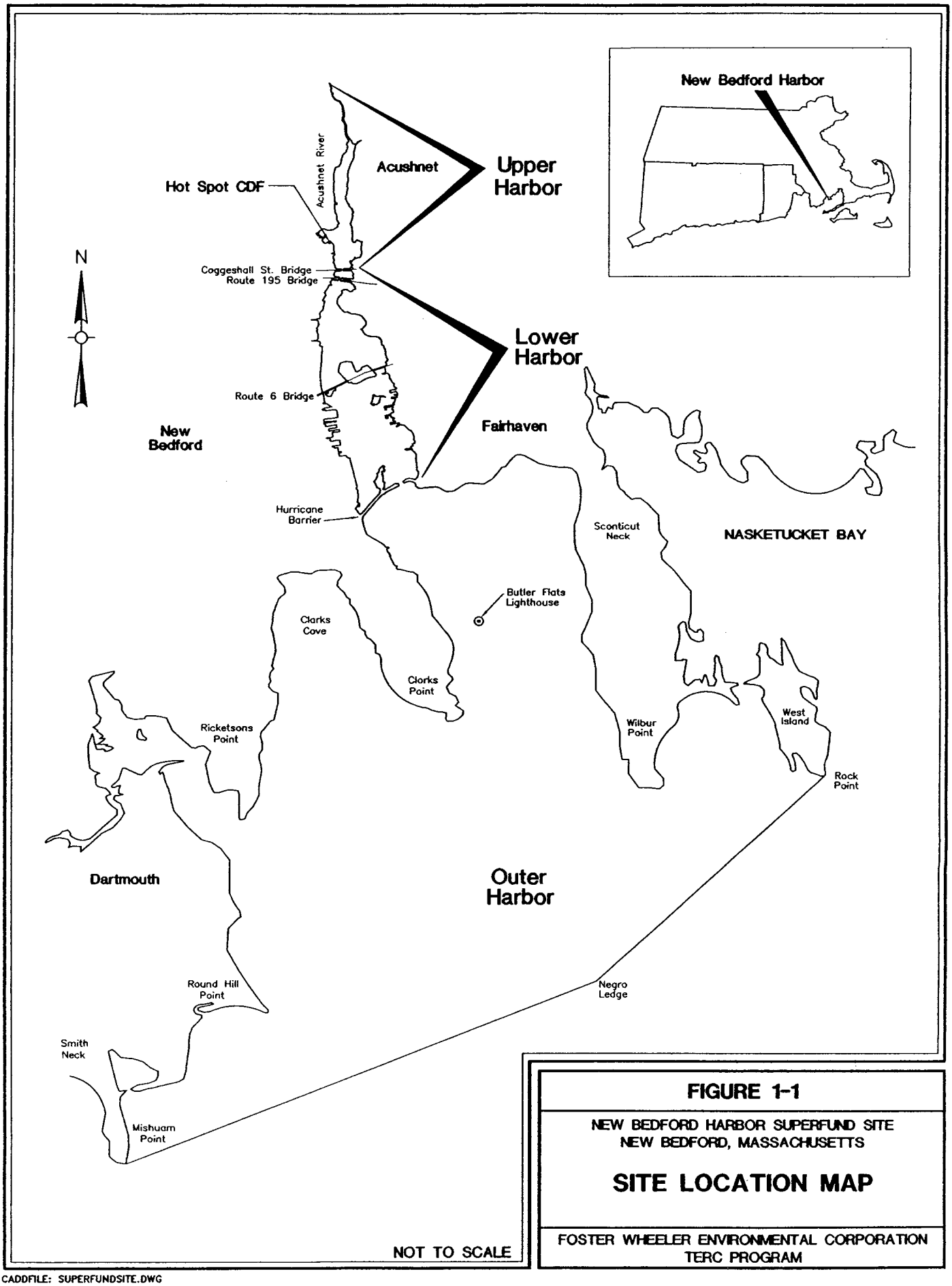

FIGURE 1-1

NEW BEDFORD HARBOR SUPERFUND SITE
NEW BEDFORD, MASSACHUSETTS

SITE LOCATION MAP

FOSTER WHEELER ENVIRONMENTAL CORPORATION
TERC PROGRAM

CADDFILE: SUPERFUNDSITE.DWG

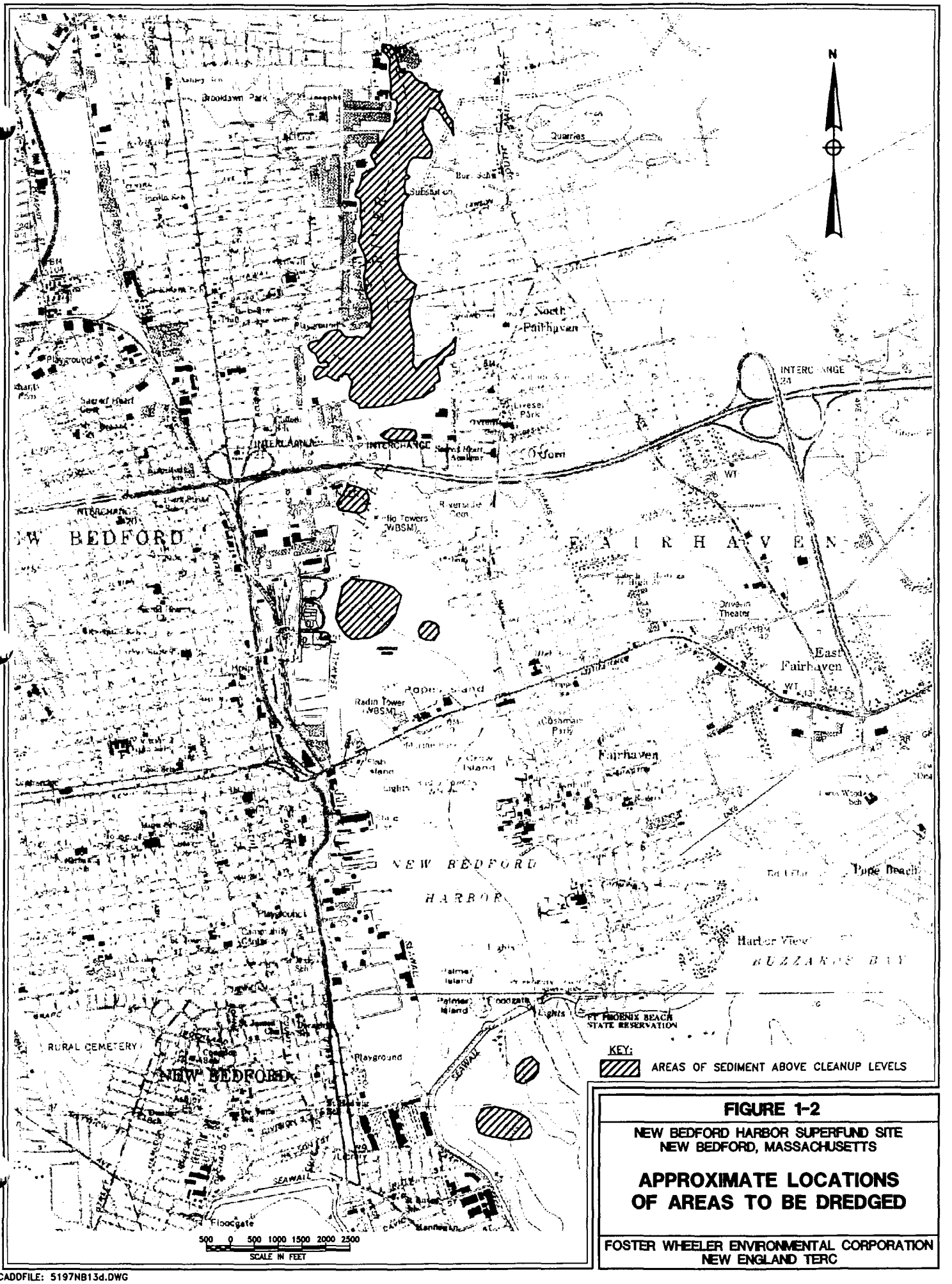

FIGURE 1-2

NEW BEDFORD HARBOR SUPERFUND SITE
NEW BEDFORD, MASSACHUSETTS

APPROXIMATE LOCATIONS OF AREAS TO BE DREDGED

FOSTER WHEELER ENVIRONMENTAL CORPORATION
NEW ENGLAND TERC

CADDFILE: 5197NB13d.DWG

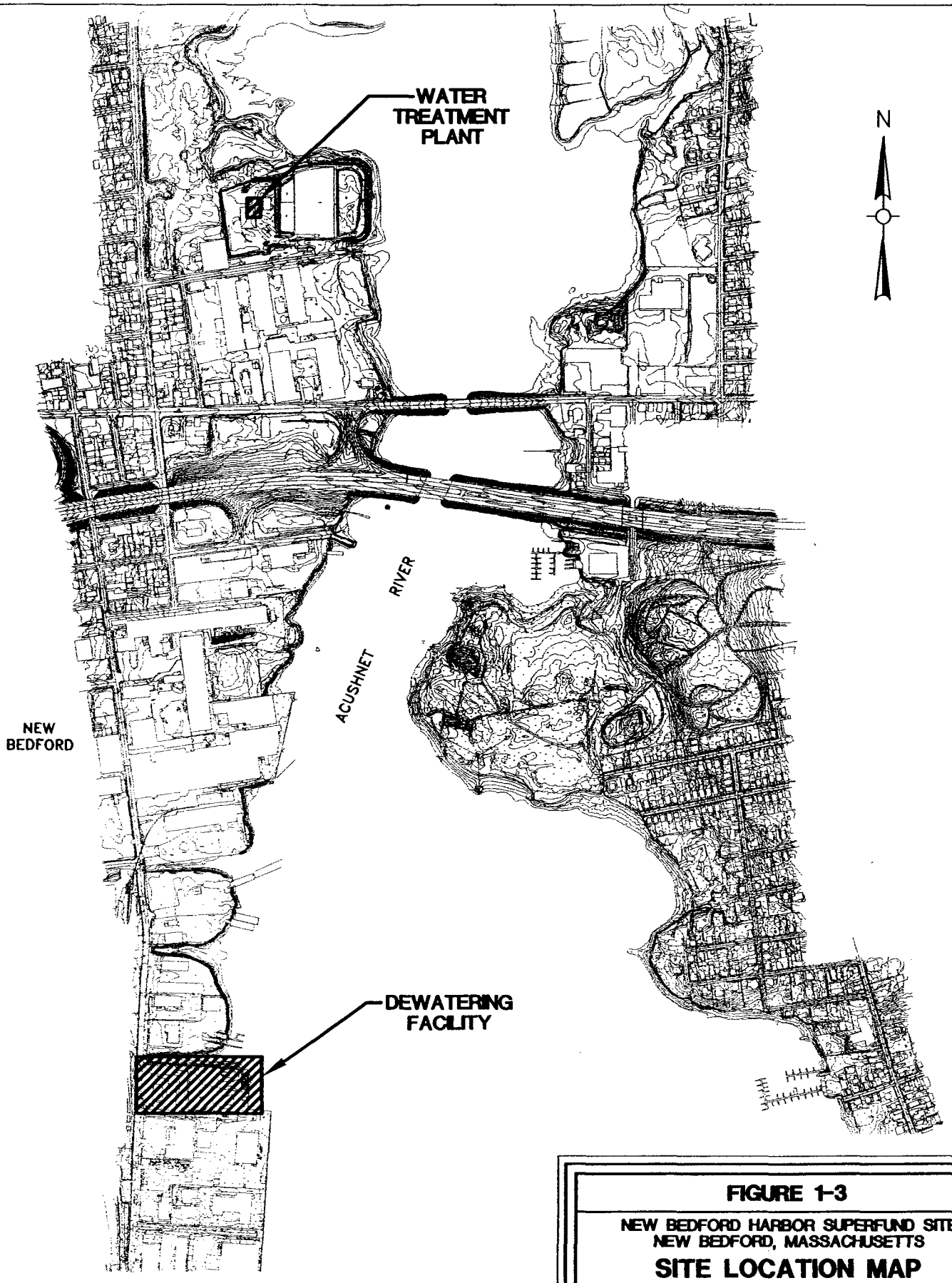

FIGURE 1-3

NEW BEDFORD HARBOR SUPERFUND SITE
NEW BEDFORD, MASSACHUSETTS

SITE LOCATION MAP OF DEWATERING FACILITY AND WATER TREATMENT PLANT

FOSTER WHEELER ENVIRONMENTAL CORPORATION
TERC PROGRAM

CADDFILE: 5197NB15d.DWG

1.3 Water Treatment System Design Objectives

The design objectives for the OU #1 water treatment system were developed based on input from the U.S. Environmental Protection Agency (USEPA), the U.S. Army Corps of Engineers – New England District (USACE-NED), the Massachusetts Department of Environmental Protection (MADEP), and the pre-design test results. The design objectives can be categorized into three groups as presented below:

Location Objectives

- Locate the water treatment system central to the dredging operations in order to minimize the number of treatment facilities required.
- Minimize construction and operational costs associated with treating the filtrate generated by the sediment dewatering operations.
- Maximize the use of the existing water storage capacity at the Sawyer Street site (i.e., CDF Cells #1, #2, and #3).

Hydraulic Objectives

- Provide for potential flow rate expansion from 700 gallons per minute (gpm) to 2,000 gpm.
- Operate the water treatment system 24 hours per day, 7 days per week.
- Use floating and/or submerged pipe to convey filtrate from the dewatering facility to the water treatment system in order to minimize property easements and construction costs.

Discharge Objectives

- Reduce the total suspended solids (TSS) and contaminant concentrations of the filtrate such that the discharge standards for PCBs, cadmium, chromium, copper, and lead are achieved.

1.4 Organization of the Report

The document is organized such that this section, Section 1.0, summarizes the background information and presents the design objectives and report organization; Section 2.0 presents an overview of the water treatment facility design and operation; Section 3.0 summarizes the Applicable or Relevant and Appropriate Requirements (ARARs); Section 4.0 summarizes the results and conclusions of the treatability/pilot studies conducted by Foster Wheeler; Section 5.0 summarizes the design basis for the water treatment system; and Section 6.0 provides a description of the process control system. The project schedule, lists of technical specifications and design drawings, and acquisition strategy are presented in Sections 7.0, 8.0, and 9.0, respectively. References are provided in Section 10.0. Appendices A through E contain a summary of the treatability studies conducted by the USACE and ERM – New England, Inc. (ERM), the WTP effluent data for OU #2, the results of the 1999 performance tests conducted by Foster Wheeler, and a more detailed presentation of the technical data and backup calculations to support key information presented in the main body of the report. Appendix F contains the technical specifications, Appendix G presents the cost estimate, Appendix H provides the project schedule, and Appendix I provides the submittal register.

2.0 WATER TREATMENT SYSTEM DESIGN OVERVIEW

The following sections provide an overview of the existing water treatment facility design and operation, and explain the discharge standard development for the future water treatment facility.

2.1 Existing Water Treatment Plant

In October 1990, ERM was contracted by the USACE to prepare a design for a water treatment facility for the New Bedford Harbor Superfund Site. The purpose of the water treatment facility was to treat water generated during the dredging of the sediments for the Hot Spot OU #2. The Hot Spot sediments contained PCB concentrations in excess of 4,000 mg/kg. Detailed data on the characteristics of this sediment can be found in the *Draft Final Hot Spot Feasibility Study* (Ebasco, July 1989) and the amended Record of Decision (ROD) for OU #2 (USEPA, April 1999).

The design and discharge requirements were based on treatability studies (Appendix A of ERM's *Final Design Analysis for New Bedford Harbor/Hot Spot Operable Unit Superfund Site*, November 1991) conducted by ERM with site-specific sediment and seawater. Based on these treatability studies, it was determined that the most effective removal of PCBs and heavy metals would be obtained when the Hot Spot dredge water was treated by the following processes:

1. Settling the dredged solids in a CDF
2. Equalizing the water generated from the CDF
3. Flocculation of the suspended solids using aluminum sulfate (alum)
4. Secondary settling of the water
5. Filtration using a sand filter and a cartridge polishing filter
6. Ultraviolet (UV)/oxidation with hydrogen peroxide

Using the results of the ERM treatability studies, ERM's effluent calculations, and the USEPA's estimates of variability, the USEPA established applicable discharge standards that are presented in Table 2-1. All the data and calculations supporting the development of these discharge standards can be found in Appendix E of ERM's *Final Design Analysis for New Bedford Harbor/Hot Spot Operable Unit Superfund Site* (ERM, November 1991).

Table 2-1
OU #2 (Hot Spot) Water Discharge Standards

Contaminant	Monthly Average (µg/l)	Daily Maximum (µg/l)
PCBs	0.71	1.3
Cadmium	6.0	10.7
Chromium	7.1	12.8
Copper	8.3	15
Lead	4.8	8.5

Based on ERM's design, the existing WTP was constructed in 1994 and operated continuously from April 1994 to September 1995. During the 17 months of operation, the WTP consistently met the monthly average standards for PCBs and heavy metals. However, there were several daily exceedances for copper. The Process Flow Diagram and Site Layout for the existing WTP (as designed) are provided on Figures 2-1 and 2-2, respectively. A more detailed discussion of the WTP design and operations for OU #2 are provided in ERM's Final Design Analysis Report (November 1991) and Appendix B, respectively.

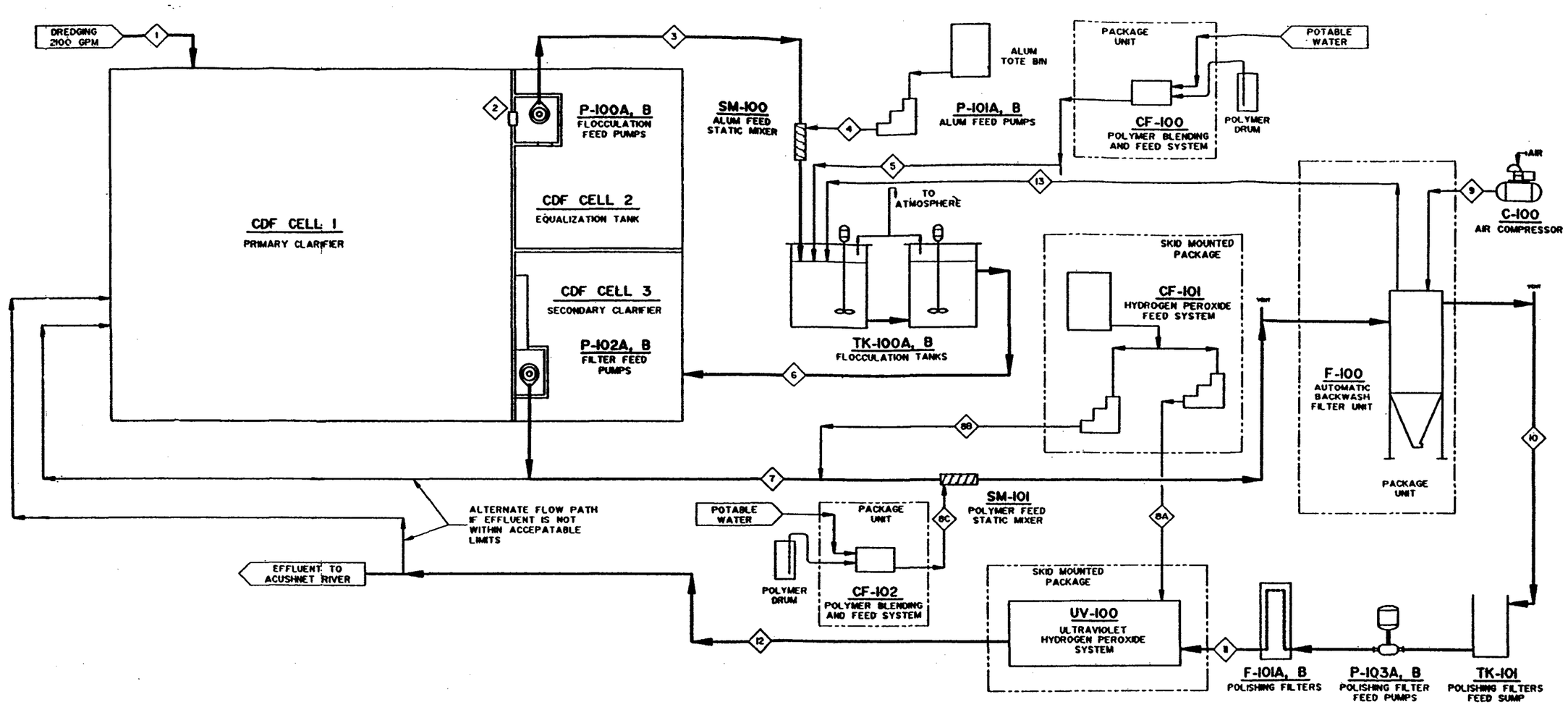

FIGURE 2-1

NEW BEDFORD HARBOR SUPERFUND SITE
NEW BEDFORD, MASSACHUSETTS

EXISTING WTP PROCESS FLOW DIAGRAM

NOT TO SCALE

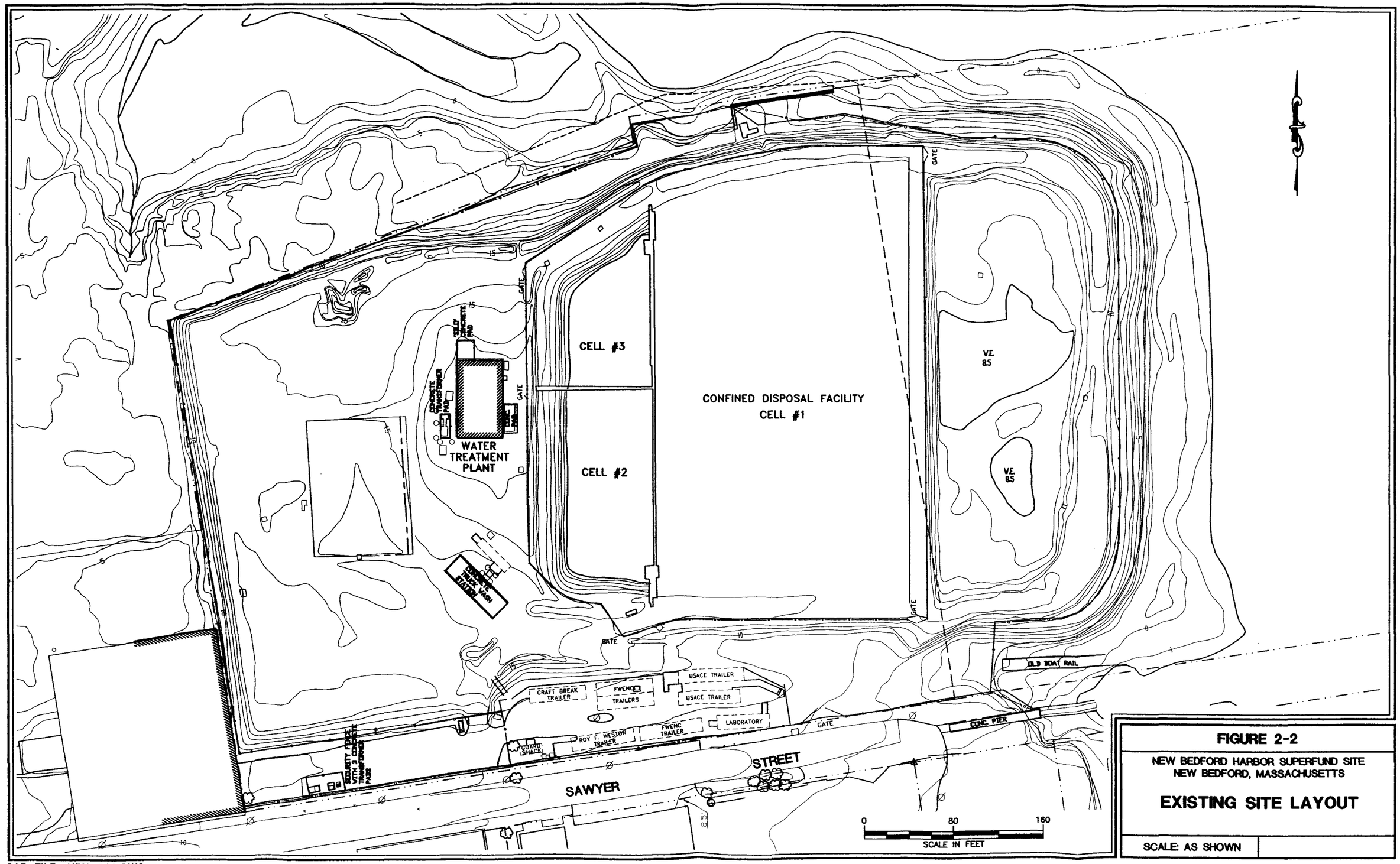

FIGURE 2-2

NEW BEDFORD HARBOR SUPERFUND SITE
NEW BEDFORD, MASSACHUSETTS

EXISTING SITE LAYOUT

SCALE: AS SHOWN

CAD FILE: NBH_016.DWG

2.2 Future OU #1 Water Treatment Plant

The average concentration of PCBs in the sediments to be dredged for OU #1 is expected to be 400 to 500 ppm (Table 2-2). Therefore, based on the effluent data generated during the WTP operations for OU #2, and the fact that the PCB concentrations in the OU #1 sediments will be at least one order of magnitude less than the Hot Spot sediments, the USEPA established new discharge standards for OU #1 (Table 2-3). In addition, since the physical characteristics of the harbor sediments are anticipated to be relatively uniform, the USEPA determined that the existing treatment processes (i.e., settling, flocculation, filtration, and UV/oxidation) would be effective in meeting the new monthly discharge standards for both PCBs and heavy metals (total cadmium, chromium, copper, and lead). Therefore, the USEPA indicated that a traditional metal treatment system (i.e., pH adjustment) would not be required.

Table 2-2
Average Sediment Contaminant Concentrations – OU #1 and OU #2

Contaminant	OU #1 (mg/kg)	OU #2 (mg/kg)
PCBs	400-500	20,000-30,000
Cadmium	16	15.1
Chromium	580	330
Copper	1,400	762
Lead	490	600

Note: More detailed sediment characterization data can be found in the Record of Decision for each operable unit.

Table 2-3
OU #1 Monthly Average Water Discharge Standards

Contaminant	Discharge Standard (μg/l)
PCBs	0.065 per Aroclor
Cadmium	9.3
Chromium	50
Copper	5.6
Lead	8.5

However, in order to confirm the effectiveness of the existing water treatment system, Foster Wheeler performed several new pre-design treatability/pilot studies using representative sediment from OU #1. These treatability tests included settling tests, jar tests (flocculation), UV/oxidation bench scale design tests, influent characterization tests, carbon adsorption bench scale design tests, and pilot water treatment tests. In addition, as a worst case scenario, performance tests were conducted using the existing WTP and supernatant associated with the Hot Spot sediments contained within CDF Cell #1. A more detailed discussion of the Foster Wheeler treatability tests is provided in Section 4.0. The results of the treatability/pilot studies, as well as available historical data, were used to develop the treatment process for OU #1, which is presented in Section 5.0 of this report.

3.0 APPLICABLE OR RELEVANT AND APPROPRIATE REQUIREMENTS (ARARS)

Dredged sediments will be pumped to sand separation and mechanical dewatering systems and the resultant filtrate will be pumped to the water treatment facility. The filtrate is anticipated to be contaminated with PCBs and heavy metals which (per the ROD) must be treated to meet Federal Ambient Water Quality Criteria (AWQC) and State of Massachusetts Surface Water Quality Standards for PCBs, copper, lead, chromium, and cadmium prior to discharge to New Bedford Harbor.

Since the treatment facility is considered to be "on-site," permits are not required to operate the facilities or to discharge the treated effluent. However, the WTP construction will comply with State and local building codes, and the treatment facility will comply with the substantive Massachusetts requirements for treatment plant operations, including not allowing waste to bypass the system, having alarm systems in place, and performing proper maintenance.

3.1 Discharge Standards

New Bedford Harbor is classified as a SB coastal water. Discharges to the harbor are required to meet Federal AWQC and State of Massachusetts Surface Water Quality Standards for SB waters. The USEPA Regional Administrator, under Section 121(d)(4)(B) of the Comprehensive Environmental Response, Compensation and Liability Act (CERCLA), has waived the requirements of 40 CFR 122.4(I) of the Clean Water Act to allow the discharge of treated supernatant into a water body (New Bedford Harbor), which does not meet the AWQC for PCBs and copper. As per the ROD, it is anticipated that the treated filtrate will meet existing AWQC for cadmium, chromium, and lead. The AWQC for PCBs (0.03 μg/l) and the AWQC for copper (2.9 μg/l) will ultimately be met through a phased Total Maximum Daily Load (TMDL) approach. A more detailed description of the TMDL approach is presented in the ROD for OU #1.

State surface water discharge regulations 314 CMR 3.10(4) require that the dewatering and treatment of dredged sediments must meet the Best Available Control Technology (BACT). The water discharged from the treatment facility must be treated using the BACT to approach, as closely as possible, the monthly average discharge standards presented in Table 3-1. The monthly average discharge standards for OU #2 (Hot Spot sediment) are also presented in Table 3-1 for comparison purposes.

Table 3-1
Monthly Average Water Discharge Standards

Contaminant	OU #1 Discharge Standard (μg/l)	OU #2 Discharge Standard (μg/l)
PCBs	0.065 per Aroclor[1]	0.71 μg/l (total)
Cadmium	9.3[2]	6.0
Chromium	50[2]	7.1
Copper	5.6[1]	8.3
Lead	8.5[2]	4.8

Notes: [1] TMDL limit
[2] Ambient water quality criteria

3.2 Water Treatment Plant Location Considerations

The existing water treatment facility is located in a pre-fabricated building and any additional equipment housing will be constructed directly adjacent to the existing facility. The facilities will be at least 100 yards from the shoreline and within the coastal zone area as defined by CZM (301 CMR 21.00). The treatment facilities will be located outside of the 100-foot coastal wetlands/riverfront area buffer zone as defined by 310 CMR 10.02(a) and 310 CMR 10.58(2)(a). The Coastal Storm Flowage Resource Area is defined in 310 CMR 12.02 and 310 CMR 10.02(l)(d) as "the land between mean low water and the landward boundary of the 100 year flood". Based on the Federal Emergency Management Agency (FEMA) flood map for the New Bedford area, it appears that the treatment plant located at Sawyer Street is within the Coastal Storm Flowage Resource Area. Therefore, the design of the new treatment building must incorporate erosion and sedimentation controls, stormwater management controls, Best Management Practices for implementation during construction to prevent off-site impacts to the resource area, and spill control for the completed facility (i.e., curbed building).

3.3 Water Treatment Plant Design

Since the treatment facilities will be located greater than 100 feet from the Coastal Wetland resource areas, and greater than 25 feet from the Riverfront Area, plant construction is not directly under the jurisdiction of the New Bedford Conservation Commission. The Riverfront Area, measured horizontally from, and parallel to, the river's mean annual high-water line, is 25 feet in New Bedford.

Based upon the pre-design bench and pilot scale treatability study data, it is anticipated that the treatment system will meet the discharge requirements for both PCBs and heavy metals. The treatment process will consist of chemical addition, clarification, secondary settling and filtration, followed by carbon adsorption for organic constituent removal. The treatment system will be designed for an initial flow rate of 700 gpm with the capabilities to expand to a maximum flow rate of 2,000 gpm (see Section 5.2 for design flow rate development). The filtrate will be pumped from the mechanical dewatering system to the treatment facilities, and the treated effluent will be discharged to New Bedford Harbor.

3.4 Discharge Monitoring Plan

A discharge monitoring plan will be developed and implemented for the site in accordance with Massachusetts' requirements for discharges to surface waters (314 CMR 3.00-4.00). The discharge monitoring plan will be based upon the plan used for the Hot Spot Dredging Project (OU #2). Since the treatment is a continuous flow process, effluent sampling will be conducted as the effluent is discharged. Refrigerated automatic composite samplers will be used to obtain 24-hour composite samples from each process train. Sampling and analysis will be performed in accordance with 40 CFR 136, and a detailed Sampling and Analysis Plan (SAP) addendum will be developed as part of both the Startup Plan and Operations and Maintenance (O&M) Manual. Monthly discharge monitoring reports will be submitted to the USEPA Project Manager, the USACE Project Manager, the USACE Resident Engineer, and the MADEP Project Manager.

Any exceedance of the discharge standards will be immediately reported by the Foster Wheeler Project Manager to the USEPA Project Manager, the USACE Project Manager, the USACE Resident Engineer, and the Foster Wheeler Regional Environmental Compliance, Safety and Health, and Quality Assurance (ESQ) Manager.

3.5 Operation and Maintenance

Although not regulated as "treatment works", the water treatment facilities will be properly operated and maintained to meet the substantive, relevant, and appropriate requirements of Massachusetts regulations for Operation and Maintenance of Wastewater Treatment Works (314 CMR 12.03, 12.06, 12.08, and 12.10-12). The treatment facility design will not allow untreated water to bypass the treatment system and will have an alarm system in-place. The treatment facility will be equipped with adequate tools, spare parts, equipment, and personnel to ensure safe and proper operation. Discharge activities will be immediately suspended if the facility fails to operate properly or if analytical reports indicate that any of the discharge limits have been exceeded.

3.6 Water Treatment Plant Operators

Personnel operating the water treatment facilities are not required to possess a current Industrial Wastewater Treatment Operators License from the Massachusetts Board of Registration of Operators of Wastewater Treatment Facilities because the plants are not considered to be "treatment works". Operators must have the education and skill necessary to operate and maintain the treatment facility in accordance with the substantive, relevant, and appropriate requirements of Massachusetts regulations. During preparation of the O&M Manual prior to startup of the WTP, Foster Wheeler will identify the necessary requirements and develop job descriptions that will provide for the selection of qualified operators.

3.7 Water Treatment Plant Air Emissions

The intended WTP design does not include any point source air discharges. The plant will not be subject to any air permitting substantive requirements because the potential air emissions from the water treatment facility will: (1) be less than one ton per year of any criteria air contaminant; and (2) be less than one ton per year for the sum of all non-criteria air contaminants.

3.8 City of New Bedford Construction Codes

The city of New Bedford required building, water, and electrical permits for the existing WTP, and similar permits will be taken out for any future construction. The city also issued a Certificate of Occupancy for the existing building. The appropriate city officials will be consulted prior to beginning construction of the new WTP. All design drawings will be stamped by a Massachusetts Registered Professional Engineer. Massachusetts licensed plumbers and electricians will be used for all plumbing and electrical work and utility connections.

3.9 Waterways Regulations

Construction and operation of the treatment facilities are subject to Massachusetts Waterway regulations (310 CMR 9.00) because the facilities are located on filled tidelands. Construction of the plant(s) will not result in the placement of structures or fill material in the waterway or within the 100 foot coastal wetland resource area buffer zone extending from the riverfront, or interfere with public rights of navigation or water-dependent uses as defined by the regulations. Construction and operation of the treatment facilities will not interfere with public access to the water because alternative access is available. Discharge of the treated effluent is regulated by the Clean Water Act (40 CFR 122) and Massachusetts Surface Water Quality Standards (314 CMR 4.00).

4.0 TREATABILITY/PILOT STUDIES

This section presents a summary of the treatability/pilot test work completed by Foster Wheeler with representative sediment for OU #1 to support the design of the future water treatment system. Each of the treatability studies/pilot tests built upon the data generated by the previous studies, including the treatability studies/operational data developed by the USACE and ERM for OU #2. The USACE/ERM treatability and operational data is summarized in Appendices A and B, respectively.

4.1 Foster Wheeler Treatability Studies

Foster Wheeler conducted two separate pre-design treatability studies (Phase I and II) with sediments representative of OU #1. The objectives of these treatability studies were to:

Phase I

1. Estimate the expected influent concentration for the WTP during OU #1;
2. Evaluate if the existing treatment process is capable of meeting the new discharge standards based on the expected influent concentrations; and
3. Estimate the achievable effluent concentrations for PCBs and metals using the existing treatment process.

Phase II

1. Confirm the expected influent concentrations of PCBs and metals including performance of at least one round of treatability testing using highly contaminated (≥500 mg/kg PCBs) sediment;
2. Develop a relationship between alum dosage and TSS/turbidity;
3. Evaluate the effects of polymer addition;
4. Estimate the characteristics and production rate of clarification solids; and
5. Evaluate the feasibility of activated carbon as an alternative to UV/oxidation.

These objectives were achieved through settling tests, jar tests, filtration tests, bench scale UV/oxidation testing, bench scale granular activated carbon (GAC) testing, and bench scale gravity settling testing. A summary of each of these treatability tests, along with results of several performance tests conducted on the existing WTP with supernatant from the Hot Spot sediments, are presented in the following sections.

4.1.1 Performance Test of Existing Water Treatment Plant

In April and May 1999, several performance tests were conducted on the existing WTP using water removed from CDF Cell #1 (OU #2). The purpose of these tests was to determine if the existing treatment system would be capable of treating the water removed from the Hot Spot sediments to the new monthly average discharge limits established for OU #1 (Table 3-1). The results of this testing represented a worst case scenario since the PCB concentrations in the sediments of OU #1 are expected to be at least an order of magnitude less than OU #2. The performance tests evaluated the effectiveness of the treatment plant as designed, as well as without the flocculation step. The results of these performance tests are presented in Appendix C.

The analytical results indicate that the existing system is not capable of reducing the total PCB concentration of the water associated with the Hot Spot sediment to below the monthly average concentration of 0.065 µg/l (parts per billion [ppb]) per Aroclor. Due to the presence of fine suspended particles within the process water, the UV/oxidation system was only able to achieve a PCB concentration of approximately 0.5 µg/l per Aroclor tested with the water removed from CDF Cell #1. However, it should be noted that the water associated with the Hot Spot sediment was anticipated to be significantly different from the water that will be generated during OU #1 dredging activities. The Hot Spot sediments contained PCB concentrations ranging from 2,308 to 6,167 ppm (based on analytical results of sediments contained in CDF Cell #1), while the OU #1 sediment will average less than 500 ppm. In addition, the Hot Spot sediments were stored in CDF Cell #1 for over 4 years, and the physical characteristics changed due to bioactivity and flushing with precipitation.

4.1.2 Flocculation/Settling/Filtration

Sediment samples considered representative of OU #1 were collected from two different areas of the upper estuary. The chemical characteristics of each are provided in Table 4-1. In order to simulate the dredging and initial settling portions of the remedial action, each of the sediment samples was mixed in a 5% (by weight) slurry and allowed to settle for approximately 18 hours. Following this initial settling, samples of the supernatant were collected for various jar tests.

Table 4-1
Sediment Chemical Characteristics
Foster Wheeler Phase I/II Treatability Studies

Parameter	Sediment Sample B[1]	Sediment Sample C[2]
% Solids	36.7	38.8
Cadmium, total (mg/kg)	16	17
Chromium, total (mg/kg)	580	670
Copper, total (mg/kg)	1,400	1,500
Lead, total (mg/kg)	490	450
Aroclor 1016 (mg/kg)	ND	ND
Aroclor 1221 (mg/kg)	ND	ND
Aroclor 1232 (mg/kg)	ND	ND
Aroclor 1242 (mg/kg)	55	59
Aroclor 1248 (mg/kg)	ND	ND
Aroclor 1254 (mg/kg)	31	34
Aroclor 1260 (mg/kg)	5.9	6.0
Total PCBs (mg/kg)	91.9	99

Notes: [1] Collected at a location adjacent to proposed CDF B (N 2703650, E 815341) at a depth of 0 to 2 feet.
[2] Collected at a location adjacent to proposed CDF C (N 2701400, E 815254) at a depth of 0 to 2 feet.
ND = Not detected

The PCB concentration in the decanted supernatant ranged from 25 to 142 µg/l. Effective chemical addition (alum and polymer), settling, and filtration through a 10-micron filter were found to reduce the PCB concentration in the process water to 2.1 µg/l or less. This would represent an influent PCB concentration to either a UV/oxidation or GAC adsorption system. Even if highly contaminated PCB sediments are encountered during the full-scale dredging operations, it is likely that effective suspended solids removal will prevent the influent concentration of PCBs to the tertiary unit process system from

increasing beyond 10 μg/l. A summary of the anticipated contaminant concentrations after chemical addition/clarification and filtration based on the treatability results is presented in Table 4-2.

Table 4-2
Anticipated Tertiary Unit Process Influent Contaminant Concentrations

Parameter	Contaminant
Turbidity (NTU)	6-8
Total Suspended Solids (mg/l)	5
Total PCBs (μg/l)	1.8
Total Cadmium (μg/l)	<5
Total Chromium (μg/l)	<10
Total Copper (μg/l)	17
Total Lead (μg/l)	4

The jar test results (Phase I & II Treatability Studies) indicate that a direct relationship between alum dose and TSS/turbidity could not be developed due to the variability exhibited by the sediment samples. Based on the jar test results, it is anticipated that the required alum dosages will range from 25 mg/l (ppm) to 200 mg/l. Therefore, during full-scale operations, the optimum alum dosages will have to be determined by the plant operator through routine jar testing.

Alum alone produces a fine floc (pin floc) which has poor settling characteristics. Under ideal conditions, the majority of the pin floc settled in 18 to 24 hours. In order to enhance the settling characteristics of the pin floc, the addition of a high molecular weight anionic polymer (AquaPure) was evaluated. The results of the treatability studies indicate that in order to achieve the optimum settling performance, polymer should be added at 2 mg/l after the addition of alum. A brief period of slow mixing (at least 1 minute) will be required to optimize the alum floc formation. The addition of polymer was found to reduce the settling time of the pin floc from hours to minutes.

4.1.3 UV/Oxidation

The existing WTP was able to consistently meet the monthly average discharge limit of 0.71 μg/l total PCBs during the Hot Spot sediment removal action (OU #2). All effluent samples collected from the existing WTP were consistently below the PCB analytical detection limit (0.25 μg/l). However, since the PCB discharge standard for OU #1 is significantly lower at 0.065 μg/l per Aroclor, additional UV/oxidation testing was conducted to determine if the process is capable of meeting the new discharge requirement.

Sediment considered representative of OU #1 was used to produce the water for this UV/oxidation testing. The resultant supernatant was generated using a treatment process which was considered representative of the future WTP. A 5% (by weight) slurry of sediment was mixed in an 85-gallon overpack drum and then allowed to settle for approximately 18 hours. After settling, the supernatant was transferred to a second overpack drum and alum (100 mg/l) was added to flocculate the remaining suspended solids. The flocculated supernatant was then allowed to settle for an additional 24 hours. In order to simulate the water passing through sand/polishing filters, the supernatant was pumped through a 10-micron in-line filter using a peristaltic pump. Approximately 30 gallons of filtered supernatant with a PCB concentration of approximately 1.5 μg/l were then shipped to Calgon Carbon Corporation's (Calgon) UV/oxidation testing facility in Toronto, Canada.

The results from Calgon's report (Appendix B of the Foster Wheeler Phase I Treatability Study) indicate that in order to achieve the PCB discharge limit of 0.065 μg/l (per Aroclor) for a 350 gpm water stream, one (1) 360 kW UV/oxidation unit would be required in addition to the 270 kW unit already on-site. The estimated capital and yearly O&M costs for such a system are $368,000 and $647,600, respectively. The Calgon report also indicates that in order to achieve a total PCB discharge limit of 0.455 μg/l (assume 7 Aroclors are present), the existing 270 kW UV/oxidation unit would be sufficient. The estimated annual O&M cost for this scenario is $326,600.

4.1.4 Carbon Adsorption

Due to the substantial capital and operating costs associated with the UV/oxidation system, the feasibility of a GAC adsorption system was re-evaluated. A representative supernatant sample was generated from a 5% (by weight) slurry which was allowed to settle for 24 hours, dosed with 100 mg/l alum and 2 ppm polymer, and then passed through a 10 μm in-line filter. The resultant supernatant was then sent to Professional Analytical and Consulting Services, Inc. (PACS) for laboratory scale isotherm and mini-column carbon adsorption testing.

The results indicate that activated carbon adsorption is a feasible alternative to UV/oxidation for the reduction of PCB concentrations to below 0.065 μg/l. The isotherm data indicate an adsorptive capacity of 0.08 mg of PCBs per gram of carbon at an equilibrium concentration of 0.9 μg/l. The mini-column adsorption test results indicate that approximately 3,500 gallons of process water can be treated with one pound of activated carbon before breakthrough occurs. This translates into approximately five carbon change-outs (10,000 pounds carbon/change-out) per year based on a flow rate of 350 gpm.

The estimated capital and annual operating costs associated with using carbon adsorption are $117,410 and $39,300, respectively.

4.2 Foster Wheeler Pilot Scale WTP Testing

A pilot scale water treatment system was operated from September 11, 2000 through September 29, 2000 and treated approximately 1 million gallons of water generated during the Pre-Design Field Test of the proposed dredge technology. The treatment system consisted of chemical addition (alum and polymer), an inclined plate clarifier, ultra-fine (>0.45 μm) sand filtration, and GAC adsorption. Portions of the existing WTP were used to conduct the pilot scale tests, and the existing UV/oxidation system was also evaluated using the more aggressive filtration system. The site layout of the pilot scale treatment system is shown on Figure 4-1.

Water samples were collected before and after each of the unit processes. The water samples were analyzed for turbidity, PCBs, and total and dissolved metals (cadmium, copper, chromium, and lead). However, since only PCBs and copper were detected above the discharge limits in the influent stream, only this data is summarized in Table 4-3. The complete data set can be found in Appendix B of the *Draft Wastewater Pilot-Scale Treatment Summary Report* (Foster Wheeler, January 2001).

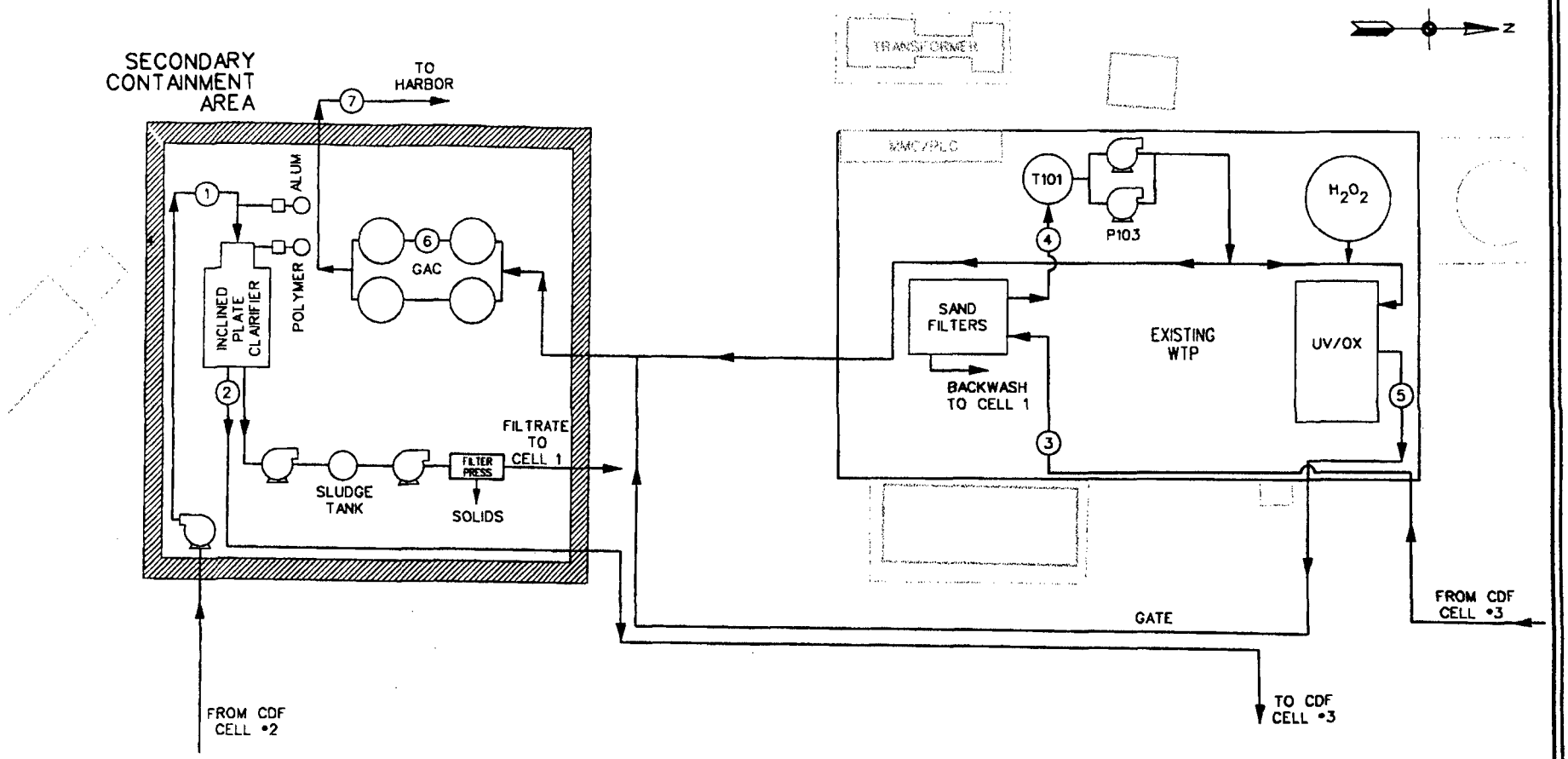

STREAM #	DESCRIPTION
1	CLARIFIER INFLUENT
2	CLARIFIER EFFLUENT
3	SAND FILTER INFLUENT
4	GAC/UV/OXIDATION INFLUENT
5	UV/OXIDATION EFFLUENT
6	GAC MIDPOINT
7	GAC EFFLUENT

10 0 20 40 FEET

SCALE 1"=20'

FIGURE 4-1

NEW BEDFORD HARBOR SUPERFUND SITE
NEW BEDFORD, MASSACHUSETTS

PILOT SCALE WATER TREATMENT SYSTEM LAYOUT

SCALE: NOTED

17ec101f.dgn

Table 4-3
Summary of Pilot Scale WTP Results: Average PCB and Copper Concentrations

Stream #	Description	Turbidity (NTU)	Total PCBs (µg/l)	Dissolved Copper (µg/l)	Total Copper (µg/l)
1	Clarifier Influent	16.15	7.03	10.48	18.64
2	Clarifier Effluent	6.23	6.03	7.37	9.4
3	Sand Filter Influent	1.03	1.26	7.87	8.64
4	Sand Filter Effluent/GAC or UV/Oxidation Influent	0.48	0.94	11.92	14.98
5	UV/Oxidation Effluent	0.5	< 0.065	15.0	17.4
6	GAC Midpoint	-	< 0.065	<3.0	3.79
7	GAC Effluent	0.15	< 0.065	< 3.0	< 3.0

Note: See Figure 4-1 for stream identifications.

Based on the data collected during the pilot scale WTP testing, the following conclusions were made:

4.2.1 Chemical Addition/Settling

An inclined plate clarifier can effectively remove the majority of suspended solids present in the influent stream. The addition of alum and polymer was shown to remove suspended solids present effectively, thus reducing the load to the filtration system and increasing the effectiveness of the tertiary unit process system (GAC adsorption or UV/oxidation). The data indicates that the heavy metals are more closely associated with the larger suspended solids that were removed in the clarifier, and that the PCBs have more affinity to the smaller pin floc particles that settled out in CDF Cell #3.

4.2.2 Sand Filtration

The Vortisand sand filtration system was promoted as being able to remove >0.45 µm particles. However, the test data indicates that due to the colloidal particles present, the sand filters were only about 60% effective in removing these particles. Therefore, while the Vortisand sand filters were effective in removing suspended solids, traditional multi media sand filtration systems (>10 µm) would likely be just as effective. The concentrations of the contaminants within the water stream did not significantly change after passing through the sand filter.

4.2.3 Tertiary Unit Process

Both the GAC adsorption and UV/oxidation systems were shown to be capable of achieving the discharge limit for PCBs during the pilot test. However, it should be noted that the UV/oxidation system was only run at half of its flow capacity and, as a result, the water stream was exposed to twice as much energy for PCB destruction. Historical data indicated that the existing system will not be able to meet the lower discharge limits when operated at its design capacity of 350 gpm. In addition, the UV/oxidation system was not designed for and, as a result, did not remove enough of the dissolved metals present in the water stream. While not selected for that purpose, GAC was also able to remove the dissolved metals such that the effluent stream met all the discharge requirements.

Previous studies have indicated that UV/oxidation can achieve the desired discharge limits if the influent concentration of PCBs does not exceed 2 ppb. Therefore, if the PCB concentration greatly exceeds this level, the removal effectiveness would decrease unless the system is designed to handle a higher PCB concentration. The treatment effectiveness of GAC, on the other hand, is primarily dependent on the adsorption capacity of the carbon. If the concentration of PCBs varies in the influent, it would only result in more carbon being exhausted. While this would affect the O&M economics if the concentration remained above the design PCB concentrations, it would not result in an exceedance of the discharge limit. Therefore, GAC is concluded to be the more effective tertiary unit process.

4.2.4 Heavy Metals Removal

The existing WTP was not designed to remove dissolved heavy metals present in the water stream, and the historic operational data indicates that by removing the majority of the suspended solids, the heavy metals discharge limits could still be met. As a result of the OU #2 operational data, it was determined that the OU #1 WTP would not require a dissolved metal removal system. However, if such a system is required in the future, equipment such as pH adjustment and aeration/oxidation could easily be incorporated if found to be an effective means of reducing the concentration of dissolved metals.

The pilot scale data indicates that the dissolved copper concentrations were above the discharge limit and, as a result, were not removed in the clarification, filtration, and UV/oxidation processes. However, the dissolved metal was removed to below the detection limit in the GAC adsorption system. This likely is a result of the GAC being capable of removing trace amounts of dissolved metals.

5.0 PROCESS DESCRIPTION/DESIGN BASIS

This section provides a description of the OU #1 water treatment system. Section 5.1 provides the dredging, sediment dewatering, and water treatment assumptions used for the water treatment system design. Section 5.2 discusses the water treatment system design flow rate development and mass balance. A description of the treatment components of the WTP and the building design are presented in Sections 5.3 through 5.6.

The technical specifications, cost estimate, project schedule, and submittal register are provided in Appendices F through I, respectively.

5.1 Dredging/Dewatering/Water Treatment Assumptions

Based on the results and conclusions presented in the *Draft Final Pre-design Field Test Dredge Technology Evaluation Report* (Foster Wheeler, July 2001), the *Draft Wastewater Pilot-Scale Treatment Summary Report* (Foster Wheeler, January 2001), the *Final Feasibility Investigation of Sediment Dewatering Alternatives* (Foster Wheeler, May 2001), and the *Draft Cost Benefit Analysis for Expansion of the Wastewater Treatment Plant at Operable Unit #1* (Foster Wheeler, May 2001), the dredging, dewatering, and water treatment assumptions were developed. These assumptions are presented in the following sections and summarized in Table 5-1.

<u>Dredging Assumptions</u>

- Two (2) dredges will be used under the unlimited funding scenario. A "BEAN Type" dredge will be used to remove sub-tidal sediments and an "Amphibex Type" dredge will be used for removal of sediments within the inter-tidal areas.
- One (1) dredge will be used under the limited funding scenario. Either a "BEAN Type" or an "Amphibex Type" dredge will be used for sediment removal.
- A "BEAN Type" dredge system includes a hydraulic excavator, +4 inch (minimum) material separation, and a slurry processing unit (SPU) to transfer the material to the dewatering facility.
- An "Amphibex Type" dredge system includes an amphibious excavation with a hydraulic pumping system to transfer the material to the dewatering facility.
- The average operating rate for the "BEAN Type" dredge and the "Amphibex Type" dredge are 95 in-situ yd^3 per hour and 35 in-situ yd^3 per hour, respectively.
- The peak operating rate for the "BEAN Type" dredge and the "Amphibex Type" dredge are 150 in-situ yd^3 per hour and 60 in-situ yd^3 per hour, respectively.
- Dredging operations will be conducted in two 10 hour shifts per day, 6 days per week.
- Effective operating time will be 8 hours/shift per dredge.
- Effective operating time at peak production will be 2 hours/shift per dredge.
- Solids content (by weight) of in-situ sediment ranges from 40 to 80%, with the average being 45%.
- Dredged material from the "BEAN Type" dredge system will be transferred to the dewatering system at an average solids content of 15% (by weight).

- Dredged material from the "Amphibex Type" dredge system will be transferred to the dewatering system at a solids content of 5 to 15% (by weight).
- Filtrate from the dewatering system will be recycled to the SPU of the "BEAN Type" dredge.
- Quality of filtrate will be acceptable to the dredging subcontractor for recycle.

Dewatering Assumptions

- Dredged slurry as received by the dewatering subcontractor will contain an average of 15% solids (by weight).
- Solids material within dredged slurry will be $\leq$ 4 inches.
- Dewatering operations will include coarse material (+3/8 inch) separation and sand (+100 mesh) separation.
- 1% of in-situ dry solids are +3/8 inch, and 23% are +100 mesh. (Based on an initial in-situ solids content of 40%).
- Assume for 80% in-situ solids content sediment, +100 mesh material is approximately 50%.
- Dewatering system will produce a 60% solids (by weight) filter cake.
- Dewatering filtrate will be pumped from the sediment dewatering facility to CDF Cell #2 for recycle and/or treatment.
- Filtrate will be pumped in high density polyethylene (HDPE) floating and/or submerged pipe to CDF Cell #2.
- Sediments within CDF Cell #1 will be used for startup of the desanding and dewatering facilities.

Water Treatment System Assumptions

- The water treatment system will be designed for an initial treatment capacity of 700 gpm and have the ability to increase to 2,000 gpm.
- The water treatment system will include a chemical addition system (alum and polymer), an inclined plate clarifier, a sand filtration system, a polishing filtration system, and a liquid-phase GAC adsorption system.
- The existing CDFs (Cells #1, #2, and #3) will be available for the water treatment system.
- CDF Cell #1 will be free of sediment prior to WTP beginning operations.
- The water treatment system will be designed to operate up to 24 hours per day, 7 days per week.
- Underflow from the inclined plate clarifier will be transferred to the slurry holding tank and then to the sediment desanding facility located on the Debris Disposal Area (DDA) at Area C.
- Backwash from the sand filtration system will be transferred to the slurry holding tank and then to the sediment desanding facility.
- The PCB concentration in the dewatering system filtrate will be less than 15 ppb (based on bench scale dewatering test results).

Table 5-1
Dredge, Dewatering, and Water Treatment Assumptions
New Bedford Harbor Superfund Site – OU #1

Parameter	"BEAN Type" Dredge	"Amphibex Type" Dredge (15%)	"Amphibex Type" Dredge (5%)
Dredge Work Week (days)	6	6	6
Shifts/Day	2	2	2
Hours/Shift	10	10	10
Number of Dredges	1	1	1
Effective Operating Time (hrs/day)	16	16	16
Operating Time @ Peak Production (hrs/day)	4	4	NA
Peak Operating Rate (in-situ yd^3 /hr)	150	60	60
Average Operating Rate (in-situ yd^3/hr)	95	35	35
Daily Dredge Rate (in-situ yd^3)	1,740	660	832
Recycle Water for Slurry Makeup/Transfer (%)	100	0	0
Average % Solids (by weight) of In-situ Sediment	45	45	45
Average % Solids (by weight) of Slurry Transferred to Dewatering System	15	15	5
% Solids (by weight) of Filter Cake Generated	60	60	60
Filtrate Transferred to CDF Cell #1/#2 (gal/day)	1,106,640	419,760	1,526,160
Filtrate Requiring Treatment (gal/day)	232,560	419,760	1,526,160
Maximum WTP Work Week (days)	7	7	7
Maximum WTP Operating Time (hrs/day)	24	24	24
Required WTP Capacity (gpm)	138	250	908

5.2 Design Flow Rate Development

Using the assumptions developed for dredging, sediment dewatering, and water treatment (presented above), the WTP flow rate is estimated to range from approximately 138 gpm (one "BEAN Type" dredge) to 1,818 gpm (two "Amphibex Type" dredges at 5% solids by weight) depending on the funding scenario, the type of dredge system used, and % solids of the slurry transferred from the "Amphibex Type" dredge. Therefore, the required WTP capacity could be well above the limits of the existing water treatment facility. Detailed spreadsheets supporting these flow rates are provided in Appendix D.

5.3 Design Influent Concentrations

Limited chemical and physical analytical data for representative filtrate from a mechanical sediment dewatering process was available prior to beginning the WTP design. Therefore, the design influent concentrations are based on the results of the pilot scale water treatment tests conducted in September 2000. While not representative of the filtrate expected to be generated in the future by a mechanical dewatering process, it represents reasonably conservative concentrations for design. These influent concentrations for PCBs and heavy metals are presented on Figure 5-1.

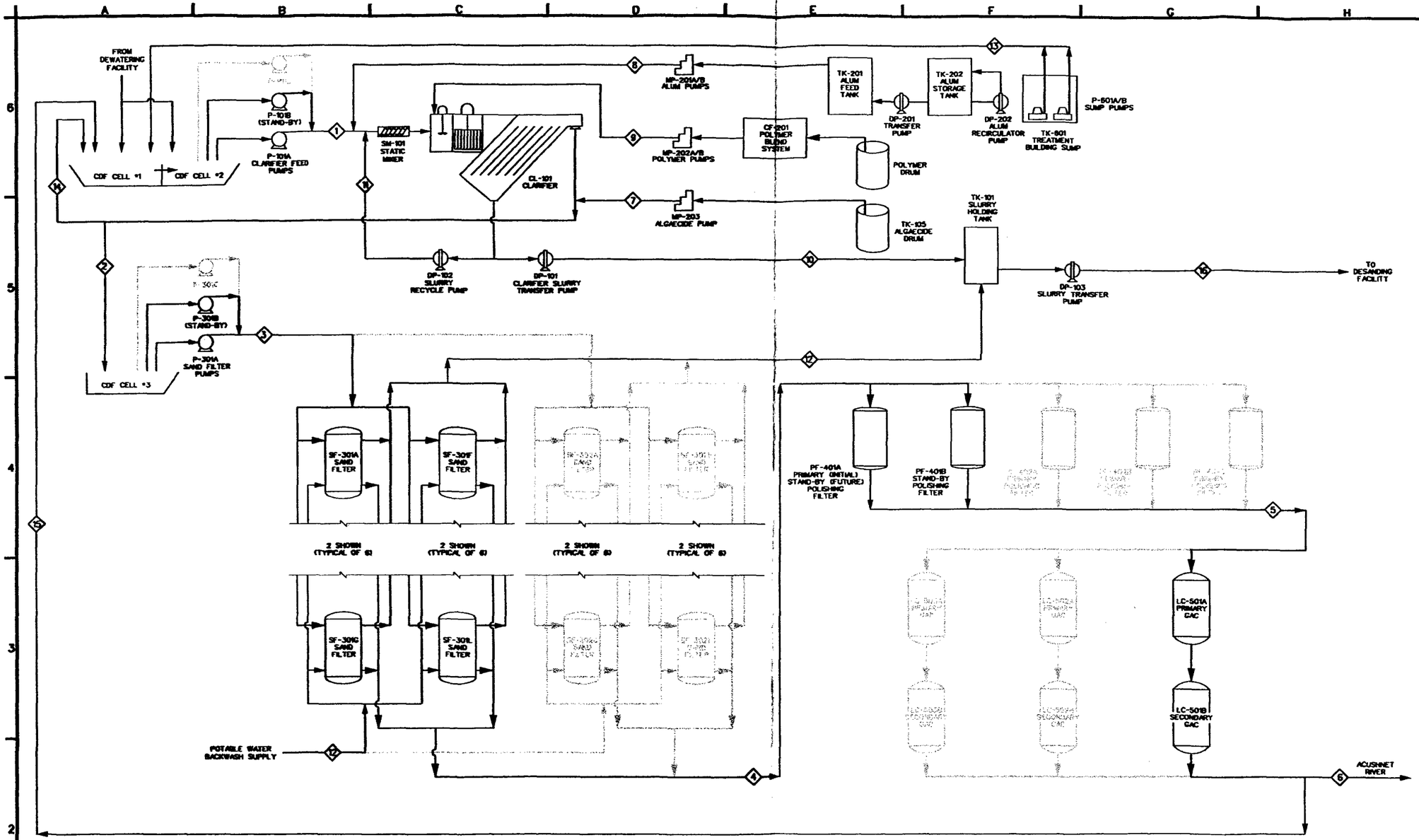

WATER TREATMENT PLANT MASS BALANCE CALCULATION	1 CLARIFIER INFLUENT	2 CLARIFIER EFFLUENT	3 CDF CELL #3 EFFLUENT	4 SAND FILTER EFFLUENT	5 POLISHING FILTER EFFLUENT	6 GAC EFFLUENT	7 ALGACIDE FEED SYSTEM	8 ALUM FEED SYSTEM	9 POLYMER FEED SYSTEM	10 CLARIFIER SLURRY †	11 SLURRY RECYCLE	12 SAND FILTER BACKWASH †	13 TREATMENT BUILDING SUMP	14 CLARIFIER EFFLUENT RECYCLE	15 GAC EFFLUENT RECYCLE	16 SLURRY EFFLUENT †
INITIAL AVERAGE FLOW (GPM)	700	665	665	665	665	665	0.01	0.15	0.27	35	NA	45	100**	665**	665**	70
INITIAL TOTAL SUSPENDED SOLIDS (PPM)	15	7	1.49	0.88	0.88	0.60	25	150	2	3,122	NA	9	NA	NA	NA	1,391
INITIAL MASS FLOW - WATER (LB./HR)	355,440	337,884	337,884	337,884	337,884	337,884	0	56	140	17,772	NA	22,512	NA	NA	NA	40,021
INITIAL MASS FLOW - SOLIDS (LB./HR)	5	2	0.50	0.29	0.29	0.20	9	53	1	55	NA	0.20	NA	NA	NA	57
FUTURE AVERAGE FLOW (GPM)	2000	1901	1901	1901	1901	1901	0.05	0.44	0.76	100	NA	90	100**	1900**	1900**	190
FUTURE TOTAL SUSPENDED SOLIDS (PPM)	15	7	1.49	0.88	0.88	0.60	25	150	2	3,122	NA	13	NA	NA	NA	1,674
FUTURE MASS FLOW - WATER (LB./HR)	1,015,544	965,384	965,384	965,384	965,384	965,384	0	160	398	50,777	NA	45,024	NA	NA	NA	95,051
FUTURE MASS FLOW - SOLIDS (LB./HR)	15	6	1.42	0.84	0.84	0.57	25	150	2	161	NA	0.58	NA	NA	NA	162
NTUs*	10	4.37	1.00	0.59	0.59	0.40	NA	NA	NA	NM	NA	NA	NA	NA	NA	NA
PCBs (PPB) <0.05 ug/l	15.00	12.87	2.89	2.01	2.01	<0.05	NA	NA	NA	25	NA	NA	NA	NA	NA	NA
TOTAL CADMIUM (PPB) <5.0	<5	<5	<5	<5	<5	<5	NA	NA	NA	<5	NA	NA	NA	NA	NA	NA
TOTOL CHROMIUM (PPB) <22.0	<22	<22	<22	<22	<22	<22	NA	NA	NA	<22	NA	NA	NA	NA	NA	NA
TOTAL COPPER (PPB) <3.0	25	13	12	NA	NA	2	NA	NA	NA	<3	NA	NA	NA	NA	NA	NA
TOTAL LEAD (PPB) <5.0	9	<5	<5	<5	<5	<5	NA	NA	NA	<5	NA	NA	NA	NA	NA	NA

** - DESIGN FLOW RATE INDICATED. FLOW NOT NORMALLY PRESENT
*NTUs - NEPHELOMETRIC TURBIDITY UNITS
NM - NO MESUREMENT
NA - NOT APPLICABLE
† - STREAMS ARE INTERMITTENT

NOTE:
SUBDUED CONDITIONS REPRESENT FUTURE EQUIPMENT INSTALLATIONS FOR 2,000 GPM CAPACITY SYSTEM.

100% DESIGN

US Army Corps of Engineers
New England District

Rev.	Description	Date	Approved
0	ISSUED FOR 100% DESIGN SUBMITTAL	8/24/00	JJS
A	ISSUED FOR USACE REVIEW	10/9/01	JJS

U.S. ARMY ENGINEER DISTRICT
CORPS OF ENGINEERS
CONCORD, MASSACHUSETTS

FOSTER WHEELER ENVIRONMENTAL CORP.
133 FEDERAL STREET
BOSTON, MASSACHUSETTS

NEW BEDFORD HARBOR SUPERFUND SITE
NEW BEDFORD, MASSACHUSETTS
WATER TREATMENT PLANT DESIGN

PROCESS FLOW DIAGRAM AND MASS BALANCE

Reference number:
FIGURE 5-1

5.4 Treatment Components

Based on the dredging, dewatering, and water treatment assumptions presented above in Sections 5.1 and 5.2, the existing 350 gpm water treatment system potentially does not have sufficient capacity to treat the dredge waters generated during the remediation of OU #1. Therefore, a new WTP will be constructed adjacent to the existing facility. The new WTP will include chemical addition (alum and polymer), clarification (an inclined plate clarifier), sand filtration, polishing filtration, and liquid-phase GAC adsorption rather than UV/oxidation. A process flow diagram with mass balance based on the results of the treatability/pilot studies (Appendix C) data is provided on Figure 5-1. The figure provides process equipment for the anticipated initial flow rate of 700 gpm (bolded) and potentially future flow rate of 2,000 gpm (subdued). The following sections describe the major treatment components of the WTP. The basis of design for each component is presented along with preliminary sizing where appropriate.

5.4.1 Filtrate Transfer From Mechanical Dewatering System

Filtrate separated from the dewatered sediment will be pumped from the mechanical dewatering facility approximately 1.3 miles up river to the water treatment facility. The filtrate will be transferred via floating HDPE pipe similar to that to be used for the dredging operations. The transfer piping will be configured such that the filtrate can be transferred to CDF Cell #2 or, if necessary, to CDF Cell #1. The design of the filtrate transfer pump(s) and transfer piping will be included in the dewatering system design.

Based on the mass balance calculations, the volume of water to be transferred from the dewatering system to CDF Cell #2 for the unlimited funding scenario could range from 1,590 gpm (one BEAN and one Amphibex at 15%) to 3,179 gpm (two Amphibex at 5%) for a dredge rate of 2,400 in-situ yd^3 per day.

5.4.2 Filtrate Equalization Basin (CDF Cell #2)

Water from the mechanical dewatering system will be transferred to existing CDF Cell #2 for equalization. Should the filtrate be transferred to CDF Cell #1 first, the filtrate will overflow the existing weir gate (FCV-1) into CDF Cell #2. The equalization basin has an available volume of approximately 540,000 gallons, which will provide a residence time of approximately 2.8 to 5.7 hours at flow rates of 3,179 gpm and 1,590 gpm, respectively, assuming no recycle to a SPU.

Pumps P-101 A/B/C will transfer the filtrate from CDF Cell #2 to the clarifier system.

5.4.3 Clarifier Feed Pumps (P-101 A/B/C)

Water will be transferred from the equalization basin (CDF Cell #2) to the clarifier system by 1,000 gpm variable frequency drive (VFD) pumps. At 700 gpm, pump P-101A will operate with pump P-101B acting as a backup. At 2,000 gpm, pumps P-101A and P-101B will operate in parallel with pump P-101C acting as a backup. The pumps will be self-priming, suction end pumps and will be located within the existing water treatment facility. Each pump will have its own 8-inch suction end piping with a 12-inch flared end and will discharge in to a common 12-inch header pipe.

Specific design criteria for the clarifier feed pumps are listed in Table 5-2. Hydraulic calculations and technical data are provided in Appendices D and E, respectively.

Table 5-2
Design Criteria – Clarifier Feed Pumps (P-101 A/B/C)

Parameter	Specifications
Type:	Self-priming (electric)
Capacity:	1,000 gpm at 44 feet TDH
Motor Horsepower:	60 hp
Operating Speed:	Variable frequency drive

5.4.4 Flowmetering (FE-101)

The water flow will be measured using a flowmeter located between the clarifier feed pumps (P-101 A/B/C) and the clarifier system (CL-101). The meter will be capable of transmitting an output signal to the process controller to measure instantaneous flow rates. The process controller will be capable of receiving the signal from the meter and indicate the flow rate in gpm and total flow in gallons. The measured flow rate will be used to control the speed of the clarifier feed pumps (P-101 A/B/C) to maintain the operation selectable process flow rate.

5.4.5 Clarifier System (CL-101)

The clarifier system will include a three-part chemical/polymer addition system, comprised of a flash mix tank, a slow mix (flocculation) tank, and an inclined plate gravity settler, which outflows into CDF Cell #3. The clarifier system (CL-101) is designed to remove suspended solids present in the influent water.

Alum will be added in-line (via metering pumps MP-201 A/B) prior to the water entering the flash mix tank to initiate the flocculation process. An in-line static mixer (SM-101) will be used to ensure complete mixing of the alum. Bulk storage of the alum will be outside of the WTP in a 4,500-gallon tank (TK-202); recirculation of the alum in this tank will be with an air-driven diaphragm pump (DP-202). The alum storage tank will feed (via transfer pump DP-201) the 500-gallon alum feed tank (TK-201) which will be installed adjacent to the clarifier. Polymer will be introduced (via metering pumps MP-202 A/B) to the flash mix tank to promote coagulation of the suspended solids. The tank will be agitated with a constant speed mixer (MX-101) to ensure uniform distribution of the alum and polymer. During operation of the WTP, the operator will have flexibility of adjusting the alum and polymer addition prior to and in the flash tank to optimize the removal efficiency.

Effluent from the flash mix tank will gravity flow into the flocculation tank. The tank will be agitated with a variable speed paddle mixer (MX-102) to ensure uniform distribution of the polymer and future flocculent within the tank. Gentle mixing will be used to allow for minimum shear on the floc and the agglomeration of the dispersed particulate.

Sedimentation of the flocculated particles will be achieved in an inclined plate clarifier. The clarifier will provide a controlled, non-turbulent settling area for removal of the suspended solids. For the alum/polymer particles generated, a design overflow rate of 1.0 gpm/ft^2 of horizontal projected area (@ 2,000 gpm) is required. The flocculated particles also require the inclined plates to be set at an angle of 60 degrees to ensure adequate migration and solids contact of the solid particles down the plates.

The solids from the clarifier system will be pumped to a 9,000 gallon slurry holding tank (TK-101) with an air-driven diaphragm pump (DP-101). From the slurry holding tank, the slurry will be transferred to

the sediment desanding facility with diaphragm pump DP-103. The slurry will be transferred to the desanding facility in a 3-inch HDPE pipe which will be routed aboveground, north of CDF Cell #1, to a termination point at the northwest corner of the DDA. The clarifier system will also include a slurry recycle pump (DP-102) which can be used as a spare clarifier slurry transfer pump if DP-101 fails.

Specific design criteria for the clarifier system and chemical addition systems are presented in Tables 5-3 and 5-4, respectively. The mechanical specifications for the chemical feed system and clarifier are contained in Sections 11242 and 11540 of the technical specifications, respectively.

Table 5-3
Design Criteria – Clarifier System

Parameter	Specifications
Flash Mix/Flocculation Tank	
Approximate Volume:	5,200 gallons
Material of Construction:	Epoxy coated carbon steel
Flash/Flocculation Tank Mixers (MX-101, MX-102)	
Motor Horsepower:	½ hp (MX-101 – constant speed) ½ hp (MX-102 – variable speed)
Material of Construction:	Stainless steel (SS) shaft and impeller
Clarifier (CL-101)	
Type:	Inclined plate
Design Overflow Rate:	1.0 gpm/ft^2 @ 2,000 gpm
Horizontal Projected Area:	2,640 ft^2
Angle of Inclination for Plates:	60 degrees
Material of Construction (Inclined Plates):	Acid resistant FRP
Material of Construction (Vessel):	Epoxy coated carbon steel
Clarifier Slurry Transfer Pump (DP-101)	
Type:	Air-driven diaphragm
Pump Capacity:	100 gpm @ 40 psi
Material of Construction:	Plastic
Slurry Recycle Pump (DP-102)	
Type:	Air-driven diaphragm
Pump Capacity:	20 gpm @ 10 psi
Material of Construction:	Plastic
Slurry Transfer Pump (DP-103)	
Type:	Air-driven diaphragm
Pump Capacity:	100 gpm @ 40 psi
Material of Construction:	Plastic
Slurry Holding Tank (TK-101)	
Volume:	9,000 gallons
Material of Construction:	Epoxy coated carbon steel

Table 5-4
Design Criteria – Chemical Feed Systems

Parameter	Specifications
Alum Feed Tank (TK-201)	
Volume:	500 gallons
Dimensions:	4 ft diameter x 6 ft high
Material of Construction:	FRP on cross-linked PE
Alum Storage Tank (TK-202)	
Volume:	4,500 gallons
Dimensions:	8 ft diameter x 12 ft high
Material of Construction:	FRP on cross-linked PE
Liquid Polymer Feed System (CF-201)	
Type:	Polymer Blending System
Dimensions:	2 ft x 3 ft
Material of Construction:	Carbon steel
Chemical Feed Pumps (MP-201 A/B, MP-202 A/B, MP-203)	
Type:	Metering Pump
Flow Range:	
Alum (48.5%)	10 to 30 gph, ¾ hp
Polymer (0.5%)	15 to 50 gph, ¾ hp
Algaecide	1 to 5 gph
Alum Transfer and Recirculation Pumps (DP-201 and DP-202)	
Type:	Air-driven diaphragm
Pump Capacity:	20 gpm @ 10 psi
Material of Construction:	Plastic

5.4.6 Filtration Equalization Basin (CDF Cell #3)

The overflow from the inclined plate clarifier will gravity feed into CDF Cell #3 for equalization prior to transfer to the filtration system. Algaecide will be added (metering pump MP-203), as needed, to the overflow before entering CDF Cell #3. Although the primary function of CDF Cell #3 is to act as a sump for the filtration/tertiary unit process systems, the cell will also act as a secondary clarifier, which will further reduce the suspended solids concentration. CDF Cell #3 has a maximum storage capacity of 430,000 gallons and provides approximately 3.6 hours to 10.2 hours of residence time at flow rates of 2,000 gpm and 700 gpm, respectively.

5.4.7 Filtration Feed Pumps (P-301 A/B/C)

The water will be transferred from CDF Cell #3 through the sand filtration system (SF-301/302), the polishing filtration system (PF-401/402), and the liquid-phase GAC adsorption system (LC-501/502/503) by 1,000 gpm VFD pumps (P-301 A/B/C). At 700 gpm, pump P-301A will operate with pump P-301B acting as a backup. At 2,000 gpm, pumps P-301A and P-301B will operate in parallel with pump P-301C acting as a backup. The pumps will be self-priming, suction end pumps and will be located within the existing water treatment facility. Each pump will have its own 8-inch suction end piping with a 12-inch flared end and will discharge in to a common 12-inch header pipe.

Specific design criteria for the filtration feed pumps are listed in Table 5-5. Hydraulic calculations and technical data for Pumps P-301 A/B/C are provided in Appendix D and E, respectively.

Table 5-5
Design Criteria – Filtration Feed Pumps (P-301 A/B/C)

Parameter	Specifications
Type:	Self-priming (electric)
Capacity:	1,000 gpm at 140 feet TDH
Motor Horsepower:	150 hp
Operating Speed:	Variable frequency drive

5.4.8 Flowmetering (FE-301)

The water flow to the filtration system will be measured using a flowmeter located between the filtration feed pumps (P-301 A/B/C) and the sand filtration system (SF-301/302). The meter will be capable of transmitting an output signal to the process controller to measure instantaneous flow rate. The process controller will be capable of receiving the signal from the meter and indicate the flow rate in gpm and total flow in gallons. The measured flow rate will be used to control the speed of the filtration feed pumps (P-301 A/B/C) to maintain the operator selectable process flow rate.

5.4.9 Sand Filtration System (SF-301/302)

The primary filtration will be conducted with a backwashable sand filtration system (SF-301/302) which will reduce the concentration of suspended solids present in the filtrate. During normal operations, the filters are designed to remove particles >2 μm and operate in a hydraulic loading range of 83 to 91 gpm (17 to 18.5 gallons per ft^2) per vessel. Therefore, each system (SF-301 and SF-302) will be capable of treating up to 1,000 gpm.

A dedicated filter control panel will be provided with the sand filters. The filters will be backwashed automatically with the backwash sequence being initiated on a timed run or head loss basis. The filter control panel will facilitate sequential backwashing in both the "Hand" and "Auto" modes (i.e., locally and via the Programmable Logic Controller [PLC] system).

During the backwash cycle, the system flow rate may increase up to 91 gpm. The 91 gpm flow rate is within the design range of the proposed WTP. The increased flow rate will be only temporary and will be automatically controlled by a flow control valve. Backwash can also be manually initiated by a push button control at the filter control panel. Potable water will be used for the backwash cycle. The cycle

will include an upflow rinse to loosen the media and maximize water contact with trapped particles. A downflow rinse will then be conducted to purge the bottom of the filter of particulate matter and to pack the media for efficient filtering. Spent backwash water will be sent to the slurry holding tank for transfer to the desanding facility.

Specific design criteria for the sand filtration system are provided in Table 5-6 and Section 11394 of the technical specifications.

5.4.10 Polishing Filtration System (PF-401/402)

Prior to entering the liquid-phase GAC adsorption system, the water will be passed through a polishing filtration system (PF-401/402). This system will consist of 36-inch-diameter stainless steel vessels, each containing 120 cartridge filters. Initially, these cartridge filters will be rated for 5 μm filtration, but may be increased depending on actual operating conditions. Each vessel will be capable of handling approximately 700 gpm. Therefore, for a 700 gpm system, two (2) vessels will be used – one (1) primary and one (1) backup. At 2,000 gpm, the system will consist of three (3) primary vessels and two (2) backup vessels. The purpose of the polishing filtration system is to protect the GAC adsorption system should the sand filters be less effective than >2 μm particle removal, thus prolonging the life of the carbon beds.

Specific design criteria for the polishing filtration system are provided in Table 5-6 and Section 11395 of the technical specifications.

Table 5-6
Design Criteria – Filtration Systems

Parameter	Specifications
Sand Filtration System (SF-301/302)	
# of Vessels:	12
Filter Diameter:	2 feet 6 inches
Filter Height:	6 feet
Filter Media:	Sand
Filtration Bed Depth:	36 inches
Total Filtration Area:	4.9 ft^2
Hydraulic Loading @ 1,000 gpm:	16.9-18.5 gallons/ft^2/vessel
Particle Removal:	>2 μm
Pressure Drop:	15 psi
Material of Construction:	304 stainless steel
Polishing Filtration System (PF-401/402)	
# of Vessels:	2
Housing Diameter:	36 inches
Housing Height:	96 inches
Particle Removal:	>5 μm
Pressure Rating:	70 psi @ 200 °F
Material of Construction:	304 stainless steel
Number of Cartridge Filters:	120

5.4.11 Granular Activated Carbon Adsorption System (LC-501/502/503)

Following the polishing filtration system, the filtrate is expected to have a PCB concentration of <5 μg/l and a turbidity of <1.0 NTU. GAC will be used to reduce the concentration of PCBs to below the discharge limit of 0.065 μg/l (per Aroclor). Each GAC adsorption system will consist of two vessels operating in series, each with 20,000 pounds of liquid-phase GAC. Each vessel will operate in the downflow mode and will be capable of treating up to 700 gpm. Sample ports will be located upstream, between, and downstream of the carbon adsorption system to enable the operators to monitor the PCB concentrations within the water stream. When breakthrough of the first carbon vessel occurs, the carbon of the first vessel will be replaced, and the second vessel will be become the new lead vessel.

Estimated carbon usage is based on the treatability results and the anticipated PCB concentration in the influent to the carbon adsorption system. At a flow rate of 700 gpm and an influent PCB concentration of <10 μg/l, the carbon usage rate will be approximately 290 pounds per day and, as a result, each vessel with 20,000 pounds of GAC has an expected life of 69 days.

Specific design criteria for the liquid-phase carbon adsorption system are provided in Table 5-7 and Appendix E. The mechanical specifications for the system are contained in Section 11240 of the technical specifications.

Table 5-7
Design Criteria – Liquid-Phase Carbon Adsorption Vessels (LC-501/502/503)

Parameter	Specifications
Vessel Diameter:	10 feet
Vessel Bed Height:	22 feet
GAC per Vessel:	20,000 pounds
Number of Vessels:	2
Maximum Flow Rate:	700 gpm
Operation Mode:	Series
Material of Construction:	Coated carbon steel

5.4.12 Sump Pumps (P-601 A/B)

Process water collected in the building's 5-foot by 5-foot, 3-foot deep substructure sump pit will be transferred to the slurry holding tank (TK-101) by 100 gpm submersible pumps. Pump P-601A will operate as the primary pump with pump P-601B acting as a backup. Water will be pumped through a 2-inch PVC pipe located beneath the floor slab.

Specific design criteria for the sump pumps are listed in Table 5-8. Hydraulic calculations and technical data are provided in Appendices D and E, respectively.

Table 5-8
Design Criteria – Sump Pumps (P-601 A/B)

Parameter	Specifications
Type:	Submersible
Capacity:	100 gpm at 40 feet TDH
Motor Horsepower:	1-½ hp

5.4.13 Water Treatment System Discharge

Initial construction of the WTP will allow for two discharge options. At flow rates less than 1,000 gpm, the treated water will be routed through a new buried 10-inch PVC pipeline which will connect the new WTP building to the existing 10-inch discharge line. At flow rates greater than 1,000 gpm, the treated effluent will be discharged through a 14-inch HDPE pipeline which will be installed aboveground and will follow the routing of the existing 10-inch discharge line. In order to accommodate the higher discharge flow rates, the existing outfall would have to be upgraded accordingly.

5.4.14 Monitoring Requirements

The water treatment system will be monitored at various points along the treatment process to ensure that the system is functioning properly and that discharge requirements are being achieved. The effluent from the process will be monitored by a refrigerated automatic composite sampler at a point after the GAC adsorption system and prior to the discharge line. The sampler will take 24-hour composite samples to monitor performance and ensure the system is meeting the water discharge standards. The effluent samples will be collected and analyzed daily for the first week of operation. If, based on the first week of analyses, the water treatment system is operating properly (i.e., the system has not exceeded any of the effluent limits for seven consecutive days), required sample analysis will be reduced to once per week. If any sample analysis exceeds the discharge standard(s), monitoring frequency will again be daily until five consecutive samples are within appropriate limit(s). Both the Startup Plan and O&M Manual, prepared prior to the startup and testing of the WTP, will contain details of all the monitoring requirements (i.e., sampling of both the effluent and at various points along the treatment process).

5.5 Modification to Existing Water Treatment Plant

In order to support the construction and operation of the new water treatment facility, the existing WTP will need to be modified as follows:

1. To provide an equipment pad for the new clarifier feed pumps (P-101 A/B/C), the alum feed system and polymer feed systems will be removed. The 6-inch-high by 6-inch-wide curbing for these systems will be filled with concrete in order to provide a level equipment pad for the new pumps.
2. The first train of new sand filters (SF-301) will be installed in the present location of the polishing filters, the polishing filter feed sump, and the polishing filter feed pumps which will all need to be removed.
3. The second train of new sand filters (SF-302) will be installed in the present location of the flocculation tanks. The flocculation tanks, flocculation tank agitators, and flocculation sludge transfer pump will, therefore, be removed.

4. The new filtration feed pumps (P-301 A/B/C) will be installed in the present location of the UV/oxidation system. This system, along with the composite sampler and air compressor, will be removed to accommodate the new filtration feed pumps.
5. To provide access to the breezeway to the new WTP, the hydrogen peroxide feed system, including the hydrogen peroxide storage tank and feed pumps, will be removed.
6. All associated concrete pads and curbing, with the exception of curbing being filled for an equipment pad, will be demolished. All associated process piping and power and control wiring will also be removed or terminated in-place.

Drawings M-103 and E-101 indicate in more detail the equipment to be removed for the breezeway, sand filters, and clarifier and filtration feed pumps. Modification activities will also include removal of all additional process systems associated with the existing WTP, with the exception of the motor control center (MCC).

5.6 New Water Treatment Building

The new water treatment facility will be located adjacent to the existing water treatment facility. Installation activities, which will be performed by various subcontractors, will involve, but not be limited to, site work, including clearing, grading, and utility connections; construction of the foundation and pre-engineered metal building; construction of the interior architectural aspects of the building, including interior finishes; and installation of the plumbing, mechanical, and electrical systems.

5.6.1 Building Foundation System

The building subcontractor will be required to provide the design of the building foundation system, inclusive of the foundation for the covered walkway. The design will be completed in accordance with the appropriate technical specifications and design drawings. The geotechnical subsurface criteria necessary for the foundation design, including allowable soil bearing capacity and subgrade information, will be provided to the building subcontractor by Foster Wheeler. The foundation design will include all details and dimensions required for the proper construction of the complete foundation system, including, but not limited to, reinforcing steel, frost walls, column footings, openings for utilities and process piping, the floor slab, and equipment pads. The design will include 6-inch curbing and will allow for the floor slab to slope to a central floor drain which will lead to a 5-foot by 5-foot, 3-foot-deep substructure sump pit. Process water collected in the sump pit will be pumped to the slurry holding tank through a 2-inch diameter pipe situated below the floor slab. Power to the sump pump will be provided through a ½-inch conduit situated below the floor slab.

5.6.2 Pre-Engineered Metal Building

The building subcontractor will be required to design, fabricate, deliver, and install the pre-engineered metal building and covered walkway in accordance with the appropriate technical specifications and design drawings. The new water treatment facility will be oriented to the west of the existing water treatment facility and will consist of a pre-engineered metal building with steel framing and a metal gable roof and vertical wall panels. The roof slope will be ½:12 (vertical to horizontal). The building framing will be rigid frame type providing a clear interior span. The building will be complete and weather-tight and suitable for its functional requirements. The building plan dimensions will be as provided by the building manufacturer's standard, but not less than the dimensions indicated on the design drawings (75 feet by 90 feet), nor exceeding the indicated dimensions by more than the amount of the closest standard size thereto. The inside clear height between the finished floor and the bottom of roof steel will

be a minimum of 25 feet as indicated on the design drawings. Roof insulation will be R-19 and wall insulation will be R-11. A covered walkway will connect the existing water treatment facility to the new water treatment facility.

In addition to the major aspects of the pre-engineered metal building, the final design will include the following physical features:

1. Three (3) rooms (process room, control room, bathroom)
2. One (1) covered walkway (10 ft wide x 13 ft high x 30 ft long)
3. Two (2) overhead rolling doors (15 ft wide x 25 ft high)
4. Three (3) exterior single steel doors (3 ft wide x 7 ft high)
5. Two (2) interior single steel doors (3 ft wide x 7 ft high)
6. Three (3) exterior steel windows (one 3 ft x 3 ft, two 3 ft high x 5 ft wide)
7. One (1) interior steel window (3 ft high x 5 ft wide) in the control room
8. Four (4) louver openings (two 2 ft x 2 ft, two 3 ft x 3 ft)
9. Ten (10) roof openings (two 2 ft diameter, six 4 in. diameter, two 2 in. diameter)

Doors and frames will be hollow metal and insulated. Where doors lead into spaces that are curbed for containment, ramps will be provided at the door. Each component of the work is further described and detailed in the appropriate technical specifications and design drawings. The building subcontractor will install and properly seal all louvers and roof openings once the design is finalized. In addition, the building subcontractor will cut and properly seal all scheduled openings through the building walls to accommodate process pipe, electrical conduit, and other utility penetrations.

The design and construction of the interior architectural aspects of the building, including interior masonry walls; interior partitions, doors, and windows; acoustical tile ceilings; and resilient flooring for both the control room and the bathroom, as well as protective floor coatings for the process room, will also be completed by the building subcontractor. Interior work will include constructing a mezzanine above the control room and bathroom, and installing a set of stairs leading to the mezzanine. All interior room painting will be completed by the building subcontractor.

5.6.3 Utilities

Water service will be obtained from the existing 4-inch PVC water line at the site. Sewer and gas service will be extended from Sawyer Street to the new water treatment facility. Electrical service will be obtained at 480 volt, 3 phase, 60 hertz from the existing water treatment facility. Telephone service will be acquired for voice and data communications. In addition, a dedicated outside phone line will be provided for remote communication with the PLC.

5.6.4 Site Grading and Access

Final site grading will be performed to establish proper drainage of stormwater away from the water treatment facility. Permanent paving will not be required. Access to the facility from Sawyer Street will be by the existing gravel road.

5.6.5 Plumbing

The mechanical subcontractor will be responsible for providing the materials, equipment, and labor to install a plumbing system as follows:

1. Sanitary system will be extended from the exterior main into the building through the floor slab. The system will serve all regular plumbing fixtures consisting of water closet, lavatory, and floor drain in the bathroom.
2. Process drainage system will service the process room, including the service sink, emergency shower, and eyewash station, and will consist of central floor drain which terminates in the sump pit. Process water collected in the sump pit will be pumped out with sump pumps into the slurry holding tank through a 2-inch diameter pipe situated below the floor slab. Power to the sump pumps will be provided by the electrical subcontractor through a ½-inch conduit situated below the floor slab.
3. Potable cold water system will be extended from the exterior main into the building through the floor slab. The system will serve all regular plumbing fixtures including the emergency shower and eyewash station. The system will also provide water connections for all process and mechanical equipment, as required.
4. Potable hot water system will be provided, with hot water produced by an electric water heater. The heater and system will be of sufficient size to serve all regular hot water required plumbing fixtures.
5. Natural gas service will be extended from the exterior main into the building through the floor slab. The service will extend to each gas-fired heating unit.

5.6.6 HVAC

The heating, ventilation, and air conditioning (HVAC) requirements will be determined by the mechanical subcontractor who will design and install the system. In general, ventilation will be provided by supply air handling units in combination with exhaust fans. Natural gas-fired unit heaters will supply heating for the process room. Electric baseboard heaters will supply heating for the control room and bathroom. Air conditioning in the control room will be provided by a self-contained, wall-mounted air conditioning unit. The exact number of louvers, exhaust fans, and unit heaters required, including size and location, will be known once the HVAC design is finalized. It is assumed that at least four louvers, two roof exhaust fans for the process room, one wall exhaust fan for the bathroom, and two gas-fired unit heaters will be needed. The mechanical subcontractor will be responsible for testing, adjusting, and balancing of the HVAC system upon installation.

5.6.7 Electric Power and Lighting

Electric power will be run aboveground from the existing water treatment facility to the new water treatment facility through the covered walkway. The electrical subcontractor will detail, furnish, and install the following:

1. Exposed and underground wiring, conduits, supports, fittings, connectors, conduit terminations, and accessories.
2. Interior grounding system, including testing of the complete grounding system.

3. Interior lighting system including transformer, lighting panel and wiring, fixtures, receptacles, switches, and accessories.

5.6.8 Fire Protection

The fire alarm system will be multi-zone, electronically operated, and electrically supervised. The system will include heat and smoke detectors, as well as dual-action manual pull stations. Alarm notification to the City of New Bedford Fire Department will be via a fire alarm system master box, hardwired to the fire department.

5.6.9 Effluent Discharge Piping

Effluent discharge piping, consisting of a new buried gravity 10-inch PVC line connecting the new water treatment facility to the existing 10-inch discharge line, will be installed. The line will be buried at a minimum depth of four feet, primarily for frost protection. The pipe will be installed in suitable bedding material and at a slope to accommodate treatment plant flow rates.

5.6.10 Clarifier Slurry Discharge Piping

Slurry from the slurry holding tank will be pumped approximately 300 feet to the sediment desanding facility to be located on the DDA at Sawyer Street. The discharge line will consist of 3-inch HDPE piping and will be routed aboveground, north of CDF Cell #1, to a termination point at the northwest corner of the DDA.

6.0 PROCESS CONTROL SYSTEM

The WTP is designed to run with minimal operator attention. This philosophy has been used in determining the control logic and instrumentation. Control logic will be provided through both a main PLC, as specified in Technical Specification Section 13405, and through equipment-specific control panels (ECPs) supplied by individual equipment manufacturers and located on the skids and/or concrete pads with the equipment. The ECPs will communicate with the main PLC, transferring alarm conditions and process status where necessary. These ECPs will be provided with the clarifier feed pumps, filtration feed pumps, sand filtration system, polishing filtration system, and compressed air system. The main PLC will provide data storage, as well as control functions. Thirty (30) days of data generated during operations will be stored in the Control System prior to being overwritten. This data can be downloaded to permanent storage, if desired.

The system also includes the capability of local control that will be used for startup and equipment maintenance. Equipment that is strictly for maintenance, or for off-normal operations only (such as isolation valves, bypass valves, equipment drains, etc.), will be controlled locally only. Equipment that is necessary for the normal operation of the plant will be controlled by both a local control panel and the main PLC. Automatic initiation of redundant pumps upon failure of the primary unit will be included in the control logic. Interlocks will be provided to ensure protection of the equipment and prevent tank overflow during certain abnormal conditions. Since the facility is not continuously operator-attended, all interlocks must be reset manually to ensure that an operator responds to correct conditions. Generally, pump motors are equipped with "Failure" alarms that will alarm at the PLC. Tanks will have high-high and low-low level alarms. All alarms that sound at the control panel are considered critical to operations, and will be connected to an automatic dial-out system. This system will alert the appropriate personnel of abnormal conditions and also provide remote monitoring capabilities. Controls for each component of the water treatment system are presented in the following sections.

6.1 Description of the Control System Architecture

The principal means of control of the treatment system will be a microprocessor-based PLC. The PLC, combined with the Human Machine Interface (HMI) which includes video display, personal computer, keyboard, and printer, will provide the plant with complete control of all vital plant operation functions. The system video display graphics will indicate a real-time and continuously updated set of all parameters possibly requiring operator intervention.

All automated functions of the system will be controlled by the PLC; computer interface between operator and plant control will be through the HMI system running Genesis for Windows or equivalent software. The control software will provide graphic display of the plant and controls, alarming, reporting, data acquisition, and historizing functions. An auto-dialer will be used to page the operator and to notify any alarm conditions. Remote monitoring of the process system will be provided by means of a dial-up connection which may be used by appropriate personnel 24 hours per day.

6.2 Graphic Screens

The following graphic screens will be provided for operator interface:

- **Process Main Screen.** This screen will appear initially at system startup. The main screen will give a graphic overview of the entire process, with key equipment and instrumentation displayed, and provide the operator the ability to view any other screen using on-screen pushbuttons.

- **Process Screens.** A graphic will be provided based on each piping and instrumentation diagram (P&ID) pertinent to the process. These screens will provide the operator the ability to control the plant operation and view all critical parameters and alarms.

6.3 Alarm and Event System

System events that require alarming will be processed by the PLC. Alarms will be recorded and annunciated locally in the control room through the control application software.

Alarms will be categorized by priority. Alarms designated as normal priority will annunciate at the computer (using the computer's sound and video system). Each alarm will be logged to an alarm file. Alarms designated as High Priority Alarms will annunciate and log as described above, and will also be transmitted to the operator via an auto-dialer. The auto-dialer will have sixteen inputs available for High Priority Alarms.

Each alarm occurrence (alarms, acknowledge, and clear) will also be logged to a file. System events, such as operator change from manual to automatic operation of the equipment, and motor and pump start or stop, will be also logged to the same file.

An Alarm and Event summary screen will be provided which will include time and date when alarms and/or events occur, point identification, and description.

6.4 Data Logging and Report

Selected analog process points will be periodically stored on the computer hard disk. Data collection will be averaged over the five minutes (and adjustable through programming) and will be stored daily in history file format.

The computer will automatically print out the selected daily report. The report will contain site name, address, date, and time and will be presented using the layout and parameters provided in the specification.

6.5 Motor Control

Each pump motor will be controlled by a local "Hand/Off/Auto" selector switch. In "Hand" position it will be controlled locally, and in "Auto" position it will be controlled remotely from the PLC as follows:

An "AUTO-MANUAL" control station/selector will be included for each motor, accessible from a graphic screen. This soft selector switch will allow positioning of the motor's software control in either AUTOMATIC mode or MANUAL mode to determine if the motor will start and stop automatically or by operator action.

Graphic representation of each pump or mixer will reflect the run status of the motor with color. When the motor is running, the graphic object will be green, and when the motor is off, the graphic object will be red. Additionally, motor operating speed will be displayed for all VFDs.

6.6 Process Instrumentation and Controls

6.6.1 Clarifier Feed Pumps (P-101 A/B/C)

The clarifier feed pumps will have variable speed drive motors controlled by a "Hand/Off/Auto" selector switch. In the "Auto" position, the pumps will be controlled through the PLC. The speed of the pumps will be adjusted automatically to maintain an operator adjustable flow rate set point measured at FE-101.

The pump operation will be controlled through the high level sensor (LSH-101) in CDF Cell #2 to start the pump, and a low level sensor (LSL-101) in CDF Cell #2 for normal pump stop. The clarifier feed pumps will also shutdown on high pressure in the effluent line (PSH-101) or a high-high level signal from the filtration feed basin – CDF Cell #3 (LSHH-301). Either high pressure in the effluent line (PSH-101) or a continuous high-high level signal from CDF Cell #3 (LSHH-301) will sound an alarm at the PLC and dial-out.

The flow rate will be monitored and recorded through an in-line flowmeter (FE-101) which will also be used to control the variable speed drives for the clarifier feed pumps.

A redundant pump alternator will also be implemented in the PLC logic. This will be based on a pump on-off cycle and not on a timed run cycle. After a feed pump is stopped, the alternate feed pump will start the next time that a pump start is required. When a feed pump fails, as indicated by a high-high level in CDF Cell #2, the system will switch to the alternate pump. If the alternate pump also fails, the PLC will alarm and dial-out.

Since the system is to be left unattended at times, the pumps will be interlocked to shutdown with a high pressure (PSH-101) signal in the discharge line and a high-high level (LSHH-301) signal in CDF Cell #3.

6.6.2 Inclined Plate Clarifier (CL-101)

The following sections describe the controls for the metering pumps, mixers, and air-driven diaphragm pumps associated with the inclined plate clarifier system.

6.6.2.1 Alum Transfer Pump (DP-201)

The alum transfer pump (DP-201) will be controlled locally by a field-mounted "Local/Off/Remote" switch, and remotely at the PLC by a "Hand/Off/Auto" selector switch. Low level in the alum feed tank (TK-201) will start the pump and high level in TK-201 will stop the pump. High-high level in TK-201 will sound an alarm at the PLC and dial-out.

6.6.2.2 Alum Recirculation Pump (DP-202)

The alum recycle pump (DP-202) will be controlled locally with an "On/Off" selector switch.

6.6.2.3 Alum Addition Metering Pumps (MP-201 A/B)

The alum addition metering pumps will be controlled locally by a field-mounted "Local/Off/ Remote" switch, and remotely at the PLC by a "Hand/Off/Auto" selector switch. In the "Auto" position, the control of the alum addition metering pumps (MP-201 A/B) will be tied to the clarifier feed pumps. When one of the clarifier feed pumps is running (P-101 A/B/C), the alum addition metering pump (either MP-201A or MP-201B) will run. The pumps will be supplied with a speed controller which will interface through the PLC to adjust the metering pumps' speed automatically in order to maintain a preset chemical addition based on the flow rate to the clarifier as measured by FE-101.

When a metering pump fails, the system will switch to the alternate pump. If the alternate pump fails, the PLC will alarm and dial-out. The system will also alarm and dial-out on low-low level (LSLL-201) and high-high level (LSHH-201) within the alum feed tank.

6.6.2.4 Polymer Addition Metering Pumps (MP-202 A/B)

The polymer addition metering pumps will be controlled locally by a field-mounted "Local/Off/Remote" switch, and remotely at the PLC by a "Hand/Off/Auto" selector switch. In the "Auto" position, the control of the polymer addition metering pumps (MP-202A/B) will be tied to the clarifier feed pumps. When one of the clarifier feed pumps is running (P-101 A/B/C), a polymer addition metering pump (either MP-202A or MP-202B) will run. The pump will be supplied with a speed controller which will interface through the PLC to automatically adjust the metering pumps' speed in order to maintain a preset chemical addition based on the flow rate to the clarifier as measured by FE-101.

When a metering pump fails, the system will switch to the alternate pump. If the alternate pump fails, the PLC will alarm and dial-out.

6.6.2.5 Flash Mix Tank Mixer (MX-101)

The flash mix tank mixer will be controlled by an "On/Off" selector switch at the clarifier system. A "run" light will indicate mixer status at the PLC.

If the mixer fails, the alum and polymer may not be dispersed uniformly. If this occurs, the PLC will alarm and dial-out. The treatment process, however, will continue to operate.

6.6.2.6 Slow Mix Tank Mixer (MX-102)

The slow mix (flocculation) tank mixer will be controlled by a local "On/Off" selector switch, and a speed controller mounted locally. Speed control will be used locally to optimize floc formation in the tank. A "run" light will indicate mixer status at the PLC.

If the mixer fails, the polymer added to enhance the settling of suspended solids may not be dispersed uniformly. If this occurs, the PLC will alarm and dial-out. The treatment process, however, will continue to operate.

6.6.2.7 Clarifier Slurry Transfer Pump (DP-101)

The clarifier slurry transfer pump will be controlled locally by a field-mounted "Local/Off/Remote" switch, and remotely at the PLC by a "Hand/Off/Auto" selector switch. In normal operation, the pump

will operate on a timed run cycle. High-high level in the slurry holding tank (TK-101) will stop the pump and cause an alarm condition.

6.6.2.8 Slurry Recycle Pump (DP-102)

The slurry recycle pump will be controlled locally with an "On/Off" selector switch.

6.6.2.9 Slurry Transfer Pump (DP-103)

High and low levels will be measured with float switches located within TK-101. High level will start the slurry transfer pump and low level will stop the slurry transfer pump.

6.6.2.10Algaecide Metering Pump (MP-203)

The algaecide addition metering pump will be controlled by a field-mounted "On/Off" selector switch. The algaecide will be drawn from 55-gallon drums, and the metering pump's speed will be adjusted manually based on flow rate and required dosage.

6.6.3 Filtration Feed Pumps (P-301 A/B/C)

The filtration feed pumps will be controlled by a "Hand/Off/Auto" selector switch. In the "Auto" position, the pump operation will be controlled with a high level sensor (LSH-301) in CDF Cell #3 to start the pump, and a low level sensor (LSL-301) in CDF Cell #3 for normal pump stop. The filtration feed pumps will also shutdown on high pressure within the effluent line (PSH-301). Either high pressure at PSH-301 or high-high level (LSHH-301) in CDF Cell #3 will sound an alarm at the PLC and dial-out.

The flow rate will be monitored and recorded through an in-line flowmeter (FE-301) which will also be used to control the variable speed drives for the filtration feed pumps.

A redundant pump alternator will also be implemented in the PLC logic. This will be based on a pump on-off cycle and not on a timed run cycle. After a feed pump is stopped, the alternate feed pump will start the next time that a pump start is required. Since the system is to be left unattended at times, the pumps will be interlocked to shutdown with a low-low level sensor (LSLL-301) in CDF Cell #3 and high pressure (PSH-301) in the discharge line. When a feed pump fails, as indicated by a continuous high-high level (LSHH-301) signal in CDF Cell #3, the system will switch to the alternate pump. If the alternate pump also fails, and the high level continues, the PLC will alarm and dial-out.

6.6.4 Sand Filtration System (SF-301/302)

The sand filtration system will have its own ECP, locally mounted, provided by the manufacturer. The ECP will include a NEMA Type 4 enclosure with a main disconnect switch, branch circuit protection, a control transformer, motor starter with overloads, and factory mounted controls. Normal operation will be on a timed run cycle, as required, to maintain the filters relatively clean. The filter unit ECP will be equipped with a controlled automatic backwash cleaning system consisting of a differential pressure switch on each vessel that will initiate the backwash cleaning cycle as directed by the solids loading. The switch will be preset at a pressure recommended by the vendor (pounds per square inch). Backwash will also be able to be initiated manually. Backwash will be controlled locally at the filter ECP. The ECP will be equipped with a four-way switch to provide the following control: auto-timed mode, auto-pressure mode, off, and manual initiation of automatic backwash.

When any of the described initiate a backwash cycle, each of the filter elements will be backwashed sequentially. The backwash length will be adjustable, with the vendor recommending the normal time and/or a range of times.

6.6.5 Polishing Filtration System (PF-401/402)

The polishing filtration system will have its own ECP, locally mounted, provided by the manufacturer. The ECP will include a NEMA Type 4 enclosure with a main disconnect switch, branch circuit protection, a control transformer, and factory mounted controls. Normal operation will be on a timed run cycle, as required, to maintain the filters relatively clean. The ECP will alarm at the PLC on high differential pressure in any of the filter units, initiated by PDSH-401. The filter unit ECP will be equipped with a controlled automatic changing system consisting of a differential pressure switch on each vessel that will initiate the switching of a polishing filter vessel as directed by the solids loading. The switch will be preset at a pressure recommended by the vendor (pounds per square inch). Switching will also be able to be initiated manually. Change-out will be controlled locally at the filter ECP. The ECP will be equipped with a four-way switch to provide the following control: auto-timed mode, auto-pressure mode, off, and manual initiation of automatic change-out.

6.6.6 Granular Activated Carbon Adsorption System (LC-501/502/503)

No controls will be required for the GAC adsorption system. The influent pressure (PIT-501/502/503) to each carbon adsorption system will be monitored and recorded at the PLC. When high pressure is reached, an alarm will sound and the PLC will dial-out. In addition, the differential pressure across each carbon vessel will be monitored. Upon high differential pressure across either vessel, an alarm will sound at the PLC.

6.6.7 Auxiliary System Components

6.6.7.1 Flow Measurement and Control

Flow will be measured by flowmeters which will produce 4-20 mA DC signals that will indicate the liquid flow rate, locally and at the PLC. The flow rate indicators at the PLC will be programmed to indicate the instantaneous flow rates, record the daily minimum and maximum flow rates in gallons per minute, and record the total flow in gallons through the facility.

FE-101 will measure flow between CDF Cell #2 and the clarifier system, FE-301 will measure flow between CDF Cell #3 and the sand filtration system, and FE-501 will monitor the effluent flow from the WTP.

6.6.7.2 Turbidity Measurement and Control

The turbidity of the water will be measured with turbidity meters that will indicate the turbidity, locally and at the PLC. The turbidity indicators at the PLC will be programmed to indicate the instantaneous turbidity as well as record the daily minimum and maximum turbidities.

AE-301 will monitor the turbidity of the water entering the sand filtration system. AE-401 will monitor the turbidity of the water exiting the polishing filtration system.

6.6.7.3 Sump Pumps (P-601 A/B)

The sump pumps will be controlled by high-high (LSHH-601), high (LSH-601), and low level (LSL-601) switches in the building sump. The primary pump will automatically start on high level (LSH-601) in the sump, and shut off on low level. The backup pump will start on high-high level in the sump, and will cause an alarm (LAHH-601) when the pump starts. The high level will be set such that the backup pump will start if the primary pump has failed, or an unusually large volume of water has been discharged to the sump. Upon each start cycle, the alternate pump will start.

6.6.7.4 Compressed Air System (AC-701)

The compressed air system (AC-701) will be controlled by a "Hand/Off/Auto" selector switch. In the "Auto" position, the operation of the compressor will be controlled through the PLC with the compressor system normally on. A compressor "run" light will indicate compressor operation at the control panel, and compressor failure will cause an alarm in the PLC.

The compressed air system will be comprised of a pressure tank, duplex compressor arrangement, and a local ECP. The operation of the system will be controlled through the ECP which will start one of the compressors upon low pressure and stop the compressor on high pressure to maintain an operational pressure band in the pressure tank. The ECP will automatically alternate compressors on subsequent start/stop cycles. On low-low pressure, an alarm will be sent to the PLC indicating failure of the compressed air system.

6.7 Summary of Water Treatment System Alarms

A summary of the process control system alarms and dial-outs for each treatment component is provided below.

Clarifier System (CL-101)

- Low-Low Level (LSLL-101) in CDF Cell #2: LALL-101
- High-High Level (LSHH-101) in CDF Cell #2: LAHH-101
- High Pressure (PSH-101) in clarifier feed pump effluent line: PAH-101
- High-High Level (LSHH-102) in slurry holding tank: LAHH-102

Chemical Feed Systems

- Low-Low Level (LSLL-201) in alum feed tank: LALL-201
- High-High Level (LSHH-201) in alum feed tank: LAHH-201
- Low Level (LSL-202) in alum storage tank: LAL-202

Sand Filtration System (SF-301/302)

- Low-Low Level (LSLL-301) in CDF Cell #3: LALL-301
- High-High Level (LSHH-301) in CDF Cell #3: LAHH-301
- High Pressure (PSH-301) in filtration feed pump effluent line: PAH-301

Polishing Filtration System (PF-401/402)

- High Pressure (PSH-401) in influent line to polishing filters: PAH-401
- High Differential Pressure (i.e., PDSH-401) across PF-401A: PDAH-401

Liquid-Phase GAC Adsorption Systems (LC-501/502/503)

- High Pressure (i.e., PSH-501) in influent line to carbon vessels: PAH-501
- High-High Pressure (i.e., PSHH-501) in influent line to carbon vessels: PAHH-501
- High Differential Pressure (i.e., PDSH-501) across LC-501A: PDAH-501

Sump Pumps (P-601 A/B)

- High-High Level (LSHH-601) in building sump: LAHH-601

Air Compressor System (AC-701)

- Low-Low Pressure (PSLL-701) within compressor tank: PALL-701
- High Pressure (PSH-701) within tank: PAH-701

6.8 Summary of Water Treatment System Interlocks

A summary of the control interlocks for each treatment component is provided below.

Clarifier Feed Pumps (P-101 A/B/C)

- Low-Low Level (LSLL-101) in CDF Cell #2: LALL-101 (Interlock #1)
- High Pressure (PSH-101) in the effluent line: PAH-101 (Interlock #2)
- High-High Level (LSHH-301) in CDF Cell #3: LAHH-301 (Interlock #5)

Inclined Plate Clarifier (CL-101)

- High-High Level (LSHH-102) within the slurry holding tank: LAHH-102 (Interlock #3)

Filtration Feed Pumps (P-301 A/B/C)

- Low-Low Level (LSLL-301) in CDF Cell #3: LALL-301 (Interlock #4)
- High Pressure (PSH-301) in the discharge line: PAH-301 (Interlock #6)
- High Pressure (PSHH-501) in carbon adsorption system influent line: PAHH-501 (Interlock #7)

Sand Filtration System (SF-301/302)

- No Interlocks for the sand filtration system

Polishing Filtration System (PF-401/402)

- No Interlocks for polishing filtration system

Liquid-Phase GAC Adsorption System (LC-501/502/503)

- No Interlocks for carbon adsorption system

Auxiliary System Components

- No Interlocks for auxiliary system components

7.0 PROJECT SCHEDULE

The project schedule included in Appendix H was developed to fulfill the requirements of the BD/DA as defined in the scope of work for the design. The schedule includes completion of the design, preparation of work packages, receipt of subcontractor submittals, and performance of construction activities.

The following assumptions were made when developing the project schedule:

- Development of work packages for long lead items (clarifier and pre-engineered metal building) can begin concurrently with USACE-NED review of the 90% WTP design submittal;
- Modifications which are internal to the existing WTP can begin upon acceptance of final design drawings;
- WTP construction activities will begin in October 2002 to avoid potential weather delays; and
- Because dredging activities are scheduled to commence in September 2003, the startup and testing of the water treatment system must be completed by June 30, 2003.

8.0 TECHNICAL SPECIFICATIONS AND DESIGN DRAWINGS

The technical specifications are provided in Appendix F and design drawings are included as a separate attachment. Lists of both the technical specifications and design drawings are provided in Tables 8-1 and 8-2, respectively.

Table 8-1
List of Technical Specifications

DIVISION 01 – GENERAL REQUIREMENTS

01110	Summary of Work
01320	Project Schedule
01330	Submittal Procedures
01356	Stormwater Pollution Prevention Measures
01410	Environmental Protection
01451	Contractor Quality Control
01500	Construction Facilities and Temporary Controls
01720	Field Engineering
01780	Closeout Submittals

DIVISION 02 – SITE WORK

02230	Clearing and Grubbing
02315	Excavation, Filling and Backfilling for Structures
02316	Excavation, Filling and Backfilling for Utilities Systems
02531	Sanitary Sewers
02556	Gas Distribution System
02769	Protection and Modification of Existing Utilities

DIVISION 03 – CONCRETE

03100	Structural Concrete Formwork
03150	Expansion Joints, Contraction Joints, and Waterstops
03200	Concrete Reinforcement
03300	Cast-In-Place Structural Concrete

DIVISION 04 – MASONRY

04200	Masonry

DIVISION 05 – METALS

05120	Structural Steel
05500	Miscellaneous Metal

DIVISION 07 – THERMAL & MOISTURE PROTECTION

07840	Firestopping
07900	Joint Sealing

Table 8-1
List of Technical Specifications – *Continued*

DIVISION 08 – DOORS & WINDOWS

08110	Steel Doors and Frames
08330	Overhead Rolling Doors
08510	Steel Windows
08700	Builders' Hardware
08810	Glass and Glazing

DIVISION 09 – FINISHES

09250	Gypsum Wallboard
09510	Acoustical Ceilings
09650	Resilient Flooring
09900	Painting, General
09910	High Solids Thin Film Epoxy Flooring System
09930	Protective Coating System (Alum Storage Area)

DIVISION 10 – SPECIALTIES

10201	Metal Wall Louvers
10430	Exterior Signage
10440	Interior Signage
10800	Toilet Accessories

DIVISION 11 – EQUIPMENT

11240	Liquid-Phase Granulated Activated Carbon Adsorption System
11242	Chemical Feed Systems
11310	Pumps
11394	Sand Filtration System
11395	Polishing Filtration System
11540	Inclined Plate Clarifier

DIVISION 13 – SPECIAL CONSTRUCTION

13120	Standard Metal Building Systems
13405	Process Control
13850	Fire Detection and Alarm System

DIVISION 15 – MECHANICAL

15050	Basic Mechanical Materials and Methods
15080	Thermal Insulation for Mechanical Systems
15190	Gas Piping Systems
15200	Pipelines, Liquid Process Piping
15400	Plumbing, General Purpose

Table 8-1
List of Technical Specifications – *Continued*

15565	Heating System; Gas-Fired Heaters
15700	Unitary Heating and Cooling Equipment
15760	Terminal Heating and Cooling Units
15895	Air Supply, Distribution, Ventilation, and Exhaust System
15950	Heating, Ventilating and Air Conditioning (HVAC) Control Systems
15990	Testing, Adjusting, and Balancing of HVAC Systems

DIVISION 16 – ELECTRICAL

16050	Basic Electrical Materials and Methods
16261	Variable Frequency Drive Systems Under 600 Volts
16415	Electrical Work, Interior
16510	Interior Lighting

Table 8-2
List of Design Drawings

Drawing Number	Title
G-001	Cover Sheet and Index
G-002	Legend and Abbreviations
C-101	Site Plan
C-102	Site Grading Plan
C-103	Yard Piping/Utilities Plan
S-501	Foundation Floor Plan
D-601	Process Flow Diagram/Mass Balance
M-001	Piping Legend and Symbols
M-101	General Arrangement/Equipment Layout (Existing WTP)
M-102	General Arrangement/Equipment Layout (New WTP)
M-103	Mechanical Demolition Plan - Existing WTP
M-601	Piping and Instrumentation Diagram - Clarifier System
M-602	Piping and Instrumentation Diagram - Sand Filtration System
M-603	Piping and Instrumentation Diagram - Polishing Filtration System/Liquid-Phase Carbon Adsorption System
M-604	Piping and Instrumentation Diagram - Chemical Feed Systems
A-201	Architectural Elevations East and North and Structural Details
A-202	Architectural Elevations West and South
A-203	North Architectural Elevations for New and Existing WTP and Connecting Walkway
E-001	Electrical Legend and Symbols
E-101	Electrical Demolition Plan - Existing WTP
E-102	Electrical Service Plan
E-601	Single Line Diagram (Sheet 1 of 2)
E-602	Single Line Diagram (Sheet 2 of 2)

9.0 ACQUISITION STRATEGY

All work elements associated with the construction of the water treatment facility will be completed through a work package approach with Foster Wheeler acting as the General Contractor. The work packages for the construction will include all applicable technical specifications and design drawings prepared as part of the BD/DA.

A list of the work packages to be developed is presented in Table 9-1. Foster Wheeler will attempt to minimize the number of work packages to be developed by combining as many of the construction activities as possible. Currently it is anticipated that eleven (11) work packages will be prepared. In order to meet the current construction schedule for the WTP, however, it was necessary to prepare several work packages prior to submittal of the final BD/DA. These work packages included the inclined plate clarifier, pre-engineered metal building/foundation, and liquid-phase GAC adsorption system.

Table 9-1
Water Treatment Facility Work Packages

Work Package	Scope of Work
Pre-Engineered Metal Building/Foundation	Design, fabricate, deliver, and install pre-engineered metal building and associated foundation, floor slab, and equipment pads.
Mechanical	Demolish and dispose of existing water treatment facility equipment, curbing, concrete pads, process piping, and power and control wiring; offload and install process equipment; furnish and install chemical feed systems, process tanks, sump pumps, diaphragm pumps, air compressor, process piping, static mixer, and process instrumentation; install yard piping to include water, sewer, and gas; provide the materials, equipment, and labor to install the plumbing system; and design and install the HVAC system.
Electrical	Provide electric power, interior lighting, and electrical installation and wiring of the PLC, process equipment, equipment control panels, and process instrumentation.
Equipment (six separate work packages)	Prepare submittals, fabricate, furnish, and deliver the clarifier system, variable speed drive pumps, sand filtration system, polishing filtration system, liquid-phase GAC adsorption system, and PLC.
Analytical Laboratory	Chemical analysis of water treatment process samples and decontamination verification wipe samples.
Transportation and Disposal	Transportation and disposal of (1) demolished process piping, power and control wiring, and concrete at an appropriately permitted non-TSCA landfill; and (2) asphalt generated during site work at an appropriately permitted recycling facility.

10.0 REFERENCES

Department of the Army, Waterways Experiment Station, U.S. Army Corps of Engineers (USACE). *New Bedford Harbor Superfund Project, Acushnet River Estuary Engineering Feasibility Study of Dredging and Dredge Material Disposal Alternatives, Report 3 – Characterization and Elutriate Testing of Acushnet River Estuary Sediment*, March 1989.

Department of the Army, Waterways Experiment Station, U.S. Army Corps of Engineers (USACE). *New Bedford Harbor Superfund Project, Acushnet River Estuary Engineering Feasibility Study of Dredging and Dredge Material Disposal Alternatives, Report 7 – Settling and Chemical Clarification Tests*, November 1988.

Ebasco Services, Incorporated (Ebasco). *Draft Final Hot Spot Feasibility Study, New Bedford Harbor, Massachusetts*, July 1989.

ERM-New England, Inc. *Final Design Analysis for New Bedford Harbor/Hot Spot Operable Unit Superfund Site, New Bedford, Massachusetts*, November 1991.

Foster Wheeler Environmental Corporation (Foster Wheeler). *Draft Final Pre-design Field Test Dredge Technology Evaluation Report, New Bedford Harbor Superfund Site, New Bedford, Massachusetts*, July 2001.

Foster Wheeler Environmental Corporation (Foster Wheeler). *Draft Cost Benefit Analysis for Expansion of the Wastewater Treatment Plant at Operable Unit #1, New Bedford Harbor Superfund Site, New Bedford, Massachusetts*, May 2001.

Foster Wheeler Environmental Corporation (Foster Wheeler). *Final Technical Memorandum, Revision 2, Feasibility Investigation of Sediment Dewatering Alternatives, New Bedford Harbor Superfund Site, New Bedford, Massachusetts*, May 2001.

Foster Wheeler Environmental Corporation (Foster Wheeler). *Draft Wastewater Pilot-Scale Treatment Summary Report, New Bedford Harbor Superfund Site, New Bedford, Massachusetts*, January 2001.

Foster Wheeler Environmental Corporation (Foster Wheeler). *Draft Phase II Treatability Study for Operable Unit #1 Wastewater Treatment System, New Bedford Harbor Superfund Site, New Bedford, Massachusetts*, April 2000.

Foster Wheeler Environmental Corporation (Foster Wheeler). *Operable Unit #1 Wastewater Treatment System Treatability Studies at the New Bedford Harbor Superfund Site, New Bedford, Massachusetts*, December 1999.

U.S. Environmental Protection Agency – Region I, New England (USEPA). *New Bedford Harbor Superfund Site Hot Spot Operable Unit Final Draft Amended Record of Decision*, April 1999.

U.S. Environmental Protection Agency – Region I, New England (USEPA). *Record of Decision for the Upper and Lower Harbor Operable Unit, New Bedford Harbor Superfund Site, New Bedford, Massachusetts*, September 1998.

Appendix A

Summary of USACE/ERM Treatability Study Results

A1.0 Summary of Previous USACE Studies

From 1985 to 1988, the USACE conducted extensive studies on the upper estuary sediments to support the remedy for OU #2. As part of these studies, the USACE performed laboratory and bench scale tests to gather technical data for predicting the behavior of the dredged sediments when placed in a confined disposal facility (CDF). The results of this *Engineering Feasibility Study* (EFS) are presented in a series of twelve reports prepared by the USACE's Waterways Experiment Station (WES) and New England District (NED). The pertinent results from those reports as they relate to water treatment are presented below.

A1.1 Settleability

The USACE conducted modified elutriate tests with a composite sediment sample (2,167 mg/kg total PCBs) from the upper estuary of the New Bedford Harbor. The primary purpose of this testing was to predict CDF effluent quality from the dredging and CDF disposal. The settling test evaluated a slurry concentration of approximately 140 g/l (6% by volume, 15% by weight). The TSS concentration in the supernatant after 24 hours of settling was determined to be 320 mg/l and the PCB concentration was 0.22 mg/l. Filtered (0.45 μm filter) samples of the supernatant had a PCB concentration of 0.11 mg/l. Retention times beyond 40 hours provided little additional improvement in the TSS of the supernatant.

While the test results indicate that removal of suspended solids in the water will substantially reduce the PCB contaminant level in the water column, the PCB concentration was still above the discharge criteria. Therefore, additional treatment would be required to reduce the PCB concentrations to acceptable levels prior to discharge back into the estuary. The complete testing procedures and results for this treatability study can be found in *Report 3 – Characterization and Elutriate Testing of Acushnet River Estuary Sediment* (USACE, March 1989).

A1.2 Flocculation

Tests were performed by WES to evaluate the effectiveness of flocculation and filtration in reducing the PCB concentration in the CDF supernatant. Several different polymers were evaluated for suspended solids removal effectiveness. The test results indicate that the addition of Magnifloc 1586C at a concentration of 15 mg/l was effective in reducing the TSS of the supernatant 82% in laboratory test jars. The testing did not, however, evaluate the use of an inorganic flocculent such as alum or lime. The complete testing procedures and results for this treatability study can be found in *Report 7 – Settling and Chemical Clarification Tests* (USACE, November 1988).

A1.3 Carbon Adsorption/UV/Oxidation

A pilot scale activated carbon adsorption system and a UV/oxidation (hydrogen peroxide) system were evaluated using a representative water containing >80 μg/l PCBs. Activated carbon adsorption isotherms generated by WES for PCBs during the pilot scale studies demonstrated the effectiveness of activated carbon for the removal of soluble PCBs. The pilot scale UV/oxidation system also indicated effective destruction of soluble PCBs. However, overall PCB removal efficiencies for both of these systems were determined to be poor. The performance of both processes in the pilot scale studies were hindered by the elevated suspended solids concentrations of the water. The USACE concluded that the elevated suspended solids (with associated adsorbed PCBs) allowed dissolved PCBs to pass untreated with the particulate matter. In addition, it was learned more recently (2000) that the carbon adsorption tests were

conducted outside in subfreezing temperatures (<32 °F) which may have affected the performance of the activated carbon.

A2.0 Summary of Previous ERM Studies

In January 1991, based on the results of the USACE EFS, ERM conducted additional treatability studies to develop a design basis for a water treatment system, which would meet the discharge limits established for OU #2. These studies, which were performed with representative Hot Spot sediment, included evaluating sediment settling, flocculation, filtration, carbon adsorption and UV/oxidation systems. The studies were performed independently for each proposed water treatment system unit process to determine optimum design parameters and establish operating conditions. The studies were conducted in two phases. The first phase consisted of settling, flocculation and filtration testing and the second phase consisted of determining the most effective method for removing solids and verifying data generated in the first phase. The results of the ERM studies are summarized in the following sections.

A2.1 Settleability

Based on the treatability studies conducted by ERM, the following design parameters were developed for the existing WTP (OU #2):

Primary Settling – CDF Cell #1

It was determined that the dredged slurry (65 g/l, 2.6% by volume, 6% by weight) will settle within six (6) hours to a minimum supernatant suspended solids concentration of approximately 250 mg/l. The solids settled with a clean interface, and ERM concluded that solids carry over from the settled sediments would not represent a significant problem, provided the overflow weir was designed to minimize entrance velocities.

In addition, the treatability studies indicated that floating oil and debris will form at the surface of the water. During the studies, a sheen of oil and other debris (leaves, etc.) were present. The results of analysis performed during parallel studies by USACE-NED/WES indicated this oily sheen has elevated concentrations of PCBs.

Equalization – CDF Cell #2

Water entering the equalization tank (CDF Cell #2) was estimated to have a suspended solids concentration of 250 to 600 mg/l based on the treatability studies.

Secondary Settling – CDF Cell #3

The treatability study indicated that the secondary settling cell (CDF Cell #3) should have a minimum 15 minutes residence time. With this minimum detention time, the secondary clarifier could achieve very low suspended solids concentrations of below 10 mg/l.

A2.2 Flocculation/Filtration

Flocculation

Several flocculents and polymers were evaluated for suspended solids removal. These included Cat-Floc TS (Calgon Corporation), Magnifloc (American Cyanamid), alum, ferric chloride, lime, and ferrous sulfate. Based on these treatability studies, ERM determined that the suspended solids within the supernatant settled out quickly with the addition of 25 mg/l of alum. The TSS of the supernatant was reduced to approximately 5 mg/l.

Filtration

Filtration analyses were designed to simulate sand filter and microfilter effectiveness in reducing the solids concentration of the supernatant. Samples were dosed with the appropriate concentration of flocculent and then allowed to settle. The supernatant samples were then filtered through 10 and 2.5 micron filters. The test results indicated that a coarse filter (i.e., 10 micron) would be necessary prior to the polishing filter (2.5 micron) in order to minimize premature fouling of the polishing filter. A coarse filter would prolong the period of time required between polishing filter change-outs.

A2.3 UV/Oxidation

UV/oxidation bench scale design tests were performed by Peroxidation Systems, Inc. (PSI) (now a division of Calgon Carbon Corporation) on a supernatant provided by ERM. The supernatant was generated from a 6% by weight sediment slurry which was allowed to settle and the resultant supernatant was flocculated with alum (15 mg/l), settled for 15 minutes and filtered through a 2.5 μm filter. The TSS and PCB concentrations of the ERM supernatant as received by PSI were <20 mg/l and 80 μg/l, respectively. Due to the high iron concentration of the supernatant (12.5 mg/l), PSI then filtered the ERM supernatant again prior to conducting the UV/oxidation tests. The PSI filtered supernatant had TSS and PCB concentrations of <0.2 mg/l and 57 μg/l, respectively. The test results indicate that UV/oxidation is capable of reducing the PCB concentration from 57 μg/l to <5 μg/l (the laboratory detection limit). Based on the bench scale test data and PSI's previous experience, it was concluded that a PCB concentration of 0.6 μg/l could be achieved. The complete PSI Testing Report (February 1991) is presented in ERM's *Final Design Analysis for New Bedford Harbor/Hot Spot Operable Unit Superfund Site* (ERM, November 1991).

A2.4 Carbon Adsorption

Carbon adsorption isotherm tests were performed on supernatant treated with 25 mg/l alum and filtered through a 2.5 micron glass fiber filter. The PCB concentrations of the samples used during this test averaged 127.5 μg/l. Powdered activated carbon was then added at seven different doses ranging from 1 mg/l to 530.8 mg/l. The supernatant/carbon solution was then mixed, allowed to settle for 18 hours and then filtered through a 2.5 micron filter to remove the carbon.

The resultant isotherms indicate that in order to achieve the discharge requirement of 0.6 μg/l PCBs, a large quantity of carbon would be required. ERM concluded that this was the result of the PCBs adhering to minute solid particles that remained in solution after filtration. No TSS data is available from these studies.

B

Appendix B

Water Treatment Plant Effluent Data OU #2 (April 1994 to September 1995)

From April 1994 to September 1995, the existing WTP treated approximately 160 million gallons of supernatant from CDF Cell #1. The WTP operated as designed. In order to extend the change-out period for the polishing filters, however, the filter size was increased from 2.5 microns to 7-10 microns.

During the treatment operations, the PCB concentrations in the effluent were consistently below the detection limit of 0.25 µg/l. However, there were several exceedances of the daily discharge limits for chromium (two exceedances of the 12.8 ppb limit), copper (five exceedances of the 14.9 ppb limit), and lead (six exceedances of the 8.5 ppb limit). Since only one complete set of process samples was taken during the Hot Spot WTP operations, the treatment efficiency cannot be easily determined. The samples taken on July 27, 1995 indicate that the existing treatment system reduced the PCB concentration from 252 ppb to <0.25 ppb. A summary of the analytical results for PCBs and heavy metals from the Hot Spot operations are presented in the following tables.

PCB EFFLUENT DATA (ug/L) FOR EXISTING WTP - 1994/95
NEW BEDFORD HARBOR SUPERFUND SITE - OU#2

Sample Date	Aroclor							Comments
	1016	1221	1232	1242	1248	1254	1260	
4/29/94	0.25 U	0.25 U	0.25 U	0.25 U	0.25 U	0.25 U	0.25 U	
4/30/94	0.25 U	0.25 U	0.25 U	0.25 U	0.25 U	0.25 U	0.25 U	
5/1/94	0.25 U	0.25 U	0.25 U	0.25 U	0.25 U	0.25 U	0.25 U	
5/2/94	0.25 U	0.25 U	0.25 U	0.25 U	0.25 U	0.25 U	0.25 U	
5/3/94	0.25 U	0.25 U	0.25 U	0.25 U	0.25 U	0.25 U	0.25 U	
5/4/94	0.25 U	0.25 U	0.25 U	0.25 U	0.25 U	0.25 U	0.25 U	
5/5/94	0.25 U	0.25 U	0.25 U	0.25 U	0.25 U	0.25 U	0.25 U	
5/6/94	0.25 U	0.25 U	0.25 U	0.25 U	0.25 U	0.25 U	0.25 U	
5/12/94	0.25 U	0.25 U	0.25 U	0.25 U	0.25 U	0.25 U	0.25 U	
5/13/94	12	2.5 U	2.5 U	2.5 U	2.5 U	2.5 U	2.5 U	Informational Purposes Only. (Polishing Filter Effluent)
5/17/94	0.25 U	0.25 U	0.25 U	0.25 U	0.25 U	0.25 U	0.25 U	
5/20/94	0.25 U	0.25 U	0.25 U	0.25 U	0.25 U	0.25 U	0.25 U	
5/27/94	4.3	0.25 U	0.25 U	0.25 U	0.25 U	0.25 U	0.25 U	
5/29/94	0.25 U	0.25 U	0.25 U	0.25 U	0.25 U	0.25 U	0.25 U	
6/2/94	<0.5	<0.5	<0.5	<0.5	<0.5	<0.5	<0.5	Detection limit 0.5 ug/L, 15 hour composite
6/5/94	0.24 U	0.49 U	0.24 U	0.24 U	0.24 U	0.24 U	0.24 U	
6/10/94	0.27 U	0.54 U	0.27 U	0.27 U	0.27 U	0.27 U	0.27 U	
6/14/94	0.25 U	0.25 U	0.25 U	0.25 U	0.25 U	0.25 U	0.25 U	
6/17/94	0.25 U	0.25 U	0.25 U	0.25 U	0.25 U	0.25 U	0.25 U	
6/21/94	0.26 U	0.52 U	0.26 U	0.26 U	0.26 U	0.26 U	0.26 U	
7/2/94	0.26 U	0.26 U	0.26 U	0.26 U	0.26 U	0.26 U	0.26 U	
7/29/94	0.24 U	0.24 U	0.24 U	0.24 U	0.24 U	0.24 U	0.24 U	
8/10/94	0.24 U	0.47 U	0.24 U	0.24 U	0.24 U	0.24 U	0.24 U	
8/13/94	0.24 U	0.24 U	0.24 U	0.24 U	0.24 U	0.24 U	0.24 U	
8/16/94	0.24 U	0.24 U	0.24 U	0.24 U	0.24 U	0.24 U	0.24 U	8 Hr Composite Sample Without Polishing Filters
8/17/94	0.24 U	0.24 U	0.24 U	0.24 U	0.24 U	0.24 U	0.24 U	
8/19/94	0.24 U	0.24 U	0.24 U	0.24 U	0.24 U	0.24 U	0.24 U	20 Hr Composite Sample w/ 2 Micron Filters
8/19/94	12	0.24 U	0.24 U	0.24 U	0.24 U	0.24 U	0.24 U	Sand Filter Effluent
8/23/94	0.61	0.24 U	0.24 U	0.24 U	0.24 U	0.24 U	0.24 U	
8/26/94	0.25 U	0.25 U	0.25 U	0.25 U	0.25 U	0.25 U	0.25 U	

Sample Date	Aroclor							Comments
	1016	1221	1232	1242	1248	1254	1260	
8/29/94	0.25 U	0.25 U	0.25 U	0.25 U	0.25 U	0.25 U	0.25 U	
9/1/94	0.25 U	0.25 U	0.25 U	0.25 U	0.25 U	0.25 U	0.25 U	
9/4/94	0.28 U	0.28 U	0.28 U	0.28 U	0.28 U	0.28 U	0.28 U	
9/9/94	0.24 U	0.24 U	0.24 U	0.24 U	0.24 U	0.24 U	0.24 U	
9/12/94	0.25 U	0.25 U	0.25 U	0.25 U	0.25 U	0.25 U	0.25 U	
9/15/94	0.25 U	0.25 U	0.25 U	0.25 U	0.25 U	0.25 U	0.25 U	
9/18/94	0.25 U	0.25 U	0.25 U	0.25 U	0.25 U	0.25 U	0.25 U	
9/22/94	0.25 U	0.25 U	0.25 U	0.25 U	0.25 U	0.25 U	0.25 U	
9/26/94	0.25 U	0.25 U	0.25 U	0.25 U	0.25 U	0.25 U	0.25 U	
9/29/94	0.24 U	0.24 U	0.24 U	0.24 U	0.24 U	0.24 U	0.24 U	
10/2/94	0.25 U	0.25 U	0.25 U	0.25 U	0.25 U	0.25 U	0.25 U	
10/5/94	0.24 U	0.24 U	0.24 U	0.24 U	0.24 U	0.24 U	0.24 U	
10/12/94	0.25 U	0.25 U	0.25 U	0.25 U	0.25 U	0.25 U	0.25 U	Surrogate Recoveries not within CDAP Limits
10/12/94	0.25 U	0.25 U	0.25 U	0.25 U	0.25 U	0.25 U	0.25 U	Rerun
10/15/94	0.25 U	0.25 U	0.25 U	0.25 U	0.25 U	0.25 U	0.56	1260 detected in Blank
10/15/94	0.25 U	0.25 U	0.25 U	0.25 U	0.25 U	0.25 U	0.58	Rerun 1260 still detected in Blank Poss Lab contamin
10/15/94	0.25 U	0.25 U	0.25 U	0.25 U	0.25 U	0.25 U	0.25 U	
10/15/94	0.25 U	0.25 U	0.25 U	0.25 U	0.25 U	0.25 U	0.25 U	
10/19/94	0.25 U	0.25 U	0.25 U	0.25 U	0.25 U	0.25 U	0.25 U	Surrogate Recoveries not within CDAP Limits
10/19/94	0.25 U	0.25 U	0.25 U	0.25 U	0.25 U	0.25 U	0.25 U	Rerun
10/22/94	0.25 U	0.25 U	0.25 U	0.25 U	0.25 U	0.25 U	0.25 U	Surrogate Recoveries not within CDAP Limits
10/22/94	0.25 U	0.25 U	0.25 U	0.25 U	0.25 U	0.25 U	0.25 U	Rerun
10/25/94	0.25 U	0.25 U	0.25 U	0.25 U	0.25 U	0.25 U	0.25 U	Surrogate Recoveries not within CDAP Limits
10/25/94	0.25 U	0.25 U	0.25 U	0.25 U	0.25 U	0.25 U	0.25 U	Rerun
10/31/94	0.32 U	0.32 U	0.32 U	0.32 U	0.32 U	0.32 U	0.32 U	Surrogate Recoveries not within CDAP Limits
11/4/94	0.25 U	0.25 U	0.25 U	0.25 U	0.25 U	0.25 U	0.25 U	Surrogate Recoveries not within CDAP Limits
11/6/94	0.25 U	0.25 U	0.25 U	0.25 U	0.25 U	0.25 U	0.25 U	Surrogate Recoveries not within CDAP Limits
11/11/94	0.25 U	0.25 U	0.25 U	0.25 U	0.25 U	0.25 U	0.25 U	
11/17/94	0.25 U	0.25 U	0.25 U	0.25 U	0.25 U	0.25 U	0.25 U	
11/20/94	0.25 U	0.25 U	0.25 U	0.25 U	0.25 U	0.25 U	0.25 U	
11/28/94	0.25 U	0.25 U	0.25 U	0.25 U	0.25 U	0.25 U	0.25 U	
12/1/94	0.25 U	0.25 U	0.25 U	0.25 U	0.25 U	0.25 U	0.25 U	
12/3/94	0.25 U	0.25 U	0.25 U	0.25 U	0.25 U	0.25 U	0.25 U	

Sample Date	Aroclor							Comments
	1016	1221	1232	1242	1248	1254	1260	
12/4/94	0.25 U	0.25 U	0.25 U	0.25 U	0.25 U	0.25 U	0.25 U	
12/7/94	0.25 U	0.25 U	0.25 U	0.25 U	0.25 U	0.25 U	0.25 U	
12/10/94	0.25 U	0.25 U	0.25 U	0.25 U	0.25 U	0.25 U	0.25 U	
12/14/94	0.25 U	0.25 U	0.25 U	0.25 U	0.25 U	0.25 U	0.25 U	
12/17/94	0.25 U	0.25 U	0.25 U	0.25 U	0.25 U	0.25 U	0.25 U	
12/21/94	0.25 U	0.25 U	0.25 U	0.25 U	0.25 U	0.25 U	0.25 U	
12/26/94	0.25 U	0.25 U	0.25 U	0.25 U	0.25 U	0.25 U	0.25 U	
1/5/95	0.25 U	0.25 U	0.25 U	0.25 U	0.25 U	0.25 U	0.25 U	
1/18/95	0.25 U	0.25 U	0.25 U	0.25 U	0.25 U	0.25 U	0.25 U	
1/21/95	0.25 U	0.25 U	0.25 U	0.25 U	0.25 U	0.25 U	0.25 U	
1/26/95	0.25 U	0.25 U	0.25 U	0.25 U	0.25 U	0.25 U	0.25 U	
1/30/95	0.25 U	0.25 U	0.25 U	0.25 U	0.25 U	0.25 U	0.25 U	
2/3/95	0.25 U	0.25 U	0.25 U	0.25 U	0.25 U	0.25 U	0.25 U	
2/6/95	0.25 U	0.25 U	0.25 U	0.25 U	0.25 U	0.25 U	0.25 U	
2/24/95	0.25 U	0.25 U	0.25 U	0.25 U	0.25 U	0.25 U	0.25 U	
3/2/95	0.25 U	0.25 U	0.25 U	0.25 U	0.25 U	0.25 U	0.25 U	Surrogate Recoveries not within CDAP Limits
3/7/95	0.25 U	0.25 U	0.25 U	0.25 U	0.25 U	0.25 U	0.25 U	Surrogate Recoveries not within CDAP Limits
3/14/95	0.25 U	0.25 U	0.25 U	0.25 U	0.25 U	0.25 U	0.25 U	
3/18/95	0.25 U	0.25 U	0.25 U	0.25 U	0.25 U	0.25 U	0.25 U	
3/23/95	0.25 U	0.25 U	0.25 U	0.25 U	0.25 U	0.25 U	0.25 U	Surrogate Recoveries not within CDAP Limits
3/29/95	0.25 U	0.25 U	0.25 U	0.25 U	0.25 U	0.25 U	0.25 U	Surrogate Recoveries not within CDAP Limits
4/1/95	0.25 U	0.25 U	0.25 U	0.25 U	0.25 U	0.25 U	0.25 U	
4/6/95	0.25 U	0.25 U	0.25 U	0.25 U	0.25 U	0.25 U	0.25 U	
4/11/95	0.25 U	0.25 U	0.25 U	0.25 U	0.25 U	0.25 U	0.25 U	
4/17/95	0.25 U	0.25 U	0.25 U	0.25 U	0.25 U	0.25 U	0.25 U	
4/20/95	0.25 U	0.25 U	0.25 U	0.25 U	0.25 U	0.25 U	0.25 U	
4/25/95	0.25 U	0.25 U	0.25 U	0.25 U	0.25 U	0.25 U	0.25 U	
4/28/95	0.25 U	0.25 U	0.25 U	0.25 U	0.25 U	0.25 U	0.25 U	
5/3/95	0.25 U	0.25 U	0.25 U	0.25 U	0.25 U	0.25 U	0.25 U	
5/7/95	0.25 U	0.25 U	0.25 U	0.25 U	0.25 U	0.25 U	0.25 U	
5/12/95	0.25 U	0.25 U	0.25 U	0.25 U	0.25 U	0.25 U	0.25 U	
5/15/95	0.25 U	0.25 U	0.25 U	0.25 U	0.25 U	0.25 U	0.25 U	Surrogate Recoveries not within CDAP Limits
5/18/95	0.25 U	0.25 U	0.25 U	0.25 U	0.25 U	0.25 U	0.25 U	

Sample Date	Aroclor							Comments
	1016	1221	1232	1242	1248	1254	1260	
5/21/95	0.25 U	0.25 U	0.25 U	0.25 U	0.25 U	0.25 U	0.25 U	
6/1/95	0.25 U	0.25 U	0.25 U	0.25 U	0.25 U	0.25 U	0.25 U	
6/4/95	0.25 U	0.25 U	0.25 U	0.25 U	0.25 U	0.25 U	0.25 U	
6/8/95	0.25 U	0.25 U	0.25 U	0.25 U	0.25 U	0.25 U	0.25 U	
6/13/95	0.25 U	0.25 U	0.25 U	0.25 U	0.25 U	0.25 U	0.25 U	
6/17/95	0.25 U	0.25 U	0.25 U	0.25 U	0.25 U	0.25 U	0.25 U	
6/21/95	0.25 U	0.25 U	0.25 U	0.25 U	0.25 U	0.25 U	0.25 U	
6/29/95	0.25 U	0.25 U	0.25 U	0.25 U	0.25 U	0.25 U	0.25 U	95-G-1, 001. Sample point not indicated.
6/29/95	306	5.0 U	5.0 U	5.0 U	5.0 U	89	5.0 U	95-G2/1, 002. Sample point not indicated.
6/29/95	0.25 U	0.25 U	0.25 U	0.25 U	0.25 U	0.25 U	0.25 U	95-G, 003. Sample point not indicated.
6/29/95	355	5.0 U	5.0 U	5.0 U	5.0 U	105	5.0 U	95-G2, 004. Sample point not indicated.
6/29/95	0.25 U	0.25 U	0.25 U	0.25 U	0.25 U	0.25 U	0.25 U	95-C, 001. Sample point not indicated.
7/2/95	0.25 U	0.25 U	0.25 U	0.25 U	0.25 U	0.25 U	0.25 U	
7/7/95	0.25 U	0.25 U	0.25 U	0.25 U	0.25 U	0.25 U	0.25 U	
7/11/95	0.25 U	0.25 U	0.25 U	0.25 U	0.25 U	0.25 U	0.25 U	
7/14/95	0.25 U	0.25 U	0.25 U	0.25 U	0.25 U	0.25 U	0.25 U	
7/18/95	0.25 U	0.25 U	0.25 U	0.25 U	0.25 U	0.25 U	0.25 U	
7/21/95	0.25 U	0.25 U	0.25 U	0.25 U	0.25 U	0.25 U	0.25 U	
7/24/95	0.25 U	0.25 U	0.25 U	0.25 U	0.25 U	0.25 U	0.25 U	
7/25/95	0.25 U	0.25 U	0.25 U	0.25 U	0.25 U	0.25 U	0.25 U	
7/27/95	232	0.25 U	0.25 U	0.25 U	0.25 U	0.25 U	0.25 U	Total PCB Influent (SP03)
7/27/95	1.4	0.25 U	0.25 U	0.25 U	0.25 U	0.25 U	0.25 U	Soluble PCB Influent (SP03)
7/27/95	27	0.25 U	0.25 U	0.25 U	0.25 U	0.25 U	0.25 U	Total PCB (SP07) Settling basin (CDF #3) effluent
7/27/95	0.25 U	0.25 U	0.25 U	0.25 U	0.25 U	0.25 U	0.25 U	Soluble PCB (SP07)
7/27/95	12	0.25 U	0.25 U	0.25 U	0.25 U	0.25 U	0.25 U	Total PCB (SP11) UV/Ox Influent
7/27/95	0.25 U	0.25 U	0.25 U	0.25 U	0.25 U	0.25 U	0.25 U	Soluble PCB (SP11)
7/29/95	0.25 U	0.25 U	0.25 U	0.25 U	0.25 U	0.25 U	0.25 U	
8/1/95	0.25 U	0.25 U	0.25 U	0.25 U	0.25 U	0.25 U	0.25 U	
8/4/95	0.25 U	0.25 U	0.25 U	0.25 U	0.25 U	0.25 U	0.25 U	
8/7/95	0.25 U	0.25 U	0.25 U	0.25 U	0.25 U	0.25 U	0.25 U	
8/10/95	0.25 U	0.25 U	0.25 U	0.25 U	0.25 U	0.25 U	0.25 U	
8/14/95	0.25 U	0.25 U	0.25 U	0.25 U	0.25 U	0.25 U	0.25 U	
8/17/95	0.25 U	0.25 U	0.25 U	0.25 U	0.25 U	0.25 U	0.25 U	

Sample Date	Aroclor							Comments
	1016	1221	1232	1242	1248	1254	1260	
8/23/95	0.25 U	0.25 U	0.25 U	0.25 U	0.25 U	0.25 U	0.25 U	
8/30/95	0.25 U	0.25 U	0.25 U	0.25 U	0.25 U	0.25 U	0.25 U	
9/5/95	0.25 U	0.25 U	0.25 U	0.25 U	0.25 U	0.25 U	0.25 U	Surrogate Recoveries not within CDAP Limits
9/12/95	0.25 U	0.25 U	0.25 U	0.25 U	0.25 U	0.25 U	0.25 U	

U = Analyzed, Not Detected

Metals Effluent Data (ug/l) for Existing WTP - 1994/95

New Bedford Harbor Superfund Site - OU#2

Date	Cd	Cr	Cu	Cu (Sol)	Pb(Total)	Pb(Sol.)	Remarks
04/29/1994	5.0 U	3.5 J	7.7 J		3		
04/30/1994	5.0 U	3.5 U	12		2.0 J		
05/01/1994	1.4 J	10.0 U	9.2		0.9 J		
05/02/1994	5.0 U	10.0 U	15		2.4		
05/03/1994	5.0 U	10.0 U	13		0.9 J		
05/04/1994	1.9 J	10.0 U	14		2.5 J		
05/05/1994	1.7 J	10.0 U	12		1.9 J		
05/06/1994	1.0 J	10.0 U	13		2.4 J		
05/13/1994	5.0 U	10.0 U	6.6 J		3.0 U		COMPOSITE
"	5.0 U	10.0 U	7.1 J		3.0 U		GRAB
05/14/1994	5.0 U	10.0 U	7.8 J		2.5 J		
05/12/1994	2.1 J	10.0 U	9.4		3.0 U		
05/18/1994	5.0 U	10.0 U	15		3.0 U		
05/20/1994	0.9 J	10.0 U	11		3.0 U		
05/27/1994	5.0 U	10.0 U	12		3.0 U		
06/02/1994	1.6 J	10.0 U	9.1		4.5		
06/05/1994	1.1 J	10.0 U	2.6 J		3.0 U		
06/10/1994	1.1 J	10.0 U	8.0 U		6.0 U		
06/17/1994	3.4 J	10.0 U	4.0 J		15.0 U		
06/14/1994	2.4 J	10.0 U	9.5		6.0 J		
06/21/1994	1.8 J	10.0 U	4.7 J		6.4 J		
06/25/1994	3.0 J	2.5 J	8.1		10		
07/02/1994	2.4 J	10.0 U	1.9 J		4.7		
07/11/1994	2.7 J	10.0 U	5.5 J		2.9 J		
07/30/1994	1.1 J	10.0 U	8.0 U		2.1 J		
08/10/1994	2.5 J	10.0 U	5.0 J		3.7		
08/12/1994	1.4 J	10.0 U	8.0 U		2.2 J		
08/14/1994	1.6 J	10.0 U	3.3 J		0.7 J		
08/17/1994	3.4 J	10.0 U	2.6 J		2.5 J		
08/19/1994	2.4 J	10.0 U	8.0 U		3.7		20 HOUR COMP. SAMPLE W/2 MICRON FILTERS
"	2.7 J	10.0 U	8.0 U		2.2 J		9 HOUR COMP. SAMPLE W/7 MICRON FILTERS
"	1.8 J	10.0 U	4.2 J		2.2 J		SAND FILTER EFFLUENT-GRAB SAMPLE
08/23/1994	2.9 J	10.0 U	8.0 U		1.5 J		
08/25/1994	3.1 J	3.5 J	4.3 J		3.0 U		
08/27/1994	4.0 J	10.0 U	3.6 J		1.6 J		
08/29/1994	1.4 J	10.0 U	5.1 J		2.2 J		
08/31/1994	1.1 J	5.1 J	40		0.81 J		
09/02/1994	2.9 J	10.0 U	14		1.3 J		
09/04/1994	2.6 J	10.0 U	16		2.6 J		
08/31/1994			8.0 U				GRAB SAMPLE OF COPPER ONLY
09/08/1994	1.4 J	10.0 U	2.2 J		3.8		
09/10/1994	2.9 J	10.0 U	2.9 J		2.9 J		
09/11/1994			3.5 J	4.1 J			GRAB SAMPLE AT POINT 12 FOR COPPER ONLY
09/09/1994			5.2 J	4.1 J			GRAB SAMPLE AT POINT 12 FOR COPPER ONLY
09/12/1994	2.8 J	10.0 U	8.0 U		2.6 J		
09/14/1994	2.3 J	10.0 U	8.0 U		0.78 J		
09/18/1994	2.8 J	10.0 U	8.0 U		3.0 U		
09/16/1994	2.7 J	10.0 U	8.0 U		1.6 J		
09/21/1994	1.8 J	2.6 J	2.2 J		0.73 J		
09/23/1994	2.2 J	10.0 U	8.0 U		3.0 U		

Metals Effluent Data (ug/l) for Existing WTP - 1994/95

New Bedford Harbor Superfund Site - OU#2

Date	Cd	Cr	Cu	Cu (Sol)	Pb(Total)	Pb(Sol.)	Remarks
09/26/1994	2.7 J	10.0 U	8.0 U		2.2 J		
09/28/1994	3.4 J	10.0 U	2.9 J		1.9 J		
09/30/1994	2.3 J	10.0 U	3.7 J		1.0 J		
10/02/1994	4.1 J	10.0 U	3.4 J		1.0 J		
10/04/1994	2.1 J	10.0 U	13		0.75 J		
10/10/1994	2.1 J	10.0 U	8.0 U		3.0 U		
10/14/1994	1.4 J	10.0 U	4.4 J		2.0 J		
10/19/1994	2.6 J	10.0 U	8.0 U		0.91 J		
10/21/1994	2.3 J	10.0 U	6.2 J		2.3 J		
10/25/1994	3.1 J	2.8 J	5.6 J		1.1 J		
10/29/1994	3.5 J	10.0 U	8.0 U		1.4 J		
10/12/1994	2.5 J	10.0 U	8.0 U		0.59 J		
10/16/1994	3.2 J	10.0 U	3.0 J		3.0 U		
10/23/1994	3.1 J	10.0 U	8.0 U		4.4		
10/27/1994	2.5 J	10.0 U	8.0 U		1.1 J		
11/02/1994	3.0 J	10.0 U	8.0 U		1.5 J		
11/06/1994	3.3 J	10.0 U	3.2 J		1.6 J		
11/04/1994	1.3 J	10.0 U	3.5 J		3.0 U		
11/10/1994	3.2 J	10.0 U	5.3 J		2.6 J		
10/31/1994	3.5 J	28	8.0 U		0.62 J		
11/12/1994	4.4 J	45	5.2		3.3		
11/17/1994	3.3 J	12	8.0 U		2.5 J		
11/18/1994	2.9 J	10.0 U	7.3 J		2.8 J		
11/19/1994	2.2 J	10.0 U	8.0 U		6.4		
11/26/1994	3.9 J	10.0 U	8.0 U		8.5		
11/28/1994	3.8 J	10.0 U	8.0 U		6.1		
11/30/1994	3.3 J	10.0 U	8.0 U		7.1		
12/02/1994	1.0 J	10.0 U	3.0 J		6.2		
12/04/1994	3.5 J	10.0 U	11		12		
12/06/1994	3.3 J	10.0 U	8.0 U		11		
12/08/1994	5.0 U	10.0 U	6.9 J		4.8		
12/10/1994	2.6 J	10.0 U	4.3 J		14		
12/13/1994					8.3	3.6	LEAD ONLY
12/15/1994	5.0 U	3.1 J	8.0 U		4.8	3.4	
12/17/1994	2.5 J	10.0 U	6.2 J		10	7.4	
12/20/1994	2.4 J	10.0 U	2.8 J		9.3	5.2	
12/22/1994	1.9 J	10.0 U	13		16	9	
12/28/1994	1.6 J	10.0 U	4.2 J		5.1	2.7	
12/31/1994	2.1 J	10.0 U	8.0 U		4.5	2.6	
12/26/1994	3.2 J	10.0 U	6.0 J		4.9	2.0 J	
01/19/1995	5.0 U	4.6 J	8.0 U		4.5	2.6	
01/05/1995	2.3 J	10.0 U	9.1		10	5.4	
01/21/1995	5.0 U	10.0 U	8.0 U		3.5	3	
01/27/1995	1.3 J	10.0.U	8.0 U		5.1	2.9	
01/17/1995	1.1 J	6.6 J	9.4 J		3.8	2.5 J	
02/04/1995						3.8	LEAD ONLY, 10 MICRON FILTERS
02/06/1995	3.8 J	10.0 U	8.0 U		4.6	2.4	
01/25/1995	2.0 J	10.0 U	6.5 J		1.4 J	1.4 J	
01/30/1995	2.0 J	10.0 U	5.4 J		5.9	2.4	
02/02/1995	2.5 J	10.0 U	5.8 J		6.1		
02/23/1995	1.2 J	10.0 U	4.9 J		4.3		
02/27/1995	1.7 J	10.0 U	4.3 J		2.4 J		

Metals Effluent Data (ug/l) for Existing WTP - 1994/95

New Bedford Harbor Superfund Site - OU#2

Date	Cd	Cr	Cu	Cu (Sol)	Pb(Total)	Pb(Sol.)	Remarks
03/05/1995	2.8 J	7.4 J	5.6 J		10		
03/11/1995	1.1 J	10.0 U	5.7 J		2.4 J		
03/02/1995	1.6 J	10.0 U	11		8		
03/14/1995	1.7 J	10.0 U	4.3 J		4		
03/17/1995	1.4 J	10.0 U	7.0 J		1.3 J		
03/25/1995	1.8 J	10.0 U	2.8 J		1.5 J		
03/30/1995	5.0 U	10.0 U	8.0 U		3.0 U		
04/03/1995	1.3 J	10.0 U	8.0 U		3		
04/06/1995	3.0 J	10.0 U	1.5 J		3.1		
03/23/1995	5.0 U	10.0 U	3.3 J		4		
04/11/1995	2.1 J	10.0 U	8.0 U		0.96 J		
04/01/1995	2.3 J	10.0 U	8.0 U		3.0 U		
04/15/1995	1.8 J	10.0 U	2.8 J		3.3		
04/18/1995	2.4 J	10.0 U	6.2 J		6.1		
04/20/1995	1.1 J	10.0 U	8.0 U		3		
04/24/1995	4.8 J	10.0 U	8.0 U		4.6		
04/26/1995	3.1 J	10.0 U	2.3 J		8.3		
04/28/1995	2.7 J	10.0 U	8.0 U		1.3 J		
05/02/1995	2.0 J	10.0 U	4.5 J		4.3		
05/04/1995	2.6 J	10.0 U	2.4 J		4		
05/07/1995	2.8 J	10.0 U	3.3 J		3.5		
05/11/1995	1.2 J	10.0 U	13		4		
05/13/1995	2.2 J	2.8 J	8.0 U		3.2		
05/15/1995	2.9 J	2.3 J	2.3 J		6.2		
05/17/1995	2.4 J	10.0 U	1.6 J		6.4		
05/19/1995	2.5 J	10.0 U	1.8 J		5.7		
05/21/1995	1.6 J	1.3 J	1.7 J		2.4 J		
05/30/1995	2.5 J	2.6 J	3.4 J		1.3 J		
06/02/1995	5.0 U	10.0 U	3.8 J		1.4 J		
06/04/1995	5.0 U	10.0 U	8.0 U		5.7		
06/07/1995	2.0 J	6.1 J	6.9 J		4.4		
06/09/1995	5.0 U	10.0 U	3.4 J		4.3		
06/13/1995	5.0 U	10.0 U	10		7.7		
06/16/1995	5.0 U	10.0 U	6.6 J		7.5		
06/18/1995	3.2 J	10.0 U	4.3 J		6.7		
06/21/1995	2.1 J	10.0 U	6.2 J		3.2		
06/23/1995	1.5 J	10.0 U	6.4 J		5.5		
06/25/1999	3.2 J	7.0 J	4.0 J		2.9 J		
06/29/1995	5.0 U	10.0 U	8.0 U		3.1		
07/01/1995	5.0 U	10.0 U	8.0 U		3.0 U		
07/03/1995	1.4 J	10.0 U	8.0 U		0.78 J		
07/07/1995	5.0 U	10.0 U	8.0 U		6.8		
07/09/1995	1.8 J	10.0 U	8.0 U		2.8 J		
07/12/1995	2.7 J	10.0 U	8.0 U		1.5 J		
07/14/1995	2.0 J	10.0 U	8.0 U		2.1 J		
07/17/1995	2.6 J	3.3 J	8.0 U		5.3		
07/19/1995	5.0 U	10.0 U	7.8 J		3.2		
07/21/1995	2.5 J	2.8 J	4.2 J		3.0 U		
07/24/1995	1.7 U	10.0 U	2.9 J		3.0 U		
07/26/1995	2.8 J	10.0 U	8.0 U		0.74 J		
07/29/1995	1.5 J	10.0 U	4.2 J		1.6 J		
07/31/1995	2.3 J	10.0 U	3.6 J		0.76 J		

Metals Effluent Data (ug/l) for Existing WTP - 1994/95

New Bedford Harbor Superfund Site - OU#2

Date	Cd	Cr	Cu	Cu (Sol)	Pb(Total)	Pb(Sol.)	Remarks
08/02/1995	2.9 J	10.0 U	8.0 U		0.77 J		
08/04/1995	1.5 J	10.0 U	8.0 U		1.6 J		
08/06/1995	1.9 J	10.0 U	8.0 U		1.0 J		
08/08/1995	5.0 U	2.5 J	8.0 U		1.2 J		
08/10/1995	1.6 J	4.7 J	8.0 U		0.8 J		
08/12/1995	2.1 J	10.0 U	8.0 U		3.0 U		
08/15/1995	5.0 U	10.0 U	8.0 U		3.0 U		
08/17/1995	1.8 J	10.0 U	8.0 U		3.0 U		
08/19/1995	2.0 J	10.0 U	8.0 U		2.3 J		
08/24/1995	1.7 J	10.0 U	8.0 U		4.1		
08/26/1995	2.5 J	10.0 U	8.0 U		1.3 J		
08/29/1995	3.6 J	10.0 U	8.0 U		1.5 J		
08/31/1995	2.4 J	10.0 U	8.0 U		1.8 J		
09/05/1995	1.9 J	10.0 U	8.6		1.5 J		
09/08/1995	2.6 J	10.0 U	8.0 U		3.0 J		
09/13/1995	2.3 J	10.0 U	8.0 U		2.9 J		
09/20/1995	5.0 U	10.0 U	8.0 U		3.9		

END OF WATER TREATMENT, PLANT MOTHBALLED

U =Non Detected
J =Estimated Value

Appendix C

Foster Wheeler Environmental Treatability Studies/Pilot Tests

WTP Performance Testing – April/May 1999
New Bedford Harbor Superfund Site

Sample Identification Definition

WTP-440-03-01:	WTP	= Water Treatment Plant
	440	= Test #440
	03	= Sample Point #3
	01	= Composite Sample #1 (4 grab samples composited over a 12 hour period)

Test Number Definitions

440	Initial Test Water Analysis (No UV/Oxidation treatment)
450	Bag Filter Test (1 μm bag filter, 5 μm cartridge filter, UV/Oxidation). No alum/polymer addition.
460	Sand Filter Test (sand filter, 5 μm cartridge filter, UV/Oxidation) No alum/polymer addition.
470	Design Test. System operated as designed. (Alum/polymer addition, clarification (CDF Cell #3), sand filter, 5 μm cartridge filter, UV/Oxidation).
510	Performance Test – Test Water Volume
560	Performance Test – Existing WTP operated as designed.
561	Performance Test – Existing WTP operated as designed.
562	Performance Test – Existing WTP operated as designed.
563	Performance Test – Existing WTP operated as designed.

Sample Point Locations

03	WTP Influent
06	Flocculation Tank Effluent
07	Settling Basin (CDF Cell #3) Effluent
10A	Bag Filter Effluent
10	Sand Filter Effluent
11	Cartridge Filter Effluent/UV Oxidation Influent
12A	UV/Oxidation after lamp #4 (9 lamps total)
12B	UV/Oxidation after lamp #7
12C	UV/Oxidation after lamp #9
12	UV/Oxidation effluent

TABLE D-1
Summary of Analytical Data for 400 Series WTP Testing
New Bedford Harbor Superfund Site OU#1

SAMPLE DATE	FWENC I.D. Discharge Limit	PCBs (1242) 0.065 ppb	TSS ppm	Total Metals (ppb) CADMIUM 9.3 ppb	CHROMIUM 50 ppb	COPPER 5.6 ppb	IRON NA	LEAD 8.5 ppb	Dissolved Metals (ppb) CADMIUM NA	CHROMIUM NA	COPPER NA	LEAD NA
4/5/99	WTP-440-03-01	29	7	0.7J	ND	20J	NA	9.9J	2.2J	ND	10J	20J
4/5/99	WTP-440-11-01	22	5	ND	ND	10J	400	6.9J	1.3J	ND	10J	6.3J
4/12/99	WTP-450-10A-01	5.5	12	ND	ND	7.4	NA	9.7	ND	ND	9.2	6.6
4/12/99	WTP-450-11-01	5.59	14	ND	ND	8.8	NA	14.6	ND	ND	11.6	11.2
4/12/99	WTP-450-12-01	0.21	ND	ND	ND	19	NA	20.4	ND	ND	13.5	6.8
4/12/99	WTP-450-12A-01	ND	NA	NA	NA	NA	NA	NA	NA	NA	NA	NA
4/12/99	WTP-450-12B-01	ND	NA	NA	NA	NA	NA	NA	NA	NA	NA	NA
4/13/99	WTP-450-10-02	5.88	19	ND	ND	9.5	NA	11	ND	ND	10.6	11.4
4/13/99	WTP-450-11-02	5.62	17	ND	ND	10.5	NA	11.9	ND	ND	11.3	9.7
4/13/99	WTP-450-12-02	0.24	12	ND	ND	12.2	NA	12	ND	ND	11.3	9.7
4/13/99	WTP-450-12A-02	ND	NA	NA	NA	NA	NA	NA	NA	NA	NA	NA
4/13/99	WTP-450-12B-02	ND	NA	NA	NA	NA	NA	NA	NA	NA	NA	NA
4/13/99	WTP-460-10-01	16.7	15	ND	ND	13.4	NA	7.8	ND	ND	11.5	ND
4/13/99	WTP-460-10-04	ND	ND	ND	ND	ND	NA	6.3	ND	ND	ND	7.3
4/13/99	WTP-460-11-01	22.5	17	ND	ND	13	NA	7	ND	ND	15.6	6.4
4/13/99	WTP-460-12-01	0.52	12	ND	21	16.3	NA	9.3	ND	ND	13.8	ND
4/13/99	WTP-460-12A-01	ND	NA	NA	NA	NA	NA	NA	NA	NA	NA	NA
4/13/99	WTP-460-12B-01	ND	NA	NA	NA	NA	NA	NA	NA	NA	NA	NA
4/14/99	WTP-460-10-02	12.4	18	ND	ND	16.1	NA	7.4	ND	ND	14.7	5.7
4/14/99	WTP-460-10-03	13.9	18	ND	ND	17.9	NA	8.9	ND	ND	17.8	ND
4/14/99	WTP-460-11-02	7.72	15	ND	ND	13.8	NA	7.7	ND	ND	11.2	11.2
4/14/99	WTP-460-12-02	0.28	9	ND	ND	18.9	NA	8.8	ND	ND	29	9.5
4/14/99	WTP-460-12-03	0.51	13	ND	ND	17	NA	10.3	ND	ND	22.2	8.9
4/14/99	WTP-460-12A-02	ND	NA	NA	NA	NA	NA	NA	NA	NA	NA	NA
4/14/99	WTP-460-12B-02	ND	NA	NA	NA	NA	NA	NA	NA	NA	NA	NA
4/14/99	WTP-470-06-01	4.24	13	ND	ND	13.8	NA	5.6	ND	ND	9.6	ND

TABLE D-2
Summary of Analytical Data for 500 Series WTP Testing
New Bedford Harbor Superfund Site OU#1

SAMPLE DATE	FWENC I.D.	PCBs (1242)	TSS	Total Metals (ppb)					Dissolved Metals (ppb)				
				CADMIUM	CHROMIUM	COPPER	IRON	LEAD	CADMIUM	CHROMIUM	COPPER	IRON	LEAD
	Discharge Limit	0.065 ppb	ppm	9.3 ppb	50 ppb	5.6 ppb	NA	8.5 ppb	NA	NA	NA	NA	NA
4/16/99	WTP-510-06-12	0.97	NA	NA	NA	NA	NA	NA	NA	NA	NA	NA	NA
4/16/99	WTP-510-06-12A	10.9	NA	NA	NA	NA	NA	NA	NA	NA	NA	NA	NA
4/16/99	WTP-510-06-12B	42.4	NA	NA	NA	NA	NA	NA	NA	NA	NA	NA	NA
4/16/99	WTP-510-06-12C	0.76	NA	NA	NA	NA	NA	NA	NA	NA	NA	NA	NA
4/16/99	WTP-510-11-18	NA	10	NA	NA	NA	NA	NA	ND	ND	9	10	11
4/16/99	WTP-510-6-11	45.6	NA	NA	NA	NA	NA	NA	NA	NA	NA	NA	NA
4/16/99	WTP-510-6-12	0.97	NA	NA	NA	NA	NA	NA	NA	NA	NA	NA	NA
4/16/99	WTP-510-6-12A	10.9	NA	NA	NA	NA	NA	NA	NA	NA	NA	NA	NA
4/16/99	WTP-510-6-12B	4.24	NA	NA	NA	NA	NA	NA	NA	NA	NA	NA	NA
4/16/99	WTP-510-6-12C	0.76	NA	NA	NA	NA	NA	NA	NA	NA	NA	NA	NA
4/20/99	WTP-510-03-98	NA	200	NA	NA	NA	NA	NA	NA	NA	NA	NA	NA
4/20/99	WTP-510-03-99	117	25	NA	NA	NA	NA	NA	NA	NA	NA	NA	NA
5/7/99	WTP-510-11-01	0.84	NA	NA	NA	NA	NA	NA	NA	NA	NA	NA	NA
5/7/99	WTP-510-12-01	0.5	NA	NA	NA	NA	NA	NA	NA	NA	NA	NA	NA
5/7/99	WTP-510-12B-01	ND	NA	NA	NA	NA	NA	NA	NA	NA	NA	NA	NA
5/13/99	WTP-510-03-01	9460	2120	31	630	1500	NA	951	ND	ND	21	NA	7.1
5/13/99	WTP-510-11-01	325	51	ND	20	55	1500	29	ND	ND	14	200	7.6
5/24/99	WTP-560-24-11	10.9	NA	NA	NA	NA	NA	NA	NA	NA	NA	NA	NA
5/24/99	WTP-560-24-12	0.32	NA	NA	NA	NA	NA	NA	NA	NA	NA	NA	NA
5/24/99	WTP-560-24-12A	ND	NA	NA	NA	NA	NA	NA	NA	NA	NA	NA	NA
5/24/99	WTP-560-24-12B	1.41	NA	NA	NA	NA	NA	NA	NA	NA	NA	NA	NA
5/24/99	WTP-560-24-12C	0.31	NA	NA	NA	NA	NA	NA	NA	NA	NA	NA	NA
5/25/99	WTP-510-06-11	45.6	NA	NA	NA	NA	NA	NA	NA	NA	NA	NA	NA
5/25/99	WTP-561-03-01	125	NA	NA	NA	NA	NA	NA	NA	NA	NA	NA	NA
5/25/99	WTP-561-06-01	109	NA	NA	NA	NA	NA	NA	NA	NA	NA	NA	NA
5/25/99	WTP-562-03-01	193	NA	NA	NA	NA	NA	NA	NA	NA	NA	NA	NA
5/25/99	WTP-562-06-01	649	NA	NA	NA	NA	NA	NA	NA	NA	NA	NA	NA

TABLE D-2
Summary of Analytical Data for 500 Series WTP Testing
New Bedford Harbor Superfund Site OU#1

SAMPLE DATE	FWENC I.D.	PCBs (1242)	TSS	Total Metals (ppb)					Dissolved Metals (ppb)				
	Discharge Limit	0.065 ppb	ppm	CADMIUM 9.3 ppb	CHROMIUM 50 ppb	COPPER 5.6 ppb	IRON NA	LEAD 8.5 ppb	CADMIUM NA	CHROMIUM NA	COPPER NA	IRON NA	LEAD NA
5/26/99	WTP-563-03-01	1940	1740	60	970	2530	NA	1400	ND	ND	13	NA	ND
5/26/99	WTP-563-06-01	2150	1370	20	380	1000	NA	600	ND	ND	6	NA	ND
5/26/99	WTP-563-07-01	216	15	ND	ND	12	NA	6	ND	ND	ND	NA	ND
5/26/99	WTP-563-10-01	78.7	12	ND	ND	13	NA	ND	ND	ND	12	NA	ND
5/26/99	WTP-563-11-01	41	8	ND	ND	9	NA	9	ND	ND	6	NA	ND
5/26/99	WTP-563-12-01	0.67	8	ND	ND	15	NA	ND	ND	ND	6	NA	ND
5/26/99	WTP-563-12A-01	1.62	NA	NA	NA	NA	NA	NA	NA	NA	NA	NA	NA
5/26/99	WTP-563-12B-01	1.93	NA	NA	NA	NA	NA	NA	NA	NA	NA	NA	NA
5/26/99	WTP-563-12C-01	0.99	NA	NA	NA	NA	NA	NA	NA	NA	NA	NA	NA

Table D-3
Summary of Analytical Data for UV/Oxidation Testing
New Bedford Harbor Superfund Site OU#1

SAMPLE DATE	FWENC I.D.	TOC	pH	Salinity	Alkalinity	Bromide	COD	Chloride	Nitrate	Total Iron
4/5/99	WTP-440-03-01	NA	8.02	2.4	NA	NA	NA	NA	NA	NA
4/5/99	WTP-440-11-01	13.9	7.97	NA	128	3.1	62	1143	0.02	NA
4/14/99	WTP-510-11-18	14.9	NA	NA	109	2.6	68	1350	0.02	NA
5/13/99	WTP-510-03-01	NA	7.65	2.5	NA	NA	NA	NA	NA	NA
5/13/99	WTP-510-11-01	12.8	NA	NA	119	3.6	ND	1360	0.02	NA

Appendix D

Design Calculations

List of Design Calculations
New Bedford Harbor Water Treatment Plant
New Bedford Harbor Superfund Site – OU #1

C-01 WTP Foundation Recommendations and Design Parameters

M-01 Fuel Cost Analysis

P-01 WTP Flow Rate
P-02 WTP Mass Balance
P-03 Filtration Equalization Basin (CDF Cell #3) Residence Time
P-04 Clarifier Feed Pump (P-101A/B/C) Sizing
P-05 Filtration Feed Pump (P-301A/B/C) Sizing
P-06 Clarifier Slurry Transfer and Recycle Pumps (DP-101/102)
P-07 Slurry Transfer Pump (DP-103)
P-08 Inclined Plate Clarifier System (CL-101) Sizing
P-09 Clarifier Discharge Line Sizing
P-10 Chemical Feed Pump (MP-201/202/203) Sizing
P-11 Sand Filtration System (SF-301/302) Sizing
P-12 Polishing Filtration System (PF-401/402) Sizing
P-13 Liquid Phase Granular Activated Carbon System (LC-501/502/503) Sizing
P-14 Sump Pump (P-601) Sizing
P-15 Air Compressor (AC-701) Sizing
P-16 Suction Line Submergence Depth
P-17 Alum Transfer and Recirculation Pumps (DP-201/202)

CALCULATION COVER SHEET

PROJECT New Bedford Harbor Superfund Site OU#1

SUBJECT WTP Foundation Recommendation and Design Parameters

CLIENT U.S. Army Corps of Engineers – New England District (USACE – NED)

CALCULATION NO. C-01 PROJECT NO. 5197.1720.3392

NO OF SHEETS 48 DESIGN LEVEL 2

CALCULATION BY OTHERS ____ YES X NO

PREPARER A. Tognon

REVIEWED BY MA Z Ott DATE 10/2/01

ASSUMPTIONS THAT REQUIRE CONFIRMATION ____ YES X NO

ASSUMPTIONS CONFIRMED BY NA DATE NA

PRINT NAME, DATE AND INITIAL

Rev No	Affected Sheets	Prepared by Date	Checked by Date	Verified by Date
1	2-6	AT 4/22/02	MO 4/23/02	

2/48
GJ 04/22/02

1.0 INTRODUCTION

This design calculation to the Water Treatment Plant Basis of Design/Design Analysis (BD/DA) Report presents design recommendations for foundation design. Recommendations are provided for building foundations and equipment foundations. The design recommendations are based on Foster Wheeler's interpretation of subsurface conditions from previous soil borings and the proposed design of the new water treatment facility.

The content of this foundation design calculation consists of the following information:

1. Review of boring information for the foundation location.
2. Soil descriptions and properties.
3. Recommended foundation types and design parameters based upon the foundation type.

Our recommendations for foundations are made in accordance with the national and state building codes and standards.

2.0 GEOLOGY

The project site is situated west of the existing water treatment plant (WTP) constructed as part of the pilot dredging program. Prior to the start of site development in support of pilot dredging, the geology at the site consisted of a partially submerged large flat seaboard lowland. Subsurface strata reported at that time consisted of the following units (listed from lower to higher):

- Bedrock, granitic gneiss, typically located 35 ft below the ground surface.
- Bedrock is generally overlain by alluvial sand. Sands were reported to consist of fine to medium sand with up to 50% silt content and up to 30% gravel content.
- In onshore areas, there is fill over alluvial sand. The fill consists of granular materials mixed with debris.
- In offshore areas, there is organic clay. The offshore organic clay lies above the sand and contains up to 50% silt content and up to 30% gravel content.

3.0 PREVIOUS FIELD INVESTIGATIONS

The field investigations and corresponding data used in this design were performed for previous designs in the vicinity of the proposed WTP foundation. The field investigations were conducted during several phases from July 1985 to November 1988. A detailed description of site investigations is reported in Appendix 6 of the New Bedford Harbor Superfund Pilot Study Report, dated May 1990.

The existing borings are located approximately east of the proposed location of the water treatment building (see attached Figures 6-3 and 6-4). Although the existing soil borings provide a cross section of the soil, the conditions may vary beneath the foundation area for the proposed WTP. Existing building foundations located between the borings and the proposed location of the WTP were designed using the existing borings and extrapolating the soil conditions for the foundation design. The existing building has performed well over the last 10 years.

4.0 SUBSURFACE CONDITIONS

Subsurface conditions are taken directly from the Pilot Study Report. Soil stratum descriptions are based upon four soil borings (PD-20, PD-21A, PD-22, and BL-5) and one probe test (PL-1), located in proximity to the proposed location of the WTP foundation. Field logs and typical profiles taken from the NBH Pilot Study Report are included in the foundation design calculations. Attached Figure 2 shows the typical soil profile. Attached are exploration logs for PL-1, BL-5, PD-20, PD-21, PD-21A, and PD-22.

4.1 Soil Stratum Descriptions

Fill: A surficial granular fill was observed in all the land borings and test pits. The fill typically consisted of a silty, gravelly sand matrix mixed with bricks, ashes, cinders, concrete, wood, and metal. The fill thickness varied from 5 to 8 ft. Typically the sand content varied from 50 to 75 percent, the gravel content from 10 to 40 percent, and the fines content from 10 to 15 percent in the fill matrix. It appeared that the substructure of mill buildings which once existed at the site were demolished and then mixed with the matrix. The mixture was dumped into the foundations of the mill buildings which were left in place. Although largely influenced by the gravel and debris, the standard penetration tests executed in the fill strata varied from 10 to 40 blows per foot, which indicates that the fill strata deposit has a medium dense consistency. The average SPT value in the fill strata from the four soil borings was 23 blows per foot.

Sand: Natural sands were encountered below the surficial fill. The sands varied from well graded silty sands to clean narrowly graded sands. The sand layer was only fully penetrated in one boring (PD-23) and was 29 ft thick. Standard penetration tests executed in the sand varied from 10 to 60 blows per foot. They indicate that the sand is medium dense in the top twenty feet of the strata increasing to dense near the bottom. The average SPT value in the sand layer from the four soil borings was 23 blows per foot.

Organic Clay: Approximately 16 ft of organic clay was observed in one boring, PD-20. Standard penetration values recorded in the boring logs ranged from 3 to 7, which correlates to soft to medium consistency (note: sensitively of the clay may considerably affect the N values recorded). Organic clay was not reported in logs for borings PD-21A, PD-22, and PD-23. These borings did show similar geologic strata and correspondingly similar standard penetration values.

4.2 Groundwater

Groundwater in the vicinity of the WTP foundation varied from 1.4 to 2.0 ft (NGVD) or 2.72 to 3.32 ft (MLW). The groundwater observations are reported Foster Wheeler Environmental Corporation (2000) and Haley and Aldrich, Inc. (1991). It should be noted that fluctuations in the groundwater levels may occur due to variations in tide, rainfall, snow, temperature, ice, wind, or other factors which differ from the conditions at the time that the observations were made.

5.0 FOUNDATION RECOMMENDATIONS AND DESIGN PARAMETERS

5.1 Design Approach

In order to make foundation design recommendations, it is necessary to know the subsurface conditions and the facility design and operation performance criteria. As described in this BD/DA Report, the water treatment system consists of individual treatment units enclosed within a steel-frame building with a relatively small control room. The proposed building and equipment will be similar in size and weight to

the existing WTP, which is built on shallow footings. In these types of facilities, slab elevations are not critical and the building and piping can tolerate one to two inches of differential settlement.

Given the type of facility, the satisfactory performance of the existing facility and the number of borings near the proposed facility, Foster Wheeler recommended that the foundation design be done utilizing the information available. The USACE concurred with this recommendation during on-board design review meetings.

Foundation design parameters may be determined by empirical methods or by deterministic methods calculating bearing capacity, settlement, and soil modulus of subgrade reaction. In the following sections, both methods are used. The empirical values are based on Massachusetts State Building Code allowable levels and the experience of the existing water treatment plant. The deterministic values are based on values calculated from the results of the previous soil borings.

In foundation design, it is standard practice to calculate bearing capacity and settlement separately. The allowable bearing capacity of foundations is the maximum stress that may be imposed on the ground with low risk of structure collapse. In some cases, applied stresses well below the bearing capacity may result in settlement that is not acceptable. The allowable settlement depends on the type of structure and the types of equipment in the facility. For example, masonry structures and precision manufacturing equipment require foundations with little settlement. On the other hand, steel and timber structures and mechanical systems using pressure piping can tolerate significantly more settlement.

5.2 Bearing Capacity and Subgrade Modulus for Building and Equipment Foundations

Based upon the use of a single-story steel structure and relatively flexible piping systems between water treatment equipment, spread footing foundations are recommended to support buildings and treatment equipment. Calculations of bearing capacity and modulus of subgrade reaction are attached.

Massachusetts State Building Code: Allowable foundation design parameters may be determined by empirical methods following criteria in the Massachusetts State Building Code. The building code recommends an allowable bearing pressure of 2 to 4 ton/ft^3 (4,000 to 8,000 psf) for the foundation materials located at the site (CMR Table 1804.3). Sections 1801 to 1825 of the code are attached. Based upon the bearing capacity recommendations by the local building code and limiting settlement to less than 1 inch, the corresponding modulus of subgrade reaction would range from 48 to 96 ton/ft^3, or a median value of 72 ton/ft^3.

Pilot Study Facility: Based on information from design drawings, the existing facility used an allowable bearing capacity of 2,000 psf. It is our understanding that the existing facilities have performed well and that there are no known problems with the existing foundations.

Standard Penetration Values: The site data can be combined with published correlations to determine foundation design parameters. Based upon a medium dense sand foundation material, the corresponding relative density would range from 35 to 65% (Terzaghi & Peck). Medium dense sand typically has a subgrade modulus of 70 to 185 ton/ft^3, or a median value of 125 ton/ft^3. Using SPT values, the allowable soil bearing pressure would be approximately 5 ton/ft^3 (10,000 psf), depending on the footing size. Based upon the allowable bearing capacity generated from SPT values and limiting settlement to less than 1 inch, the corresponding subgrade modulus is approximately 120 ton/ft^3.

For footing design, it is recommended to use an allowable bearing capacity of 2,000 pounds per square foot and a subgrade modulus of 72 ton/ft^3. This is consistent with the existing treatment plant and less than would be allowable under the Massachusetts State Building Code.

For slab on grade design, the subgrade modulus should be reduced to 20 ton/ft^3.

Frost Protection: As per the Massachusetts State Building Code CMR 1806, exterior footings or footings in unheated areas for the WTP shall extend a minimum of four feet (1.2 meters) below finished grade, except when erected on sound bedrock, or when protected from frost. Interior footings should have a minimum embedment of 2.0 feet below finished grade to develop the bearing value of the soils.

Building column footings must have a width of at least 24 inches and the bottom of the footing must be at least 48 inches deeper than the surrounding finish. Perimeter wall footings must have a width of at least 12 inches and a depth of at least 24 inches below finish grade. Footings placed higher than the frost depth would be subject to heaving and settling during soil freezing and thawing.

The interior ground floor of heated buildings could be a slab on grade supported by structural fill. A slab on grade supported by loose or un-compacted fill is not recommended. If loose fill is present, it should be removed to a depth of at least 12 inches below the bottom of the proposed slab. For slabs inside heated buildings, frost heave is not a concern.

Seismicity: Previously, in the Pilot Study Report, it was noted that the project site lies in seismic zone 2 according to the seismic zone map of the United States, and the foundation materials present at the site were not judged to be susceptible to liquefaction or excessive deformation in the event of a significant earthquake. In addition, Foster Wheeler re-evaluated the liquefaction potential of the saturated sand underlying all footings for the WTP per the Massachusetts State Building Code CMR 1805.3 Figure 1805.3. The results confirmed that the sand underlying the footings would not be susceptible to liquefaction.

Foundations for Vibrating Machinery: The recommended minimum weight of the foundation is 1.5 times the weight of vibrating machinery. Foundations for heavy machinery should be isolated from foundations and floors of buildings. The gap between machine foundation and other construction shall be at least one inch. This gap shall be maintained clear or filled with a soft caulking material. The bottom of the machine foundation shall not be above foundations of neighboring buildings.

6.0 EARTHWORK AND SITE WORK RECOMMENDATIONS

All vegetation, roots, and other organic material must be removed from all areas of buildings or pavement. Existing buildings must be removed and all floor slabs and footings must be removed to a depth of at least 3 feet below the bottom of the footings for the proposed facilities.

Fill must be placed in level layers on level ground surfaces, since fill placed on sloping ground is less stable. We recommend that where fill is placed on sloping ground, that horizontal benches be excavated into the soil to form level areas. The maximum vertical distance between benches should be less than five feet. The slope between successive benches could be as steep as the ground would allow. Filling should start at the bottom of sloping areas and work upward. Successive benches at higher elevations can be excavated when the fill has been placed to the elevation of the next bench.

Structural fill must be placed in layers with thickness' of less than 8 inches and compacted to an average density of 95 percent of the maximum density as determined by *ASTM D 1557 Test Method for Laboratory Compaction Characteristics of Soil Using Modified Effort* (ASTM, 2000).

Embankment fill must be placed in layers with thickness' of less than 8 inches and compacted to an average density of 90 percent of the maximum density as determined by *ASTM D 1557 Test Method for Laboratory Compaction Characteristics of Soil Using Modified Effort* (ASTM, 2000).

Drain gravel (under slabs and around foundation drains) must be carefully compacted with hand-held equipment.

Control of groundwater is important for both construction and long-term stability. During construction, it is important that groundwater be intercepted upslope of the construction area and diverted away from the foundation excavations.

Earthwork on sloping ground can lead to surface erosion. Surface water runoff from the streets or adjacent property should be prevented from flowing into the slope area. The Contractor should install temporary berms or other water diversion features to divert surface water runoff around the construction site. Rainfall or surface water that enters the construction site should be filtered by a silt fence or straw bales before being discharged from the site.

7.0 REFERENCES

ASTM (2000). *Annual Book of Standards, Volume 04.08, Soil and Rock(I), American Society of Testing Materials (ASTM),* West Conshohocken, PA, 2000 Edition.

Foster Wheeler Environmental Corporation (2000). *Geotechnical Data Report for Design of Confined Disposal Facility (CDF) C for Operable Unit #1 New Bedford Harbor Superfund Site,* New Bedford, Massachusetts, April 2000.

Haley and Aldrich, Inc. (1991). *Geotechnical Data Report, Wastewater System Improvements, Belleville Avenue Force Main Extension, New Bedford, Massachusetts,* prepared for Camp Dresser and McKee, Inc., June 1991.

U.S. Army Corps of Engineers – New England Division (1990). *New Bedford Harbor Superfund Pilot Study, Evaluation of Dredging and Dredge Material Disposal,* May 1990.

Woodward-Clyde Consultants (1987). *Field Investigation and Analytical Testing, New Bedford Superfund Site,* New Bedford, Massachusetts, January 6, 1987.

8.0 ATTACHMENTS

1. Figure 2 – Typical Soil Profile
2. SPT Values at CDF C
3. Figure 6-3 – Exploration Plan CDF Area
4. Figure 6-4 – Exploration Plan CAD Area
5. Exploration logs for PL-1, BL-5, PD-20, PD-21, PD-21A, and PD-22
6. 780 CMR 1801.0 to 1825.0 – Massachusetts State Building Code for Foundation and Retaining Walls
7. Bearing capacity calculations (3 sheets)

7/48

GT Oct 30/01

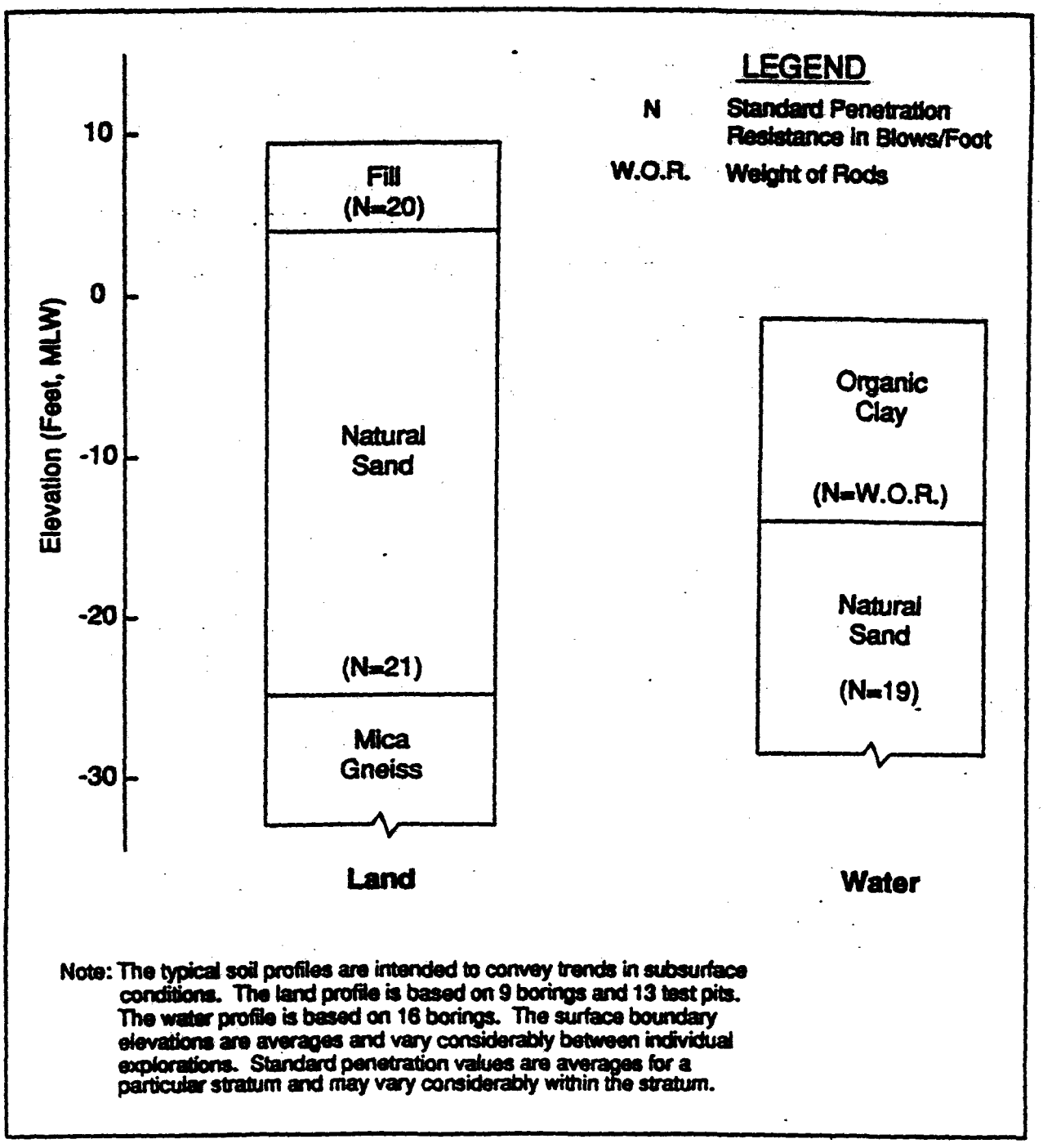

Note: The typical soil profiles are intended to convey trends in subsurface conditions. The land profile is based on 9 borings and 13 test pits. The water profile is based on 16 borings. The surface boundary elevations are averages and vary considerably between individual explorations. Standard penetration values are averages for a particular stratum and may vary considerably within the stratum.

FIGURE 2

SPT VALUES AT CDF C

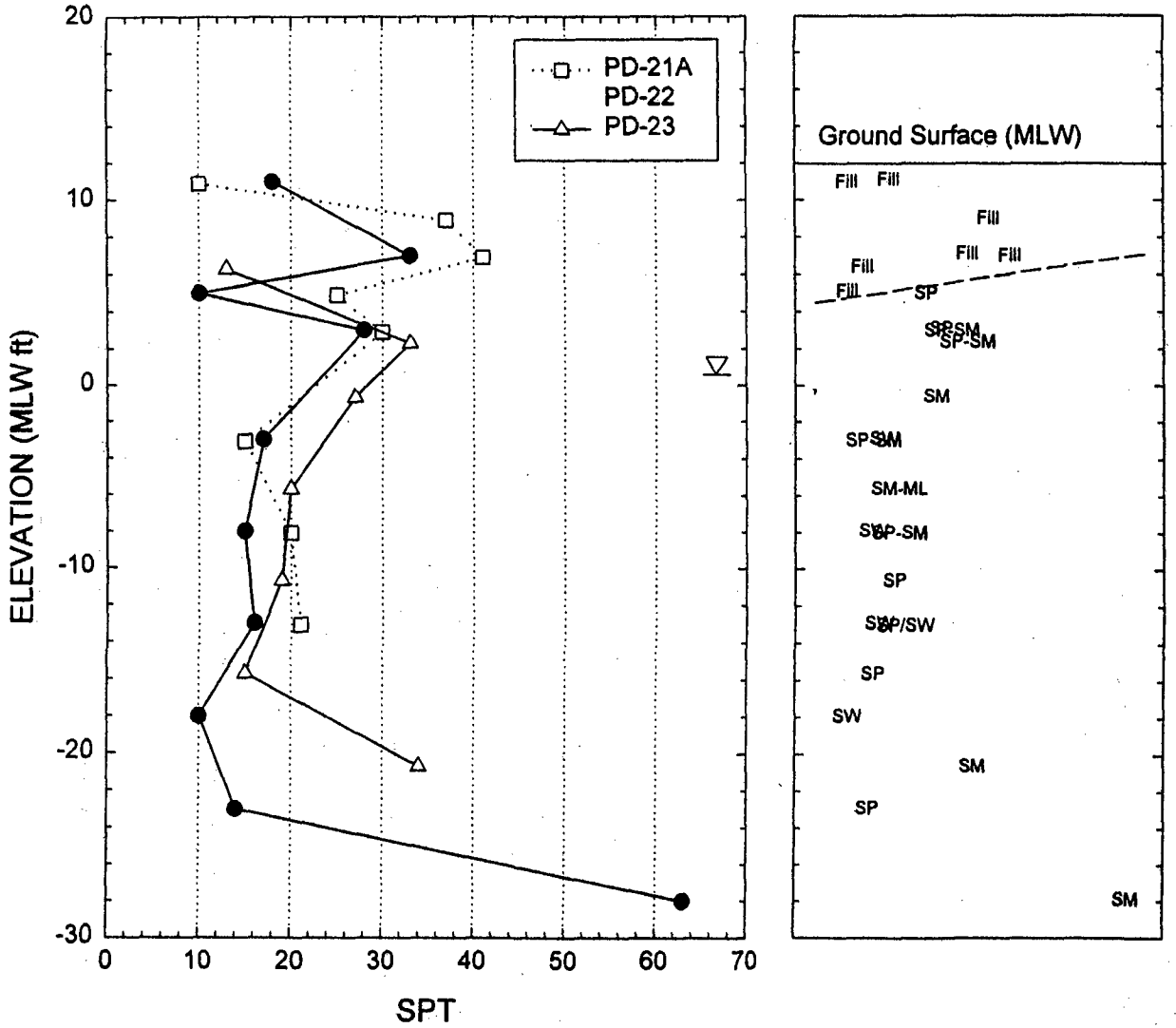

Figure 3

8/48

GT 0CT 30/01

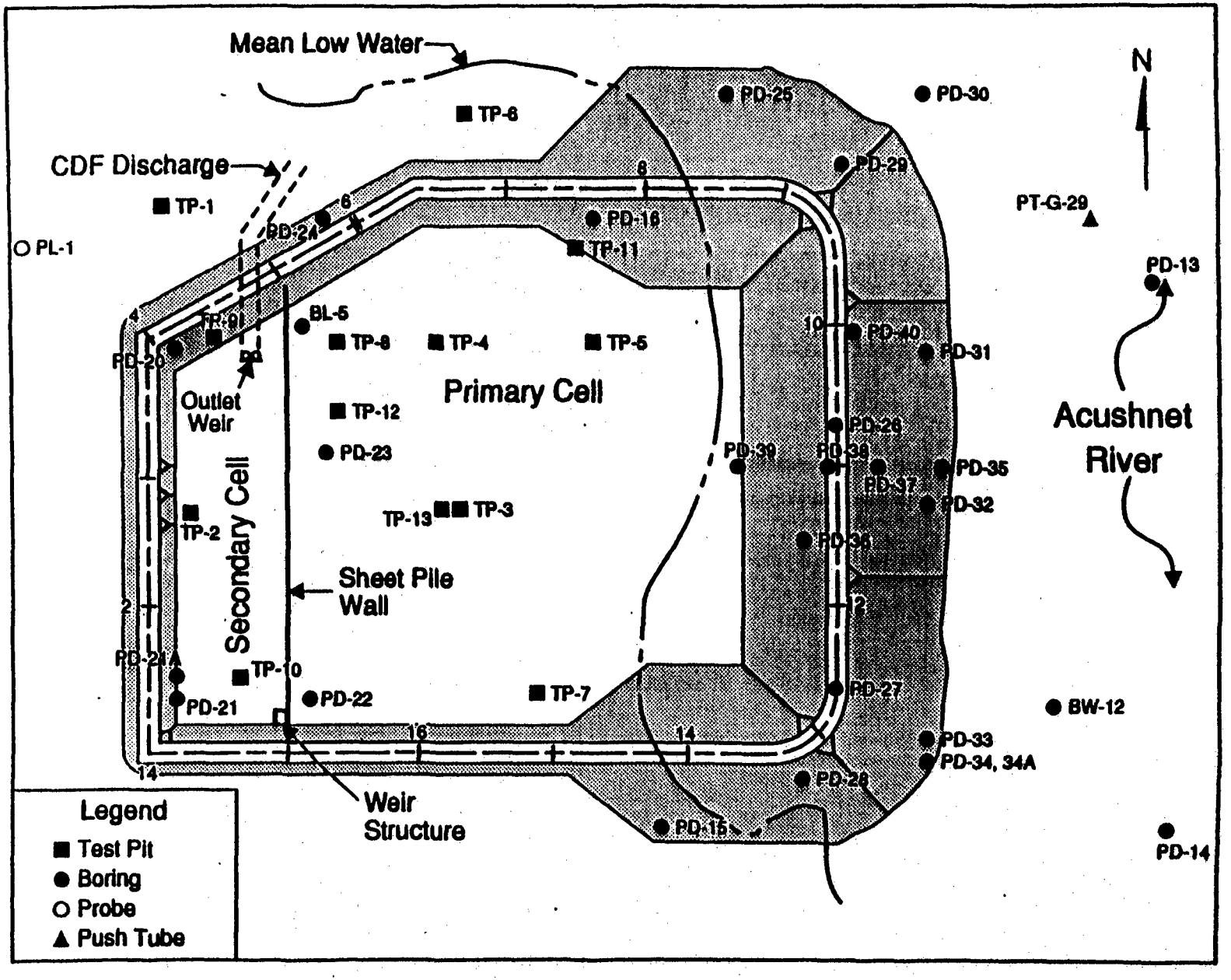

Figure 6-3 Exploration Plan - CDF Area

G) Oct 30/01

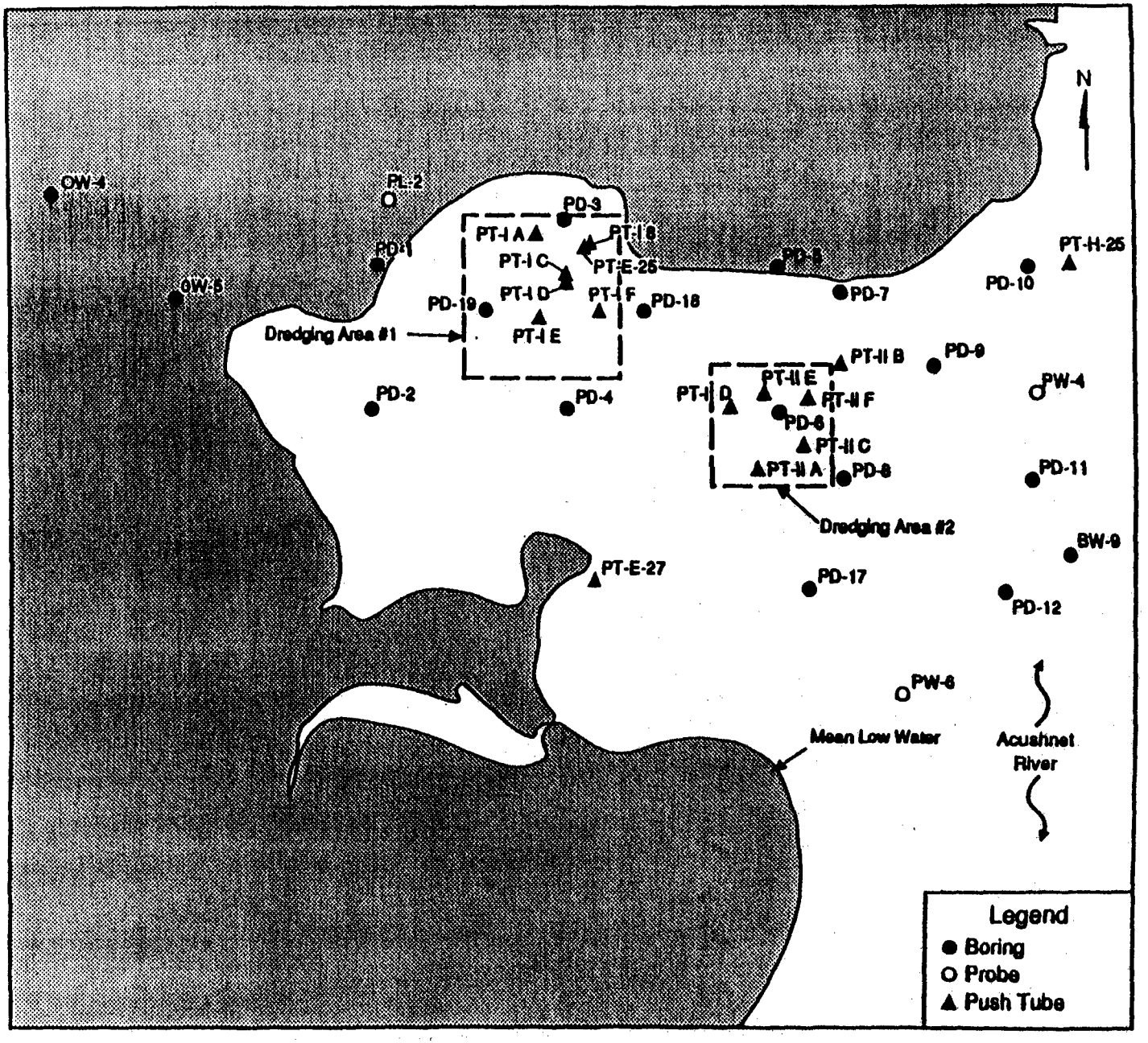

Figure 6-4 Exploration Plan - CAD Area

Oct 30/01

10/48

BORING LOCATION See Fig. 2 DATE START/FINISH 17 Sept 1987 / 18 Sept 1987

GROUND ELEVATION (MLW) 11.0 ft. DRILLED BY P. Didden, Guild Drilling

GROUNDWATER EL. Depth 3.0 ft. DATE 17 Sept87 LOGGED BY T. May, GEI TOTAL DEPTH (FT) 26.0

PD-20
92 0073/01

PG. 1 OF 1

EL. FT	DEPTH FT	SAMPLE TYPE & No.	BLOWS/ 6 IN.	PEN IN.	REC. IN.	REMARKS	SOIL AND ROCK DESCRIPTIONS
10		S1	1-3-7-15	24	18		S1: Silty Sand with gravel. Fine to Coarse sand fine to coarse gravel, nonplastic fines, cinders, dark brown to black, dry. (FILL).
		S2	18-16-18-26	24	24	HW Casing	S2: Silty Sand with gravel. Fine to coarse sand, fine to coarse gravel, silt, blue grey, dry, and brick fragments. (FILL).
	5	S3	27-15-8-11	24	18	HW Casing Wash Boring	S3: Silty Sand. Widely graded fine to coarse sand with about 30% fines; cinders, and coal, black, dry. (FILL).
5		S4	5-8-8-9	24	8		S4: Similar to S3 but with fine gravel and metal. (FILL).
	10	S5	1-1-2-1	24	12		S5: Organic Clay. Organic clay with fine sand, occ. coarse sand to fine gravel, saturated, organic odor, dark gray. (OH).
0							
	15	S6	1-2-2-3	24	24		S6: Organic Clay. Organic clay with trace of sand, organic odor, dark gray. (OH).
-5							
	20	S7	5-4-3-8	24	8		S7: Organic clay. Organic clay with shells, organic odor, dark grey. (OH).
-10						Change in wash returns. Bottom of Casing	
	25	S8	50/4"-4"/2"-7"-6"-5"	24	20	*300# hammer	S8: Silty Sand. Fine to medium sand with 20% fines, golden orange brown. (SM).
							BOTTOM OF BORING 26.0 FEET.

BLOWS PER 6"-140LB. HAMMER FALLING 30" TO DRIVE A 2.0 IN. OD SPLIT SPOON SAMPLER
PEN-PENETRATION LENGTH OF SAMPLER OR CORE BARREL
REC-RECOVERY LENGTH OF SAMPLE
RQD-LENGTH OF SOUND CORES>4 IN./LENGTH CORED, %
S-SPLIT SPOON SAMPLE
U-UNDISTURBED SAMPLE UF-FIXED PISTON
UO-OSTERBERG
▼ GROUNDWATER

NOTES:

NEW BEDFORD SUPERFUND SITE
NEW BEDFORD, MA
DATE 13 Nov87 PROJECT 87311

G E I

12/48
a7 OCT 30/61

BORING LOCATION See Fig. 2	DATE START/FINISH 15 Sept 1987/ 15 Sept 1987	PD-21
GROUND ELEVATION (MLW) 11.9 ft.	DRILLED BY P. Dicken, Guild Drilling	
GROUNDWATER EL. Not Observed DATE 15 Sept87	LOGGED BY T. Nay, GEI TOTAL DEPTH (FT) 4.0	PG. 1 OF 1

EL. FT	DEPTH FT	SAMPLE TYPE & No.	BLOWS/ 6 IN.	PEN IN.	REC. IN.	REMARKS	SOIL AND ROCK DESCRIPTIONS
		S1	3-8-7-9	24	10	10 ppm VOC in borehole(1)	S1: Silty Sand. Fine to medium sand with fine gravel, organic silt, glass, dark brown, dry. (FILL).
10		S2	3-5-7-11	24	8	15 ppm VOC in borehole(1)	S2: Silty Sand. Widely graded fine to coarse sand with gravel and silt, chips of coal, oily odor. (FILL).
							BOTTOM OF BORING 4.0 FEET.

5, 10, 15, 20, 25

5, 0, -5, -10, -15

BLOWS PER 6"-140LB. HAMMER FALLING 30" TO DRIVE A 2.0 IN. OD SPLIT SPOON SAMPLER
PEN-PENETRATION LENGTH OF SAMPLER OR CORE BARREL
REC-RECOVERY LENGTH OF SAMPLE
RQD-LENGTH OF SOUND CORES>4 IN./LENGTH CORED, %
S-SPLIT SPOON SAMPLE
U-UNDISTURBED SAMPLE UF-FIXED PISTON
UO-OSTERBERG

NOTES:
1)Volatile organic compounds meas. using HNU photoionization detector.
2) Boring terminated due to elevated VOC in borehole.

NEW BEDFORD SUPERFUND SITE
NEW BEDFORD, MA
DATE 13 Nov87 PROJECT 87311

G E I

13/48

BORING LOCATION See Fig. 2	DATE START/FINISH 18 Sept 1987 / 18 Sept 1987	PD-21A
GROUND ELEVATION (MLW) 11.9 ft.	DRILLED BY P. Diddan, Guild Drilling	
GROUNDWATER EL. Depth 7 ft DATE 20 min(1)	LOGGED BY T. May, GEI TOTAL DEPTH (FT) 26.0	PG. 1 OF 1

GJ OCT 30/61

EL. FT	DEPTH FT	SAMPLE TYPE & No.	BLOWS/ 6 IN.	PEN IN.	REC. IN.	REMARKS		SOIL AND ROCK DESCRIPTIONS
		S1	3-6-4-2	24	12	Ambient HNU readings	FILL	S1: Silty Sand. Widely graded fine to coarse sand and gravel with silt, glass, slag, cinders, and coal. (FILL).
10		S2	5-16-11-10	24	2	Wash Boring Using NW Casing		S2: Silty Sand. Widely graded sand with nonplastic fines, slag, cinders, and glass. (FILL).
	5	S3	26-24-17-17	24	6			S3: Sand. Fine sand with brick fragments, light brown (FILL).
5		S4	13-11-14-16	24	24			S4: Narrowly Graded Sand. Fine sand with <5% fines, light brown, dry. (SP).
		S5	10-13-17-16	24	20			S5: Narrowly Graded Sand with silt. Fine sand with about 10% fines, light brown. (SP-SM).
	10							
0								
		S6	4-6-9-7	24	12		SAND	S6: Similar to S5.
	15							
-5								
		S7	7-7-13-14	24	18			S7: Silty Sand. Narrowly graded fine sand with 10-20% nonplastic fines, stratified, light brown. (SP-SM).
	20							
-10						Bottom of Casing		
		S8	10-12-9-12	24	12		SW	S8: Sand. 0-6" Narrowly graded fine sand. (SP). 6-12" Widely graded fine to coarse sand with gravel. (SW).
	25							
-15								BOTTOM OF BORING 26.0 FEET.

BLOWS PER 6"-140LB. HAMMER FALLING 30" TO DRIVE A 2.0 IN. OD SPLIT SPOON SAMPLER
PEN-PENETRATION LENGTH OF SAMPLER OR CORE BARREL
REC-RECOVERY LENGTH OF SAMPLE
RQD-LENGTH OF SOUND CORES>4 IN./LENGTH CORED, %
S-SPLIT SPOON SAMPLE
U-UNDISTURBED SAMPLE UF-FIXED PISTON UO-OSTERBERG
▼ GROUNDWATER

NOTES:
1) Measured about 20 min. after completion of boring.

NEW BEDFORD SUPERFUND SITE
NEW BEDFORD, MA
DATE 13 Nov 87 PROJECT 87311

G E I

3

BORING LOCATION See Fig. 2 DATE START/FINISH 14 Sept 1987 / 15 Sept 1987

GROUND ELEVATION (MLW) 12.0 ft. DRILLED BY P. Didden, Guild Drilling

GROUNDWATER EL. Depth 6 ft. DATE 15 Sept87 LOGGED BY M.Mahoney/T.MayGEI TOTAL DEPTH (FT) 41.0

PD-22-
G7 06734/01

EL. FT	DEPTH FT	SAMPLE TYPE & No.	BLOWS/ 6 IN.	PEN IN.	REC. IN.	REMARKS		SOIL AND ROCK DESCRIPTIONS
		S1	2-8-10-12	26	12	Hollow Stem Augers	FILL	S1: Silty Sand. Widely graded sand, low plasticity fines, leather scraps, <5% gravel, brown. (FILL).
10		S2	30-100/5"	10	8	Augers bounced while advancing 2.8'-4.0'. Auger cuttings include leather scraps.		S2: Leather scraps, ashes, glass, debris, etc., <5% soil. (FILL)
	5	S3	14-9-24-16	26	20			S3: Narrowly Graded Sand, fine sand, 30-40% brick fragments, gold-brown. (FILL).
5		S4	3-4-6-6	26	16	Approximate Stratum change		S4: Narrowly Graded Sand, fine sand, 5% ash, gold-brown. (FILL).
		S5	4-10-18-26	26	12		SANDS	S5: Narrowly Graded Sand. Stratified by color into <1 inch layers, gold-brown. (SP).
	10					Auger cuttings 10-15' narrowly graded sand, saturated.		
0								
	15	S6	4-10-7-10	26	13			S6: Widely Graded Sand. Fine to medium sand, stratified by color and particle size into <1 inch layers, <5% fines, occasional fine gravel, light brown to gray. (SW).
-5						Auger cuttings 17'-20' Widely graded sand, saturated.		
	20	S7	3-6-9-10	26	20			S7: Similar to S6.
-10						Advanced augers to 24' NW casing from 24'-39'.		
	25	S8	13-8-8-10	26	13	Wash Boring Using NW Casing		S8: Widely Graded Sand. Fine to coarse sand, <5% fines, light brown. (SW).
-15						Wash returns fine to medium sand.		
		S9	4-5-5-9	26	10			S9: Similar to S8.

BLOWS PER 6"-140LB. HAMMER FALLING 30" TO DRIVE A 2.0 IN. OD SPLIT SPOON SAMPLER
PEN-PENETRATION LENGTH OF SAMPLER OR CORE BARREL
REC-RECOVERY LENGTH OF SAMPLE
RQD-LENGTH OF SOUND CORES>4 IN./LENGTH CORED, %
S-SPLIT SPOON SAMPLE
U-UNDISTURBED SAMPLE UF-FIXED PISTON
UO-OSTERBERG
▼ GROUNDWATE

NOTES:

NEW BEDFORD SUPERFUND SITE
NEW BEDFORD, MA
DATE 13 Nov87 PROJECT 87311

G E I

BORING LOCATION See Fig. 2 DATE START/FINISH 14 Sept 1987 / 15 Sept 1987

GROUND ELEVATION (MLW) 12.0 ft DRILLED BY P. Didden, Guild Drilling

GROUNDWATER EL. Depth 6.0 ft. DATE 15 Sept87 LOGGED BY M.Mahoney/T.MayGEI TOTAL DEPTH (FT) 41.0

PD-22

00734/61

EL. FT	DEPTH FT	SAMPLE TYPE & No.	BLOWS/ 6 IN.	PEN IN.	REC. IN.	REMARKS		SOIL AND ROCK DESCRIPTIONS
		S9	4-5-5-9	24	0	Sand running into casing sample taken for soil classification.		
-20						Wash returns Med. to coarse sand, gravel in casing.		
	35	S10	10-10-4-12	24	22		S R N D S	S10A: 0-12" Sand. Predominantly fine to medium sand, <5% fines, light brown. (SP). S10: 12-22" Sand. Medium to coarse sand, <5% fines, <5% fine gravel, light brown. (SP).
-25						Wash Boring Using NW Casing Bottom of casing		
	40	S11	21-16-47-33	24	14			S11: Silty Sand. Fine sand with fine to medium gravel 20-30% fines, light brown. (SM).
	45							BOTTOM OF BORING 41.0 FEET.

BLOWS PER 6"-140LB. HAMMER FALLING 30" TO DRIVE A 2.0 IN. OD SPLIT SPOON SAMPLER
PEN-PENETRATION LENGTH OF SAMPLER OR CORE BARREL
REC-RECOVERY LENGTH OF SAMPLE
RQD-LENGTH OF SOUND CORES>4 IN./LENGTH CORED, %
S-SPLIT SPOON SAMPLE
U-UNDISTURBED SAMPLE UF-FIXED PISTON
UO-OSTERBERG
▼ GROUNDWATER

NOTES:

NEW BEDFORD SUPERFUND SITE
NEW BEDFORD, MA
DATE 13 Nov87 PROJECT 87311

GEI

BORING LOG

SHEET 1 OF 1 16/48

PROJECT NAME NEW BEDFORD SUPERFUND SITE

PROJECT NO. 86C85548

DATE 10-27-86 GD

RIG Acker 82 Oct 30/01

Probe Hole/PL-1
Soccer Field
25

PROJECT LOCATION New Bedford, Mass.

LOGGED BY A. Brillinger DRILLED BY GZA

SURFACE ELEVATION 9.5 ELEVATION DATUM MLW

WATER ENTERS Not Measured

DEPTH	SAMPLE TYPE	SAMPLE REC	SAMPLE RESIST	DESCRIPTION	U.S.C.	SPECIAL NOTES AND FIELD OBSERVATIONS
0			17			Probe consists of AW rods with flat 1-3/8" tips pushed until resistance encountered and then driven with a 140 lb. hammer falling 30 inches.
			21			
			19			
			22			
			18			
5			25			
			25			
			18			
			19			
			23			
10			30			
			27			
			32			
			29			
			28			
15			37			
			31			
			34			
			35			
20						BOTTOM OF PROBE 19.0'

WOODWARD-CLYDE CONSULTANTS

17/48
G7 OCT 30/01

BORING LOG

NAME NEW BEDFORD SUPERFUND SITE

SHEET 1 OF 1
PROJECT NO. 86C8554B
DATE 10-27-8
RIG Acker
WATER ENTERS El. 3.61±

PROJECT LOCATION New Bedford, Mass.
LOGGED BY A. Brillinger DRILLED BY GZA
ELEVATION 10.1 ELEVATION DATUM MLW

SAMPLE TYPE	SAMPLE REC	SAMPLE RESIST	DESCRIPTION	U.S.C.	SPECIAL NOTES AND FIELD OBSERVATIONS
SS	18/24	5 13 23 27	Black SILT, CLAY and Brick fragments Becoming brown to black, poorly graded, Silty SAND with Clay, Gravel and brick fragments	SM	Boring advanced with 3-3/4" augers and a 1-3/8" IDSS Sampler with a 140 lb. hammer dropping 30 inches
					Fill
SS	0/25	20 21 21 15	Dense, brown, poorly graded, Silty SAND with shells	SM	Augers grinding at 3-3.5'. Alluvium ← Water Enters ATD
SS	24/24	5 7 7 10	Loose to dense, green-gray SILT with Gravel and Sand	ML	Alluvium
SS	24/24	6 11 15 21	Becoming dense, poorly graded, Silty SAND	SM	
SS	21/24	4 10 11 15	Becoming loose to dense		Hole augered to 20'; sampled to 22'.
					BOTTOM OF BORING 22.0'

BEARING CAPACITY + SUBGRADE MODULUS ESTIMATES.

(a). OCT 30/01

) MASS. STATE BUILDING CODE. (pg 311) CMR 1804.0

q_a - ALLOWABLE BEARING CAPACITY. (ton/ft^2)

FROM TABLE 1804.3
MATERIAL #6 MEDIUM DENSE $\boxed{q_a = 3\ ton/ft^2.}$

FROM BOWLES 2000 pg. 503.

k_s - SUBGRADE MODULUS.

$k_s = 12(SF)\,q_a \quad k/ft^3$ ← SF = 2 SANDS.

$k_s = 12(2)\,3\ ton/ft^3 \cdot 2\ \frac{k}{ton}$

$k_s = 144\ k/ft^3$

$\boxed{k_s \sim 72\ ton/ft^3}$

B) STANDARD PENETRATION VALUES.

$N = 20$ NO CORRECTION SINCE BELOW WATER TABLE.

$$q_a = \frac{N}{F_2}\left(\frac{B+F_3}{B}\right)^2 k_d \qquad B > F_4$$

ASSUME $B = 4'$ TYPICAL
$D = 4'$ FROST DEPTH

$F_2 = 4$

$F_3 = 1$

$k_d = \left(1 + 0.33\frac{D}{B}\right)$

$$q_a = \frac{20}{4}\left(\frac{4+1}{4}\right)^2\left[1 + 0.33\left(\frac{4}{4}\right)\right] = 10.3906\ k/ft^3.$$

$q_a = 10.3906\ k/ft^3$

Oct 30/01

$\sim 5\ ton/ft^3$

$k_s = 12\,(SF)\,q_a$

$k_s = 12\,(2)\,5\,(2)\ \frac{ton}{ft^3}\ \frac{k}{ton}$

$k_s = 240\ \frac{k}{ft^3}$

$k_s \sim 120\ ton/ft^3$

20/48

OCT 30/01

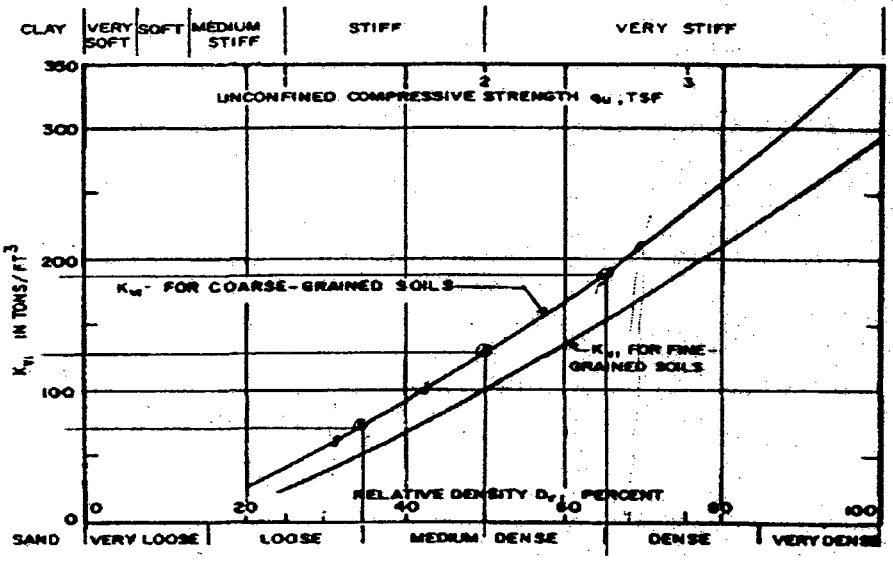

DEFINITIONS

ΔH_i = IMMEDIATE SETTLEMENT OF FOOTING
q = FOOTING UNIT LOAD IN tsf
B = FOOTING WIDTH
D = DEPTH OF FOOTING BELOW GROUND SURFACE
K_{vi} = MODULUS OF VERTICAL SUBGRADE REACTION

COARSE-GRAINED SOILS

(MODULUS OF ELASTICITY INCREASING LINEARLY WITH DEPTH)
SHALLOW FOOTINGS $D \leq B$
FOR $B \leq 20$ FT:

$$\Delta H_i = \frac{4\, q\, B^2}{K_{vi}\,(B+1)^2}$$

FOR $B \geq 40$ FT:

$$\Delta H_i = \frac{2\, q\, B^2}{K_{vi}\,(B+1)^2}$$

INTERPOLATE FOR INTERMEDIATE VALUES OF B

DEEP FOUNDATION $D \geq 5B$
FOR $B \leq 20$ FT:

$$\Delta H_i = \frac{2\, q\, B^2}{K_{vi}\,(B+1)^2}$$

NOTES: 1. NONPLASTIC SILT IS ANALYZED AS COARSE-GRAINED SOIL WITH MODULUS OF ELASTICITY INCREASING LINEARLY WITH DEPTH.
2. VALUES OF K_{vi} SHOWN FOR COARSE-GRAINED SOILS APPLY TO DRY OR MOIST MATERIAL WITH THE GROUNDWATER LEVEL AT A DEPTH OF AT LEAST 1.5B BELOW BASE OF FOOTING. IF GROUNDWATER IS AT BASE OF FOOTING, USE $K_{vi}/2$ IN COMPUTING SETTLEMENT
3. FOR CONTINUOUS FOOTINGS MULTIPLY THE SETTLEMENT COMPUTED FOR WIDTH "B" BY 2.

FIGURE 6
Instantaneous Settlement of Isolated Footings on Coarse-Grained Soils

RELATIVE DENSITY

N	RELATIVE DENSITY	D_r %
10 - 30	MEDIUM	35 TO 65

ASSUME LINEAR
EXTRAPOLATE

$$\frac{20-10}{30-10} = \frac{x-35}{65-35}$$

$x = 50$

$D_r = 50\%$

From FIGURE 6 $D_r = 50\%$.

$K_{v_i} = 125$ ton/ft^3

21/48

G7 OCT 34/01

CHAPTER 18

FOUNDATIONS AND RETAINING WALLS

(This Chapter is unique to Massachusetts)

780 CMR 1801.0 GENERAL

1801.1 Scope: The provisions of 780 CMR 18 shall control the foundation design and construction of all buildings and structures hereafter erected to insure adequate strength of all parts thereof for the safe support of all superimposed *live* and *special loads*, in addition to their own *dead load*, without exceeding the allowable stresses or design capabilities.

780 CMR 1802.0 FOUNDATION INVESTIGATIONS

1802.1 Where required: Borings, test pits or other soil investigations shall be required for all structures except the following, unless specifically required by the code official:

1. one- and two-family dwellings and their accessory buildings;
2. structures less than 35,000 cubic feet in gross volume; or
3. structures used for agricultural purposes.

The borings, test pits or other soil investigations shall be adequate in number and depth and so located to accurately define the nature of the subsurface materials necessary for the support of the structure. When it is proposed to support the structure directly on bedrock, the code official shall require core borings to be made into the rock; or shall require other satisfactory evidence to prove that the structure shall be adequately founded on bedrock.

1802.1.1 Seismic investigation: Where the foundation investigation indicates subsoils of Material Classes 8 or 9, as defined in Table 1804.3, a soil investigation report which evaluates the potential hazards due to liquefaction and slope instability during an earthquake shall be submitted to the code official. The liquefaction evaluation shall be performed in accordance with 780 CMR 1805.3

1802.2 Soil samples and boring reports: Samples of the strata penetrated in test borings or test pits, representing the natural disposition and conditions at the site, shall be available for examination by the code official. Wash or bucket samples shall not be accepted. Duplicate copies of the results obtained from all borings and of all test results or other pertinent soil data shall be filed with the code official.

780 CMR 1803.0 SOIL BEARING TESTS

1803.1 General: Whenever the allowable bearing pressure on bearing materials is in doubt, the code official may require soil bearing tests. The tests shall be performed under the direction of a *registered design professional*. A complete record of the test results together with a soil profile shall be filed by the *registered design professional* who shall have a representative on the site during all boring and test operations.

1803.2 Loaded areas: The loaded area shall be approximately four square feet for all bearing materials; except that when the footing overlies wet clay or other soft materials, the test load shall be applied to an area of not less than ten square feet. Bearing tests shall be applied at the elevations of the proposed bearing surfaces of the structure; except that the load may be applied directly on the surface of compacted granular material. The excavation within three feet (1 m) surrounding an area to be tested shall be made not deeper than one foot (0.3 m) above the plane of application of the test. The test plate shall be placed with uniform bearing.

1803.3 Loading procedure: The application of the test load shall be in steps equal to not more than ½ the contemplated design bearing pressure, to at least twice the contemplated design bearing pressure. The unloading shall be at least two steps, to the design pressure and then to zero load. The contemplated design pressure and twice the contemplated design pressure shall be maintained constant for at least 24 hours and until the movement does not exceed two hundredths of an inch (0.5 mm) during a 24-hour period. The load for all other load and unload steps including the zero load at the end of the test shall be maintained constant for a period of not less than four hours. Sufficient readings for each load step shall be made to define properly the time-deflection curve.

1803.4 Accuracy of loading: Test loads applied by mechanical devices shall be automatically controlled so as to insure not more than a 5% variation in applied load. Such devices shall be calibrated prior to the test.

1803.5 Test acceptance: The proposed design load shall be allowed provided that the requirements of 780 CMR 1805.5 are fulfilled and the settlements under the design bearing pressure and twice the design bearing pressure do not exceed ⅜ of an inch (10 mm) and one inch (25 mm), respectively.

22/48
a7 0c730/01

780 CMR 1804.0 LOAD BEARING VALUE OF SOILS

1804.1 Soils report: All applications for permits for the construction of new buildings or structures, and for the *alteration* of permanent structures which require changes in foundation loads and distribution, shall be accompanied by a report describing the soil in the ultimate loadbearing strata, including sufficient data to establish its character, nature and loadbearing capacity. The report shall be prepared by a *registered design professional.*

1804.2 Satisfactory foundation materials: Satisfactory bearing strata to provide structural support shall be considered to include the following: natural strata of rock, gravel, sand, inorganic silt, inorganic clay, or combination of these materials provided that they do not overlie an appreciable amount of peat, organic silt, soft clay or other objectionable materials. Compacted fills, when designed and monitored by a *registered design professional,* may be accepted by the code official. Other conditions of unsatisfactory bearing materials which are improved in accordance with the recommendations of, and monitored by, a *registered design professional* may be accepted by the code official.

1804.2.1 Loading interaction: Wherever bearing strata are subject to interaction from other loadings or strata reactions, such conditions shall be incorporated in the evaluation of the design bearing capacity of the support strata.

1804.2.2 Protection of bearing strata: Bearing strata which may be adversely affected by conditions within the structure, such as evaporation and shrinkage due to excess heat or cold, shall be adequately protected.

1804.3 Presumptive load bearing values: The maximum allowable pressure on supporting soils under spread footings at or near the surface shall not exceed the values specified in Table 1804.3 or the maximum allowable pressure shall be determined by load tests conducted in the field or as otherwise provided herein. Presumptive loadbearing values shall apply to all materials with similar physical characteristics. Surface values shall be adjusted for deep footings and for weaker loadbearing strata below piles, as provided for in 780 CMR 1817.8. Higher allowable bearing pressures may be approved by the code official when substantiated by the results of investigations, analyses or testing prepared by a *registered design professional.*

1804.3.1 Classification of bearing materials: The terms used in 780 CMR 1804 shall be interpreted in accordance with generally accepted engineering nomenclature. Refer to commentary in Appendix D for guidelines regarding soil and rock classification and description.

1804.3.2 Prepared fill: Materials from Classes 6 through 8, Table 1804.3, or dense graded crushed stone or slag, which contain no plastic fines, shall have a maximum allowable bearing pressure of up to five tons per square foot when compacted to 95% or greater of the maximum dry density as determined by ASTM D1557 listed in ***Appendix A***. For compacted fills which do not meet the above criteria or materials which cannot be tested as above, a *registered design professional* shall be engaged to provide recommendations for compaction and maximum allowable design bearing pressures.

1804.3.3 Field Control: The code official will require that a *registered design professional* or his representative be on the project at all times while fill is being placed and compacted. The representative shall make an accurate record of the types of materials used, including grain-size curves, thickness of lifts, densities, percent compaction, type of compacting equipment and number of coverages, the use of water and other pertinent data.

23|48

G7 oct 30/01

Table 1804.3
ALLOWABLE BEARING PRESSURES FOR
FOUNDATION MATERIALS

Material Class	Description	Notes	Consistency in Place[1]	Allowable Net Bearing Pressure (tons/ft²)
1a	Massive bedrock: Granite, diorite gabbro, basalt, gneiss	3	Hard, sound rock, minor jointing	100
1b	Quartzite, well cemented conglomerate	3	Hard, sound rock moderate jointing	60
2	Foliated bedrock: slate, schist	3	Medium hard rock, minor jointing	40
3	Sedimentary bedrock: cementation shale, siltstone, sandstone, limestone, dolomite, conglomerate	3, 4	Soft rock, moderate jointing	20
4	Weakly cemented sedimentary bedrock: compaction shale or other similar rock in sound condition	3	Very soft rock	10
5	Weathered bedrock: any of the above except shale	3, 5	Very soft rock, weathered and/or major jointing and fracturing	8
6	Slightly cemented sand and/or gravel, glacial till (basal or lodgement), hardpan	7,8	Very dense	10
7	Gravel, widely graded sand and gravel, and granular ablation till	6, 7, 8	Very dense Dense Medium dense Loose Very loose	8 6 4 2 Note 11
8	Sands and non-plastic silty sands with little or no gravel (except for Class 9 materials)	6, 7, 8, 9	Dense Medium dense Loose Very loose	4 3 2 Note 11
9	Fine sand, silty fine sand, and non-plastic inorganic silt	6, 7, 9	Dense Medium dense Loose Very loose	3 2 1 Note 11
10	Inorganic sandy or silty clay, clayey sand, clayey silt, clay, or varved clay; low to high plasticity	5, 6, 10	Hard Stiff Medium Soft	4 2 1 Note 11
11	Organic soils: peat, organic silt, organic clay	11		Note 11

Notes for Table 1804.3:

1. Refer to commentary in Appendix D regarding typical index test values that may be helpful as guides for evaluation of consistency in place.
2. Refer to 780 CMR 1807.0 for determination of design loads and for special cases.
3. The allowable bearing pressures may be increased by an amount equal to 10% for each foot of depth below the surface of sound rock; however, the increase shall not exceed two times the value given in the table.
4. For limestone and dolomite, the bearing pressures given are acceptable only if an exploration program performed under the direction of a *registered design professional* demonstrates that there are no cavities within the zone of influence of the foundations. If cavities exist, a special study of the foundation conditions is required.
5. Weathered shale and/or weathered compaction shale shall be included in Material Class 10. Other highly weathered rocks and/or residual soils shall be treated as soil under the appropriate description in Material Classes 6 to 10. Where the transition between residual soil and bedrock is gradual, a *registered design professional* shall make a judgment as to the appropriate bearing pressure.
6. Settlement analyses in accordance with 780 CMR 1805.5 should be performed if the ability of a given structure to tolerate settlements is in question, particularly for, but not limited to, soft or very soft clays and silts and loose granular materials.
7. Allowable bearing pressures may be increased by an amount equal to 5% for each foot of depth of the bearing area below the minimum required in 780 CMR 1806.0; however, the bearing pressure shall not exceed two times the value given in the table. For foundation bearing areas having a least lateral dimension smaller than three feet, the allowable bearing pressure shall be ⅓ of the tabulated value times the least dimension in feet.
8. Refer to 780 CMR1804.3 when these materials are used as compacted fills.
9. These materials are subject to the provisions in 780 CMR 1805.3 (Liquefaction).

24/48
97 OCT 30/01

10 Alternatively, the allowable bearing pressure may be taken as 1.5 times the peak unconfined compressive strength of undisturbed samples for square and round footings or 1.25 times that strength for footings with length to width ratio of 4 or greater. For intermediate cases, interpolation may be used.

11. A *registered design professional* shall be engaged to provide recommendations for these special cases. Direct bearing on organic soils is not permitted. Organic soils are allowed under foundations for those cases defined in 780 CMR 1804.4.2, Preloaded materials.

1804.4 Lightweight structures: One-story structures without masonry walls and not exceeding 800 square feet in area may be founded on a layer of satisfactory bearing material not less than three feet (1 m) thick, which is underlain by highly compressible material, provided that the stresses induced in the unsatisfactory material by the *live* and *dead loads* of the structure, and the weight of any new fill within or adjacent to the building area, will not exceed 250 pounds per square foot (250 psf).

1804.4.1 Bearing capacity for lightweight structures: Lightweight structures and accessory structures, such as garages and sheds, may be founded on normally unacceptable bearing strata, providing such material is determined by a *registered design professional* as being satisfactory for the intended use.

1804.4.2 Preloaded materials: The code official may allow the use of certain otherwise unsatisfactory natural soils and uncompacted fills for support of one-story structures after these materials have been preloaded to effective stresses not less than 150% of the effective stresses which will be induced by the live and *dead loads* of the structure.

1804.4.3 Load test: The code official may require the loading and unloading of a sufficiently large area, conducted under the direction of a *registered design professional* approved by the code official, who shall submit a report containing a program which will allow sufficient time for adequate consolidation of the material based on an analysis of the preloaded material and of the probable settlements of the structure.

780 CMR 1805.0 ALLOWABLE FOUNDATION LOADS

1805.1 General: The maximum allowable pressures on foundation materials shall be in accordance with 780 CMR 1804.0 and as modified herein.

1805.2 Soil Capacity: For the load combinations, including seismic as specified in 780 CMR 1616.0, the soil loadbearing strength shall be sufficient to resist loads at acceptable strain, considering both the duration of the loading and the dynamic properties of the soil. For foundations supported on or in Material Classes 1 through 6, as defined in Table 1804.3, or medium dense to very dense soils of Material Classes 7 through 9, or stiff to hard soil of Materials Class 10, the allowable bearing pressure or pile or pier capacity may be increased by up to 33% for load combinations that include wind or seismic loading.

1805.3 Liquefaction:

1. The earthquake liquefaction potential of saturated clean medium to fine sands shall be evaluated on the basis of Figure 1805.3 for cases where lateral sliding cannot occur.

Figure 1805.3
LIQUEFACTION SUSCEPTABILITY

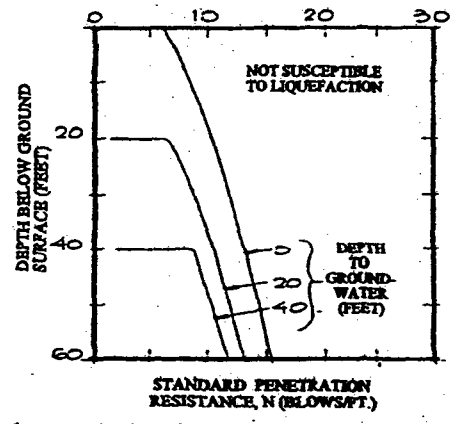

If the standard resistances, N, in all strata of medium to fine sand lie above the applicable curve in Figure 1805.3 the sands at the site shall not be considered subject to liquefaction. Liquefaction below a depth of 60 feet (18 m) from final grade need not be considered for level ground. For pressure-injected footings, the ten-foot (3-m) thickness of soil immediately below the bottom of the driven shaft shall not be considered subject to liquefaction.

2. Compacted granular fills shall not be considered subject to liquefaction provided they are systematically compacted to at least 93% of maximum dry density as determined in accordance with ASTM Standard Method D1557, listed in *Appendix A* or to a relative density of at least 60% in the case of granular soils having less than 10% by weight material passing the No. 200 U.S. Sieve.

3. For sites not meeting the above criteria, studies by a *registered design professional* shall be made to determine that the structural loads can be safely supported. Such studies might include the following:

- Investigations to establish that the soils at the site are not subject to liquefaction during the design earthquake as specified in 780 CMR 1612.0.

25/48
G7 OCT 30/01

- Design of foundations that will not fail either by loss of bearing capacity or excessive settlement if liquefaction occurs.
- Replacement or densification of liquefaction-susceptible soils such that liquefaction will not occur.

4. For sites underlain by saturated sands where lateral sliding (slope instability) may occur, studies by a *registered design professional* shall be made to establish the safety against sliding during an earthquake with a peak acceleration of 0.12 g and a frequency content similar to that implied by the modal seismic design coefficient set forth in 780 CMR 1612.0
5. For sites underlain by saturated silty sands and inorganic non-plastic silts, studies shall be made by a *registered design professional* to determine the susceptibility to liquefaction of these soils.

1805.4 Vertical pressure: The computed vertical pressure at any level beneath a foundation shall not exceed the allowable bearing pressure for the material at that level. Computation of the vertical pressure in the bearing materials at any depth below a foundation shall be made on the assumption that the load is spread uniformly at an angle of 30° with the vertical; but the area considered as supporting the load shall not extend beyond the intersection of 30° planes of adjacent foundations.

1805.5 Settlement analysis: Whenever a structure is to be supported by medium or soft clay (materials of Class 10) or other materials which may be subject to settlement or consolidation, the settlements of the structure and of neighboring structures due to consolidation shall be given careful consideration, particularly if the subsurface material or the loading is subject to significant variation. The code official may require a settlement analysis to be made by a *registered design professional* when the *live* and *dead loads* of the structure, as specified in this article, minus the weight of the excavated material, induce a maximum stress greater than 300 pounds per square foot at mid-depth of the underlying soft soil layer.

Settlement analysis will be based on a computation of the new increase in stress that will be induced by the structure and realistically appraised *live loads*, after deducting the weight of excavated material under which the soil was fully consolidated. The effects of fill loads within the building area or fill and other loads adjacent to the building shall be included in the settlement analysis. The appraisal of the *live loads* may be based on surveys of actual *live loads* of existing buildings with similar occupancy. The soil compressibility shall be determined by a *registered design professional.*

1805.6 Disturbance of bearing materials: Whenever the bearing materials are disturbed from any cause, for example, by the inward or upward flow of water and/or by construction activities, the extent of the disturbance shall be evaluated by a *registered design professional* and appropriate remedial measures satisfactory to the code official shall be taken.

1805.7 Rock foundations: Where subsurface explorations at the project site indicate variations or doubtful characteristics in the structure of the rock upon which it is proposed to construct foundations, a sufficient number of borings shall be made to a depth of not less than ten feet below the level of the foundations to provide assurance of the soundness of the foundation stratum and its bearing capacity. Refer to Table 1804.3 for allowable bearing pressures and special conditions.

The maximum presumptive loadbearing capacity of Class 1 or Class 2 rock may be increased where the surface is leveled or benched, provided that such increased safe capacity is determined by load tests on an area of not less than one square foot (0.093 m^2) in accordance with the provisions of 780 CMR 1803.0.

780 CMR 1806.0 DEPTH OF FOOTINGS

1806.1 Frost protection: All permanent supports of buildings and structures larger than 100 square feet (9.3 m^2) in area or ten feet (3 m) in height shall extend to a minimum of four feet (1.2 m) below finished grade except when erected upon sound bedrock or when protected from frost, or when the foundation grade is established by a *registered design professional* and as approved by the code official. Spread footings of adequate size shall be provided where necessary to distribute properly the load within the allowable load bearing value of the soil. Footings shall not bear on frozen soils.

1806.2 Isolated footings: Footings on granular soil of Classes 7, 8 and 9 of Table 1804.3 and compacted fill shall be so located that the line drawn between the lower edges of adjoining footings shall not have a steeper slope than 30° (0.52 rad) with the horizontal unless the material supporting the higher footing is braced or retained or otherwise laterally supported in an approved manner or a greater slope has been properly established by a *registered design professional.*

1806.3 Depth of spread foundations: The bottom surface of any footing resting on material of Classes 5 through 10 of Table 1804.3, shall be at least 18 inches (460 mm) below the lowest ground surface or the top surface of a floor slab bearing directly on the soil immediately adjacent to the footing.

780 CMR 1807.0 FOOTING DESIGN

1807.1 Design loads: The loads to be used in computing the pressure upon bearing materials directly underlying foundations shall be the *live* and

26/48
G7 Oct 30/01

dead loads of the structure, as specified in 780 CMR 1616.0 including the weight of the foundations and of any immediately overlying material, but deducting from the resulting pressure per square foot the total weight of a one-foot-square column of soil, including the water in its voids, which extends from the lowest immediately adjacent surface of the soil to the bottom of the footing, pier or mat. Foundations shall be constructed so as to resist the maximum probable hydrostatic pressures.

1807.2 Vibratory loads: Where machinery operations or other vibrations are transmitted through the foundation, consideration shall be given in the footing design to prevent detrimental disturbances of the soil.

1807.3 Varying unit pressures: Footings shall be so designed that the unit soil pressure under the *dead load* shall be as uniform as possible under all parts of the building structure. When necessary for stability in the structure due to settlement or varying soil conditions, approved variations are permitted in the unit pressure under different footings.

1807.4 Eccentric loads: Eccentricity of loadings in foundations shall be fully investigated, and the maximum pressure on the basis of straight-line distribution shall not exceed the allowable bearing pressures.

1807.5 Protection of footings: Trenching installed parallel to footings shall not extend below the line of a 45°. (0.79 rad) angle downward from the loadbearing plane of the footing.

780 CMR 1808.0 TIMBER FOOTINGS AND WOOD FOUNDATIONS

1808.1 Timber footings: Timber footings are permitted for buildings of Type 5 construction and as otherwise approved. Such footings shall be treated in accordance with AWPA C2 or C3 listed in *Appendix A*. Treated timbers are not required where placed entirely below permanent water level, or where used as capping for wood piles which project above the water level over submerged or marsh lands. The compressive stresses perpendicular to grain in untreated timber footings supported upon piles shall not exceed 70% of the allowable stresses for the species and grade of timber as specified in NFoPA NDS listed in *Appendix A*.

1808.2 Pole buildings: Pole-type buildings shall be designed and erected in accordance with AWPI *Pole Building Design* listed in *Appendix A*. The poles shall be treated in accordance with AWPA C2 or C4 listed in *Appendix A*.

1808.3 Wood foundations: Wood foundation systems shall be designed and installed in accordance with NFoPA TR7 listed in *Appendix A*. All lumber and plywood shall be treated in accordance with AWPA C22 listed in *Appendix A* and shall be identified in accordance with 780 CMR 2311.3.1.

780 CMR 1809.0 STEEL GRILLAGES

1809.1 General: All steel grillage beams shall be separated with approved steel spacers and shall be entirely encased in at least three inches (76 mm) of concrete, and the spaces between the beams shall be completely filled with concrete or cement grout. Where used on yielding soils, steel grillages shall rest on approved concrete beds not less than six inches (152 mm) thick.

780 CMR 1810.0 CONCRETE FOOTINGS

1810.1 Concrete strength: Concrete in footings shall have a specified compressive strength of not less than 2,500 psi (1.76 kg/mm^2) at 28 days.

1810.2 Design: Concrete footings shall comply with 780 CMR 19 and ACI 318 or ACI 318.1 listed in *Appendix A*.

1810.2.1 Footing seismic ties: Individual spread footings, located on soil profile type S2, S3 or S4, in accordance with 780 CMR 1612.4.2, and supporting buildings assigned to *Seismic Performance Category D*, in accordance with 780 CMR 1612.2.7, shall be interconnected by ties. All ties shall be capable of resisting, in tension or compression, a force equal to 10% of the larger column *dead plus live load*. Individual tie beams are not required when it is demonstrated that equivalent restraint will be provided by structural members within slabs on grade or reinforced concrete slabs on grade or confinement be competent rock, hard cohesive soils, very dense granular soils or other approved means.

1810.3 Thickness: The thickness of concrete footings shall comply with 780 CMR 1810.3.1 and 1810.3.2.

1810.3.1 Plain concrete: In plain concrete footings, the edge thickness shall not be less than eight inches (203 mm) for footings on soil; except that for occupancies of Use Group R-3 and buildings less than two stories in *height* of Type 5 construction, the required edge thickness shall be six inches (152 mm) provided that the footing does not extend beyond four inches (102 mm) on either side of the supported wall.

1810.3.2 Reinforced concrete: In reinforced concrete footings, the thickness above the bottom reinforcement shall not be less than six inches (152 mm) for footings on soil. The clear cover on reinforcement where the concrete is cast against the earth shall not be less than three inches (76 mm). Where concrete is exposed to soil after

27/48

G7 OCT 30/0.

it has been cast, the clear cover shall not be less than 1½ inches (38 mm) for reinforcement of No. 5 bars or ⅝-inch (16 mm) diameter wire or smaller, nor less than two inches (51 mm) for larger reinforcement.

1810.4 Deposition: Concrete footings shall not be placed through water unless otherwise approved. Where placed under or in the presence of water, the concrete shall be deposited by approved means to insure minimum segregation of the mix and negligible turbulence of the water.

1810.5 Protection of concrete: Concrete footings shall be protected from freezing during depositing and for a period of not less than five days thereafter. Water shall not be allowed to flow through the deposited concrete.

1810.6 Forming of concrete: Concrete footings shall not be cast against the earth where, in the opinion of the code official, soil conditions warrant forming. Where forming is required, forming shall be in accordance with Chapter 6 of ACI 318 listed in *Appendix A*.

780 CMR 1811.0 MASONRY-UNIT FOOTINGS

1811.1 Dimensions: Masonry-unit footings shall be laid in Type M or S mortar complying with 780 CMR 2105.7, and the depth shall not be less than twice the projection beyond the wall, pier or column. The width shall not be less than eight inches (203 mm) wider than the wall supported thereon.

1811.2 Offsets: The maximum offset of each course in brick foundation walls stepped up from the footings shall be 1½ inches (38 mm), if laid in single courses, and three inches (76 mm), if laid in double courses.

780 CMR 1812.0 FOUNDATION WALLS

1812.1 Design: Foundation walls shall be designed to resist frost action and to support safely all vertical and *lateral loads* as provided for in 780 CMR 16. The maximum stresses caused by combined loads shall be within the values specified for the materials used in the construction. Unless properly reinforced, tensile stresses shall not exceed those permitted in plain masonry.

1812.2 Definitions: The following words and terms shall, for the purposes of 780 CMR 1812 and as used elsewhere in 780 CMR, have the meanings shown herein.

Foundation wall: A wall below the floor nearest grade which serves as a support for a wall, pier, column or other structural part of a building.

Retaining wall: A wall designed to resist the lateral displacement of soil or other material.

1812.3 Minimum thickness: The thickness of foundation walls shall not be less than the thickness of the wall supported, and the minimum thickness shall be limited for the various materials of construction as herein specified. Eight-inch foundation walls shall be permitted under brick-veneered frame and under ten-inch cavity walls where the total height of the wall supported, including gables, is not more than 20 feet (6 m).

1812.3.1 Reinforced concrete: Reinforced concrete exterior foundations and exterior and interior *basement* walls which retain or support the lateral pressure of earth or water shall not be less than 7½ inches (191 mm) thick.

1812.3.2 Hollow and solid masonry and plain concrete: The thickness of masonry foundation walls shall not be less than shown in Table 1812.3.2 for the type of foundation used. Where the height of the unbalanced fill (height of finished ground level above the *basement* floor or inside ground level) exceeds eight feet (2.4 m) or where the equivalent fluid weight of the unbalanced fill exceeds 30 pounds per cubic foot (pcf) (146 kg/m^3) or where the height of the foundation wall between lateral supports exceeds eight feet (2.4 m), the foundation wall thickness shall be determined by structural analysis in accordance with ACI 530/ASCE 5/ TMS 402 or ACI 318.1 listed in *Appendix A*.

Table 1812.3.2
THICKNESS OF FOUNDATION WALLS

Foundation wall construction	Thickness[b] (inches)	Maximum depth of unbalanced fill[a] (feet)
Masonry of hollow units	8	4
Ungrouted	10	5
	12	6
Masonry of hollow units reinforced vertically with #4 bars and grout at 24" o.c. Bars located not less than 4½" from pressure side of wall[c]	8	7
	10	8
	12	8
Masonry of solid units	8	5
	10	6
	12	7
Plain concrete or masonry of hollow or solid units fully grouted	8	7
	10	8
	12	8

Note a. Maximum depths of unbalanced fill shall be permitted to be increased with the approval of the code official where soil conditions or local experience warrant such increase.

Note b. The actual thickness shall not be more than ½ inch less than the required nominal thickness specified in the table.

Note c. Other bar sizes and spacings shall be permitted as determined by structural analysis as required in ACI 530/ASCE 5/TMS 402 listed in *Appendix A*.

28/48

a) oct 30/01

Note d 1 inch = 25.4 mm; 1 foot = 304.8 mm.

1812.3.3 Hollow-unit walls: Foundation walls of approved hollow masonry units shall be provided with not less than four inches (102 mm) of solid masonry at girder supports, or shall be strengthened with buttresses.

1812.3.4 Rubble stone: Foundation walls of rough or random rubble stone shall not be less than 16 inches (406 mm) thick.

1812.3.5 Bonding: All foundation walls shall be bonded as required for superstructure walls in 780 CMR 2110.0.

1812.4 Increased thickness with depth: Where any foundation wall, other than a wall that is designed as a retaining wall, extends more than 12 feet (3.7 m) below the top of the first floor beams, the thickness of the wall shall be increased four inches (102 mm) for each additional 12 feet (3.7 m) or fraction thereof in depth.

1812.5 Corbels on eight-inch walls: Where an eight-inch (203 mm) wall is corbelled, the top corbel shall be a full course of headers at least six inches (152 mm) in length, extending not higher than the bottom of the floor framing. The maximum projection of one unit shall exceed neither ½ of the depth of the unit nor ⅓ of its width at right angles to the face which is offset.

1812.6 Lateral stability: Foundation walls of buildings and structures which serve as retaining walls shall conform to the applicable requirements of 780 CMR 1825.0, and shall be strengthened with buttresses or additional wall thickness to resist lateral soil and hydrostatic pressure where subjected thereto, and to resist seismic loads as required by 780 CMR 1612.4.9.

780 CMR 1813.0 WATERPROOFING AND DAMPPROOFING

1813.1 Where required: Walls or portions thereof that retain earth and enclose interior spaces and floors below grade shall be waterproofed and dampproofed in accordance with 780 CMR 1813.0, with the exception of those spaces containing use groups other than residential and institutional where such omission is not detrimental to the building or occupancy.

1813.1.1 Story above grade: Where a *basement* is considered a *story above grade* and the finished ground level adjacent to the *basement* wall is below the *basement* floor elevation for 25% or more of the perimeter, the floor and walls shall be dampproofed in accordance with 780 CMR 1813.3 and a foundation drain shall be installed in accordance with 780 CMR 1813.5.2. The foundation drain shall be installed around the portion of the perimeter where the *basement* floor is below ground level. The provisions of 780 CMR 1813.2, 1813.4 and 1813.5.1 shall not apply in this case.

1813.1.2 Underfloor space: The finished ground level of an underfloor space such as a crawl space shall not be located below the bottom of the footings. Where there is evidence that the ground water table rises to within six inches (152 mm) of the ground level at the outside building perimeter or where there is evidence that the surface water does not readily drain from the building site, the ground level of the underfloor space shall be as high as the outside finished ground level, unless an approved drainage system is provided. The provisions of 780 CMR 1813.2, 1813.3, 1813.4, 1813.5 and 1813.6 shall not apply in this case.

1813.2 Ground water table investigation: The owner or applicant shall perform a subsurface soil investigation in accordance with 780 CMR 1802.0 to determine the possibility of the ground water table rising above the proposed elevation of the floor or floors below grade.

Exception: A subsurface soil investigation shall not be required where:
1. Waterproofing is to be provided;
2. Satisfactory data from adjacent areas are available which demonstrate that ground water has not been a problem; or
3. Floodproofing is to be provided in accordance with 780 CMR 3107.0.

1813.2.1 Ground water control: Where the ground water table is lowered and maintained at an elevation not less than six inches (152 mm) below the bottom of the lowest floor, the floor and walls shall be dampproofed in accordance with 780 CMR 1813.3. The design of the system to lower the ground water table shall be based upon accepted principles of engineering which shall consider, but not necessarily be limited to: permeability of the soil; rate at which water enters the drainage system; rated capacity of pumps; head against which pumps are to pump; and the rated capacity of the disposal area of the system. The design shall also take into account any adverse impacts on utilities, structures or other facilities in the vicinity which would result from the lowering of groundwater levels.

1813.3 Dampproofing required: Where hydrostatic pressure will not occur as determined by 780 CMR 1813.2, floors and walls for other than wood foundation systems shall be dampproofed in accordance with 780 CMR 1813.0. Wood foundation systems shall be constructed in accordance with NFoPA TR7 listed in *Appendix A*.

1813.3.1 Floor applications: The required dampproofing materials shall be installed between the floor and the base course required by

29/48
G7 Oct 30/01

780 CMR 1813.5.1, except where a separate floor is provided above a concrete slab.

1813.3.1.1 Floor dampproofing materials: Where installed beneath the slab, dampproofing shall consist of not less than 6-mil (.006 inch; 152 μm) polyethylene with joints lapped not less than six inches (152 mm), or other approved methods or materials. Where permitted to be installed on top of the slab, dampproofing shall consist of mopped-on bitumen, not less than 4-mil (.004 inch; 102 μm) polyethylene, or other approved methods or materials. Joints in the membrane shall be lapped and sealed in accordance with the manufacturer's installation instructions.

1813.3.2 Walls: Dampproofing materials shall be installed on the exterior surface of walls and shall extend from the top of the footing to above ground level.

1813.3.2.1 Surface preparation of walls: Prior to application of dampproofing materials on concrete walls, all holes and recesses resulting from the removal of form ties shall be sealed with a bituminous material or other approved methods or materials. Unit masonry walls shall be parged on the exterior surface below ground level with not less than ⅜ inch (10 mm) of portland cement mortar. The parging shall be coved at the footing.

Exception: Parging of unit masonry walls is not required where a material is approved for direct application to the masonry.

1813.3.2.2 Wall dampproofing materials: Dampproofing shall consist of a bituminous material, three pounds per square yard of acrylic modified cement, ⅛-inch coat of surface-bonding mortar complying with ASTM C887 listed in *Appendix A*, any of the materials permitted for waterproofing by 780 CMR 1813.4.2.2, or other approved methods or materials.

1813.4 Waterproofing required: Where the ground water investigation required by 780 CMR 1813.2 indicates that a hydrostatic pressure condition exists, walls and floors shall be waterproofed in accordance with 780 CMR 1813.4.

1813.4.1 Floors: Floors required to be waterproofed shall be of concrete, designed and constructed to withstand the hydrostatic pressures to which the floors will be subjected.

1813.4.1.1 Floor waterproofing materials: Waterproofing shall be accomplished by placing a membrane of rubberized asphalt, butyl rubber, neoprene, or not less than 6-mil (.006 inch; 152 μm) polyvinyl chloride or polyethylene with joints lapped not less than six inches (152 mm) or other approved materials under the slab. Joints in the membrane shall be lapped and sealed in accordance with the manufacturer's installation instructions.

1813.4.2 Walls: Walls required to be waterproofed shall be of concrete or masonry and shall be designed and constructed to withstand the hydrostatic pressures and other *lateral loads* to which the walls will be subjected.

1813.4.2.1 Surface preparation of walls: Prior to the application of waterproofing materials on concrete or masonry walls, the walls shall be prepared in accordance with 780 CMR 1813.3.2.1.

1813.4.2.2 Wall waterproofing materials: Waterproofing shall be applied from the bottom of the wall to not less than 12 inches (305 mm) above the maximum elevation of the ground water table. The remainder of the wall shall be dampproofed in accordance with 780 CMR 1813.3.2.2. Waterproofing shall consist of two-ply hot-mopped felts, not less than 6-mil (.006-inch; 152-μm) polyvinyl chloride, 40-mil (.040-inch; 1 mm) polymer-modified asphalt, 6-mil (.006-inch; 152-μm) polyethylene or other approved methods or materials capable of bridging nonstructural cracks. Joints in the membrane shall be lapped and sealed in accordance with the manufacturer's installation instructions.

1813.4.3 Joints and penetrations: Joints in walls and floors, joints between the walls and floor, and penetrations of the wall and floor shall be made water tight utilizing approved methods and materials.

1813.5 Subsoil drainage system: Where a hydrostatic pressure condition does not exist, dampproofing shall be provided and a base shall be installed under the floor and a drain installed around the foundation perimeter. A subsoil drainage system designed and constructed in accordance with 780 CMR 1813.2.1 shall be deemed adequate for lowering the groundwater table.

1813.5.1 Floor base: Floors of *basements*, except as provided for in 780 CMR 1813.1.1, shall be placed over a base course not less than four inches (102 mm) in thickness that consists of gravel or crushed stone containing not more than 10% of material that passes through a No. 4 sieve.

Exception: Where a site is located in well-drained gravel or sand/gravel mixture soils, a floor base is not required.

1813.5.2 Foundation drain: A drain shall be placed around the perimeter of a foundation that consists of gravel or crushed stone containing not more than 10% material that passes through a No. 4 sieve. The drain shall extend a minimum of

30/48

12 inches (102 mm) beyond the outside edge of the footing. The thickness shall be such that the bottom of the drain is not higher than the bottom of the base under the floor, and that the top of the drain is not less than six inches (152 mm) above the top of the footing. The top of the drain shall be covered with an approved filter membrane material. Where a drain tile or perforated pipe is used, the invert of the pipe or tile shall not be higher than the top of the lowest floor elevation. The top of joints shall be protected with an approved filter membrane material. The pipe or tile shall be placed on not less than two inches (51 mm) of gravel or crushed stone complying with 780 CMR 1813.5.1, and shall be covered with not less than six inches (152 mm) of the same material.

1813.5.3 Drainage disposal: The floor base and foundation perimeter drain shall discharge by gravity or mechanical means into an approved drainage system that complies with the plumbing code (248 CMR) listed in ***Appendix A***.

Exception: Where a site is located in well-drained gravel or sand/gravel mixture soils, a dedicated drainage system is not required.

1813.6 Placement of backfill: The excavation outside the foundation shall be backfilled with soil that is free of organic material, construction debris and large rocks. The backfill shall be placed in lifts and compacted in a manner which does not damage the foundation, the waterproofing or the dampproofing material.

1813.7 Site grading: The ground immediately adjacent to the foundation shall be sloped away from the building at a slope of not less than one unit vertical in 12 units horizontal (1: 12) for a minimum distance of eight feet (2.4 m) measured perpendicular to the face of the wall or an approved alternate method of diverting water away from the foundation shall be used. The procedure utilized to establish the final ground level adjacent to the foundation shall account for all additional settlement of the backfill.

1813.8 Erosion protection: Where water impacts the ground from the edge of the roof, downspout, scupper or other rainwater collection or diversion device, provisions shall be made to prevent soil erosion and direct the water away from the foundation.

780 CMR 1814.0 MAT, RAFT AND FLOAT FOUNDATIONS

1814.1 General: Mat, raft and float foundations shall only be used where the applied loads of the building or structure are so arranged as to result in practically uniformly balanced loading, and the soil immediately below the mat is of uniform loadbearing capacity. The characteristics of the soil under the mat or raft shall be considered in the analysis of loading on mats and other continuous footings, and due allowance shall be made for possible concentrated soil pressures under heavily loaded columns.

1814.2 Settlement Analysis: The design of floating foundations shall include a settlement analysis in accordance with the provisions on 780 CMR 1805.5.

780 CMR 1815.0 PIER FOUNDATIONS

1815.1 General: A foundation pier is here defined as a structural member which extends to satisfactory bearing materials to develop support by end bearing and/or friction in those materials. The pier shall be constructed by advancing a hole to the required depth using non-displacement methods and filling the hole with reinforced or plain concrete. 780 CMR 1815.0 includes foundation types referred to as drilled piers, drilled shafts and caissons, including both circular and non-circular foundation elements. Uncased piles installed by the hollow stem auger method are included in 780 CMR 1820.2, Augered uncased piles.

The minimum dimension of the pier shall be no less than 12 inches (305 mm). The base may be enlarged by belling to increase the bearing area.

1815.1.1 Special types of piers: Types of piers not specifically covered by the provisions of 780 CMR 1815.0 may be permitted, subject to the approval of the code official, upon the submission of acceptable test data and design and construction information prepared by a *registered design professional* stating that the pier installation is adequate to fulfill the design requirements.

1815.2 Seismic design:

1815.2.1 Foundation ties: Pier foundations shall be interconnected by ties capable of resisting, in tension or compression, a force equal to 10% of the larger column *dead* plus *live load*. Individual tie beams are not required when it is demonstrated that equivalent restraint will be provided by structural members within slabs on grade or reinforced concrete slabs on grade or confinement by competent rock, hard cohesive soils, dense granular soils or other approved means.

1815.2.2 Seismic reinforcement: Cast in place concrete piers shall have minimum reinforcement of 0.25% of the minimum pier design cross-sectional area for buildings assigned to *Seismic Performance Category C*, and a minimum reinforcement of 0.50% for buildings assigned to *Seismic Performance Category D* in accordance with 780 CMR 1612.2.7. The minimum pier design cross-sectional area is that area determined in accordance with 780 CMR 1815.6. (The actual

31/48

G7 OCT 30/01

constructed cross-sectional area may be larger.) The reinforcing shall be placed in the top ⅓ of the pier length or extend ten feet (3 m) from the top of the pier, whichever is the longer length.

For *Seismic Performance Category C* buildings, the pier reinforcing shall be a minimum of four longitudinal bars with closed ties, or equivalent spirals, having a minimum diameter of ¼ inch. The ties shall be provided at a maximum spacing of 16 times the longitudinal reinforcing bar diameter and shall enclose an area of concrete sufficient to confine the minimum design cross-sectional concrete area. The maximum tie spacing in the top two feet (0.6 m) of the pier length shall be four inches (102 mm). Tie detailing shall be in accordance with 780 CMR 1903.4.

For *Seismic Performance Category D* buildings, the pier reinforcing shall be a minimum of four longitudinal bars with closed ties, or equivalent spirals, having a minimum diameter of ⅜ inch, for piers with a diameter of 20 inches (508 mm) or less; and a minimum tie diameter of ½ inch, for piers with a diameter more than 20 inches (508 mm). The ties shall be provided at a maximum spacing of eight times the longitudinal reinforcing bar diameter. The maximum tie spacing in the top four feet (1.2 m) of the pier length shall be three inches (76 mm). Tie detailing shall be in accordance with 780 CMR 1903.5.

Exception: Pier ties or spirals are not required where permanent metal casing (steel pipe, steel tube or spiral-welded steel shell) is used, provided the casing has minimum thickness as follows: for *seismic Performance Category C* buildings, 0.058 inch (1.5 mm), and for *Category Performance Category D* buildings, 0.070 inch (1.8 mm). The steel casing must be adequately protected from corrosion due to soil, changing water levels, or other subgrade conditions indicated by the site soil investigation.

1815.2.3 Pier cap connection: All piers shall be connected to the pier cap so that pier reinforcement is embedded in the cap for a distance equal to the development length as specified in ACI 318 listed in *Appendix A*. Field-placed dowels anchored in the concrete piers are acceptable. The development length to be provided is the full development length of the reinforcement for compression without reduction in length for excess area.

1815.2.4 Alternative detailing: Alternative measures for laterally confining concrete and maintaining toughness and ductile-like behavior at the top of the pier shall be permitted provided consideration is given to forcing the hinge to occur in the confined region.

1815.3 Installation: In unstable soils, a temporary casing or slurry shall be used to stabilize the excavation. When a slurry is used to stabilize the excavation, the level and quality of the slurry shall be monitored and controlled to maintain stability of the shaft and the bearing surface.

1815.4 Enlarged bases: Bell-shaped bases shall have a minimum edge thickness of four inches (102 mm). The bell roof shall slope not less than 60° with the horizontal unless the base is designed in accordance with ACI 336 listed in *Appendix A* (hereinafter ACI 336).

1815.5 Placement of concrete: Concrete may be dropped into the pier from the ground surface provided no more than three inches (76 mm) of water remains in the bottom and the concrete will free-fall vertically without obstruction. The concrete shall be placed in a rapid, continuous operation and controlled such that the concrete does not segregate.

1815.5.1 No piers shall be installed near a concreted pier until the concrete has set sufficiently to avoid damage to the concreted pier.

1815.5.2 For piers without enlarged bases, concrete or grout may be placed through still water or slurry. A properly operated tremie or pumping method shall be used. Samples of the slurry shall be tested to determine the properties prior to placing concrete in each pier. The quality, consistency, and density of the slurry shall be controlled to ensure that there will be free-flow of concrete from the tremie pipe. The concrete must be placed such that all water, slurry and contaminated concrete below design cutoff level is displaced.

1815.5.3 For piers with enlarged bases, the concrete may be placed under slurry, based upon the recommendations of a *registered design professional* and with the approval of the code official. The specific soil or rock conditions, equipment and procedures used shall be taken into account.

1815.5.4 A suitable method shall be employed to verify that the entire length of the shaft is completely filled with concrete. Such means shall include the ability to determine the incremental volumes of concrete installed in relation to calculated shaft volume.

1815.6 Design stresses: Foundation piers may be designed as concrete columns with continuous lateral support below the soil level. The unit compressive stress in the concrete shall not exceed 33% of the 28 day strength of the concrete or 1,600 psi, whichever is less. The unit compressive stress in the steel reinforcement or the permanent steel casing shall not exceed 40% of the yield strength of the steel or 24,000 psi, whichever is less. Permanent steel casing which is used as structural reinforcement shall be protected against corrosion in accordance with 780 CMR 1816.4.1.

32/48

G7 OCT 30/01

1815.7 Alignment: When the center of the cross section of a foundation pier at any level deviates from the resultant of all forces more than 1/50 of its height, or more than 1/10 of its diameter, it shall be reinforced as provided in ACI 336. The restraining effect of the surrounding soil may be taken into account.

1815.8 Allowable bearing pressure: The allowable bearing pressure on the bottom of the pier shall be in accordance with 780 CMR 1804.3 Additional load may be carried by using higher bearing pressures than allowed by 780 CMR 1804.3 and/or by friction on the sides of the pier embedded in suitable bearing material based on recommendations by a *registered design professional* and subject to the approval of the code official. Such recommendations shall be based on the results of load tests or other suitable tests or analyses carried out to measure side friction and/or end bearing of piers installed in the same bearing stratum.

1815.9 Minimum spacing: The minimum center-to-center spacing between adjacent piers designed for friction support shall be not less than two times the shaft diameter.

1815.10 Special provisions: For piers with shaft diameter less than 24 inches (610 mm), the following special provisions shall apply:

1815.10.1 For piers with temporary casing extending to the bottom, the concrete may be poured from the top in accordance with 780 CMR 1815.5.

1815.10.2: For all other cases, piers shall be filled from the bottom upward through a tremie or concrete pump tube in accordance with 780 CMR 1815.5.2

1815.11 Records: The owner shall engage a *registered design professional* to monitor the installation of the piers. The design professional or his representative, qualified by training and experience, shall be present at all times while foundation piers are being installed, to observe and test the bearing material in place, to verify the pier dimensions and to observe concrete placement. When direct inspection of the bearing surface is impossible, a suitable method shall be employed to verify the condition of the bearing material and to make the measurements and tests. Records of all observations, tests and dimensions shall be signed by the *registered design professional* and a copy shall be filed in the office of the code official.

780 CMR 1816.0 PILE FOUNDATIONS

1816.1 Investigation: Pile foundations shall be designed and installed on the basis of a foundation investigation and report conducted in accordance with 780 CMR 1802.0. The investigation shall include borings, test pits or other subsurface explorations at locations and depths sufficient to determine the position, thickness and adequacy of the loadbearing soils and demonstrate that there are no compressible soil deposits below the bearing stratum which would adversely affect the structure, *except* where sufficient data upon which to base the design and installation are available from other sources. In addition, the building site shall be investigated for all conditions which might promote deterioration of pile foundations, in order to satisfy the requirements of 780 CMR 1816.4. The investigation and report shall include, but not be limited to, the following:

1. Recommended pile types and installed capacities;
2. Driving criteria;
3. Installation and field inspection procedures;
4. Pile load test requirements;
5. Durability of pile materials; and
6. Designation of loadbearing stratum or strata.

1816.2 Special piles: Types of piles not specifically covered by the provisions of 780 CMR 1816.0 may be permitted, subject to the approval of the code official, upon the submission of acceptable test data and design and construction information prepared by a *registered design professional* stating that the pile installation is adequate to fulfill the design requirements.

1816.3 Seismic Design

1816.3.1 Seismic reinforcement: Piles shall have minimum longitudinal reinforcement and confining reinforcement in accordance with the provisions for specific pile types set forth in 780 CMR 1818.0 through 780 CMR 1824.0.

Where a minimum length for reinforcement or the extent of closely spaced confinement reinforcement is specified at the top of the pile, provisions shall be made so that those specified lengths or extents are maintained after pile cutoff.

Where seismic reinforcement at the top of the pile is required, alternative measures for laterally confining concrete and maintaining toughness and ductile-like behavior at the top of the pile shall be permitted provided consideration is given to forcing the hinge to occur in the confined region.

1816.3.2 Pile bending seismic design: Piling for buildings assigned to *Seismic Performance Category D*, in accordance with 780 CMR 1612.2.7, shall be designed for the maximum imposed curvatures resulting from seismic forces on free-standing piles where the piles are located in loose granular soils or in soil-profile type S3 or S4, in accordance with 780 CMR 1612.4.1. The piles shall be designed and detailed in accordance with the special moment frame requirements of 780 CMR 1903.3.3 or 780 CMR 2203.2 for a length equal to 120% of the flexural length. The flexural length shall be the distance from the point of fixity to the pile cap.

33/48

G) Oct 30/01

1816.3.3 Pile cap seismic connection: Piles shall be connected to the pile caps in accordance with the provisions for specific pile types set forth in 780 CMR 1818.0 through 780 CMR 1824.0.

1816.3.4 Pile foundation seismic ties: Piles or pile caps shall be interconnected by ties capable of resisting, in tension or compression, a force equal to 10% of the larger column dead plus live load. Individual tie beams are not required when it is demonstrated that equivalent restraint will be provided by structural members within slabs on grade or reinforced concrete slabs on grade or confinement by competent rock, cohesive soils, dense granular soils or other approved means.

1816.4 Protection of pile materials: Where boring records, previous experience, or site conditions indicate possible deleterious action on pile materials because of soil constituents, changing water levels or other factors, the pile materials shall be adequately protected by approved materials, methods or processes. Protective materials shall be applied to the piles so as not to be rendered ineffective by driving.

1816.4.1 Steel and steel-concrete piles: At locations where steel and steel-concrete piles will be in contact with any material which is corrosive to the steel, one of the following procedures shall be used for protection, or any other method which will satisfy the requirements of the code official:

1. Remove all objectionable material.
2. Effectively protect the steel surface from pile cutoff grade to a grade 15 feet (4.6 m) below the bottom of the objectionable material by means of:
   a. cathodic protection as approved by the code official;
   b. an approved encasement of not less than three inches (76 mm) of dense concrete;
   c. an effective protective coating subject to the approval of the code official; or
   d. providing an excess steel thickness of ⅛ inch (3.2 mm) beyond design requirements on all exposed steel surfaces.

1816.4.2 Timber piles: The preservative treatment of timber piles shall comply with the provisions of 780 CMR 1822.2.

1816.5 Lateral support: Any soil shall be deemed to afford sufficient lateral support to permit the design of any type of pile as a short column. When piles are driven through soil which will be removed subsequent to the completion of the foundation, the resistance offered by such material shall not be considered to contribute to the lateral supporting capacity.

1816.5.1 Column action: The portion of a pile that is not laterally supported shall be designed as a column in accordance with 780 CMR 19 taking into consideration the conditions of end fixity.

1816.6 Group action: In cohesive soils, the compressive load capacity of a group of friction piles shall be analyzed by a generally accepted engineering method, and, where such analysis indicates, the individual allowable pile load shall be reduced accordingly.

1816.7 Stability:

1816.7.1 Wall foundations: All piles in wall foundations shall be staggered about the center of gravity of the wall load at a minimum distance of ½ the pile top diameter therefrom. A foundation wall restrained laterally so as to ensure stability both during and after construction may be supported by a single row of piles.

1816.7.2 Columns: Individual columns supported on piles shall be designed for eccentricity between the column and the centroid of the supporting piles equal to a minimum of three inches (76 mm) or the actual eccentricity, whichever is greater. The design shall account for such eccentricity through one of the following methods:

a. By supporting the column on a minimum of three piles in a triangular pattern.
b. By designing walls, grade beams or structural floors to resist the bending moment induced by the eccentricity.
c. By designing the piles, column or both to resist the bending moment induced by the eccentricity and providing adequate lateral restraint at the top of the piles to resist the lateral thrust due to the bending moment.

1816.8 Structural integrity: Piles shall be installed in such a manner and sequence as to prevent distortion or damage to piles being installed or already in place, to the extent that such distortion or damage affects the structural integrity of the piles.

When piles have been damaged in driving, or have been driven in locations and alignment other than those indicated on the plans, or have capacities less than required by the design, the affected pile groups and pile caps shall be investigated, and if necessary, the pile groups or pile caps shall be redesigned or additional piles shall be driven to replace the defective piles.

1816.9 Spacing: The minimum center-to-center spacing of piles shall be not less than twice the average diameter of a round pile, nor less than 1¾ times the diagonal dimension of a rectangular pile. When driven to or penetrating into rock, the spacing shall be not less than 24 inches (610 mm). When receiving principal support from end-bearing on materials other than rock or through frictional resistance, the spacing shall be not less than 30 inches (762 mm) or as provided in 780 CMR 1820.4.6 for Pressure Injected Footings.

1816.10 Splices: Splices shall be avoided insomuch as practicable. When used, slices shall be constructed so as to provide and maintain true

G) Oct 30/01

alignment and position of the component parts of the pile during installation and subsequent thereto, and shall be of adequate strength to transmit the vertical and *lateral loads* and moments occurring at the location of the splice during driving and under service loading. Splices shall develop not less than 50% of the capacity of the pile in bending. Additionally, all pile splices occurring in the upper ten feet (3 m) of the embedded portion of the pile shall be capable of resisting at allowable working stresses the moment and shear that results from an assumed eccentricity of the pile load of three inches (76 mm); or the pile shall be braced in accordance with 780 CMR 1816.7 to other piles that do not have splices in the upper ten feet (3 m) of embedment.

1816.11 Pile caps: Pile caps shall be of reinforced concrete. The soil immediately below the pile cap shall not be considered as carrying any vertical load. The tops of all piles shall be embedded not less than three inches (76 mm) into pile caps, and the caps shall extend at least four inches (102 mm) beyond the edges of all piles. The tops of all piles shall be cut back to sound material before capping.

1816.12 Pre-excavation: Jetting, augering and other methods of pre-excavation must be approved by the code official and carried out in the same manner as used for piles subject to load test and in a manner which will not impair the carrying capacity of the piles already in place or the safety of existing adjacent structures. Pre-excavation shall be of the same method as carried out on piles subject to load tests. Immediately after completion of jetting or augering, the pile shall be advanced to the maximum depth of pre-excavation and driven below this depth to the required load resistance. Where load tests are required, pre-excavation of test piles will be of the same manner as proposed for production piles.

1816.13 Inspection: The owner shall engage a *registered design professional* who shall submit his qualifications in writing to the code official. This design professional, or his representative, who must be qualified by experience and training, shall be present at all times while piles are being driven to observe all work in connection with the piles. The design professional or his representative shall make an accurate record of the material and the principal dimensions of each pile, of the weight and fall of the ram, the type, size and make of hammer, cushion blocks, the number of blows per minute, the energy per blow, the number of blows per inch for the last six inches (150 mm) of driving, together with the grades at point and cutoff and any other pertinent details. A copy of these records shall be signed by the *registered design professional*, and filed in the office of the code official.

1816.14 Identification: All pile materials shall be identified for conformity to the specified grade with this identification maintained continuously from the point of manufacture to the point of installation or shall be tested by an *approved agency* to determine conformity to the specified grade and the *approved agency* shall furnish an affidavit of compliance to the code official.

1816.15 Pile location plan: A plan showing the location and designation of all piles by an identification system shall be filed with the code official prior to installation of such piles. All detailed records for individual piles shall bear an identification corresponding to that shown on the plan.

1816.16 Use of existing piles: Piles that have previously supported a partially or fully demolished structure shall not be used for support of new construction unless satisfactory evidence is submitted to the code official which indicates that the piles have not been adversely impacted by the demolition, are sound, have adequate capacity to support the new design loads, and meet all of the requirements of 780 CMR. The capacities of such piles shall be determined by analyses, load testing or redriving. The design load applied to such piles shall not exceed the greater of the following values:

a. actual sustained load determined to have been previously supported satisfactorily by the piles, up to a maximum of 120 tons

b. the documented, as-built design capacity of the piles, as confirmed by prior load testing

c. design capacity determined by analyses and confirmed by new load testing or by redriving per 780 CMR 1817.3.1 on one or more piles representative of each configuration (s) of pile and subsurface conditions.

1816.17 Pile driveability: Pile cross sections shall be of sufficient size and strength to withstand handling and driving stresses without damage to the pile and to provide sufficient stiffness to transmit the required driving forces. Driven piles of uniform cross section or tapered piles shall have a minimum nominal diameter of eight inches (200 mm) except as provided in 780 CMR 1820.6.4 for small diameter grouted piles, 780 CMR 1822.3.3 for timber piles and 780 CMR 1821.1 for precast concrete piles. Tapered shoes or points of lesser dimensions may be attached to the pile unit.

1816.18 Pile heave: Adequate provision shall be made to observe pile heave. Accurate reference points shall be established on each pile immediately after installation; for cast-in-place piles with unfilled corrugated shells, the reference point shall be at the bottom of the pile. If, following the installation of other piles in the vicinity, heaving of ½ inch (13 mm) or more occurs, the heaved piles shall be re-driven to develop the required capacity and penetration, or the capacity of the pile may be verified by load tests in accordance with 780 CMR 1817.4.

35/48

G7 OCT 30/01

1816.19 Settlement analysis: The settlement of individual piles or groups of piles shall be estimated based upon approved methods of analysis and in accordance with 780 CMR 1805.2.2. The predicted settlement shall neither cause harmful distortion of or instability in the structure, nor cause any stresses to exceed allowable values.

1816.20 Use of vibratory drivers: Vibratory drivers shall only be used to install piles where the pile load capacity is verified by load tests in accordance with 780 CMR 1817.4. The installation of production piles shall be controlled according to power consumption, rate of penetration or other approved means that assure pile capacities equal to or exceeding those of the test piles.

1816.21 Installation sequence: Piles shall be installed in such sequence as to avoid compacting the surrounding soil to the extent that other piles cannot be installed properly, and to prevent ground movements that could damage adjacent structures.

780 CMR 1817.0 ALLOWABLE PILE LOADS

1817.1 General: The allowable load on piles shall be determined by the applicable formulas complying with accepted engineering practice or load tests as stated herein. The maximum load capacity shall be limited by the supporting capacity as obtained from bearing upon or embedment in bearing materials as defined in 780 CMR 1804.0 and 1805.0, but the load shall not exceed the capacity of the pile designed in accordance with the provisions of 780 CMR 1817.0 and the Code provisions for the construction materials involved.

The allowable load on a pile shall not be limited to load obtained by multiplying its point area by the allowable bearing pressure given in 780 CMR 1804.3.

1817.2 Piles in subsiding areas: Where piles are driven through subsiding fills or other subsiding strata and derive support from underlying firmer materials, the downward friction forces which are imposed on the piles by the subsiding upper strata shall be included in the design.

1817.3 Determination of allowable load: In the absence of pile load tests performed in accordance with 780 CMR 1817.4, the load on a single pile, except for the pile types covered in 780 CMR 1820.2 (augered uncased piles), 780 CMR 1820.4 (pressure injected footings) and 780 CMR 1824.0 (steel-core caissons), shall not exceed the higher of the two values determined in accordance with 780 CMR 1817.3.1 (driving formula) or 780 CMR 1817.3.2 (*friction formula in clay*). *Loads on jacked piles* shall be determined in accordance with 1817.3.3.

1817.3.1 Driving formula:

1. Where the design load capacity of the pile does not exceed 50 tons, the allowable load may be computed by means of the following driving formula:

$$R = \frac{2E}{S + C}$$

where--

R = allowable pile load in pounds;
E = energy per blow in foot-pounds;
S = penetration of last blow or average penetration of last few blows expressed in inches; and
C = constant equal to 1.0 for drop hammer and 0.1 for steam or air hammer.

2. When the design load capacity of a pile exceeds 50 tons, the required driving resistance shall be increased above that required by the driving formula in 780 CMR 1817.3.1 based on load tests or past experience under similar conditions.
3. The value of S must be determined with the hammer operating at 100% of the rated number of blows per minute for which the hammer is designed.
4. Any driving resistance developed in strata overlying the bearing material shall be discounted.
5. If the driving of the pile has been interrupted for more than one hour, the value of S shall not be determined until the pile is driven at least an additional 12 inches (305 mm), except when it encounters refusal on or is in a material of Classes 1 through 6.
6. When any pile is driven through a layer of gravel, sand or hard clay exceeding five feet in thickness, and through an underlying soft stratum to reach the bearing stratum, the bearing capacity shall not be determined in accordance with the driving formula, unless jetting is used during the entire driving of the pile through the layer of gravel, sand or hard clay or unless a hole is pre-excavated through said layer for each pile.

1817.3.2 Friction formula in clay: Where the design load does not exceed 22 tons, the allowable load on a pile stopped in soil of Material Class 10 (Table 1804.3) of medium to hard consistency may be based on a friction value of 500 psf of embedded pile surface. Higher design loads or other friction values shall be determined by pile load tests in accordance with 780 CMR 1817.4 or 1817.7.

The embedded length shall be the length of the pile below the surface of the Class 10 soil or below the surface of immediately overlying satisfactory bearing material. The area of embedded pile surface shall be computed by multiplying the embedded length by the perimeter of the smallest circle or polygon that can be

36/48
GJ Oct 30/01

circumscribed around the average section of the embedded length of the pile. The method of determining the allowable load described in 780 CMR 1817.3.2 shall not be used for a pile in which the drive pipe is withdrawn or for piles which are driven through the clay to or into firmer bearing materials.

In case these piles are in clusters, the allowable load shall be computed for the smaller of the following two areas: the sum of the embedded pile surfaces of individual piles; or the area obtained by multiplying the perimeter of the polygon circumscribing the cluster at the surface of the satisfactory bearing material by the average embedded length of the piles.

1817.3.3 Jacked piles:

1. Not less than 10% of jacked piles shall be load-tested to twice the design load (load test piles). All other jacked piles shall be founded in the same bearing stratum as the load test piles and shall be proof-loaded to 125% of design load (production piles).
2. For production piles, the 125% of design load shall be maintained for at least 30 minutes. Acceptability criteria: during final 15 minutes of load, the rate is not progressive (plot is linear or decreasing when settlement is plotted against logarithm of time); and the rate of settlement is equal to or less than that observed for load test piles during the corresponding time period under 125% of design load.
3. Settlement readings shall be plotted after one, two, four, eight, and 15 minutes, and at 15-minute intervals thereafter. Load shall be maintained on production piles until acceptability criteria are met.
4. For load test piles, the load shall be applied directly to 125% of design load and maintained for not less than 30 minutes, and until the settlement rate is not progressive (as defined above). Load shall then be increased to twice the design load and maintained constant for not less than four hours. Settlement during the four hour period shall not exceed 0.050 inches (1.3 mm).

In the event that settlement exceeds 0.050 inches (1.3 mm) in four hours, the pile shall be deemed unacceptable for ½ of the final load. The allowable load on the rejected pile may be established by performing an additional load test at the lesser design load. The design load shall not exceed ½ the load maintained for a four hour period during which time settlement did not exceed 0.050 inches (1.3 mm).

1817.4 Compression load test: Where the design load for any pile is in doubt or where the proposed design load for any pile, including pressure injected footings, exceeds 50 tons or exceeds the value determined in accordance with 780 CMR 1817.3.2 (friction formula in clay), one or more pile load tests shall be performed on representative piles in accordance with 780 CMR 1817.0.

The results of the load test can be applied to other piles within the area of substantially similar subsoil conditions as that for the test pile, providing the performance of the test pile has been satisfactory and the remaining piles are of the same type, shape and size as the test pile and are installed using the same methods and equipment and are driven into the same bearing strata as the load-tested pile to an equal or greater penetration resistance.

For design loads between 50 and 120 tons, pile load tests may be waived by the code official, where justified, upon submittal of substantiating data prepared by a *registered design professional* which include experience and/or performance records for the proposed pile installation under similar soil and loading conditions.

1817.4.1 Required test load: A single pile shall be load-tested to not less than twice the allowable design load. When two or more piles are to be tested as a group, the total load shall be not less than 1½ times the allowable design load for the group.

In no case should the load reaching the top of the bearing stratum under maximum test load for a single pile or pile group be less than the following:

Case A-piles designed as end-bearing piles: 100% of the allowable design load.

Case B-piles designed as friction piles: 150% of the allowable design load.

For piles designed as combination end-bearing and friction piles, Case A applies if the pile is designed to support more than 50% of its design in bearing; otherwise, Case B applies.

1817.4.2 Internal instrumentation: The test pile shall be instrumented in accordance with the requirements in paragraph 4.4.1 of ASTM D1143 listed in *Appendix A* (hereinafter ASTM D1143) to enable measurement or computation of the load in the pile where it enters the bearing stratum. For piles containing concrete, instrumentation shall be installed in the test pile to permit direct measurement of the elastic modulus of the pile.

This requirement is waived for the following cases:

1. The test pile is installed within a casing that extends to within ten feet above the bearing stratum.
2. The pile to be tested has been functioning satisfactorily under load for a period of one year or more.
3. The pile is 30 feet long or less and no appreciable load will be supported above the bearing stratum.

1817.4.3 Loading procedure: Pile load tests shall be conducted in accordance with ASTM D1143,

37|4B

GJ OCT 30/01

Standard Method of Testing Piles Under Static Axial Compressive Load, except that Section 5, Loading Procedures, shall be deleted and replaced by the following provisions:

1. Apply 25% of the allowable design load every ½ hour. Longer time increments may be used, but each time increment should be the same. In no case shall a load be changed in the rate of settlement is not decreasing with time.
2. At 200% of the allowable design load (or 150% for pile groups), maintain the load for a minimum of one hour and until the settlement (measured at the lowest point on the pile at which measurements are made) over a one-hour period is not greater than 0.01 in.
3. Remove 50% of the design load every 15 minutes until zero load is reached. Longer time increments may be used, but each should be the same.
4. Measure rebound at zero load for a minimum of one hour.
5. For each load increment or decrement, take readings at the top of the pile and on the internal instrumentation at one, two, four, eight and 15 minutes and at 15-minute intervals thereafter.

A load greater than 200% of the allowable design load (or 150% of the allowable design load for pile groups) may be applied at the top of the pile, using the above loading procedure, to ensure that 780 CMR 1817.4.1 is fulfilled. Other optional methods listed in ASTM D1143 may be approved by the code official upon submittal in advance of satisfactory justification prepared by a *registered design professional* who is qualified in this field.

1817.4.4 Selection of design load: Provided that the allowable design load does not exceed the load allowed in 780 CMR 1817.0 for the type of pile and provided that the allowable design load does not exceed 100% of the load supported in the bearing stratum (or ⅔ of the load supported in the bearing stratum for friction piles or pile groups) when the maximum test load is applied, then the allowable design load shall be the greater of the following:

1. Allowable design load based on settlement during loading: 50% of the applied test load which causes a gross settlement at the pile cutoff grade equal to the sum of: a) the theoretical elastic compression of the pile in inches assuming all the load on the butt is transmitted to the tip, plus b) 0.15 inch (3.8 mm), plus c) 1% of the pile tip diameter or pile width in inches. If the settlements are so small that the load-settlement curve does not intersect the failure criterion, the allowable design load shall be 50% of the maximum test load.
2. Allowable design load based on the net settlement after rebound: 50% of the applied test load which results in a net settlement at the top of the pile of ½ inch (13 mm) after rebound for a minimum of one hour at zero load.

1817.5 Use of higher allowable stresses: Higher stresses than those permitted in 780 CMR 1817 for various pile materials may be approved by the code official based upon the submission of substantiating data and analyses which justify such higher stresses. The data shall be presented in a report prepared by a *registered design professional* experienced in geotechnical aspects of foundation design and shall include, as applicable: the results of the soil investigation, dynamic analyses of the pile behavior, pile load tests, analyses of load transfer during testing and prediction of pile performance during long term service.

1817.6 Lateral load tests: The allowable load on piles subject to *lateral load* shall be verified by test unless it is waived by the code official. Pile load tests may be waived by the code official, where justified, upon submittal of substantiating data which include experience and/or performance records for pile installations under similar soil and loading conditions prepared by a *registered design professional* experienced in geotechnical aspects of foundation design.

1817.6.1 Required test load: A single pile shall be load tested to not less than 200% of the design *lateral load*.

1817.6.2 Test setup and loading procedure: The load test setup instrumentation and loading procedure shall be in accordance with ASTM D3966 listed in *Appendix A*.

1817.6.3 Selection of design load: The design load shall be selected by the responsible *registered design professional*, based upon interpretation of the load-deflection data from the load test.

1817.7 Tension load tests: The allowable load on piles in tension shall be verified by test unless it is waived by the code official. Pile load test may be waived by the code official, where justified, upon submittal of substantiating data which includes experience and/or performance records for pile installations under similar soil and loading conditions prepared by a *registered design professional* experienced in the geotechnical aspects of foundation design.

1817.7.1 Required load test: A single pile or a pile group shall be load tested to not less than 200% of the design load for transient loads (i.e.: earthquake and wind) and 250% for sustained loads.

1817.7.2 Test setup and loading procedure: The load test setup, instrumentation and loading procedure shall be in accordance with ASTM D3689.

38/48

A7 oct 30/01

1817.7.3 Selection of design load: Provided the allowable design load does not exceed the allowable stresses in the pile materials, the allowable design load shall be the lower of the following:

1. 50% (for transient loads) or 40% (for sustained loads) of the applied test load which results in a net upward movement of ½ inch at the top of the pile after removal of the maximum test load (The gross upward movement minus the rebound movement).
2. 50% (for transient loads) or 40% (for sustained loads) of the applied test load which results in continuous upward movement with no increase in load.

1817.8 Bearing capacity: Individual piles and groups of piles shall develop ultimate load capacities of at least twice the design working loads in the designated bearing layers. Where weaker materials underlie the load bearing material into which the piles are driven, the allowable pile load shall be limited by the provision that the vertical pressures in such underlying materials produced by the loads on all piles in a foundation shall not exceed the allowable bearing pressures of such materials as provided in Table 1804.3 or as established by analysis, applying accepted principles of soil mechanics. Piles or pile groups shall be assumed to transfer their loads to the underlying materials by spreading the load uniformly at an angle of 60° with the horizontal, starting at a polygon circumscribing the piles at the top of the satisfactory bearing material in which they are embedded; but the area considered as supporting the load shall not extend beyond the intersection of the 60° planes of adjacent piles or pile groups.

1817.9 Bent piles: The load bearing capacity of piles discovered to have a sharp or sweeping bend shall be determined by an approved method of analysis or by load testing a representative pile.

1817.10 Overloads on piles: The maximum compressive load on any pile due to mislocation shall not exceed 110% of the allowable design load.

780 CMR 1818.0 STRUCTURAL STEEL PILES

1818.1 Materials: Structural steel piles and fully welded steel piles fabricated from plates shall conform to ASTM A36, A252, A283, A572 or A588 listed in *Appendix A*.

1818.2 Allowable stress: The allowable design compressive stress shall not exceed 35% of the minimum specified yield strength of the steel nor 12,600 psi. The maximum allowable design stress shall be limited to 50% of the minimum specified yield strength of the steel where higher stresses are substantiated by 780 CMR 1817.5.

1818.3 Pile cap seismic connection: All structural steel piles shall be connected to the pile cap with a connection detail designed for a minimum tensile force equal to 10% of the pile compression design *load.*

1818.4 Dimensions of H-piles: Sections of H-piles shall comply with the criteria of 780 CMR 1818.4.1 through 1818.4.4.

1818.4.1 Flanges: The flange projections shall not exceed 14 times the minimum thickness of metal in either the flange or the web, and the flange widths shall not be less than 80% of the depth of the section.

1818.4.2 Depth: The nominal depth in the direction of the web shall not be less than eight inches.

1818.4.3 Thickness: Flanges and webs shall have a minimum nominal thickness of ⅜ inch (9.5 mm).

1818.4.4 Tip reinforcement: The tips of all steel H piles having a thickness of metal less than 5/10 inches (12.7 mm) which are driven to end bearing on rock of Classes 1 through 3 by an impact hammer shall be reinforced. The installation of all steel H piles by impact hammer to end bearing on rock of Classes 1 through 3 shall be conducted so as to terminate driving when the pile reaches refusal on the rock surface.

780 CMR 1819.0 CONCRETE-FILLED STEEL PIPE AND TUBE PILES

1819.1 Material: Steel pipe and tube piles shall conform to ASTM A252 or A283 listed in Appendix A. Concrete shall conform to 780 CMR 1820.1.1.

1819.2 Allowable stress:

1819.2.1 Top driven piles: The allowable design compressive stress in the concrete shall not exceed 25% of the 28-day compressive strength of the concrete or 1,100 pounds per square inch whichever is smaller. The maximum allowable compressive stress in the steel shall not exceed 9,000psi.

1819.2.2 Mandrel driven piles: For piles installed with mandrels which transmit driving stresses to the bottom of the steel pipe, the allowable design compressive stress in the concrete shall not exceed 33% of the 28-day specified compressive strength. The allowable design compressive stress in the steel shall not exceed 35% of the minimum specified yield strength of the steel. The maximum allowable design stress shall be limited to 50% of the minimum specified yield strength of the steel where higher stresses are substantiated by 780 CMR 1817.

39/48

G) OCT 30/01

1819.3 Reinforcement: Except for steel dowels embedded five feet (1.5m) or less in the pile and as provided for in 780 CMR 1802.2 and 1802.6, reinforcement, where required, shall be assembled and tied together and shall be placed in the pile as a unit before the reinforced portion of the pile is filled with concrete.

1819.3.1 Seismic reinforcement: All pipe piles shall have over their full length a minimum area of steel, after allowance for corrosion, of 0.25 percent of the pile cross-sectional area for buildings assigned to *Seismic Performance Category C,* and a minimum area of steel of 0.50 percent for buildings assigned to *Seismic Performance Category D,* in accordance with 780 CMR 1612.2.7.

1819.3.2 Pile cap seismic connection: All concrete-filled steel pipe and tube piles shall be connected to the pile cap by providing longitudinal reinforcement at the top of the pile equal to 1 % of the pile cross-sectional area. The reinforcement shall extend into the pile for a length equal to two times the required embedment anchorage into the pile cap. The embedment in the pile cap shall equal the development length as specified in ACI 318 as listed in Appendix A. The development length to be provided in the cap is the full development length for compression without reduction in length for excess area. Field-placed dowels anchored in the concrete are acceptable.

G7 oct 30/01

NON-TEXT PAGE

41|48

G7 OCT 30/01

1819.4 Minimum dimensions: Piles shall have a nominal outside diameter of not less than eight inches (203 mm) and a minimum wall thickness of 1/10 inch (2.5 mm), except that for piles driven open ended, the nominal outside diameter shall not be less than ten inches (254 mm) and the wall thickness not less than ¼ inch (6.4 mm) for diameters less than 14 inches (356 mm) and ⅜ inch (9.5 mm) for diameters greater than 14 inches. Pipe of lesser wall thickness may be used if a suitable cast steel cutting shoe is provided.

1819.5 Placing concrete: The placement of concrete shall conform to 780 CMR 1820.1.3 and 1820.5.

780 CMR 1820.0 CAST-IN-PLACE CONCRETE PILES

1820.1 General: 780 CMR 1820.0 includes augered uncased piles, pressure injected footings (enlarged base piles), cased poured piles, and small diameter grouted piles. Unless otherwise noted, the materials, reinforcing and installation shall conform to 780 CMR 1820.1.1 through 1820.1.3.

1820.1.1 Material: All concrete shall have a 28-day specified compressive strength (f'_c) of not less than 3,000 psi (2.11 kg/mm^2). The maximum size of coarse aggregate for all concrete shall be ¾ inch (19 mm), and the concrete shall have a slump of four to seven inches (102 mm to 178 mm). If concrete is to be pumped, the mix design including slump shall be adjusted to produce a pumpable concrete.

1820.1.2 Reinforcement: Except for steel dowels embedded five feet (1.5 m) or less in the pile and as provided for in 780 CMR 1820.2 and 1820.6, reinforcement, where required, shall be assembled and tied together and shall be placed in the pile as a unit before the reinforced portion of the pile is filled with concrete.

1820.1.2.1 Seismic reinforcement: All cast-in-place concrete piles shall have minimum reinforcement of 0.25% of the pile cross-sectional area for buildings assigned to *Seismic Performance Category C*, and a minimum reinforcement of 0.50% for buildings assigned to *Seismic Performance Category D* in accordance with 780 CMR 1612.2.7. The reinforcing shall be placed in the top ⅓ of the pile length or extend ten feet (3 m) from the top of the pile, whichever is the longer length.

For *Seismic Performance Category C* buildings, the pile reinforcing shall be a minimum of four longitudinal bars with closed ties, or equivalent spirals, having a minimum diameter of ¼ inch. The ties shall be provided at a maximum spacing of 16 times the longitudinal reinforcing bar diameter. The maximum tie spacing in the top two feet (610 mm) of the pile length shall be four inches (102 mm). Tie detailing shall be in accordance with 780 CMR 1903.4

For *Seismic Performance Category D* buildings, the pile reinforcing shall be minimum of four longitudinal bars with closed ties, or equivalent spirals, having a minimum diameter of ⅜ inch, for piles with a diameter of 20 inches (205 mm) or less; and a minimum tie diameter of ½ inch, for piles with a diameter more than 20 inches (508 mm). The ties shall be provided at a minimum spacing of eight times the longitudinal reinforcing bar diameter. The maximum tie spacing in the top four feet (1.2 m) of the pile length shall be three inches (76 mm)

Exception: Pile ties or spirals are not required where permanent metal casing (steel pipe, steel tube or spiral-welded steel shell) is used, provided the casing has minimum thickness as follows: for *Seismic Performance Category C* buildings, 0.058 inch (1.5 mm), and for *Seismic Performance Category D* buildings, 0.070 inch (1.8mm). The steel casing must be adequately protected from corrosion due to soil, changing water levels or other subgrade conditions indicated by the site soil investigation.

1820.1.2.2 Pile cap seismic connection: All cast-in-place concrete piles shall be connected to the pile cap by extending the pile reinforcing into the pile cap for a distance equal to the development length as specified in ACI 318 listed in Appendix A. The development length to be provided in the cap is the full development length for compression without reduction in length for excess area. Field-placed dowels anchored at least twice the required cap development length are acceptable.

1820.1.3 Installation: For all cased piles, the inside of the pipe or casing shall be thoroughly cleaned to the bottom and visually inspected prior to filling with concrete. The piles shall be poured in such a manner as to exclude all foreign matter and to assure a well-formed unit of full cross-section. The concreting shall be subject to the following limitations.

1. The diameter shall not vary more than 20% from the specified value.
2. Concrete shall not be placed through water except where tremie methods are approved.
3. When depositing concrete from the top of the pile, the concrete flow shall be rapid and continuous, and centered at the top of the pile.

4. After filling with concrete, the top ten feet (3 m) shall be thoroughly rodded.
5. No pile shall be installed within a distance of nine feet (2.7 m) from a pile which has been filled with concrete for less than 12 hours, unless approved.

1820.2 Augered uncased piles:

1820.2.1 Definition: An augered uncased pile is defined as a structural member installed utilizing a hollow-stem auger no less than 12 inches (305 mm) in outside diameter which extends to satisfactory bearing materials to develop support by end bearing and/or friction in those materials.

1820.2.2 Pile diameter: The design pile diameter shall be taken as the outside diameter of the hollow stem auger.

1820.2.3 Allowable design stresses: Except as provided in 780 CMR 1817.5, the design stresses shall not exceed the following values:

1. For compression loads: The maximum allowable design stress on the cement grout or concrete shall be 33% of the specified 28- day unconfined compressive strength, but not exceeding 1,600 psi. The maximum allowable design stress on the steel reinforcing, including permanent steel casing, shall be 40% of the minimum specified yield strength, but not exceeding 24,000 psi.
2. For tension loads: The maximum allowable design tensile stress on the steel reinforcing shall be 60% of the minimum specified yield strength. The allowable design tensile stress on the cement grout shall be zero.

1820.2.4 Reinforcement: Reinforcement shall be as required in 780 CMR 1820.1., except reinforcement may be placed after withdrawal of the auger where approved by the code official.

1820.2.4.1 Concrete cover: The minimum concrete cover shall be 2½ inches (64 mm) for uncased shafts and one inch (25 mm) for cased shafts.

1820.2.4.2 Corrosion protection: Corrosion protection shall be as detailed in 780 CMR 1820.6.6.

1820.2.5 Minimum spacing: The minimum center-to-center spacing between adjacent piles shall not be less than 30 inches (760 mm) or two times the pile diameter, whichever is greater. In addition, for groups of friction piles, the overall circumference of a pile group shall exceed the sum of the circumferences of all of the individual piles within the group.

1820.2.6 Installation: Augered uncased piles shall be formed by advancing a closed-end continuous-flight hollow-stem auger of uniform diameter through unsuitable material and into a satisfactory bearing material followed by removal of the tip closure and pumping cement grout or concrete through the hollow-stem while the hollow-stem auger is extracted. During advancement, the hollow-stem auger shall be rotated rapidly such that the material through which the auger is being advanced is removed by the auger flights and is not displaced laterally by the auger. During withdrawal, if the hollow stem auger is rotated, it shall be rotated in a positive (advancing) direction.

1. The grout or concrete shall be pumped under continuous pressure and in one continuous operation. Grout or concrete pump pressures shall be measured and maintained at all times sufficiently high to offset hydrostatic and lateral earth pressures. The rate of withdrawal of the auger shall be carefully controlled to exclude all foreign matter and ensure that the augered hole is completely filled with grout or concrete as the auger is withdrawn. The actual volume of grout or concrete pumped into each hole shall be equal to, or greater than , the theoretical volume of the augered hole.
2. If the grouting or concreting process of any pile is interrupted, or a loss of concreting pressure occurs, the pile shall be redrilled to its original depth plus six inches (152 mm) (unless bearing on rock) and filled from the bottom.
3. Augered uncased piles shall not be installed within six pile diameters (center-to-center) of a pile filled with grout or concrete less than 24-hours old except where approved by the code official.

1820.2.7 Records: The owner shall engage a *registered design professional* to monitor the installation of augered uncased piles in accordance with 780 CMR 1816.13. The design professional or his representative shall make an accurate record of the installation equipment used, pile dimensions, grout or concrete volumes, reinforcement, interruptions or delays in pile installation, and all other pertinent installation data.

1820.2.8 Instrumentation: The continuous-flight auger rig utilized to install augered uncased piles shall be equipped with data logging equipment that automatically monitors and produces a real-time printout of depth, grout or concrete pressure, grout or concrete flow, and rate of auger withdrawal. The automatic monitoring equipment shall immediately indicate to the equipment operator, and record on the printed record, any instance during the withdrawal of the hollow-stem auger where the rate of auger withdrawal times the theoretical pile cross-sectional area exceeds the rate of grout or concrete placement. A printed instrumentation readout for each pile shall be provided to the

design professional's representative upon completion of each pile.

1820.3 Driven uncased pile: No provisions.

1820.4 Pressure-injected footings: (Enlarged base piles)

1820.4.1 Materials: Concrete shall satisfy the provisions of 780 CMR 1820.1.1. Compacted concrete shall have a zero slump. Reinforcement shall be as provided in 780 CMR 1820.1.2.

1820.4.2 Allowable design stresses: The maximum allowable design stress on shaft concrete shall be 33% of the 28-day strength, but not exceeding 1,600 psi. The maximum allowable design stress on permanent steel casing, if at least 1/10-inch (2.5 mm) thick, and on steel reinforcing shall be 40% of the minimum specified yield strength, but not exceeding 24,000 psi.

1820.4.3 Installation: The installation of pressure-injected footings shall fulfill the following requirements:

1820.4.3.1 Base:

1. The enlarged base of a pressure-injected footing shall be formed on or in bearing materials of Classes 1 to 9 inclusive. The Class 9 material (fine sand) shall have a maximum of 15% by weight finer than the No. 200 mesh sieve and shall be non-plastic, unless satisfactory load test results or other substantiating data are submitted to, and approved by, the code official.
2. The compacted concrete placement shall be in measured batches, to establish impact energy required per unit volume of concrete. A minimum of one Standard Batch Volume of concrete, as defined in Table 1820.4, shall be injected in the base, after expulsion of the concrete plug or boot used to close the tube during the driving process.

1820.4.3.2 Shaft installation:

1820.4.3.2.1 Uncased compacted-concrete shaft:

1. Concrete shall be placed at zero slump, in small batches, and shall be compacted in place in a controlled manner as the drive-tube is withdrawn.
2. Pressure injected footings formed through soils of Classes 10 and 11, located less than nine feet or within the heave range from an uncased shaft, shall be pre-drilled through such soil.
3. An uncased compacted-concrete shaft shall not be formed through very soft to soft soils of Classes 10 and 11. The code official may waive this requirement based upon satisfactory evidence prepared by a *registered design professional* that the soil has sufficient strength for proper shaft construction.
4. A suitable method shall be employed by the contractor and the design professional to verify and record that the entire length of the shaft is completely filled with concrete. Such means shall include the ability to determine the incremental volume of concrete installed in relation to the calculated shaft volume.

1820.4.3.2.2 Uncased high-slump concrete shaft:

1. Concrete shall be placed at not less than eight-inch slump, except that slump as low as four inches may be allowed if adequate vibration is applied to the drive-tube during the entire withdrawal process. During withdrawal, the level of concrete within the tube shall have a positive differential head over external soil and water pressures at all times.
2. The shaft shall be provided with full-length reinforcing steel anchored in the enlarged base. At a minimum, provide a cage with four, full length, number five reinforcing bars evenly spaced near the shaft perimeter.
3. Pressure injected footings located less than nine feet (2.7 m) from a completed uncased high-slump shaft shall not be installed until at least 12 hours after shaft pour.
4. A suitable method shall be employed by the contractor and the design professional to verify and record that the entire length of the shaft is completely filled with concrete. Such means shall include the ability to determine the incremental volume of concrete installed in relation to the calculated shaft volume.

1820.4.3.2.3 Cased shaft:

1. The permanent metal casing shall be fastened to the enlarged base in such a manner that the two will not separate.
2. Concrete shall be placed in the same manner as for cased poured concrete piles. The requirements of 780 CMR 1820.1.3 shall apply.

1820.4.4 Loadbearing capacity:

1. Pile loadbearing capacity shall be verified by load tests as required in 780 CMR 1817.4.
2. For loads up to 120 tons, the allowable load may be computed by the following formula:

$$R = \frac{B \times E_V}{C}^{2/3}$$

Where:

R = allowable load in pounds;

44/48

G7 OCT 30/01

B =average number of blows required to inject one cubic foot of concrete, during injection of the last batch;
E =Energy per blow in foot-pounds;
C =constant; and
V =total volume of base concrete in cubic feet.

The values of R, E, and C shall conform to Table 1820.4 unless other values are determined by load test, in which case the latter values shall control. Use of Table 1820.4 is limited by the provisions of 780 CMR 1817.4.

The value of V shall include an allowance of one Standard Batch Volume of concrete, if concrete is used in the tube during the driving process, plus the additional volume of concrete injected during formation of the base.

3. During injection of the last batch of concrete in the base, the height of concrete within the drive tube shall not be more than ⅓ of the drive-tube inside diameter.

TABLE 1820.4

R (tons)	Energy, E (foot-pounds)	C	Standard Batch Volume (cubic feet)
over 100	140,000	18	5
51 to 100	100,000	14	5
25 to 50	60,000	30	2

1820.4.5 Loading: The load on pressure-injected footings shall be limited by the provisions of 780 CMR 1817.8 except that the circumscribing polygon shall start at the junction of the shaft and the enlarged base, and the bearing area shall be taken at planes six feet or more below the junction, or at the top of weaker material, whichever is higher.

1820.4.6 Spacing: The center-to-center spacing of pressure-injected footings with uncased shafts shall be not less than 2½ times the outside diameter of the drive tube and not less than 3½ feet. The center-to-center spacing of pressure-injected footings with cased shafts shall be not less than three times the shaft diameter.

1820.5 Cased poured concrete piles: Steel-cased piles shall comply with the requirements of 780 CMR 1820.5.1 through 1820.5.4.

1820.5.1 Materials: Concrete shall satisfy the provisions of 780 CMR 1820.1.1. Pile shells or casings shall be of steel and shall be sufficiently strong to resist collapse and sufficiently water tight to exclude any foreign materials during the placing of concrete. The shape of the pile may be cylindrical, or conical, or a combination thereof, or it may be a succession of cylinders of equal length, with the change in diameter of adjoining cylinders not exceeding one inch.

1820.5.2 Allowable design stresses: The load on cased poured concrete piles shall be as provided in 780 CMR 1817.0 and shall not exceed the load computed on the basis of 33% of the 28-day strength of the concrete, nor 1,600 psi when applied to the cross-sectional area computed on the following basis:

1. For metal-cased piles driven to and into materials of Classes 1 to 4 inclusive, using the diameter measured one foot (0.3 m) above the point, except that when the rock is immediately overlain by a bearing stratum consisting of one or a combination of bearing materials of Classes 5, 6, and 7, using the diameter at the surface of the bearing stratum.
2. For metal-cased piles, driven through compressible materials including Classes 10 and 11 and into a bearing stratum consisting of one or a combination of bearing materials of Classes 5-9 inclusive, using the diameter at the surface of the bearing stratum.

1820.5.3 Installation: Piles shall have steel shells or casings which are mandrel-driven their full length in contact with the surrounding soil, left permanently in place and filled with concrete. The requirements of 780 CMR 1820.1.3 shall apply.

1820.6 Small diameter grouted piles:

1820.6.1 General: 780 CMR 1820.6 covers grouted cast-in-place piles which are less than 12 inches (305 mm) in diameter and in which all or a portion of the pile is cast directly against the soil without permanent casing.

1820.6.2 Materials: Concrete or sand-cement grout shall satisfy the provisions of 780 CMR 1820.1.1.

1820.6.3 Allowable load: The load on small diameter grouted piles shall not exceed the allowable load computed on the basis of the allowable stresses given in 780 CMR 1820.2.3 and the requirements of 780 CMR 1820.6.3.1 and 1820.6.3.2.

1820.6.3.1 Minimum reinforcing: The steel reinforcing shall be designed to carry the following minimum percentage of the design compression load:

1. For a pile or a portion of a pile grouted inside a temporary casing, grouted inside a hole drilled into rock, or grouted with a hollow-stem auger, the reinforcing steel shall be designed to carry not less than 40% of the design compression load.
2. For a pile or a portion of a pile grouted in an open drill hole without temporary or permanent casing or grouted within materials of Classes 1 through 5, the pile shall be designed to carry the entire design

45148

GP oct 30/01

compression load on the reinforcing steel. If a steel pipe section is used for reinforcing, any portion of the cement grout enclosed within the pipe may also be included at the allowable stress for the grout.

1820.6.3.2 Load test: For all design loads, the allowable load shall be determined by load tests in accordance with 780 CMR 1817.4. Load tests may be waived by the code official based on substantiating data and analyses prepared by a *registered design professional*.

1820.6.3.3 Alternative load test procedure for friction piles: For piles designed as friction piles, the friction capacity in compression may be verified by load testing in tension. The tension load test shall be performed in accordance with 780 CMR 1817.7, with the following exceptions:

1. The test pile must be cased or left ungrouted down to the top of the bearing stratum in a manner which will ensure that no friction resistance is developed above the bearing stratum.
2. The maximum design load shall be taken as 50% of the applied test load which results in a movement under load of ½ inch (13 mm) at the pile tip. The movement at the pile tip shall be a.) measured directly by a tell-tale or b.) computed by deducting the theoretical elastic elongation of the pile from the displacement measured at the top of the pile.

1820.6.4 Installation: The pile may be formed in a hole advanced by rotary or rotary percussive drilling methods (with or without temporary casing), by a hollow-stem auger, or by driving a temporary casing. The pile shall be grouted with a fluid cement grout. The grout shall be pumped through a tremie pipe extending to the bottom of the pile until grout of suitable quality returns at the top of the pile.

The following requirements apply to specific installation methods:

1. Piles grouted with temporary casing: For piles grouted inside a temporary casing, the reinforcing steel shall be inserted prior to withdrawal of the casing. The casing shall be withdrawn in a controlled manner with the grout level maintained at the top of the pile, to ensure that the grout completely fills the drill hole. During withdrawal of the casing, the grout level inside the casing shall be monitored to check that the flow of grout inside the casing is not obstructed.
2. Piles grouted without temporary casing: For a pile or portion of a pile grouted in an open drill hole in soil without temporary casing, the minimum design diameter of the drill hole shall be verified by a suitable device immediately prior to grouting. The reinforcing steel shall be inserted prior to grouting.
3. Piles grouted with hollow-stem augers: For piles installed with a hollow-stem auger, the grout shall be pumped under continuous pressure, and the rate of withdrawal of the auger shall be carefully controlled to ensure that the hole is completely filled with grout as the auger is withdrawn. The actual volume of grout pumped for each one foot (0.3 m) of withdrawal of the auger shall be recorded and must be equal to or greater than the theoretical volume. The reinforcing steel shall be inserted prior to withdrawal of the auger.
4. For piles designed for end bearing, a suitable means shall be employed to verify that the bearing surface is properly cleaned prior to grouting.
5. Subsequent piles shall not be drilled or driven near piles that have been grouted until the grout has had sufficient time to harden.

1820.6.5 Pile diameter: The design pile diameter shall be taken as:

1. The outside diameter of the temporary casing; or
2. The diameter of a full circumferential drill bit attached to the bottom of the temporary casing; or
3. The outside diameter of the hollow-stem auger; or
4. The borehole diameter verified by suitable measurements made immediately prior to grouting.

1820.6.6 Corrosion protection:

1. Minimum grout cover: Where steel reinforcing is not enclosed inside a permanent casing, centralizers shall be provided on the reinforcing to ensure a minimum grout cover of one inch (25 mm) in soil and ½ inch (13 mm) in rock. Grout cover requirements may be reduced when the reinforcing steel is provided with a suitable protective coating.
2. Permanent steel casing that is used as structural reinforcing shall be protected in accordance with the provisions of 780 CMR 1816.4.2.
3. For piles subjected to sustained tension loading in corrosive environments, the reinforcing steel shall be protected by a suitable protective coating or encapsulation method.

1820.6.7 Records: The owner shall engage a *registered design professional* to observe the installation of the piles in accordance with 780 CMR 1816.13. The design professional or his representative shall make an accurate record of the installation equipment used, pile dimensions, grouting volumes and procedures used and all other pertinent installation data.

46/48

G7 OCT 30/01

780 CMR 1821.0 PRECAST CONCRETE PILES

1821.1 Design and manufacture: All piles shall be designed and manufactured in accordance with accepted engineering practice to resist all stresses induced by handling, driving and service loads. The minimum lateral dimension shall be ten inches (254 mm). All corners of square piles shall be chamfered. Longitudinal steel shall be arranged in a symmetrical pattern and shall be laterally tied with steel ties or wire spiral spaced not more than three inches (76 mm) apart, center to center, for a distance of two feet (610 mm) from the ends of the pile; and not more than six inches (152 mm) elsewhere except that at the ends of each pile, the first five ties or spirals shall be spaced one inch (25 mm) center to center. When driven to or into bearing materials of Classes 1 to 6 inclusive, or through materials containing boulders, piles shall have metal tips of approved design.

1821.1.1 Installation: All piles shall be handled and driven so as not to cause injury or overstressing which affects durability or strength.

1821.2 Reinforced piles: Reinforced precast concrete piles shall conform to 780 CMR 1821.2.1 through 1821.2.5.

1821.2.1 Design: The minimum amount of longitudinal reinforcement shall be 2% of the concrete section and shall consist of at least four bars.

1821.2.2 Material: All concrete shall have a 28-day specified compressive strength (f'_c) of not less than 4,000 psi (2.81 kg/mm^2).

1821.2.3 Allowable stress: The allowable compressive stress in the concrete shall not exceed 33% of the 28-day specified compressive strength (f'_c) nor 1,600 psi applied to the gross cross-sectional area of the pile.

1821.2.4 Concrete cover: All pile reinforcement shall have a concrete cover of not less than two inches (51 mm), except that piles exposed to sea water shall have a minimum protective concrete cover of three inches (76 mm).

1821.2.5 Installation: A precast concrete pile shall not be driven before the concrete has attained a compressive strength of at least 3,000 psi (2.11 kg/mm^2), but not less than such strength sufficient to withstand handling and driving forces.

1821.2.6 Pile cap seismic connection: Precast concrete piles shall be connected to the pile cap in accordance with the requirements of 780 CMR 1820.1.2.2.

1821.3 Prestressed piles: Prestressed concrete piles shall conform to the requirements of 780 CMR 1821.3.1 through 1821.3.6.

1821.3.1 Design: The effective prestress in the pile shall not be less than 700 psi (0.49 kg/mm^2).

1821.3.2 Material: Prestressing steel shall conform to ASTM A416 listed in *Appendix A*. All concrete shall have a 28-day specified compressive strength (f'_c) of not less than 5,000 psi (3.52 kg/mm^2).

1821.3.3 Allowable stress: The maximum allowable design compressive stress (f_c) in concrete shall be determined as follows:

$$f_c = 0.33\, f'_c - 0.27\, f_{pc}$$

where f'_c is the 28-day compressive strength and f_{pc} is the effective prestress on the gross area of the pile section; however, 0.33 f'_c shall not exceed 1,600 psi.

1821.3.4 Installation: A prestressed pile shall not be driven before the concrete has attained a compressive strength of at least 4,000 psi (2.81 kg/mm2), but not less than such strength sufficient to withstand handling and driving forces.

1821.3.5 Pile cap seismic connection: Prestressed concrete piles shall be connected to the pile cap in accordance with the requirements of 780 CMR 1820.1.2.2 or by extension of the pile reinforcing strand into the pile cap. The embedment of reinforcing into the pile cap shall develop the strength of the reinforcing strand. Prestressed pile cap connections in buildings assigned to *Seismic Performance Category D*, in accordance with 780 CMR 1612.2.7, shall not be by development of exposed strand.

1821.3.6 Spiral seismic reinforcing: The upper two feet of the pile immediately below the pile cap shall have No. 3 ties minimum at not over four-inch spacing, or equivalent spirals. The spiral reinforcement in prestressed piles for buildings assigned to *Seismic Performance Category D*, in accordance with 780 CMR 1612.2.7, shall not be less than 0.6% for the full length of the pile where subjected to vertical *loads* only or where the design bending moment does not exceed 20% of the unfactored ultimate moment capacity at balanced strain conditions computed in accordance with ACI 318 listed in *Appendix A*.

780 CMR 1822.0 TIMBER PILES

1822.1 Materials: Round timber piles shall conform to ASTM D25 listed in *Appendix A*. Round timber piling shall be new longleaf, shortleaf, loblolly or slash species of Southern pine, oak, Douglas fir or other woods of similar strength and physical characteristics.

1822.2 Preservative treatment: Timber piles used to support permanent structures shall be pressure treated in accordance with AWPA C3 listed in *Appendix A* for round timber piles. Preservative-

47/48

G7 OCT 30/01

treated timber piles shall be subject to a quality control program administered by an approved agency. Pile cutoffs shall be treated in accordance with AWPA M4 listed in *Appendix A*.

1822.3 Allowable load:

1822.3.1 Allowable stress: The allowable stress in the timber shall not exceed 1,000 psi in compression at the critical cross-sectional area *taken at the top of the bearing stratum.* Piles designed for end bearing on materials of Classes 1 through 5 shall be designed for a maximum stress of 500 psi in compression on the pile cross-sectional area at the tip.

1822.3.2 Maximum Load: The load on timber piles shall not exceed the allowable load specified in 780 CMR 1817.0 nor 35 tons, whichever is smaller.

1822.3.3 Minimum dimensions: Timber piles shall be sized to conform to the minimum tip sizes as specified in ASTM D25 but no less than six inches (152 mm) in diameter at the tip.

1822.4 Precautions during driving:

1822.4.1 Hammer energy: Pile hammer energy shall be selected to prevent damage to the pile, but in no case shall the maximum hammer energy, as rated by the manufacturer, exceed 18,000 ft. lbs. For end bearing piles, on materials of Class 1 through 5, the maximum hammer energy shall be reduced.

1822.4.2 Driving resistance: Driving shall be stopped immediately when abrupt high resistance to penetration is encountered. Any sudden decrease in driving resistance of an end-supported timber pile shall be investigated with regard to the possibility of damage. If the sudden decrease in driving resistance cannot be correlated to loadbearing data, the pile shall be removed for inspection or rejected.

780 CMR 1823.0 COMPOSITE PILES

1823.1 Design: Composite piles consisting of two or more approved pile types shall be designed to meet the conditions of installation.

1823.2 Limitation of load: The maximum allowable load shall be limited by the capacity of the weakest section incorporated in the pile.

1823.3 Splices: Splices between concrete and steel or wood sections shall be designed to prevent separation both before and after the concrete portion has set, and to insure the alignment and transmission of the total pile load. Splices shall be designed to resist uplift caused by upheaval during driving of adjacent piles, and shall develop the full compressive strength and not less than 50% of the tension and bending strength of the weaker section.

780 CMR 1824.0 CONCRETE-FILLED PIPE WITH STEEL CORE CAISSONS

1824.1 Construction: These units shall consist of a shaft section of concrete-filled pipe extended to and firmly seated in bedrock of Classes 1 or 2 with an uncased socket drilled into the bedrock which is filled with cement grout. A steel core shall be centered in the shaft and shall extend through the cement grout to the bottom of the socket.

1824.2 Rock socket: A socket, approximately the inside diameter of the pipe, shall be made in bedrock of Classes 1 or 2 to a depth that will assure load transfer when computed for bearing on the bottom surface of the socket in accordance with 780 CMR 1803.0, 1807.0 and 1817.0 acting together with a bond stress on the perimeter surface of the socket. The socket design stress shall be determined by a *registered design professsional* based upon foundation investigation study in accordance with 780 CMR 1816, but in no case will the design bond stress on the perimeter of the socket exceed 200 psi. Load tests, in accordance with 780 CMR 1817.4, may be required by the code official if foundation investigation data are judged insufficient to verify the selected bond stress. The minimum socket depth shall be at least equal to the diameter of the pipe. Before placement of concrete, the socket and pipe shall be thoroughly cleaned and the rock inspected by a *registered design professional* or his qualified representative.

1824.3 Seismic design: All caisson piles shall meet the seismic design requirements of 780 CMR 1819.3.

1824.4 Material: Pipe and steel cores shall conform to the material requirements in 780 CMR 1818.0. Pipe shall have a minimum diameter of 18inches (457 mm) and a minimum wall thickness of ⅜ inch (9.5 mm) and shall be fitted with a suitable steel driving shoe welded to the bottom of the pipe. All concrete shall have a 28-day specified compressive strength (f'_c) of not less than 4,000 psi (2.81 kg/mm^2). The concrete mix shall be designed and proportioned so as to produce a cohesive workable mix with a slump of four inches (102 mm) to six inches (152 mm).

1824.5 Structural core: The gross cross-sectional area of the structural steel core shall not exceed 25% of the gross area of the caisson. The minimum clearance between the structural core and the pipe shall be two inches (51 mm). If cores are to be spliced, the ends shall be milled or ground to provide full contact and shall be full-depth welded.

1824.6 Allowable stress: The allowable design compressive stresses shall not exceed the following: concrete, 0.33 f'_c; steel pipe, 0.35 f_y; and structural steel core, 0.50 f_y.

48|48
G/ 00 30/01

1824.7 Installation: The rock socket and pile shall be thoroughly cleaned of all foreign materials before filling with cement grout and concrete. Steel cores shall be bedded in cement grout at the base of the rock socket.

1824.8 Spacing: The minimum center-to-center spacing shall be not less than 2½ times the outside diameter of the steel shell.

780 CMR 1825.0 RETAINING WALLS

1825.1 General: Walls built to retain or support the lateral pressure of earth or water or other superimposed loads shall be designed and constructed of approved masonry, reinforced concrete, steel sheet piling or other approved materials within the allowable stresses specified in 780 CMR 2311.7.

1825.2 Design: Retaining walls shall be designed to resist the pressure of the retained material, including both *dead* and *live load* surcharges to which such walls are subjected, and to insure stability against overturning, sliding, excessive foundation pressure and water uplift. Retaining walls shall be designed to resist seismic loads in accordance with 780 CMR 1612.4.9.

1825.3 Hydrostatic pressure: Unless drainage is provided, the hydrostatic head of the water pressure shall be assumed to be equal to the height of the wall.

1825.4 Coping: All masonry retaining walls, other than reinforced concrete walls, shall be protected with an approved coping.

1825.5 Guards: Where retaining walls with differences in grade level on either side of the wall in excess of four feet (1.2 m) are located closer than two feet (0.6 m) to a walk, path, parking lot or driveway on the high side, such retaining walls shall be provided with guards that are constructed in accordance with 780 CMR 1021.0 or other approved protective measures.

CALCULATION COVER SHEET

PROJECT New Bedford Harbor Superfund Site

SUBJECT Wastewater Treatment Plant, Heating Systems/Fuels Cost Comparison

CLIENT US Army Corps of Engineers- New England District (USACE- NED)

CALCULATION NO. M-01 PROJECT NO. _____

NO OF SHEETS 9 DESIGN LEVEL _____

CALCULATION BY OTHERS ____ YES ____ NO X PREPARER J Weeks JWW

REVIEWED BY E. LIVESEY DATE 10/23/01

ASSUMPTIONS THAT REQUIRE CONFIRMATION ___ YES X NO

ASSUMPTIONS CONFIRMED BY _____ DATE _____

PRINT NAME, DATE AND INITIAL

Rev No	Affected Sheets	Prepared by Date	Checked by Date	Verified by Date

Subject: New Bedford Harbor Heating System/Fuels Cost Comparison

This evaluation compares costs for heating the Waste Treatment Facility with Unit Heaters. A summary of total costs at present value using 7% interest and 3% annual fuel escalation costs over a plant life of 5 years is presented below. The system having the lowest "Total Cost at Present Value" is the most cost effective system.

Type of Cost	System Fuel Type			
	Electric	Natural Gas	Liquid Propane	Fuel Oil
First Cost (1)	$20,178	$18,602	$19,868	$33,043
Total Cost of Fuel & Maintenance at Present Value (2)	$28,980	$11,920	$14,650	$11,470
Total Cost at Present Value (3)	$49,160	$30,520	$34,520	$44,510

(1) See Attachment 2
(2) See Attachment 1
(3) Total Cost at Present Value = First Cost + Total Cost of Fuel & Maintenance at Present Value

The required heating capacity was estimated for a 75 foot by 90 foot by 30 foot high metal building having R-5 insulation on the walls and roof. Heating energy requirements were estimated to be 265,293,000 Btu per year based on 39,300 Btu per square foot per year in accordance with the 1999 ASHRAE Applications Handbook.

Fuel costs and energy use, estimated in this report, are included in Attachments 1 and 3.

Note the 39,300 Btu/ft^2-yr energy use estimate is an average for New England states, whereas; the New Bedford Harbor Water Treatment Facility is a high bay industrial facility. The combination of high ceilings and overhead doors associated with industrial facilities promote high infiltration air change rates and temperature stratification. Actual heating requirements and energy use may vary (i.e., increase) from the values reported here.

First costs for heating with Unit Heaters utilizing each fuel type were estimated using the 2000 Mean's Estimating Manual and is included as Attachment 2. Two annual service calls were estimated per year for each system which includes changing filters and performing routine maintenance.

A $50 hourly rate corresponding to a lead electrician or plumber rate from Mean's was used to determine maintenance costs. Total annual costs for the electric system maintenance were estimated at $200 per year with each gas system maintenance estimated at $250 per year and the fuel oil system maintenance estimated at $300 per year to reflect increased maintenance cost corresponding to the increased system complexity. The ASHRAE 2000 HVAC Systems and Equipment Handbook presents a further description of equipment and related maintenance.

Fuel Alternatives Cost Analysis

Basis of Calculation:

Project: New Bedford Harbor Water Treatment Plant
Building Size = 75 ft x 90 ft x 30 ft high
Design Heating Temperature = 40°F

$R_T = R_i + R + R_o$ Eq. 2, Page 23.8, 2001 ASHRAE Fundamentals Handbook
$U = 1/R_T$ Eq. 3, Page 23.8, 2001 ASHRAE Fundamentals Handbook

Perform a Simplified Estimate the Building Heating Load:

1. 75 ft by 90 ft metal building with an assumed R-5 one inch insulation board

2. $R_{Roof} = R_{Inside\ Film} + R_{Metal} + R_{Insulation} + R_{Outside\ Film}$
$R_{Roof} = 0.61_{Inside\ Film} + 0.0_{Metal} + 5.0_{Insultion} + 0.17_{Outside\ Film} = 5.78\ ft^2\text{-}yr\text{-}^oF/Btu$
$U = 1/R_T = 0.173\ Btu/\ ft^2\text{-}yr\text{-}^oF$

3. $R_{Wall} = R_{Inside\ Film} + R_{Metal} + R_{Insulation} + R_{Outside\ Film}$
$R_{Wall} = 0.68_{Inside\ Film} + 0.0_{Metal} + 5.0_{Insultion} + 0.17_{Outside\ Film} = 5.85\ ft^2\text{-}yr\text{-}^oF/Btu$
$U = 1/R_T = 0.171\ Btu/\ ft^2\text{-}yr\text{-}^oF$

4. $Q = U \times A \times TD = 0.173 \times 40(75 \times 90)_{Roof} + 0.171 \times 40[30(75+90+75+90)]$
Q = 114,430 Btuh Transmission Heating Load

5. Use approximately 8,500 cfm or 2.5 AC/Hr Infiltration Air Load
Q = 1.09cfm x TD
Q = 1.09 x 8,522 x 40 = 371,570 Btuh Infiltration Air Heating Load

6. Q_{Total} = 486,000 Btuh Estimated Required Heating Equipment Capacity

Determine Annual Estimated Heating Energy Use:

$E_h = e \times A/(\eta \times C)$

Where:
E_h = Annual Estimated Heating Energy
e = Annual Estimated Heating Energy per square foot
= 39,300 $Btu/ft^2\text{-}yr$ (From Ref. 4)
A = Building Area = 6,750 ft^2
η = System Efficiency based on the fuel type (From Ref. 5)
C = Btuh/Unit Specific Energy Type Conversion Factor (From Attachment 4, DOE Form 6200.1)

1. Electricity:

E_h = 39,300 $Btu/(ft^2\text{-}yr) \times 6{,}750\ ft^2/(1.00 \times 3{,}413\ Btu/kw\text{-}hr)$ = 77,730 kwh/yr

2. Natural Gas:

E_h = 39,300 $Btu/(ft^2\text{-}yr) \times 6{,}750\ ft^2/(0.80 \times 103{,}100\ Btu/therm)$ = 3,220 therm/yr

3. Liquid Propane:

E_h = 39,300 Btu/(ft^2-yr) x 6,750 ft^2/(0.80 x 95,500 Btu/gal) = 3,472 gal/yr

3. Fuel Oil:

E_h = 39,300 Btu/(ft^2-yr) x 6,750 ft^2/(0.80 x 138,700 Btu/gal) = 2,391 gal/yr

Table 1 below summarizes the Estimated Annual Fuel Use and Costs:

Table 1					
Energy Type	Eff	Annual Quantity	Units	Cost per Unit	Annual Cost
Electricity	1.00	77,730	kwh	$0.08333	$6,477
Liquid Propane	0.80	3,472	gal	$0.90	$3,125
No. 2 Heating Oil	0.80	2,391	gal	$0.98	$2,343
Natural Gas	0.80	3,220	therm	$0.7754	$2,497

Table 2 below summarizes the Present Value Annual Costs Occurring over the 5 Year Plant Life:

Table 2					
Energy Type	Annual Fuel Costs	Annual Maint. Costs	Sub-Total	P/A Factor	Annual Cost PV*
Electricity	$6,477	$200	$6,677	4.34	$28,980
Liquid Propane	$3,125	$250	$3,375	4.34	$14,650
Fuel Oil	$2,343	$300	$2,643	4.34	$11,470
Natural Gas	$2,497	$250	$2,747	4.34	$11,920

*PV = Total Annual Costs x P/A, where P/A = 4.34 is determined in Attachment 3

ID		A	B	C	D	E	F	G	
	2000 Means				Electric	Nat Gas	LP Gas	Oil	
	Mechanical		Unit		Total	Total	Total	Total	
	Reference No.	Item	Cost	Quantity	Cost	Cost	Cost	Cost	
	15540-900-2060	80 MBH Gas Suspended Heater w/fan	$725	8		$5,800	$5,800		
	15540-900-6000	94 MBH Oil Unit Heater	$2,200	8				$17,600	
	15550-440-0140	6" Dia, 10 ft high Vent Chimney @ $18.40 V.L	$184	8		$1,472	$1,472	$1,472	
	15770-200-6600	20 kw Electric Unit Heater, 480v	$1,900	8	$15,200				
	Oil Systems								
	15195-490-0166	1-1/2" Dia Foot Valve						$120	
	15195-490-0510	2" Locking Fill Box						$118	
	15195-490-0620	Spill Container						$620	
	15195-490-1060	50 gal/hr Oil Filter						$71	
	15195-490-1840	90 gph, 1-1/4 hp Pump & Motor						$1,050	
	15195-490-3000	Check Valve						$24	
	15195-490-5000	Vent Alarm						$28	
	15195-490-8060	96 gph Electric Heater						$795	
	13201-300-3140	5,000 gal above ground Stg Tank (Oil)						$5,100	
	13201-300-3080	1,000 gal above ground Stg Tank (LPG)					$1,425		
	15195-605-4030	Gas Meter				$192			
	Piping								
	15107-620-0560	1/2" Sch 40 ASTM A-53 Black Pipe	$8	300				$2,400	
	15107-620-0580	1" Sch 40 ASTM A-53 Black Pipe	$10	100				$1,000	
	15107-620-0580	1" Sch 40 ASTM A-53 Black Pipe	$10	300		$3,000	$3,000		
	15107-620-0650	4" Sch 40 ASTM A-53 Black Pipe	$30	100		$3,000	$3,000		
	15107-640-0090	1/2" Threaded Black CI Std Wt Elbow	$30	20				$600	
	15107-640-0110	1" Threaded Black CI Std Wt Elbow	$34	10				$340	
	15107-640-0110	1" Threaded Black CI Std Wt Elbow	$34	20		$680	$680		
	15107-640-0180	4" Threaded Black CI Std Wt Elbow	$180	10		$1,800	$1,800		
	15110-160-4950	1/2" 150-lb Threaded Bronze Globe Valve	$49	8				$392	
	15110-160-4970	1" 150-lb Threaded Bronze Globe Valve	$91	1				$91	
	15110-160-4970	1" 150-lb Threaded Bronze Globe Valve	$91	8		$728	$728		
	15110-200-3510	4" 125-lb Flanged CI Globe Valve	$765	1		$765	$765		
	15107-640-7030	1/2" Threaded 300-lb MI Union	$34	8				$272	
	15107-640-7590	1" Threaded 300-lb MI Union	$41	8		$328	$328	$82	
	15120-370-3470	4"x 9" Flgd 150-lb Flex Connector	$174	2		$348	$348		
	Electric Power								
	16210-600-2100	3p, 400amp Circuit Breaker			$1,850				
	16120-900-0480	70' 600v, 400kcmil Wire, $610(70'/100')			$427				
	16060-800-1230	20', 400kcmil Ground, $565(20'/100')			$113				
	16130-205-9190	4" dia PVC #40 Conduit $14.70 x 70 ft			$1,029				
		Assume Fittings = Conduit Cost			$1,029				
	Total			Sub-Total	$19,648	$18,113	$19,346	$32,175	
	Page 587	New Bedford, Mass. Div 15 Cost Index			102.7	102.7	102.7	102.7	
				Total	$20,178	$18,602	$19,868	$33,043	

Unit Heater Equipment Cost Comparison
Attachment 2

Reference Listing

1. 1980 ASHRAE Systems Handbook
   Boston Mass. Data
   Heating Degree Days = 5634 HDD below 65°F Page 43.3
   Avg. Winter Temp = 40°F

2. 2001 ASHRAE Fundamentals Handbook
   Boston Mass. Data
   Heating Dry Bulb Temperature = 7°F

3. Boston Mass. Record Lowest Temperature = -12°F
   http://205.156.54.206/er/box/climate/BOSTON__MA____.html

4. 1999 ASHRAE HVAC Applications Handbook, Page 34.8
   Heating Energy End Use = 37,700 Btu/ft^2-yr for New England states
   Ventilation Energy End Use = 1,600 Btu/ft^2-yr
   Total = 39,300 Btu/ft^2-yr

5. 2000 ASHRAE Systems & Equipment Handbook, Page 28.6
   Gas Furnace Efficiency = 80%
   Oil Furnace Efficiency = 80%

6. Energy Prices:

Electricity:	$0.08333/kwh	(NSTAR Electric)
Liquid Propane:	$0.90/gal	(Hank's Southeastern Propane)
No. 2 Fuel Oil:	$0.98/gal	(A-1 Discount Oil Co.)
Natural Gas:	$0.7754/therm (NSTAR Gas)	

7. Energy Conversion Values are from DOE Form 6200.1

8. Use the following economic evaluation from Engineering Economic Analysis, 3rd Ed., Donald Newnan, Page 79, Geometric Series Present Worth Factor:

$$(P/A, g, i, n) = [1-(1 + g)^n(1+i)^{-n}]/(i-g)$$

Where:
P/A = Present Value of an Annuity Factor
g = 3% Annual fuel escalation factor
i = 7% Annual interest rate
n = 5 Year plant life

$$(P/A, g, i, n) = [1-(1 + 0.03)^5(1+0.07)^{-5}]/(0.07-0.03)$$
$$(P/A, g, i, n) = 4.34$$

Attachment 4

DOE Form 6200.1

QUARTERLY ENERGY CONSERVATION PERFORMANCE REPORT

Instructions

1. PURPOSE AND BACKGROUND.

As a Federal agency, DOE is required to report the energy consumed in its owned and leased facilities each quarter of the fiscal year. All DOE sites must complete DOE F 6200.1 "Quarterly Energy Conservation Performance Report."

2. ENERGY REPORTING CATEGORIES.

All energy consumed at DOE sites shall be reported in one of the three following categories:

a. Metered Process energy must be used for other than housekeeping consumption for lighting, heating, ventilation, and air-conditioning. Metered process energy consumption must be separately metered; it cannot be an estimated allocation of the total amount. In those instances where heavy processes comprise the predominant portion (greater than 80 percent) of a facility's energy consumption, but the process cannot be separated from the housekeeping consumption of that facility, the entire facility may be reported as metered process. The purpose of this category of energy consumption is to identify the heavier, nonbuilding, machine or production line consumption that varies year to year in direct response to programmatic activity. It is not the intent, nor is it feasible, to remove all process energy consumption from the buildings energy consumption category of the Department.

b. Buildings energy consumption is all energy consumed at a site other than that consumed by metered process. Thus, building energy consumption includes energy consumed for heating, cooling, ventilation, lighting, and other housekeeping functions, as well as unmetered process consumption.

c. Vehicles and Equipment energy is the fuel used in vehicles and equipment for official Government business, on and off DOE sites, that is not reported by some other Federal agency.

3. ENERGY TO BE REPORTED.

Consumption changes in any reporting category of greater than 5 percent in a quarter, or in the year-to-date total as compared to the base year or to the previous year, require an explanation. The energy reported for each fuel type shall be that entering the site, less any energy leaving the site. This means all onsite line losses and conversion losses (except from nuclear sources) must be included in the report as energy consumed. The following situations are examples:

a. Steam is generated at the site for heating and industrial use. The total source fuel (natural gas, coal, fuel oil, or other) consumed to generate this steam is reported. No deductions are taken for line losses or for boiler efficiency.

b. Electricity is purchased and some is sold to offsite customers. The purchased electricity reported is that entering the site, less the amount transmitted offsite.

c. Electricity is generated onsite. The total source fuel consumed to generate the electricity is reported. If additional electricity is purchased, that amount is reported as electricity.

4. COSTS TO BE REPORTED.

The costs reported shall be the billed cost for the energy consumed. For electricity, the cost shall include demand charges and connection charges, as well as consumption charges.

5. SQUARE FOOTAGE TO BE REPORTED.

Buildings and metered process square footage is reported and used to analyze changes in energy consumption. These factors are defined as:

a. Building Space. The gross square footage of all DOE owned or leased buildings, permanent or temporary (including trailers) for which energy consumption is reported in the Quarterly Energy Conservation Performance Report in the buildings category.

b. Metered Process Space. The gross square footage of all DOE owned or leased buildings, permanent or temporary (including trailers) for which energy consumption is reported in the Quarterly Energy Conservation Performance Report in the metered process category.

6. COMPLETING DOE F 6200.1 "QUARTERLY ENERGY CONSERVATION PERFORMANCE REPORT"

a. Heading.

(1) Site number assigned by the Chief of In-house Energy Management (MA-223.3).

(2) Site or office name.

(3) Quarter, fiscal year in which the energy was consumed.

b. Body.

(1) Category and Type. Report each category and type of energy in the standard units found on the form. The DOE standard Btu conversion factors shall be used without exception.

(2) Consumption in Quarter. Report the standard units consumed to three decimal places. For example, 11,000 gallons of fuel oil would be reported as "11.000." You must fill out all spaces after the decimal for correct keypunching and data entry.

(3) Explanation of "Other" Fuels. For each category of energy, list the specific energy types or fuels reported as "other," along with the Btu's consumed.

(4) Buildings Space. Report in thousands of square feet to one decimal place. For example, 1,153,000 square feet would be reported as 1153.0. One digit to the right of the decimal must be filled in for correct entry of data into the computer.

(5) Metered Process Space. Report in thousands of square feet to one decimal place. For example, 2,543,100 square feet would be reported as 2543.1. One digit to the right of the decimal must be filled in for correct entry into the computer.

c. Footing.

(1) Check the appropriate box to indicate whether the report is the initial or a revised submission for the quarter.

(2) Indicate the name and the FTS phone number of the preparer and the date the form was prepared.

7. REVISIONS TO PREVIOUSLY REPORTED DATA.

Revision to previously reported data shall be submitted on DOE F 6200.1 with the "revised" box of the footer checked. Only those numbers to be corrected shall be submitted. A short explanation of the revision shall be footnoted. For example, received corrected bills, arithmetic error, or originally submitted in wrong category.

DOE STANDARD BTU CONVERSION FACTORS FOR ENERGY CONSERVATION REPORTING

TYPE OF ENERGY	BTU CONTENT	BILLION BTU PER REPORTING UNIT
Electricity (1) 3,413 Btu/Kwh at Site	11,600 Btu/kWh Point of generation	0.0116 per MWh (megawatthour)
Fuel Oil (2)	138,700 Btu/gallon	0.1387 per 1,000 gallons
Natural gas	1,031 Btu/cubic foot	0.001031 per 1,000 cubic feet ($\frac{1,031,000 \text{ Btu}}{1,000 \text{ ft}^3}$)
LPG (3)	95,500 Btu/gallon	0.0955 per 1,000 gallon
Coal	24,580,000 Btu/short ton	0.02458 per short ton
Purchased steam (4)	1,390 Btu/pound	0.00139 per 1,000 pounds
Other (Examples)		
Chilled water (5)	24,000 Btu/ton-hour	0.024 per 1,000 ton-hours
Methanol	56,560 Btu/gallon	0.05656 per 1,000 gallons
Ethanol	75,670 Btu/gallon	0.07567 per 1,000 gallons
Automotive gasoline	125,000 Btu/gallon	0.125 per 1,000 gallons
Diesel (2)	138,700 Btu/gallon	0.1387 per 1,000 gallons
Aviation gasoline	125,000 Btu/gallon	0.125 per 1,000 gallons
Jet Fuel	130,000 Btu/gallon	0.130 per 1,000 gallons

(1) Assumes 10,536 Btu per kWh generated at station and 9 percent line loss.
(2) Includes all other petroleum distillates not specifically identified, e.g., kerosene, and residuals.
(3) Includes propane and butane.
(4) Assumes 1000 Btu per pound of steam generated at boiler plant, 80% boiler efficiency and 10% line loss.
(5) Assumes 12,000 Btu per ton-hour, and overall efficiency of 50 percent.

ATT. 5
1 of 1

81c

Table 1A Heating and Wind Design Conditions—United States

Station	WMO#	Lat.	Long.	Elev., ft	StdP, psia	Dates	Heating Dry Bulb 99.6%	Heating Dry Bulb 99%	Extreme Wind Speed, mph 1%	2.5%	5%	Coldest Month 0.4% WS	0.4% MDB	1% WS	1% MDB	MWS/PWD to DB 99.6% MWS	99.6% PWD	0.4% MWS	0.4% PWD	Extr. Annual Daily Mean DB Max.	Mean DB Min.	StdD DB Max.	StdD DB Min.
1a	1b	1c	1d	1e	1f	1g	2a	2b	3a	3b	3c	4a	4b	4c	4d	5a	5b	5c	5d	6a	6b	6c	6d
Russell	724585	38.87	98.82	1864	13.732	8293	−4	3	29	26	23	29	33	25	35	11	10	16	190	105	−8	3.6	8.5
Salina	724586	38.80	97.65	1273	14.032	8293	−3	4	27	23	22	28	33	24	34	11	360	15	180	106	−7	2.3	9.9
Topeka	724560	39.07	95.62	886	14.231	6193	−2	4	25	22	20	25	28	22	29	9	320	12	180	100	−8	3.8	7.4
Wichita, Airport	724500	37.65	97.43	1339	13.998	6193	2	8	29	25	23	28	30	26	31	13	360	16	200	105	−4	2.9	6.3
Wichita, McConnell AFB	724505	37.62	97.27	1371	13.982	8293	2	10	25	23	20	25	38	23	36	11	360	12	190	105	−1	2.7	7.7
KENTUCKY																							
Bowling Green	746716	36.97	86.42	548	14.407	8293	7	14	20	19	17	21	40	19	40	6	220	9	230	97	−2	3.2	10.3
Covington/Cincinnati A	724210	39.05	84.67	876	14.236	6193	1	7	22	20	18	25	30	22	33	9	250	10	230	95	−7	3.1	8.5
Ft. Campbell, AAF	746710	36.67	87.50	571	14.395	8293	9	15	19	16	14	20	40	17	43	4	330	6	240	98	0	3.1	9.5
Ft. Knox, Godman AAF	724240	37.90	85.97	755	14.299	8293	9	15	17	15	13	18	42	16	39	4	290	6	270	97	0	4.1	7.9
Jackson	724236	37.60	83.32	1381	13.977	8293	7	14	17	14	13	18	44	16	40	7	230	6	230	94	−3	2.7	9.4
Lexington	724220	38.03	84.60	988	14.179	6193	4	10	21	19	17	23	38	20	38	8	270	9	240	94	−4	3.5	8.3
Louisville	724230	38.18	85.73	489	14.438	6193	6	12	22	19	17	22	40	20	34	10	290	10	250	96	−1	3.1	7.9
Paducah	724350	37.07	88.77	413	14.477	8293	7	13	22	19	17	22	45	19	42	8	40	9	180	98	−1	2.9	9.4
LOUISIANA																							
Alexandria, England AFB	747540	31.33	92.55	89	14.648	8293	27	30	16	13	12	17	53	15	49	7	360	3	180	98	20	2.2	6.3
Baton Rouge	722317	30.53	91.15	69	14.659	6193	27	30	20	18	16	21	48	19	49	8	360	8	270	97	20	2.2	5.4
Bossier City, Barksdale AFB	722485	32.50	93.67	167	14.607	8293	22	27	18	16	14	19	49	16	51	7	360	5	180	99	15	2.3	6.7
Lafayette	722405	30.20	91.98	43	14.673	8293	28	32	21	18	16	21	54	19	53	9	10	8	200	97	19	1.6	8.1
Lake Charles	722400	30.12	93.22	33	14.678	6193	29	32	22	19	17	24	50	21	49	10	20	8	230	96	23	2.3	4.7
Leesville, Ft. Polk	722390	31.05	93.20	328	14.522	8293	27	30	16	13	12	16	51	14	52	4	20	4	180	98	20	2.0	5.9
Monroe	722486	32.52	92.03	79	14.654	8293	22	27	19	17	15	20	50	18	47	9	10	7	230	99	17	1.8	8.5
New Orleans, Intl Airport	722310	29.98	90.25	30	14.680	6193	30	34	21	19	17	21	48	19	49	7	340	8	360	96	23	2.0	5.3
New Orleans, Lakefront A	722315	30.05	90.03	10	14.690	8293	35	39	22	19	18	21	49	20	50	14	360	9	300	94	21	8.1	12.4
Shreveport	722480	32.47	93.82	259	14.558	6193	22	26	20	18	16	22	46	19	48	9	360	8	180	99	16	3.1	5.6
MAINE																							
Augusta	726185	44.32	69.80	351	14.510	8293	−3	1	23	21	19	25	20	22	22	10	320	11	210	93	−10	3.1	3.4
Bangor	726088	44.80	68.83	194	14.593	8293	−7	−2	22	19	17	24	18	21	20	6	300	10	240	94	−16	2.9	5.9
Brunswick, NAS	743920	43.88	69.93	75	14.655	8293	−2	2	20	17	15	21	27	19	25	4	340	9	190	96	−12	7.9	6.1
Caribou	727120	46.87	68.02	623	14.367	6193	−14	−10	28	24	22	30	13	27	11	10	270	13	250	90	−23	2.8	4.5
Limestone, Loring AFB	727125	46.95	67.88	745	14.304	8293	−13	−9	23	20	18	25	12	22	11	7	300	9	260	91	−20	2.3	2.9
Portland	726060	43.65	70.32	62	14.662	6193	−3	2	24	21	18	24	26	21	25	7	320	12	270	93	−13	3.6	5.5
MARYLAND																							
Camp Springs, Andrews AFB	745940	38.82	76.87	282	14.546	8293	13	18	21	18	16	23	30	21	32	7	350	9	230	98	4	2.9	6.7
Baltimore, BWI Airport	724060	39.18	76.67	154	14.614	6193	11	15	24	21	19	25	31	22	31	10	290	11	280	97	4	2.9	5.8
Lex Park, Patuxent River NAS	724040	38.28	76.40	39	14.675	8293	16	21	20	17	15	22	30	19	35	9	340	9	270	98	8	2.3	6.1
Salisbury	724045	38.33	75.52	52	14.668	8293	13	18	20	18	16	20	35	19	37	6	10	9	240	97	4	2.7	5.8
MASSACHUSETTS																							
Boston	725090	42.37	71.03	30	14.680	6193	7	12	29	25	23	30	30	27	28	17	320	14	270	96	0	2.7	4.7
East Falmouth, Otis ANGB	725060	41.65	70.52	131	14.626	8293	11	14	26	22	20	26	34	23	33	9	300	10	240	90	5	2.5	3.8
Weymouth, S Weymth NAS	725097	42.15	70.93	161	14.610	8293	6	11	19	16	14	18	29	16	29	7	320	9	260	97	−2	3.8	3.8
Worcester	725095	42.27	71.88	1010	14.167	6193	0	5	27	23	20	29	22	26	21	14	270	10	270	90	−6	1.9	4.1
MICHIGAN																							
Alpena	726390	45.07	83.57	692	14.332	6193	−7	−1	21	19	17	22	20	19	20	5	270	11	240	93	−17	3.4	5.9
Detroit, Metro	725370	42.23	83.33	663	14.347	6193	0	5	27	23	21	28	28	24	27	11	240	13	230	95	−7	3.0	5.4
Flint	726370	42.97	83.75	764	14.294	6193	−2	3	25	22	20	27	24	23	23	8	230	13	230	93	−10	3.1	5.0
Grand Rapids	726350	42.88	85.52	804	14.274	6193	0	5	25	22	20	26	25	23	24	8	180	13	240	93	−9	2.1	5.3
Hancock	727440	47.17	88.50	1079	14.131	6193	−9	−4	21	19	18	23	18	20	16	8	270	10	250	90	−16	2.9	5.6
Harbor Beach	725386	44.02	82.80	600	14.379	8293	9	12	26	22	19	26	27	23	27	10	220	9	230	94	2	2.9	4.1
Jackson	725395	42.27	84.47	1001	14.172	8293	−3	4	20	19	17	23	22	20	23	9	240	11	210	93	−11	2.5	5.6
Lansing	725390	42.77	84.60	873	14.238	6193	−3	2	26	23	20	28	23	25	24	8	290	13	250	94	−13	2.8	5.9
Marquette, Sawyer AFB	727435	46.35	87.40	1220	14.059	8293	−11	−6	24	21	18	26	18	23	17	6	280	10	210	91	−18	4.7	4.7
Marquette/Ishpeming A	727430	46.53	87.55	1424	13.955	8293	−13	−8	22	19	18	22	20	20	16	8	270	11	230	90	−22	4.5	4.5
Mount Clemens, ANGB	725377	42.62	82.83	581	14.390	8293	3	7	21	18	16	25	21	21	24	7	280	9	230	95	−3	4.0	2.7
Muskegon	726360	43.17	86.25	633	14.362	6193	3	7	27	24	22	28	25	25	26	10	290	12	200	90	−5	2.7	5.0
Oscoda, Wurtsmith AFB	726395	44.45	83.40	633	14.362	8293	0	3	21	19	17	23	26	21	24	6	220	11	200	95	−7	4.1	4.7
Pellston	727347	45.57	84.80	719	14.318	8293	−9	−3	26	23	20	28	22	24	22	4	300	14	250	92	−21	3.1	4.9
Saginaw	726379	43.53	84.08	669	14.343	8293	0	4	23	21	19	25	22	22	23	10	260	13	240	96	−6	5.8	4.5
Sault Ste. Marie	727340	46.47	84.37	725	14.314	6193	−12	−7	23	20	18	24	19	21	18	7	90	10	230	89	−22	3.5	5.4
Seul Choix Point	726399	45.92	85.92	591	14.385	8293	0	4	28	24	22	30	27	26	27	9	300	8	200	82	−5	2.3	6.3
Traverse City	726387	44.73	85.58	623	14.367	6193	−3	2	21	19	18	23	23	21	23	7	180	13	230	94	−13	2.8	7.3
MINNESOTA																							
Alexandria	726557	45.87	95.40	1424	13.955	8293	−20	−15	25	22	20	28	12	24	8	10	300	14	180	96	−26	3.6	4.5
Brainerd, Pequot Lakes	727500	46.60	94.32	1280	14.029	8293	−24	−17	11	10	9	11	8	10	11	3	320	5	190	95	−30	7.9	6.8
Duluth	727450	46.83	92.18	1417	13.958	6193	−21	−16	25	22	20	25	12	22	11	10	310	12	230	90	−28	2.8	4.7
Hibbing	727455	47.38	92.83	1352	13.992	8293	−25	−20	20	19	17	20	13	19	13	6	330	11	200	92	−34	2.5	4.7
International Falls	727470	48.57	93.38	1184	14.077	6193	−29	−23	22	20	18	22	10	20	8	6	270	11	180	92	−37	3.4	3.8
Minneapolis-St. Paul	726580	44.88	93.22	837	14.257	6193	−16	−11	25	22	20	25	12	22	14	9	300	14	180	97	−22	3.5	5.4
Redwood Falls	726556	44.55	95.08	1024	14.160	8293	−17	−12	26	22	20	28	14	24	15	11	280	14	180	99	−22	4.1	5.2
Rochester	726440	43.92	92.50	1319	14.008	6193	−17	−12	29	26	24	32	12	28	12	13	300	15	200	94	−23	3.7	5.2

WMO# = World Meteorological Organization number
AFB = Air Force Base
NAS = Naval Air Station
WSO = Weather Service Office
AAF = Army Air Field
MCAS = Marine Corps Air Station
DB = dry-bulb temperature, °F
Lat. = North latitude °
Long. = West longitude °
Elev. = elevation, ft
StdP = standard pressure at station elevation, psia
WS = wind speed, mph
PWD = prevailing wind direction, ° True

ATT. 6
1 of 1

9/9

See http://www.eia.doe.gov/emeu/cbecs/detailed_tables_1995.html

Table 2A 1995 Commercial Building Energy Consumption

Consumption shown is on an annual basis per square foot of building area. *Source*: DOE/EIA 0318(95) 1998

Source Table Number	1	1	3		10	10	19	19	21	21	27	31	33	33	33	33	33	33
			Major Fuels		Electricity				Nat. Gas		Fuel Oil	Distr. Heat	Energy End Use:					
Building Characteristics	Total# Bldgs., Thousands	Total Floor Space, 10^6 ft^2	1000 Btu/ft^2	$/ft^2	kWh/ft^2	Med. kWh/ft^2	Med. Peak W/ft^2	Med. Load Fact.	CF/ft^2	Med. CF/ft^2	Gal/ft^2	lb/ft^2	Total	Space Heat	Cool	Venti-lation	Water Heat	Light-ing
All Buildings	4,579	58,772	90.5	1.19	13.4	7.2	5.4	0.253	49.7	39.7	0.12	94.14	90.5	29.0	6.0	2.8	13.8	20.4
Building Floor Space																		
1001 to 5000 ft^2	2,399	6,338	111.7	1.83	18.7	8.5	8.0	0.239	87.2	51.0	0.34		111.7	39.5	7.0	2.9	9.7	22.7
5001 to 10000 ft^2	1,035	7,530	82.8	1.07	9.9	6.2	5.2	0.248	58.8	29.1	0.28		82.8	38.5	4.4	1.7	11.1	13.6
10001 to 25000 ft^2	745	11,617	70.9	0.96	10.0	5.6	3.3	0.246	45.9	29.3	0.23	103.56	70.9	27.4	4.8	1.7	9.1	14.7
25001 to 50000 ft^2	213	7,676	82.0	1.13	12.1	7.3	3.6	0.295	42.8	27.2	0.17	84.62	82.0	28.2	6.7	2.1	11.6	18.5
50001 to 100000 ft^2	115	7,968	87.6	1.11	13.5	8.9	3.2	0.337	42.3	23.4	0.11	81.02	87.6	27.0	7.0	3.2	12.9	21.3
100001 to 200000 ft^2	48	6,776	101.4	1.16	15.0	12.4	3.5	0.393	51.3	28.4	0.07	75.38	101.4	26.6	6.2	3.3	19.6	25.0
200001 to 500000 ft^2	19	5,553	114.6	1.31	16.2	10.5	3.1	0.458	52.1	25.9	0.06	77.72	114.6	24.0	6.7	4.5	25.2	27.4
Over 500000 ft^2	6	5,313	96.8	1.23	16.3	13.2	3.2	0.521	32.9	8.8	0.03	68.71	96.8	18.5	6.0	3.9	18.0	28.6
Principal Building Activity																		
Education	309	7,740	79.3	0.92	8.4	6.1	4.3	0.210	41.1	38.6	0.17	84.51	79.3	32.8	4.8	1.6	17.4	15.8
Food sales	137	642	213.5	4.11	54.1	55.6	14.7	0.463	42.6	31.7			213.5	27.5	13.4	4.4	9.1	33.9
Food service	285	1,353	245.5	3.56	36.0	25.5	12.7	0.333	153.5	135.2			245.5	30.9	19.5	5.3	27.5	37.0
Health care	105	2,333	240.4	2.26	26.5	15.7	5.9	0.253	143.0	66.3	0.10	109.51	240.4	55.2	9.9	7.2	63.0	39.3
Lodging	158	3,618	127.3	1.41	15.2	11.7	4.9	0.364	73.2	57.6		92.63	127.3	22.7	8.1	1.7	51.4	23.2
Mercantile and service	1,289	12,728	76.4	1.10	11.8	6.9	4.9	0.249	45.2	40.4	0.14		76.4	30.6	5.8	2.5	5.1	23.4
Office	705	10,478	97.2	1.51	18.9	12.2	6.0	0.285	35.7	33.2	0.06	49.28	97.2	24.3	9.1	5.2	8.7	28.1
Public assembly	326	3,948	113.7	1.26	12.7	5.8	5.5	0.197	51.9	45.6	0.09		113.7	53.6	6.3	3.5	17.5	21.9
Public order and safety	87	1,271	97.2	1.22	11.3	3.9	5.0	0.280	43.6	43.6	0.22		97.2	27.8	6.1	2.3	23.4	16.4
Religious worship	269	2,792	37.4	0.48	3.4	2.9	4.2	0.092	28.0	27.4	0.21		37.4	23.7	1.9	0.9	3.2	5.0
Warehouse and storage	580	8,481	38.3	0.56	6.4	3.2	2.2	0.265	22.4	21.2	0.09		38.3	15.7	0.9	0.3	2.0	9.8
Other	67	1,004	172.2	1.86	22.1	11.3	7.3	0.227	82.4	35.4			172.2	59.6	9.3	8.3	15.3	26.7
Vacant	261	2,384	21.5	0.27	3.9	2.4	2.4	0.189	38.8	21.0	0.16		21.5	11.9	0.6	0.3	2.4	3.6
Year Constructed																		
1919 or before	353	3,673	79.4	0.90	8.3	4.8	4.0	0.231	49.8	47.6	0.17	55.73	79.4	34.2	2.6	1.6	10.0	14.9
1920 to 1945	562	6,710	75.7	0.84	8.2	5.1	4.7	0.240	44.9	40.4	0.23	98.36	75.7	37.0	3.4	1.6	10.7	12.3
1946 to 1959	867	9,298	88.9	1.06	10.4	6.5	4.2	0.231	58.8	44.1	0.20	60.24	88.9	37.2	4.4	2.1	14.1	15.5
1960 to 1969	718	10,858	94.3	1.21	13.0	7.2	5.9	0.266	50.9	47.5	0.13	88.27	94.3	30.2	5.7	2.7	16.8	20.4
1970 to 1979	813	11,333	99.3	1.36	16.0	8.8	6.2	0.259	51.8	32.7	0.07	92.42	99.3	26.0	7.2	3.6	15.8	25.6
1980 to 1989	846	12,252	86.5	1.30	15.9	10.0	6.0	0.269	39.0	28.4	0.05		86.5	19.8	7.8	3.2	11.5	23.2
1990 to 1992	218	2,590	114.6	1.55	18.8	9.4	8.0	0.292	58.9	29.1	0.03		114.6	26.6	8.4	3.5	17.2	28.7
1993 to 1995	202	2,059	92.2	1.32	17.5	8.4	4.9	0.295	48.2	42.5	0.10		92.2	24.3	7.9	3.2	11.7	22.7
Floors																		
One	3,018	24,552	75.2	1.10									75.2	26.0	5.6	2.1	7.9	17.0
Two	1,002	14,122	79.4	1.09									79.4	28.2	5.7	2.1	10.9	18.1
Three	399	7,335	92.0	1.09									92.0	34.8	5.1	2.3	15.0	18.6
Four to nine	148	8,789	139.8	1.51									139.8	36.5	7.5	4.8	30.2	31.0
Ten or more	12	3,975	113.4	1.54									113.4	23.1	7.3	5.6	21.8	29.6
Census Region and Division																		
Northeast	725	11,883	87.1	1.39	11.2	5.2	3.7	0.260	40.6	29.1	0.22	76.31	87.1	32.4	4.0	2.0	14.2	17.5
New England	204	3,140	87.3	1.28	9.4	5.8	5.3	0.295	50.0	40.8	0.28	100.91	87.3	37.7	3.3	1.6	15.2	16.0
Middle Atlantic	521	8,743	87.1	1.43	11.8	5.2	3.3	0.246	38.3	28.6	0.19	72.71	87.1	30.4	4.3	2.1	13.9	18.4
Midwest	1,139	14,322	104.5	1.05	11.8	6.8	5.1	0.238	66.9	59.8	0.04	91.17	104.5	46.7	4.3	2.5	15.6	18.8
East North Central	739	9,655	102.2	1.05	11.1	5.6	4.5	0.238	65.2	62.1	0.05	93.69	102.2	45.5	4.3	2.2	16.0	17.4
West North Central	401	4,668	109.3	1.06	13.3	8.1	6.8	0.228	71.0	54.3	0.03	86.73	109.3	49.1	4.3	3.0	14.8	21.8
South	1,750	20,830	80.8	1.07	14.9	8.5	5.8	0.261	41.9	29.3	0.08	80.25	80.8	18.0	8.4	3.2	10.5	21.3
South Atlantic	676	9,475	81.5	1.15	15.4	8.5	6.7	0.294	39.9	34.9	0.10	139.92	81.5	17.3	8.8	3.3	9.3	22.2
East South Central	477	4,917	84.8	0.99	14.9	9.8	6.6	0.253	50.5	38.3	0.06		84.8	24.4	7.5	2.7	11.7	21.2
West South Central	597	6,438	76.7	1.00	14.3	7.8	5.2	0.249	37.7	22.0			76.7	14.2	8.7	3.3	11.4	20.1
West	964	11,736	94.2	1.38	14.8	7.3	6.7	0.244	46.1	30.4	0.02		94.2	23.4	5.5	3.1	17.0	23.6
Mountain	319	3,855	111.3	1.15	13.9	6.5	6.8	0.244	55.5	42.2			111.3	40.8	5.9	3.3	21.4	21.7
Pacific	646	7,881	85.9	1.49	15.3	8.8	6.7	0.244	41.3	26.8	0.02	70.65	85.9	14.9	5.4	3.1	14.8	24.5
Climate Zones: 45 Year Average																		
<2000 CDD and >7000 HDD	493	5,098	97.8	0.98	10.6	5.2	5.8	0.263	68.7	50.2	0.20	110.09	97.8	47.3	3.1	1.8	14.2	17.7
5500 to 7000 HDD	975	14,597	109.0	1.22	11.7	5.6	5.0	0.238	62.6	51.0	0.13	134.98	109.0	48.4	4.1	2.4	18.2	18.6
4000 to 5499 HDD	1,070	15,155	92.8	1.24	14.1	6.2	4.0	0.251	48.4	40.0	0.14	67.32	92.8	29.5	5.4	2.9	13.3	22.2
Fewer than 4000 HDD	1,103	13,491	79.9	1.25	14.3	9.3	6.7	0.257	37.7	28.8		93.65	79.9	15.9	6.8	2.9	12.3	21.6
>2000 CDD and <4000 HDD	937	10,430	71.6	1.10	15.0	8.7	5.4	0.253	35.0	22.9			71.6	9.1	9.7	3.3	10.2	20.3
Workers (Main Shift)																		
Fewer than 5	2,505	13,885	56.8	0.79	7.8	5.3	5.3	0.218	44.1	41.0	0.25		56.8	26.9	2.5	1.3	8.1	9.5
5 to 9	798	6,291	80.8	1.10	10.5	8.5	5.3	0.268	52.9	42.6	0.20		80.8	36.1	4.6	1.8	8.8	15.3
10 to 19	625	7,102	86.5	1.18	12.1	9.5	6.1	0.253	55.9	30.1	0.27		86.5	31.9	5.9	2.0	9.9	17.9
20 to 49	400	9,132	95.1	1.29	13.6	12.9	5.5	0.314	50.4	39.8	0.19	106.84	95.1	30.5	6.8	2.2	12.9	20.6
50 to 99	138	6,931	90.9	1.17	13.2	10.6	4.2	0.330	44.6	29.3	0.12	103.56	90.9	27.6	6.8	2.3	16.2	22.3
100 to 249	71	5,988	108.3	1.35	16.4	15.1	4.9	0.366	50.4	32.3	0.09	74.51	108.3	27.4	8.5	3.6	20.2	26.7
250 or more	43	9,443	133.7	1.65	21.7	16.4	5.1	0.454	51.0	27.2	0.03	74.62	133.7	25.7	8.9	6.3	23.5	36.5
Weekly Operating Hours																		
39 or fewer	899	6,134	29.3	0.39	3.6	2.7	4.9	0.142	33.8	29.1	0.21		29.3	16.8	1.6	0.7	3.0	3.6
40 to 48	1,257	13,233	66.4	0.89	9.0	6.8	4.5	0.217	41.6	33.9	0.15		66.4	31.6	4.3	1.9	5.3	12.4
49 to 60	969	12,242	76.6	1.08	12.0	6.9	4.6	0.240	36.6	30.9	0.15	83.27	76.6	29.4	5.1	2.9	6.7	18.3
61 to 84	567	10,052	79.2	1.16	12.7	10.2	5.1	0.276	38.6	45.7	0.10	70.74	79.2	24.7	6.3	2.7	8.6	21.8
85 to 167	420	6,202	134.0	1.87	20.7	31.4	10.2	0.362	59.6	72.6	0.11		134.0	34.0	8.9	3.6	20.5	32.0
Open continuously	466	10,908	155.7	1.76	21.3	12.7	5.8	0.374	81.7	55.4	0.08	87.69	155.7	33.2	9.5	4.4	39.1	34.3
Ownership and Occupancy																		

Blank = data not available, or less that 20 buildings, or error is >50%. * = more than one may apply; ** = for demand metered buildings. Med. = Median

CALCULATION COVER SHEET

PROJECT New Bedford Harbor Superfund Site OU#1

SUBJECT Water Treatment Plant Flow Rate

CLIENT U.S. Army Corps of Engineers – New England District (USACE – NED)

CALCULATION NO. P-01 PROJECT NO. 5197.1720.3392

NO OF SHEETS 22 DESIGN LEVEL _____

CALCULATION BY OTHERS _____ YES X NO

PREPARER J. Brinkman

REVIEWED BY [illegible] DATE 10-30-01

ASSUMPTIONS THAT REQUIRE CONFIRMATION _____ YES _____ NO

ASSUMPTIONS CONFIRMED BY _____ DATE _____

PRINT NAME, DATE AND INITIAL

Rev No	Affected Sheets	Prepared by Date	Checked by Date	Verified by Date

By: JJB 10/29/01
CHK'D EG 10/30/01

Water Treatment Plant Design Assumptions
New Bedford Harbor Superfund Site – OU#1

Dredging Assumptions

- Two (2) dredges will be utilized under the unlimited funding scenario. A "BEAN Type" dredge will be used to remove sub-tidal sediments and a "Amphibex Type" dredge will be utilized for removal of sediments within the inter-tidal areas.
- One (1) dredge will be utilized under the limited funding scenario. Either a "BEAN Type " or "Amphibex Type" dredge will be utilized for sediment removal.
- A "BEAN Type" dredge system includes a hydraulic excavator, +4 inch (minimum) material separation, and a slurry processing unit.
- The average operating rate for the "BEAN Type" dredge and "Amphibex Type" dredge is 95 in-situ yd^3/hr and 35 in-situ yd^3/hr, respectively.
- The peak operating rate for the "BEAN Type" dredge and the "Amphibex Type" dredge is 150 in-situ yd^3/hr and 60 in-situ yd^3/hr, respectively.
- Dredging operations will be conducted in two 10 hours shifts/day, 6 days/week
- Effective operating time will be 8 hrs/shift per dredge
- Operating time at peak production is 2 hours/shift per dredge.
- Solids content (by weight) of in-situ sediment ranges from 40 to 80% with the average being 45%.
- Dredged material from the "BEAN Type" dredge system will be transferred to the dewatering system at an average solids content of 15% (by weight).
- Dredged material from the "Amphibex Type" dredge system will be transferred to the dewatering system at a solids content of 5 to 15% (by weight).
- Filtrate from the dewatering system will be recycled to the slurry processing unit of the "BEAN Type" dredge.
- Quality of filtrate is acceptable to dredging subcontractor for recycle.

Dewatering Assumptions

- Dredge slurry as received by the dewatering subcontractor will contain an average of 15% solids (by weight).
- Solids material within dredge slurry will be $\leq$ 4 inches.
- Dewatering operations will include coarse material (+ 3/8 inch) and sand (+100 mesh) separation.
- 1% of in-situ dry solids is +3/8 inch and 23% is +100 mesh. (Based on an initial in-situ solids content of 40%).
- Assume for 80% in-situ solids content sediment, +200 mesh material is approximately 1.5 times that of 40% in-situ sediment (i.e., 50%).

By: JJB 10/29/01
Chk'd EG 10/30/01

- Dewatering system will produce a 60% solids (by weight) filter cake.
- Dewatering filtrate will be pumped from the sediment dewatering facility to CDF C (CDF Cell #2) for recycle and/or treatment.
- Filtrate will be pumped in floating pipe to CDF Cell #2.

Water Treatment System Assumptions

- The water treatment system will be designed for an initial treatment capacity of 700 gpm and have the ability to expand 2,000 gpm.
- The WTP will include a chemical addition system (alum and polymer), an inclined plate clarifier, a sand filtration system, a polishing filtration system, and granular activated carbon.
- The existing CDFs (Cells #1, #2, and #3) will be available for the wastewater treatment system.
- The wastewater treatment system will operate 24 hours/day, 7 days/week.
- Underflow from inclined plate clarifier and sand filter backwash water will be transferred to dewatering facility located on the southern lobe of CDF D.
- The PCB concentration in the dewatering system filtrate will be less than 15 ppb (based on Koester Environmental Services, Inc. bench scale dewatering test results).

Summary of Dredge, Dewatering, and Water Treatment Assumptions
New Bedford Harbor Superfund Site – OU#1

Parameter	"BEAN Type" Dredge	"Amphibex Type" Dredge (15%)	"Amphibex Type" Dredge (5%)
Dredge Work Week (Days)	6	6	6
Shifts/Day	2	2	2
Hours/shift	10	10	10
Number of Dredges	1	1	1
Effective Operating Time (Hrs/Day)	16	16	16
Operating Time @ Peak Production (Hrs/Day)	4	4	NA
Peak Operating Rate (in-situ yd^3 /Hr)	150	60	60
Average Operating Rate (in-situ yd^3/Hr)	95	35	35
Daily Dredge Rate (in-situ yd^3)	1,740	660	832
Recycle Water for Slurry Makeup/Transfer(%)	100	0	0
Average % solids (by weight) of In-situ Sediment	45	45	45
Average % Solids (by weight) of Slurry Transferred to Dewatering System	15	15	5
% solids (by weight) of Filter Cake Generated	60	60	60
% solids (by wt) removed (+3/8 in & +100 mesh)	24	24	24
Filtrate Transferred to WTP (Gal/Day)	1,106,640	419,760	1,526,160
Filtrate Requiring Treatment (Gal/Day)	232,560	419,760	1,526,160
WTP Operating Time (Hrs/Day)	24	24	24
Required WTP Capacity (gpm) – 6 days/week	161	291	1,060
Required WTP Capacity (gpm) – 7 days/week	138	250	908

By: JTB 11/24/01
Chk'd EG 10/30/01

MASS BALANCE - BEAN Dredge @ 95 YD^3/HR
New Bedford Harbor Superfund Site - OU#1

CONSTANTS are shown in yellow cells everything else is calculated based on highlighted numbers and percent solids by weight as given from the three different dewatering vendors.

In-Situ Sediment Properties

Solids Content (% by weight) =	45	
Volume of Solids =	0.2393	ft^3
Volume of water =	0.7607	ft^3
Weight of Solids =	39.40	lbs/ft^3
Weight of Water =	48.16	lbs/ft^3
Specific Gravity Sediment =	2.64	

Seawater Properties

Specific Gravity =	1.015	
Density of water @ 60 F =	62.371	lbs/ft^3
	8.3378	lbs/gallon
	7.4805	gallon/ft^3

Dredging

Production Rate =	95	in-situ yd^3/hour
Assumed excavation bucket is	75%	effective. (I.e., 25% of each bucket volume is excess seawater)
Total volume removed =	127	yd^3/hour
Volume of excess seawater =	32	yd^3/hour
Volume of excess seawater =	107	gpm

Diaphragm Plate and Frame Filter Press

	Stream	% solids	Solids (tons/hr)	Solids Volume (yd^3/hr)	Water Volume (yd^3/hr)	Total Volume (yd^3/hr)	Total Weight (tons/hr)	Water (gpm)
From Dredge	1	45	51	23	72	95	112	243
Excess water in bucket	1A	0	0	0	32	32		107
Total from dredge	**Total 1**	**45**	**51**	**23**	**104**	**127**	**112**	**350**
Out SPU	2	15	51	23	335	358	337	1128
Recycled in to SPU	3	0	0	0		0		778
Out sand separation	4	12.02	38.40	17.28	328.98	346	320	1107
plus 3/8 mesh	5	70	0.51	0.227	0.253	0.481	0.72	0.87
plus 100 mesh	6	70	12	5.23	5.83	11.06	16.60	19.62
Filter Cake	7	60	38	17	30	47	64	101
Filtrate to water treatment	9	0	0	0				1007
Recycling from press to SPU	8	0	0	0		0		778
Polymer addition	11							
Filtrate to treatment	10	0	0	0		0		229

By: JJB 10/29/01
Chk'd EG 10/30/01

Dredging/Dewatering Mass Balance
BEAN Type Dredge @ 95 yd^3/hr
15% solids (by weight) Slurry
45% in-situ solids (by weight)

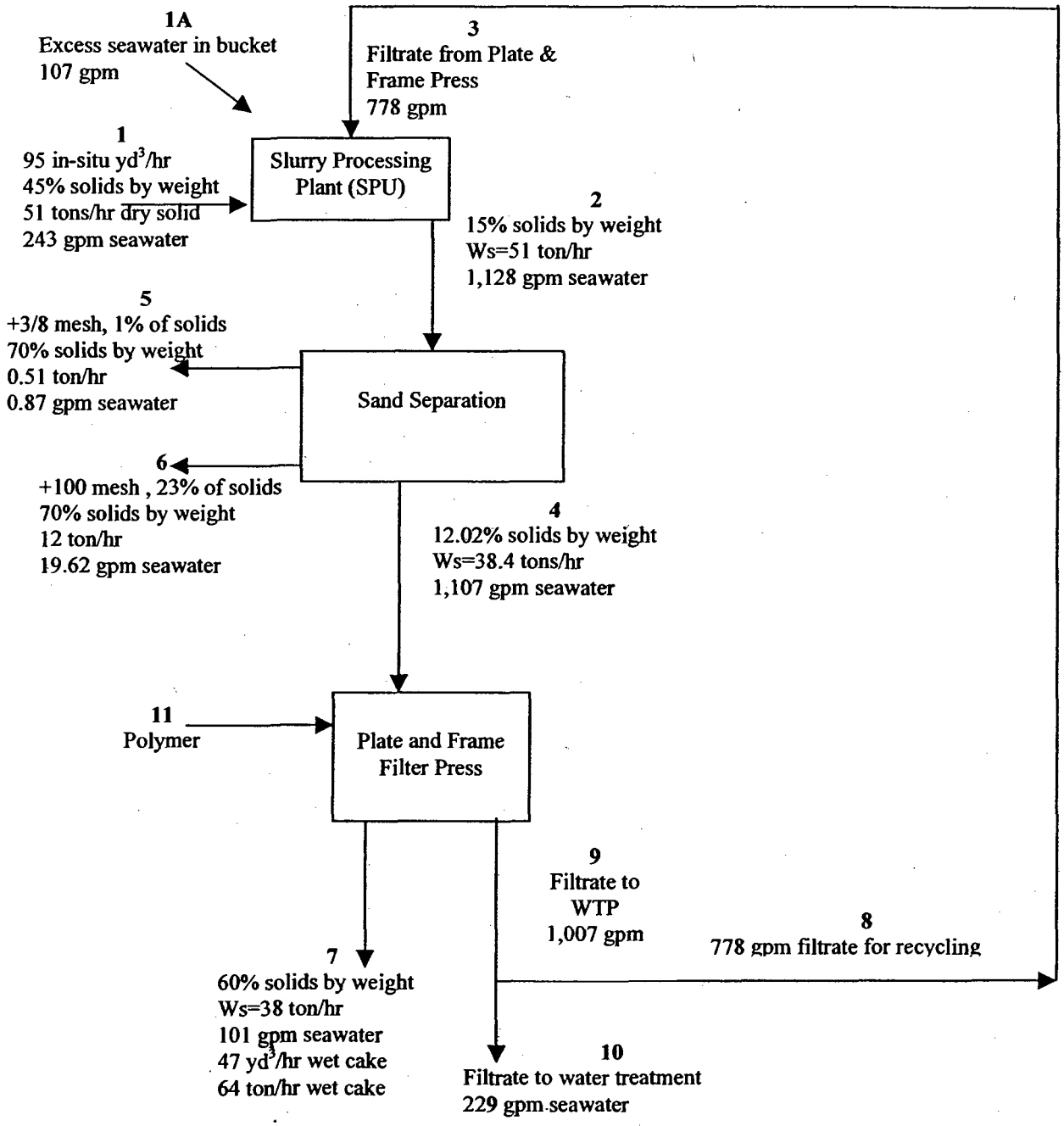

By: JJB 10/29/01
Chk'd EG 10/30/01

MASS BALANCE - BEAN Dredge @ 150 YD^3/HR
New Bedford Harbor Superfund Site - OU#1

CONSTANTS are shown in yellow cells everything else is calculated based on highlighted numbers and percent solids by weight as given from the three different dewatering vendors.

In-Situ Sediment Properties

Solids Content (% by weight) =	45	
Volume of Solids =	0.2393	ft^3
Volume of water =	0.7607	ft^3
Weight of Solids =	39.40	lbs/ft^3
Weight of Water =	48.16	lbs/ft^3
Specific Gravity Sediment =	2.64	

Seawater Properties

Specific Gravity =	1.015	
Density of water @ 60 F =	62.371	lbs/ft^3
	8.3375	lbs/gallon
	7.4805	gallon/ft^3

Dredging

Production Rate =	150	in-situ yd^3/hour
Assumed excavation bucket is	85%	effective. (I.e., 25% of each bucket volume is excess seawater)
Total volume removed =	176	yd^3/hour
Volume of excess seawater =	26	yd^3/hour
Volume of excess seawater =	89	gpm

Diaphragm Plate and Frame Filter Press

	Stream	% solids	Solids (tons/hr)	Solids Volume (yd^3/hr)	Water Volume (yd^3/hr)	Total Volume (yd^3/hr)	Total Weight (tons/hr)	Water (gpm)
From Dredge	1	45	80	36	114	150	177	384
Excess water in bucket	1A	0	0	0	26	26		89
Total from dredge	**Total 1**	**45**	**80**	**36**	**141**	**176**	**177**	**473**
Out SPU	2	15	80	36	529	565	532	1781
Recycled in to SPU	3	0	0	0		0		1308
Out sand separation	4	12.02	60.64	27.28	519.43	547	505	1749
plus 3/8 mesh	5	70	0.80	0.359	0.400	0.759	1.14	1.37
plus 100 mesh	6	70	18	8.26	9.20	17.46	26.22	30.98
Filter Cake	7	60	61	27	47	75	101	159
Filtrate to WTP	9							1589
Recycling from press to SPU	8	0	0	0		0		1308
Polymer addition	11							
Filtrate to treatment	10	0	0	0		0		282

By: JJB 10/29/01
Chk'd EG 10/30/01

Dredging/Dewatering Mass Balance
BEAN Type Dredge @ 150 yd^3/hr
15% solids (by weight) Slurry
45% in-situ solids (by weight)

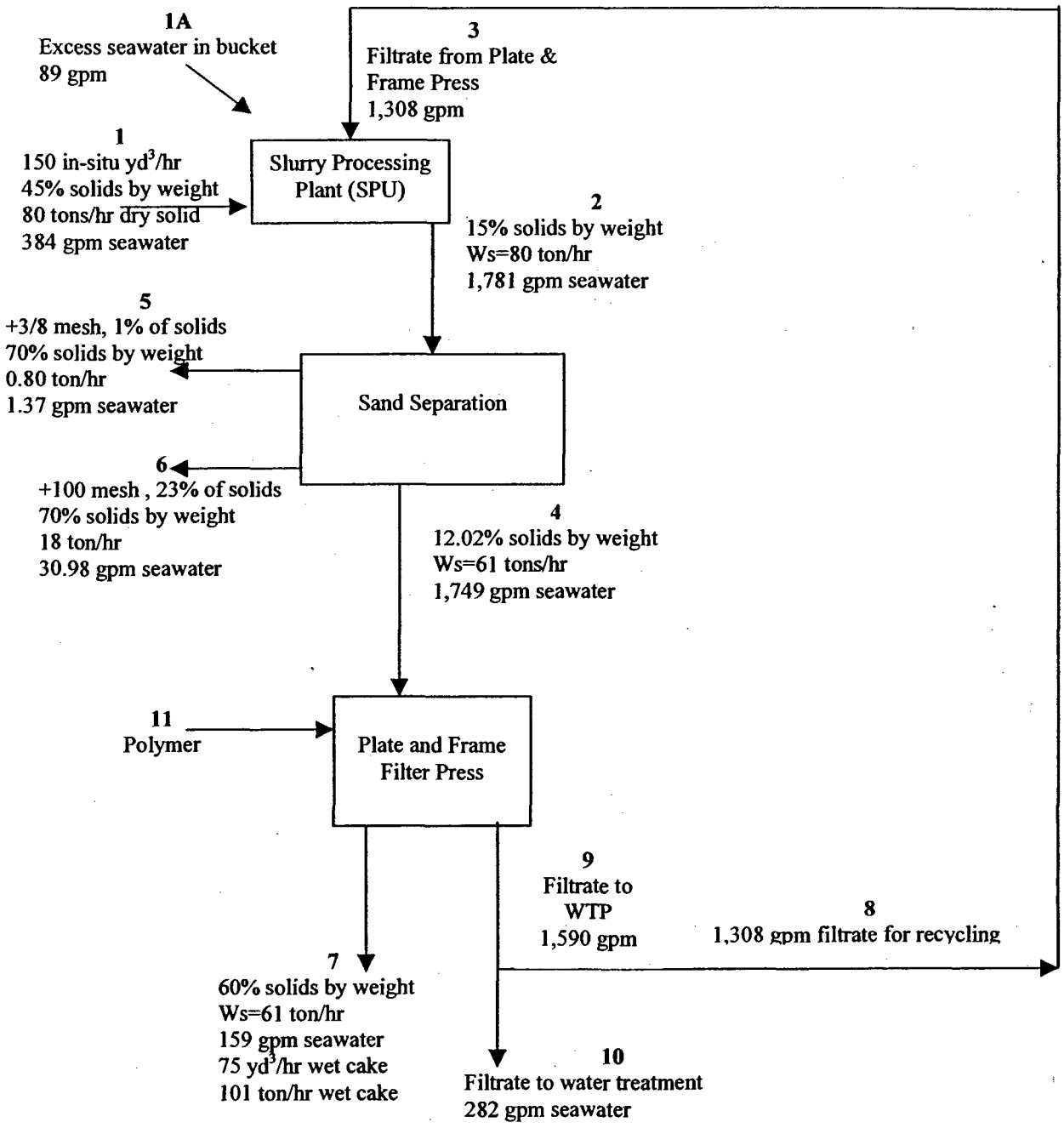

By: JJB 10/29/01
Chk'd EG 10/30/01

MASS BALANCE - Amphibex Dredge @ 35 YD^3/HR
New Bedford Harbor Superfund Site - OU#1

CONSTANTS are shown in yellow cells everything else is calculated based on highlighted numbers and percent solids by weight as given from the three different dewatering vendors.

In-Situ Sediment Properties

Solids Content (% by weight) =	45	
Volume of Solids =	0.2393	ft^3
Volume of water =	0.7607	ft^3
Weight of Solids =	39.40	lbs/ft^3
Weight of Water =	48.16	lbs/ft^3
Specific Gravity Sediment =	2.64	

Seawater Properties

Specific Gravity =	1.015	
Density of water @ 60 F =	62.371	lbs/ft^3
	8.3378	lbs/gallon
	7.4805	gallon/ft^3

Dredging

Production Rate =	35	in-situ yd^3/hour
Assumed excavation bucket is	100%	effective. (I.e., 25% of each bucket volume is excess seawater)
Total volume removed =	35	yd^3/hour
Volume of excess seawater =	0	yd^3/hour
Volume of excess seawater =	0	gpm

Diaphragm Plate and Frame Filter Press

	Stream	% solids	Solids (tons/hr)	Solids Volume (yd^3/hr)	Water Volume (yd^3/hr)	Total Volume (yd^3/hr)	Total Weight (tons/hr)	Water (gpm)
From Dredge	1	45	19	8	27	35	41	90
Excess water in bucket	1A	0	0	0	0	0		0
Total from dredge	**Total 1**	**45**	**19**	**8**	**27**	**35**	**41**	**90**
Out SPU	2	15	19	8	123	132	124	416
Recycled in to SPU	3	0	0	0		0		0
Out sand separation	4	12.02	14.15	6.37	121.20	128	118	408
plus 3/8 mesh	5	70	0.19	0.084	0.093	0.177	0.27	0.32
plus 100 mesh	6	70	4	1.93	2.15	4.07	6.12	7.23
Filter Cake	7	60	14	6	11	17	24	37
Recycling from press to SPU	8	0	0	0		0		0
Polymer addition	9							
Filtrate to treatment	10	0	0	0		0		371

By: JJB 10/29/01
Chk'd 10/30/01

Dredging/Dewatering Mass Balance
Amphibex Type Dredge @ 35 yd^3/hr
15% Solids (by weight) Slurry
45% in-situ solids (by weight)

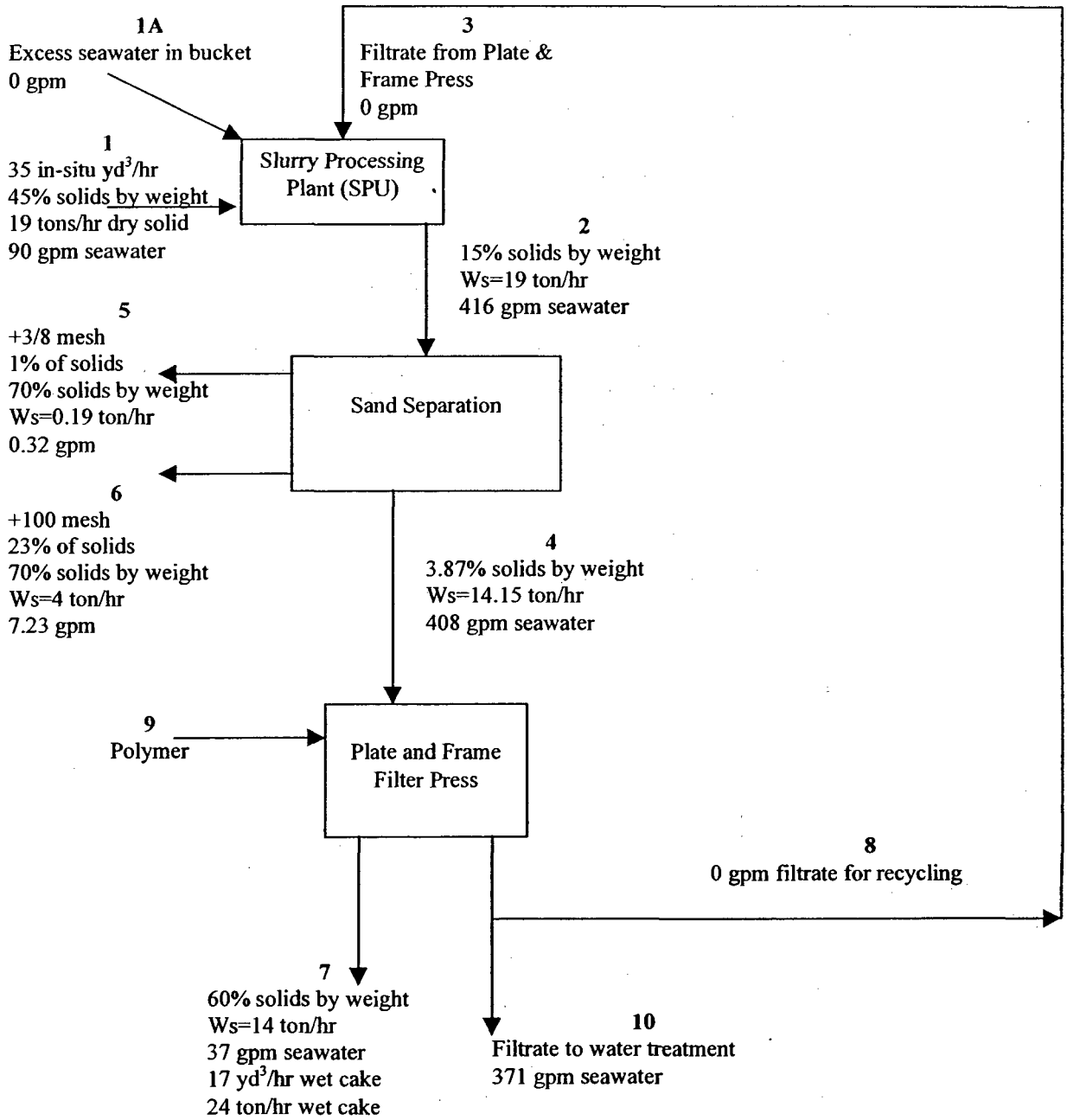

By: JJB 10/29/01
Chk'd EG 10/30/01

MASS BALANCE - Amphibex Dredge @ 60 YD^3/HR
New Bedford Harbor Superfund Site - OU#1

CONSTANTS are shown in yellow cells everything else is calculated based on highlighted numbers and percent solids by weight as given from the three different dewatering vendors.

In-Situ Sediment Properties

Solids Content (% by weight) =	45	
Volume of Solids =	0.2393	ft^3
Volume of water =	0.7607	ft^3
Weight of Solids =	39.40	lbs/ft^3
Weight of Water =	48.16	lbs/ft^3
Specific Gravity Sediment =	2.64	

Seawater Properties

Specific Gravity =	1.015	
Density of water @ 60 F =	62.371	lbs/ft^3
	8.3378	lbs/gallon
	7.4805	gallon/ft^3

Dredging

Production Rate =	60	in-situ yd^3/hour
Assumed excavation bucket is	100%	effective. (I.e., 25% of each bucket volume is excess seawater)
Total volume removed =	60	yd^3/hour
Volume of excess seawater =	0	yd^3/hour
Volume of excess seawater =	0	gpm

Diaphragm Plate and Frame Filter Press

	Stream	% solids	Solids (tons/hr)	Solids Volume (yd^3/hr)	Water Volume (yd^3/hr)	Total Volume (yd^3/hr)	Total Weight (tons/hr)	Water (gpm)
From Dredge	1	45	32	14	46	60	71	154
Excess water in bucket	1A	0	0	0	0	0		0
Total from dredge	**Total 1**	**45**	**32**	**14**	**46**	**60**	**71**	**154**
Out SPU	2	15	32	14	212	226	213	712
Recycled in to SPU	3	0	0	0		0		0
Out sand separation	4	12.02	24.26	10.91	207.77	219	202	699
plus 3/8 mesh	5	70	0.32	0.144	0.160	0.304	0.46	0.55
plus 100 mesh	6	70	7	3.30	3.68	6.98	10.49	12.39
Filter Cake	7	60	24	11	19	30	40	64
Recycling from press to SPU	8	0	0	0		0		0
Polymer addition	9							
Filtrate to treatment	10	0	0	0		0		636

By: JJB 10/29/01
Chk'd EG 10/30/01

Dredging/Dewatering Mass Balance
Amphibex Type Dredge @ 60 yd^3/hr
15% Solids (by weight) Slurry
45% in-situ solids (by weight)

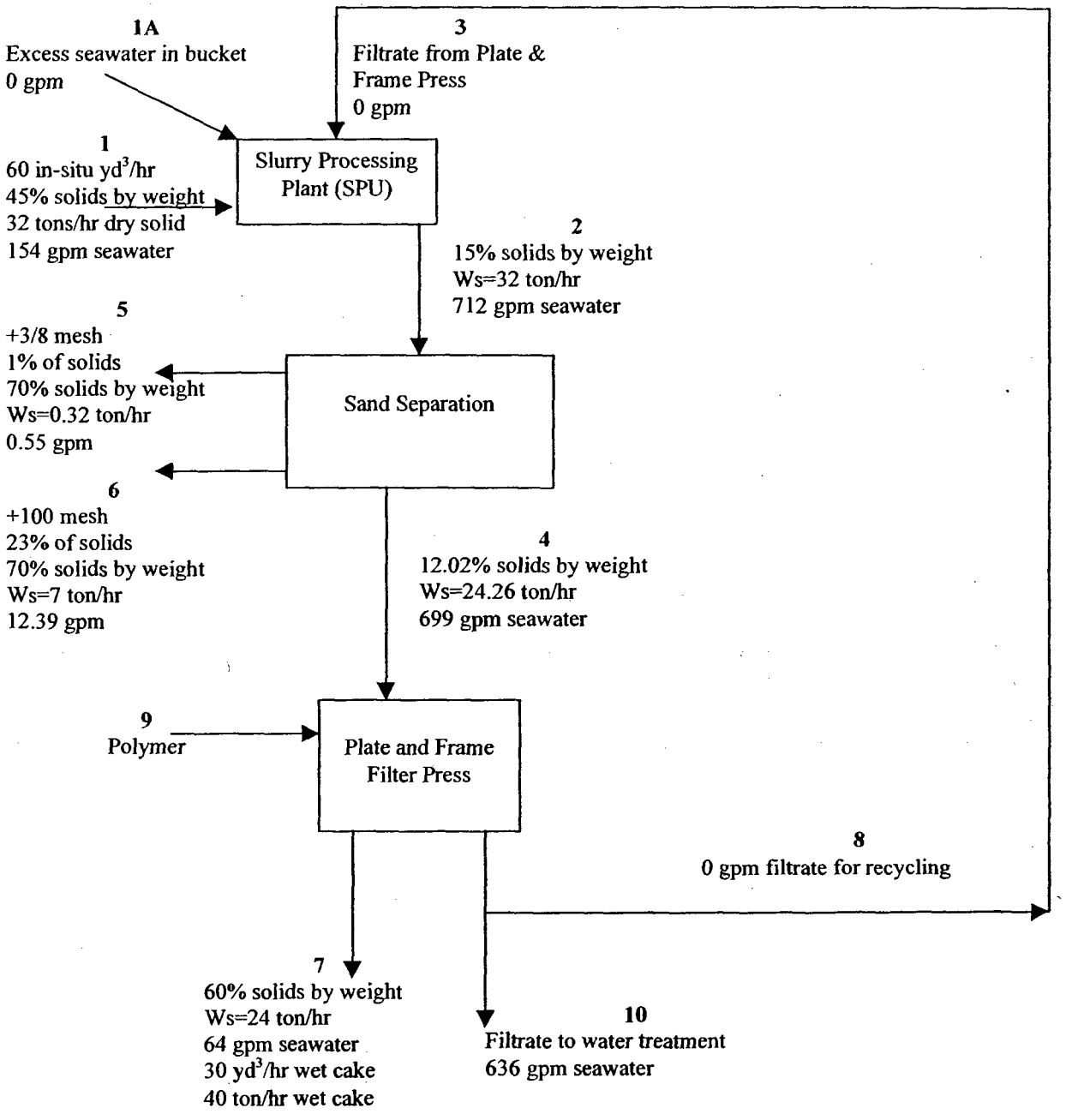

By: JJB 10/29/01
Chk'd EG 10/30/01

MASS BALANCE - Amphibex Dredge @ 35 YD^3/HR
New Bedford Harbor Superfund Site - OU#1

CONSTANTS are shown in yellow cells everything else is calculated based on highlighted numbers and percent solids by weight as given from the three different dewatering vendors.

In-Situ Sediment Properties

Solids Content (% by weight) =	45	
Volume of Solids =	0.2393	ft^3
Volume of water =	0.7607	ft^3
Weight of Solids =	39.40	lbs/ft^3
Weight of Water =	48.16	lbs/ft^3
Specific Gravity Sediment =	2.64	

Seawater Properties

Specific Gravity =	1.015	
Density of water @ 60 F =	62.371	lbs/ft^3
	8.3378	lbs/gallon
	7.4805	gallon/ft^3

Dredging

Production Rate =	35	in-situ yd^3/hour
Assumed excavation bucket is	100%	effective. (I.e., 25% of each bucket volume is excess seawater)
Total volume removed =	35	yd^3/hour
Volume of excess seawater =	0	yd^3/hour
Volume of excess seawater =	0	gpm

Diaphragm Plate and Frame Filter Press

	Stream	% solids	Solids (tons/hr)	Solids Volume (yd^3/hr)	Water Volume (yd^3/hr)	Total Volume (yd^3/hr)	Total Weight (tons/hr)	Water (gpm)
From Dredge	1	45	19	8	27	35	41	90
Excess water in bucket	1A	0	0	0	0	0		0
Total from dredge	**Total 1**	**45**	**19**	**8**	**27**	**35**	**41**	**90**
Out SPU	2	5	19	8	414	422	372	1393
Recycled in to SPU	3	0	0	0		0		0
Out sand separation	4	3.87	14.15	6.37	411.65	418	366	1386
plus 3/8 mesh	5	70	0.19	0.084	0.093	0.177	0.27	0.32
plus 100 mesh	6	70	4	1.93	2.15	4.07	6.12	7.23
Filter Cake	7	60	14	6	11	17	24	37
Recycling from press to SPU	8	0	0	0		0		0
Polymer addition	9							
Filtrate to treatment	10	0	0	0		0		1349

By: JJB 10/29/01
Chkd EG 10/30/01

Dredging/Dewatering Mass Balance
Amphibex Type Dredge @ 35 yd^3/hr
5% Solids (by weight) Slurry
45% in-situ solids (by weight)

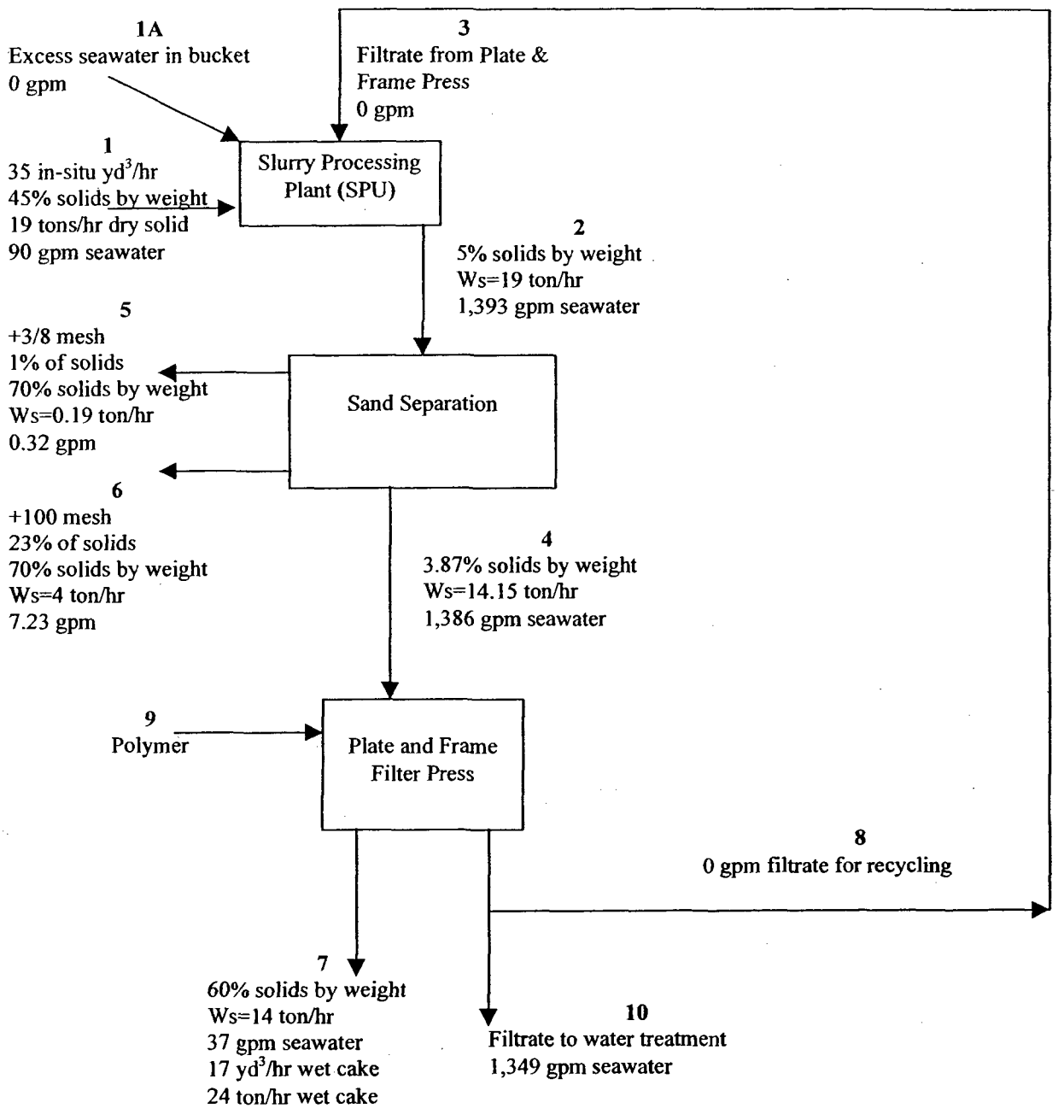

By: JJB 10/29/01

Chkd EG 10/30/01

MASS BALANCE - Amphibex Dredge @ 60 YD^3/HR
New Bedford Harbor Superfund Site - OU#1

CONSTANTS are shown in yellow cells everything else is calculated based on highlighted numbers and percent solids by weight as given from the three different dewatering vendors.

In-Situ Sediment Properties

Solids Content (% by weight) =	45	
Volume of Solids =	0.2393	ft^3
Volume of water =	0.7607	ft^3
Weight of Solids =	39.40	lbs/ft^3
Weight of Water =	48.16	lbs/ft^3
Specific Gravity Sediment =	2.64	

Seawater Properties

Specific Gravity =	1.015	
Density of water @ 60 F =	62.371	lbs/ft^3
	8.3378	lbs/gallon
	7.4805	gallon/ft^3

Dredging

Production Rate =	60	in-situ yd^3/hour
Assumed excavation bucket is	100%	effective. (I.e., 25% of each bucket volume is excess seawater)
Total volume removed =	60	yd^3/hour
Volume of excess seawater =	0	yd^3/hour
Volume of excess seawater =	0	gpm

Diaphragm Plate and Frame Filter Press

	Stream	% solids	Solids (tons/hr)	Solids Volume (yd^3/hr)	Water Volume (yd^3/hr)	Total Volume (yd^3/hr)	Total Weight (tons/hr)	Water (gpm)
From Dredge	1	45	32	14	46	60	71	154
Excess water in bucket	1A	0	0	0	0	0		0
Total from dredge	**Total 1**	**45**	**32**	**14**	**46**	**60**	**71**	**154**
Out SPU	2	5	32	14	710	724	638	2388
Recycled in to SPU	3	0	0	0		0		0
Out sand separation	4	3.87	24.26	10.91	705.69	717	627	2376
plus 3/8 mesh	5	70	0.32	0.144	0.160	0.304	0.46	0.55
plus 100 mesh	6	70	7	3.30	3.68	6.98	10.49	12.39
Filter Cake	7	60	24	11	19	30	40	64
Recycling from press to SPU	8	0	0	0		0		0
Polymer addition	9							
Filtrate to treatment	10	0	0	0		0		2312

By: JJB 10/29/01
Chk'd EG 10/30/01

Dredging/Dewatering Mass Balance
Amphibex Type Dredge @ 60 yd^3/hr
5% Solids (by weight) Slurry
45% in-situ solids (by weight)

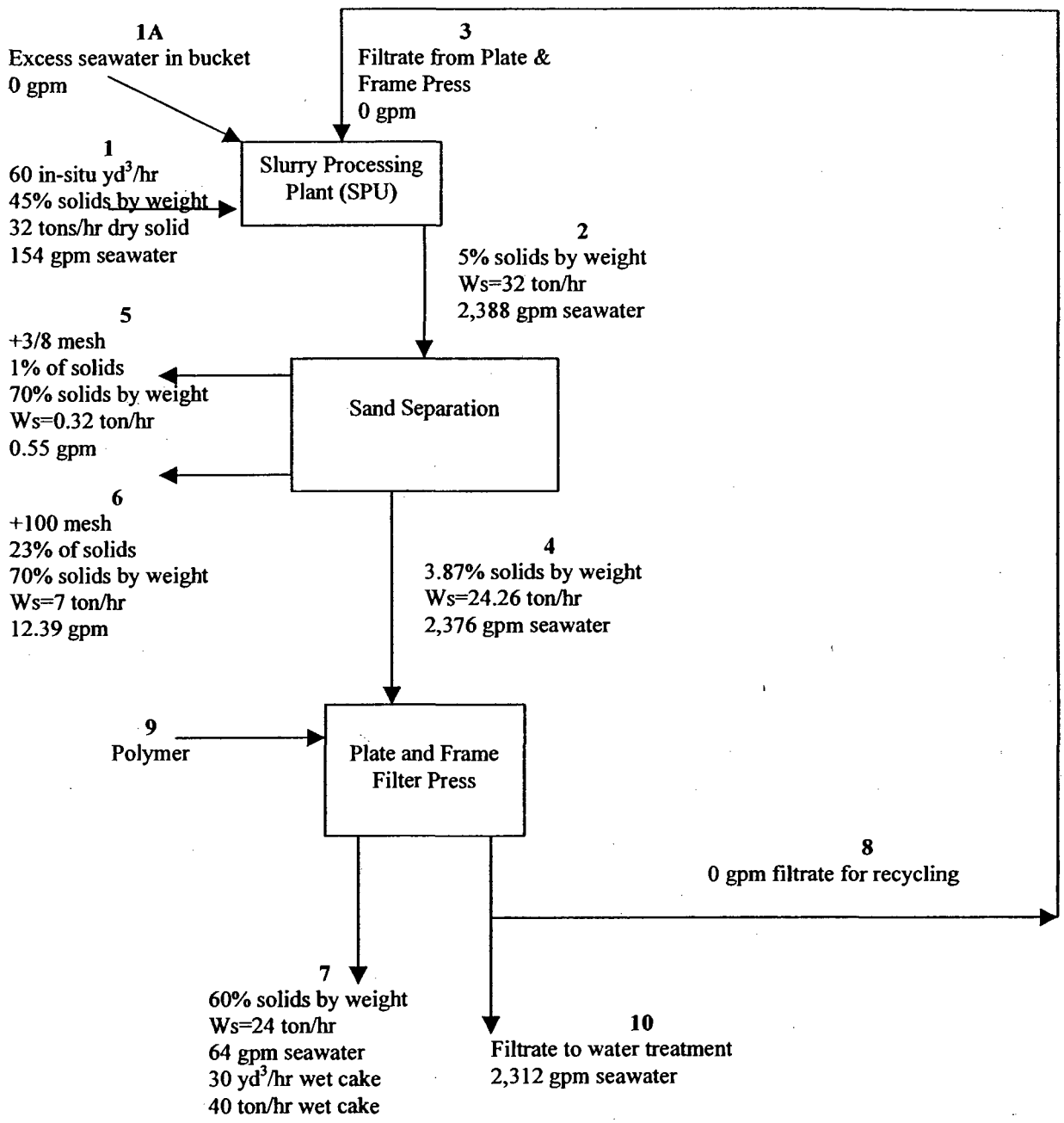

FORM 6906-5

FOSTER WHEELER

By: JJB 10/29/01
Chk'd EG 10/30/01

IN-SITU SEDIMENT PROPERTIES

$$V_T = V_S + V_W$$

$$W_T = W_S + W_W$$

WHERE:

V_T = TOTAL VOLUME
V_S = VOLUME OF SOLIDS
V_W = VOLUME OF WATER

W_T = TOTAL WEIGHT
W_S = WEIGHT OF SOLIDS
W_W = WEIGHT OF WATER

$$\% \text{ SOLIDS (by WEIGHT)} = \frac{W_S}{W_T} = \frac{W_S}{W_S + W_W}$$

$$W_S = V_S \rho_S = V_S (S.G.)_S \, \rho_{H_2O @ 60°F}$$

$$W_W = V_W \rho_W = V_W (S.G.)_W \, \rho_{H_2O @ 60°F}$$

WHERE:

ρ_S = DENSITY OF SOLIDS = $2.64 \, \rho_{H_2O @ 60°F}$
ρ_W = DENSITY OF SEAWATER = $\rho_{H_2O @ 60°F} \, S.G._{SEAWATER} = 1.015 \, \rho_{H_2O @ 60°F}$
S.G. = SPECIFIC GRAVITY
$\rho_{H_2O @ 60°F}$ = DENSITY OF WATER @ 60°F = 62.371 lbs/FT^3

$\therefore$

$$\% \text{ SOLIDS (by WEIGHT)} = \frac{V_S \rho_S}{(V_S \rho_S) + (V_W \rho_W)} = X_S$$

$$V_W = 1 - V_S$$

FORM 6906-5

FOSTER WHEELER

By: JJB 10/29/01
Chkd EB 10/30/01

$$X_s = \frac{164.6594\,V_s}{164.6594\,V_s + 63.3066 - 63.3066\,V_s}$$

$$= \frac{164.6594\,V_s}{101.3528\,V_s + 63.3066}$$

$$X_s(101.3528\,V_s + 63.3066) = 164.6594\,V_s$$

$$101.3528\,V_s X_s + 63.3066\,X_s = 164.6594\,V_s$$

$$63.3066\,X_s = 164.6594\,V_s - 101.3528\,V_s X_s$$

$$V_s = \frac{63.3066\,X_s}{164.6594 - 101.3528\,X_s}$$

THEREFORE:

FOR A 45% IN-SITU SOLIDS CONTENT

$$V_s = \frac{63.3066(.45)}{164.6594 - (101.3528)(.45)} = 0.2393 \ FT^3/FT^3$$

$$V_w = 1 - V_s = 1 - 0.2393 = 0.7607 \ FT^3/FT^3$$

$$w_s = (0.2393\ FT^3/FT^3)(2.64)(62.371\ lbs/FT^3)(1\ FT^3) = 39.40\ lbs/FT^3 \text{ IN SITU SEDIMENT}$$

$$w_w = (0.7607\ FT^3/FT^3)(1.015)(62.371\ lbs/FT^3)(1\ FT^3) = 48.16\ lbs/FT^3 \text{ IN SITU SEDIMENT}$$

FORM 6906-5

FOSTER WHEELER

By: JJB 10/29/01
Chk'd EG 10/30/01

DREDGE/DEWATERING MASS BALANCE CALCULATIONS

ASSUME: BEAN TYPE DREDGE WITH A PRODUCTION RATE OF 95 IN-SITU yd^3/hr
45% SOLIDS CONTENT (by WEIGHT)

STREAM #1 - IN SITU SEDIMENTS

% SOLIDS (by WEIGHT) = 45%

DRY SOLIDS (TONS/hr) = $95\ yd^3/hr\ (27\ ft^3/yd^3)(39.4\ lbs/ft^3)\left(\frac{1\ TON}{2000\ lbs}\right) = 50.53\ TONS/H$

VOLUME OF SOLIDS $= 50.53\ TONS/hr\ (2000\ lbs/TON)\left(\frac{1}{(2.64)(62.371\ lbs/ft^3)}\right)\left(\frac{1\ yd^3}{27\ ft^3}\right)$

$= 22.73\ yd^3/hr$

VOLUME OF WATER $= 95 - 22.37 = 72.27\ yd^3/h$

TOTAL WEIGHT $= \frac{50.53\ TONS/hr}{0.45} = 112.29\ TONS/hr$

STREAM #1A - EXCESS SEAWATER IN BUCKET

ASSUME EXCAVATION IS 75% EFFECTIVE (i.e., 25% OF EACH BUCKET IS EXCESS SEAWATER)

TOTAL VOLUME REMOVED PER HOUR $= \frac{95\ yd^3/h}{.75} = 126.67\ yd^3/h$

VOLUME OF EXCESS SEAWATER $= 126.67\ yd^3/hr - 95\ yd^3/h = 31.67\ yd^3/h$

$= 106.6$ gpm

FORM 6906-5

FOSTER WHEELER

By JJB 10/29/01
Chk'd EG 10/30/01

STREAM #2 - SLURRY PROCESSING UNIT (SPU) DISCHARGE

ASSUME: % SOLIDS OF DISCHARGE SLURRY = 15% (by WEIGHT)
WEIGHT OF SCREENED MATERIAL (+4") IS NEGLIGIBLE)

WEIGHT OF DRY SOLIDS = 50.53 TONS/hr
VOLUME OF DRY SOLIDS = 22.37 yd³/hr

TOTAL WEIGHT = 50.53 TONS/hr $\left(\frac{1}{0.15}\right)$ = 336.87 TONS/hr

WEIGHT OF WATER = 336.87 TONS/hr − 50.53 TONS/hr = 286.34 TONS/hr

VOLUME OF WATER = $\left(286.34 \frac{\text{TONS}}{\text{hr}}\right)\left(2000 \frac{\text{lbs}}{\text{TON}}\right)\left(\frac{1}{(1.015)(62.371 \text{ lb/ft}^3)}\right)\left(7.4805 \frac{\text{gal}}{\text{ft}^3}\right)$

= 67,668.86 gal/hr

= 1,127.8 gpm

STREAM #3 - RECYCLE WATER TO SPU

STREAM #2 − STREAM #1 = 1,127.8 gpm − (244.49 + 106.6)

= 776.7 gpm

STREAM #5 +3/8 INCH MATERIAL REMOVAL

ASSUME: 1% OF DRY SOLIDS ARE +3/8" (BASED ON DEWATERING BENCH TEST RESULTS)
SEPARATED MATERIAL CONTAINS 30% (by WEIGHT) WATER
100% OF 3/8" MATERIAL IS REMOVED

+3/8" MATERIAL = (50.53 TONS/hr)(0.01) = 0.51 TONS/hr

WATER = (0.51 TONS/hr)$\left(\frac{1}{.7}\right)$(0.3) = 0.22 TONS/hr

= (0.22 TONS/hr)(2000 lbs/TON)$\left(\frac{1}{8.3378 \text{ lbs/gal} \times 1.015}\right)\left(\frac{1 \text{ hr}}{60 \text{ m}}\right)$ = 0.87 gpm

FORM 6906-5

FOSTER WHEELER

Prep: JJB 10/29/01
Chk'd EG 10/30/01

STREAM #6 +100 MESH MATERIAL REMOVAL

ASSUME: 23% OF DRY SOLIDS ARE +100 MESH (BASED ON DEWATERING BENCH TEST RESULTS)
SAND SEPARATION IS 100% EFFICIENT
SEPARATED MATERIAL CONTAINS 70% SOLIDS

+100 MESH MATERIAL = 50.53 TONS/HR (.23) = 11.6 TONS/HR

WATER = (11.6 TONS/HR)(1/.7)(.3) = 4.98 TONS/HR

(4.98 TONS/HR)(2000 lbs/TON)(1/(8.3375 lbs/gal (1.015)))(1 HR/60 MIN) = 19.61 gpm

STREAM #4 - SAND SEPARATION SYSTEM EFFLUENT

DRY SOLIDS = 50.53 TONS/HR - 0.51 TONS/HR - 11.6 TONS/HR = 38.42 TONS/HR

(0.51: +3/8"; 11.6: +100 MESH)

WATER = STREAM #2 - (STREAM #5 + STREAM #6)

= 1,127.8 gpm - (0.87 gpm + 19.61 gpm) = 1,107.32 gpm

STREAM #7 FILTER CAKE

ASSUME 60% SOLIDS (by WEIGHT)

DRY SOLIDS = 38.42 TONS/HR

WET FILTER CAKE = (38.42 T/HR)(1/.6) = 64. TONS/HR FILTER CAKE

WATER = (64 TON/HR)(.4)(2000 lbs/TON)(1/(8.3375 gal/FT³)(1.015))(1 hr/60 min) = 100.88 gpm

TOTAL VOLUME = [(38.42 TONS/HR)(2000 lbs/TON)(1/((62.371)(2.64)))(1 yd³/27 FT³)] + [(100.88 gpm)(60 MIN/HR)(1/(7.48052 gal/FT³))(1 yd³/27 FT³)] = 47.25 yd³/hr

By: JJB 10/29/01
Chk'd GG 10/30/01
FORM 6906-5

FOSTER WHEELER

STREAM # 9 - FILTRATE TRANSFERRED TO WTP

STREAM #4 - STREAM # 7

= 1,107.32 gpm - 100.86 gpm = 1,006.46 gpm

STREAM # 10 - WATER REQUIRING TREATMENT

STREAM # 9 - STREAM # 3

= 1006.46 gpm - 776.7 gpm = 229.74 gpm

REQUIRED WTP TREATMENT CAPACITY FOR "BEAN TYPE" DREDGE

FILTRATE FLOW RATE FROM MECHANICAL DEWATERING SYSTEM (GALS/DAY) =

$$(1{,}007\ \text{gpm})(60\ \tfrac{\text{min}}{\text{hr}})(12\ \text{hrs/day}) + (1{,}590\ \text{gpm})(60\ \tfrac{\text{min}}{\text{hr}})(4\ \text{hrs/day})$$

FROM DREDGE MASS BALANCE (95 yd³/hr) — EFFECTIVE OPERATING TIME @ AVG RATE (6 HRS/SHIFT) — FROM DREDGE MASS BALANCE (150 yd³/hr) — EFFECTIVE OPERATING TIME @ PEAK RATE (2 HRS/SHIFT)

= 1,106,640 gal/DAY

= 6,639,840 gal/week assuming dredge operates 6 days/week

FILTRATE RECYCLED TO "BEAN TYPE" DREDGE (GAL/DAY) =

$$(778\ \text{gpm})(60\ \tfrac{\text{min}}{\text{hr}})(12\ \text{hrs/day}) + (1{,}308\ \text{gpm})(60\ \tfrac{\text{min}}{\text{hr}})(4\ \text{hrs/day})$$

= 874,080 gal/day

= 5,244,480 gal/week

FILTRATE REQUIRING TREATMENT = FILTRATE GENERATED − FILTRATE RECYCLED

= 6,639,840 gal/wk − 5,244,480 gal/wk

= 1,395,360 gal/week

$$(1{,}395{,}360\ \text{gal/week})\left(\tfrac{1\ \text{wk}}{7\ \text{days}}\right)\left(\tfrac{1\ \text{day}}{24\ \text{hr}}\right)\left(\tfrac{1\ \text{hr}}{60\ \text{min}}\right) = 138.4\ \text{gpm}$$

CALCULATION COVER SHEET

PROJECT New Bedford Harbor Superfund Site OU#1

SUBJECT Water Treatment Plant Mass Balance Calculations

CLIENT U.S. Army Corps of Engineers – New England District (USACE – NED)

CALCULATION NO. P-02 PROJECT NO. 5197.1720.3392

NO OF SHEETS 18 DESIGN LEVEL _____

CALCULATION BY OTHERS _____ YES X NO

PREPARER J. Brinkman

REVIEWED BY [illegible] DATE 10-30-01

ASSUMPTIONS THAT REQUIRE CONFIRMATION _____ YES _____ NO

ASSUMPTIONS CONFIRMED BY _____ DATE _____

PRINT NAME, DATE AND INITIAL

Rev No	Affected Sheets	Prepared by Date	Checked by Date	Verified by Date

By: JJB 10/29/01
FORM 6906-5
Chk'd EG 10/30/01

FOSTER WHEELER

ASSUMPTIONS:

- FLOWRATE WILL RANGE FROM 700 gpm to 2,000 gpm
- REMOVAL EFFICIENCIES BASED ON PERFORMANCE DATA GENERATED DURING PILOT TEST (SEPT 2000)
- ALL POLYMER AND ALUM ARE REMOVED IN CLARIFIER UNDERFLOW
- TURBIDITY DATA USED TO DETERMINE TOTAL SUSPENDED SOLIDS (TSS) REMOVAL EFFICIENCY.

REMOVAL EFFICIENCIES FOR EACH UNIT OPERATION BASED ON THE PILOT TEST RESULTS ARE PRESENTED BELOW:

PARAMETER	INCLINED PLATE CLARIFIER	CDF CELL #3	SAND FILTER	GAC
TSS	56.5%	77.1%	41.0%	32.2%
PCBs	14.2%	79.1%	25.4%	>94.7%
TOTAL COPPER	49.6%	8.0%	—	>80.0%

Rev: WD 10/29/01
Chk'd GB 10/30/01

>10

Summary of Pilot-Scale Treatment Results
Average Turbidity, PCBs, and Copper Concentrations

Stream #	Unit Operations/Process	Turbidity (NTU)	Total PCBs (mg/l)	Dissolved Copper (mg/l)	Total Copper (mg/l)
1	Clarifier Influent	10.04[1]	7.03[3]	10.48[3]	18.64[3]
2	Clarifier Effluent/CDF Cell #3 Influent	4.37[1]	6.03[3]	7.37[3]	9.40[3]
3	CDF Cell #3 Effluent/Sand Filtration Influent	1.00[1]	1.26[3]	7.87[3]	8.65[3]
4	Sand Filtration Effluent/GAC Influent	0.59[1]	0.94[3]	16.43[3]	14.98[3]
5	GAC Midpoint	NM	<0.05[4]	<3.0[4]	4.40[4]
6	GAC Effluent	0.40[2]	<0.05[4]	<3.0[4]	<3.0[4]

Notes:

1 Data collected from 9/5/00 to 9/29/00 (refer to Tables D-1 and D-2)
2 Data collected from 9/14/00 to 9/24/00 (refer to Table D-1)
3 Data collected from 9/14/00 to 9/29/00 (refer to Tables B-1 and B-2)
4 Data collected from 9/14/00 to 9/19/00 (refer to Table B-1)

Rq: JJB 10/25/01
Ck'd CG 10/30/01

Wastewater Treatment Plant Mass Balance Calculation

	Clarifier Influent 1	Clarifier Effluent 2	Cell #3 Effluent 3	Sand Filter Effluent 4	Polishing Filter Effluent 5	GAC Effluent 6	Algaecide System 7	Alum Feed System 8	Polymer Feed System 9	Clarifier Underflow 10	Filter Backwash 12
Design Avg. Flow (gpm)	700	665	665	665	665	665	0.02	0.15	0.27	35	45
Total Suspended Solids (ppm)	15	7	1.49	0.88	0.66	0.60	25	150	2	3,122	9
Mass Flow Rate - Water (lbs/hr)	355,440	337,884	337,884	337,884	337,884	337,884	0	56	140	17,772	22,512
Mass Flow Rate - Solids (lbs/hr)	5	2	0.50	0.29	0.22	0.20	9	53	1	56	0
NTUs*	10	4.37	1.00	0.59	0.44	0.40	-	-	-	-	-
PCBs (ppb) <0.05 ug/l	15.00	12.87	2.69	2.01	1.51	<0.05	-	-	-	26	-
Total Cadmium (ppb) <5.0	<5	<5	<5	<5	<5	<5	-	-	-	<5	-
Total Chromium (ppb) <22.0	<22	<22	<22	<22	<22	<22	-	-	-	<22	-
Total Copper (ppb) <3.0	25	13	12	9	7	2	-	-	-	<3	-
Total Lead (ppb) <5.0	9	<5	<5	<5	<5	<5	-	-	-	<5	-

*NTU's - Nephelometric Turbidity Units
NM - No Measurement

By JJB 10/29/01
Chkd by 10/30/01

Wastewater Treatment Plant Mass Balance Calculation

	Clarifier Influent 1	Clarifier Effluent 2	Cell #3 Effluent 3	Sand Filter Effluent 4	Polishing Filter Effluent 5	GAC Effluent 6	Algaecide System 7	Alum Feed System 8	Polymer Feed System 9	Clarifier Underflow 10	Filter Backwash 12
Design Avg. Flow (gpm)	2000	1901	1901	1901	1901	1901	0.02	0.44	0.78	100	90
Total Suspended Solids (ppm)	15	7	1.49	0.88	0.88	0.60	25	150	2	3,122	13
Mass Flow Rate - Water (lbs/hr)	1,015,544	965,384	965,384	965,384	965,384	965,384	0	160	399	50,777	45,024
Mass Flow Rate - Solids (lbs/hr)	15	6	1.42	0.84	0.84	0.57	25	150	2	161	1
NTUs*	10	4.37	1.00	0.59	0.59	0.40	-	-	-	-	-
PCBs (ppb) <0.05 ug/l	15.00	12.87	2.69	2.01	2.01	<0.05	-	-	-	26	-
Total Cadmium (ppb) <5.0	<5	<5	<5	<5	<5	<5	-	-	-	<5	-
Total Chromium (ppb) <22.0	<22	<22	<22	<22	<22	<22	-	-	-	<22	-
Total Copper (ppb) <3.0	25	13	12	-	-	2	-	-	-	<3	-
Total Lead (ppb) <5.0	9	<5	<5	<5	<5	<5	-	-	-	<5	-

*NTU's - Nephelometric Turbidity Units
NM - No Measurement

5/18

FORM 6906-5

FOSTER WHEELER

By: JB 10/29/01
Chkd GG 10/30/01

ASSUMPTIONS

- FLOW RATE = 700 gpm
- SPECIFIC GRAVITY OF SEAWATER = 1.015
- DENSITY OF WATER @ 60°F = 8.3378 lbs/gal
- INFLUENT CHARACTERISTIC OF FILTRATE ARE:

  PCBs = 15 ppb (µg/l)
  CADMIUM = < 5 ppb
  CHROMIUM = < 22 ppb
  COPPER = 25 ppb
  LEAD = 9 ppb
  TSS = 15 ppm (mg/l)

- REMOVAL EFFICIENCY OF POLISHING FILTER = 25%
- CLARIFIER UNDERFLOW = 5% OF TOTAL FLOW

STREAM #1: CLARIFIER INFLUENT

FLOW RATE = 700 gal/MIN
TSS = 15 mg/l

$$\text{MASS FLOW RATE-WATER} = \left(700\ \frac{gal}{MIN}\right)\left(\frac{60\ MIN}{1\ HR}\right)\left(8.3378\ \frac{lbs}{gal}\right)\left(1.015\right)$$

$$= 355{,}440\ \frac{lbs}{HR}$$

$$\text{MASS FLOW RATE-SOLIDS} = \left(15\ \frac{mg}{l}\right)\left(700\ \frac{gal}{min}\right)\left(\frac{3.785\ l}{gal}\right)\left(\frac{2.20462\times10^{-6}\ lbs}{1\ mg}\right)\left(\frac{60\ min}{1\ HR}\right)$$

$$= 5.3\ lbs/HR$$

By: JJB 10/29/01
FORM 6906-5
Ckd'd EG 10/30/01

FOSTER WHEELER

7/18

STREAM #2: CLARIFIER EFFLUENT

FLOW RATE = CLARIFIER INFLUENT - CLARIFIER UNDERFLOW

$= 700 - [(700)(0.05)] = 665$ gpm

5% OF FLOWRATE

TSS = 15 mg/l - (15 mg/l)(0.565) = 6.5 mg/l

MASS FLOWRATE WATER = $\left(665 \frac{gal}{min}\right)\left(\frac{60 min}{1 hr}\right)\left(8.3378 \frac{lbs}{gal}\right)(1.015) = 337,668$ lbs/hr

MASS FLOW RATE - SOLIDS = $\left(6.5 \frac{mg}{l}\right)\left(665 \frac{gal}{min}\right)\left(\frac{3.785 l}{gal}\right)\left(\frac{2.20462 \times 10^{-6} lbs}{mg}\right)\left(\frac{60 min}{1 hr}\right)$

$= 2.16 \frac{lbs}{hr}$

NTU = 10.04 - [(10.04)(0.565)] = 4.37

PCBs = 15 - [(15)(0.142)] = 12.87 ppb

CADMIUM = BELOW DETECTION LIMIT (5 ppb)

CHROMIUM = BELOW DETECTION LIMIT (22 ppb)

COPPER = (25 ppb) - [(25 ppb)(0.496)] = 12.6 ppb

LEAD = BELOW DETECTION LIMIT (5 ppb) REMOVAL EFFICIENCY AT LEAST 50%

By: JJB 10/29/01
FORM 6906-5
Chk'd EG 10/30/01

FOSTER WHEELER

STREAM #3: CDF CELL #3 EFFLUENT

FLOWRATE = 665 gpm

TSS = 6.5 mg/l − [(6.5 mg/l)(.771)] = 1.49 mg/l

MASS FLOWRATE - WATER = 337,668 lbs/hr

MASS FLOWRATE - SOLIDS = (1.49 mg/l)(665 gal/min)(60 min/hr)(3.785 l/gal)(2.2046 × 10⁻⁶ lb/mg)

= 0.5 lbs/hr

NTU = 4.37 − [(4.37)(0.771)] = 1

PCBs = 12.87 ug/l − [(12.87 ug/l)(0.791)] = 2.69 ug/l

CADMIUM = < 5 ppb

CHROMIUM = <22 ppb

COPPER = 12.6 ug/l − [(12.6 ug/l)(0.08)] = 11.6 ug/l

LEAD = < 5 ppb

STREAM #4: SAND FILTER EFFLUENT

FLOWRATE = 665 gpm

TSS = 1.49 mg/l − [(1.49 mg/l)(0.41)] = 0.88 mg/l

MASS FLOWRATE - H_2O = 337,668 lbs/hr

MASS FLOWRATE - SOLIDS = (0.88 mg/l)(665 gal/min)(60 min/hr)(3.785 l/gal)(2.2046 × 10⁻⁶ lb/mg)

= 0.29 lbs/hr

By: JJB 10/29/01
Chk'd EG 10/30/01

NTU = 1 - [(1)(0.41)] = 0.59

PCBs = 2.69 ug/l - [(2.69 ug/l)(0.254)] = 2.01 ug/l

CADMIUM = < 5 ppb

CHROMIUM = < 22 ppb

COPPER = 11.6 ug/l - [(11.6)(.25)] = 8.7 ppb

LEAD = < 5 ppb

STREAM # 5: POLISHING FILTER EFFLUENT

FLOWRATE = 665 gpm

TSS = 0.88 mg/l - [(0.88 mg/l)(.25)] = 0.66 mg/l

MASS FLOWRATE - H_2O = 337,668 lbs/h

MASS FLOWRATE - SOLIDS = (0.66 mg/l)(665)(60)(3.785)(2.20462 x 10^{-6}) = 0.22 lbs/h

NTU = 0.59 - (0.59)(.25) = 0.44

PCBs = 2.01 ug/l - [(2.01)(.25)] = 1.51 ug/l

CADMIUM = < 5 ppb

CHROMIUM = < 22 ppb

COPPER = 8.7 ppb - [(8.7)(.25)] = 6.52 ppb

LEAD = < 5 ppb

FORM 6906-5

FOSTER WHEELER

By: JJB 10/29/01
Chkd: EG 10/31/01

STREAM #6: GAC EFFLUENT

FLOW RATE = 665 gpm

TSS = 0.88 mg/l − [(0.88)(.322)] = 0.597 mg/l

MASS FLOWRATE − H_2O = 337,668 lbs/h

MASS FLOWRATE − SOLIDS = 0.597 mg/l (665)(60)(3.785)(2.20462×10⁻⁶) = 0.198 lbs/h

NH4 = 0.59 − (0.59)(.322) = 0.4

PCBs = < 0.05 ppb

CADMIUM = < 5 ppb

CHROMIUM = < 22 ppb

Copper = 8.7 ppb − [(8.7)(.8)] = 1.74 ppb

LEAD = < 5 ppb

STREAMS #7, 8 & 9: CHEMICAL ADDITION

SEE CALCULATION #P-11

STREAM #10: CLARIFIER UNDERFLOW

FLOWRATE = 5% OF TOTAL FLOW (ASSUMED) = 700 × 0.05 = 35 gpm

$$TSS = \frac{\text{mg solids}}{\text{volume (l)}} = \frac{\left[\left(5\,\text{lbs/hr} - 2\,\text{lbs/hr}\right) + 53\,\text{lbs/hr} + 1\,\text{lb/hr}\right] \times \left(\frac{1}{60}\right) \times \frac{1\,\text{mg}}{2.20462\times10^{-6}\,\text{lbs}}}{35\,\text{gal/min} \times \frac{1\,\text{l}}{0.264\,\text{gal}}}$$

(2 lbs/hr: SOLIDS; 53 lbs/hr: ALU; 1 lb/hr: POLYMER)

= 3,252 mg/l

Table B1

Pilot - Scale Activated Carbon Treatment Analytical Results

September 14, 2000

Sample		TSS (mg/L)	PCBs (ug/L)	Dissolved				Total			
Location	ID #			Cadmium (ug/L)	Chromium (ug/L)	Copper (ug/L)	Lead (ug/L)	Cadmium (ug/L)	Chromium (ug/L)	Copper (ug/L)	Lead (ug/L)
Clarifier Influent	SP1	29	5.21	NA	NA	NA	NA	NA	NA	21	ND: <5.0
Clarifier Effluent	SP2	20	5.08	NA	NA	NA	NA	NA	NA	16	ND: <5.0
Vortisand Filter Influent	SP3	35	1.14	NA	NA	NA	NA	NA	NA	8.4	ND: <5.0
Vortisand Filter Effluent/ GAC Influent	SP4	36	1.11	NA	NA	NA	NA	NA	NA	17	ND: <5.0
GAC Midpoint	SP6A	25	ND: <0.05	NA	NA	NA	NA	NA	NA	11	ND: <5.0
GAC Effluent	SP7	11	ND: <0.05	NA	NA	NA	NA	NA	NA	ND: <3.0	ND: <5.0
GAC Effluent	SP7 Dup	22	ND: <0.05	NA	NA	NA	NA	NA	NA	ND: <3.0	ND: <5.0

September 15, 2000

Sample		TSS (mg/L)	PCBs (ug/L)	Dissolved				Total			
Location	ID #			Cadmium (ug/L)	Chromium (ug/L)	Copper (ug/L)	Lead (ug/L)	Cadmium (ug/L)	Chromium (ug/L)	Copper (ug/L)	Lead (ug/L)
Clarifier Influent	SP1	42	6.3	NA	NA	NA	NA	NA	NA	18	ND: <5.0
Clarifier Effluent	SP2	71	5.21	NA	NA	NA	NA	NA	NA	6.4	ND: <5.0
Vortisand Filter Influent	SP3	30	1.12	NA	NA	NA	NA	NA	NA	8.5	ND: <5.0
Vortisand Filter Effluent/ GAC Influent	SP4	25	1.14	NA	NA	NA	NA	NA	NA	12	7.4
GAC Midpoint	SP6A	46	ND: <0.05	NA	NA	NA	NA	NA	NA	3.4	ND: <5.0
GAC Effluent	SP7	58	ND: <0.05	NA	NA	NA	NA	NA	NA	ND: <3.0	ND: <5.0

September 16, 2000

Sample		TSS (mg/L)	PCBs (ug/L)	Dissolved				Total			
Location	ID #			Cadmium (ug/L)	Chromium (ug/L)	Copper (ug/L)	Lead (ug/L)	Cadmium (ug/L)	Chromium (ug/L)	Copper (ug/L)	Lead (ug/L)
Clarifier Influent	SP1	69	3.93	NA	NA	19	ND: <5.0	NA	NA	14	ND: <5.0
Clarifier Effluent	SP2	71	3.05	NA	NA	7.4	ND: <5.0	NA	NA	6.2	ND: <5.0
Vortisand Filter Influent	SP3	57	1.29	NA	NA	7.5	ND: <5.0	NA	NA	7.2	ND: <5.0
Vortisand Filter Effluent/ GAC Influent	SP4	49	1.28	NA	NA	12	ND: <5.0	NA	NA	12	ND: <5.0
GAC Midpoint	SP6A	39	ND: <0.05	NA	NA	ND: <3.0	ND: <5.0	NA	NA	ND: <3.0	92
GAC Effluent	SP7	34	ND: <0.05	NA	NA	ND: <3.0	ND: <5.0	NA	NA	ND: <3.0	ND: <5.0

NA = Not Analyzed
ND = Not Detected

By: JJB 10/25/01
Chk'd 66 10/30/01

Table B1 (Cont.)
Pilot - Scale Activated Carbon Treatment Analytical Results

September 17, 2000

Sample		TSS (mg/L)	PCBs (ug/L)	Dissolved				Total			
Location	ID #			Cadmium (ug/L)	Chromium (ug/L)	Copper (ug/L)	Lead (ug/L)	Cadmium (ug/L)	Chromium (ug/L)	Copper (ug/L)	Lead (ug/L)
Clarifier Influent	SP1	74	4.22	NA	NA	14	ND: <5.0	NA	NA	17	ND: <5.0
Clarifier Effluent	SP2	71	3.53	NA	NA	12	ND: <5.0	NA	NA	13	ND: <5.0
Vortisand Filter Influent	SP3	44	1.04	NA	NA	11	ND: <5.0	NA	NA	12	ND: <5.0
Vortisand Filter Effluent/ GAC Influent	SP4	32	1.06	NA	NA	15	ND: <5.0	NA	NA	15	ND: <5.0
GAC Midpoint	SP6A	52	ND: <0.05	NA	NA	ND: <3.0	ND: <5.0	NA	NA	ND: <3.0	ND: <5.0
GAC Effluent	SP7	27	ND: <0.05	NA	NA	ND: <3.0	ND: <5.0	NA	NA	ND: <3.0	ND: <5.0

September 18, 2000

Sample		TSS (mg/L)	PCBs (ug/L)	Dissolved				Total			
Location	ID #			Cadmium (ug/L)	Chromium (ug/L)	Copper (ug/L)	Lead (ug/L)	Cadmium (ug/L)	Chromium (ug/L)	Copper (ug/L)	Lead (ug/L)
Clarifier Influent	SP1	76	3.68	NA	NA	NA	NA	NA	NA	16	ND: <5.0
Clarifier Effluent	SP2	89	2.57	NA	NA	NA	NA	NA	NA	12	ND: <5.0
Vortisand Filter Influent	SP3	72	0.98	NA	NA	NA	NA	NA	NA	12	ND: <5.0
Vortisand Filter Effluent/ GAC Influent	SP4	55	1.05	NA	NA	NA	NA	NA	NA	15	ND: <5.0
GAC Midpoint	SP6A	53	ND: <0.05	NA	NA	NA	NA	NA	NA	ND: <3.0	ND: <5.0
GAC Effluent	SP7	52	ND: <0.05	NA	NA	NA	NA	NA	NA	ND: <3.0	ND: <5.0

September 19, 2000

Sample		TSS (mg/L)	PCBs (ug/L)	Dissolved				Total			
Location	ID #			Cadmium (ug/L)	Chromium (ug/L)	Copper (ug/L)	Lead (ug/L)	Cadmium (ug/L)	Chromium (ug/L)	Copper (ug/L)	Lead (ug/L)
Clarifier Influent	SP1	79	8.27	ND: <5.0	ND: <20.0	NA	NA	ND: <5.0	ND: <22.0	18	ND: <5.0
Clarifier Effluent	SP2	72	3.25	ND: <5.0	ND: <20.0	NA	NA	ND: <5.0	ND: <22.0	7.9	ND: <5.0
Vortisand Filter Influent	SP3	58	1.11	ND: <5.0	ND: <20.0	NA	NA	ND: <5.0	ND: <22.0	12	ND: <5.0
Vortisand Filter Effluent/ GAC Influent	SP4	45	0.73	ND: <5.0	ND: <20.0	NA	NA	ND: <5.0	ND: <22.0	18	ND: <5.0
GAC Midpoint	SP6A	44	ND: <0.05	ND: <5.0	ND: <20.0	NA	NA	ND: <5.0	ND: <22.0	ND: <3.0	ND: <5.0
GAC Effluent	SP7	34	ND: <0.05	ND: <5.0	ND: <20.0	NA	NA	ND: <5.0	ND: <22.0	ND: <3.0	ND: <5.0

Table B2
Pilot - Scale UV/OX Treatment Analytical Results

September 25, 2000

Sample		TSS	PCBs	Dissolved				Total			
Location	ID #	(mg/L)	(ug/L)	Cadmium (ug/L)	Chromium (ug/L)	Copper (ug/L)	Lead (ug/L)	Cadmium (ug/L)	Chromium (ug/L)	Copper (ug/L)	Lead (ug/L)
Clarifier Influent	SP1	89	11.2	ND: <5.0	ND: <20.0	5.6	ND: <5.0	ND: <5.0	ND: <22.0	22	6.6
Clarifier Effluent	SP2	74	10.8	ND: <5.0	ND: <20.0	4.1	ND: <5.0	ND: <5.0	ND: <22.0	5.0	ND: <5.0
Vortisand Filter Influent	SP3	67	1.26	ND: <5.0	ND: <20.0	7.2	ND: <5.0	ND: <5.0	ND: <22.0	6.9	ND: <5.0
Vortisand Filter Effluent/ GAC Influent	SP4	61	ND: <0.05	ND: <5.0	ND: <20.0	9	ND: <5.0	ND: <5.0	ND: <22.0	11	ND: <5.0
UV/Oxidation Effluent	SP5	57	0.06	ND: <5.0	ND: <20.0	14	ND: <5.0	ND: <5.0	ND: <22.0	14	ND: <5.0
GAC Midpoint	SP6A	57	ND: <0.05	ND: <5.0	ND: <20.0	ND: <3.0	ND: <5.0	ND: <5.0	ND: <22.0	3.3	17
GAC Effluent	SP7	62	ND: <0.05	NA	NA	NA	NA	NA	NA	ND: <3.0	ND: <5.0
Blank		-	-	ND: <5.0	ND: <20.0	ND: <3.0	ND: <5.0	ND: <5.0	ND: <22.0	< 3	ND: <5.0

September 26, 2000

Sample		TSS	PCBs	Dissolved				Total			
Location	ID #	(mg/L)	(ug/L)	Cadmium (ug/L)	Chromium (ug/L)	Copper (ug/L)	Lead (ug/L)	Cadmium (ug/L)	Chromium (ug/L)	Copper (ug/L)	Lead (ug/L)
Clarifier Influent	SP1	86	8.72	ND: <5.0	ND: <20.0	7.8	ND: <5.0	ND: <5.0	ND: <22.0	22	6.9
Clarifier Effluent	SP2	81	8.18	ND: <5.0	ND: <20.0	6.7	ND: <5.0	ND: <5.0	ND: <22.0	7.2	ND: <5.0
Vortisand Filter Influent	SP3	56	1.5	ND: <5.0	ND: <20.0	6.3	ND: <5.0	ND: <5.0	ND: <22.0	6.4	ND: <5.0
Vortisand Filter Effluent/ GAC Influent	SP4	63	ND: <0.05	ND: <5.0	ND: <20.0	9.6	ND: <5.0	ND: <5.0	ND: <22.0	9.8	ND: <5.0
UV/Oxidation Effluent	SP5	61	ND: <0.05	ND: <5.0	ND: <20.0	16	ND: <5.0	ND: <5.0	ND: <22.0	12	ND: <5.0
UV/Oxidation Effluent	SP5 Dup	-	-	ND: <5.0	ND: <20.0	15	ND: <5.0	NA	NA	NA	NA
GAC Midpoint	SP6A	61	ND: <0.05	ND: <5.0	ND: <20.0	ND: <3.0	ND: <5.0	ND: <5.0	ND: <22.0	ND: <3.0	ND: <5.0
GAC Effluent	SP7	57	ND: <0.05	NA	NA	18	ND: <5.0	NA	NA	ND: <3.0	ND: <5.0
GAC Effluent	SP7DUP	ND: <5.0	ND: <0.05	NA	NA	NA	NA	ND: <5.0	ND: <22.0	ND: <3.0	ND: <5.0
GAC Effluent	SP7DUP	ND: <5.0	ND: <0.05	NA	NA	NA	NA	ND: <5.0	ND: <22.0	ND: <3.0	ND: <5.0
Blank		ND: <5.0	ND: <0.05	NA	NA	NA	NA	ND: <5.0	ND: <22.0	ND: <3.0	ND: <5.0

NA = Not Analyzed
ND = Not Detected

By: JJB 8/29/01
Chkd EG 10/3/01

Table B2 (Cont.)
Pilot - Scale UV/OX Treatment Analytical Results

September 27, 2000

Sample		TSS	PCBs	Dissolved				Total			
Location	ID #	(mg/L)	(ug/L)	Cadmium	Chromium	Copper	Lead	Cadmium	Chromium	Copper	Lead
Clarifier Influent	SP1	14	8.01	NA	NA	NA	NA	ND: <5.0	ND: <22.0	15	6.1
Clarifier Effluent	SP2	20	6.86	NA	NA	NA	NA	ND: <5.0	ND: <22.0	6.4	ND: <5.0
Vortisand Filter Influent	SP3	8	1.51	NA	NA	NA	NA	ND: <5.0	ND: <22.0	5.6	ND: <5.0
Vortisand Filter Effluent/ GAC Influent	SP4	ND: <5.0	1.19	NA	NA	NA	NA	ND: <5.0	ND: <22.0	12	ND: <5.0
UV/Oxidation Effluent	SP5	ND: <5.0	ND: <0.05	NA	NA	NA	NA	ND: <5.0	ND: <22.0	11	ND: <5.0
GAC Midpoint	SP6A	ND: <5.0	ND: <0.05	NA	NA	NA	NA	ND: <5.0	ND: <22.0	ND: <3.0	ND: <5.0
GAC Effluent	SP7	ND: <5.0	ND: <0.05	NA	NA	NA	NA	ND: <5.0	ND: <22.0	ND: <3.0	ND: <5.0
GAC Effluent	SP7DUP	ND: <5.0	ND: <0.05	NA	NA	NA	NA	ND: <5.0	ND: <22.0	ND: <3.0	ND: <5.0
GAC Effluent	SP7DUP	ND: <5.0	ND: <0.05	NA	NA	NA	NA	ND: <5.0	ND: <22.0	ND: <3.0	ND: <5.0
Blank		ND: <5.0	ND: <0.05	NA	NA	NA	NA	ND: <5.0	ND: <22.0	ND: <3.0	ND: <5.0

September 28, 2000

Sample		TSS	PCBs	Dissolved				Total			
Location	ID #	(mg/L)	(ug/L)	Cadmium (ug/L)	Chromium (ug/L)	Copper (ug/L)	Lead (ug/L)	Cadmium (ug/L)	Chromium (ug/L)	Copper (ug/L)	Lead (ug/L)
Clarifier Influent	SP1	10	5.8	ND: <0.05	ND: <20.0	9.8	ND: <5.0	ND: <5.0	ND: <22.0	22	ND: <5.0
Clarifier Effluent	SP2	20	4.63	ND: <0.05	ND: <20.0	8.3	ND: <5.0	6.1	ND: <22.0	16	ND: <5.0
Vortisand Filter Influent	SP3	ND: <5.0	1.39	ND: <0.05	ND: <20.0	6.7	ND: <5.0	ND: <5.0	ND: <22.0	7.2	ND: <5.0
Vortisand Filter Info. 0.45 um filtration	SP3F	ND: <5.0	0.58	NA	NA	NA	NA	NA	NA	NA	NA
Vortisand Filter Effluent/ GAC Influent	SP4	6	1.24	ND: <0.05	ND: <20.0	14	ND: <5.0	ND: <5.0	ND: <22.0	28	5.2
Vortisand Filter Info. 0.45 um filtration	SP4F	ND: <5.0	0.42	NA	NA	NA	NA	NA	NA	NA	NA
UV/Oxidation Effluent	SP5	6	ND: <0.05	ND: <0.05	ND: <20.0	19	ND: <5.0	ND: <5.0	ND: <22.0	33	8.3
GAC Midpoint	SP6A	ND: <5.0	ND: <0.05	ND: <0.05	ND: <20.0	ND: <3.0	ND: <5.0	ND: <5.0	ND: <22.0	ND: <3.0	ND: <5.0
GAC Effluent	SP7	ND: <5.0	ND: <0.05	ND: <0.05	ND: <20.0	ND: <3.0	ND: <5.0	ND: <5.0	ND: <22.0	ND: <3.0	ND: <5.0

By: JJB 10/24/01
Chkd: EG 10/30/01

Table B2 (Cont.)
Pilot - Scale UV/OX Treatment Analytical Results

September 29, 2000

Sample		TSS (mg/L)	PCBs (ug/L)	Dissolved				Total			
Location	ID #			Cadmium (ug/L)	Chromium (ug/L)	Copper (ug/L)	Lead (ug/L)	Cadmium (ug/L)	Chromium (ug/L)	Copper (ug/L)	Lead (ug/L)
Clarifier Influent	SP1	34	12	ND: <5.0	ND: <20.0	6.7	ND: <5.0	ND: <5.0	ND: <22.0	20	5.6
Clarifier Effluent	SP2	47	13.2	ND: <5.0	ND: <20.0	5.7	ND: <5.0	ND: <5.0	ND: <22.0	7.3	ND: <5.0
Vortisand Filter Influent	SP3	30	1.54	ND: <5.0	ND: <20.0	8.5	ND: <5.0	ND: <5.0	ND: <22.0	8.9	ND: <5.0
Vortisand Filter Effluent/ GAC Influent	SP4	33	1.42	ND: <5.0	ND: <20.0	39	ND: <5.0	ND: <5.0	ND: <22.0	15	ND: <5.0
UV/Oxidation Effluent	SP5	23	ND: <0.05	ND: <5.0	ND: <20.0	11	ND: <5.0	ND: <5.0	ND: <22.0	17	ND: <5.0
GAC Midpoint	SP6A	35	ND: <0.05	ND: <5.0	ND: <20.0	ND: <3.0	ND: <5.0	ND: <5.0	ND: <22.0	ND: <3.0	ND: <5.0
GAC Effluent	SP7	27	ND: <0.05	ND: <5.0	ND: <20.0	ND: <3.0	ND: <5.0	ND: <5.0	ND: <22.0	ND: <3.0	ND: <5.0

NA = Not Analyzed
ND = Not Detected

By: JJB 10/29/01
Chkd EG 10/30/01

Table D-1
Turbidity Measurements Activated Carbon Pilot Scale Treatment

DATE	DAILY AVERAGE TURBIDITY MEASUREMENTS (NTU)				
	Clarifier Influent SP1	Clarifier Effluent SP2	Vortisand Influent	Vortisand Effluent/ GAC Influent	GAC Effluent
9/5/00	NM	NM	NM	NM	NM
9/6/00	8.75	4.00	NM	NM	NM
9/7/00	7.29	6.75	NM	NM	NM
9/8/00	7.53	4.84	NM	NM	NM
9/9/00	NM	NM	NM	NM	NM
9/10/00	NM	NM	NM	NM	NM
9/11/00	10.31	3.50	NM	NM	NM
9/12/00	7.46	3.71	NM	NM	NM
9/13/00	6.70	2.89	NM	NM	NM
9/14/00	6.18	2.41	1.15	0.89	0.58
9/15/00	6.87	4.04	1.09	0.68	0.32
9/16/00	6.58	2.76	1.52	0.65	0.50
9/17/00	5.60	3.24	0.64	0.27	0.29
9/18/00	7.12	6.90	0.78	0.54	0.30
9/19/00	8.46	5.26	NM	NM	NM
9/20/00	10.13	3.59	NM	NM	NM
9/21/00	16.0	3.90	NM	NM	NM
9/22/00	17.25	4.8	NM	NM	NM
9/23/00	NM	NM	NM	NM	NM
9/24/00	NM	NM	NM	NM	NM
Average	8.81	4.17	1.04	0.61	0.40

NM = Not Measured

By: JDB 10/31/01
Chkd: GG 10/30/01

Table D-2
Turbidity Measurements UV/Oxidation Pilot Scale Treatment

DATE	DAILY AVERAGE TURBIDITY MEASUREMENTS (NTU)					
	Clarifier Influent SP1	Clarifier Effluent SP2	Vortisand Influent	Vortisand Effluent/ UV/OX Influent	UV/OX Effluent/ GAC Influent	GAC Effluent
9/25/00	15.85	5.54	1.24	0.55	0.56	NM
9/26/00	14.37	5.78	1.26	0.52	0.43	0.03
9/27/00	11.12	4.79	0.59	0.63	0.78	0.03
9/28/00	7.25	4.42	0.83	0.71	0.63	0.03
9/29/00	19.93	4.31	0.85	0.48	0.37	0.11
Average	13.70	4.97	0.95	0.58	0.55	0.05

NM = Not Measured

By: JJB 10/29/01
Chkd EG 10/30/01

Table D-3
Vortisand Filtration Performance
Turbidity Measurements

DATE	Vortisand Turbiduty (NTU)		
	Vortisand Effluent/ UV/OX Influent	UV/OX Effluent/ GAC Influent	GAC Effluent
10/4/00	2.96	2.49	NM
10/4/00	2.92	2.41	NM
10/4/00	30 - 32	NM	NM
10/5/00	7.9 - 8.1	5.3 - 5.5	NM
10/5/00	4.8	7.6 - 7.2	NM
10/6/00	NM	NM	NM
10/7/00	NM	NM	NM
10/8/00	NM	NM	NM
10/9/00	NM	NM	NM
10/10/00	NM	NM	NM
10/11/00	2.7 - 2.8	2.9 - 3.0	0.90
10/11/00	37 - 39	6.1 - 6.2	1.4 - 1.5
10/11/00	5.5	NM	NM
10/11/00	16 - 18	6.3 - 6.5	1.5 - 1.6
10/12/00	NM	NM	NM
10/13/00	NM	NM	NM
10/13/00	9.1	6.0	1.99
10/13/00	9.5	5.3 - 5.6	NM
10/13/00	9.3	5.9 - 6.0	NM
10/13/00	9.4 - 9.5	8.0 - 8.3	0.2
10/13/00	9.3	7.1 - 7.3	NM
10/13/00	8.5 - 8.6	3.6 - 3.8	NM
10/13/00	8.8 - 9.0	3.3 - 3.7	NM
10/13/00	9.00	3.1 - 3.2	1.0 - 1.2
10/14/00	NM	NM	NM
10/15/00	NM	NM	NM
10/16/00	NM	NM	NM

NM = Not Measured

CALCULATION COVER SHEET

PROJECT New Bedford Harbor Superfund Site OU#1

SUBJECT Filtration Equalization Basin (CDF Cell #3) Residence Time

CLIENT U.S. Army Corps of Engineers – New England District (USACE – NED)

CALCULATION NO. P-03 PROJECT NO. 5197.1720.3392

NO OF SHEETS 2 DESIGN LEVEL _____

CALCULATION BY OTHERS _____ YES X NO

PREPARER E. Griffin

REVIEWED BY [signature] DATE 6-18-02

ASSUMPTIONS THAT REQUIRE CONFIRMATION _____ YES X NO

ASSUMPTIONS CONFIRMED BY _____ DATE _____

PRINT NAME, DATE AND INITIAL

Rev No	Affected Sheets	Prepared by Date	Checked by Date	Verified by Date

FOSTER WHEELER ENVIRONMENTAL CORPORATION

BY EG DATE 6/17/02 SHEET 2 OF 2

CHKD. BY jb DATE 6-18-02 OFS NO. DEPT. NO.

CLIENT USACE

PROJECT New Bedford Harbor Superfund Site - WTP Design

SUBJECT Filtration Equalization Basin Residence Time

GIVEN :

- Equalization basin volume (CDF Cell #3) = 430,000 gal
- Q_{MIN} = 700 gpm
- Q_{MAX} = 2000 gpm

FIND : residence times

SOLUTION :

1. Q_{MIN} : residence time $= \dfrac{\text{equal. basin volume}}{Q_{MIN}}$

$$= \frac{430{,}000 \text{ gal}}{700 \text{ gal/min}} \cdot \frac{\text{hr}}{60 \text{ min}}$$

$$= \boxed{10.2 \text{ hrs}}$$

2. Q_{MAX} : residence time $= \dfrac{430{,}000 \text{ gal}}{2000 \text{ gal/min}} \cdot \dfrac{\text{hr}}{60 \text{ min}}$

$$= \boxed{3.6 \text{ hrs}}$$

CALCULATION COVER SHEET

PROJECT New Bedford Harbor Superfund Site OU#1

SUBJECT Clarifier Feed Pump (P-101) Sizing

CLIENT U.S. Army Corps of Engineers – New England District (USACE – NED)

CALCULATION NO. P-04 PROJECT NO. 5197.1720.3392

NO OF SHEETS _____ DESIGN LEVEL _____

CALCULATION BY OTHERS _____ YES _____ NO

PREPARER James Buckman

REVIEWED BY E. Butler DATE 10-30-01

ASSUMPTIONS THAT REQUIRE CONFIRMATION _____ YES _____ NO

ASSUMPTIONS CONFIRMED BY _____ DATE _____

PRINT NAME, DATE AND INITIAL

Rev No	Affected Sheets	Prepared by Date	Checked by Date	Verified by Date

4: JJB 10/29/01
hk'd EB 10/30/01

I. Scope and Purpose

Determine the head requirements for Clarifier Feed Pump (P-101 A/B/C). In addition, determine head losses during single pump operation and during dual (parallel) operation.

II. References

1. Literature

Flow of Fliuds Through Valves, Fittings and Pipe (Technical Paper No. 410), Crane Company, 1988; 25th Printing (1991).

2. Documents

"Basis of Design/Design Analysis (BD/DA) Report for Water Treatment Plant", New Bedford Harbor Superfund Site – Operable Unit #1, November 2001. USACE Contract # DACW33-94-D-0002, Task Order #17.

Drawing C-101:	Site Layout
Drawing M-101:	General Arrangement Equipment – Existng WTP
Drawing M-102:	General Arrangement Equipment – New WTP
Drawing P-601:	Piping and Instrumentation Drawing - Clarifier

Godwin Pump Performance Curves and Vendor Information

Westfall In-Line "Injection Mixer – Head Loss" Curves

III. Assumptions

- Flow rate variable form 700 gpm to 2,000 gpm
- Assume schedule 40 steel pipie, which will result in conservative pressure drop values compared to PVC.
- Assume pipe routing based on M-101 and M-102
- Assume the level in CDF Cell #2 is near minimum value to provide a conservative value for the static lift required.

Ry: JJB 10/29/01
Rev'd EB 10/30/01

IV. Solution

To determine pump head requirements for clarifier feed pumps (P-101 A/B/C) use Bernoulli's Theorem (Equation #1) to construct system curves.

Equation #1 $\Delta H = \Delta P(144/\rho) + \Delta Z + \frac{(V_2^2 - V_1^2)}{2g} + h_L$ Crane p. 3-2

where: ΔH = total head difference, ft (H_2O)
ΔP = total pressure difference, lbs/in^2 (psi)
ρ = density of fluid, lbs/ft^3
ΔZ = difference static head, ft
V = velocity, ft/sec
g = acceleration of gravity, 32.2 ft/s^2
h_L = frictional head loss, ft (Equation #2)

Friction Losses (h_L):

Equation #2 $h_L = \frac{0.00259KQ^2}{d^4}$ Crane p. 3-4

where: K = resistance coefficient
Q = flowrate, gpm
d = diameter of pipe, inches

Resistance Coefficient (K):

Defined below in Table 1. K values for pipe fittings are taken from Crane Appendix A (pgs A-26 through A-29)

Pipe sizes and estimated lengths based on design drawings (attached) are provided in Table 2.

Schematic of pump flow diagram is presented in Figure 1.

Ky: KJTJB 10/29/01
Shkd EG 10/30/01

Table 1 – K Values for Pipe Fittings

Location	Elements Effecting P In Pipe	Quantity	Element K-Factor	F_T	Extended K-Factor
Suction	Entrance	1	0.78		0.78
	8" plug valve	1	$8f_T$	0.014	0.112
	8" 90° elbows	4	$30f_T$	0.014	1.68
Discharge	6x8 enlargement	1	0.6		0.6
	8" check valve (swing)	1	$50f_T$	0.014	0.7
	8" Ball valve (full port)	1	$3f_T$	0.014	0.042
	8x12 enlargement	2	1.55		3.11
	12x8 reducer	1	0.86		.86
	8" Plug Valve	2	$8f_T$	0.014	0.224
	12" Plug valve	1	$8f_T$	0.013	0.104
	12" Flow Thru-Branch Tee	1	$60f_T$	0.013	.78
	12" elbows	8	$30f_T$	0.013	3.12
	8" elbows	8	$30f_T$	0.014	3.36
	12x20 enlargement	1	3.14		3.14
	20" Exit	1	1.0	0.013	1.0

Where:

f_T = friction factor in zone of complete turbulence
K factor for reducers/enlargements used Formula 3 on page A-26 of Cranes

Table 2 – Pipe Sizes and Lengths

Location	Size (inches)	Origin	Terminate	Length (feet)
Suction	8	CDF Cell #2	P-101	120
Discharge	8	P-101	After Manifold	10
Discharge	12	Manifold	Clarifier	150

4: JJB 10/29/01
hkd EG 10/30/01

1. PIPE

a) Determine resistance coefficient (K) for pipe

Equation #3 $K = f(L/D)$ Crane p. 3-4

Where:

f = friction factor based on reynolds number (R_e)
L = Length of pipe, feet
D = pipe diameter, feet

Equation #4 Reynolds Number (R_e) = $50.6(Q\rho/d\mu)$

Where:

Q = rate of flow, gpm
ρ = weight density of fluid, lbs/ft^3
d = internal diameter of pipe, inches
μ = absolute (dynamic) viscosity, centipoise

i) For 8" Pipe

R_e (@ 700 gpm) = 50.6(700*62.4)/(8*1.1) = 251,160

R_e (@ 1,000 gpm) = 50.6(1,000*62.4)/(8*1.1) = 358,800

Friction factors (f) from Cranes Appendix A (A-25) for 8" pipe

f (@700 gpm) = 0.0168

f (@1,000 gpm) = 0.0165

ii) For 12" Pipe

R_e (@ 700 gpm) = 50.6(700*62.4)/(12*1.1) = 167,440

R_e (@ 1,000 gpm) = 50.6(1,000*62.4)/(12*1.1) = 239,200

R_e (@ 2,000 gpm) = 50.6(2,000*62.4)/(12*1.1) = 478,400

Friction factors (f) from Cranes Appendix A (A-25) for 12" pipe

f (@700 gpm) = 0.0168

f (@1,000 gpm) = 0.0162

f (@2,000 gpm) = 0.0155

1:JJB 10/31/01
2:Kd EG 10/30/01

b) Determine Resistance Coefficients (K) for pipe at various flows (pipe lengths from Table 2)

i) 8" Pipe

K (@700 gpm) = 0.0168*(130/(8/12)) = 3.28

K (@1,000 gpm) = 0.0165*(130/(8/12)) = 3.22

ii) 12" Pipe

K (@700 gpm) = 0.0168*(150/(12/12)) = 2.52

K (@1,000 gpm) = 0.0162(150/(12/12)) = 2.43

K (@2,000 gpm) = 0.0155*(150/(12/12)) = 2.33

2. Pipe and Fittings

a) Determine K- Factors for 8" and 12" pipe and fittings

i) 8" Pipe

K (@700 gpm) = (0.78 + 0.112 + 1.68 + 0.6 + 0.7 +0.042 + 0.86 + 0.224 + 3.36) + 3.28
= (8.35) + 3.28
= 11.63

K (@1,000 gpm) = (8.35) + 3.22
= 11.57

ii) 12" Pipe

K (@700 gpm) = (3.11+ 0.104 + 0.78 + 3.12 + 3.14 +1.0) + 2.52
= (11.25) + 2.52
= 13.77

K (@1,000 gpm) = (11.25) + 2.43
= 13.68

K (@2,000 gpm) = (11.25) + 2.33
= 13.58

4: JTB 10/29/4
Wd EG 10/30/01

7/27

3. Frictional Head loss for one (1) pump operating (pipe & fittings)

Equation #5 $h_L = h_{L\,(8\text{ inch})} + h_{L\,(10\text{ inch})} + h_{L\,(12\text{ inch})}$

$$h_{L\,(700\text{ gpm})} = \left[\frac{0.00259KQ^2}{d^4}\right]_{8\text{ in}} + \left[\frac{0.00259KQ^2}{d^4}\right]_{12\text{ in}} =$$

$$h_{L\,(700\text{ gpm})} = \frac{0.00259(11.63)(700)^2}{(8)^4} + \frac{0.00259(13.77)((700)^2}{(12)^4}$$

$$= 3.6 + 0.84 = 4.44 \text{ feet}$$

$$h_{L\,(1{,}000\text{ gpm})} = \left[\frac{0.00259(11.57)(1{,}000)^2}{(8)^4}\right]_{8\text{ in}} + \left[\frac{0.00259(13.68)((1{,}000)^2}{(12)^4}\right]_{12\text{ in}}$$

$$= 7.32 + 1.71 = 9.03 \text{ feet}$$

4. Frictional Head Loss for two (2) pumps running in parallel

- assume flowrate on suction side of pumps is equal
- Assume all 8" components receive ½ total flow for head loss calculations
- Use flowrates of 1,400 gpm and 2,000 gpm
- Interpolate K-factor for 12" pipe between 1,000 and 2,000,
- Assume when dual pumps are running at 1,400 gpm each individual pump flow is at 700 gpm

h_L (@1,400 gpm) $= h_{L\,(8\text{ inch})}$ (@700 gpm) $+ h_{L\,(12\text{ inch})}$ (@1,400 gpm)

determine k values for 12"pipe components. Interpolate between K @ 1,000 gpm and K @ 2,000 gpm for the 12" pipe.

$$K_{12\text{ inch}}(@1{,}400\text{ gpm}) = 13.68 + ((13.58 - 13.68)/(2{,}000 - 1{,}000))(1{,}400 - 1000)$$

$$= 13.64$$

Therefore, from above equations:

$$h_{L\,(1{,}400\text{ gpm})} = \left[\frac{0.00259(11.63)(700)^2}{(8)^4}\right]_{8\text{ in}} + \left[\frac{0.00259(13.64)((1{,}400)^2}{(12)^4}\right]_{12\text{ in}}$$

$$= 3.6 + 3.3 = 6.9 \text{ feet}$$

4: JJB 10/29/01
Lkd EG 10/30/01

$$h_{L\,(2{,}000\ gpm)} = \frac{0.00259(11.57)(1{,}000)^2}{(8)^4} + \frac{0.00259(13.58)((2{,}000)^2}{(12)^4}$$

$$= 7.32 + 6.78 = 14.1 \text{ feet}$$

5. Static Mixer Head Losses

Determine head loss at 700 gpm, 1,000 gpm, 1,400 gpm and 2,000 gpm.

- Assume addition of chemicals in-line (alum) induces negligible pressure drop.

$H_{static\ mixer}$ (@700 gpm) = 0.4 psi x 2.3 = 0.92 feet

$H_{static\ mixer}$ (@1,000 gpm) = 0.7 psi x 2.4 = 1.61 feet

$H_{static\ mixer}$ (@1,400 gpm) = 2 psi x 2.3 = 4.6 feet

$H_{static\ mixer}$ (@2,000 gpm) = 3 psi x 2.3 = 6.9 feet

6. Total Head Losses for Single Pump Operating at Various Flow rates

H_{700} = 23 ft + 4.44 ft + 0.92 ft = 28.36 feet

$H_{1,000}$ = 23 ft + 9.03 ft + 1.61ft = 33.64 feet

7. Total Head Losses for Dual Pumps Operating at Various Flowrates

$H_{1,400}$ = 23 ft + 6.9 ft + 4.6 ft = 34.5 feet

$H_{2,000}$ = 23 ft + 14.1 ft + 6.9 ft = 44 feet

By: JJB 10/25/01
Chkd: EG 10/30/01

STATIC HEAD LOSS (ΔZ)

$\Delta Z = 15 + 8 = 23$ FT

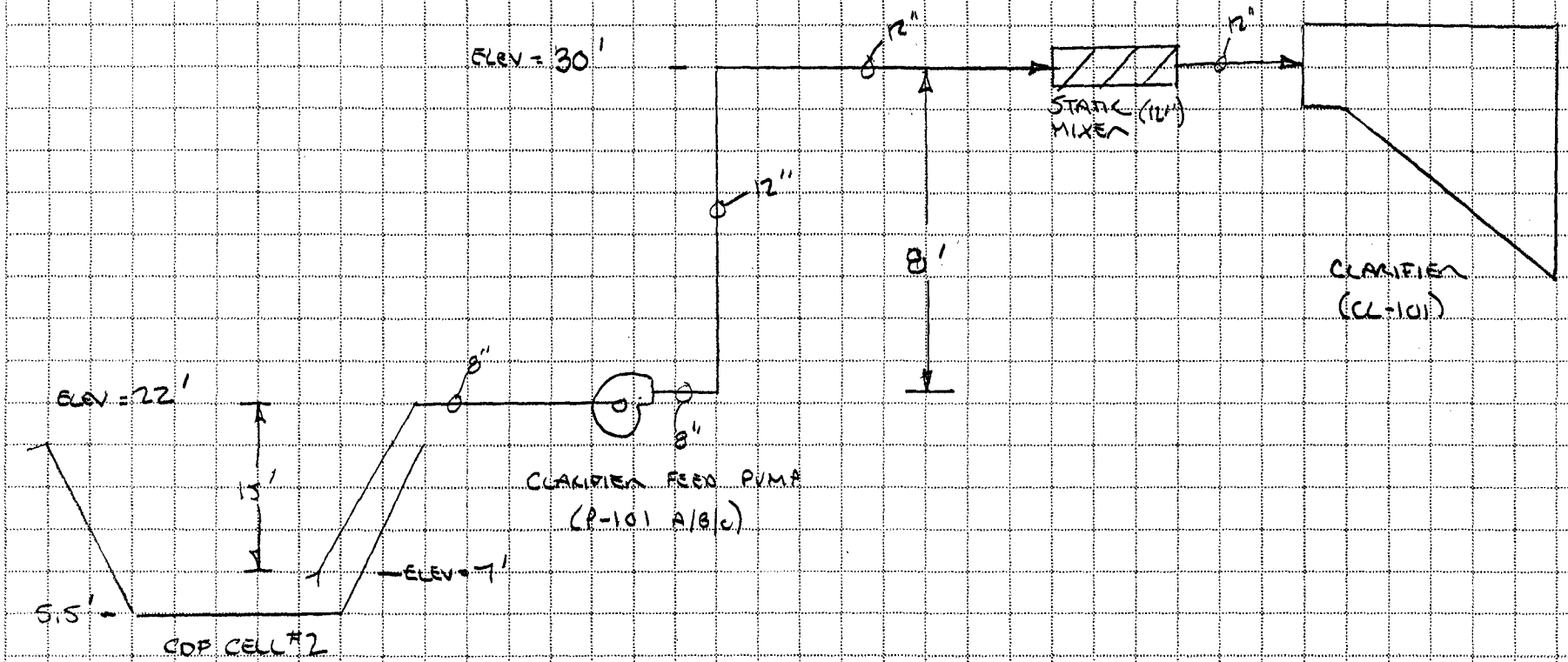

JJB 10/29/01
Kd 66 10/30/01

10/27

Summary of Formulas

To eliminate needless duplication, formulas have been written in terms of either specific volume $\overline{V}$ or weight density ρ, but not in terms of both, since one is the reciprocal of the other.

$$\overline{V} = \frac{1}{\rho} \qquad \rho = \frac{1}{\overline{V}}$$

These equations may be substituted in any of the formulas shown in this paper whenever necessary.

● Bernoulli's theorem: *Equation 3-1*

$$Z + \frac{144\,P}{\rho} + \frac{v^2}{2g} = H$$

$$Z_1 + \frac{144\,P_1}{\rho_1} + \frac{v_1^2}{2g} = Z_2 + \frac{144\,P_2}{\rho_2} + \frac{v_2^2}{2g} + h_L$$

● Mean velocity of flow in pipe:
(Continuity Equation) *Equation 3-2*

$$v = \frac{q}{A} = 183.3\,\frac{q}{d^2} = 0.408\,\frac{Q}{d^2}$$

$$v = 0.286\,\frac{B}{d^2} = 183.3\,\frac{w\overline{V}}{d^2} = 0.0509\,\frac{W\overline{V}}{d^2}$$

$$v = 0.001\,44\,\frac{q'_hT}{P'd^2} = 0.003\,89\,\frac{q'_hS_g}{\rho d^2}$$

$$V = \frac{q_m}{A} = 2.40\,\frac{W\overline{V}}{a} = 3.06\,\frac{W\overline{V}}{d^2}$$

$$V = 0.0865\,\frac{q'_hT}{P'd^2} = 0.233\,\frac{q'_hS_g}{\rho d^2}$$

● Reynolds number of flow in pipe: *Equation 3-3*

$$R_e = \frac{Dv\rho}{\mu_e} = \frac{Dv\rho}{32.2\mu'_e} = 123.9\,\frac{dv\rho}{\mu}$$

$$R_e = 22\,700\,\frac{q\rho}{d\mu} = \frac{473q\rho}{R_H\mu} = 50.6\,\frac{Q\rho}{d\mu}$$

$$R_e = 6.31\,\frac{W}{d\mu} = 0.482\,\frac{q'_hS_g}{d\mu} = 35.4\,\frac{B\rho}{d\mu}$$

$$R_e = \frac{Dv}{\nu'} = \frac{dv}{12\nu'} = 7740\,\frac{dv}{\nu}$$

$$R_e = 1\,419\,000\,\frac{q}{\nu d} = 3160\,\frac{Q}{\nu d} = 394\,\frac{W\overline{V}}{\nu d}$$

● Viscosity equivalents: *Equation 3-4*

$$\nu = \frac{\mu}{\rho'} = \frac{\mu}{S}$$

● Head loss and pressure drop in straight pipe:

Pressure loss due to flow is the same in a sloping, vertical, or horizontal pipe. However, the difference in pressure due to the difference in head must be considered in pressure drop calculations; see page 1-5.

Darcy's formula: *Equation 3-5*

$$h_L = f\,\frac{L}{D}\,\frac{v^2}{2g} = 0.1863\,\frac{fLv^2}{d}$$

$$h_L = 6260\,\frac{fLq^2}{d^5} = 0.0311\,\frac{fLQ^2}{d^5}$$

$$h_L = 0.015\,24\,\frac{fLB^2}{d^5} = 0.000\,483\,\frac{fLW^2\overline{V}^2}{d^5}$$

$$\Delta P = 0.001\,294\,\frac{fL\rho v^2}{d} = 0.000\,000\,359\,\frac{fL\rho V^2}{d}$$

$$\Delta P = 43.5\,\frac{fL\rho q^2}{d^5} = 0.000\,216\,\frac{fL\rho Q^2}{d^5}$$

$$\Delta P = 0.000\,1058\,\frac{fL\rho B^2}{d^5} = 0.000\,003\,36\,\frac{fLW^2\overline{V}}{d^5}$$

$$\Delta P = 0.000\,000\,007\,26\,\frac{fLT(q'_h)^2S_g}{d^5P'}$$

$$\Delta P = 0.000\,000\,019\,59\,\frac{fL(q'_h)^2S_g^2}{d^5\rho}$$

For simplified compressible fluid formulo, see page 3-22.

● Head loss and pressure drop with laminar flow in straight pipe:

For laminar flow conditions ($R_e < 2000$), the friction factor is a direct mathematical function of the Reynolds number only, and can be expressed by the formula: $f = 64/R_e$. Substituting this value of f in the Darcy formula, it can be rewritten:

Equation 3-6

$$h_L = 0.0962\,\frac{\mu Lv}{d^2\rho}$$

$$h_L = 17.65\,\frac{\mu Lq}{d^4\rho} = 0.0393\,\frac{\mu LQ}{d^4\rho}$$

$$h_L = 0.0275\,\frac{\mu LB}{d^4\rho} = 0.004\,90\,\frac{\mu LW}{d^4\rho^2}$$

$$\Delta P = 0.000\,668\,\frac{\mu Lv}{d^2} = 0.1225\,\frac{\mu Lq}{d^4}$$

$$\Delta P = 0.000\,273\,\frac{\mu LQ}{d^4} = 0.000\,191\,\frac{\mu LB}{d^4}$$

$$\Delta P = 0.000\,0340\,\frac{\mu LW}{d^4\rho}$$

By: 10/29/01 JJB
Chk'd EG 10/30/01

11/27

Summary of Formulas — continued

● Head loss and pressure drop through valves and fittings

Head loss through valves and fittings is generally given in terms of resistance coefficient K which indicates static head loss through a valve in terms of "velocity head", or, equivalent length in pipe diameters L/D that will cause the same head loss as the valve.

From Darcy's formula, head loss through a pipe is:

$$h_L = f \frac{L}{D} \frac{v^2}{2g} \qquad \textbf{Equation 3-5}$$

and head loss through a valve is:

$$h_L = K \frac{v^2}{2g} \qquad \textbf{Equation 3-14}$$

therefore: $$K = f \frac{L}{D} \qquad \textbf{Equation 3-15}$$

To eliminate needless duplication of formulas, the following are all given in terms of K. Whenever necessary, substitute $(f\,L/D)$ for (K).

$$h_L = \frac{522\,Kq^2}{d^4} = 0.002\,59\,\frac{KQ^2}{d^4} \qquad \textbf{Equation 3-14}$$

$$h_L = 0.001\,270\,\frac{KB^2}{d^4} = 0.000\,0403\,\frac{KW^2\overline{V}^2}{d^4}$$

$$\Delta P = 0.000\,1078\,K\rho v^2 = 0.000\,000\,0300\,K\rho V^2$$

$$\Delta P = 3.62\,\frac{K\rho q^2}{d^4} = 0.000\,017\,99\,\frac{K\rho Q^2}{d^4}$$

$$\Delta P = 0.000\,008\,82\,\frac{K\rho B^2}{d^4}$$

$$\Delta P = 0.000\,000\,280\,\frac{KW^2\overline{V}}{d^4}$$

$$\Delta P = 0.000\,000\,000\,605\,\frac{K(q'_h)^2\,T\,S_g}{d^4\,P'}$$

$$\Delta P = 0.000\,000\,001\,633\,\frac{K\,(q'_h)^2\,S_g^2}{d^4\,\rho}$$

For compressible flow with h_L or ΔP greater than approximately 10% of inlet absolute pressure, the denominator should be multiplied by Y^2. For values of Y, see page A-22.

● Pressure drop and flow of liquids of low viscosity using flow coefficient

$$\Delta P = \left(\frac{Q}{C_v}\right)^2 \frac{\rho}{62.4} \qquad \textbf{Equation 3-16}$$

$$Q = C_v\sqrt{\Delta P\,\frac{62.4}{\rho}} = 7.90\,C_v\sqrt{\frac{\Delta P}{\rho}}$$

$$C_v = Q\sqrt{\frac{\rho}{\Delta P\,(62.4)}} = \frac{29.9\,d^2}{\sqrt{f\,L/D}} = \frac{29.9\,d^2}{\sqrt{K}}$$

$$= \frac{891\,d^4}{(C_v)^2}$$

● Resistance coefficient, K, for sudden and gradual enlargements in pipes

If, $\theta \leq 45°$,

$$K_1 = 2.6\sin\frac{\theta}{2}\,(1-\beta^2)^2 \qquad \textbf{*Equation 3-17}$$

If, $45° < \theta \leq 180°$,

$$K_1 = (1-\beta^2)^2 \qquad \textbf{*Equation 3-17.1}$$

● Resistance coefficient, K, for sudden and gradual contractions in pipes

If, $\theta \leq 45°$,

$$K_1 = 0.8\sin\frac{\theta}{2}\,(1-\beta^2) \qquad \textbf{*Equation 3-18}$$

If, $45° < \theta \leq 180°$,

$$K_1 = 0.5\sqrt{\sin\frac{\theta}{2}}\,(1-\beta^2) \qquad \textbf{*Equation 3-18.1}$$

**Note:* The values of the resistance coefficients (K) in equations 3-17, 3-17.1, 3-18, and 3-18.1 are based on the velocity in the small pipe. To determine K values in terms of the greater diameter, divide the equations by β^4.

● Discharge of fluid through valves, fittings, and pipe; Darcy's formula

Equation 3-19

Liquid flow:

$$q = 0.0438\,d^2\sqrt{\frac{h_L}{K}} = 0.525\,d^2\sqrt{\frac{\Delta P}{K\rho}}$$

$$Q = 19.65\,d^2\sqrt{\frac{h_L}{K}} = 236\,d^2\sqrt{\frac{\Delta P}{K\rho}}$$

$$w = 0.0438\,\rho d^2\sqrt{\frac{h_L}{K}} = 0.525\,d^2\sqrt{\frac{\Delta P\rho}{K}}$$

$$W = 157.6\,\rho d^2\sqrt{\frac{h_L}{K}} = 1891\,d^2\sqrt{\frac{\Delta P\rho}{K}}$$

Compressible flow:

Equation 3-20

$$q'_h = 40\,700\,Yd^2\sqrt{\frac{\Delta P\,P'_1}{KT_1\,S_g}}$$

$$q'_h = 24\,700\,\frac{Yd^2}{S_g}\sqrt{\frac{\Delta P\,\rho_1}{K}}$$

$$q'_m = 678\,Yd^2\sqrt{\frac{\Delta P\,P'_1}{KT_1\,S_g}} = 412\,\frac{Yd^2}{S_g}\sqrt{\frac{\Delta P\,\rho_1}{K}}$$

$$q' = 11.30\,Yd^2\sqrt{\frac{\Delta P P'_1}{KT_1\,S_g}} = 6.87\,\frac{Yd^2}{S_g}\sqrt{\frac{\Delta P\rho_1}{K}}$$

$$w = 0.525\,Yd^2\sqrt{\frac{\Delta P}{K\overline{V}_1}} \qquad W = 1891\,Yd^2\sqrt{\frac{\Delta P}{K\overline{V}_1}}$$

Values of Y are shown on page A-22. For K, Y, and ΔP determination, see examples on pages 4-13 and 4-14.

3y: JJB 10/29/01
Chk'd EG 10/30/01

12/27

"K" FACTOR TABLE—SHEET 1 of 4

Representative Resistance Coefficients (K) for Valves and Fittings

("K" is based on use of schedule pipe as listed on page 2-10)

PIPE FRICTION DATA FOR CLEAN COMMERCIAL STEEL PIPE WITH FLOW IN ZONE OF COMPLETE TURBULENCE

Nominal Size	½"	¾"	1"	1¼"	1½"	2"	2½, 3"	4"	5"	6"	8-10"	12-16"	18-24"
Friction Factor (f_T)	.027	.025	.023	.022	.021	.019	.018	.017	.016	.015	.014	.013	.012

FORMULAS FOR CALCULATING "K" FACTORS* FOR VALVES AND FITTINGS WITH REDUCED PORT

(Ref: Pages 2-11 and 3-4)

- **Formula 1**

$$K_2 = \frac{0.8\left(\sin\frac{\theta}{2}\right)(1-\beta^2)}{\beta^4} = \frac{K_1}{\beta^4}$$

- **Formula 2**

$$K_2 = \frac{0.5\,(1-\beta^2)\sqrt{\sin\frac{\theta}{2}}}{\beta^4} = \frac{K_1}{\beta^4}$$

- **Formula 3**

$$K_2 = \frac{2.6\left(\sin\frac{\theta}{2}\right)(1-\beta^2)^2}{\beta^4} = \frac{K_1}{\beta^4}$$

- **Formula 4**

$$K_2 = \frac{(1-\beta^2)^2}{\beta^4} = \frac{K_1}{\beta^4}$$

- **Formula 5**

$$K_2 = \frac{K_1}{\beta^4} + \text{Formula 1} + \text{Formula 3}$$

$$K_2 = \frac{K_1 + \sin\frac{\theta}{2}[0.8\,(1-\beta^2) + 2.6\,(1-\beta^2)^2]}{\beta^4}$$

- **Formula 6**

$$K_2 = \frac{K_1}{\beta^4} + \text{Formula 2} + \text{Formula 4}$$

$$K_2 = \frac{K_1 + 0.5\sqrt{\sin\frac{\theta}{2}}\,(1-\beta^2) + (1-\beta^2)^2}{\beta^4}$$

- **Formula 7**

$$K_2 = \frac{K_1}{\beta^4} + \beta\,(\text{Formula 2} + \text{Formula 4}) \text{ when } \theta = 180^\circ$$

$$K_2 = \frac{K_1 + \beta\left[0.5\,(1-\beta^2) + (1-\beta^2)^2\right]}{\beta^4}$$

$$\beta = \frac{d_1}{d_2}$$

$$\beta^2 = \left(\frac{d_1}{d_2}\right)^2 = \frac{a_1}{a_2}$$

Subscript 1 defines dimensions and coefficients with reference to the smaller diameter.
Subscript 2 refers to the larger diameter.

***Use "K" furnished by valve or fitting supplier when available.**

SUDDEN AND GRADUAL CONTRACTION

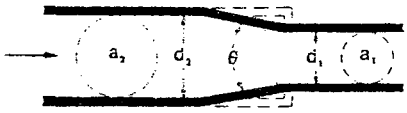

If: $\theta \leq 45^\circ$ . . . . . K_2 = Formula 1
$45^\circ < \theta \leq 180^\circ$ . . . K_2 = Formula 2

SUDDEN AND GRADUAL ENLARGEMENT

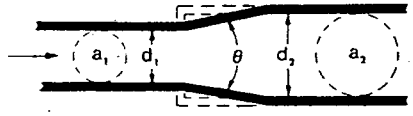

If: $\theta \leq 45^\circ$ . . . . . K_2 = Formula 3
$45^\circ < \theta \leq 180^\circ$ . . . K_2 = Formula 4

By: JJB 10/29/09
Chk'd EG 10/30/09

 13127

"K" FACTOR TABLE—SHEET 2 of 4

Representative Resistance Coefficients (K) for Valves and Fittings

(For formulas and friction data, see page A-26)

("K" is based on use of schedule pipe as listed on page 2-10)

GATE VALVES
Wedge Disc, Double Disc, or Plug Type

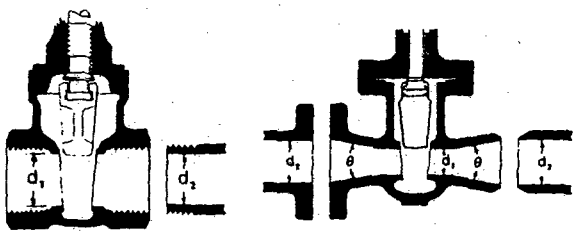

If: $\beta = 1$, $\theta = 0$ . . . . . $K_1 = 8 f_T$

$\beta < 1$ and $\theta \gtrless 45°$ . . . . . K_2 = Formula 5

$\beta < 1$ and $45° < \theta \gtrless 180°$ . . . K_2 = Formula 6

SWING CHECK VALVES

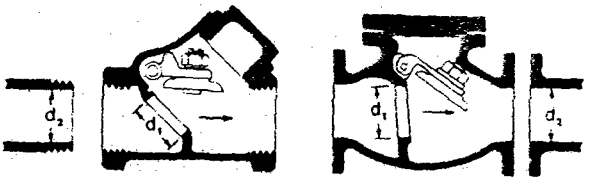

$K = 100 f_T$

Minimum pipe velocity (fps) for full disc lift $= 35 \sqrt{V}$

$K = 50 f_T$

Minimum pipe velocity (fps) for full disc lift $= 60 \sqrt{V}$ except U/L listed $= 100 \sqrt{V}$

GLOBE AND ANGLE VALVES

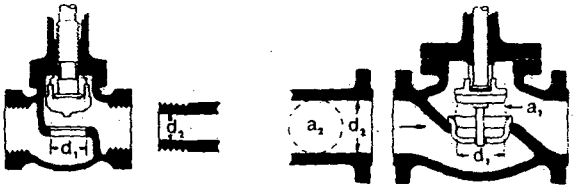

If: $\beta = 1 \ldots K_1 = 340 f_T$

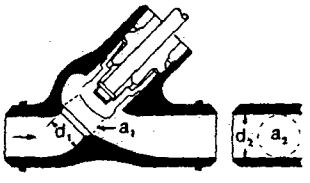

If: $\beta = 1 \ldots K_1 = 55 f_T$

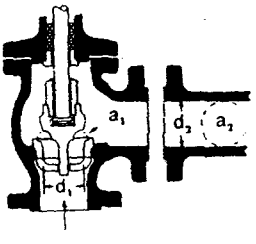

If: $\beta = 1 \ldots K_1 = 150 f_T$

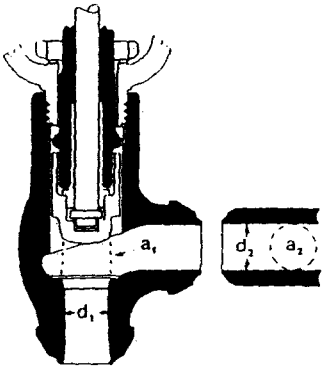

If: $\beta = 1 \ldots K_1 = 55 f_T$

All globe and angle valves, whether reduced seat or throttled,

If: $\beta < 1 \ldots K_2$ = Formula 7

LIFT CHECK VALVES

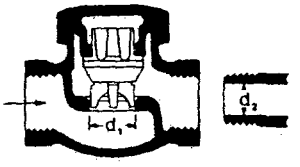

If: $\beta = 1 \ldots K_1 = 600 f_T$

$\beta < 1 \ldots K_2$ = Formula 7

Minimum pipe velocity (fps) for full disc lift $= 40 \beta^2 \sqrt{V}$

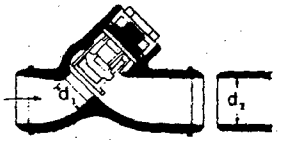

If: $\beta = 1 \ldots K_1 = 55 f_T$

$\beta < 1 \ldots K_2$ = Formula 7

Minimum pipe velocity (fps) for full disc lift $= 140 \beta^2 \sqrt{V}$

TILTING DISC CHECK VALVES

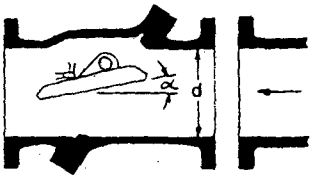

	$\alpha = 5°$	$\alpha = 15°$
Sizes 2 to 8" . . . K =	$40 f_T$	$120 f_T$
Sizes 10 to 14" . . . K =	$30 f_T$	$90 f_T$
Sizes 16 to 48" . . . K =	$20 f_T$	$60 f_T$
Minimum pipe velocity (fps) for full disc lift =	$80 \sqrt{V}$	$30 \sqrt{V}$

14127

Rev: 10/29/01 JJB
Chk'd GG 10/30/01

"K" FACTOR TABLE—SHEET 3 of 4

Representative Resistance Coefficients (K) for Valves and Fittings

(for formulas and friction data, see page A-26)

("K" is based on use of scheduled pipe as listed on page 2-10)

STOP-CHECK VALVES (Globe and Angle Types)

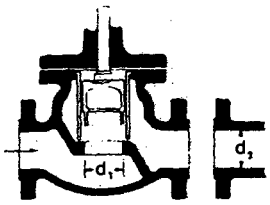

If:
$\beta = 1 \ldots K_1 = 400\, f_T$
$\beta < 1 \ldots K_2 =$ Formula 7

Minimum pipe velocity for full disc lift
$= 55\, \beta^2 \sqrt{\bar{V}}$

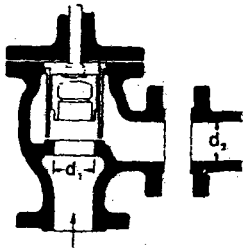

If:
$\beta = 1 \ldots K_1 = 200\, f_T$
$\beta < 1 \ldots K_2 =$ Formula 7

Minimum pipe velocity for full disc lift
$= 75\, \beta^2 \sqrt{\bar{V}}$

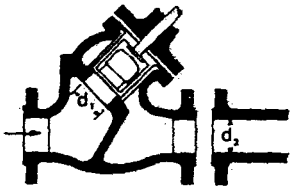

If:
$\beta = 1 \ldots K_1 = 300\, f_T$
$\beta < 1 \ldots K_2 =$ Formula 7

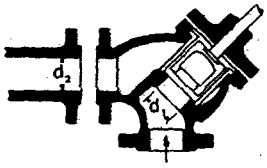

If:
$\beta = 1 \ldots K_1 = 350\, f_T$
$\beta < 1 \ldots K_2 =$ Formula 7

Minimum pipe velocity (fps) for full disc lift
$= 60\, \beta^2 \sqrt{\bar{V}}$

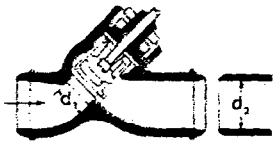

If:
$\beta = 1 \ldots K_1 = 55\, f_T$
$\beta < 1 \ldots K_2 =$ Formula 7

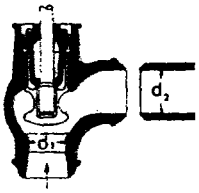

If:
$\beta = 1 \ldots K_1 = 55\, f_T$
$\beta < 1 \ldots K_2 =$ Formula 7

Minimum pipe velocity (fps) for full disc lift
$= 140\, \beta^2 \sqrt{\bar{V}}$

FOOT VALVES WITH STRAINER

Poppet Disc

$K = 420 f_T$

Minimum pipe velocity (fps) for full disc lift
$= 15 \sqrt{\bar{V}}$

Hinged Disc

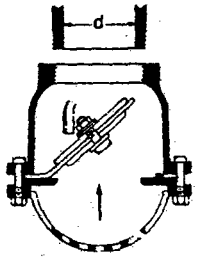

$K = 75 f_T$

Minimum pipe velocity (fps) for full disc lift
$= 35 \sqrt{\bar{V}}$

BALL VALVES

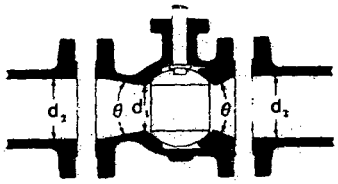

If: $\beta = 1,\ \theta = 0 \ldots\ldots\ldots\ldots K_1 = 3\, f_T$
$\beta < 1$ and $\theta \leq 45° \ldots\ldots\ldots K_2 =$ Formula 5
$\beta < 1$ and $45° < \theta \leq 180° \ldots K_2 =$ Formula 6

BUTTERFLY VALVES

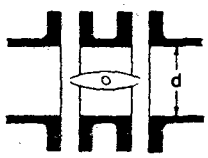

Sizes 2 to 8" $\ldots K = 45\, f_T$
Sizes 10 to 14" $\ldots K = 35\, f_T$
Sizes 16 to 24" $\ldots K = 25\, f_T$

By: JJB 10/29/01
Ck'd EE 10/30/01

"K" FACTOR TABLE—SHEET 4 of 4

Representative Resistance Coefficients (K) for Valves and Fittings

(for formulas and friction data, see page A-26)

("K" is based on use of schedule pipe as listed on page 2-10)

PLUG VALVES AND COCKS

Straight-Way

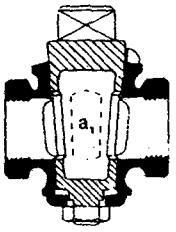

If: $\beta = 1$, $K_1 = 18\, f_T$

3-Way

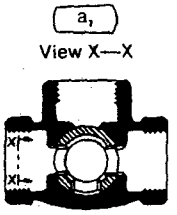

If: $\beta = 1$, $K_1 = 30\, f_T$

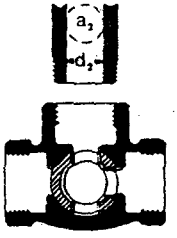

If: $\beta = 1$, $K_1 = 90\, f_T$

If: $\beta < 1 \ldots K_2 =$ Formula 6

MITRE BENDS

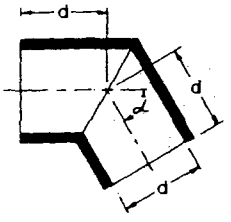

α	K
0°	2 f_T
15°	4 f_T
30°	8 f_T
45°	15 f_T
60°	25 f_T
75°	40 f_T
90°	60 f_T

90° PIPE BENDS AND FLANGED OR BUTT-WELDING 90° ELBOWS

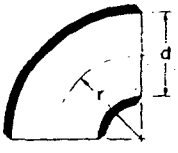

r/d	K	r/d	K
1	20 f_T	8	24 f_T
1.5	14 f_T	10	30 f_T
2	12 f_T	12	34 f_T
3	12 f_T	14	38 f_T
4	14 f_T	16	42 f_T
6	17 f_T	20	50 f_T

The resistance coefficient, K_B, for pipe bends other than 90° may be determined as follows:

$$K_B = (n - 1)\left(0.25\,\pi\, f_T \frac{r}{d} + 0.5\,K\right) + K$$

n = number of 90° bends
K = resistance coefficient for one 90° bend (per table)

CLOSE PATTERN RETURN BENDS

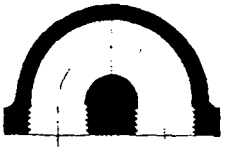

$K = 50\, f_T$

STANDARD ELBOWS

90°

$K = 30\, f_T$

45°

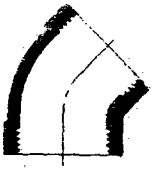

$K = 16\, f_T$

STANDARD TEES

Flow thru run. . . . . $K = 20\, f_T$
Flow thru branch. . . . $K = 60\, f_T$

PIPE ENTRANCE

Inward Projecting

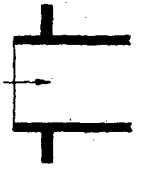

$K = 0.78$

r/d	K
0.00*	0.5
0.02	0.28
0.04	0.24
0.06	0.15
0.10	0.09
0.15 & up	0.04

*Sharp-edged

Flush

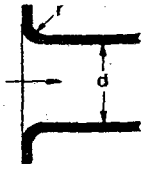

For K, see table

PIPE EXIT

Projecting

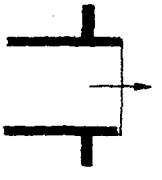

$K = 1.0$

Sharp-Edged

$K = 1.0$

Rounded

$K = 1.0$

By: JJB 10/26/01
Chkd: EG 10/30/01

Friction Factors for Clean Commercial Steel Pipe[18]

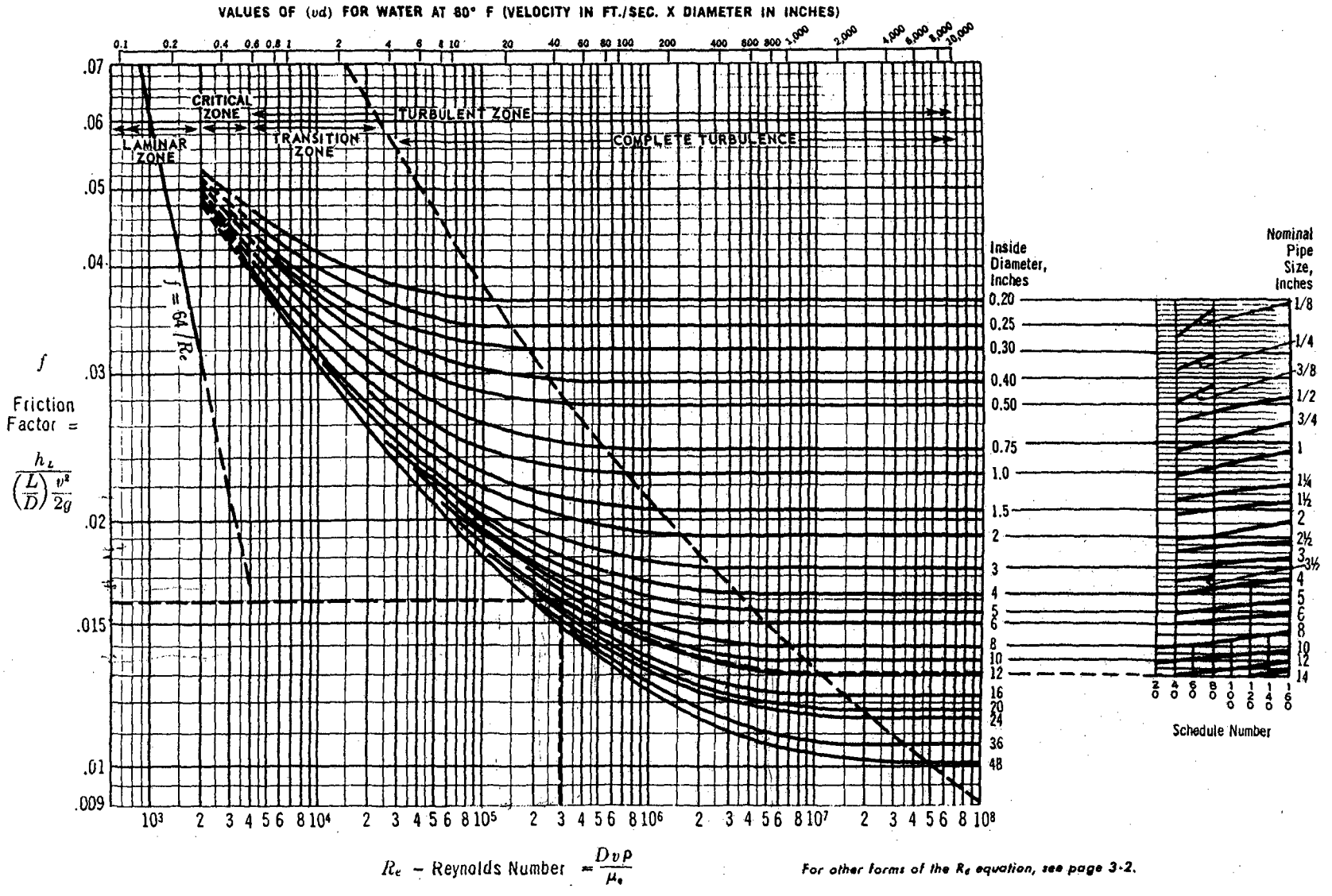

For other forms of the R_e equation, see page 3-2.

Problem: Determine the friction factor for 12-inch Schedule 40 pipe at a flow having a Reynolds number of 300,000.

Solution:
The friction factor (f) equals 0.016.

16/27

By: JJB 4/29/09
Chk'd EG 10/30/09

WESTFALL INJECTION MIXER - HEAD LOSS

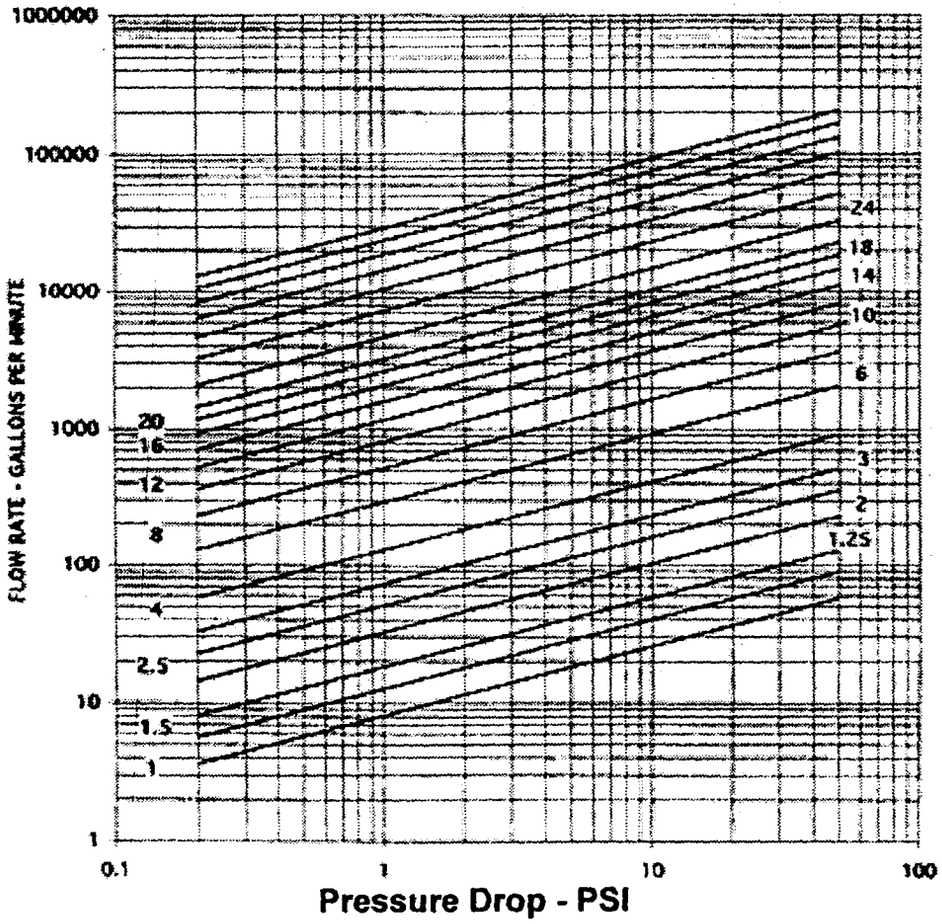

By: JJB 10/29/01
Cited 66 10/30/01

18/27

Corporate Office: [redacted]

Electric Drive Dri-Prime® Pumps

Quick-Select Menu:
Products
Diesel Dri-Prime™ Pumps
Electric Dri-Prime™ Pumps
Sound Attenuated Dri-Prime™ Pumps
Hydraulic Submersible Pumps
Electric Submersible Pumps
More Pumps
Rentals
Dri-Prime™ Pumps
More Pumps
Pipe, Hose, Fittings
Bauer Pipe
HDPE, Fusion Machine
Generators, Light Towers, Compressors
Services
Locations
Applications
News
Career Opportunities
Request Information

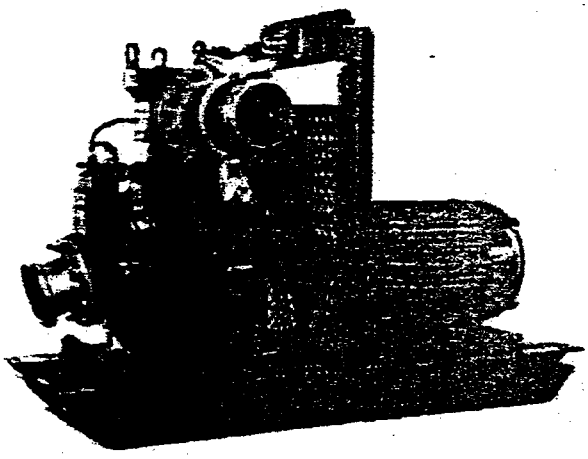

Dri-Prime automatic self-priming pumps offer reliable, low maintenance, continuous pumping in a Godwin electric drive pump. And permanently installed Dri-Prime's open a brand new market for self-priming pumps. Electric drive Dri-Prime pumps can be customized for your permanent installation using a wide range of speeds and impeller trims in the CD (solids-handling, low head) or HL (high head) ranges of the Dri-Prime pump series. The Godwin Pump is also built to higher specifications than the competition, resulting in long wearing, reliable duty - unmatched by any self-primer before. Reduce your operating and maintenance costs today using the energy-efficient Godwin Dri-Prime electric drive pump system.

Download P in Adobe

Dri-Prime® is a registered trademark of Godwin Pumps of America, Inc.
© Copyright. 2001 Godwin Pumps of America, Inc. - All Rights Reserved.

P-101

Godw
By: JJB 10/29/01
Chkd EG 10/30/01

19/27

CD150M Dri-Prime® Pump

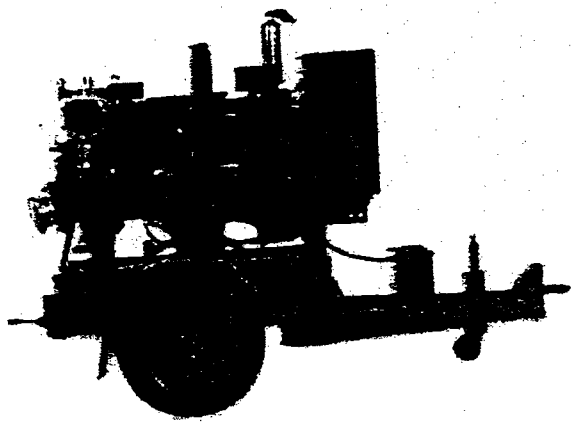

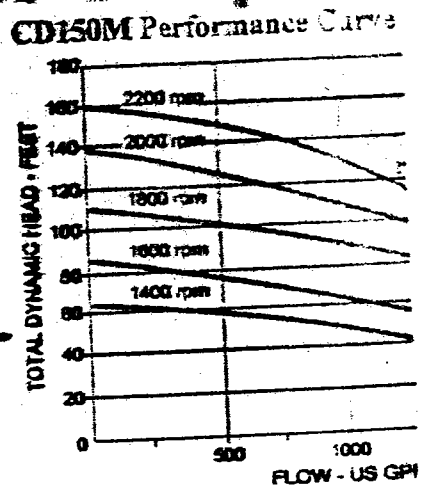

Quick-Select Menu
Products
Diesel Dri-Prime® Pumps
Electric Dri-Prime® Pumps
Sound Attenuated Dri-Prime® Pumps
Hydraulic Submersible Pumps
Electric Submersible Pumps
More Pumps
Rentals
Dri-Prime® Pumps
More Pumps
Pipe, Hose, Fittings
Bauer Pipe
HDPE, Fusion Machine
Generators, Light Towers, Compressors
Services
Locations
Applications
News
Career Opportunities
Request Information

The Godwin Dri-Prime®6" CD150M automatic priming centrifugal pump is clearly the backbone of the temporary portable pumping industry. With solids-handling to 3" in diameter, maximum flows of 1700 gallons per minute and 160 feet of total dynamic head, and indefinite dry-running capabilities, the CD150M can be found in a wide variety of applications from straight dewatering to sewage bypassing. Mounted on a highway trailer, the CD150M is the most maneuverable and versatile portable pumping system available, making it a favorite of contractors, municipalities, industry and environmental companies across the country.

Pump Specifications

Download Pump Spec in Adobe Acrobat F

godwin pumps

Home Page

Dri-Prime® is a registered trademark of Godwin Pumps of America, Inc.
© Copyright, 2001 Godwin Pumps of America, Inc. - All Rights Reserved.

CD150M Dri-Prime® Pumps

By: JJB 10/29/01
Chk'd EG 10/30/01

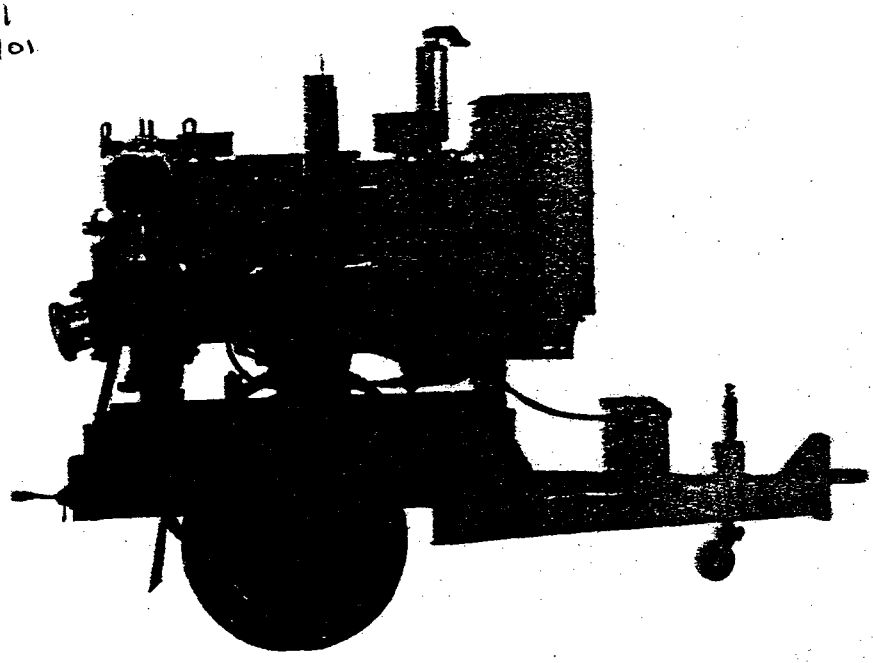

The Godwin Dri-Prime 6" CD150M automatic priming centrifugal pump is clearly the backbone of the temporary portable pumping industry. With solids-handling to 3" in diameter, maximum flows of 1700 gallons per minute and 160 feet of total dynamic head, and indefinite dry-running capabilities, the CD150M can be found in a wide variety of applications from straight dewatering to sewage bypassing. Mounted on a highway trailer, the CD150M is the most maneuverable and versatile portable pumping system available, making it a favorite of contractors, municipalities, industry and environmental companies across the country.

Features

- Close coupled centrifugal pump with vacuum priming compressor mounted to a diesel engine. Also available in electric drive or as bare shaft pumpend.
- All cast iron construction with cast chromium steel impeller.
- Extensive application flexibility — will handle raw sewage, slurries and liquids with solids up to 3" in diameter.
- Continuously operated "Godwin" patented air ejector priming device requiring no periodic adjustment or control.
- Dry running, oil bath, mechanical seal with abrasion resistant solid silicon carbide interfaces.
- Solids handling ball type Non Return Valve with renewable flexible rubber seat and quick release access feature.
- Compact unit mounted on skid base or two wheeled highway trailer both incorporating integral overnight running fuel tank.
- Simple maintenance — normally confined to checking engine and seal cavity oil levels.
- Standard John Deere 4045D or Caterpillar 3054NA engine. Also available with a variety of other engines including Hatz, Perkins and Deutz.
- Super-quiet critical silence pack version available for use in residential communities.

godwin pumps

By: JJB 10/29/01 Chkd EG 10/30/01

CD150M Performance Curve

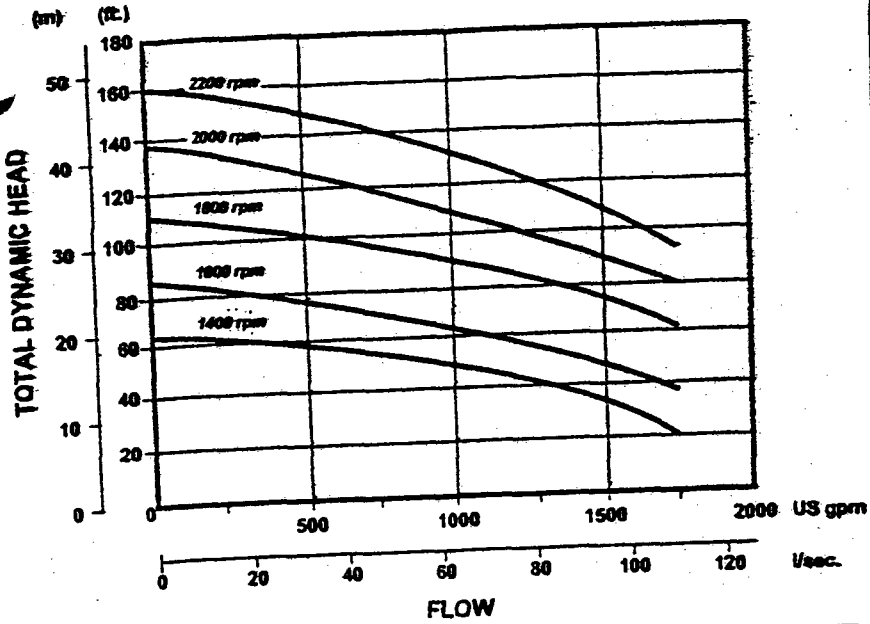

Performance Table

Diesel Set: John Deere 4045D, 71 hp @ 2200 rpm
Caterpillar 3054NA, 74 hp @ 2200 rpm

Impeller Diameter — 10.8"

Total Suction Head — Feet	Total Delivery Head — Feet: 10	20	30	40	50
	Output — GPM				
10	1960	1900	1850	1800	1680
15	1850	1810	1700	1520	1400
20	1670	1590	1500	1380	1240
25	1500	1400	1340	1240	1100

Performance data listed in table and curves are based on water tests at sea level and 68° F (20° C). Larger diameter pipes may be required for maximum flows.

Dimensions

CD150M — shown with John Deere 4045D, GP60 Highway Trailer
Weight: 3200 lbs.

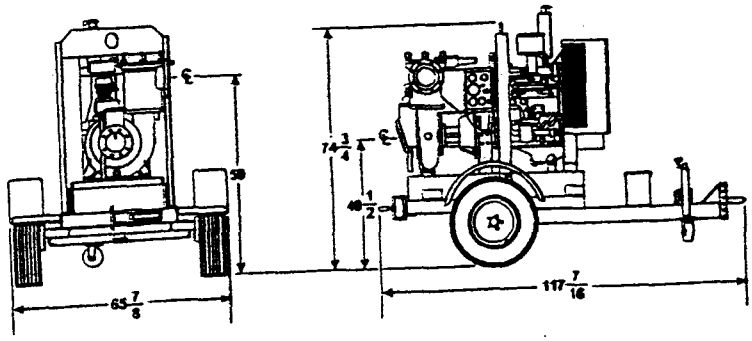

All dimensions listed in inches.

Specifications

Maximum Operating Speed:
2200 rpm
Maximum Operating Temperature:
+212° F (100° C)
Maximum Working Pressure:
58.5 psi
Maximum Suction Pressure:
40.0 psi
Maximum Casing Test Pressure:
88.0 psi
Fuel Tank Capacity:
60 to 100 gallons (60 gallon standard)
Fuel Consumption (full load):
John Deere 4045D: 3.32 gph @ 2200 rpm
Caterpillar 3054NA: 4.3 gph @ 2200 rpm
Pipe Connections:
6" ASA 150#
Solids Handling:
3" dia., standard impeller

Materials

Pump Casing, Suction Cover, Separation Tank and Wearplates:
Close grained cast iron
Impeller:
Cast chromium steel hardened to minimum Brinell 341 HB
Shaft:
1-1/2% nickel/chromium steel
Non Return Valve Body, Ejector Housing:
Close-grained cast iron
Non Return Valve – Ball and Seat:
High nitrile rubber
Mechanical Seal Faces:
Solid silicon carbide

godwin pumps

One Floodgate Road, Bridgeport, NJ 08014
Tel: (856) 467-3636 • Fax: (856) 467-4841
E-mail: sales@godwinpumps.com
www.godwinpumps.com

BRANCH LOCATIONS:
Norwich, CT • Buffalo, NY • Chicago, IL
Washington, DC • Richmond, VA • Virginia Beach, VA • Charleston, WV • N. Charleston, SC
Atlanta, GA • Houston, TX • Raleigh, NC

Dri-Prime® is a registered trademark of Godwin Pumps of America, Inc.
Specifications and illustrations are subject to revision without notice.
© Copyright 2001. Godwin Pumps of America, Inc. All rights reserved.

GP-SL.018.601

By: 18/29/01 JOB
Chkd EG-10/30/01

22/27

goodwin pumps

PUMP TYPE CD150M	
CURVE No. CD150M-11A	DATE 22.12.99.
BRANCH SIZES 6" x 6"	SPEED RPM VARIABLE

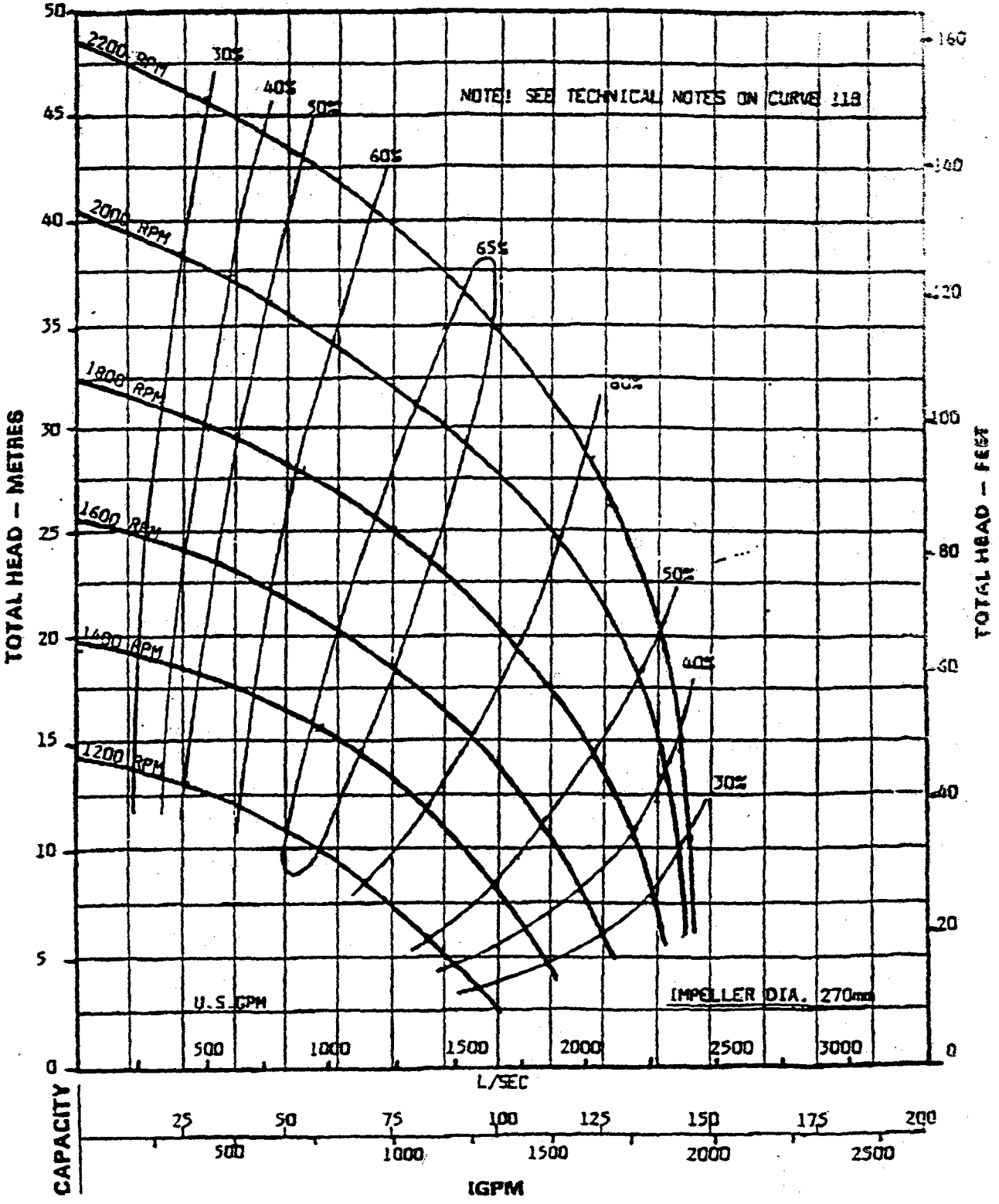

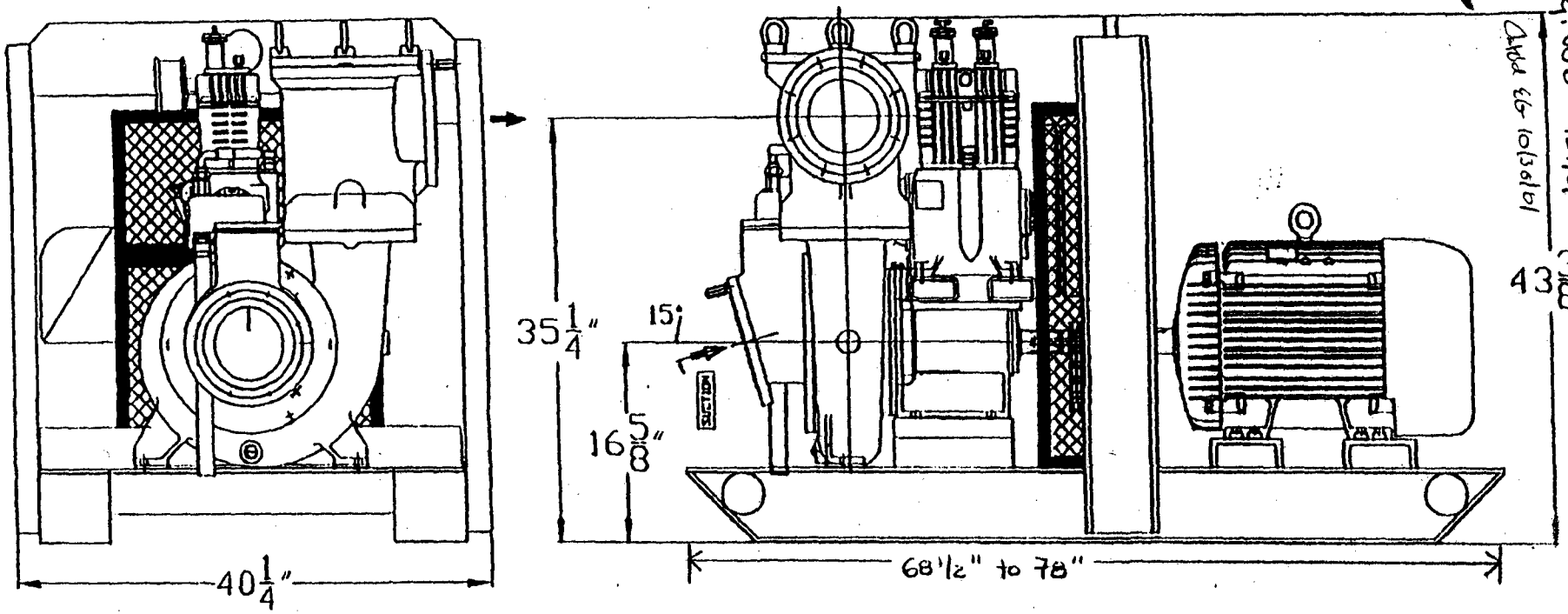

Notes:

1. Dimensions are in inches.
2. Do not scale drawing.
3. Drawing is not for construction.
   Consult factory for certified dimensions.
4. Suction and discharge flanges are 6" - 150#.

godwin pumps of America, Inc.

RENTAL • SALES • SERVICE

DATE 6/13/97

SIZE C

©Copyright 1997, Godwin Pumps of America Inc.

By: JJB 12/24/01
Chkd EG 10/30/01

241a

PLAN NOTES

1. BASE MAP COMPILED AND CONTROLLED BY PHOTOGRAMMETRIC METHODS FROM AERIAL PHOTOGRAPHS CONDUCTED BY JAMES W. SEWALL COMPANY OF OLD TOWN, MAINE ON DECEMBER 02, 1998.
2. BATHYMETRY IS BASED ON HYDROGRAPHIC SURVEY CONDUCTED BY THE U.S. ARMY CORPS OF ENGINEERS IN FEBRUARY AND MARCH 1999.
3. PROPERTY BOUNDARY AND EASEMENT DATA TAKEN FROM PLAN ENTITLED "PLAN OF LAND COGGESHALL, MITCHELL AND SAWYER STREET PROPERTIES - NEW BEDFORD, MASSACHUSETTS FOR FOSTER WHEELER ENVIRONMENTAL CORPORATION", DATED JUNE, 02 1999 BY SAI SURVEYING CORPORATION OF JAMESTOWN, RHODE ISLAND.
4. EXISTING UTILITY LOCATIONS DEPICTED AND NOTED HEREON ARE TO BE CONSIDERED APPROXIMATE.

LEGEND:

- EXISTING INDEX CONTOUR
- EXISTING INTERMEDIATE CONTOUR
- EXISTING SPOT ELEVATION
- EASEMENT LINE
- EXISTING CHAIN LINK FENCE
- EDGE OF PAVEMENT
- S 01°40'24" E — BOUNDARY BEARING & DIRECTION
- EXISTING WATER SERVICE
- EXISTING GAS SERVICE
- EXISTING OVERHEAD UTILITY SERVICE LINES
- FIRE HYDRANT
- UTILITY POLE
- LIGHT
- NAIL FOUND
- CATCH BASIN
- SIGN
- VALVE
- WATER VALVE
- TREE
- MANHOLE
- SEWER MANHOLE
- DRAIN MANHOLE
- GAS MANHOLE
- ELECTRIC MANHOLE
- TELEPHONE MANHOLE
- BOLLARD

PROPERTY BOUNDARY LINE TABLE		
LINE	DIRECTION	DISTANCE
L1	N 08°57'38" W	22.40'
L2	S 08°52'44" E	3.00'
L3	N 81°07'16" E	21.95'

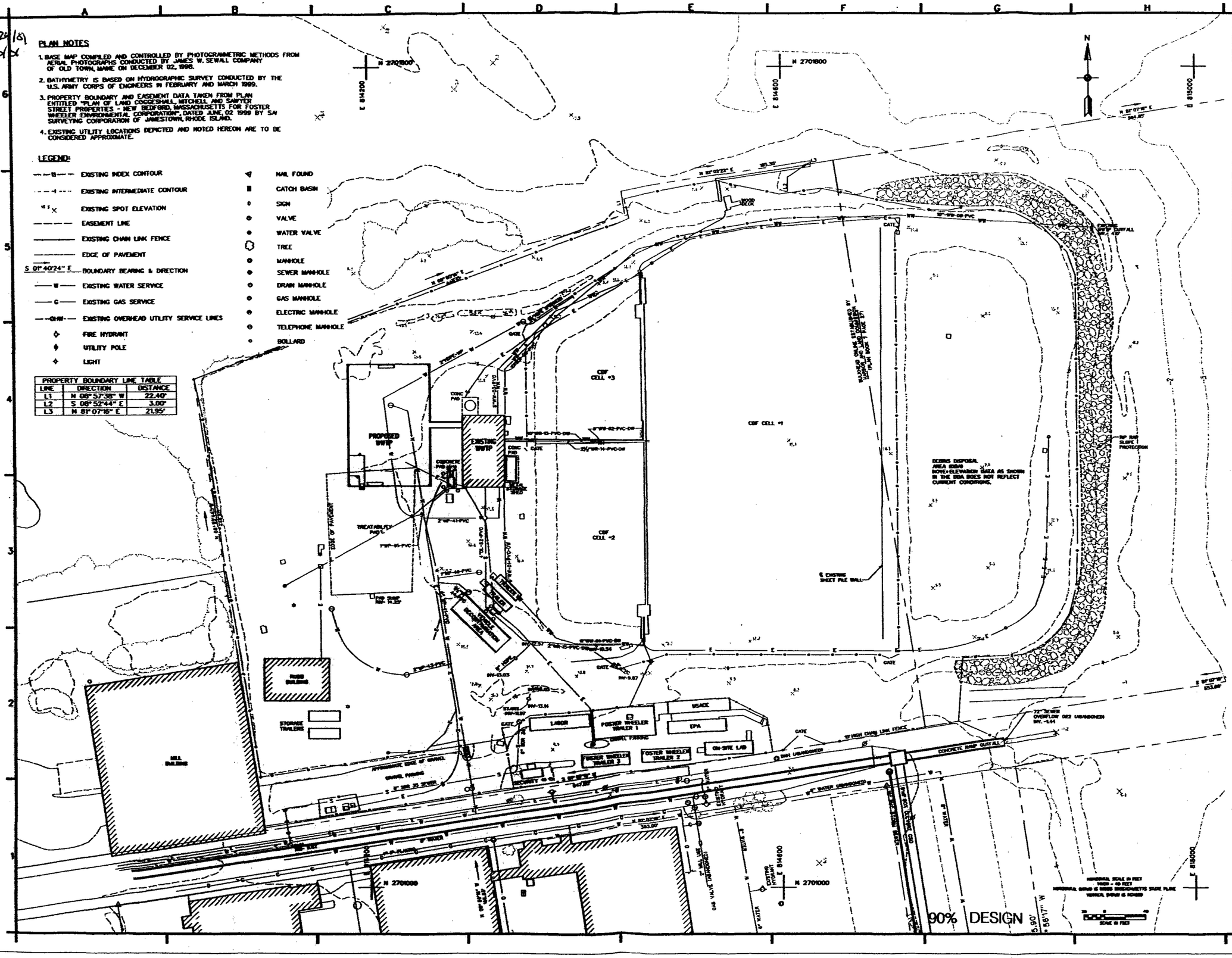

25/27

Ck: JJB 10/29/01
Ck'd EG 10/30/01

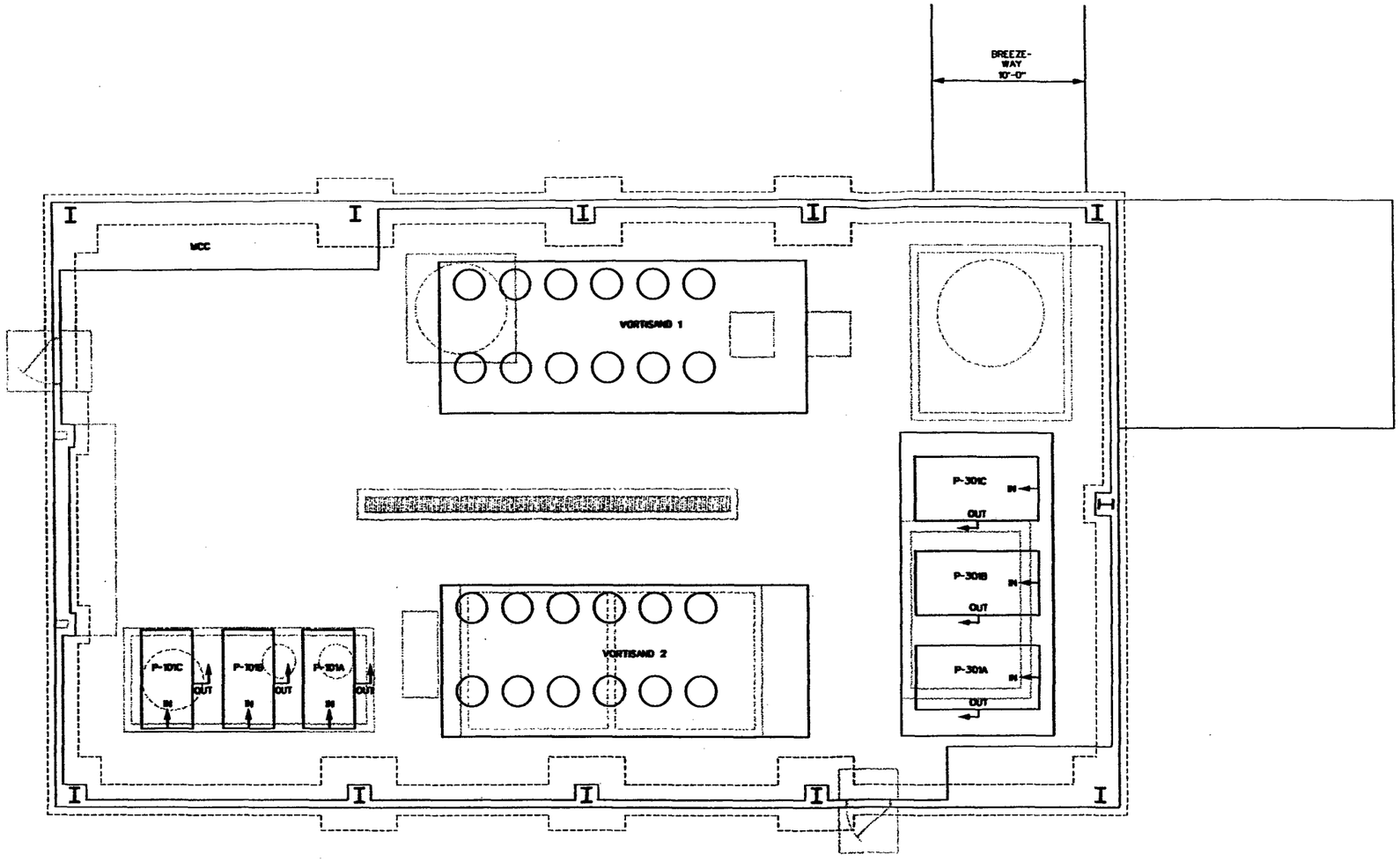

FLOOR PLAN

SCALE 1/4"=1'-0"

US Army Corps of Engineers
New England District

Symbol	Description	Date	Appr.

Rev. A
Date 10/31/01
Design file no. 17A010-3.DGN
Drawing code
File name
Plot date
Plot scale

Designed by
Drawn by C.A.P.
Reviewed by
Submitted by

U.S. ARMY ENGINEER DISTRICT
CORPS OF ENGINEERS
CONCORD, MASSACHUSETTS

FOSTER WHEELER ENVIRONMENTAL CORP.
133 FEDERAL STREET
BOSTON, MASSACHUSETTS

NEW BEDFORD HARBOR SUPERFUND SITE
NEW BEDFORD, MASSACHUSETTS
WASTEWATER TREATMENT PLANT

GENERAL ARRANGEMENT/
EQUIPMENT LAYOUT
FEED PUMPS (EXISTING WTP)

Reference number:
M-101
Sheet 9 of 27

JOB
By: 10/29/01
Chkd EG-10/30/01

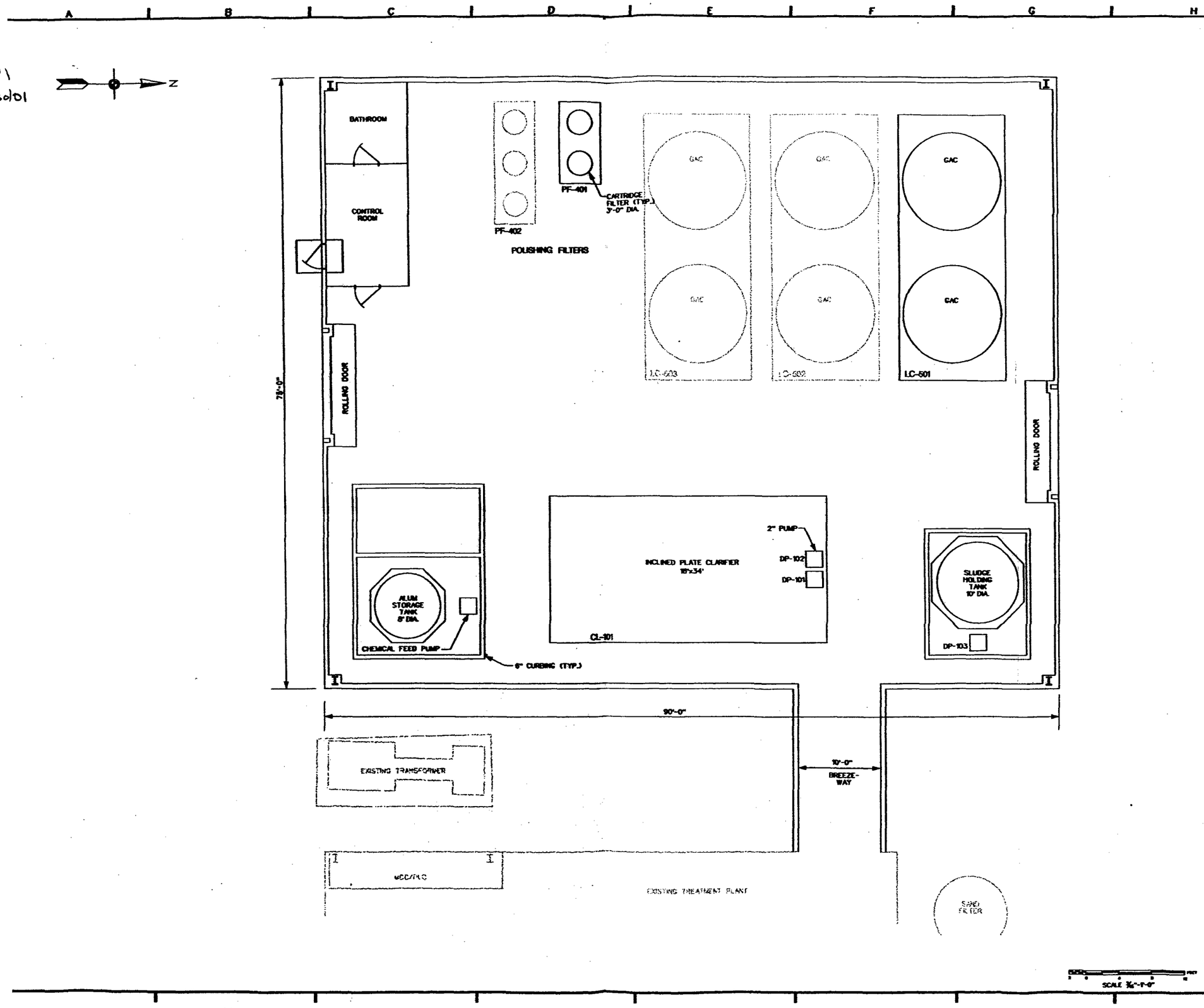

US Army Corps of Engineers
New England District

U.S. ARMY ENGINEER DISTRICT
CORPS OF ENGINEERS
CONCORD, MASSACHUSETTS

FOSTER WHEELER ENVIRONMENTAL CORP.
BOSTON, MASSACHUSETTS

NEW BEDFORD HARBOR SUPERFUND SITE
NEW BEDFORD, MASSACHUSETTS
WASTEWATER TREATMENT PLANT

GENERAL ARRANGEMENT / EQUIPMENT LAYOUT
PROCESS EQUIPMENT

Reference number:
M-102
Sheet 10 of 27

Begin JTB 8/29/01
Chk'd 10/30/01

7/27

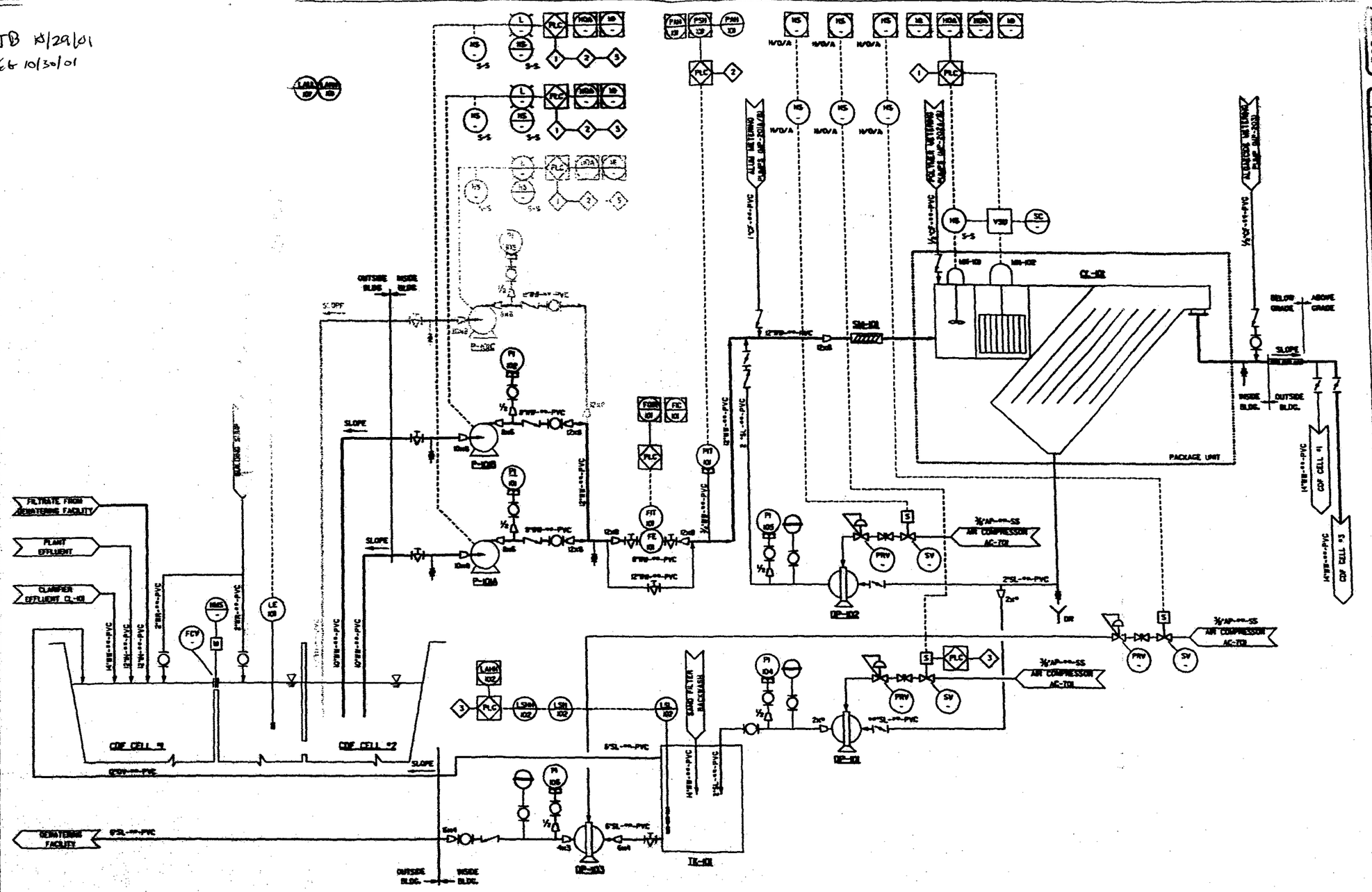

CDF CELL #1
SURGE BASIN
4,500,000 GALLONS

CDF CELL #2
FILTRATE EQUALIZATION BASIN
600,000 GALLONS

P-101A/B/C
CLARIFIER FEED PUMPS
1,000 GPM @ 40 FT. TDH
60 HP, 2200 RPM
3 ϕ, 460 V
VARIABLE FREQUENCY DRIVE

DP-103
SLURRY TRANSFER PUMP
** GPM @ ** TO ** PSI

TK-101
SLURRY HOLDING TANK
5,000 GAL.

DP-102
SLURRY RECYCLE PUMP
** GPM @ 0 TO 40 PSI

DP-101
CLARIFIER SLURRY TRANSFER PUMP
** GPM @ 0 TO 40 PSI

SM-101
STATIC MIXER

MIX-101
FLASH MIXER
½ HP

MIX-102
FLOCCULATOR MIXER
½ HP
VARIABLE SPEED DRIVE

CL-101
INCLINED PLATE CLARIFIER

AUG 21, 2001 ON BOARD REVIEW

US Army Corps of Engineers
New England District

U.S. ARMY ENGINEER DISTRICT
CORPS OF ENGINEERS
CONCORD, MASSACHUSETTS

FOSTER WHEELER ENVIRONMENTAL CORP.
4700 ATLANTIC AVENUE
BOSTON, MASSACHUSETTS

NEW BEDFORD, MASSACHUSETTS
WASTEWATER TREATMENT PLANT

PIPING AND INSTRUMENTATION DIAGRAM
CLARIFIER

Reference number:
M-602
Sheet of

CALCULATION COVER SHEET

PROJECT New Bedford Harbor Superfund Site OU#1

SUBJECT Filtration Feed Pump (P-301) Sizing

CLIENT U.S. Army Corps of Engineers – New England District (USACE – NED)

CALCULATION NO. P-05 PROJECT NO. 5197.1720.3392

NO OF SHEETS _____ DESIGN LEVEL _____

CALCULATION BY OTHERS _____ YES _____ NO

PREPARER J. Brinkman

REVIEWED BY E. [illegible] DATE 6/20/02

ASSUMPTIONS THAT REQUIRE CONFIRMATION _____ YES _____ NO

ASSUMPTIONS CONFIRMED BY _____ DATE _____

PRINT NAME, DATE AND INITIAL

Rev No	Affected Sheets	Prepared by Date	Checked by Date	Verified by Date

I. Scope and Purpose

Determine the head requirements for the Sand Filter Feed Pumps (P-301 A/B/C). Head loss requirements are to be determined for a single pump operating at 1,000 gpm and two (2) pump operating in parallel at 2,000 gpm.

II. References

1. Literature:

   a) Flow of Fluids Through Valves, Fittings, and Pipe (Technical Paper No.410), Crane Company, 1988, 25th Printing (1991).

   b) Tiller, Frank, Theory and Practice of Solid Liquid Separation University of Houston Chemical Engineering Department, 1975.

2. Documents:

   a) "Draft Basis of Design/Design Analysis (BA/DA) Report for Water Treatment System, New Bedford Harbor Superfund Site", November 2001. USACE Contract # DACW33-94-D-0002, Task Order #17

   b) Drawing C-101: Site Layout

   c) Drawing M-101: General Arrangement/Equipment Layout – Feed Pumps (Existing WTP)

   d) Drawing M-102: General Arrangement/Equipment Layout – Process Equipment

   e) Drawing D-601: Process Flow Diagram and Mass Balance

   f) Drawing M-602: Piping and Instrumentation Diagram – Sand Filtration

   g) Drawing M-603: Piping and Instrumentation Diagram – Polishing Filtration/Carbon Adsorption

   h) Godwin Pump Performance Curves and Vendor Information

   i) Cuno Filters Vendor Letter and Information

   j) Calgon Carbon Corporation, Model 10

   k) Wastewater Resources, Inc. "Multimedia Pressure Filtration Systems"

III. Assumptions

- Flow rate variable from 700 gpm to 2,000 gpm
- Discharge Pipe of 12" from carbon vessels
- At flowrates less than 700 gpm WTP effluent will be discharge through existing 10" PVC pipe
- At flows greater than 1,000 gpm a 14" HDPE aboveground pipe will be utilized
- Suction pipe is 8" in diameter
- Assume schedule 40 steel pipe, which will result in conservative pressure drop values compared to PVC pipe that will be used.
- Assume pipe routing is based on equipment general arrangements shown in Drawings M-101 and M-102.
- Assume the level in CDF Cell #3 is near minimum value (elevation 7 feet) to provide a conservative value for the static lift required.
- Assume pressure drops of the sand and polishing filtration systems operate at 75% of the maximum expected pressure drop value.

Solution

To determine pump head requirements use Bernoulli's Theorem (Equation #1) to construct system curves.

Equation #1 $$\Delta H = \Delta P(144/\rho) + \Delta Z + \frac{(V_2^2 - V_1^2)}{2g} + h_L$$ Crane p. 3-2

where: ΔH = total head difference, ft (H_2O)
ΔP = total pressure difference, lbs/in^2 (psi)
ρ = density of fluid, lbs/ft^3
ΔZ = difference static head, ft
V = velocity, ft/sec
g = acceleration of gravity, 32.2 ft/s^2
h_L = frictional head loss, ft (Equation #2)

Friction Losses (h_L):

Equation #2 $$h_L = \frac{0.00259KQ^2}{d^4}$$ Crane p. 3-4

where: K = resistance coefficient
Q = flowrate, gpm
d = diameter of pipe, inches

Resistance Coefficient (K):

Defined in Table 1. K-factor for pipe fittings are taken from Crane Appendix A (pgs A-26 through A-29).

Pipe sizes and estimated lengths based on design drawings (attached) are provided in Table 2.

Schematic of pump flow diagram is presented in Figure 1.

Table 1 – K-Factors for Pipe Fittings

Location	Elements Effecting P In Pipe	Quantity	Element K-Factor	f_T	Extended K-Factor
Suction	Entrance	1	0.78		0.78
	8" plug valve	1	$18f_T$	0.014	0.25
	8" 45° elbows	3	$16f_T$	0.014	0.672
	8" 90° elbows	2	$30f_T$	0.014	0.84
	8x 6 Reducer	1	0.6		0.6
Discharge	6x 8 enlargement	1	0.6		0.6
	8" check valve (swing)	1	$50f_T$	0.014	0.7
	8" Ball Valve (full port)	1	$3f_T$	0.014	0.042
	8" plug valve	4	$18f_T$	0.014	1.0
	8x12 enlargement	6	1.55		9.3
	12x8 reducer	2	1.55		3.1
	12" elbows	10	$30f_T$	0.013	3.9
	8" elbows	10	$30f_T$	0.014	4.2
	14" elbows	10	$30f_T$	0.013	3.9
	12x14 enlargement	1	0.13		0.13
	Exit	1	1.0		1.0

Where:

f_T = friction factor in zone of complete turbulence

K-Factor for reducers/enlargements calculated using Formula 3 (Cranes, pg. A-26)

Table 2 – Pipe Sizes and Lengths

Location	Size (inches)	Origin	Terminate	Length (feet)
Suction	8	CDF Cell #3	P-301	110
Discharge	8	P-301	Discharge Manifold	10
Discharge	12	P-301 Discharge Manifold	Sand Filter Influent (SF-02)	35
Discharge	8	Sand Filter Influent (SF-02)	Sand Filter Influent (SF-01)	20
Discharge	8	Sand Filter Influent (SF-01)	Sand Filter System (SF-01)	10
Discharge	8	Sand Filter Influent (SF-02)	Sand Filter System (SF-02)	10
Discharge	8	Sand Filter System (SF-01)	Sand Filter Discharge Manifold	10
Discharge	8	Sand Filter System (SF-02)	Sand Filter Discharge Manifold	20
Discharge	12	Sand Filter Discharge Manifold	Polishing Filter Influent Manifold	150
Discharge	8	Polishing Filter Influent Manifold	Polishing Filter Feed	15
Discharge	12	Polishing Filter Discharge Manifold	GAC Manifold	30
Discharge	8	GAC Discharge	GAC Manifold	10
Discharge	12	GAC Manifold	Discharge Line	25
Discharge	10	Discharge Line	Outfall	800
Discharge	14	Discharge Line	Outfall	800

1. PIPE

a) Determine resistance coefficient (K) for pipe

Equation #3 $K = f(L/D)$ Crane p. 3-4

Where:

f = friction factor based on reynolds number (R_e)
L = Length of pipe, feet
D = pipe diameter, feet

Equation #4 Reynolds Number (R_e) = 50.6($Q\rho/d\mu$)

Where:

Q = rate of flow, gpm
ρ = weight density of fluid, lbs/ft^3
d = internal diameter of pipe, inches
μ = absolute (dynamic) viscosity, centipoise

i) For 8" Pipe

R_e (@ 700 gpm) = 50.6(700*62.37)/(8*1.129) = 244,591

R_e (@ 1,000 gpm) = 50.6(1,000*62.37)/(8*1.129) = 349,416

Friction factors (f) from Cranes Appendix A (A-25) for 8" pipe

f (@700 gpm) = 0.017

f (@1,000 gpm) = 0.0165

ii) For 10" Pipe

R_e (@ 700 gpm) = 50.6(700*62.37)/(10*1.129) = 195,673

R_e (@ 1,000 gpm) = 50.6(1,000*62.37)/(10*1.129) = 279,533

Friction factors (f) from Cranes Appendix A (A-25) for 10" pipe

f (@700 gpm) = 0.017

f (@1,000 gpm) = 0.0165

iii) For 12" Pipe

R_e (@ 700 gpm) = 50.6(700*62.37)/(12*1.129) = 163,061

R_e (@ 1,000 gpm) = 50.6(1,000*62.37)/(12*1.129) = 232,944

R_e (@ 2,000 gpm) = 50.6(2,000*62.37)/(12*1.129) = 465,888

Friction factors (f) from Cranes Appendix A (A-25) for 12" pipe

f (@700 gpm) = 0.017

f (@1,000 gpm) = 0.0165

f (@2,000 gpm) = 0.0155

iv) 14" Pipe

R_e (@ 700 gpm) = 50.6(700*62.37)/(14*1.129) = 139,766

R_e (@ 1,000 gpm) = 50.6(1,000*62.37)/(14*1.129) = 199,666

R_e (@ 2,000 gpm) = 50.6(2,000*62.37)/(14*1.129) = 399,332

Friction factors (f) from Cranes Appendix A (A-25) for 14" pipe

f (@700 gpm) = 0.017

f (@1,000 gpm) = 0.0165

f (@2,000 gpm) = 0.0155

b) Determine Resistance Coefficient (K) for pipe at various flows (pipe lengths from Table 2)

i) 8" Pipe

K (@700 gpm) = 0.017*(215/(8/12)) = 5.48

K (@1,000 gpm) = 0.0165*(215/(8/12)) = 5.32

ii) 10" Pipe

K (@700 gpm) = 0.017*(800/(10/12)) = 16.32

K (@1,000 gpm) = 0.0165*(800/(10/12)) = 15.84

iii) 12" Pipe

K (@700 gpm) = 0.017*(240/(12/12)) = 4.08

K (@1,000 gpm) = 0.0165*(240/(12/12)) = 3.96

K (@2,000 gpm) = 0.0155*(240/(12/12)) = 3.72

iv) 14" Pipe

K (@700 gpm) = 0.017*(800/(14/12)) = 11.66

K (@1,000 gpm) = 0.0165*(800/(14/12)) = 11.31

K (@2,000 gpm) = 0.0155*(800/(14/12)) = 10.63

2. Pipe and Fittings

a) Determine K-factors for 8", 10", 12" and 14" pipe and fittings

i) 8" Pipe

K (@700 gpm) = (0.78 + 0.25 + 0.672 + 0.84 + 0.6 + 0.7 + 0.042 + 1.0 + 9.3 + 4.2) + 5.48

K (@700 gpm) = 23.86

K (@1,000 gpm) = (18.38) + 5.32

K (@1,000 gpm) = 23.7

ii) 10" Pipe

K (@700 gpm) = (4.2 + 1) + 16.32 = 21.52

K (@1,000 gpm) = (5.2) + 15.48 = 20.68

iii) 12" Pipe

K (@700 gpm) = (9.3 + 3.1 + 3.9 + 0.13) + 3.23 = 19.66

K (@1,000 gpm) = (16.43) + 3.14 = 19.57

K (@2,000 gpm) = (16.43) + 2.95 = 19.38

iv) 14" Pipe

K (@1,000 gpm) = (3.9 + 1.0) + 11.31 = 16.21

K (@2,000 gpm) = (4.9) + 10.63 = 15.36

3. Frictional Head loss for one (1) pump operating (pipe & fittings)

Equation #6 $h_L = h_{L\,(8\text{ inch})} + h_{L\,(10\text{ inch})} + h_{L\,(12\text{ inch})}$

$$h_{L\,(700\text{ gpm})} = \frac{0.00259KQ^2}{d^4} + \frac{0.00259KQ^2}{d^4} + \frac{0.00259KQ^2}{d^4} =$$

$$h_{L\,(700\text{ gpm})} = \frac{0.00259(23.86)(700)^2}{(8)^4} + \frac{0.00259(21.52)(700)^2}{(10)^4} + \frac{0.00259(19.66)(700)^2}{(12)^4}$$

$$= 7.39 + 2.73 + 1.20 = 11.32$$

$$h_{L\,(1,000\text{ gpm})} = \frac{0.00259(23.7)(1,000)^2}{(8)^4} + \frac{0.00259(20.68)(1,000)^2}{(10)^4} + \frac{0.00259(19.57)(1,000)^2}{(12)^4}$$

$$= 14.99 + 5.36 + 2.44 = 22.79$$

4. Frictional Head Loss for two (2) pumps running in parallel

- assume flowrate on suction side of pumps is equal
- Assume all 8" components receive ½ total flow for head loss calculations
- Use flowrates of 1,400 gpm and 2,000 gpm
- Interpolate K-factor for 12" pipe between 1,000 and 2,000,
- Assume when dual pumps are running at 1,400 gpm each individual pump flow is at 700 gpm

h_L (@1,400 gpm) = $h_{L\,(8\text{ inch})}$ (@700 gpm) + $h_{L\,(12\text{ inch})}$ (@1,400 gpm) + $h_{L\,(14\text{ inch})}$ (1,400)

determine k values for 12"and 14" pipe components. Interpolate between K @ 1,000 gpm and K @ 2,000 gpm for both the 12" and 14" pipe.

$K_{12\ inch}$(1,400 gpm) = 19.57 - ((19.57 – 19.38)/(2,000 – 1,000))(1,400 – 1000)

= 19.49

$K_{14\ inch}$(1,400 gpm) = 16.21 - ((16.21 – 15.36)/(2,000 – 1,000)(1,400 – 1000)

= 15.87

Therefore, from above equations:

h_L(@1,400gpm)=$h_{L(8")}$(@700 gpm+$h_{L(12")}$(@1,400gpm)+$h_{L(14")}$ (@1,400gpm)

= 7.39 + 4.77 + 2.1 = 14.26

h_L(@2,000gpm)=$h_{L(8")}$(@1,000gpm)+$h_{L(12")}$(@2,000 gpm)+$h_{L(14")}$(@2,000gpm)

= 14.99 + 9.68 + 4.14 = 28.81

5. Process Equipment Head Losses

Determine Head Losses Through Process Equipment (sand filters, polishing filters, and GAC)

The maximum expected head losses for each piece of equipment could occur at any expected flowrate. For the sand filters and polishing filters the maximum expected differential pressure is determined by vendor recommended set points. For the sand and polishing filters assume pressure drop of each are approximately 75% of maximum recommended values. Assume pressure drop in short 6" and 8" branch pipe runs are negligle. (Note all losses through valves and fittings have been included previously.

Sand Filter

Reference: Vendor literature indicates "suggested pressure drop range" of 8 psig to 20 psig. Assuming approximately 75% of the maximum value: 0.75 x 20 psig

$H_{sand\ filter}$ = 15 psig = 34.7 feet

Polishing Filter

Vendor data from CUNO Filters indicates they should be changed at 20 psi differential pressure.

$H_{polishing\ filter}$ = 15 psig = 34.7 feet

GAC

There will be two (2) GAC vessels operating in series.for every 700 gpm of flow. From vendor data sheet pressure drop across two vessels in series = 20 feet.

Total head loss for equipment , h_e

h_e = 34.7 ft + 34.7 ft + 20 ft = 89 feet

Total Head Losses for Single Pump Operating at Various Flow rates

H_{700} = -3 ft + 11.32 + 89 ft = 97 feet

$H_{1,000}$ = -3 ft + 22.79 + 89 ft = 109 feet

Total Head Losses for Dual Pumps Operating at Various Flowrates

$H_{1,400}$ = -3 ft + 14.26 + 89 ft = 100 feet

$H_{2,000}$ = -3 ft + 28.81 + 89 ft = 115 feet

Add 20% Contingency:

Total Head Losses for Single Pump Operating at Various Flow rates

H_{700} = 97 ft + 19.4 ft = 116.4 feet

$H_{1,000}$ = 109 ft + 23 = 127 feet

Total Head Losses for Dual Pumps Operating at Various Flowrates

$H_{1,400}$ = 100 ft + 20 = 120 feet

$H_{2,000}$ = 115 ft + 23 ft = 138 feet

STATIC HEAD LOSS (ΔZ)

ΔZ = DISCHARGE ELEVATION - SUCTION ELEVATION

= 4 - 7 = -3 FT

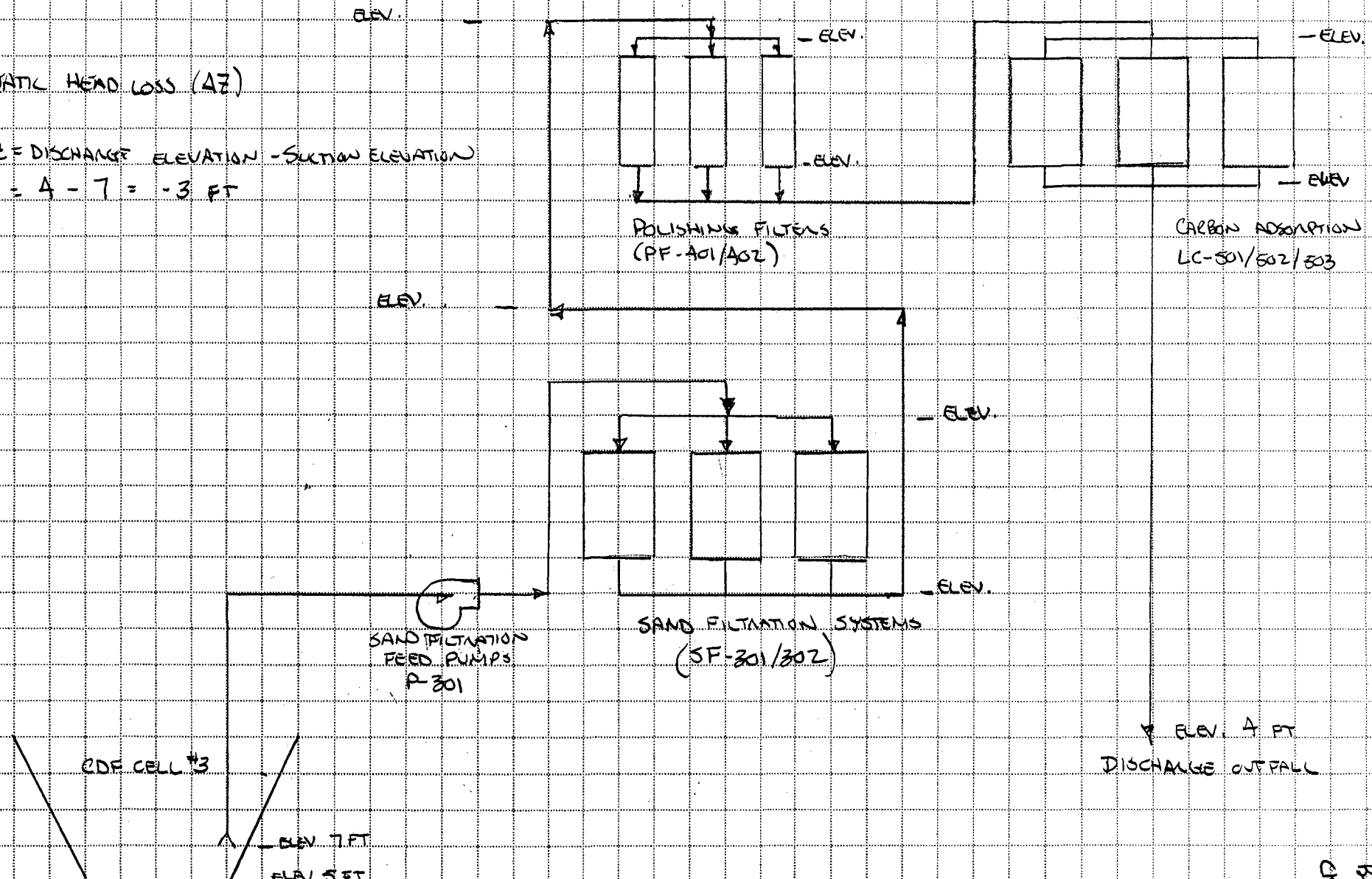

SIMPLIFIED PUMP FLOW DIAGRAM
FOR SAND FILTRATION FEED PUMPS

Rev. JJB 10/29/01
Ckd. EG 6/20/02

12/27

FOSTER WHEELER

FORM 6906-5

13/27

By: JJD 10/29/01
Ckd: EG 6/20/02

Summary of Formulas

To eliminate needless duplication, formulas have been written in terms of either specific volume $\overline{V}$ or weight density ρ, but not in terms of both, since one is the reciprocal of the other.

$$\overline{V} = \frac{1}{\rho} \qquad \rho = \frac{1}{\overline{V}}$$

These equations may be substituted in any of the formulas shown in this paper whenever necessary.

● Bernoulli's theorem: *Equation 3-1*

$$Z + \frac{144\,P}{\rho} + \frac{v^2}{2g} = H$$

$$Z_1 + \frac{144\,P_1}{\rho_1} + \frac{v_1^2}{2g} = Z_2 + \frac{144\,P_2}{\rho_2} + \frac{v_2^2}{2g} + h_L$$

● Mean velocity of flow in pipe:
(Continuity Equation) *Equation 3-2*

$$v = \frac{q}{A} = 183.3\,\frac{q}{d^2} = 0.408\,\frac{Q}{d^2}$$

$$v = 0.286\,\frac{B}{d^2} = 183.3\,\frac{w\overline{V}}{d^2} = 0.0509\,\frac{W\overline{V}}{d^2}$$

$$v = 0.001\,44\,\frac{q'_hT}{P'd^2} = 0.003\,89\,\frac{q'_hS_g}{\rho d^2}$$

$$V = \frac{q_m}{A} = 2.40\,\frac{W\overline{V}}{a} = 3.06\,\frac{W\overline{V}}{d^2}$$

$$V = 0.0865\,\frac{q'_hT}{P'd^2} = 0.233\,\frac{q'_hS_g}{\rho d^2}$$

● Reynolds number
of flow in pipe: *Equation 3-3*

$$R_e = \frac{Dv\rho}{\mu_e} = \frac{Dv\rho}{32.2\mu'_e} = 123.9\,\frac{dv\rho}{\mu}$$

$$R_e = 22\,700\,\frac{q\rho}{d\mu} = \frac{473q\rho}{R_H\mu} = 50.6\,\frac{Q\rho}{d\mu}$$

$$R_e = 6.31\,\frac{W}{d\mu} = 0.482\,\frac{q'_hS_g}{d\mu} = 35.4\,\frac{B\rho}{d\mu}$$

$$R_e = \frac{Dv}{\nu'} = \frac{dv}{12\nu'} = 7740\,\frac{dv}{\nu}$$

$$R_e = 1\,419\,000\,\frac{q}{\nu d} = 3160\,\frac{Q}{\nu d} = 394\,\frac{W\overline{V}}{\nu d}$$

● Viscosity equivalents: *Equation 3-4*

$$\nu = \frac{\mu}{\rho'} = \frac{\mu}{S}$$

● Head loss and pressure drop
in straight pipe:

Pressure loss due to flow is the same in a sloping, vertical, or horizontal pipe. However, the difference in pressure due to the difference in head must be considered in pressure drop calculations; see page 1-5.

Darcy's formula: *Equation 3-5*

$$h_L = f\,\frac{L}{D}\,\frac{v^2}{2g} = 0.1863\,\frac{fLv^2}{d}$$

$$h_L = 6260\,\frac{fLq^2}{d^5} = 0.0311\,\frac{fLQ^2}{d^5}$$

$$h_L = 0.015\,24\,\frac{fLB^2}{d^5} = 0.000\,483\,\frac{fLW^2\overline{V}^2}{d^5}$$

$$\Delta P = 0.001\,294\,\frac{fL\rho v^2}{d} = 0.000\,000\,359\,\frac{fL\rho V^2}{d}$$

$$\Delta P = 43.5\,\frac{fL\rho q^2}{d^5} = 0.000\,216\,\frac{fL\rho Q^2}{d^5}$$

$$\Delta P = 0.000\,1058\,\frac{fL\rho B^2}{d^5} = 0.000\,003\,36\,\frac{fLW^2\overline{V}}{d^5}$$

$$\Delta P = 0.000\,000\,007\,26\,\frac{fLT(q'_h)^2S_g}{d^5P'}$$

$$\Delta P = 0.000\,000\,019\,59\,\frac{fL(q'_h)^2S_g^2}{d^5\rho}$$

For simplified compressible fluid formula, see page 3-22.

● Head loss and pressure drop
with laminar flow in straight pipe:

For laminar flow conditions ($R_e < 2000$), the friction factor is a direct mathematical function of the Reynolds number only, and can be expressed by the formula: $f = 64/R_e$. Substituting this value of f in the Darcy formula, it can be rewritten:

Equation 3-6

$$h_L = 0.0962\,\frac{\mu Lv}{d^2\rho}$$

$$h_L = 17.65\,\frac{\mu Lq}{d^4\rho} = 0.0393\,\frac{\mu LQ}{d^4\rho}$$

$$h_L = 0.0275\,\frac{\mu LB}{d^4\rho} = 0.004\,90\,\frac{\mu LW}{d^4\rho^2}$$

$$\Delta P = 0.000\,668\,\frac{\mu Lv}{d^2} = 0.1225\,\frac{\mu Lq}{d^4}$$

$$\Delta P = 0.000\,273\,\frac{\mu LQ}{d^4} = 0.000\,191\,\frac{\mu LB}{d^4}$$

$$\Delta P = 0.000\,0340\,\frac{\mu LW}{d^4\rho}$$

By: JJB 10/29/01
Ckd: EG 6/20/02

Summary of Formulas — continued

Head loss and pressure drop through valves and fittings

Head loss through valves and fittings is generally given in terms of resistance coefficient K which indicates static head loss through a valve in terms of "velocity head", or, equivalent length in pipe diameters L/D that will cause the same head loss as the valve.

From Darcy's formula, head loss through a pipe is:

$$h_L = f \frac{L}{D} \frac{v^2}{2g} \qquad \text{Equation 3-5}$$

and head loss through a valve is:

$$h_L = K \frac{v^2}{2g} \qquad \text{Equation 3-14}$$

therefore:

$$K = f \frac{L}{D} \qquad \text{Equation 3-15}$$

To eliminate needless duplication of formulas, the following are all given in terms of K. Whenever necessary, substitute $(f\,L/D)$ for (K).

$$h_L = \frac{522\,Kq^2}{d^4} = 0.002\,59\,\frac{KQ^2}{d^4} \qquad \text{Equation 3-14}$$

$$h_L = 0.001\,270\,\frac{KB^2}{d^4} = 0.000\,0403\,\frac{KW^2\overline{V}^2}{d^4}$$

$$\Delta P = 0.000\,1078\,K\rho v^2 = 0.000\,000\,0300\,K\rho V^2$$

$$\Delta P = 3.62\,\frac{K\rho q^2}{d^4} = 0.000\,017\,99\,\frac{K\rho Q^2}{d^4}$$

$$\Delta P = 0.000\,008\,82\,\frac{K\rho B^2}{d^4}$$

$$\Delta P = 0.000\,000\,280\,\frac{KW^2\overline{V}}{d^4}$$

$$\Delta P = 0.000\,000\,000\,605\,\frac{K(q'_h)^2\,T\,S_g}{d^4\,P'}$$

$$\Delta P = 0.000\,000\,001\,633\,\frac{K\,(q'_h)^2\,S_g^2}{d^4\,\rho}$$

For compressible flow with h_L or ΔP greater than approximately 10% of inlet absolute pressure, the denominator should be multiplied by Y^2. For values of Y, see page A-22.

Pressure drop and flow of liquids of low viscosity using flow coefficient

$$\Delta P = \left(\frac{Q}{C_v}\right)^2 \frac{\rho}{62.4} \qquad \text{Equation 3-16}$$

$$Q = C_v\sqrt{\Delta P\frac{62.4}{\rho}} = 7.90\,C_v\sqrt{\frac{\Delta P}{\rho}}$$

$$C_v = Q\sqrt{\frac{\rho}{\Delta P\,(62.4)}} = \frac{29.9\,d^2}{\sqrt{f\,L/D}} = \frac{29.9\,d^2}{\sqrt{K}}$$

$$= \frac{891\,d^4}{(C_v)^2}$$

Resistance coefficient, K, for sudden and gradual enlargements in pipes

If, $\theta \leq 45°$,

$$K_1 = 2.6\sin\frac{\theta}{2}\,(1-\beta^2)^2 \qquad \text{*Equation 3-17}$$

If, $45° < \theta \leq 180°$,

$$K_1 = (1-\beta^2)^2 \qquad \text{*Equation 3-17.1}$$

Resistance coefficient, K, for sudden and gradual contractions in pipes

If, $\theta \leq 45°$,

$$K_1 = 0.8\sin\frac{\theta}{2}\,(1-\beta^2) \qquad \text{*Equation 3-18}$$

If, $45° < \theta \leq 180°$,

$$K_1 = 0.5\sqrt{\sin\frac{\theta}{2}}\,(1-\beta^2) \qquad \text{*Equation 3-18.1}$$

*Note: The values of the resistance coefficients (K) in equations 3-17, 3-17.1, 3-18, and 3-18.1 are based on the velocity in the small pipe. To determine K values in terms of the greater diameter, divide the equations by β^4.

Discharge of fluid through valves, fittings, and pipe; Darcy's formula

Liquid flow: Equation 3-19

$$q = 0.0438\,d^2\sqrt{\frac{h_L}{K}} = 0.525\,d^2\sqrt{\frac{\Delta P}{K\rho}}$$

$$Q = 19.65\,d^2\sqrt{\frac{h_L}{K}} = 236\,d^2\sqrt{\frac{\Delta P}{K\rho}}$$

$$w = 0.0438\,\rho d^2\sqrt{\frac{h_L}{K}} = 0.525\,d^2\sqrt{\frac{\Delta P\rho}{K}}$$

$$W = 157.6\,\rho d^2\sqrt{\frac{h_L}{K}} = 1891\,d^2\sqrt{\frac{\Delta P\rho}{K}}$$

Compressible flow:

$$q'_h = 40\,700\,Yd^2\sqrt{\frac{\Delta P\,P'_1}{KT_1\,S_g}} \qquad \text{Equation 3-20}$$

$$q'_h = 24\,700\,\frac{Yd^2}{S_g}\sqrt{\frac{\Delta P\,\rho_1}{K}}$$

$$q'_m = 678\,Yd^2\sqrt{\frac{\Delta P\,P'_1}{KT_1\,S_g}} = 412\,\frac{Yd^2}{S_g}\sqrt{\frac{\Delta P\,\rho_1}{K}}$$

$$q' = 11.30\,Yd^2\sqrt{\frac{\Delta P P'_1}{KT_1\,S_g}} = 6.87\,\frac{Yd^2}{S_g}\sqrt{\frac{\Delta P\rho_1}{K}}$$

$$w = 0.525\,Yd^2\sqrt{\frac{\Delta P}{K\overline{V}_1}} \qquad W = 1891\,Yd^2\sqrt{\frac{\Delta P}{K\overline{V}_1}}$$

Values of Y are shown on page A-22. For K, Y, and ΔP determination, see examples on pages 4-13 and 4-14.

By: JJB 10/29/01
Chkd: EG 6/20/02

TABLE—SHEET 1 of 4

Coefficients (K) for Valves and Fittings

(... of schedule pipe as listed on page 2-10)

...A FOR CLEAN COMMERCIAL STEEL PIPE ...N ZONE OF COMPLETE TURBULENCE

					1½"	2"	2½, 3"	4"	5"	6"	8-10"	12-16"	18-24"
Friction Factor (f_T)	.027	.025	.023	.022	.021	.019	.018	.017	.016	.015	.014	.013	.012

FORMULAS FOR CALCULATING "K" FACTORS* FOR VALVES AND FITTINGS WITH REDUCED PORT

(Ref: Pages 2-11 and 3-4)

- **Formula 1**

$$K_2 = \frac{0.8\left(\sin\frac{\theta}{2}\right)(1-\beta^2)}{\beta^4} = \frac{K_1}{\beta^4}$$

- **Formula 2**

$$K_2 = \frac{0.5\,(1-\beta^2)\sqrt{\sin\frac{\theta}{2}}}{\beta^4} = \frac{K_1}{\beta^4}$$

- **Formula 3**

$$K_2 = \frac{2.6\left(\sin\frac{\theta}{2}\right)(1-\beta^2)^2}{\beta^4} = \frac{K_1}{\beta^4}$$

- **Formula 4**

$$K_2 = \frac{(1-\beta^2)^2}{\beta^4} = \frac{K_1}{\beta^4}$$

- **Formula 5**

$$K_2 = \frac{K_1}{\beta^4} + \text{Formula 1} + \text{Formula 3}$$

$$K_2 = \frac{K_1 + \sin\frac{\theta}{2}\left[0.8\,(1-\beta^2) + 2.6\,(1-\beta^2)^2\right]}{\beta^4}$$

- **Formula 6**

$$K_2 = \frac{K_1}{\beta^4} + \text{Formula 2} + \text{Formula 4}$$

$$K_2 = \frac{K_1 + 0.5\sqrt{\sin\frac{\theta}{2}}\,(1-\beta^2) + (1-\beta^2)^2}{\beta^4}$$

- **Formula 7**

$$K_2 = \frac{K_1}{\beta^4} + \beta\,(\text{Formula 2} + \text{Formula 4}) \text{ when } \theta = 180^\circ$$

$$K_2 = \frac{K_1 + \beta\left[0.5\,(1-\beta^2) + (1-\beta^2)^2\right]}{\beta^4}$$

$$\beta = \frac{d_1}{d_2}$$

$$\beta^2 = \left(\frac{d_1}{d_2}\right)^2 = \frac{a_1}{a_2}$$

Subscript 1 defines dimensions and coefficients with reference to the smaller diameter.
Subscript 2 refers to the larger diameter.

***Use "K" furnished by valve or fitting supplier when available.**

SUDDEN AND GRADUAL CONTRACTION

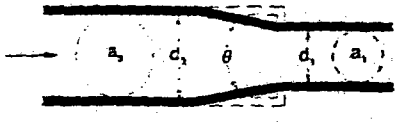

If: $\theta \leq 45^\circ$ ..... K_2 = Formula 1

$45^\circ < \theta \leq 180^\circ$ ... K_2 = Formula 2

SUDDEN AND GRADUAL ENLARGEMENT

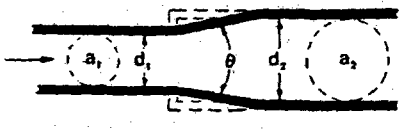

If: $\theta \leq 45^\circ$ ..... K_2 = Formula 3

$45^\circ < \theta \leq 180^\circ$ ... K_2 = Formula 4

16/27

By: JJB 10/29/01
Chd: GG 6/20/02

"K" FACTOR TABLE—SHEET 2 of 4

Representative Resistance Coefficients (K) for Valves and Fittings

(for formulas and friction data, see page A-26)

("K" is based on use of schedule pipe as listed on page 2-10)

GATE VALVES
Wedge Disc, Double Disc, or Plug Type

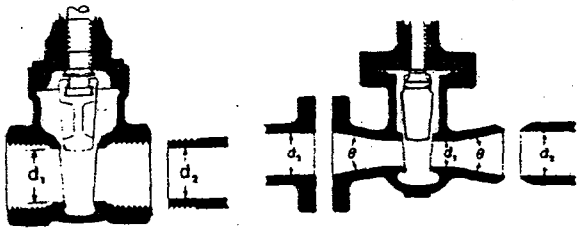

If: $\beta = 1$, $\theta = 0$ . . . . . $K_1 = 8 f_T$

$\beta < 1$ and $\theta \leq 45°$ . . . . . K_2 = Formula 5

$\beta < 1$ and $45° < \theta \leq 180°$ . . . K_2 = Formula 6

SWING CHECK VALVES

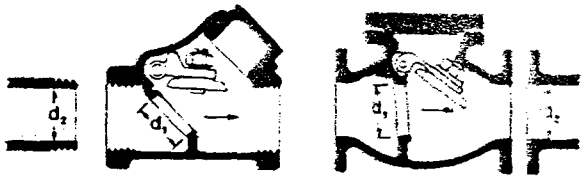

$K = 100 f_T$

Minimum pipe velocity (fps) for full disc lift $= 35 \sqrt{\bar{V}}$

$K = 50 f_T$

Minimum pipe velocity (fps) for full disc lift $= 60 \sqrt{\bar{V}}$ except U/L listed $= 100 \sqrt{\bar{V}}$

GLOBE AND ANGLE VALVES

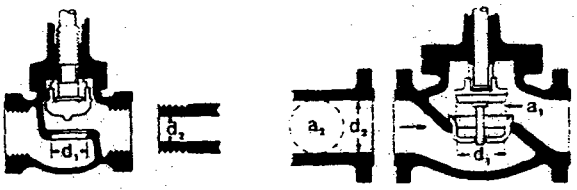

If: $\beta = 1 \ldots K_1 = 340 f_T$

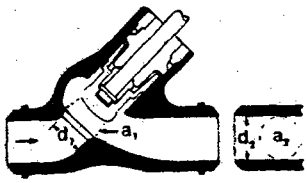

If: $\beta = 1 \ldots K_1 = 55 f_T$

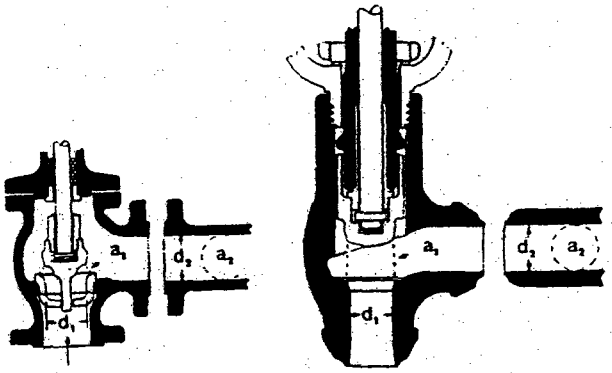

If: $\beta = 1 \ldots K_1 = 150 f_T$ If: $\beta = 1 \ldots K_1 = 55 f_T$

All globe and angle valves, whether reduced seat or throttled,

If: $\beta < 1 \ldots K_2$ = Formula 7

LIFT CHECK VALVES

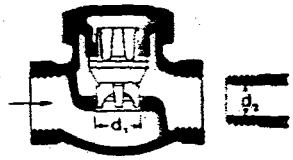

If: $\beta = 1 \ldots K_1 = 600 f_T$

$\beta < 1 \ldots K_2$ = Formula 7

Minimum pipe velocity (fps) for full disc lift $= 40 \beta^2 \sqrt{\bar{V}}$

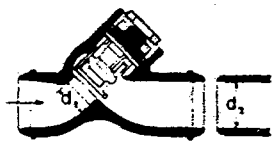

If: $\beta = 1 \ldots K_1 = 55 f_T$

$\beta < 1 \ldots K_2$ = Formula 7

Minimum pipe velocity (fps) for full disc lift $= 140 \beta^2 \sqrt{\bar{V}}$

TILTING DISC CHECK VALVES

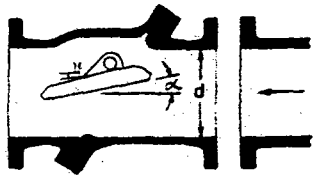

	$\alpha = 5°$	$\alpha = 15°$
Sizes 2 to 8" . . . K =	$40 f_T$	$120 f_T$
Sizes 10 to 14" . . . K =	$30 f_T$	$90 f_T$
Sizes 16 to 48" . . . K =	$20 f_T$	$60 f_T$
Minimum pipe velocity (fps) for full disc lift =	$80 \sqrt{\bar{V}}$	$30 \sqrt{\bar{V}}$

By: JJB 10/29/01
Chd: EG 6/20/02

"K" FACTOR TABLE—SHEET 3 of 4

Representative Resistance Coefficients (K) for Valves and Fittings

(for formulas and friction data, see page A-26)

("K" is based on use of scheduled pipe as listed on page 2-10)

STOP-CHECK VALVES (Globe and Angle Types)

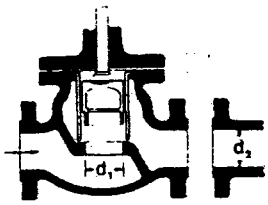

If:
$\beta = 1 \ldots K_1 = 400\, f_T$
$\beta < 1 \ldots K_2 = \text{Formula } 7$

Minimum pipe velocity for full disc lift
$= 55\, \beta^2 \sqrt{\bar{V}}$

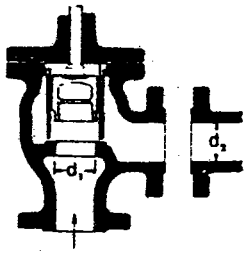

If:
$\beta = 1 \ldots K_1 = 200\, f_T$
$\beta < 1 \ldots K_2 = \text{Formula } 7$

Minimum pipe velocity for full disc lift
$= 75\, \beta^2 \sqrt{\bar{V}}$

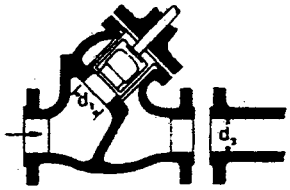

If:
$\beta = 1 \ldots K_1 = 300\, f_T$
$\beta < 1 \ldots K_2 = \text{Formula } 7$

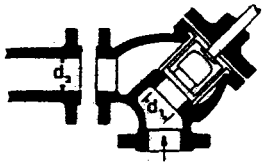

If:
$\beta = 1 \ldots K_1 = 350\, f_T$
$\beta < 1 \ldots K_2 = \text{Formula } 7$

Minimum pipe velocity (fps) for full disc lift
$= 60\, \beta^2 \sqrt{\bar{V}}$

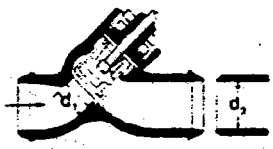

If:
$\beta = 1 \ldots K_1 = 55\, f_T$
$\beta < 1 \ldots K_2 = \text{Formula } 7$

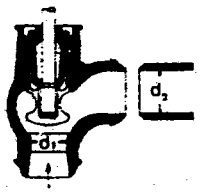

If:
$\beta = 1 \ldots K_1 = 55\, f_T$
$\beta < 1 \ldots K_2 = \text{Formula } 7$

Minimum pipe velocity (fps) for full disc lift
$= 140\, \beta^2 \sqrt{\bar{V}}$

FOOT VALVES WITH STRAINER

Poppet Disc

$K = 420 f_T$

Minimum pipe velocity (fps) for full disc lift
$= 15 \sqrt{\bar{V}}$

Hinged Disc

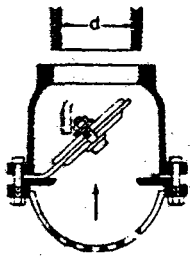

$K = 75 f_T$

Minimum pipe velocity (fps) for full disc lift
$= 35 \sqrt{\bar{V}}$

BALL VALVES

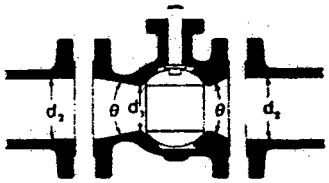

If: $\beta = 1, \theta = 0 \ldots\ldots\ldots\ldots K_1 = 3\, f_T$
$\beta < 1$ and $\theta \leq 45° \ldots\ldots\ldots K_2 = \text{Formula } 5$
$\beta < 1$ and $45° < \theta \leq 180° \ldots K_2 = \text{Formula } 6$

BUTTERFLY VALVES

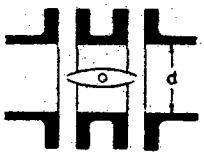

Sizes 2 to 8" $\ldots K = 45\, f_T$
Sizes 10 to 14" $\ldots K = 35\, f_T$
Sizes 16 to 24" $\ldots K = 25\, f_T$

By: 10/29/01 JJB
Ckd: 6/20/02 EV

"K" FACTOR TABLE—SHEET 4 of 4

Representative Resistance Coefficients (K) for Valves and Fittings

(for formulas and friction data, see page A-26)

("K" is based on use of schedule pipe as listed on page 2-10)

PLUG VALVES AND COCKS

Straight-Way

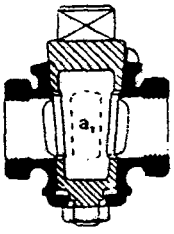

If: $\beta = 1$, $K_1 = 18 f_T$

3-Way

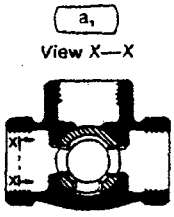

If: $\beta = 1$, $K_1 = 30 f_T$

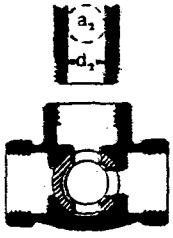

If: $\beta = 1$, $K_1 = 90 f_T$

If: $\beta < 1 \ldots K_2$ = Formula 6

MITRE BENDS

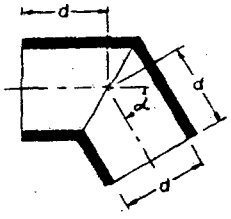

α	K
0°	2 f_T
15°	4 f_T
30°	8 f_T
45°	15 f_T
60°	25 f_T
75°	40 f_T
90°	60 f_T

90° PIPE BENDS AND FLANGED OR BUTT-WELDING 90° ELBOWS

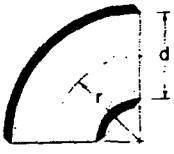

r/d	K	r/d	K
1	20 f_T	8	24 f_T
1.5	14 f_T	10	30 f_T
2	12 f_T	12	34 f_T
3	12 f_T	14	38 f_T
4	14 f_T	16	42 f_T
6	17 f_T	20	50 f_T

The resistance coefficient, K_B, for pipe bends other than 90° may be determined as follows:

$$K_B = (n - 1)\left(0.25\,\pi\, f_T \frac{r}{d} + 0.5\,K\right) + K$$

n = number of 90° bends
K = resistance coefficient for one 90° bend (per table)

CLOSE PATTERN RETURN BENDS

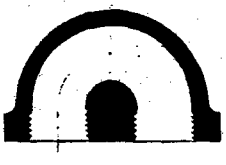

$K = 50 f_T$

STANDARD ELBOWS

90°

$K = 30 f_T$

45°

$K = 16 f_T$

STANDARD TEES

Flow thru run. . . . . $K = 20 f_T$
Flow thru branch. . . . $K = 60 f_T$

PIPE ENTRANCE

Inward Projecting

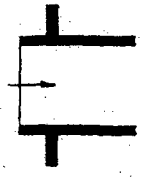

$K = 0.78$

r/d	K
0.00*	0.5
0.02	0.28
0.04	0.24
0.06	0.15
0.10	0.09
0.15 & up	0.04

*Sharp-edged

Flush

For K, see table

PIPE EXIT

Projecting

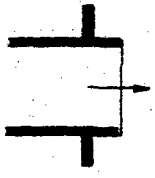

$K = 1.0$

Sharp-Edged

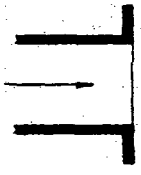

$K = 1.0$

Rounded

$K = 1.0$

By: JOB 10/29/01
Chk: EG 11/2/01

Friction Factors for Clean Commercial Steel Pipe[18]

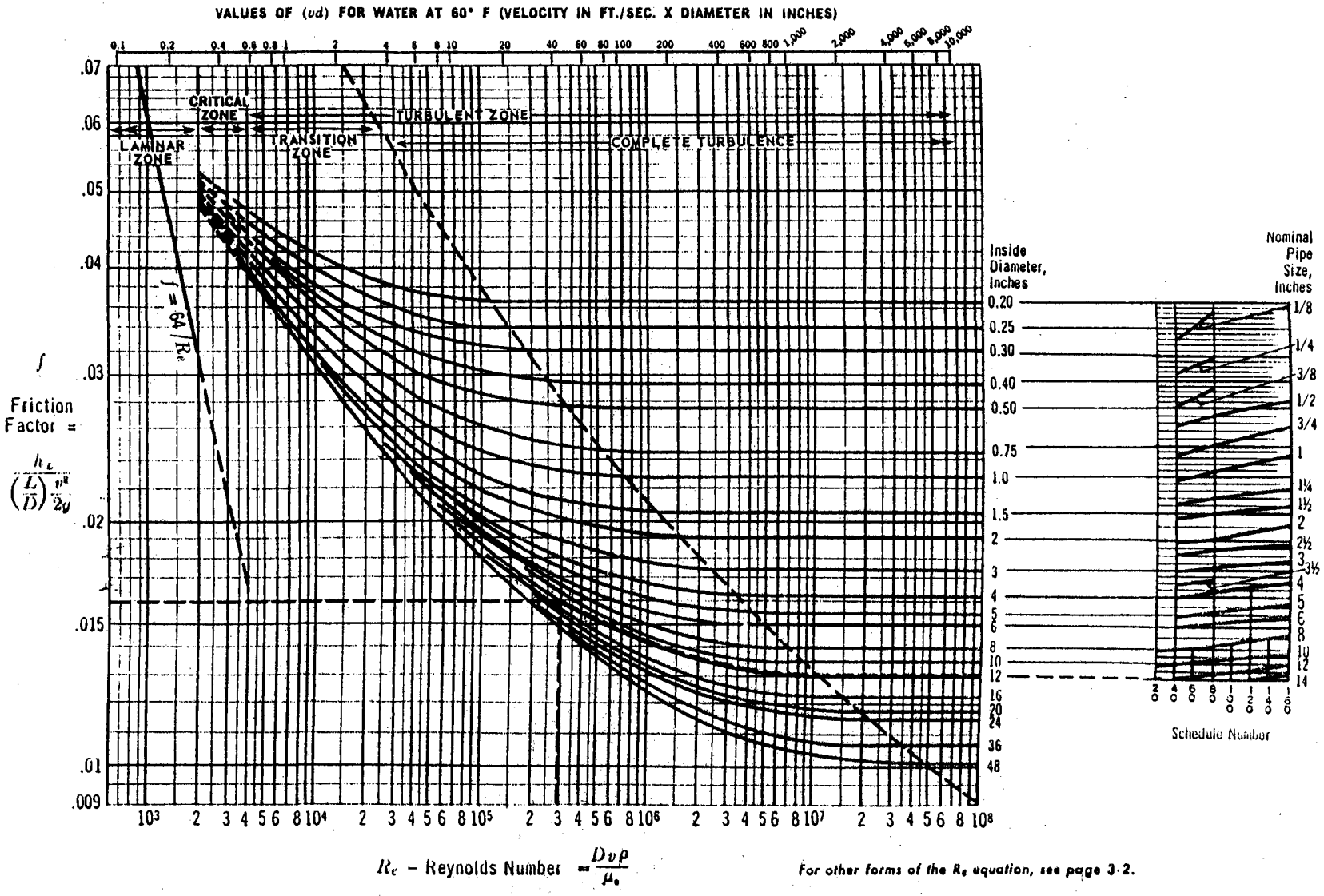

For other forms of the R_e equation, see page 3-2.

Problem: Determine the friction factor for 12-inch Schedule 40 pipe at a flow having a Reynolds number of 300,000.

Solution:
The friction factor (f) equals 0.016.

2012

Corporate Office: One Ho[illegible]

By: JJB 10/29/01
Ck'd: GS 6/20/01

HL5M Dri-Prime® Pump

Quick Select Menu:
Products
Diesel Dri-Prime Pumps
Electric Dri-Prime Pumps
Sound Attenuated Dri-Prime Pumps
Hydraulic Submersible Pumps
Electric Submersible Pumps
More Pumps
Rentals
Dri-Prime Pumps
More Pumps
Pipe, Hose, Fittings
Bauer Pipe
HDPE, Fusion Machine
Generators, Light Towers, Compressors
Services
Locations
Applications
News
Career Opportunities
Request Information

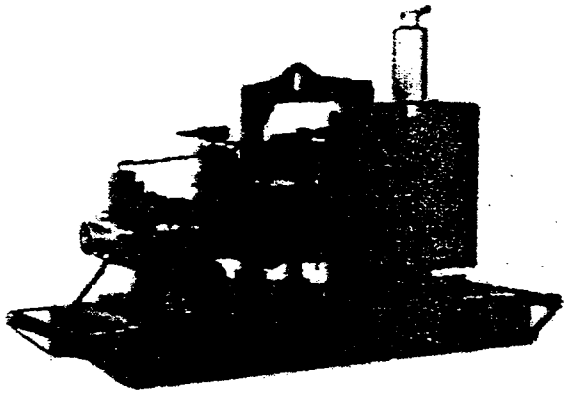

HL5M Performance Curve

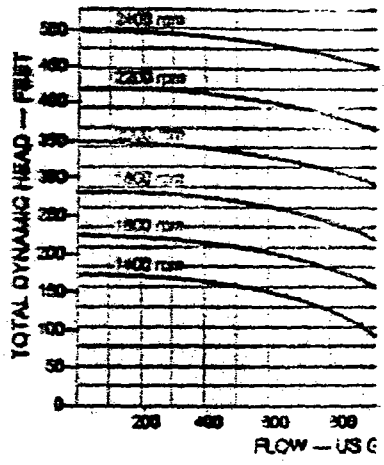

The HL5M automatic Godwin Dri-Prime 6" x 6" centrifugal pump is an extremely powerful yet compact high pressure pump with flow capabilities to 1450 gallons per minute and discharge heads to 500 feet. In addition, the HL5M features the unique Godwin high pressure oil bath mechanical seal design that allows for totally dry running for indefinite periods of time while automatically priming and repriming. Able to perform in the toughest conditions, the HL5M can pass a solid to 1-3/8" in diameter, making it a high pressure trash pump as well as a superior dewatering pump. The powerful HL5M has already proven itself a pump of choice for mines, quarries, temporary fire pump systems and many other high pressure applications.

Pump Specifications

Download Pump Spec
in Adobe Acrobat F

godwin pumps

Dri-Prime® is a registered trademark of Godwin Pumps of America, Inc.
© Copyright, 2001 Godwin Pumps of America, Inc. - All Rights Reserved.

P-301

HL5M Dri-P[illegible]e® Pumps

By: JJB 10/29/01
Ckd: EL 6/20/02

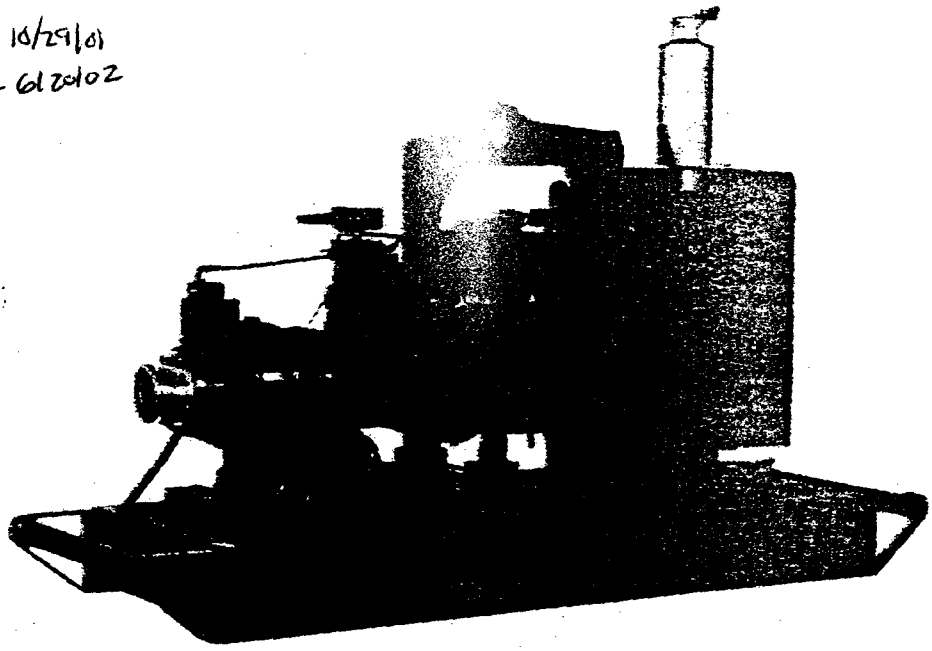

The HL5M automatic Godwin Dri-Prime® 6" x 6" centrifugal pump is an extremely powerful yet compact high pressure pump with flow capabilities to 1450 gallons per minute and discharge heads to 500 feet. In addition, the HL5M features the unique Godwin high pressure oil bath mechanical seal design that allows for totally dry running for indefinite periods of time while automatically priming and repriming. Able to perform in the toughest conditions, the HL5M can pass a solid to 1-3/8" in diameter, making it a high pressure trash pump as well as a superior dewatering pump. The powerful HL5M has already proven itself a pump of choice for mines, quarries, temporary fire pump systems and many other high pressure applications.

Features

- Close coupled automatic priming 6" x 6" centrifugal pump mounted to a diesel engine. Also available in electric drive or as bare shaft pumpend.
- All cast iron construction with cast chromium steel impeller.
- Extensive application flexibility — will handle liquids with solids up to 1-3/8" in diameter.
- Continuously operated "Godwin" venturi air ejector priming device featuring belt-driven air compressor requiring no form of periodic adjustment or control.
- Dry running, high pressure, oil bath mechanical seal with abrasion resistant solid silicon carbide interfaces.
- Solids handling swing type Non Return Valve with renewable flexible rubber seat.
- Compact unit mounted on a skid base or two wheeled highway trailer, both incorporating integral overnight running fuel tank.
- Simple maintenance — normally limited to checking engine and seal cavity oil levels.
- Standard engine, Caterpillar 3126TA. Available with a variety of engines including John Deere, Cummins and Deutz.
- Low profile side discharge for easy pipe connection.

godwin pumps

By: JJB 10/29/01
Chkd: GJS 6/20/02

221

HL5M Performance Curve

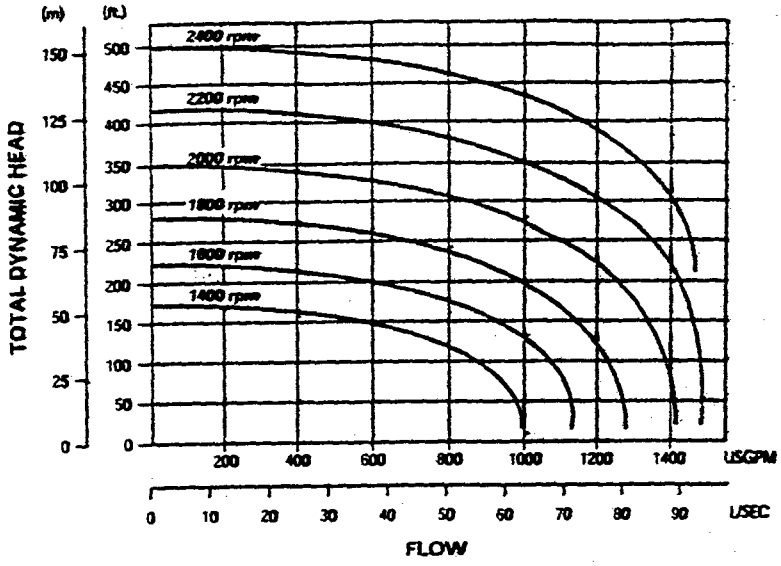

Performance Table

HL5M Diesel Set — Caterpillar 3126TA, 220 hp @ 2400 rpm
Impeller Diameter — 15-1/8" (385 mm)

	Total Delivery Head — Feet				
Total Suction Head — Feet	180	220	260	280	300
	Output — GPM				
10	1500	1480	1465	1425	1410
15	1475	1460	1430	1400	1375
20	1380	1270	1200	1160	1115
25	1290	1095	975	920	855

Performance data listed in table and curves based on water tests at sea level and 68° F (20° C). Larger diameter pipes may be required for maximum flows.

Dimensions

HL5M — Caterpillar 3126TA, Skid Base
Weight: 7200 lbs.

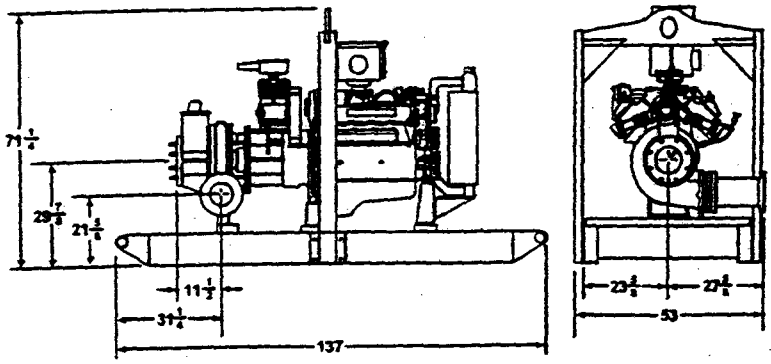

All dimensions listed in inches.

Specifications

Maximum Operating Speed:
2400 rpm
Maximum Operating Temperature:
+212° F (100° C)
Maximum Working Pressure:
216 psi
Maximum Suction Pressure:
100 psi
Maximum Casing Pressure:
325 psi
Fuel Tank Capacity:
175 gal.
Fuel Consumption:
11.7 gph @ 2400 rpm (full load & max. speed)
Pipe Connections:
Suction: 6" 150# flange
Discharge: 6" 150# flange
Solids Handling:
1-3/8" diameter

Materials

Pump Casing, Suction Cover, and Wearplates:
Close Grained Cast Iron (optional 26% chrome iron available)
Impeller:
Cast Chromium Steel hardened to minimum Brinell 341 HB
Shaft:
1-1/2% Nickel/Chromium steel
Non Return Valve Body, Ejector Housing:
Close Grained Cast Iron
Non Return Valve Flapper:
High nitrile rubber
Mechanical Seal Faces:
Solid silicon carbide

godwin pumps

[redacted]

One Floodgate Road, Bridgeport, NJ 08014
Tel: (856) 467-3636 • Fax: (856) 467-4841
E-mail: sales@godwinpumps.com
www.godwinpumps.com

BRANCH LOCATIONS:
Norwich, CT • Buffalo, NY • Chicago, IL
Washington, DC • Richmond, VA • Virginia Beach, VA • Charleston, WV • N. Charleston, SC
Atlanta, GA • Houston, TX • Raleigh, NC

Dri-Prime® is a registered trademark of Godwin Pumps of America, Inc.
Specifications and illustrations are subject to revision without notice.
© Copyright 2001 Godwin Pumps of America, Inc. All rights reserved.

GPASL.02x.601

By: JOB 10/29/01
Chd: EG 6/24

25/24

godwin pumps

PUMP TYPE HLSH	
CURVE No. HLSH-4A	DATE 15.02.96
BRANCH SIZES 6" X 6"	SPEED RPM VARIABLE

PAGE 1

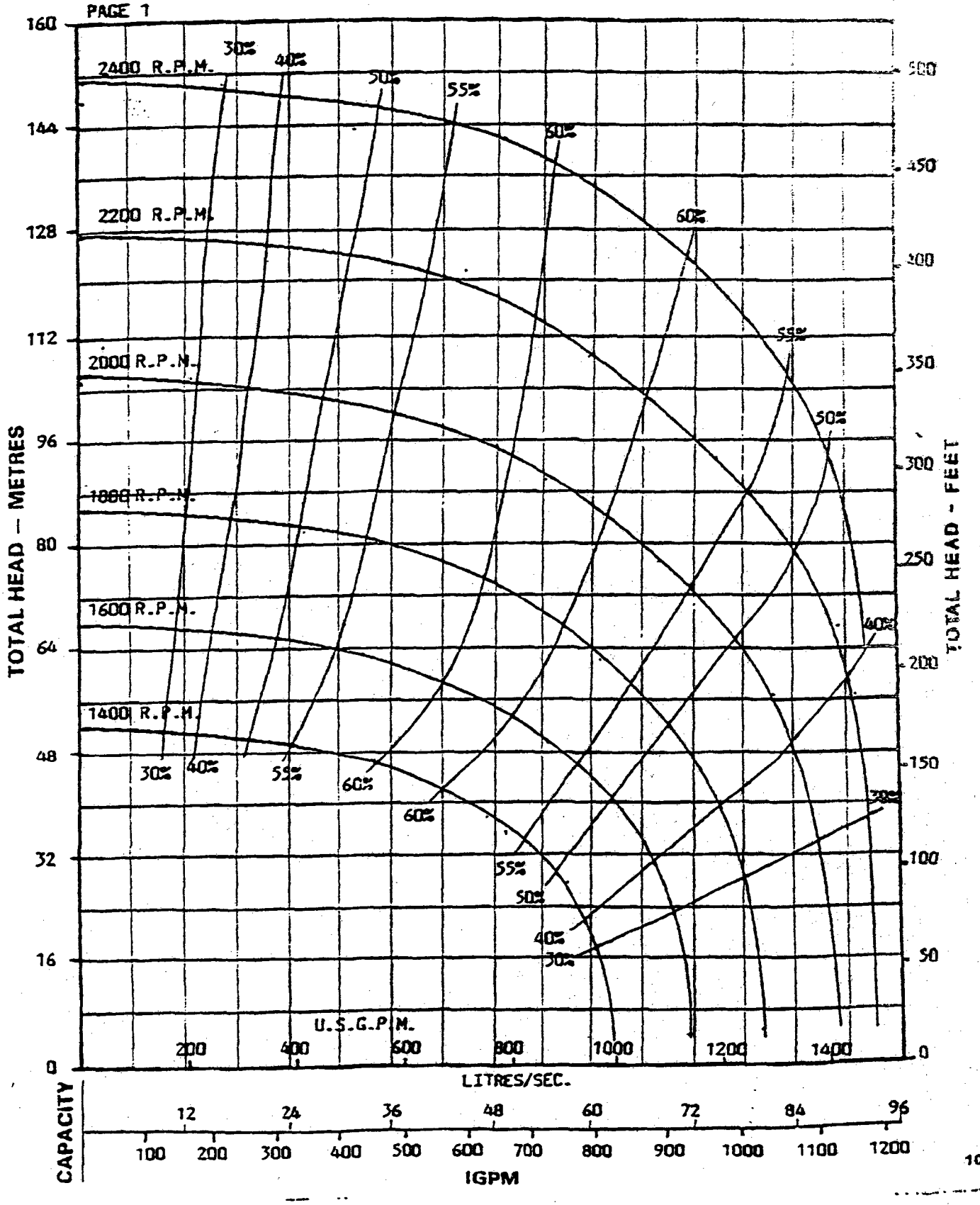

107

PAGE.02

AUG 02 2001 18:37

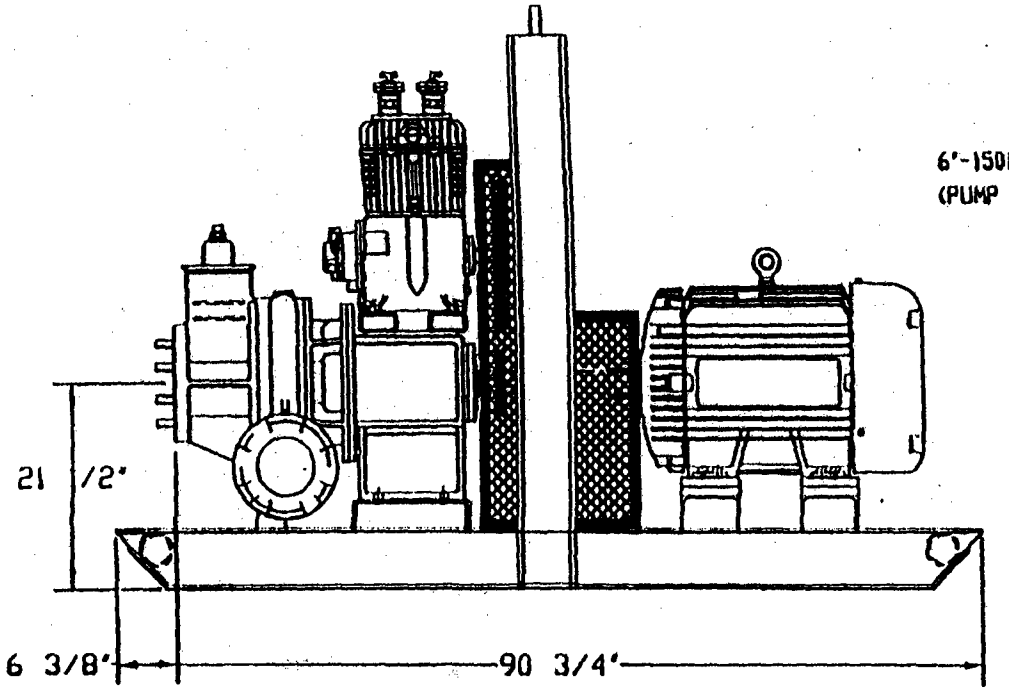

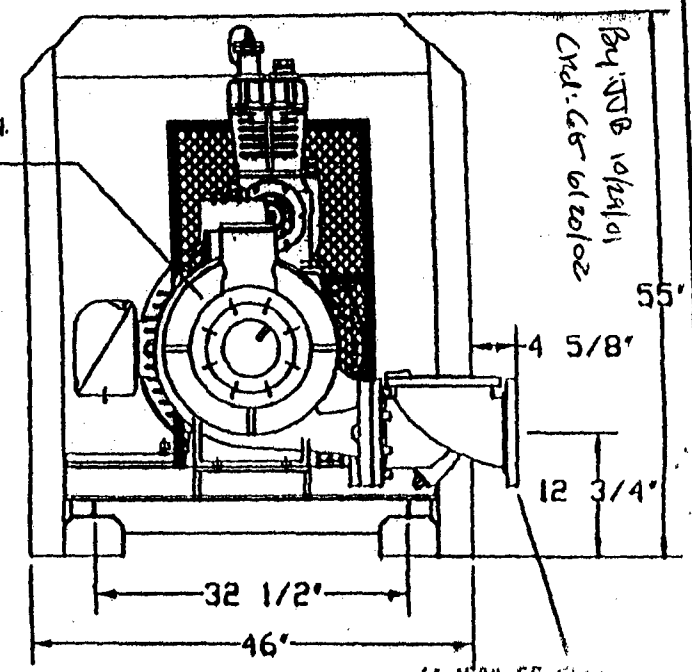

By JDB 10/28/01
Crd: GS 6/20/02

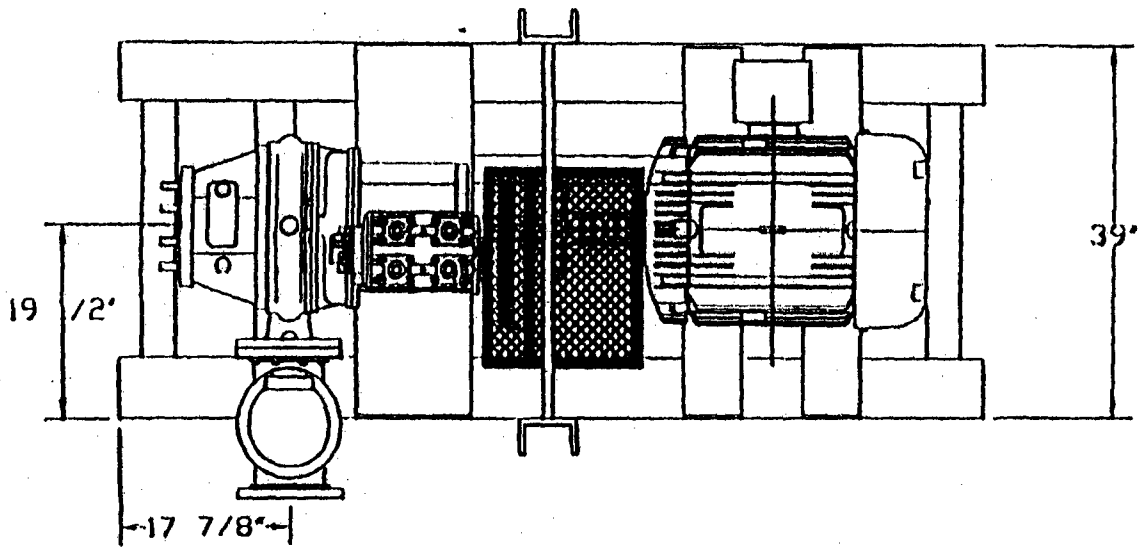

NOTES:

1. DIMENSIONS ARE IN INCHES.
2. DO NOT SCALE DRAWING.
3. SUCTION AND DISCHARGE FLANGES ARE 6" ASA 150.
4. APPROXIMATE WEIGHT = 2,760lbs.

godwin pumps of America, Inc.

RENTAL * SALES * SERVICE
One Flandgate Road * Bridgeport, NJ 08014
Tel: (609) 467-3636 * (609) 467-1911

DATE	MODEL [illegible]	SHEET
4/30/98	100 HP ELECTRIC DRIVE [illegible]	1

©copyright 1998, [illegible]

25/27

By: JDB 10/21/01
Ckd: EG 01/2/02

PLAN NOTES

1. BASE MAP COMPILED AND CONTROLLED BY PHOTOGRAMMETRIC METHODS FROM AERIAL PHOTOGRAPHS CONDUCTED BY JAMES W. SEWALL COMPANY OF OLD TOWN, MAINE ON DECEMBER 02, 1998.
2. BATHYMETRY IS BASED ON HYDROGRAPHIC SURVEY CONDUCTED BY THE U.S. ARMY CORPS OF ENGINEERS IN FEBRUARY AND MARCH 1999.
3. PROPERTY BOUNDARY AND EASEMENT DATA TAKEN FROM PLAN ENTITLED "PLAN OF LAND COGGESHALL, MITCHELL AND SAWYER STREET PROPERTIES - NEW BEDFORD, MASSACHUSETTS FOR FOSTER WHEELER ENVIRONMENTAL CORPORATION", DATED JUNE, 02 1999 BY SAI SURVEYING CORPORATION OF JAMESTOWN, RHODE ISLAND.
4. EXISTING UTILITY LOCATIONS DEPICTED AND NOTED HEREON ARE TO BE CONSIDERED APPROXIMATE.

LEGEND:

- EXISTING INDEX CONTOUR
- EXISTING INTERMEDIATE CONTOUR
- EXISTING SPOT ELEVATION
- EASEMENT LINE
- EXISTING CHAIN LINK FENCE
- EDGE OF PAVEMENT
- S 01°40'24" E — BOUNDARY BEARING & DIRECTION
- W — EXISTING WATER SERVICE
- G — EXISTING GAS SERVICE
- OHW — EXISTING OVERHEAD UTILITY SERVICE LINES
- FIRE HYDRANT
- UTILITY POLE
- LIGHT
- NAIL FOUND
- CATCH BASIN
- SIGN
- VALVE
- WATER VALVE
- TREE
- MANHOLE
- SEWER MANHOLE
- DRAIN MANHOLE
- GAS MANHOLE
- ELECTRIC MANHOLE
- TELEPHONE MANHOLE
- BOLLARD

PROPERTY BOUNDARY LINE TABLE		
LINE	DIRECTION	DISTANCE
L1	N 08°57'38" W	22.40'
L2	S 08°52'44" E	3.00'
L3	N 81°07'16" E	21.95'

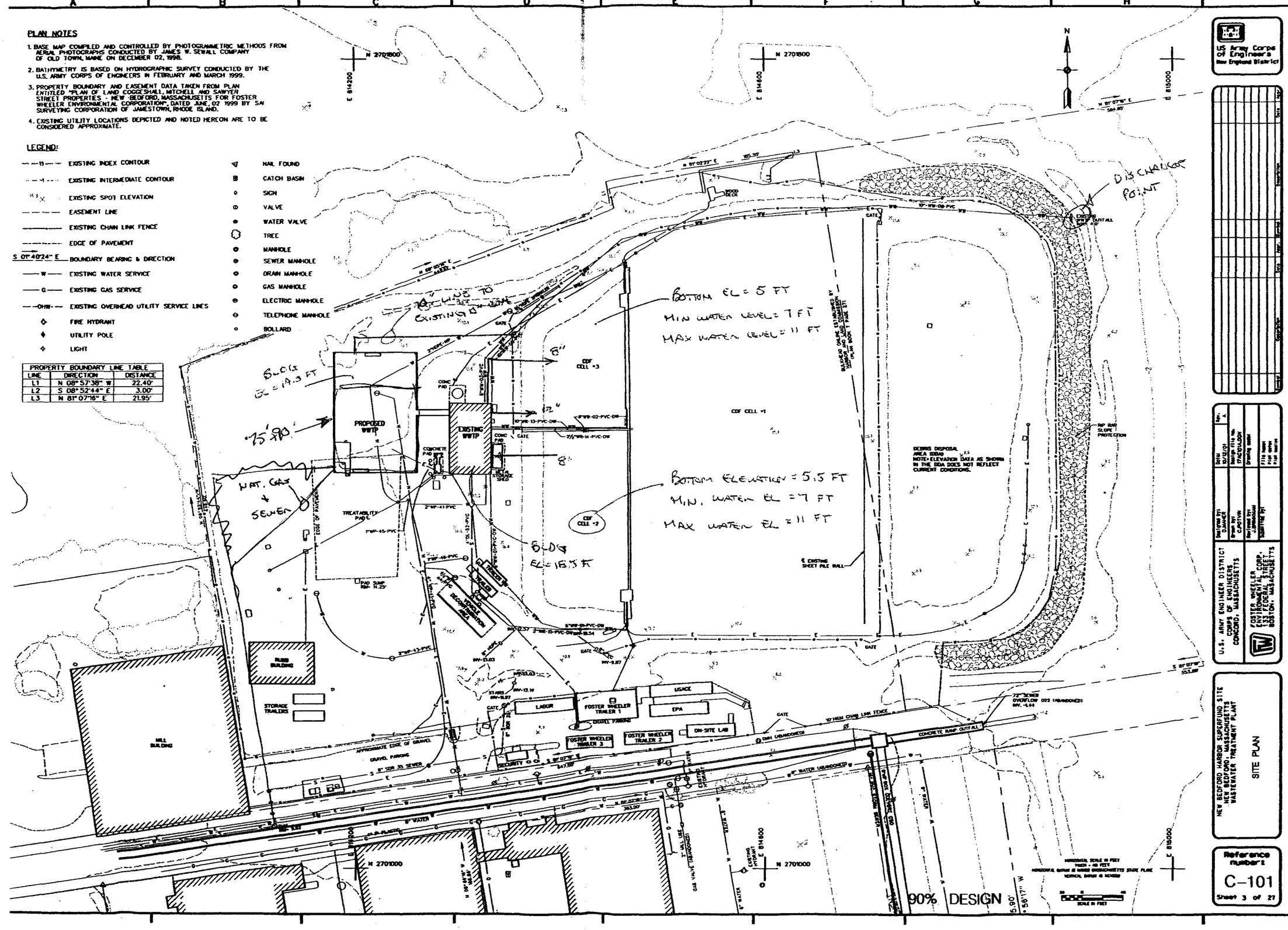

US Army Corps of Engineers
New England District

U.S. ARMY ENGINEER DISTRICT
CORPS OF ENGINEERS
CONCORD, MASSACHUSETTS

FOSTER WHEELER ENVIRONMENTAL CORP.
133 FEDERAL STREET
BOSTON, MASSACHUSETTS

NEW BEDFORD HARBOR SUPERFUND SITE
NEW BEDFORD, MASSACHUSETTS
WASTEWATER TREATMENT PLANT

SITE PLAN

Reference number:
C-101
Sheet 3 of 27

By: JJB 10/29/01
Chkd: CG 6/20/02

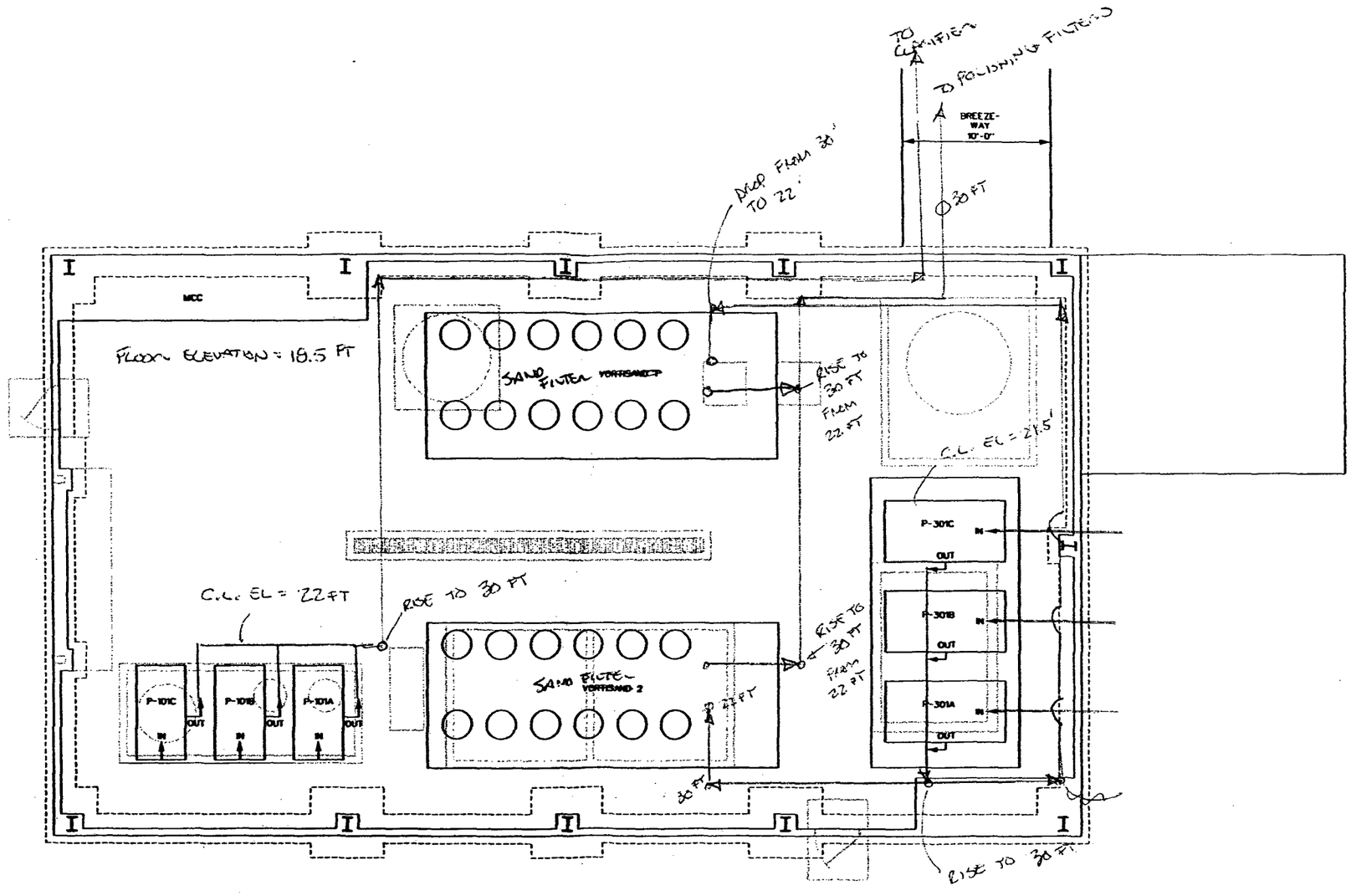

FLOOR PLAN

25 + 28 + 40 + 10 + 10
110

SCALE 1/4"=1'-0"

US Army Corps of Engineers New England District

U.S. ARMY ENGINEER DISTRICT
CORPS OF ENGINEERS
CONCORD, MASSACHUSETTS

FOSTER WHEELER ENVIRONMENTAL CORP.
133 FEDERAL STREET,
BOSTON, MASSACHUSETTS

NEW BEDFORD HARBOR SUPERFUND SITE
NEW BEDFORD, MASSACHUSETTS
WASTEWATER TREATMENT PLANT

GENERAL ARRANGEMENT/
EQUIPMENT LAYOUT
FEED PUMPS (EXISTING WTP)

Reference number:
M-101
Sheet 9 of 27

By: JJB 4/29/01
Ckd: GG 6/20/02

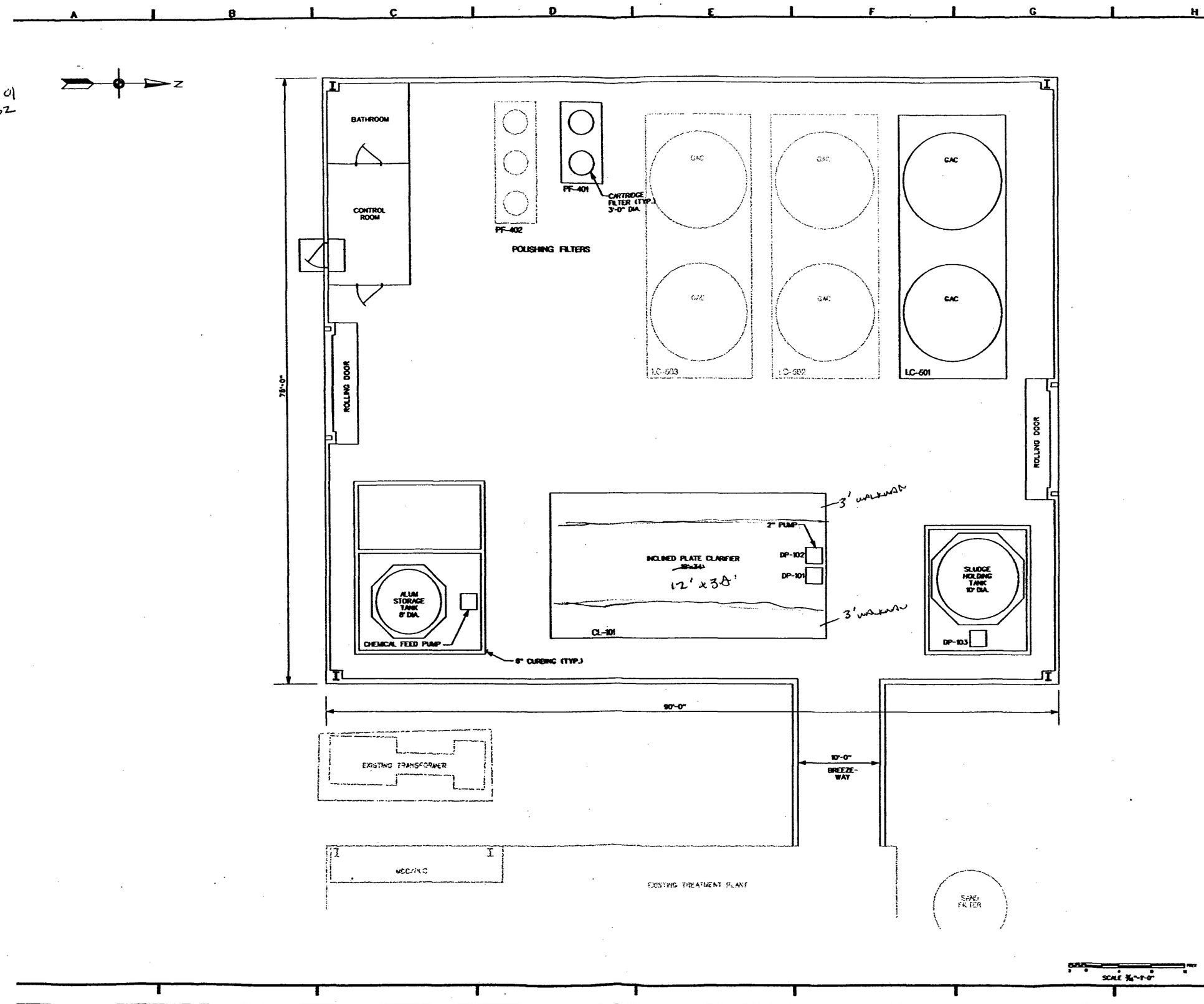

US Army Corps of Engineers
New England District

U.S. ARMY ENGINEER DISTRICT
CORPS OF ENGINEERS
CONCORD, MASSACHUSETTS

FOSTER WHEELER ENVIRONMENTAL CORP.
133 FEDERAL STREET
BOSTON, MASSACHUSETTS

NEW BEDFORD HARBOR SUPERFUND SITE
NEW BEDFORD, MASSACHUSETTS
WASTEWATER TREATMENT PLANT

GENERAL ARRANGEMENT / EQUIPMENT LAYOUT
PROCESS EQUIPMENT

Reference number:
M-102
Sheet 10 of 27

CALCULATION COVER SHEET

PROJECT New Bedford Harbor Superfund Site OU#1

SUBJECT Clarifier Slurry Transfer and Recycle Pumps (DP-101 & DP-102)

CLIENT U.S. Army Corps of Engineers – New England District (USACE – NED)

CALCULATION NO. P-06 PROJECT NO. 5197.1720.3392

NO OF SHEETS 18 DESIGN LEVEL _____

CALCULATION BY OTHERS _____ YES X NO

PREPARER E. Griffin

REVIEWED BY _____ DATE 6-20-02

ASSUMPTIONS THAT REQUIRE CONFIRMATION _____ YES X NO

ASSUMPTIONS CONFIRMED BY _____ DATE _____

PRINT NAME, DATE AND INITIAL

Rev No	Affected Sheets	Prepared by Date	Checked by Date	Verified by Date

by: EG 6/19/02
JB 6/20/02

I. Scope and Purpose

Determine the head and air requirements for: (1) the clarifier slurry transfer pump DP-101 which will be used to transfer underflow from the clarifier 20 feet to the slurry holding tank TK-101 via 2-inch plastic piping; and (2) the slurry recycle pump DP-102 which will be used to recycle slurry from the bottom of the clarifier up 15 feet to the back of the clarifier via 2-inch plastic piping. DP-102 can also be used as a spare clarifier slurry transfer pump if DP-101 fails. Head losses will be determined for the 2-inch piping and fittings assuming the pump DP-101 will be operating at a maximum flow rate of 100 gpm, and the pump DP-102 will be operating at a maximum flow rate of 20 gpm. Plot total change in head for each pump on the vendor pump performance curve.

II. References

Literature:

1. *Flow of Fluids through Valves, Fittings, and Pipe (Technical Paper No. 410)*, 25th Printing, Crane Co., 1991.

2. Wilden flow curves for Rubber-Fitted T8-2" Plastic Pump.

Design Documents and Drawings:

1. *Final Basis of Design/Design Analysis Report (100%) 700 to 2,000 GPM Water Treatment System, New Bedford Harbor Superfund Site*, Foster Wheeler Environmental Corporation, June 2002.

2. Drawing M-102, General Arrangement/Equipment Layout (New WTP).

III. Assumptions

1. Maximum flow rate of 100 gpm for both DP-101 and DP-102, although DP-102 will be operating at a flow rate of 20 gpm. Since DP-102 will be used as a backup to DP-101, it will be required to deliver performance equal to that of DP-101.
2. Piping consists of 2-inch PVC pipe.
3. Assume clean commercial steel pipe which will result in conservative friction losses compared to the plastic pipe that will be used.
4. Assume slurry being pumped has flow characteristics that are equivalent to water since solids concentrations are low (less than 5%).

IV. Solution

See attached calculation.

V. Results Summary

The Wilden T8-2" plastic pump will provide 100 gpm with an air consumption rate of approximately 50 scfm at 40 psig. The same pump will also provide 20 gpm with an air consumption rate of approximately 10 scfm at 10 psig.

FOSTER WHEELER ENVIRONMENTAL CORPORATION

BY EG DATE 6/19/02 SHEET 3 OF 18

CHKD. BY JB DATE 6-20-02 OFS NO. DEPT. NO.

CLIENT USACE

PROJECT NBH Superfund Site - Water Treatment Facility

SUBJECT Pumps DP-101 + DP-102

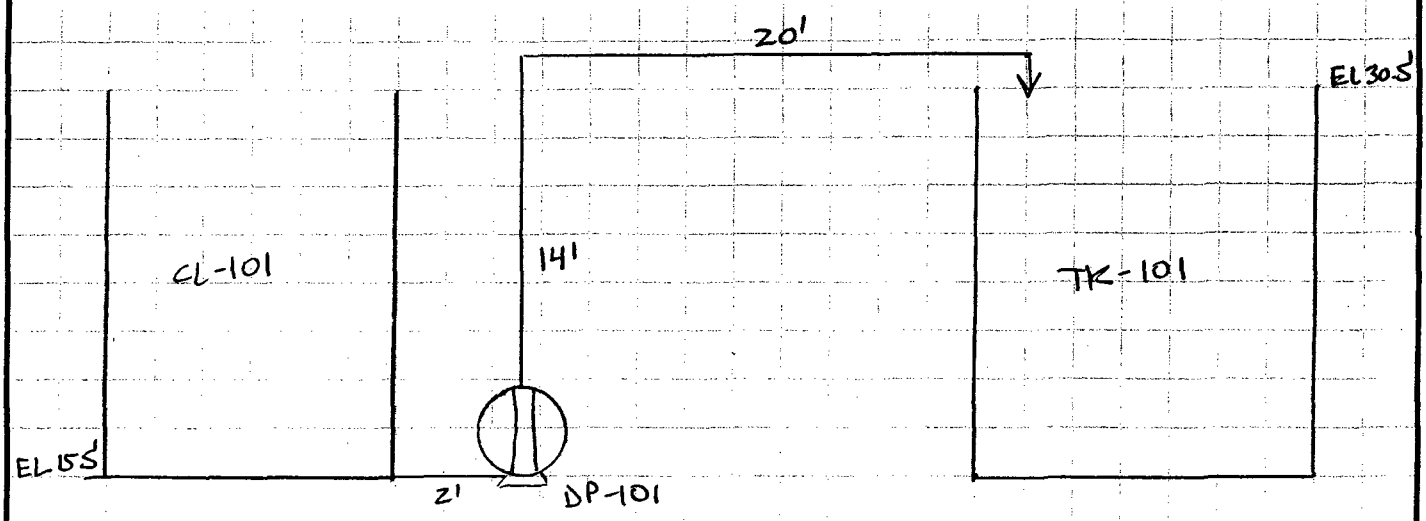

$\Delta Z = 15$ Ft
$L_1 = 36$ Ft

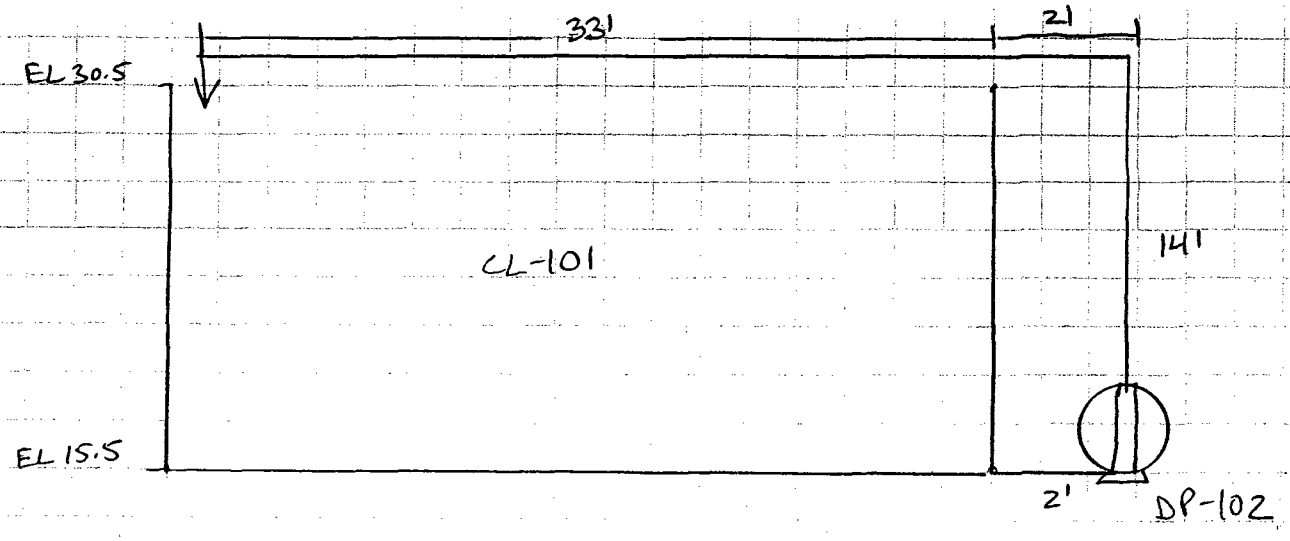

$\Delta Z = 15$ Ft
$L_2 = 51$ Ft

FOSTER WHEELER ENVIRONMENTAL CORPORATION

BY EG DATE 6/19/02 SHEET 4 OF 18

CHKD. BY JB DATE 6-20-02 OFS NO. DEPT. NO.

CLIENT USACE

PROJECT NBH Superfund Site - Water Treatment Facility

SUBJECT Pumps DP-101 + DP-102

1. Clarifier slurry transfer pump DP-101 will be used to transfer underflow from the clarifier 20 ft to the slurry holding tank TK-101 (10 ft diam x 15 ft high) via 2-inch plastic piping.

2. Slurry recycle pump DP-102 will be used to recycle slurry from the bottom of the clarifier up 15 ft to the back of the clarifier (a distance of 33 ft) via 2-inch plastic piping.

3. For both cases, $\Delta Z = 30.5' - 15.5' = 15$ ft

Bernoulli's Eqn:

$$\frac{P}{\rho} + \frac{V^2}{2g} + Z = \text{total head}$$

$$\frac{P_1}{\rho} + \frac{V_1^2}{2g} + Z_1 = \frac{P_2}{\rho} + \frac{V_2^2}{2g} + Z_2 + h_L$$

$\frac{P}{\rho}$ = pressure head

$\frac{V^2}{2g}$ = velocity head

Z = elevation (potential head)

h_L = head loss between points 1 and 2

Darcy-Weisbach formula (head loss for turbulent flow in pipes - Re > 3000):

$$h_L = f \frac{L}{D} \frac{V^2}{2g}$$

FOSTER WHEELER ENVIRONMENTAL CORPORATION

BY EG DATE 6/19/02 SHEET 5 OF 18

CHKD. BY JB DATE 6-20-02 OFS NO. DEPT. NO.

CLIENT USACE

PROJECT NBH Superfund Site - Water Treatment Facility

SUBJECT Pumps DP-101 + DP-102

Head loss for pipe, transitions, and fittings:

$$h_L = K \frac{V^2}{2g}$$

$$\therefore \boxed{K = f \frac{L}{D}} = \text{resistance coefficient}$$

$$h_L = K \frac{(Q^2/A^2)}{2g}$$

$$h_L = K \frac{Q^2}{2g\left(\frac{\pi d^2}{4}\right)^2}$$

if: $g = 32.2\ ft/s^2$

Q = flow rate (gpm)

d = pipe diameter (in)

$$\boxed{h_L = \frac{0.00259 K Q^2}{d^4}}$$ Crane's pg 3-4

Find K-factor for pipe fittings - Crane's pg A-26 to A-29. For 2-inch pipe, friction factor $f_T = 0.019$. Assume same fittings for both DP-101 + DP-102 piping.

Element	Qty	Element K-factor	Extended K-factor
entrance	1	0.78	0.78
elbow	4	$30 f_T$	2.28
ball valve	2	$3 f_T$	0.11
check valve	1	$50 f_T$	0.95
exit	1	1.0	1.0
			$\boxed{\Sigma\ 5.12}$

FOSTER WHEELER ENVIRONMENTAL CORPORATION

BY EG DATE 6/19/02 SHEET 6 OF 18

CHKD. BY JB DATE 6-20-02 OFS NO. DEPT. NO.

CLIENT USACE

PROJECT NBH Superfund Site - Water Treatment Facility

SUBJECT Pumps DP-101 + DP-102

Determine Reynold's number for:

$Q_1 = 100$ gpm (DP-101)

$Q_2 = 20$ gpm (DP-102)

$$\boxed{Re = \frac{50.6\,Q\rho}{d\mu}}$$ Crane's pg 3-2

where: Q = flow rate (gpm)

ρ = density H_2O at 60°F = 62.4 pcf Cranes pg A-6

d = pipe diameter (in)

μ = viscosity H_2O at 60°F = 1.1 centipoise Crane's pg A-3

$$Re_{Q_1} = \frac{(50.6)(100)(62.4)}{(2)(1.1)} = \boxed{143{,}520}$$

$$Re_{Q_2} = \frac{(50.6)(20)(62.4)}{(2)(1.1)} = \boxed{28{,}704}$$

Friction factors for 2-inch pipe for each flow rate:

$f_{Q_1} = 0.021$

$f_{Q_2} = 0.026$

Crane's pg A-25

K-factor for pipes L_1 + L_2:

$$K_{L_1} = 0.021\left(\frac{36\,ft}{2\,in \cdot \frac{ft}{12\,in}}\right) = \boxed{4.54}$$

$$K_{L_2} = 0.026\left(\frac{51\ ft}{2in \cdot \frac{ft}{12in}}\right) = \boxed{7.96}$$

K-factors for entire systems (pipe + fittings):

$$K_1 = 4.54 + 5.12 = \boxed{9.66}$$

$$K_2 = 7.96 + 5.12 = \boxed{13.08}$$

$$\Delta Head = \cancel{\frac{\Delta P}{\rho}}^{0} + \cancel{\frac{\Delta V^2}{2g}}^{0} + \Delta Z + h_L$$

$$h_L = \frac{0.00259\ KQ^2}{d^4}, \quad \Delta Z = 15\ ft$$

$$\Delta H_{DP-101} = \frac{0.00259(9.66)(100)^2}{(2)^4} + 15\ ft = \boxed{31\ ft}$$

$$\Delta H_{DP-102} = \frac{0.00259(13.08)(20)^2}{(2)^4} + 15\ ft = \boxed{16\ ft}$$

Plot on pump curve for Wilden T8-2":

DP-101: Air consumption = 50 scfm at 40 psig.

DP-102: Air consumption ≈ 10 scfm at 10 psig.

by: EG 6/19/02
JB 6/20/02

Catalog : Plastic Pumps : T8 - 2" (50.8 mm) Plastic Pump : Flow Curves

Learn more about how to read a Wilden flow curve.

RUBBER-FITTED T8 PLASTIC PUMP

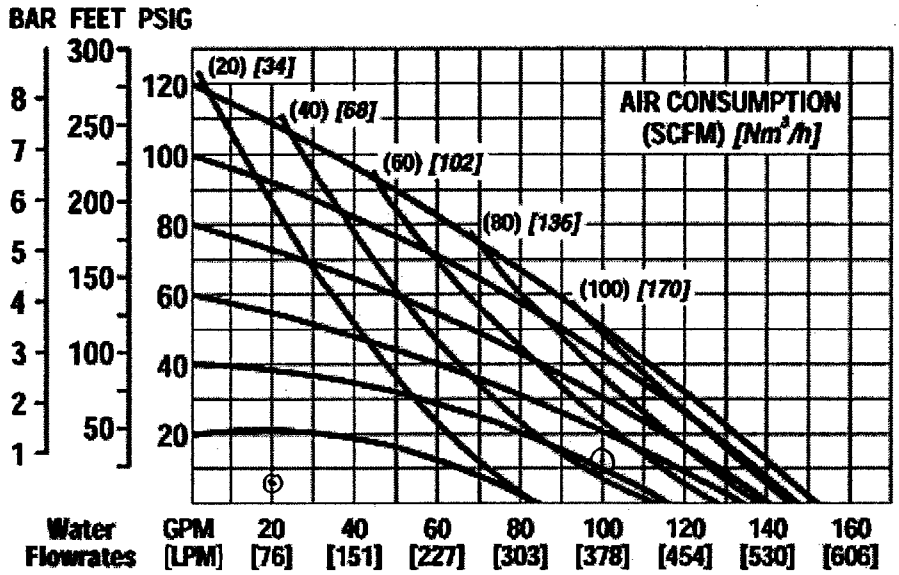

TEFLON®-FITTED T8 PLASTIC PUMP

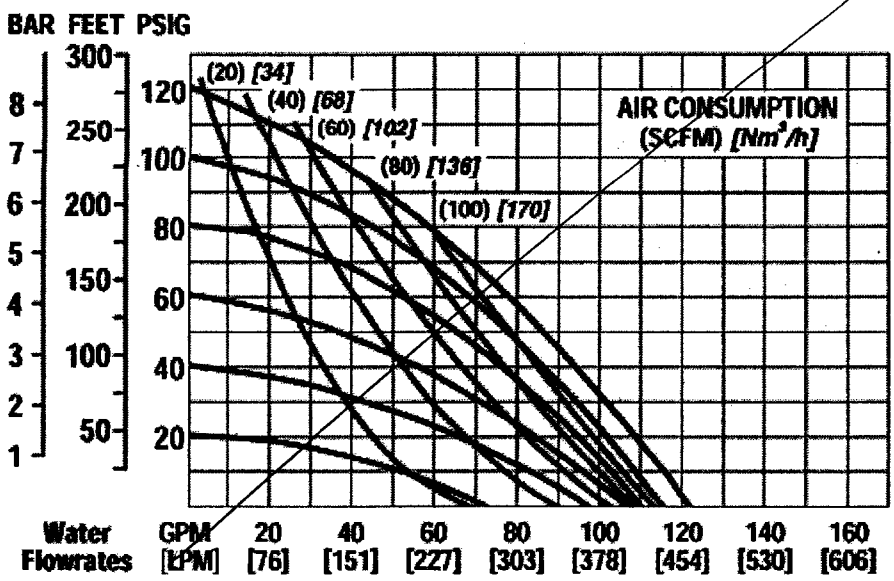

by: EG 6/19/02
JB 6/20/02

Catalog : Plastic Pumps : T8 - 2" (50.8 mm) Plastic Pump : Specifications

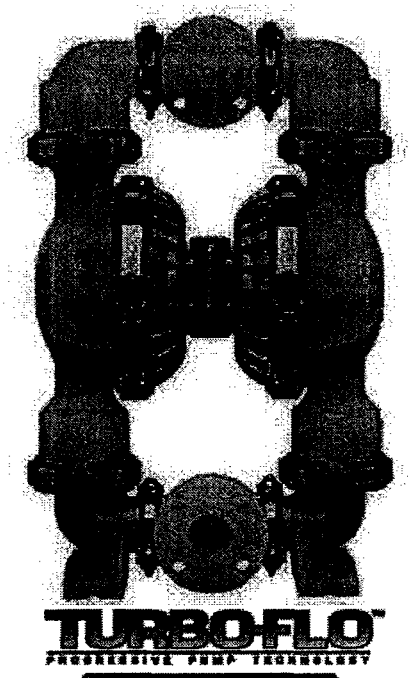

Click to Purchase

Flow Curves Drawings Pump User's Guide

Wilden T8 - 2" (50.8 mm) Plastic Pump

FLOW RATE TO 590.5 LPM (156 GPM)
MAX PRESSURE = 8.6 BAR (125 PSI)

WETTED HOUSINGS
(Water Chambers and Manifolds)

Material	Ship Wt
Polyproylene	35.4 kg (77.0 lbs)
PVDF	44.6 kg (97.0 lbs)

NON-WETTED HOUSINGS

Description	Material
Center Block	Polypropylene, Aluminum, Nickel-plated Aluminum, or Stainless Steel
Air Valve	Brass, Teflon®-coated Brass, Nickel-plated Brass, or Stainless Steel

MAXIMUM SUCTION LIFT CAPABILITY
5.8 m (19')

MAXIMUM DIAMETER SOLIDS
6.35 mm (1/4")

ELASTOMER OPTIONS

Material	Temperature Limits
Buna-N®	-12.2 (+10) to +65.6 (+150) °C (F°)
Neoprene	-17.8 (+0) to +93.3 (+200) °C (F°)
Nordel®	-51.1 (-60) to +137.8 (+280) °C (F°)
Polyurethane	-12.2 (+10) to +65.6 (+150) °C (F°)
Saniflex™	-28.9 (+20) to +104.4 (+220) °C (F°)
Teflon® PTFE	+4.4 (+40) to +104.4 (+220) °C (F°)
Viton®	-40 (-40) to +176.7 (+350) °C (F°)
Wil-Flex™	-40 (-40) to +107.2 (+225) °C (F°)

DXF DRAWINGS (CAD REQUIRED)

T8 Turbo-Flo™ Plastic 279 k

ENGINEERING OPERATION & MAINTENANCE MANUAL

T8/A8 Plastic 766 k

BLACK & WHITE FLYERS (PDF FILE)

T8 Plastic Pump 117 k

GENERAL SPECIFICATIONS (PDF FILE)

by: EG 6/19/02
JB 6/20/02

Catalog : Plastic Pumps : T8 - 2" (50.8 mm) Plastic Pump : Dimensional Drawings

Dimensions for T8 - 2" (50.8 mm) Plastic Pump

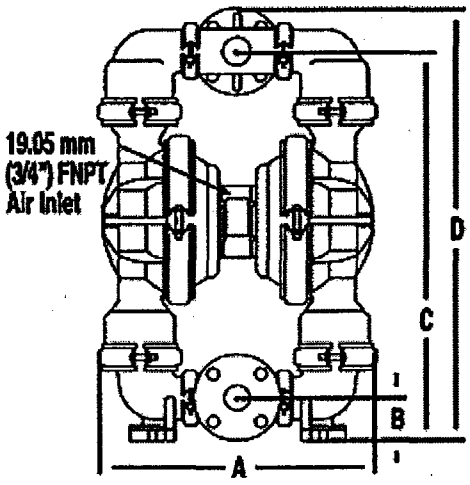

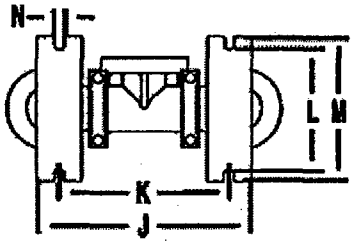

Flange
150 pound class
50.8 mm (2") I.D.

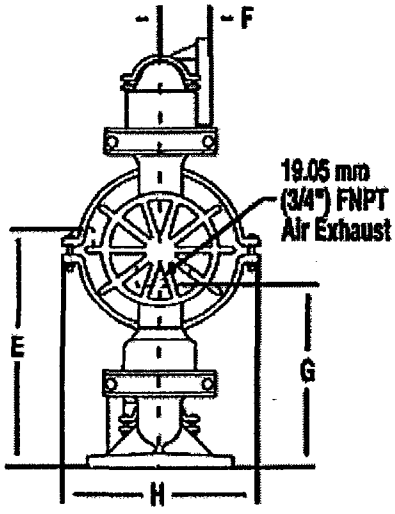

DIMENSIONS - T8 PLASTIC

ITEM	METRIC (mm)	STANDARD (inch)
A	491.3	19 11/32
B	77.0	3 1/32
C	693.0	27 9/32
D	770.0	30 5/16
E	446.1	7 9/16
F	88.9	3 1/2
G	344.5	13 9/16
H	332.6	13 3/32
J	386.6	15 7/32
K	306.4	12 1/16
L	228.6	9
M	254.0	10
N	14.3	9/16
	INT L.	STANDARD
P	60.3 RAD.	2 3/8 RAD.
R	76.2 RAD.	3 1/32 RAD.
S	19.8 DIA.	25/32 DIA.

T-section is designed to accommodate both DIN and ANSI pipe connections.

© Wilden Pump & Engineering Company. All Rights Reserved. Online Tech Support

by: GG 6/19/02
JB 6/20/02

11/18

Summary of Formulas — continued

● Head loss and pressure drop through valves and fittings

Head loss through valves and fittings is generally given in terms of resistance coefficient K which indicates static head loss through a valve in terms of "velocity head", or, equivalent length in pipe diameters L/D that will cause the same head loss as the valve.

From Darcy's formula, head loss through a pipe is:

$$h_L = f \frac{L}{D} \frac{v^2}{2g} \qquad \textbf{Equation 3-5}$$

and head loss through a valve is:

$$h_L = K \frac{v^2}{2g} \qquad \textbf{Equation 3-14}$$

therefore: $$K = f \frac{L}{D} \qquad \textbf{Equation 3-15}$$

To eliminate needless duplication of formulas, the following are all given in terms of K. Whenever necessary, substitute $(f\ L/D)$ for (K).

$$h_L = \frac{522\ Kq^2}{d^4} = 0.002\,59 \frac{KQ^2}{d^4} \qquad \textbf{Equation 3-14}$$

$$h_L = 0.001\,270 \frac{KB^2}{d^4} = 0.000\,0403 \frac{KW^2\overline{V}^2}{d^4}$$

$$\Delta P = 0.000\,1078\ K\rho v^2 = 0.000\,000\,0300\ K\rho V^2$$

$$\Delta P = 3.62 \frac{K\rho q^2}{d^4} = 0.000\,017\,99 \frac{K\rho Q^2}{d^4}$$

$$\Delta P = 0.000\,008\,82 \frac{K\rho B^2}{d^4}$$

$$\Delta P = 0.000\,000\,280 \frac{KW^2\overline{V}}{d^4}$$

$$\Delta P = 0.000\,000\,000\,605 \frac{K(q'_h)^2\ T\ S_g}{d^4\ P'}$$

$$\Delta P = 0.000\,000\,001\,633 \frac{K\ (q'_h)^2\ S_g^2}{d^4\ \rho}$$

For compressible flow with h_L or ΔP greater than approximately 10% of inlet absolute pressure, the denominator should be multiplied by Y^2. For values of Y, see page A-22.

● Pressure drop and flow of liquids of low viscosity using flow coefficient

$$\Delta P = \left(\frac{Q}{C_v}\right)^2 \frac{\rho}{62.4} \qquad \textbf{Equation 3-16}$$

$$Q = C_v \sqrt{\Delta P \frac{62.4}{\rho}} = 7.90\, C_v \sqrt{\frac{\Delta P}{\rho}}$$

$$C_v = Q \sqrt{\frac{\rho}{\Delta P\ (62.4)}} = \frac{29.9\ d^2}{\sqrt{f\,L/D}} = \frac{29.9\ d^2}{\sqrt{K}}$$

$$= \frac{891\ d^4}{(C_v)^2}$$

● Resistance coefficient, K, for sudden and gradual enlargements in pipes

If, $\theta \leq 45°$,

$$K_1 = 2.6 \sin\frac{\theta}{2} (1 - \beta^2)^2 \qquad \textbf{*Equation 3-17}$$

If, $45° < \theta \leq 180°$,

$$K_1 = (1 - \beta^2)^2 \qquad \textbf{*Equation 3-17.1}$$

● Resistance coefficient, K, for sudden and gradual contractions in pipes

If, $\theta \leq 45°$,

$$K_1 = 0.8 \sin\frac{\theta}{2} (1 - \beta^2) \qquad \textbf{*Equation 3-18}$$

If, $45° < \theta \leq 180°$,

$$K_1 = 0.5 \sqrt{\sin\frac{\theta}{2}}\ (1 - \beta^2) \qquad \textbf{*Equation 3-18.1}$$

**Note:* The values of the resistance coefficients (K) in equations 3-17, 3-17.1, 3-18, and 3-18.1 are based on the velocity in the small pipe. To determine K values in terms of the greater diameter, divide the equations by β^4.

● Discharge of fluid through valves, fittings, and pipe; Darcy's formula

Liquid flow: **Equation 3-19**

$$q = 0.0438\ d^2 \sqrt{\frac{h_L}{K}} = 0.525\ d^2 \sqrt{\frac{\Delta P}{K\rho}}$$

$$Q = 19.65\ d^2 \sqrt{\frac{h_L}{K}} = 236\ d^2 \sqrt{\frac{\Delta P}{K\rho}}$$

$$w = 0.0438\,\rho d^2 \sqrt{\frac{h_L}{K}} = 0.525\ d^2 \sqrt{\frac{\Delta P \rho}{K}}$$

$$W = 157.6\,\rho d^2 \sqrt{\frac{h_L}{K}} = 1891\ d^2 \sqrt{\frac{\Delta P \rho}{K}}$$

Compressible flow:

$$q'_h = 40\,700\ Yd^2 \sqrt{\frac{\Delta P\ P'_1}{KT_1\ S_g}} \qquad \textbf{Equation 3-20}$$

$$q'_h = 24\,700\ \frac{Yd^2}{S_g} \sqrt{\frac{\Delta P\ \rho_1}{K}}$$

$$q'_m = 678\ Yd^2 \sqrt{\frac{\Delta P\ P'_1}{KT_1\ S_g}} = 412\ \frac{Yd^2}{S_g} \sqrt{\frac{\Delta P\ \rho_1}{K}}$$

$$q' = 11.30\ Yd^2 \sqrt{\frac{\Delta P P'_1}{KT_1\ S_g}} = 6.87\ \frac{Yd^2}{S_g} \sqrt{\frac{\Delta P \rho_1}{K}}$$

$$w = 0.525\ Yd^2 \sqrt{\frac{\Delta P}{K\overline{V}_1}} \qquad W = 1891\ Yd^2 \sqrt{\frac{\Delta P}{K\overline{V}_1}}$$

Values of Y are shown on page A-22. For K, Y, and ΔP determination, see examples on pages 4-13 and 4-14.

by: EG 6/19/02
JB 6/20/02

12/18

Viscosity of Water and Liquid Petroleum Products[8, 12, 23]

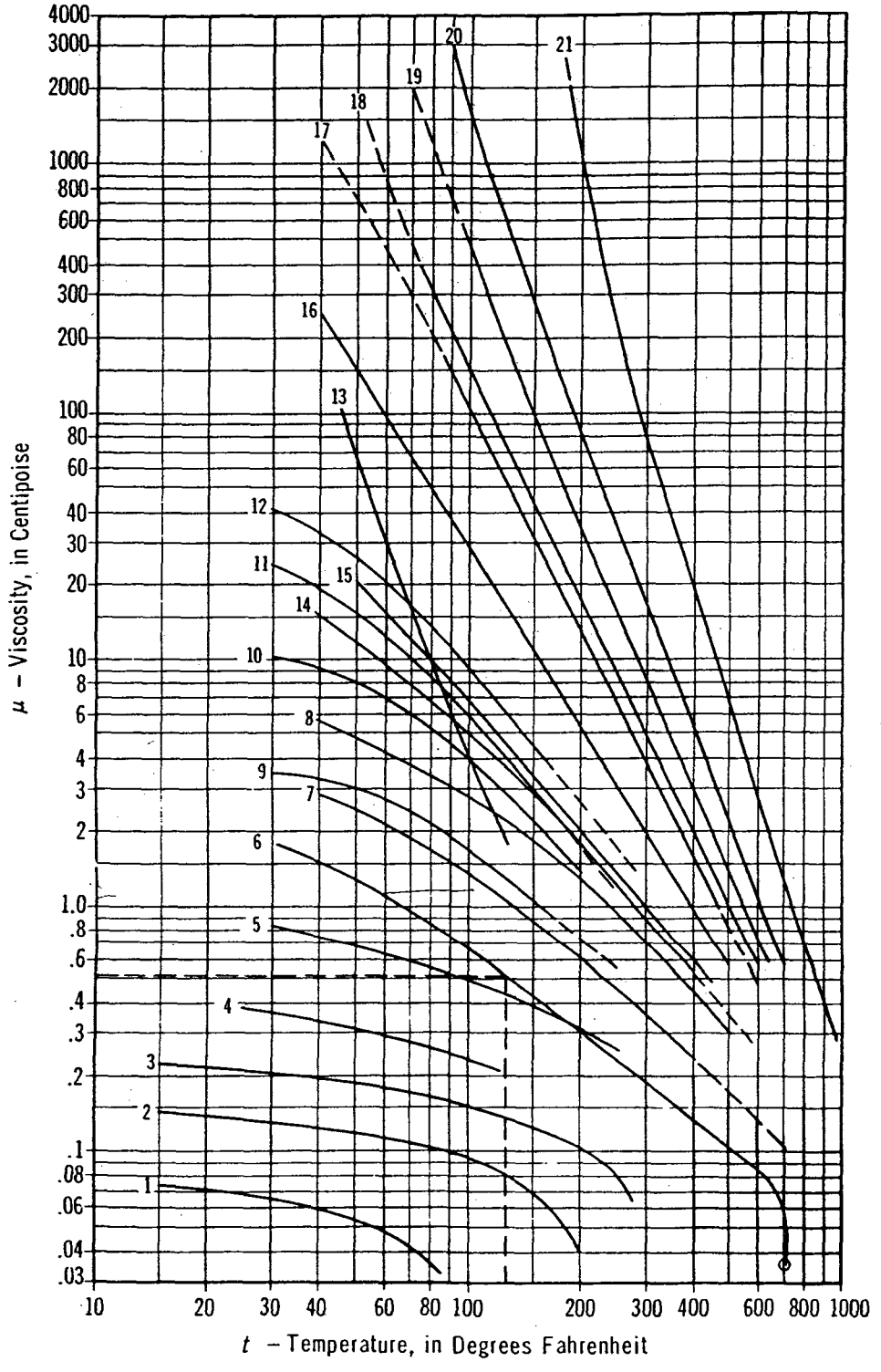

1. Ethane (C_2H_6)
2. Propane (C_3H_8)
3. Butane (C_4H_{10})
4. Natural Gasoline
5. Gasoline
6. Water
7. Kerosene
8. Distillate
9. 48 Deg. API Crude
10. 40 Deg. API Crude
11. 35.6 Deg. API Crude
12. 32.6 Deg. API Crude
13. Salt Creek Crude
14. Fuel 3 (Max.)
15. Fuel 5 (Min.)
16. SAE 10 Lube (100 V.I.)
17. SAE 30 Lube (100 V.I.)
18. Fuel 5 (Max.) or Fuel 6 (Min.)
19. SAE 70 Lube (100 V.I.)
20. Bunker C Fuel (Max.) and M.C. Residuum
21. Asphalt

Data extracted in part by permission from the Oil and Gas Journal.

Example: The viscosity of water at 125 F is 0.52 centipoise (Curve No. 6).

by: EG 6/19/02
JB 6/26/02

13/18

Physical Properties of Water

Temperature of Water t Degrees Fahrenheit	Saturation Pressure P' Pounds per Square Inch Absolute	Specific Volume $\overline{V}$ Cubic Feet Per Pound	Weight Density ρ Pounds per Cubic Foot	Weight Pounds Per Gallon
32	0.08859	0.016022	62.414	8.3436
40	0.12163	0.016019	62.426	8.3451
50	0.17796	0.016023	62.410	8.3430
60	0.25611	0.016033	62.371	8.3378
70	0.36292	0.016050	62.305	8.3290
80	0.50683	0.016072	62.220	8.3176
90	0.69813	0.016099	62.116	8.3037
100	0.94924	0.016130	61.996	8.2877
110	1.2750	0.016165	61.862	8.2698
120	1.6927	0.016204	61.7132	8.2498
130	2.2230	0.016247	61.550	8.2280
140	2.8892	0.016293	61.376	8.2048
150	3.7184	0.016343	61.188	8.1797
160	4.7414	0.016395	60.994	8.1537
170	5.9926	0.016451	60.787	8.1260
180	7.5110	0.016510	60.569	8.0969
190	9.340	0.016572	60.343	8.0667
200	11.526	0.016637	60.107	8.0351
210	14.123	0.016705	59.862	8.0024
212	14.696	0.016719	59.812	7.9957
220	17.186	0.016775	59.613	7.9690
240	24.968	0.016926	59.081	7.8979
260	35.427	0.017089	58.517	7.8226
280	49.200	0.017264	57.924	7.7433
300	67.005	0.01745	57.307	7.6608
350	134.604	0.01799	55.586	7.4308
400	247.259	0.01864	53.648	7.1717
450	422.55	0.01943	51.467	6.8801
500	680.86	0.02043	48.948	6.5433
550	1045.43	0.02176	45.956	6.1434
600	1543.2	0.02364	42.301	5.6548
650	2208.4	0.02674	37.397	4.9993
700	3094.3	0.03662	27.307	3.6505

Specific gravity of water at 60 F = 1.00

Weight per gallon is based on 7.48052 gallons per cubic foot.

All data on volume and pressure are abstracted from ASME Steam Tables (1967), with permission of publisher, The American Society of Mechanical Engineers, New York, N.Y.

by: EK 6/19/02
JB 6/20/02

14/18

Friction Factors for Clean Commercial Steel Pipe[18]

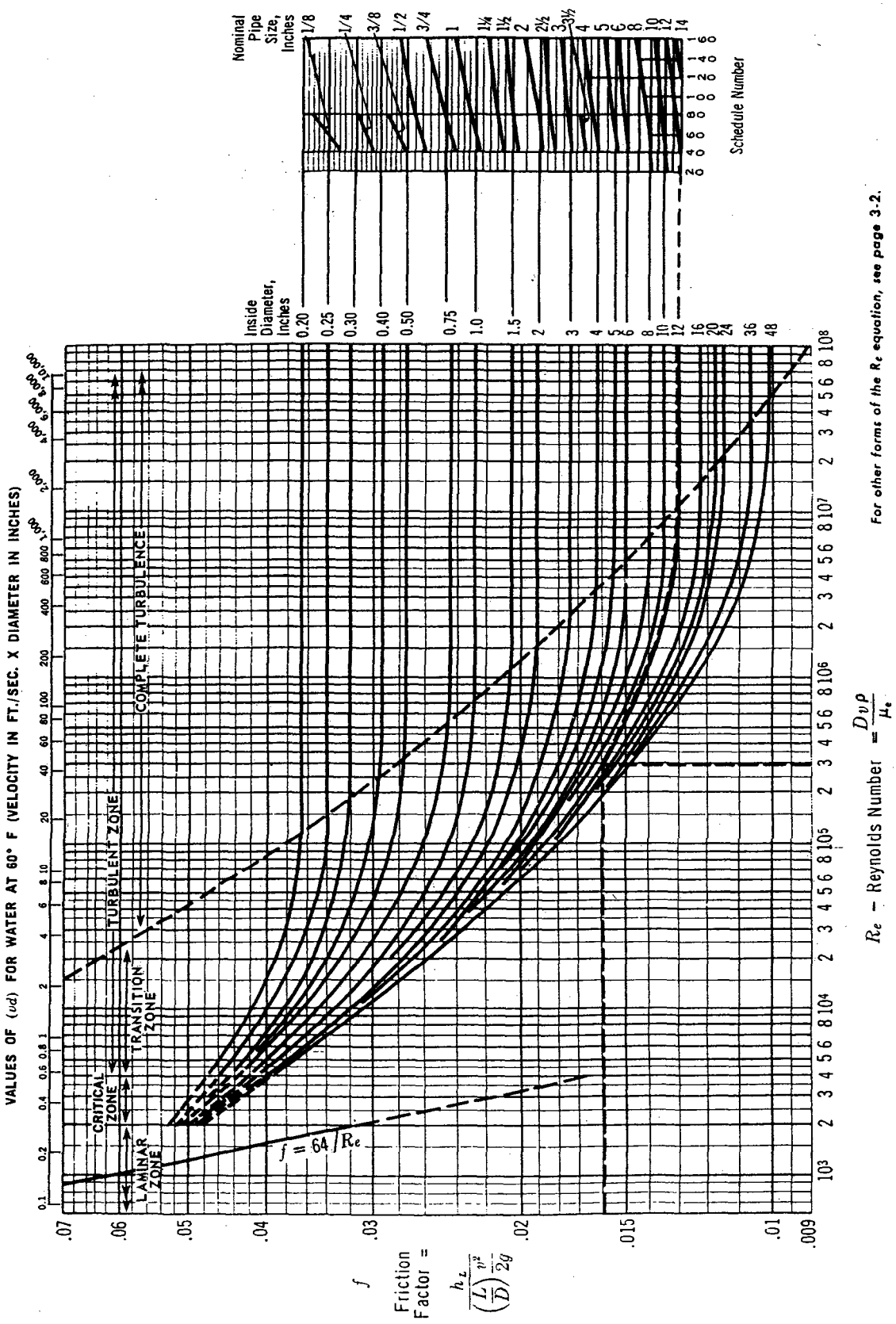

Problem: Determine the friction factor for 12-inch Schedule 40 pipe at a flow having a Reynolds number of 300,000.

Solution: The friction factor (f) equals 0.016.

by: EE 6/19/02
JB 6/20/02

15/18

"K" FACTOR TABLE—SHEET 1 of 4

Representative Resistance Coefficients (K) for Valves and Fittings

("K" is based on use of schedule pipe as listed on page 2-10)

PIPE FRICTION DATA FOR CLEAN COMMERCIAL STEEL PIPE WITH FLOW IN ZONE OF COMPLETE TURBULENCE

Nominal Size	½"	¾"	1"	1¼"	1½"	2"	2½, 3"	4"	5"	6"	8-10"	12-16"	18-24"
Friction Factor (f_T)	.027	.025	.023	.022	.021	.019	.018	.017	.016	.015	.014	.013	.012

FORMULAS FOR CALCULATING "K" FACTORS* FOR VALVES AND FITTINGS WITH REDUCED PORT

(Ref: Pages 2-11 and 3-4)

- **Formula 1**

$$K_2 = \frac{0.8\left(\sin\frac{\theta}{2}\right)(1-\beta^2)}{\beta^4} = \frac{K_1}{\beta^4}$$

- **Formula 2**

$$K_2 = \frac{0.5\,(1-\beta^2)\sqrt{\sin\frac{\theta}{2}}}{\beta^4} = \frac{K_1}{\beta^4}$$

- **Formula 3**

$$K_2 = \frac{2.6\left(\sin\frac{\theta}{2}\right)(1-\beta^2)^2}{\beta^4} = \frac{K_1}{\beta^4}$$

- **Formula 4**

$$K_2 = \frac{(1-\beta^2)^2}{\beta^4} = \frac{K_1}{\beta^4}$$

- **Formula 5**

$$K_2 = \frac{K_1}{\beta^4} + \text{Formula 1} + \text{Formula 3}$$

$$K_2 = \frac{K_1 + \sin\frac{\theta}{2}\left[0.8\,(1-\beta^2) + 2.6\,(1-\beta^2)^2\right]}{\beta^4}$$

- **Formula 6**

$$K_2 = \frac{K_1}{\beta^4} + \text{Formula 2} + \text{Formula 4}$$

$$K_2 = \frac{K_1 + 0.5\sqrt{\sin\frac{\theta}{2}}\,(1-\beta^2) + (1-\beta^2)^2}{\beta^4}$$

- **Formula 7**

$$K_2 = \frac{K_1}{\beta^4} + \beta\,(\text{Formula 2} + \text{Formula 4}) \text{ when } \theta = 180°$$

$$K_2 = \frac{K_1 + \beta\left[0.5\,(1-\beta^2) + (1-\beta^2)^2\right]}{\beta^4}$$

$$\beta = \frac{d_1}{d_2}$$

$$\beta^2 = \left(\frac{d_1}{d_2}\right)^2 = \frac{a_1}{a_2}$$

Subscript 1 defines dimensions and coefficients with reference to the smaller diameter.
Subscript 2 refers to the larger diameter.

***Use "K" furnished by valve or fitting supplier when available.**

SUDDEN AND GRADUAL CONTRACTION

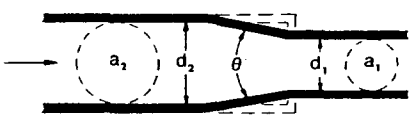

If: $\theta \leq 45°$ . . . . . K_2 = Formula 1
$45° < \theta \leq 180°$ . . . K_2 = Formula 2

SUDDEN AND GRADUAL ENLARGEMENT

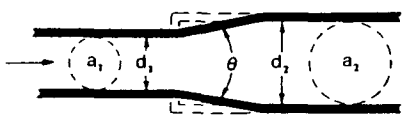

If: $\theta \leq 45°$ . . . . . K_2 = Formula 3
$45° < \theta \leq 180°$ . . . K_2 = Formula 4

by: EG 6/19/02
DB 6/20/02

16/18

"K" FACTOR TABLE—SHEET 2 of 4

Representative Resistance Coefficients (K) for Valves and Fittings

(for formulas and friction data, see page A-26)

("K" is based on use of schedule pipe as listed on page 2-10)

GATE VALVES
Wedge Disc, Double Disc, or Plug Type

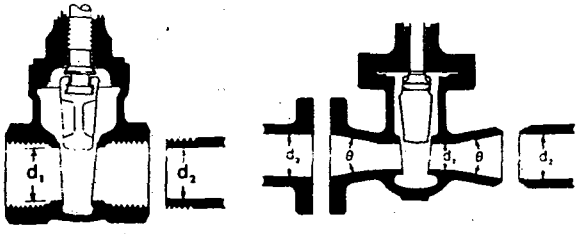

If: $\beta = 1$, $\theta = 0$ . . . . . $K_1 = 8\,f_T$

$\beta < 1$ and $\theta \leq 45°$ . . . . . K_2 = Formula 5

$\beta < 1$ and $45° < \theta \leq 180°$ . . . K_2 = Formula 6

SWING CHECK VALVES

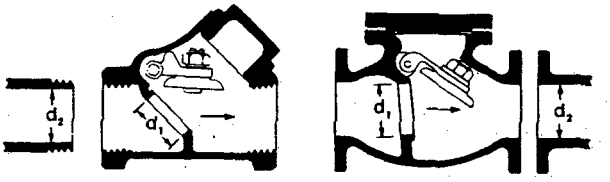

$K = 100\,f_T$

Minimum pipe velocity (fps) for full disc lift $= 35\sqrt{\bar{V}}$

$K = 50\,f_T$

Minimum pipe velocity (fps) for full disc lift $= 60\sqrt{\bar{V}}$ except U/L listed $= 100\sqrt{\bar{V}}$

GLOBE AND ANGLE VALVES

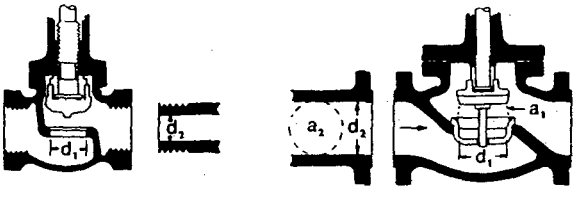

If: $\beta = 1 \ldots K_1 = 340\,f_T$

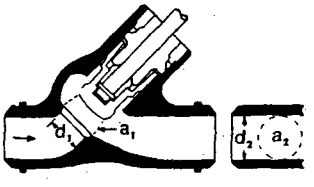

If: $\beta = 1 \ldots K_1 = 55\,f_T$

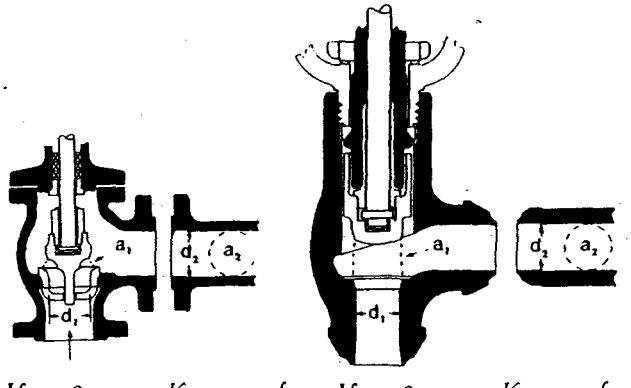

If: $\beta = 1 \ldots K_1 = 150\,f_T$ If: $\beta = 1 \ldots K_1 = 55\,f_T$

All globe and angle valves, whether reduced seat or throttled,

If: $\beta < 1 \ldots K_2$ = Formula 7

LIFT CHECK VALVES

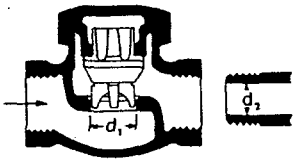

If: $\beta = 1 \ldots K_1 = 600\,f_T$

$\beta < 1 \ldots K_2$ = Formula 7

Minimum pipe velocity (fps) for full disc lift $= 40\,\beta^2\sqrt{\bar{V}}$

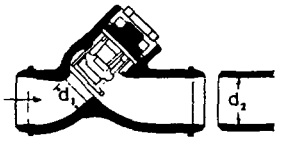

If: $\beta = 1 \ldots K_1 = 55\,f_T$

$\beta < 1 \ldots K_2$ = Formula 7

Minimum pipe velocity (fps) for full disc lift $= 140\,\beta^2\sqrt{\bar{V}}$

TILTING DISC CHECK VALVES

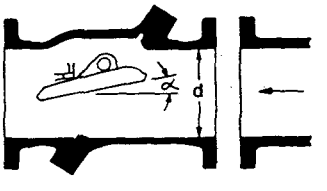

	$\alpha = 5°$	$\alpha = 15°$
Sizes 2 to 8" . . . K =	$40\,f_T$	$120\,f_T$
Sizes 10 to 14" . . . K =	$30\,f_T$	$90\,f_T$
Sizes 16 to 48" . . . K =	$20\,f_T$	$60\,f_T$
Minimum pipe velocity (fps) for full disc lift =	$80\sqrt{\bar{V}}$	$30\sqrt{\bar{V}}$

by: EG 6/19/02
JB 6/20/02

17/18

"K" FACTOR TABLE—SHEET 3 of 4

Representative Resistance Coefficients (K) for Valves and Fittings

(for formulas and friction data, see page A-26)

("K" is based on use of scheduled pipe as listed on page 2-10)

STOP-CHECK VALVES (Globe and Angle Types)

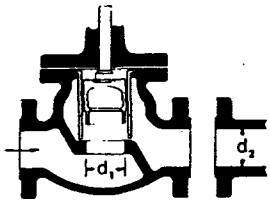

If:
$\beta = 1 \ldots K_1 = 400\, f_T$
$\beta < 1 \ldots K_2 =$ Formula 7

Minimum pipe velocity for full disc lift
$= 55\, \beta^2 \sqrt{V}$

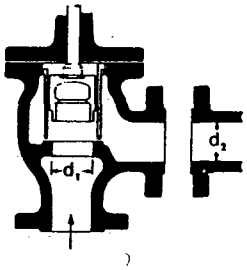

If:
$\beta = 1 \ldots K_1 = 200\, f_T$
$\beta < 1 \ldots K_2 =$ Formula 7

Minimum pipe velocity for full disc lift
$= 75\, \beta^2 \sqrt{V}$

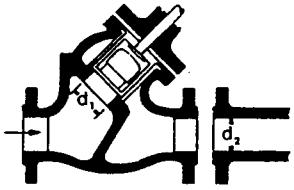

If:
$\beta = 1 \ldots K_1 = 300\, f_T$
$\beta < 1 \ldots K_2 =$ Formula 7

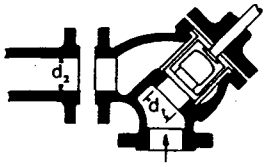

If:
$\beta = 1 \ldots K_1 = 350\, f_T$
$\beta < 1 \ldots K_2 =$ Formula 7

Minimum pipe velocity (fps) for full disc lift
$= 60\, \beta^2 \sqrt{V}$

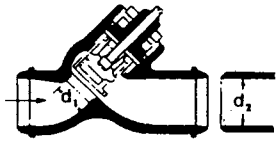

If:
$\beta = 1 \ldots K_1 = 55\, f_T$
$\beta < 1 \ldots K_2 =$ Formula 7

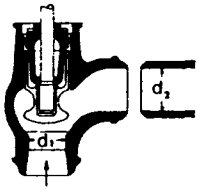

If:
$\beta = 1 \ldots K_1 = 55\, f_T$
$\beta < 1 \ldots K_2 =$ Formula 7

Minimum pipe velocity (fps) for full disc lift
$= 140\, \beta^2 \sqrt{V}$

FOOT VALVES WITH STRAINER

Poppet Disc

$K = 420 f_T$

Minimum pipe velocity (fps) for full disc lift
$= 15 \sqrt{V}$

Hinged Disc

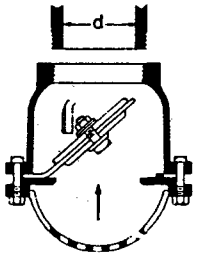

$K = 75 f_T$

Minimum pipe velocity (fps) for full disc lift
$= 35 \sqrt{V}$

BALL VALVES

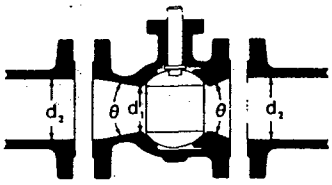

If: $\beta = 1,\ \theta = 0 \ldots\ldots\ldots\ldots K_1 = 3\, f_T$
$\beta < 1$ and $\theta \leq 45° \ldots\ldots\ldots K_2 =$ Formula 5
$\beta < 1$ and $45° < \theta \leq 180° \ldots K_2 =$ Formula 6

BUTTERFLY VALVES

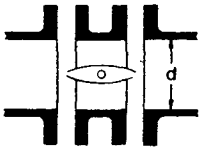

Sizes 2 to 8″ . . . $K = 45\, f_T$
Sizes 10 to 14″ . . . $K = 35\, f_T$
Sizes 16 to 24″ . . . $K = 25\, f_T$

by: CG 6/19/02
JB 6/26/02

15/18

"K" FACTOR TABLE—SHEET 4 of 4

Representative Resistance Coefficients (K) for Valves and Fittings

(for formulas and friction data, see page A-26)

("K" is based on use of schedule pipe as listed on page 2-10)

PLUG VALVES AND COCKS

Straight-Way **3-Way**

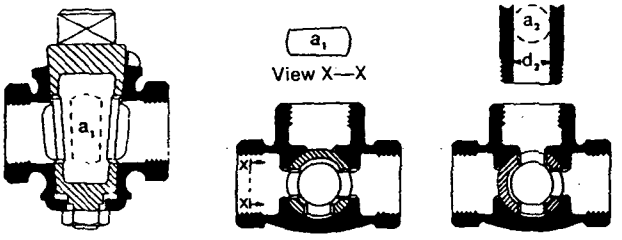

If: $\beta = 1$, $K_1 = 18\, f_T$ | If: $\beta = 1$, $K_1 = 30\, f_T$ | If: $\beta = 1$, $K_1 = 90\, f_T$

If: $\beta < 1 \ldots K_2 =$ Formula 6

MITRE BENDS

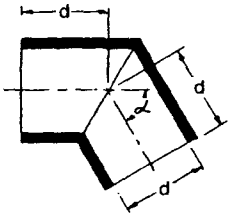

α	K
0°	2 f_T
15°	4 f_T
30°	8 f_T
45°	15 f_T
60°	25 f_T
75°	40 f_T
90°	60 f_T

90° PIPE BENDS AND FLANGED OR BUTT-WELDING 90° ELBOWS

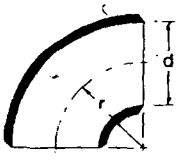

r/d	K	r/d	K
1	20 f_T	8	24 f_T
1.5	14 f_T	10	30 f_T
2	12 f_T	12	34 f_T
3	12 f_T	14	38 f_T
4	14 f_T	16	42 f_T
6	17 f_T	20	50 f_T

The resistance coefficient, K_B, for pipe bends other than 90° may be determined as follows:

$$K_B = (n - 1)\left(0.25\,\pi\, f_T \frac{r}{d} + 0.5\,K\right) + K$$

n = number of 90° bends
K = resistance coefficient for one 90° bend (per table)

CLOSE PATTERN RETURN BENDS

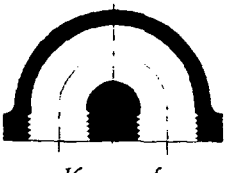

$K = 50\, f_T$

STANDARD ELBOWS

90° 45°

$K = 30\, f_T$ | $K = 16\, f_T$

STANDARD TEES

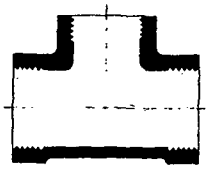

Flow thru run . . . . . $K = 20\, f_T$
Flow thru branch . . . . $K = 60\, f_T$

PIPE ENTRANCE

Inward Projecting

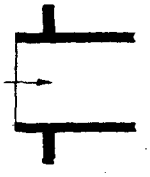

$K = 0.78$

r/d	K
0.00*	0.5
0.02	0.28
0.04	0.24
0.06	0.15
0.10	0.09
0.15 & up	0.04

*Sharp-edged

Flush

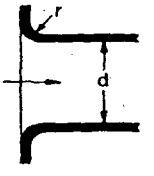

For K, see table

PIPE EXIT

Projecting **Sharp-Edged** **Rounded**

$K = 1.0$ | $K = 1.0$ | $K = 1.0$

CALCULATION COVER SHEET

PROJECT New Bedford Harbor Superfund Site OU#1

SUBJECT Slurry Transfer Pump (DP-103)

CLIENT U.S. Army Corps of Engineers – New England District (USACE – NED)

CALCULATION NO. P-07 PROJECT NO. 5197.1720.3392

NO OF SHEETS 18 DESIGN LEVEL _____

CALCULATION BY OTHERS _____ YES X NO

PREPARER E. Griffin

REVIEWED BY [signature] DATE 6-20-02

ASSUMPTIONS THAT REQUIRE CONFIRMATION _____ YES X NO

ASSUMPTIONS CONFIRMED BY _____ DATE _____

PRINT NAME, DATE AND INITIAL

Rev No	Affected Sheets	Prepared by Date	Checked by Date	Verified by Date

by: EG 6/19/02
JB 6/20/02

I. Scope and Purpose

Determine the head and air requirements for the slurry transfer pump DP-103 which will be used to transfer the slurry from the slurry holding tank TK-101 via 3-inch plastic piping 300 feet to the desanding facility located on the Debris Disposal Area. Head losses will be determined for the 3-inch piping and fittings assuming the pump will be operating at a maximum flow rate of 100 gpm. Plot total change in head on the vendor pump performance curve.

II. References

Literature:

1. *Flow of Fluids through Valves, Fittings, and Pipe (Technical Paper No. 410)*, 25th Printing, Crane Co., 1991.

2. Wilden flow curves for Rubber-Fitted T8-2" Plastic Pump.

Design Documents and Drawings:

1. *Final Basis of Design/Design Analysis Report (100%) 700 to 2,000 GPM Water Treatment System, New Bedford Harbor Superfund Site*, Foster Wheeler Environmental Corporation, June 2002.

2. Drawing M-102, General Arrangement/Equipment Layout (New WTP).

III. Assumptions

1. Maximum flow rate of 100 gpm.
2. Assume slurry will be pumped approximately 300 feet to the sediment desanding facility to be located on the DDA. The discharge line will consist of 3-inch HDPE piping and will be routed aboveground, north of CDF Cell #1, to a termination point at the northwest corner of the DDA.
3. Assume clean commercial steel pipe which will result in conservative friction losses compared to the plastic pipe that will be used.
4. Assume slurry being pumped has flow characteristics that are equivalent to water since solids concentrations are low (less than 5%).

IV. Solution

See attached calculation.

V. Results Summary

The Wilden T8-2" plastic pump will provide 100 gpm with an air consumption rate of approximately 45 scfm at 40 psig.

FOSTER WHEELER ENVIRONMENTAL CORPORATION

BY EG DATE 6/19/02 SHEET 3 OF 18

CHKD. BY JB DATE 6-20-02 OFS NO. DEPT. NO.

CLIENT USACE

PROJECT NBH Superfund Site - Water Treatment Facility

SUBJECT Slurry Transfer Pump DP-103

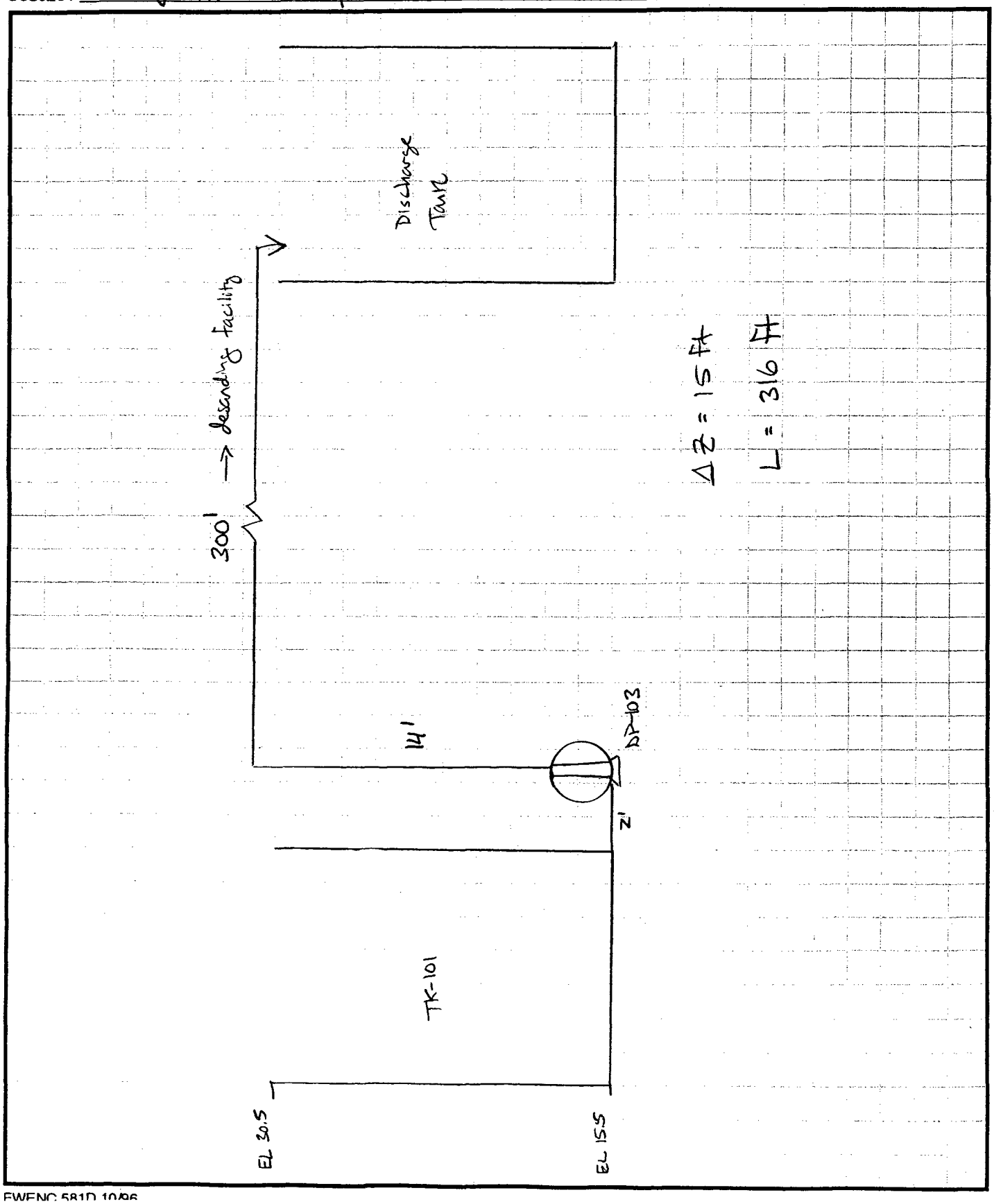

FOSTER WHEELER ENVIRONMENTAL CORPORATION

BY EG DATE 6/19/02 SHEET 4 OF 18

CHKD. BY JB DATE 6-20-02 OFS NO. DEPT. NO.

CLIENT USACE

PROJECT NBH Superfund Site - Water Treatment Facility

SUBJECT Slurry Transfer Pump DP-103

Slurry transfer pump DP-103 will be used to transfer slurry from the slurry holding tank TK-101 (10 ft diam. x 15 ft high) via 3-inch plastic piping 300 ft to the desanding facility on the DDA. Water treatment building floor EL = 15.5 ft. Assume similar floor elevation at the desanding facility. Also assume similar discharge tank height (EL = 30.5 ft).

If tank TK-101 is near-empty, $\Delta Z = 30.5' - 15.5' = 15$ ft.

Bernoulli's Eqn:

$$\frac{P}{\rho} + \frac{V^2}{2g} + Z = \text{total head}$$

$$\frac{P_1}{\rho} + \frac{V_1^2}{2g} + Z_1 = \frac{P_2}{\rho} + \frac{V_2^2}{2g} + Z_2 + h_L$$

$\frac{P}{\rho}$ = pressure head

$\frac{V^2}{2g}$ = velocity head

Z = elevation (potential head)

h_L = head loss between points 1 and 2

Darcy-Weisbach formula (head loss for turbulent flow in pipes - Re > 3000):

$$h_L = f \frac{L}{D} \frac{V^2}{2g}$$

FOSTER WHEELER ENVIRONMENTAL CORPORATION

BY EG DATE 6/19/02 SHEET 5 OF 18

CHKD. BY JB DATE 6-20-02 OFS NO. DEPT. NO.

CLIENT USACE

PROJECT NBM Superfund Site - Water Treatment Facility

SUBJECT Slurry Transfer Pump DP-103

Head loss for pipe, transitions, and fittings:

$$h_L = K \frac{V^2}{2g}$$

$$\therefore \boxed{K = f\frac{L}{D}} = \text{resistance coefficient}$$

$$h_L = K \frac{(Q^2/A^2)}{2g}$$

$$h_L = K \frac{Q^2}{2g\left(\frac{\pi d^2}{4}\right)^2}$$

if: $g = 32.2\ ft/s^2$

Q = flow rate (gpm)

d = pipe diameter (in)

$$\boxed{h_L = \frac{0.00259\,KQ^2}{d^4}}$$ Crane's pg 3-4

Find K-factor for pipe fittings - Crane's pg A-26 to A-29.
For 3-inch pipe, friction factor $f_T = 0.018$.

Element	Qty	Element K-factor	Extended K-factor
entrance	1	0.78	0.78
elbow	10	$30f_T$	5.40
ball valve	2	$3f_T$	0.11
plug valve	1	$18f_T$	0.32
check valve	1	$50f_T$	0.90
exit	1	1.0	1.0
			Σ 8.51

FOSTER WHEELER ENVIRONMENTAL CORPORATION

BY EG DATE 6/19/02 SHEET 6 OF 13

CHKD. BY JB DATE 6-20-02 OFS NO. DEPT. NO.

CLIENT USACE

PROJECT NBH Superfund Site - Water Treatment Facility

SUBJECT Slurry Transfer Pump DP-103

Determine Reynold's number for flow rate:

$$\boxed{Re = \frac{50.6\,Q\rho}{d\,\mu}}$$ Crane's pg 3-2

where Q = flow rate (gpm)

ρ = density H_2O at 60°F = 62.4 pcf Crane's pg A-6

d = pipe diameter (in)

μ = viscocity H_2O at 60°F = 1.1 centipoise Crane's pg A-3

For maximum expected flow rate, Q = 100 gpm:

$$Re = \frac{50.6\,(100)(62.4)}{(3)(1.1)} = \boxed{95{,}680}$$

Friction factor for 3-inch pipe, Q = 100 gpm Crane's pg A-25:

$$\boxed{f = 0.021}$$

K-factor for pipe:

$$K = 0.021\left(\frac{316\ ft}{3in \cdot \frac{ft}{12in}}\right) = \boxed{26.54}$$

K-factor for entire system (pipe + fittings):

$$K = 26.54 + 8.51 = \boxed{35.05}$$

FOSTER WHEELER ENVIRONMENTAL CORPORATION

BY EG DATE 6/19/02 SHEET 7 OF 18

CHKD. BY JB DATE 6-20-02 OFS NO. DEPT. NO.

CLIENT USACE

PROJECT NBH Superfund Site - Water Treatment Facility

SUBJECT Slurry Transfer Pump DP-103

$$\Delta \text{ Head} = \cancel{\frac{\Delta P}{\rho}}^{\to 0} + \cancel{\frac{\Delta V^2}{2g}}^{\to 0} + \Delta Z + h_L$$

$$h_L = \frac{0.00259\, K Q^2}{d^4}, \quad \Delta Z = 15 \text{ ft}$$

$$\Delta H = \frac{0.00259\,(35.05)(100)^2}{(3)^4} + 15 = \boxed{26 \text{ ft}}$$

Plot on pump curve for Wilden T8-2":
Air consumption ≈ 45 scfm at 40 psig.

by: EG 6/19/02
JB 6/20/02

Catalog : Plastic Pumps : T8 - 2" (50.8 mm) Plastic Pump : Flow Curves

Learn more about how to read a Wilden flow curve.

RUBBER-FITTED T8 PLASTIC PUMP

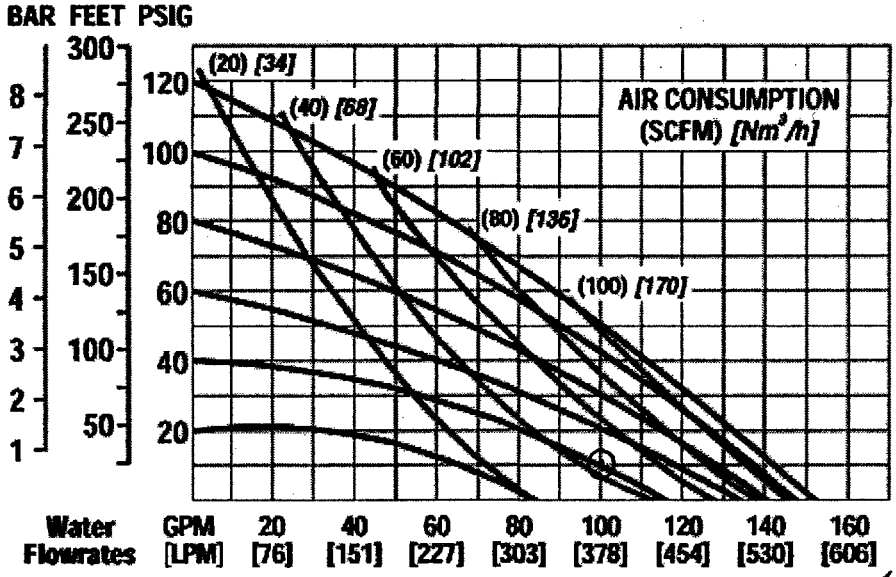

TEFLON®-FITTED T8 PLASTIC PUMP

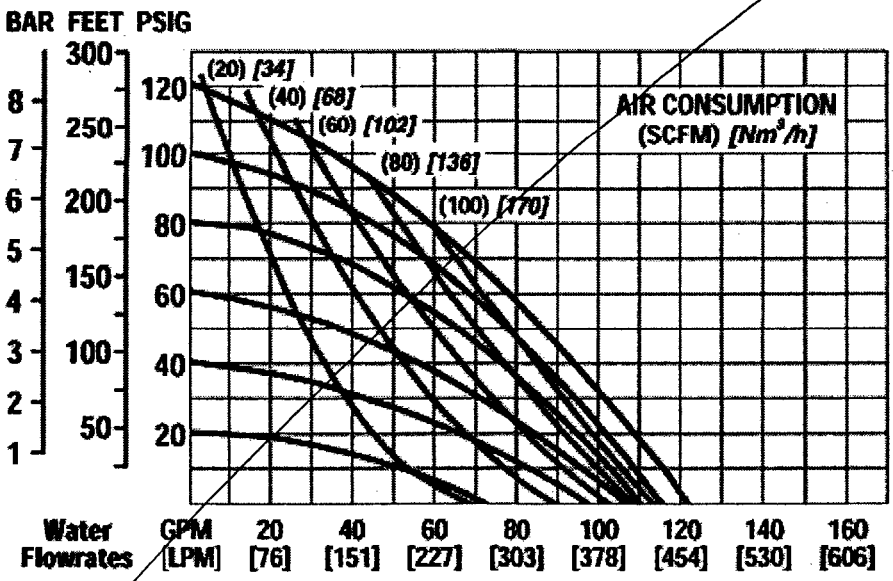

by EG 6/19/02
JB 6/20/02

Catalog : Plastic Pumps : T8 - 2" (50.8 mm) Plastic Pump : Specifications

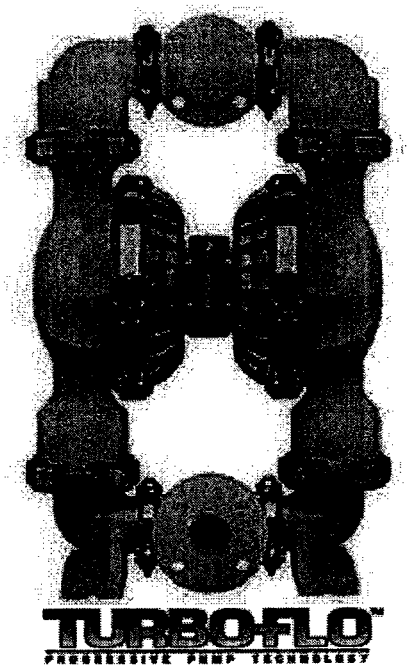

Click to Purchase

Flow Curves Drawings Pump User's Guide

Wilden T8 - 2" (50.8 mm) Plastic Pump

FLOW RATE TO 590.5 LPM (156 GPM)
MAX PRESSURE = 8.6 BAR (125 PSI)

WETTED HOUSINGS
(Water Chambers and Manifolds)

Material	Ship Wt
Polyproylene	35.4 kg (77.0 lbs)
PVDF	44.6 kg (97.0 lbs)

NON-WETTED HOUSINGS

Description	Material
Center Block	Polypropylene, Aluminum, Nickel-plated Aluminum, or Stainless Steel
Air Valve	Brass, Teflon®-coated Brass, Nickel-plated Brass, or Stainless Steel

MAXIMUM SUCTION LIFT CAPABILITY
5.8 m (19')

MAXIMUM DIAMETER SOLIDS
6.35 mm (1/4")

ELASTOMER OPTIONS

Material	Temperature Limits
Buna-N®	-12.2 (+10) to +65.6 (+150) °C (F°)
Neoprene	-17.8 (+0) to +93.3 (+200) °C (F°)
Nordel®	-51.1 (-60) to +137.8 (+280) °C (F°)
Polyurethane	-12.2 (+10) to +65.6 (+150) °C (F°)
Saniflex™	-28.9 (+20) to +104.4 (+220) °C (F°)
Teflon® PTFE	+4.4 (+40) to +104.4 (+220) °C (F°)
Viton®	-40 (-40) to +176.7 (+350) °C (F°)
Wil-Flex™	-40 (-40) to +107.2 (+225) °C (F°)

DXF DRAWINGS (CAD REQUIRED)

T8 Turbo-Flo™ Plastic 279 k

ENGINEERING OPERATION & MAINTENANCE MANUAL

T8/A8 Plastic 766 k

BLACK & WHITE FLYERS (PDF FILE)

T8 Plastic Pump 117 k

GENERAL SPECIFICATIONS (PDF FILE)

by EG 6/19/02
JB 6/20/02

Catalog : Plastic Pumps : T8 - 2" (50.8 mm) Plastic Pump : Dimensional Drawings

Dimensions for T8 - 2" (50.8 mm) Plastic Pump

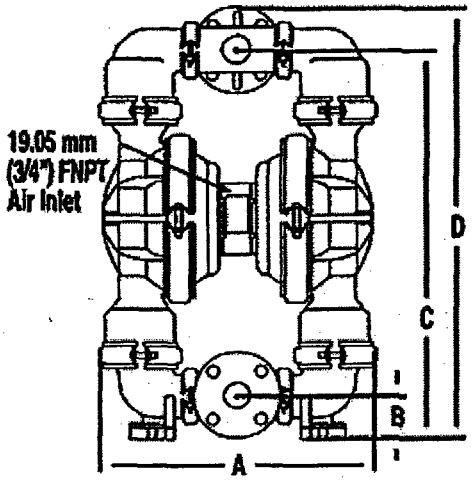

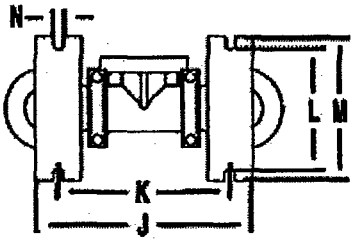

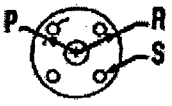

Flange
150 pound class
50.8 mm (2") I.D.

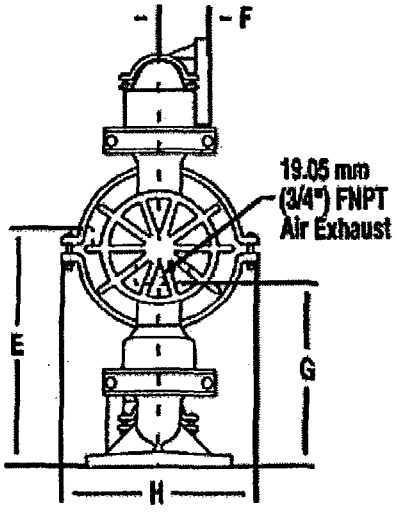

DIMENSIONS - T8 PLASTIC

ITEM	METRIC (mm)	STANDARD (inch)
A	491.3	19 11/32
B	77.0	3 1/32
C	693.0	27 9/32
D	770.0	30 5/16
E	446.1	7 9/16
F	88.9	3 1/2
G	344.5	13 9/16
H	332.6	13 3/32
J	386.6	15 7/32
K	306.4	12 1/16
L	228.6	9
M	254.0	10
N	14.3	9/16
	INT L.	STANDARD
P	60.3 RAD.	2 3/8 RAD.
R	76.2 RAD.	3 1/32 RAD.
S	19.8 DIA.	25/32 DIA.

T-section is designed to accommodate *both DIN and ANSI pipe connections.*

© Wilden Pump & Engineering Company. All Rights Reserved. Online Tech Support

by: EG 6/19/02
B 6/20/02

11/18

Summary of Formulas — continued

Head loss and pressure drop through valves and fittings

Head loss through valves and fittings is generally given in terms of resistance coefficient K which indicates static head loss through a valve in terms of "velocity head", or, equivalent length in pipe diameters L/D that will cause the same head loss as the valve.

From Darcy's formula, head loss through a pipe is:

$$h_L = f \frac{L}{D} \frac{v^2}{2g} \qquad \textit{Equation 3-5}$$

and head loss through a valve is:

$$h_L = K \frac{v^2}{2g} \qquad \textit{Equation 3-14}$$

therefore: $$K = f \frac{L}{D} \qquad \textit{Equation 3-15}$$

To eliminate needless duplication of formulas, the following are all given in terms of K. Whenever necessary, substitute $(f\,L/D)$ for (K).

$$h_L = \frac{522\,Kq^2}{d^4} = 0.002\,59\,\frac{KQ^2}{d^4} \qquad \textit{Equation 3-14}$$

$$h_L = 0.001\,270\,\frac{KB^2}{d^4} = 0.000\,0403\,\frac{KW^2\overline{V}^2}{d^4}$$

$$\Delta P = 0.000\,1078\,K\rho v^2 = 0.000\,000\,0300\,K\rho V^2$$

$$\Delta P = 3.62\,\frac{K\rho q^2}{d^4} = 0.000\,017\,99\,\frac{K\rho Q^2}{d^4}$$

$$\Delta P = 0.000\,008\,82\,\frac{K\rho B^2}{d^4}$$

$$\Delta P = 0.000\,000\,280\,\frac{KW^2\overline{V}}{d^4}$$

$$\Delta P = 0.000\,000\,000\,605\,\frac{K(q'_h)^2\,T\,S_g}{d^4\,P'}$$

$$\Delta P = 0.000\,000\,001\,633\,\frac{K\,(q'_h)^2\,S_g^2}{d^4\,\rho}$$

For compressible flow with h_L or ΔP greater than approximately 10% of inlet absolute pressure, the denominator should be multiplied by Y^2. For values of Y, see page A-22.

Pressure drop and flow of liquids of low viscosity using flow coefficient

$$\Delta P = \left(\frac{Q}{C_v}\right)^2 \frac{\rho}{62.4} \qquad \textit{Equation 3-16}$$

$$Q = C_v\sqrt{\Delta P\,\frac{62.4}{\rho}} = 7.90\,C_v\sqrt{\frac{\Delta P}{\rho}}$$

$$C_v = Q\sqrt{\frac{\rho}{\Delta P\,(62.4)}} = \frac{29.9\,d^2}{\sqrt{f\,L/D}} = \frac{29.9\,d^2}{\sqrt{K}}$$

$$K = \frac{891\,d^4}{(C_v)^2}$$

Resistance coefficient, K, for sudden and gradual enlargements in pipes

If, $\theta \leq 45°$,

$$K_1 = 2.6 \sin\frac{\theta}{2}\,(1 - \beta^2)^2 \qquad \textit{*Equation 3-17}$$

If, $45° < \theta \leq 180°$,

$$K_1 = (1 - \beta^2)^2 \qquad \textit{*Equation 3-17.1}$$

Resistance coefficient, K, for sudden and gradual contractions in pipes

If, $\theta \leq 45°$,

$$K_1 = 0.8 \sin\frac{\theta}{2}\,(1 - \beta^2) \qquad \textit{*Equation 3-18}$$

If, $45° < \theta \leq 180°$,

$$K_1 = 0.5\sqrt{\sin\frac{\theta}{2}}\,(1 - \beta^2) \qquad \textit{*Equation 3-18.1}$$

**Note:* The values of the resistance coefficients (K) in equations 3-17, 3-17.1, 3-18, and 3-18.1 are based on the velocity in the small pipe. To determine K values in terms of the greater diameter, divide the equations by β^4.

Discharge of fluid through valves, fittings, and pipe; Darcy's formula

Liquid flow: *Equation 3-19*

$$q = 0.0438\,d^2\sqrt{\frac{h_L}{K}} = 0.525\,d^2\sqrt{\frac{\Delta P}{K\rho}}$$

$$Q = 19.65\,d^2\sqrt{\frac{h_L}{K}} = 236\,d^2\sqrt{\frac{\Delta P}{K\rho}}$$

$$w = 0.0438\,\rho d^2\sqrt{\frac{h_L}{K}} = 0.525\,d^2\sqrt{\frac{\Delta P\rho}{K}}$$

$$W = 157.6\,\rho d^2\sqrt{\frac{h_L}{K}} = 1891\,d^2\sqrt{\frac{\Delta P\rho}{K}}$$

Compressible flow: *Equation 3-20*

$$q'_h = 40\,700\,Yd^2\sqrt{\frac{\Delta P\,P'_1}{KT_1\,S_g}}$$

$$q'_h = 24\,700\,\frac{Yd^2}{S_g}\sqrt{\frac{\Delta P\,\rho_1}{K}}$$

$$q'_m = 678\,Yd^2\sqrt{\frac{\Delta P\,P'_1}{KT_1\,S_g}} = 412\,\frac{Yd^2}{S_g}\sqrt{\frac{\Delta P\,\rho_1}{K}}$$

$$q' = 11.30\,Yd^2\sqrt{\frac{\Delta P P'_1}{KT_1\,S_g}} = 6.87\,\frac{Yd^2}{S_g}\sqrt{\frac{\Delta P\rho_1}{K}}$$

$$w = 0.525\,Yd^2\sqrt{\frac{\Delta P}{K\overline{V}_1}} \qquad W = 1891\,Yd^2\sqrt{\frac{\Delta P}{K\overline{V}_1}}$$

Values of Y are shown on page A-22. For K, Y, and ΔP determination, see examples on pages 4-13 and 4-14.

by: GG 6/19/02
JB 6/20/02

12/18

Viscosity of Water and Liquid Petroleum Products[8, 12, 23]

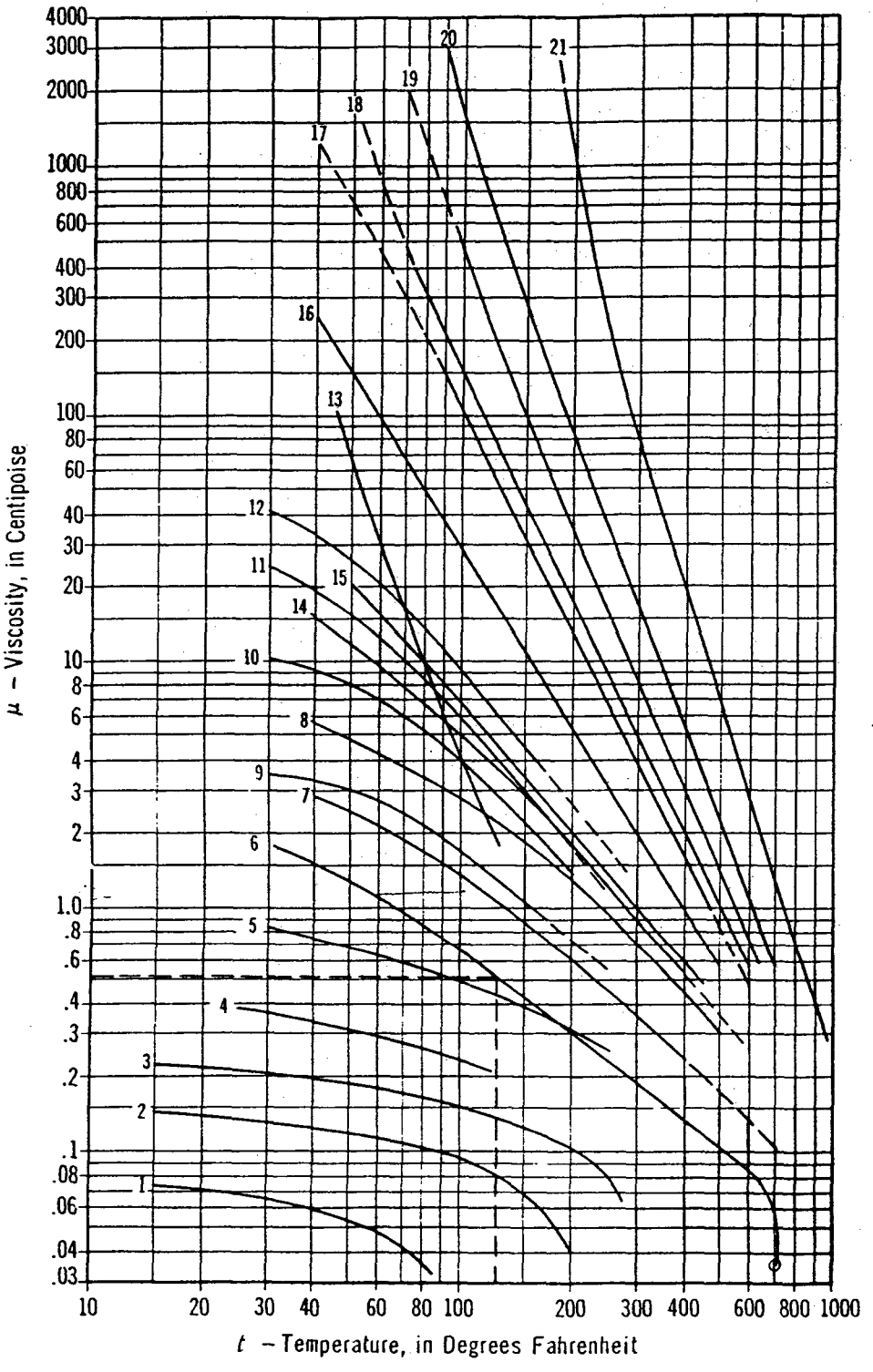

1. Ethane (C_2H_6)
2. Propane (C_3H_8)
3. Butane (C_4H_{10})
4. Natural Gasoline
5. Gasoline
6. Water
7. Kerosene
8. Distillate
9. 48 Deg. API Crude
10. 40 Deg. API Crude
11. 35.6 Deg. API Crude
12. 32.6 Deg. API Crude
13. Salt Creek Crude
14. Fuel 3 (Max.)
15. Fuel 5 (Min.)
16. SAE 10 Lube (100 V.I.)
17. SAE 30 Lube (100 V.I.)
18. Fuel 5 (Max.) or Fuel 6 (Min.)
19. SAE 70 Lube (100 V.I.)
20. Bunker C Fuel (Max.) and M.C. Residuum
21. Asphalt

Data extracted in part by permission from the Oil and Gas Journal.

Example: The viscosity of water at 125 F is 0.52 centipoise (Curve No. 6).

by: EG 6/12/02
JB 6/20/02

13/18

Physical Properties of Water

Temperature of Water t Degrees Fahrenheit	Saturation Pressure P' Pounds per Square Inch Absolute	Specific Volume $\overline{V}$ Cubic Feet Per Pound	Weight Density ρ Pounds per Cubic Foot	Weight Pounds Per Gallon
32	0.08859	0.016022	62.414	8.3436
40	0.12163	0.016019	62.426	8.3451
50	0.17796	0.016023	62.410	8.3430
60	0.25611	0.016033	62.371	8.3378
70	0.36292	0.016050	62.305	8.3290
80	0.50683	0.016072	62.220	8.3176
90	0.69813	0.016099	62.116	8.3037
100	0.94924	0.016130	61.996	8.2877
110	1.2750	0.016165	61.862	8.2698
120	1.6927	0.016204	61.7132	8.2498
130	2.2230	0.016247	61.550	8.2280
140	2.8892	0.016293	61.376	8.2048
150	3.7184	0.016343	61.188	8.1797
160	4.7414	0.016395	60.994	8.1537
170	5.9926	0.016451	60.787	8.1260
180	7.5110	0.016510	60.569	8.0969
190	9.340	0.016572	60.343	8.0667
200	11.526	0.016637	60.107	8.0351
210	14.123	0.016705	59.862	8.0024
212	14.696	0.016719	59.812	7.9957
220	17.186	0.016775	59.613	7.9690
240	24.968	0.016926	59.081	7.8979
260	35.427	0.017089	58.517	7.8226
280	49.200	0.017264	57.924	7.7433
300	67.005	0.01745	57.307	7.6608
350	134.604	0.01799	55.586	7.4308
400	247.259	0.01864	53.648	7.1717
450	422.55	0.01943	51.467	6.8801
500	680.86	0.02043	48.948	6.5433
550	1045.43	0.02176	45.956	6.1434
600	1543.2	0.02364	42.301	5.6548
650	2208.4	0.02674	37.397	4.9993
700	3094.3	0.03662	27.307	3.6505

Specific gravity of water at 60 F = 1.00

Weight per gallon is based on 7.48052 gallons per cubic foot.

All data on volume and pressure are abstracted from ASME Steam Tables (1967), with permission of publisher, The American Society of Mechanical Engineers, New York, N. Y.

by: GG 10/19/02
JB 6/20/02

14/18

Friction Factors for Clean Commercial Steel Pipe[18]

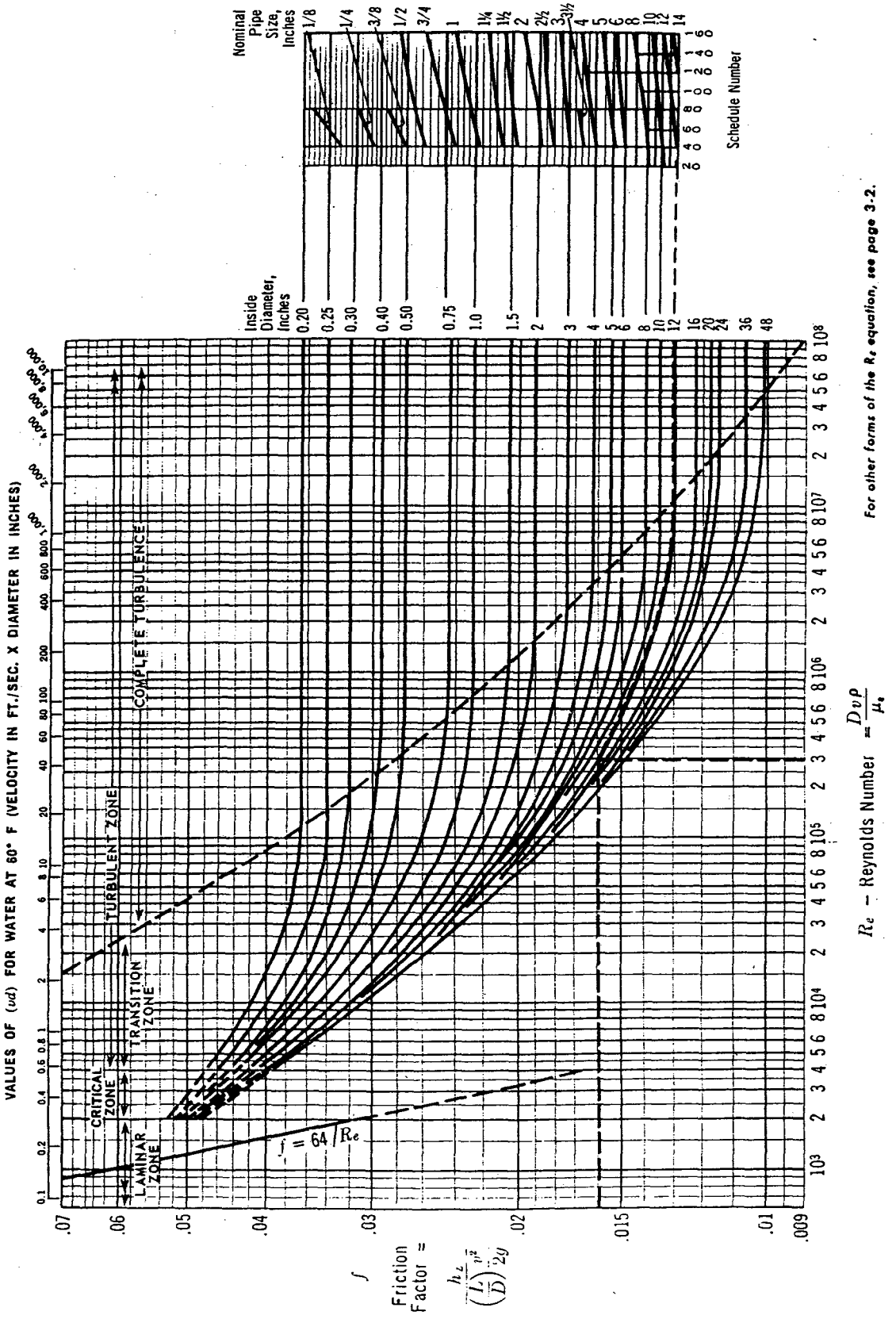

Problem: Determine the friction factor for 12-inch Schedule 40 pipe at a flow having a Reynolds number of 300,000.

Solution: The friction factor (f) equals 0.016.

bo: KB 6/19/02
JB 6/20/02

15/18

"K" FACTOR TABLE—SHEET 1 of 4

Representative Resistance Coefficients (K) for Valves and Fittings

("K" is based on use of schedule pipe as listed on page 2-10)

PIPE FRICTION DATA FOR CLEAN COMMERCIAL STEEL PIPE WITH FLOW IN ZONE OF COMPLETE TURBULENCE

Nominal Size	½"	¾"	1"	1¼"	1½"	2"	2½, 3"	4"	5"	6"	8-10"	12-16"	18-24"
Friction Factor (f_T)	.027	.025	.023	.022	.021	.019	.018	.017	.016	.015	.014	.013	.012

FORMULAS FOR CALCULATING "K" FACTORS* FOR VALVES AND FITTINGS WITH REDUCED PORT

(Ref: Pages 2-11 and 3-4)

- **Formula 1**

$$K_2 = \frac{0.8\left(\sin\frac{\theta}{2}\right)(1-\beta^2)}{\beta^4} = \frac{K_1}{\beta^4}$$

- **Formula 2**

$$K_2 = \frac{0.5\,(1-\beta^2)\sqrt{\sin\frac{\theta}{2}}}{\beta^4} = \frac{K_1}{\beta^4}$$

- **Formula 3**

$$K_2 = \frac{2.6\left(\sin\frac{\theta}{2}\right)(1-\beta^2)^2}{\beta^4} = \frac{K_1}{\beta^4}$$

- **Formula 4**

$$K_2 = \frac{(1-\beta^2)^2}{\beta^4} = \frac{K_1}{\beta^4}$$

- **Formula 5**

$$K_2 = \frac{K_1}{\beta^4} + \text{Formula 1} + \text{Formula 3}$$

$$K_2 = \frac{K_1 + \sin\frac{\theta}{2}[0.8\,(1-\beta^2) + 2.6\,(1-\beta^2)^2]}{\beta^4}$$

- **Formula 6**

$$K_2 = \frac{K_1}{\beta^4} + \text{Formula 2} + \text{Formula 4}$$

$$K_2 = \frac{K_1 + 0.5\sqrt{\sin\frac{\theta}{2}}\,(1-\beta^2) + (1-\beta^2)^2}{\beta^4}$$

- **Formula 7**

$$K_2 = \frac{K_1}{\beta^4} + \beta\,(\text{Formula 2} + \text{Formula 4}) \text{ when } \theta = 180°$$

$$K_2 = \frac{K_1 + \beta\left[0.5\,(1-\beta^2) + (1-\beta^2)^2\right]}{\beta^4}$$

$$\beta = \frac{d_1}{d_2}$$

$$\beta^2 = \left(\frac{d_1}{d_2}\right)^2 = \frac{a_1}{a_2}$$

Subscript 1 defines dimensions and coefficients with reference to the smaller diameter.
Subscript 2 refers to the larger diameter.

***Use "K" furnished by valve or fitting supplier when available.**

SUDDEN AND GRADUAL CONTRACTION

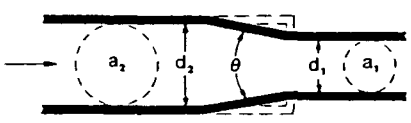

If: $\theta \leq 45°$ . . . . . K_2 = Formula 1
$45° < \theta \leq 180°$ . . . K_2 = Formula 2

SUDDEN AND GRADUAL ENLARGEMENT

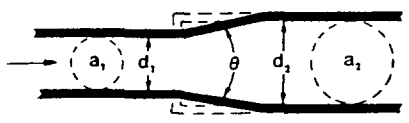

If: $\theta \leq 45°$ . . . . . K_2 = Formula 3
$45° < \theta \leq 180°$ . . . K_2 = Formula 4

by: EB 6/19/02
JB 6/20/02

16/18

"K" FACTOR TABLE—SHEET 2 of 4

Representative Resistance Coefficients (K) for Valves and Fittings

(for formulas and friction data, see page A-26)

("K" is based on use of schedule pipe as listed on page 2-10)

GATE VALVES
Wedge Disc, Double Disc, or Plug Type

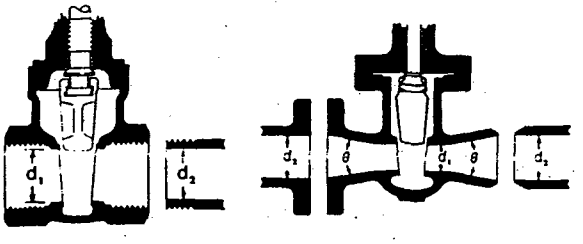

If: $\beta = 1$, $\theta = 0$ . . . . . $K_1 = 8 f_T$

$\beta < 1$ and $\theta \geq 45°$ . . . . . K_2 = Formula 5

$\beta < 1$ and $45° < \theta \leq 180°$ . . . K_2 = Formula 6

SWING CHECK VALVES

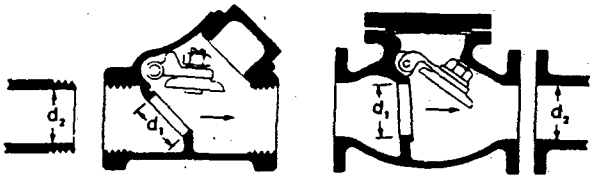

$K = 100 f_T$

Minimum pipe velocity (fps) for full disc lift $= 35 \sqrt{\bar{V}}$

$K = 50 f_T$

Minimum pipe velocity (fps) for full disc lift $= 60 \sqrt{\bar{V}}$ except U/L listed $= 100 \sqrt{\bar{V}}$

GLOBE AND ANGLE VALVES

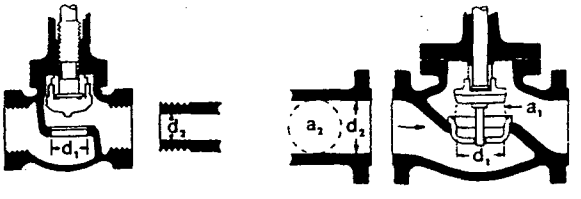

If: $\beta = 1 \ldots K_1 = 340 f_T$

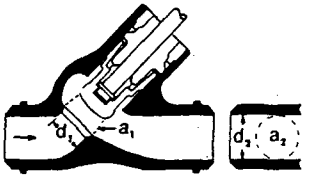

If: $\beta = 1 \ldots K_1 = 55 f_T$

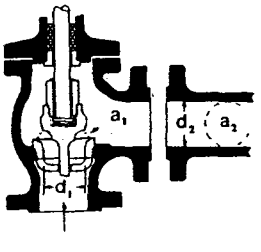

If: $\beta = 1 \ldots K_1 = 150 f_T$

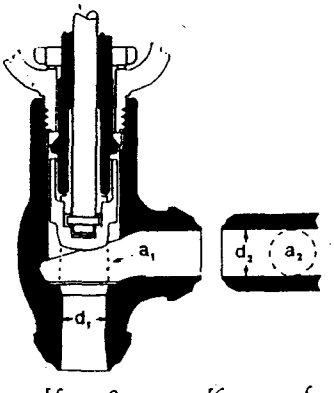

If: $\beta = 1 \ldots K_1 = 55 f_T$

All globe and angle valves, whether reduced seat or throttled,

If: $\beta < 1 \ldots K_2$ = Formula 7

LIFT CHECK VALVES

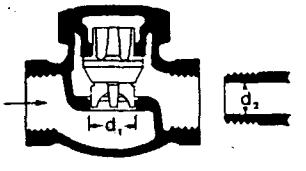

If: $\beta = 1 \ldots K_1 = 600 f_T$

$\beta < 1 \ldots K_2$ = Formula 7

Minimum pipe velocity (fps) for full disc lift $= 40 \beta^2 \sqrt{\bar{V}}$

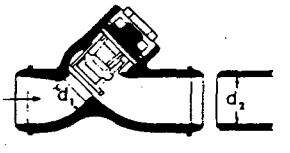

If: $\beta = 1 \ldots K_1 = 55 f_T$

$\beta < 1 \ldots K_2$ = Formula 7

Minimum pipe velocity (fps) for full disc lift $= 140 \beta^2 \sqrt{\bar{V}}$

TILTING DISC CHECK VALVES

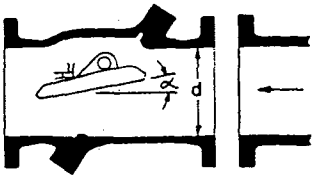

	$\alpha = 5°$	$\alpha = 15°$
Sizes 2 to 8" . . . K =	$40 f_T$	$120 f_T$
Sizes 10 to 14" . . . K =	$30 f_T$	$90 f_T$
Sizes 16 to 48" . . . K =	$20 f_T$	$60 f_T$
Minimum pipe velocity (fps) for full disc lift =	$80 \sqrt{\bar{V}}$	$30 \sqrt{\bar{V}}$

by: EG 6/19/02
JB 6/20/02

17/18

"K" FACTOR TABLE—SHEET 3 of 4

Representative Resistance Coefficients (K) for Valves and Fittings

(for formulas and friction data, see page A-26)

("K" is based on use of scheduled pipe as listed on page 2-10)

STOP-CHECK VALVES (Globe and Angle Types)

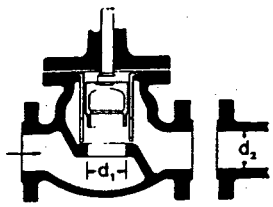

If:
$\beta = 1 \ldots K_1 = 400\, f_T$
$\beta < 1 \ldots K_2 =$ Formula 7

Minimum pipe velocity for full disc lift
$= 55\, \beta^2 \sqrt{V}$

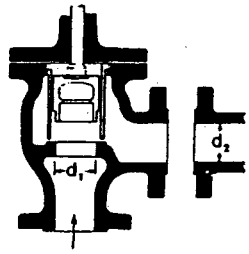

If:
$\beta = 1 \ldots K_1 = 200\, f_T$
$\beta < 1 \ldots K_2 =$ Formula 7

Minimum pipe velocity for full disc lift
$= 75\, \beta^2 \sqrt{V}$

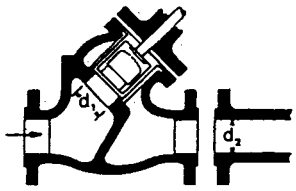

If:
$\beta = 1 \ldots K_1 = 300\, f_T$
$\beta < 1 \ldots K_2 =$ Formula 7

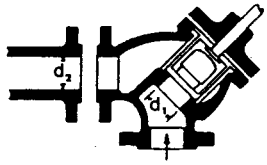

If:
$\beta = 1 \ldots K_1 = 350\, f_T$
$\beta < 1 \ldots K_2 =$ Formula 7

Minimum pipe velocity (fps) for full disc lift
$= 60\, \beta^2 \sqrt{V}$

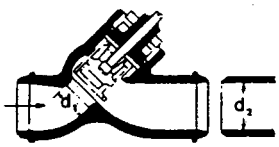

If:
$\beta = 1 \ldots K_1 = 55\, f_T$
$\beta < 1 \ldots K_2 =$ Formula 7

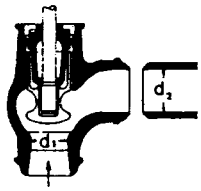

If:
$\beta = 1 \ldots K_1 = 55\, f_T$
$\beta < 1 \ldots K_2 =$ Formula 7

Minimum pipe velocity (fps) for full disc lift
$= 140\, \beta^2 \sqrt{V}$

FOOT VALVES WITH STRAINER

Poppet Disc

$K = 420 f_T$

Minimum pipe velocity (fps) for full disc lift
$= 15 \sqrt{V}$

Hinged Disc

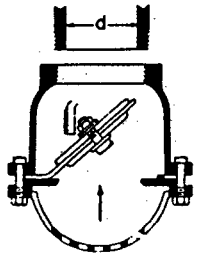

$K = 75 f_T$

Minimum pipe velocity (fps) for full disc lift
$= 35 \sqrt{V}$

BALL VALVES

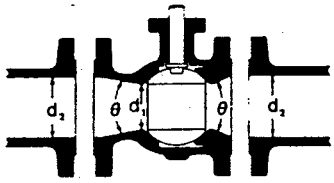

If: $\beta = 1,\ \theta = 0 \ldots\ldots\ldots\ldots K_1 = 3\, f_T$
$\beta < 1$ and $\theta \leq 45° \ldots\ldots\ldots K_2 =$ Formula 5
$\beta < 1$ and $45° < \theta \leq 180° \ldots K_2 =$ Formula 6

BUTTERFLY VALVES

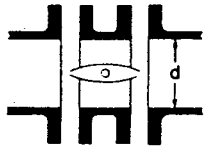

Sizes 2 to 8" . . . $K = 45\, f_T$
Sizes 10 to 14" . . . $K = 35\, f_T$
Sizes 16 to 24" . . . $K = 25\, f_T$

by: EG 6/19/02
JB 6/20/02

18/18

"K" FACTOR TABLE—SHEET 4 of 4

Representative Resistance Coefficients (K) for Valves and Fittings

(for formulas and friction data, see page A-26)

("K" is based on use of schedule pipe as listed on page 2-10)

PLUG VALVES AND COCKS

Straight-Way

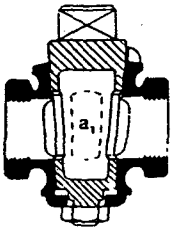

If: $\beta = 1$, $K_1 = 18\, f_T$

3-Way

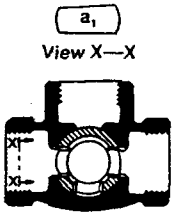

If: $\beta = 1$, $K_1 = 30\, f_T$

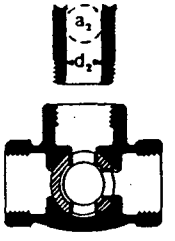

If: $\beta = 1$, $K_1 = 90\, f_T$

If: $\beta < 1 \ldots K_2 =$ Formula 6

MITRE BENDS

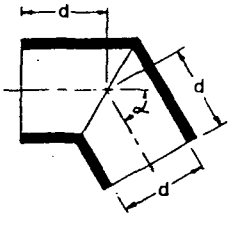

α	K
0°	2 f_T
15°	4 f_T
30°	8 f_T
45°	15 f_T
60°	25 f_T
75°	40 f_T
90°	60 f_T

90° PIPE BENDS AND FLANGED OR BUTT-WELDING 90° ELBOWS

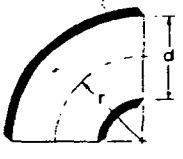

r/d	K	r/d	K
1	20 f_T	8	24 f_T
1.5	14 f_T	10	30 f_T
2	12 f_T	12	34 f_T
3	12 f_T	14	38 f_T
4	14 f_T	16	42 f_T
6	17 f_T	20	50 f_T

The resistance coefficient, K_B, for pipe bends other than 90° may be determined as follows:

$$K_B = (n - 1)\left(0.25\,\pi\, f_T \frac{r}{d} + 0.5\,K\right) + K$$

n = number of 90° bends
K = resistance coefficient for one 90° bend (per table)

CLOSE PATTERN RETURN BENDS

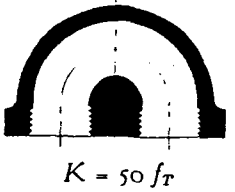

$K = 50\, f_T$

STANDARD ELBOWS

90°

$K = 30\, f_T$

45°

$K = 16\, f_T$

STANDARD TEES

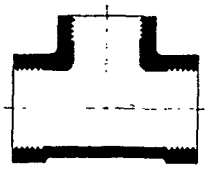

Flow thru run . . . . . $K = 20\, f_T$
Flow thru branch . . . . $K = 60\, f_T$

PIPE ENTRANCE

Inward Projecting

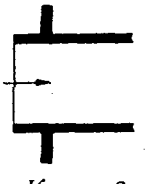

$K = 0.78$

r/d	K
0.00*	0.5
0.02	0.28
0.04	0.24
0.06	0.15
0.10	0.09
0.15 & up	0.04

*Sharp-edged

Flush

For K, see table

PIPE EXIT

Projecting

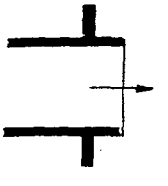

$K = 1.0$

Sharp-Edged

$K = 1.0$

Rounded

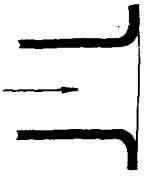

$K = 1.0$

CALCULATION COVER SHEET

PROJECT New Bedford Harbor Superfund Site OU#1

SUBJECT Inclined Plate Clarifier System (CL-101) Sizing

CLIENT U.S. Army Corps of Engineers – New England District (USACE – NED)

CALCULATION NO. P-08 PROJECT NO. 5197.1720.3392

NO OF SHEETS _____ DESIGN LEVEL _____

CALCULATION BY OTHERS _____ YES X NO

PREPARER E. Griffin

REVIEWED BY _____ DATE 10-30-01

ASSUMPTIONS THAT REQUIRE CONFIRMATION _____ YES X NO

ASSUMPTIONS CONFIRMED BY _____ DATE _____

PRINT NAME, DATE AND INITIAL

Rev No	Affected Sheets	Prepared by Date	Checked by Date	Verified by Date

FOSTER WHEELER ENVIRONMENTAL CORPORATION

BY EG DATE 7/30/01 SHEET 2 OF 16

CHKD. BY JB DATE 8/1/01 OFS NO. DEPT. NO.

CLIENT USACE

PROJECT New Bedford Harbor Superfund Site

SUBJECT Inclined Plate Clarifier

GIVEN:
- Q_{MAX} = 2000 gpm
- Max. loading rate = 1 gpm/ft²

FIND: size of clarifier

SOLUTION:

loading rate = Q/A or A = Q/loading rate

$$= \frac{2000 \text{ gpm}}{1 \text{ gpm/ft}^2}$$

$$= \boxed{2000 \text{ ft}^2} = \text{settling area (80\% of available area)}$$

Available area = 1.2 (settling area) = 1.2 (2000 ft²) = $\boxed{2400 \text{ ft}^2}$

⇒ LGS Unit Model Number 2000/55 (settling area/plate ¢)
⇒ LGST Unit Model Number 2480/55 (settling area/plate ¢)

(refer to Lamella Gravity Settlers, Parkson Corporation)

GIVEN: 2000/55 LGS Unit
FIND: loading rate
SOLUTION: loading rate = Q/A

$$= \frac{2000 \text{ gpm}}{2000 \text{ ft}^2} = \boxed{1 \text{ gpm/ft}^2}$$

GIVEN: 2480/55 LGST Unit
FIND: loading rate
SOLUTION: loading rate = Q/A

$$= \frac{2000 \text{ gpm}}{2480 \text{ ft}^2} = \boxed{0.8 \text{ gpm/ft}^2}$$

by EO 7/30/01
CK By: JB 8/1/01

3/16

LAMELLA® GRAVITY SETTLER

THEORY AND DESIGN

The Lamella® Gravity Settler is an inclined plate, shallow depth sedimentation device. By comparison, it offers a number of advantages which overcome the limitations of other products designed for the same performance applications, advantages which yield savings in space requirements, capital and operating costs.

It performs the same function as a conventional clarifier or settling basin, but it occupies only a fraction of the space. In outward appearance it resembles a simple plate or tube settler, but due to some unique design features, it can be operated at a much higher loading rate and yield better performance.

In order to better understand the design advantages inherent in the Lamella Gravity Settler, it is best to begin by describing some basic principles of sedimentation theory.

In certain suspensions, particles exhibit *"free settling."* This phenomenon occurs when the concentration of particles is low enough that the individual particles or flocs settle independently of one another and follow Stokes' Law. At higher concentrations, the settling particles interfere with each other, and *"hindered settling"* is encountered. It is characterized by a clearly defined interface between the suspension and the clarified liquid; this creates a settling operation of greater complexity. The Lamella Gravity Settler can be used for both free settling and hindered settling, but in the interest of simplicity, it is easier to describe the theory of the former.

The basic equations for sizing settling basins were formulated over seventy years ago. Consider for the moment an ideal settling basic (Figure 1). The suspension enters at one end of the basin, flows uniformly along its length at velocity V_L, and exits at the other end. The particles settle towards the bottom at velocity V_S. The trajectory of the particles is indicated by the vector V_P. If this trajectory takes the particles to the bottom of the basin before they reach the far end, it is assumed that they are removed from the liquid. Therefore, a particle starting at the top must settle through the distance H at velocity V_S in the same time (or less) that the liquid is in the basin. Thus,

$$\frac{H\ (ft)}{V_S\ (ft/min)} \leqslant \frac{L \times W \times H\ (ft^3)}{Q\ (ft^3/min)}$$

Simplifying,

$$\frac{Q}{L \times W} = \frac{Q(ft^3/min)}{A\ (ft^2)} \leqslant V_S\ (ft/min)$$

where A is the settling area of the basin and Q/A is known as the *"overflow rate"* or *"surface loading rate"* (usually expressed in gpm/ft² or gpd/ft²). From this relationship it can be seen that all particles are removed which have a settling rate equal to or greater than the overflow rate, and that the height (or detention time) of the basin is not one of the main parameters affecting the separation efficiency. This is the theoretical keystone of the Lamella Gravity Settler's achievement in optimizing efficiency within greatly reduced spacial requirements.

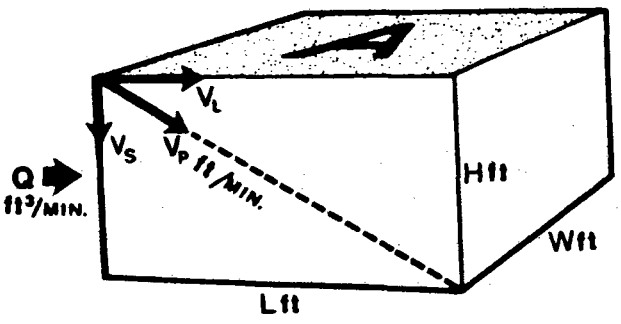

FIGURE 1.

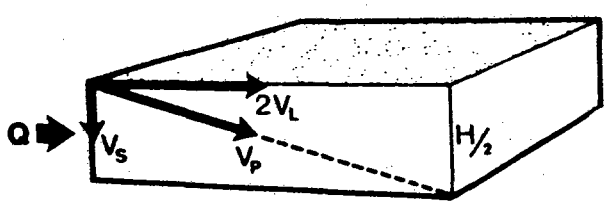

FIGURE 2.

The fact that this is true can be illustrated another way. Compare Figures 1 and 2; the only difference is that the second basin is half the height of the first. As a result the detention time is only half as much and the suspen-

2727 N.W. 62nd Street
P.O. Box 408399
Fort Lauderdale, Florida 33340-8399
Telephone: 305 974-6610
FAX: 305 974-6182

An Axel Johnson Inc. Company

by EG 7/30/01
CHECKED BY: JJB 8/1/01

sion moves through the basin at twice the velocity V_L. The trajectory of the particles has only half the slope, but since the basin is only half as deep, the particles are still removed.

If the height of the basin is reduced to a few inches and a number of such units are stacked on top of each other, the result is a primitive shallow depth sedimentation device. Figure 3 shows a unit containing ten parallel compartments. Theoretically it can handle ten times the flow rate as could the same basin without any plates. The liquid detention time is one-tenth as long. However, the same separation efficiency is achieved since the overflow rate is still the same (10Q/10A = Q/A). Note that the settling area now includes the area of all the plates.

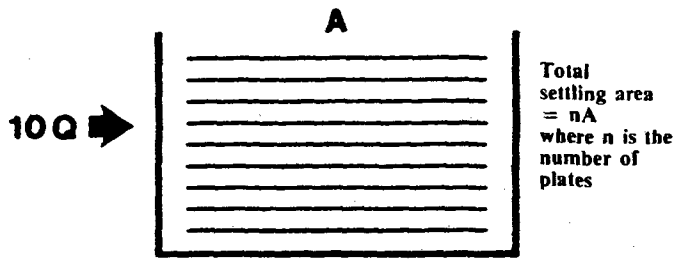

FIGURE 3.

In theory, fine. In practice, however, the shallow depth sedimentation device suggested by Figure 3 is impractical since it is difficult to remove sludge from the plates. Either the space between the plates must be large enough to accommodate mechanical scrapers or the unit must be shut down periodically and back-flushed. While both systems are used occasionally for special applications, in general they are impractical.

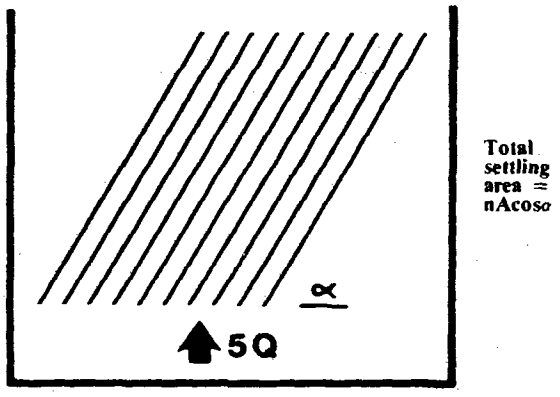

FIGURE 4.

A solution to the problem of removing sludge build-up from the otherwise efficient horizontal plate stack is to incline the plates at an angle so the sludge will be self-draining. Figure 4 shows an arrangement containing ten plates set at an angle of 60° above the horizontal. The total plate area is derived as above, but the plate area must be multiplied by the cosine of the angle to correctly determine the effective settling area. (Thus only the projected area of each plate on a horizontal plane is "counted.") In this example, the total settling area is 10A cos. 60°=5A and the capacity of the unit is 5Q.

The design shown in Figure 4 is exemplified by the present-day tube settler. Tubes instead of plates are used, but the basic principle is the same. The tubes are generally about two inches square in cross-section and two feet long. This design, however, suffers from two very serious limitations. First, there is no means provided to ensure that the flow is uniformly distributed throughout the settler. As a result, parts of the settler may be overloaded while other parts may be underloaded. Secondly, the sludge which collects in the tubes must settle through the incoming feed in order to reach the bottom of the basin and be removed. Consequently, the solids, particularly in hindered settling operations, may be reentrained by the feed. Tube settlers and similar devices have no provision for hindered settling. Due to these limitations, such a settler must be operated at a loading rate of only 25-50% of its theoretical "overflow rate." (For more detailed background on this specific subject, please refer to (2) and (3) below.)

The Lamella Gravity Settler design successfully overcomes these limitations. Uniform flow distribution is attained by designing for a small pressure drop (2-4 inches of water) at the discharge of each plate. This pressure drop controls flow by creating the same hydraulic conditions above each plate so flow will be uniformly distributed. Sludge reentrainment is avoided by the fact that settling and thickening occur below the influent

(2) "Design of High-Rate Settlers," Kuan M. Yao, Journal of the Environmental Engineering Division, October 1973.
(3) "Design of High-Rate Settlers," Discussion by A. George Gebauer, Journal of the Environmental Engineering Division, October 1974.

of each plate and by segregating the feed, effluent and sludge. In this way, the Lamella Gravity Settler provides for hindered settling applications.

These features are shown schematically in Figure 5. The feed enters at the sides of the plates and clear effluent discharges at the top. The solids slide down the plates and drop into the quiescent sludge hopper. The three streams do not interfere with one another. The effluent passes from each plate through a throttling hole located at the bottom of the effluent flume. The separate holes for each plate ensure uniform pressure drop over each plate and thus equal flow through the unit.

The throttling holes range from about 1/2 to 1 inch in diameter, large enough to preclude plugging. Also, since the effluent is throttled as opposed to the influent, most of the solids have been removed at this point. In any event, influent throttling would be unacceptable whenever flocculation is necessary, since throttling would destroy the flocs.

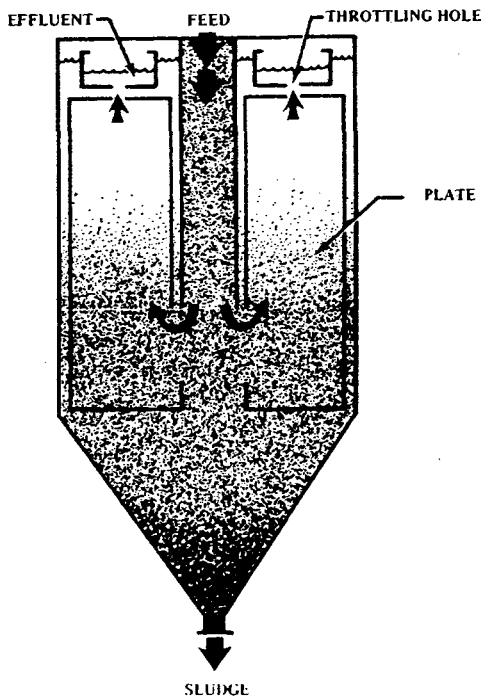

FIGURE 5. LAMELLA GRAVITY SETTLER (END-VIEW)

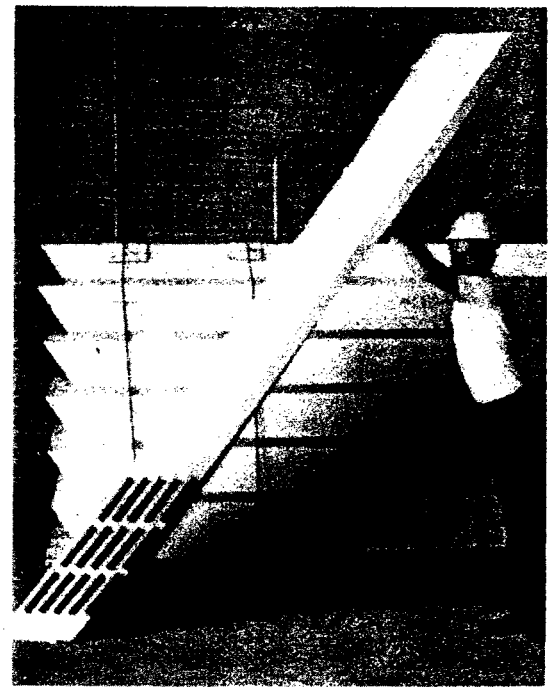

FIGURE 6. TYPICAL PLATES

A typical Lamella Gravity Settler plate (Figure 6) is usually two feet wide by ten feet long, is spaced two inches from adjacent plates, and is inclined at an angle of 45 or 55 degrees. In some units, double plates are used. They are four feet wide by ten feet long and are fed from both sides. The ten foot plate length is divided into two sections, one above and one below the feed point. The section above is called *"clarification area"* and is actually the area used in sizing the equipment based on the overflow rate. The section below the feed point is called *"thickening area"* and is used to prethicken the sludge before it enters the hopper. A common split for free settling applications is 80% clarification area (A_C), 20% thickening area (A_T).

The Lamella Gravity Settler is generally designed to operate in the orderly streamline or laminar flow regime between the plates. This effectively limits the overflow rate to about 1.2 gpm/ft^2, although for some solids which settle very rapidly, this limit can be exceeded somewhat.

The plate spacing is a critical variable. It must be large enough to prevent scouring of settled solids by the upward flowing liquid, to transport the solids down to the hopper, and to avoid plugging of these solids. Two inches is generally quite safe. For some applications having (a) slow settling particles (and therefore requiring a low overflow rate) and (b) a low sludge volume, a plate spacing down to one inch can be used.

In some applications, to facilitate sludge consolidation, the Lamella Gravity Settler is fitted with a vibrator in the sludge hopper (except in very large installations which employ a mechanical scraper under packs of plates). Vibrations are transmitted to a nest of elements in the hopper from an external vibrator motor. The two are connected by a shaft which passes through a flexible rubber seal at the tank wall. The purpose of the vibrator is to vibrate the sludge, not the tank. The vibrations, which are low frequency (60hz) and low amplitude (about 0.2 mm), promote thickening and compression of the sludge and produce a lower apparent viscosity (especially for thixotropic sludges) which facilitates sludge removal from the hopper.

By EB 7/30/01
CHECKED: JTB 8/1/01

6/16

A flash mixer and/or flocculator may be required ahead of the Lamella Gravity Settler (as with all settlers) to mix in polyelectrolytes which promote floc growth and enhance the clarification process. Care must be taken to transport the flocculated feed to the LGS to avoid floc break up. Generally the velocity at this point is held under 1.0 fps.

The Lamella Gravity Settler is a simple unit to operate. The only item requiring operator attention is the sludge withdrawal rate. This is usually controlled by a variable speed, positive displacement pump which is manually set (once or twice a shift is usually sufficient) or automatically set by a detector which monitors either the sludge level in the hopper or the consistency of the underflow.

The Lamella Gravity Settler may be constructed of various materials. Wetted surfaces are usually mild steel or 316 stainless. For some applications, PVC or fiberglass reinforced plastic plates are used with rubber-lined mild steel tanks.

The Lamella Gravity Settler is sized by laboratory settling tests to determine the particle settling velocity V_S, (to set the overflow rate and effluent quality), the sludge volume (to set the underflow solids concentration), and what pretreatment is required (polyelectrolyte addition, flash mixing, flocculation, etc.). Laboratory results may be confirmed by pilot testing for new applications.

A properly designed shallow depth sedimentation device such as the Lamella Gravity Settler offers a number of advantages compared with a conventional clarifier or settling basin. The Lamella Gravity Settler:

1. **Occupies about one-tenth the floor space or land area**
2. **Costs less on a total installed basis**
3. **Is factory preassembled, resulting in shorter deliveries and minimal field erection work**
4. **Is simple to start up and shut down**
5. **May be installed indoors or covered at much less cost**
6. **Has a much lower evaporation and/or heat loss**
7. **Costs less to insulate**
8. **May be moved easily**
9. **Has far fewer moving parts**
10. **Is not affected by wind or thermal currents**
11. **Weighs less, and**
12. **Contains a lower inventory (important if liquid or solid is valuable)**

7116

PARKSON CORPORATION

By EG 7/30/01
CK BY: JJB 8/8/01

Fax #: (617) 457-8498

TO: Jim Brinkman
Foster Wheeler Environmental Corporation

FROM: Philip Streat

DATE: April 4, 2000

SUBJECT: Laboratory Test Summary for New Bedford Harbor Water Treatment System for the Lamella® Gravity Settler

COPIES: PPS, MAG, BJH/DDR, MGS/File: Wescor budget
Wescor Associates

Enclosed you will find the laboratory summary for the sample recently submitted.

The sample received contained 159 ppm TSS at a pH of 7.52.

Best results were achieved with the addition of 100 ppm of aluminum sulfate followed by 30 ppm of sodium hydroxide for pH adjustment. This was followed by addition of 2.0 ppm of an anionic polymer and one minute of flocculation. At a loading rate of 0.7 gpm/sq.ft. an effluent containing less than 20 mg/l TSS was produced.

Actual test results were 8 ppm TSS with 100 ppm of alum, 9 ppm with 75 ppm of alum and 18 ppm with 50 ppm of alum.

The recommended equipment for a flow rate of 1400 gpm is one model LGS 2500/55 with a size "F" flashmixer/flocculator. A somewhat higher sludge density could be achieved with one model LGST 2480/55 which has a thickening tank.

Drawings of these units are attached. Please note that the "F" size flashmixer/flocculator is larger than shown. The flashmixer is 3' x 3' and the flocculator is 7' x 7'.

Please contact me if you have any questions concerning the test work.

AN EQUAL OPPORTUNITY EMPLOYER

2727 N.W. 62ND STREET
FORT LAUDERDALE, FL 33309-1771

MAILING ADDRESS
P.O. BOX 408399
FORT LAUDERDALE, FL 33340-8399

TELEPHONE
954 974-6610

FAX
954 974-6182

AN AXEL JOHNSON INC.
COMPANY

PARKSON CORPORATION

By EG 7/30/01
CKBY: JB 8/1/01

LAMELLA® GRAVITY SETTLER

Date Tested: 03/17/2000 Customer Sample Number: 10528

LABORATORY SETTLING TEST SUMMARY
for the
LAMELLA GRAVITY SETTLER/THICKENER (LGST)

For: Foster Wheeler Envir., Boston, Massachusetts

Application: DREDGING WASTE
THE NEW BRADFORD HARBOR WT SYS

FEED AS RECEIVED:
Suspended Solids: 159.00 PPM pH: 7.52

FEED PRETREATMENT:

Chemicals Used:	ppm
ALUMINUM SULFATE	100
SODIUM HYDROXIDE	30

New Suspended Solids Level: 196.00 ppm
New pH: 7.71
Temperature: Ambient

FLOCCULATING AIDS:

Manufacturer	Polymer	Dosage ppm	Flash sec	Flocc. min
CYTEC	SUPERFLOC A-1820	2.00	10	1

OUR RECOMMENDATIONS:

Based on a maximum feed rate of 1400 GPM, we recommend the use of: 1 Model 2500/55 LGS / 1 Model 2480/55 LGST.
Each unit has 2000 sq.ft. (LGS) / 1984 sq.ft. (LGST) of clarification area and 500 sq.ft. (LGS) / 496 sq.ft. (LGST) of thickening area. At the maximum feed rate, the surface loading rate is 0.70 GPM/sq.ft. (LGS)/ 0.70 GPM/sq.ft. (LGST). At this loading rate, the unit will produce an effluent containing less than 30 ppm suspended solids and an underflow containing at least 1.5 - 2%(LGS)/2 TO 3 %(LGST) suspended solids, if attainable in static settling tests.

An Axel Johnson Inc. Company

2727 NW 62 Street
P.O. Box 408399
Fort Lauderdale FL 33340-8399
954 974-6610
FAX: 954 974-6182

LS

9/16

By EG 7/30/01
CK BY JJB 8/1/01

Date Tested: 03/17/2000

Customer Sample Number: 10528
Page No: 2

COMMENTS:

The sample received for testing contained 159 ppm total suspended solids at a pH of 7.52. Bench top flocculation tests indicated that an anionic emulsion polymer worked well in combination with aluminum sulfate plus sodium hydroxide for pH adjustment. Good effluent clarity was obtained with 100 ppm of aluminum sulfate plus, 30 ppm of sodium hydroxide and 2 ppm of polymer. Sludge recycle improved the effluent but was not necessary in order to obtain the desired results.

REPORTED BY: Barbara J. Hill, Laboratory Manager

REPORT DATE: 03/30/2000

NOTES:
1. MATERIALS OF CONSTRUCTION
   LAMELLA PLATES: SEE SPECS.
   LAMELLA TANK: 1/4 PLATE A-36 C.S.
   SLUDGE TANK: 3/8 WALL AND 1/2 THK. BOTTOM PLATE A-36 C.S.
   FLOC/MIX TANK: 1/4 PL. A-36 C.S.
2. SEE PAINT SPECIFICATIONS FOR PREPARATION AND COATINGS.
3. ALL BOLT HOLES AT FLANGED CONNECTIONS STRADDLE NORMAL CENTERLINES.
4. SLUDGE TANK DRIVE STALLED TORQUE RATING-833 FT. LBS.
5. USE SPREADER BARS OF ADEQUATE WIDTH AND CAPACITY WHEN LIFTING TANKS.
6. CUSTOMER TO PROVIDE ALLOWANCE FOR A MINIMUM OF 1 INCH OF GROUT BELOW ALL BASE SURFACES.

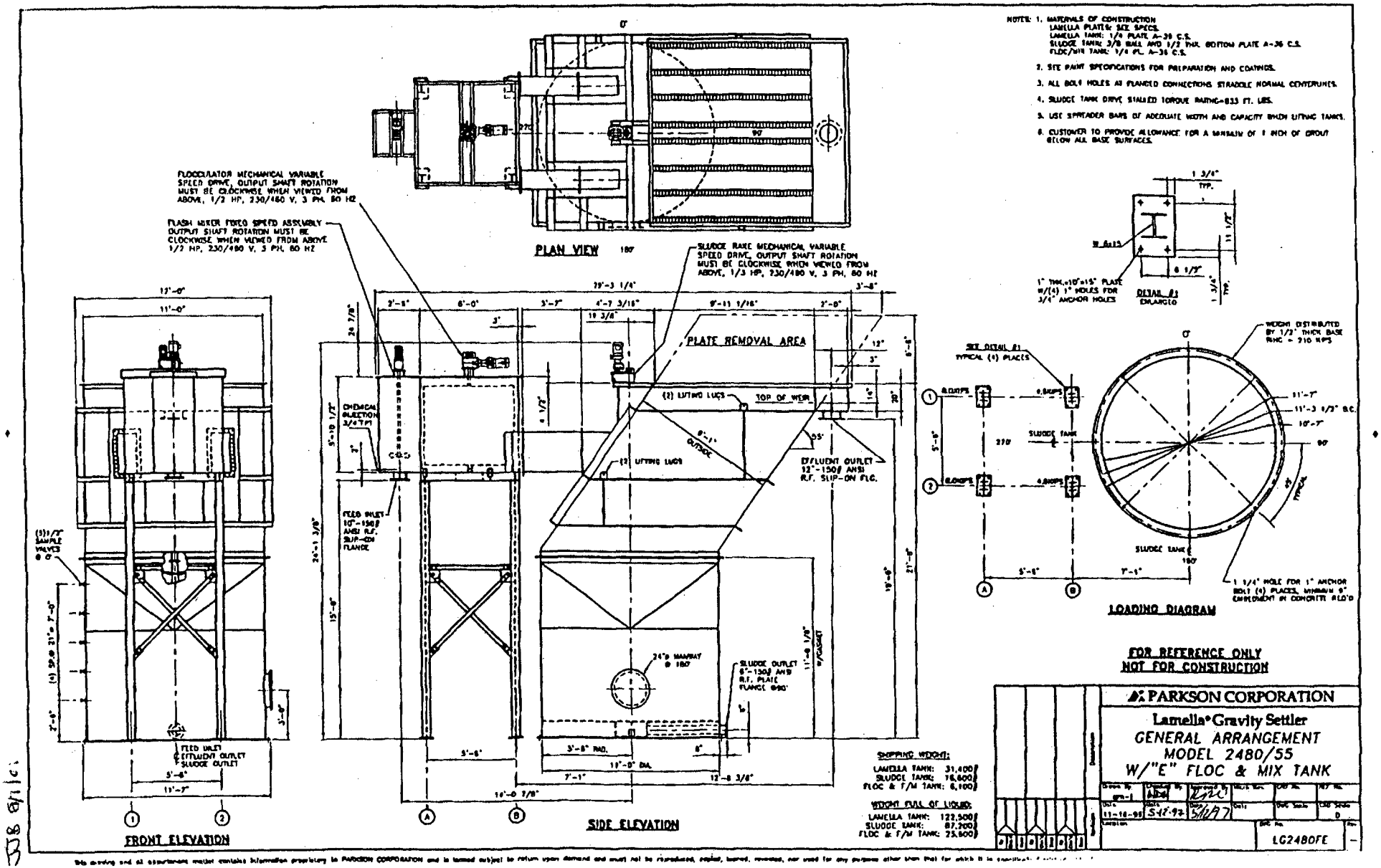

SHIPPING WEIGHT:
LAMELLA TANK: 31,400#
SLUDGE TANK: 16,600#
FLOC & F/M TANK: 6,100#

WEIGHT FULL OF LIQUID:
LAMELLA TANK: 122,500#
SLUDGE TANK: 87,200#
FLOC & F/M TANK: 75,600#

FOR REFERENCE ONLY
NOT FOR CONSTRUCTION

PARKSON CORPORATION
Lamella® Gravity Settler
GENERAL ARRANGEMENT
MODEL 2480/55
W/"E" FLOC & MIX TANK

Drawn By	Checked By	Approved By	Work Dwg.	Cust. No.	Ref. No.
gm-1					
Date 11-16-99	Date 5-17-99	Date 5/16/99	Date	Cust. Scale	Cust. Scale D

Location
Doc. No. LG2480FE
Rev. –

This drawing and all attachments model contains information proprietary to PARKSON CORPORATION and is loaned subject to return upon demand and must not be reproduced, copied, loaned, revealed, nor used for any purpose other than that for which it is specifically furnished.

11110

by EG 7/30/00
CK BY: JDB 8/1/01

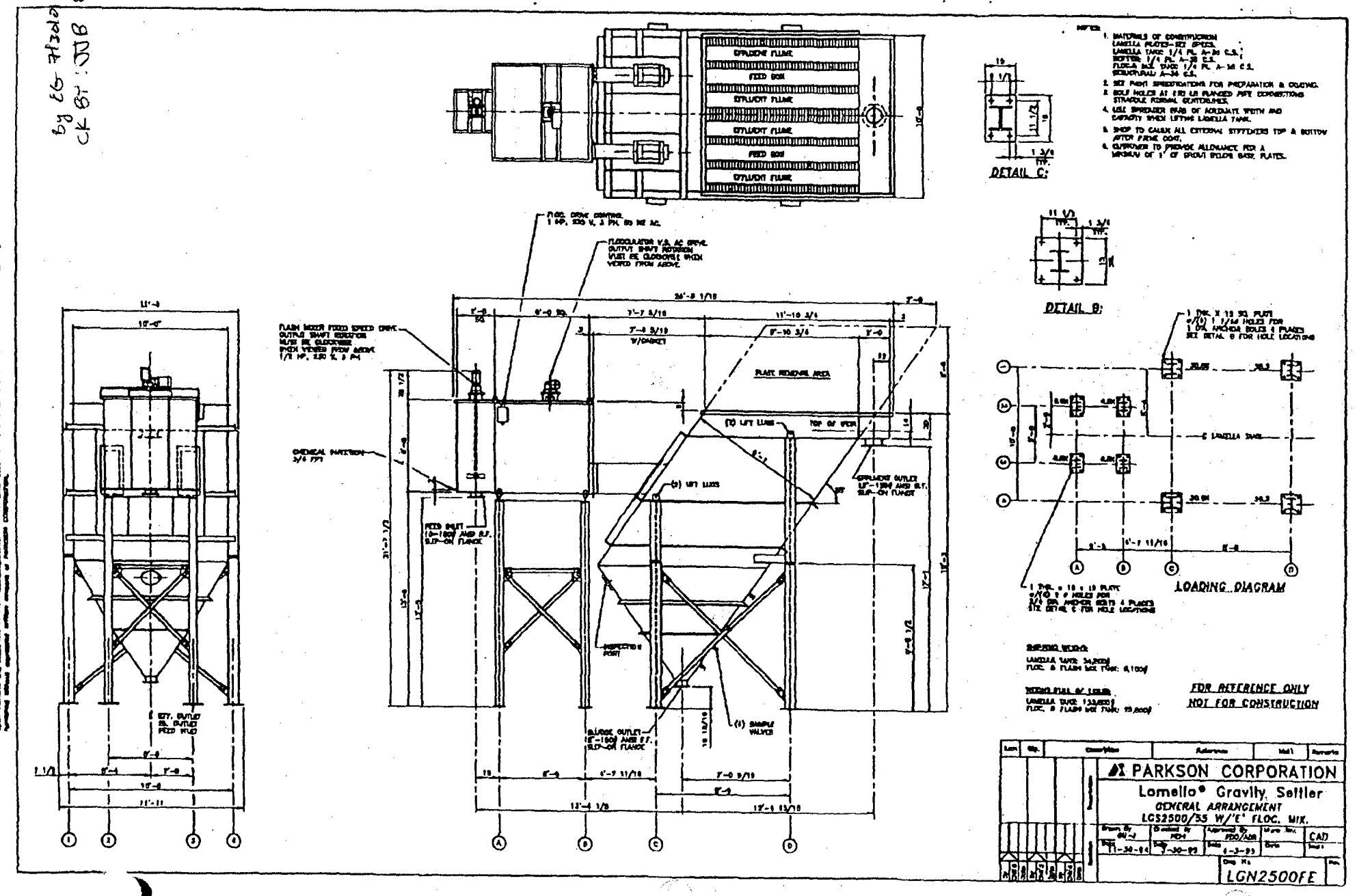

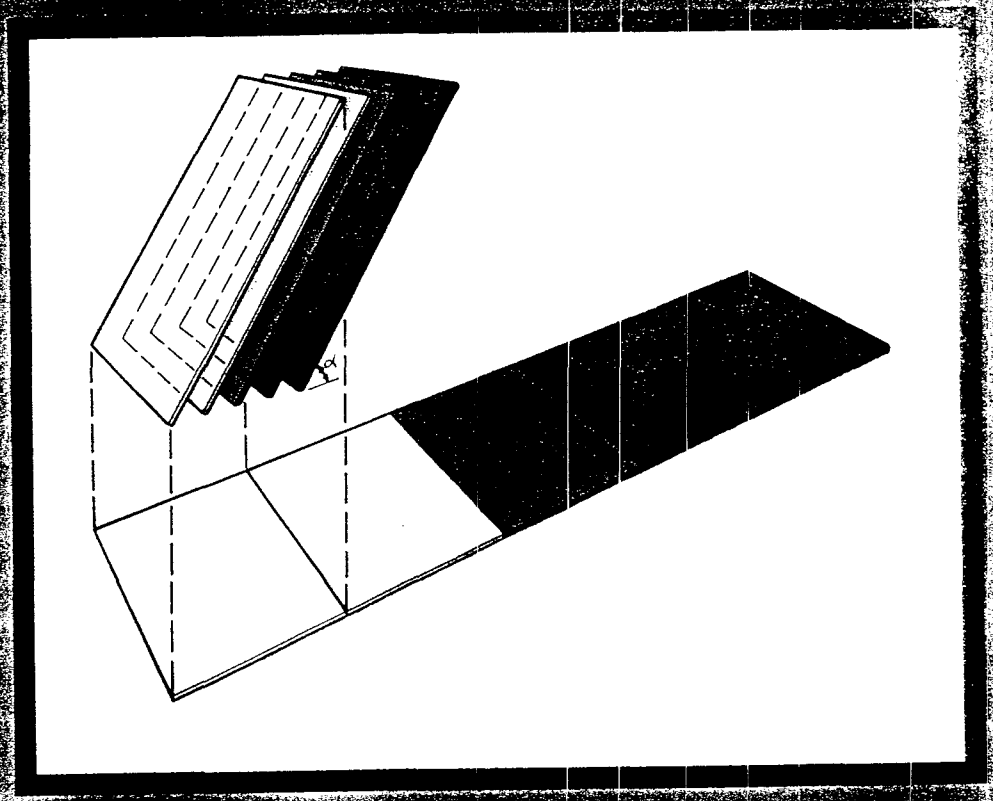

Lamella® Gravity Settler/ Thickener

PARKSON CORPORATION

Lamella® Gravity Settler

13116

Benefits

Reduces Space Requirements. Compact design reduces the land area needed by up to 90%. The reduced volume of the Lamella Gravity Settler minimizes short-circuiting and eliminates problems caused by wind, freezing, and floating contaminants.

Lower Maintenance and Virtually No Wear. The Lamella Gravity Settler has far fewer parts to wear, replace, or adjust than conventional clarifiers.

Reduces Total Installed Costs. Field erection costs are nearly eliminated as Lamella Gravity Settlers arrive ready to install at the site.

Unique, Patented Flow Distribution incorporated in the Lamella Gravity Settler design ensures maximum, balanced utilization of the plate area. Poor flow distribution and subsequent short-circuiting are typical of tube and other plate settlers.

Principle

The depth of a gravity settler has little bearing on its settling capacity. The most significant aspect of a gravity settler's design is its available settling area.

The effective gravity settling area of the inclined plate design equals each plate's area projected on a horizontal surface. Up to ten square feet of settling area become available for each square foot of land (or floor space) occupied by the unit.

Loading rates normally used for designing conventional settlers can, in general, be applied directly to the sizing of Lamella Gravity Settlers by substituting projected area for surface settling area in a conventional clarifier.

This distinct advantage, when combined with the Lamella Gravity Settler's unique flow distribution and simplified sludge removal technique, insures optimum performance.

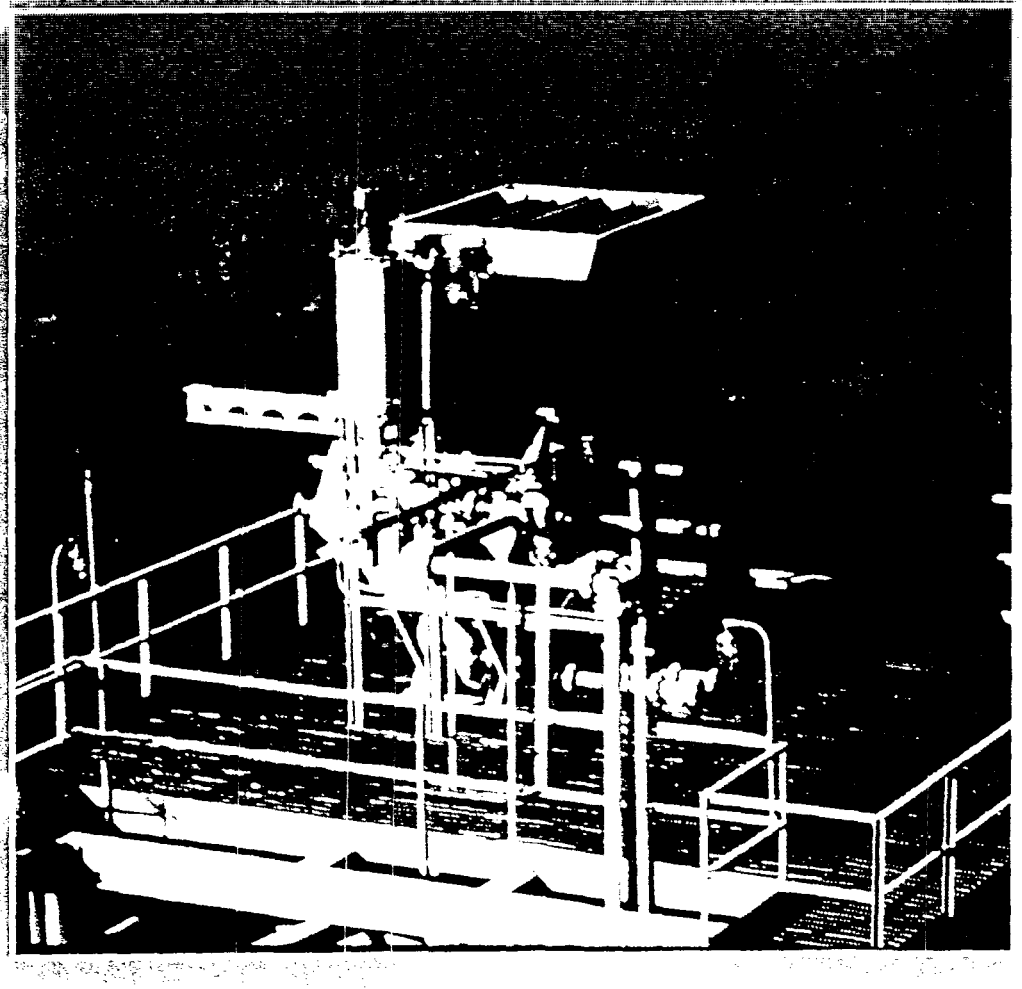

A Lamella Gravity Settler installed on top of a conventional clarifier of the same capacity.

Operation

By EG 7/30/01
CK BY: JJB 8/1/01

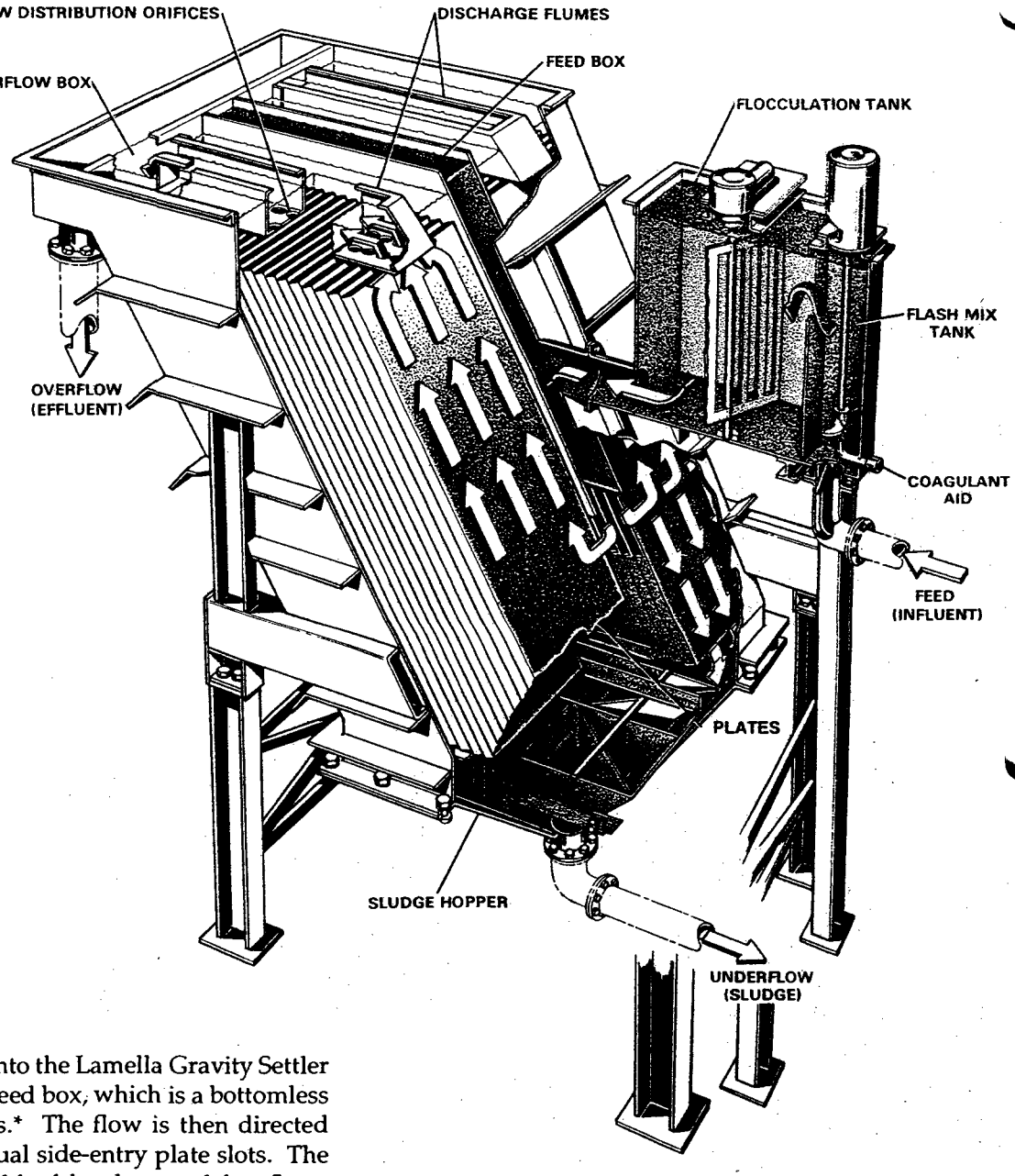

The feed stream is introduced into the Lamella Gravity Settler by means of a feed duct to the feed box, which is a bottomless channel between plate sections.* The flow is then directed downward toward the individual side-entry plate slots. The feed is distributed across the width of the plates and then flows upward under laminar flow conditions. The solids settle on the plates while the supernatant exits from the plates through orifice holes.

These holes are placed immediately above each plate and are sized to induce a calculated pressure drop to ensure that the feed is hydraulically distributed equally among the plates. The solids, meanwhile, slide down the plates into the sludge hopper. Further thickening of the sludge is achieved in the hopper due compression in the quiescent zone made possible by feeding e plates from the side rather than from the bottom.

Design Criteria

Total effective settling area is based on the projected area of each plate. The plates are proportioned to clarification and thickening area by adjusting the plate feed point. This ratio of clarification-to-thickening area is determined from prior laboratory settling tests on representative feed samples or, in cases where samples are not available, from experience with similar applications. Plate spacing is 2".

*** In applications where coagulants and/or flocculating aids are used, flash mix and/or flocculation tanks can be supplied. They are mounted adjacent to the feed duct to avoid the possibility of floc breakup.**

15116

Packaged Units

By EG 7/20/01
CK BY: JJB 8/1/01

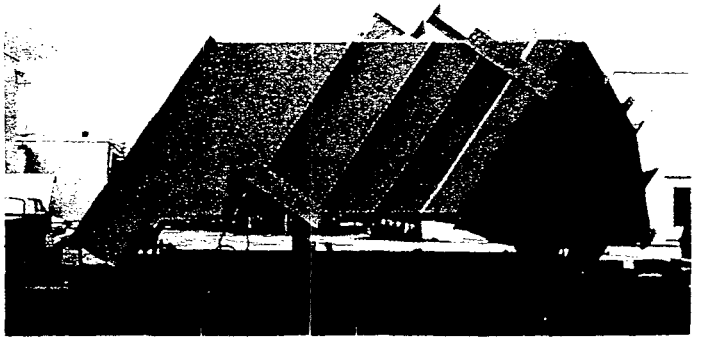

Typical Applications:

- Metal finishing wastewater
- CPI process, and wastewater
- Surface water clarification
- Power plant ash sluice water
- Cooling tower blowdown settling
- Power plant low volume wastewater
- Phosphate removal for municipal wastewater
- Paper fiber recovery

Packaged LGS Units

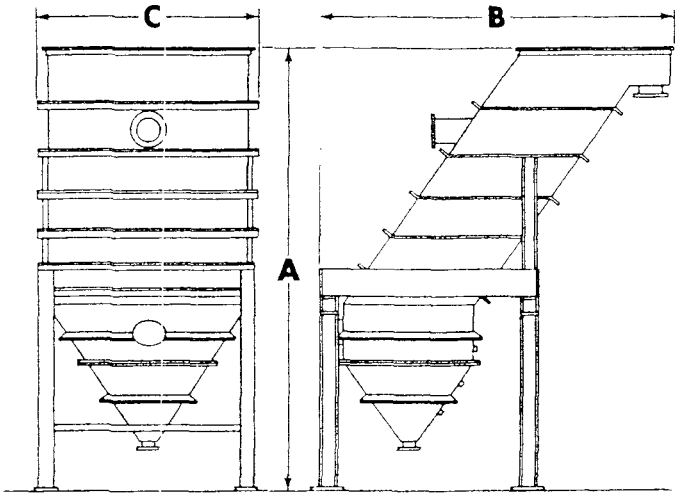

Packaged LGST Units

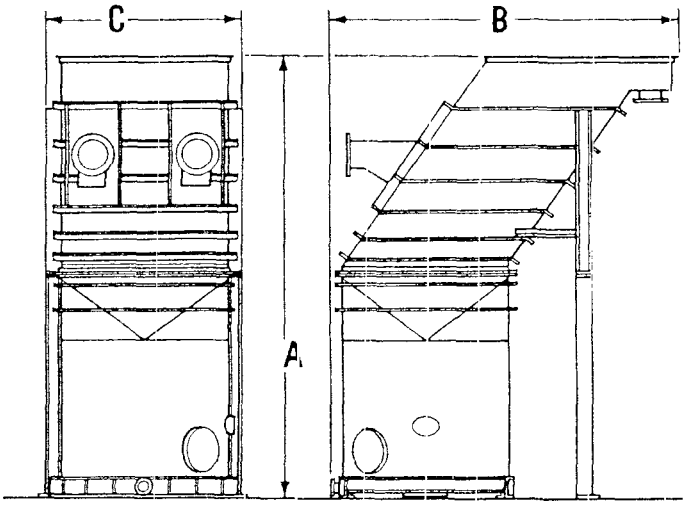

Model Number (settling area/ plate angle)	Approximate Envelope Dimensions (ft.)			Equivalent Clarifier Dia. (ft.), clarification = 80% of settling area
	A - Height	B - Length	C - Width	
75/55	9	8	4	8.5
125/55*	13*	10	4	11
200/55	10	9	6	14
300/55*	14*	11	6	17
570/55*	14*	14	6	24
860/55*	18*	15	9	30
1135/55*	18*	16	9	35
1500/55*	20*	16	12	39
2000/55	20	18	12	45
2500/55	20	20	12	50
3900/55	27	27	14	63

Model Number (settling area/ plate angle)	Approximate Envelope Dimensions (ft.)			Equivalent Clarifier Dia. (ft.), clarification = 80% of settling area
	A - Height	B - Length	C - Width	
150/55	19	11	6	12
360/55	19	13	8	19
620/55	20	15	9	25
1120/55*	22	17	10	31
1800/55	20	19	10	41
2480/55	22	20	10	50
3250/55	22	23	10	56
3915/55	23	25	12	63

* 1.5 - 2 shorter versions are also available.

Standard Features

- Inlet and outlet nozzles
- Supporting members for tank
- Epoxy painted, carbon steel tank
- Feed baffles and discharge flumes
- FRP plates, PVC I-beams, and Nylon clips
- [illegible] are seismic 4 design, others are seismic 2

Options

- Tank covers
- Rubber-lined tanks
- Oil-removal nozzles
- Skimming mechanism
- Special coatings or linings
- Level control for sludge removal
- Rapid-mix compartment with mixer
- Acid-resistant FRP settling plates
- 304/316/317 - stainless steel for wetted surfaces
- Flocculator tank with variable-speed mechanism

16|16

Lamella® Gravity Settler / Thickener

By EO 7/30/01
CK BY: JJB 8/1/0

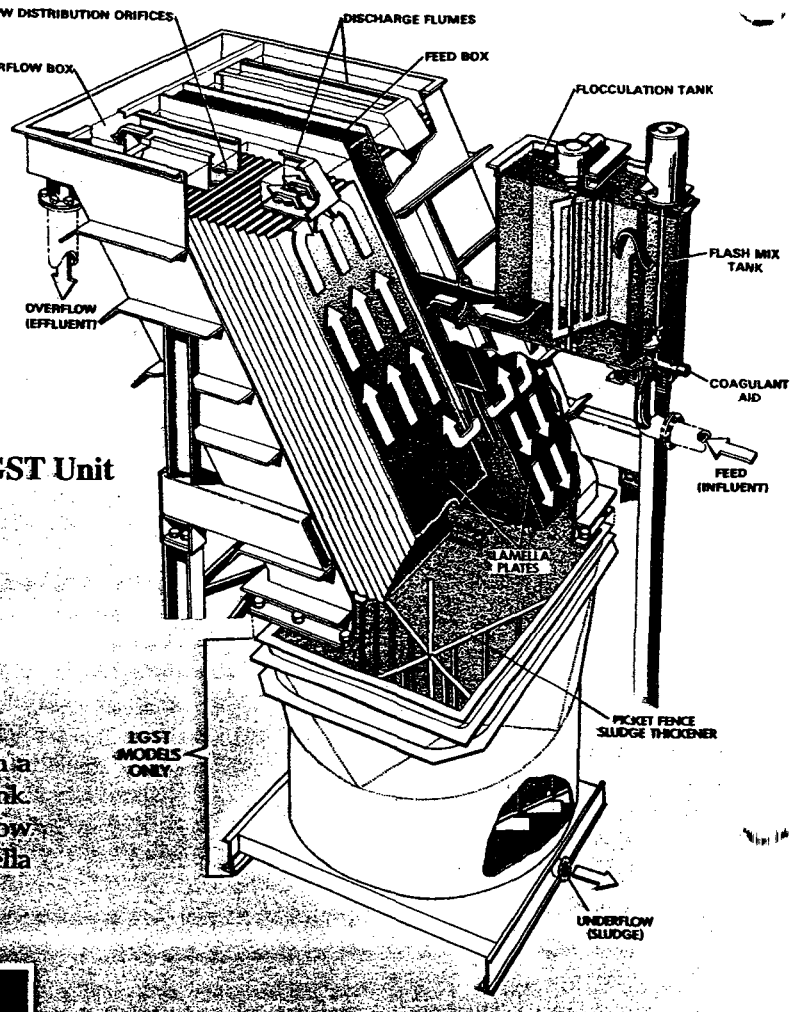

Packaged LGST Unit

The LGST is a high-rate gravity settler combined with a circular picket fence sludge thickener/scraper in one tank. The settler section utilizes the same counter-current flow principle and inclined-plate design used in packaged Lamella Gravity Settlers.

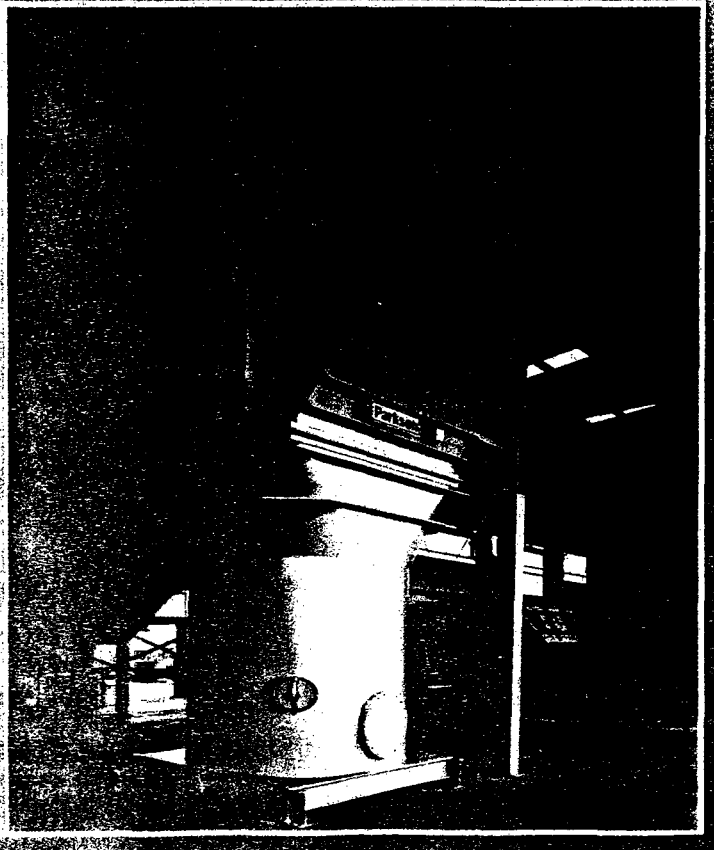

The LGST is designed to:

- Handle flow rates and/or solids loadings beyond that which the packaged Lamella Gravity Settler alone can handle economically and/or
- Produce thicker underflow sludge concentrations by [illegible] solids are being settled [illegible]
- [illegible] in sludge [illegible]

The LGST provides these benefits:

- [illegible] reduced by 20% or more [illegible]
- [illegible] up to 5 times higher [illegible]
- [illegible] are virtually eliminated [illegible]
- [illegible] plate [illegible]
- [illegible] maintenance [illegible]
- [illegible] conditions [illegible] are being [illegible]

CALCULATION COVER SHEET

PROJECT New Bedford Harbor Superfund Site OU#1

SUBJECT Clarifier Discharge Line Sizing

CLIENT U.S. Army Corps of Engineers – New England District (USACE – NED)

CALCULATION NO. P-09 PROJECT NO. 5197.1720.3392

NO OF SHEETS 11 DESIGN LEVEL _____

CALCULATION BY OTHERS _____ YES _____ NO

PREPARER J. Brinkman

REVIEWED BY E. [illegible] DATE 10-30-01

ASSUMPTIONS THAT REQUIRE CONFIRMATION _____ YES _____ NO

ASSUMPTIONS CONFIRMED BY _____ DATE _____

PRINT NAME, DATE AND INITIAL

Rev No	Affected Sheets	Prepared by Date	Checked by Date	Verified by Date

P-9

BY: JJB 10/29/01
Chk'd EG 10/30/01

DETERMINE REQUIRED PIPE SIZE FOR INCLINED PLATE CLARIFIER DISCHARGE.

FLOWRATE = 2,000 gpm

$= 7.57086 \ m^3/min = 0.1262 \ m^3/s$

ASSUME VALUES OF 0.013 AND 0.015 FOR MANNING'S n

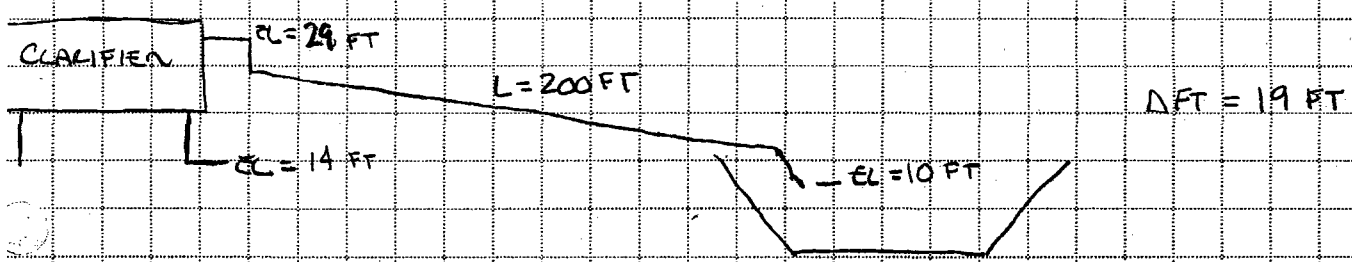

$$\text{SLOPE} = \frac{19 \text{ FT}}{200 \text{ FT}} = 0.095$$

REQUIRED PIPE DIAMETER @ n = 0.013 (FIGURE 2-12) IS 10 INCHES. HOWEVER, THIS ASSUMES STRAIGHT PIPE. THEREFORE, WTP WILL USE 12 INCH DIAMETER PIPE TO ACCOUNT FOR LINE LOSSES DUE TO FITTINGS

FOR n = 0.015 (FIGURE 2-14) REQUIRED PIPE DIAMETER ALSO IS 10 INCHES. HOWEVER, DESIGN WILL UTILIZE A 12 INCH PIPE.

, will be
ed, then
ler,
d in
e actual

chapter,
applica-
They are
o sewers
ncircular

mmon in
lve flow
, such as
ty design
for these
design.

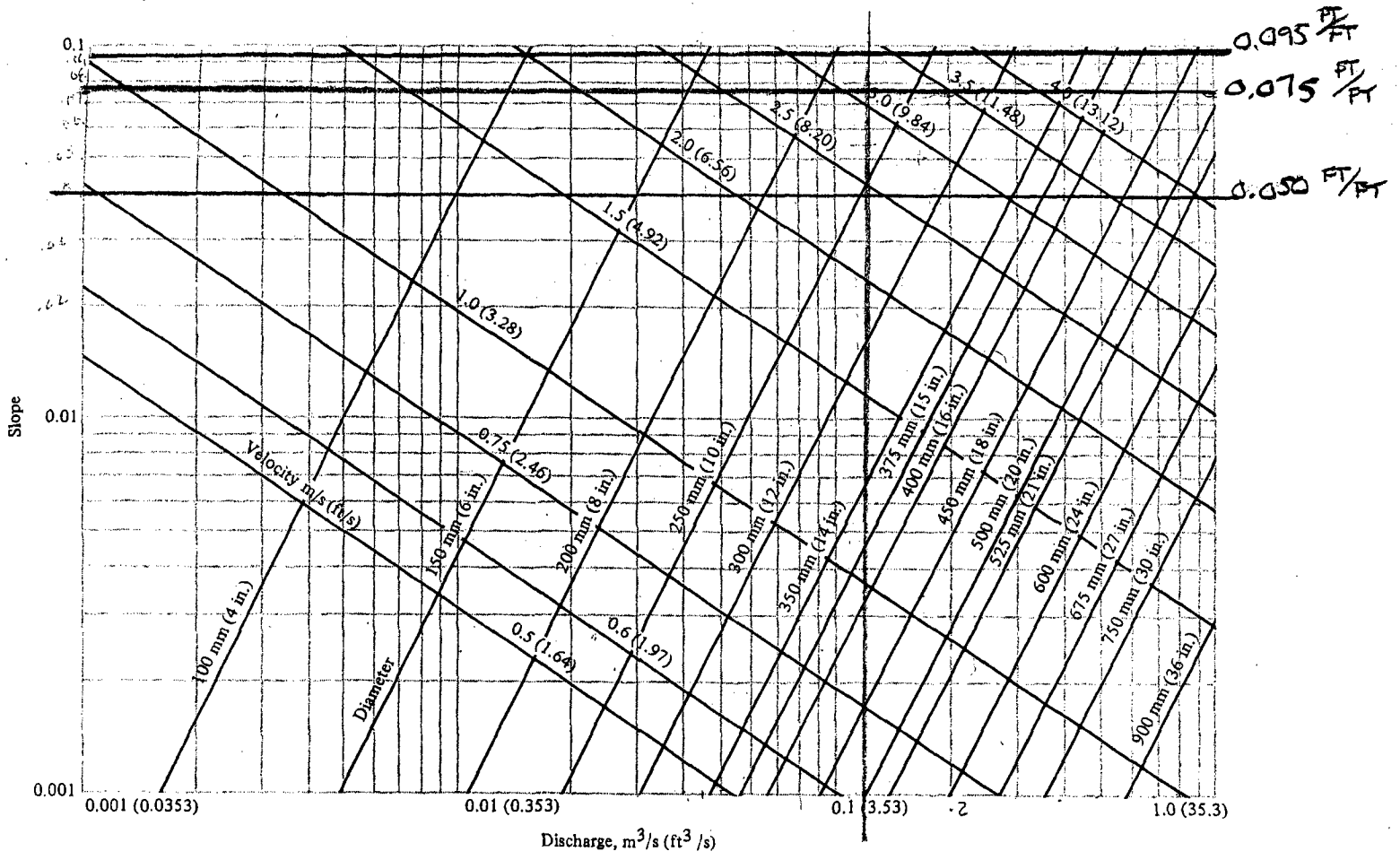

Figure 2-12 Nomograph for Manning equation ($n = 0.013$) for flows between 0.001 and 1.0 m³/s and slopes between 0.001 and 0.1 m/m. Note: m³/s × 35.3147 = ft³/s; m × 3.2808 = ft; mm × 0.03937 = in.

3/11
By: JJB 4/25/01
Chkd: CG 10/3/01

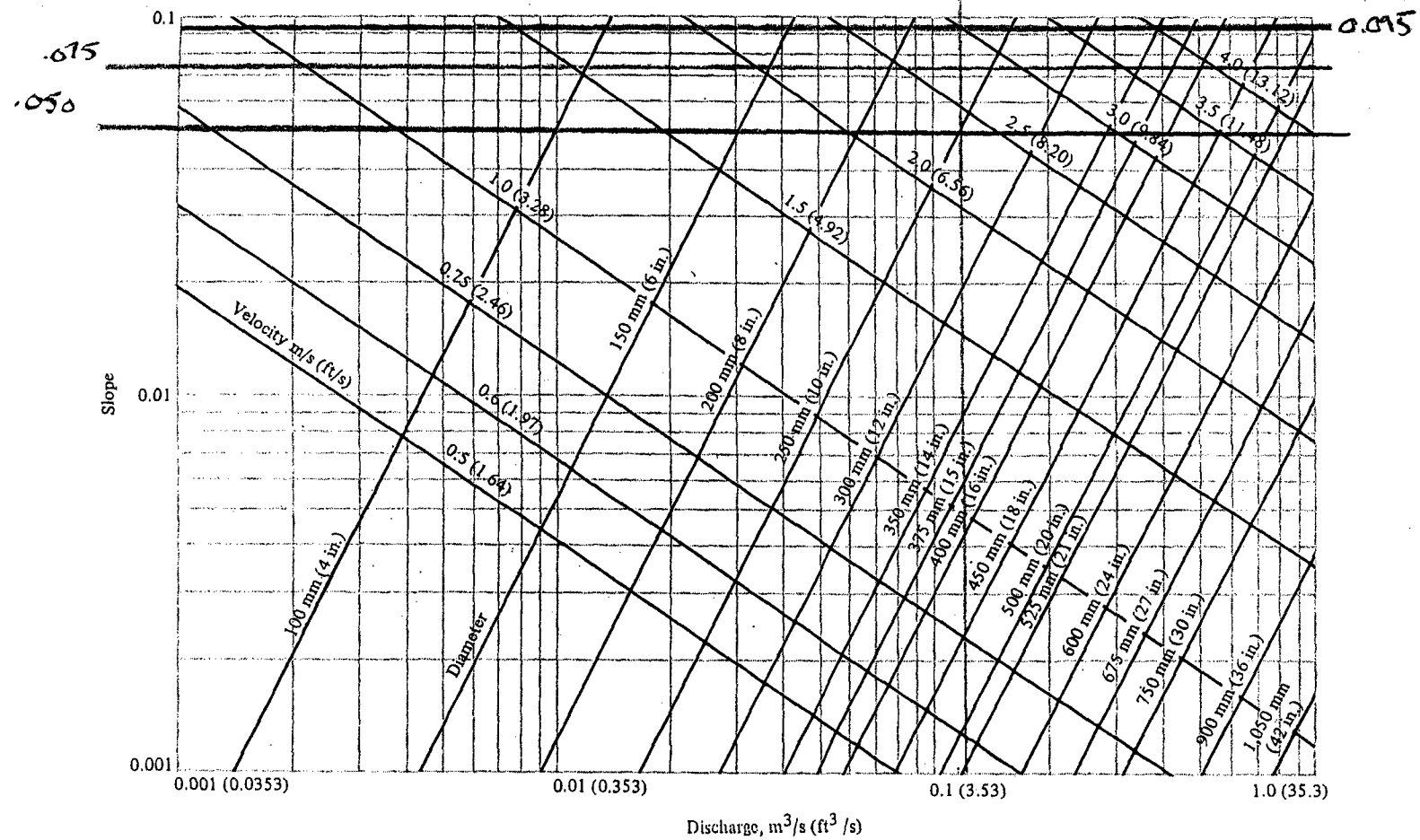

Figure 2-14 Nomograph for Manning equation ($n = 0.015$) for flow between 0.001 and 1.0 m^3/s and slopes between 0.001 and 0.1 m/m. Note: $m^3/s \times 35.3147 = ft^3/s$; $m \times 3.2808 = ft$; $mm \times 0.03937 = in$.

Chk'd EG 10/30/01

by JJB 10/25/01

4111

5/11

By: JWB 12/29/14

Chk'd EG 12/30/01

Table 2-1 Values of n to be used with the Manning equation [2]

Surface	Best	Good	Fair	Bad
Uncoated cast-iron pipe	0.012	0.013	0.014	0.015
Coated cast-iron pipe	0.011	0.012[a]	0.013[a]	
Commercial wrought-iron pipe, black	0.012	0.013	0.014	0.015
Commercial wrought-iron pipe, galvanized	0.013	0.014	0.015	0.017
Smooth brass and glass pipe	0.009	0.010	0.011	0.013
Smooth lockbar and welded "OD" pipe	0.010	0.011[a]	0.013[a]	
Riveted and spiral steel pipe	0.013	0.015[a]	0.017[a]	
Vitrified sewer pipe	{0.010, 0.011}	0.013[a]	0.015	0.017
Common clay drainage tile	0.011	0.012[a]	0.014[a]	0.017
Glazed brickwork	0.011	0.012	0.013[a]	0.015
Brick in cement mortar; brick sewers	0.012	0.013	0.015[a]	0.017
Neat cement surfaces	0.010	0.011	0.012	0.013
Cement mortar surfaces	0.011	0.012	0.013[a]	0.015
Concrete pipe	0.012	0.013	0.015[a]	0.016
Wood stave pipe	0.010	0.011	0.012	0.013
Plank flumes				
Planed	0.010	0.012[a]	0.013	0.014
Unplaned	0.011	0.013[a]	0.014	0.015
With battens	0.012	0.015[a]	0.016	
Concrete-lined channels	0.012	0.014[a]	0.016[a]	0.018
Cement-rubble surface	0.017	0.020	0.025	0.030
Dry-rubble surface	0.025	0.030	0.033	0.035
Dressed-ashlar surface	0.013	0.014	0.015	0.017
Semicircular metal flumes, smooth	0.011	0.012	0.013	0.015
Semicircular metal flumes, corrugated	0.0225	0.025	0.0275	0.030
Canals and ditches				
Earth, straight and uniform	0.017	0.020	0.0225[a]	0.025
Rock cuts, smooth and uniform	0.025	0.030	0.033[a]	0.035
Rock cuts, jagged and irregular	0.035	0.040	0.045	
Winding sluggish canals	0.0225	0.025[a]	0.0275	0.030
Dredged-earth channels	0.025	0.0275[a]	0.030	0.033
Canals with rough stony beds, weeds on earth banks	0.025	0.030	0.035[a]	0.040
Earth bottom, rubble sides	0.028	0.030[a]	0.033[a]	0.035
Natural-stream channels				
1. Clean, straight bank, full stage, no rifts or deep pools	0.025	0.0275	0.030	0.033
2. Same as (1), but some weeds and stones	0.030	0.033	0.035	0.040
3. Winding, some pools and shoals, clean	0.033	0.035	0.040	0.045
4. Same as (3), lower stages, more ineffective slope and sections	0.040	0.045	0.050	0.055
5. Same as (3), some weeds and stones	0.035	0.040	0.045	0.050
6. Same as (4), stony sections	0.045	0.050	0.055	0.060
7. Sluggish river reaches, rather weedy or with very deep pools	0.050	0.060	0.070	0.080
8. Very weedy reaches	0.075	0.100	0.125	0.150

[a]Values commonly used in designing.

By: JB 10/29/01
Chk'd EG 10/30/01

6/11

Table 2-3 Sewer pipe sizes in metric and U.S. customary units

Metric sizes, mm	Existing U.S. pipe sizes in	Existing U.S. pipe sizes mm
100	4	101.6
125	5	127.0
150	6	152.4
200	8	203.2
250	10	254.0
300	12	304.8
350	14	355.6
375	15	381.0
400	16	406.4
450	18	457.2
500	20	508.0
525	21	533.4
600	24	609.6
675	27	685.8
750	30	762.0
900	36	914.4
1,050	42	1,066

Note: mm × 0.03937 = in

For example, an 8-in pipe, which is actually 203.2 mm in diameter, will be called a 200-mm pipe. In effect, if this system of designation is adopted, then the capacities and velocities computed will be about 4 and 2 percent smaller, respectively, than the actual values. In computations for pipes manufactured in metric sizes, however, capacities and velocities computed will be the actual values. In this book, metric pipe sizes are used for all computations.

2-4 DESIGN CHARTS AND TABLES

To aid in the solution of the flow equations discussed previously in this chapter, various design charts and tables have been developed. Several that are applicable to sewers when they are flowing full are presented in this section. They are followed by a discussion of Manning's equation, which is applicable to sewers flowing partly full. Finally, charts for the hydraulic elements of noncircular sewers are presented.

Sewers Flowing Full

As mentioned previously, the Manning equation is the one most common in sewer design. The most direct method of using this equation to solve flow problems in sewers and pipes in general is by preparing nomographs, such as those shown in Figs. 2-12 through 2-15, which can be prepared for any design conditions. Values of 0.013 and 0.015 for Manning's n were selected for these diagrams because they are the most frequently used values in sewer design.

r, will be
then
aller,
ctured in
he actual

s chapter,
e applica-
They are
to sewers
oncircular

ommon in
olve flow
s, such as
ny design
l for these
r design.

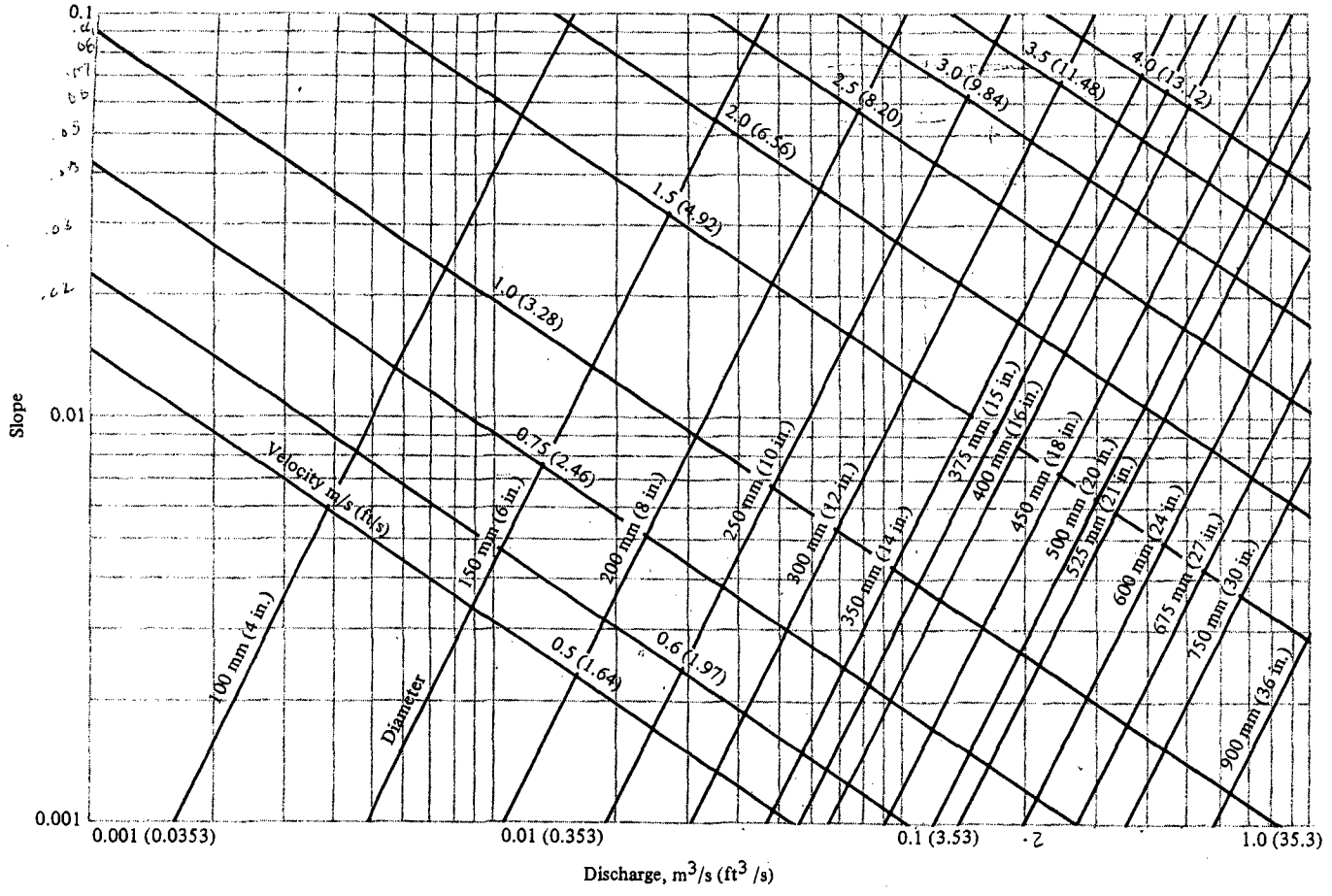

Figure 2-12 Nomograph for Manning equation ($n = 0.013$) for flows between 0.001 and 1.0 m³/s and slopes between 0.001 and 0.1 m/m. Note: m³/s × 35.3147 = ft³/s; m × 3.2808 = ft; mm × 0.03937 = in.

711
By: JJB 1/29/01
Checked CC 10/30/01

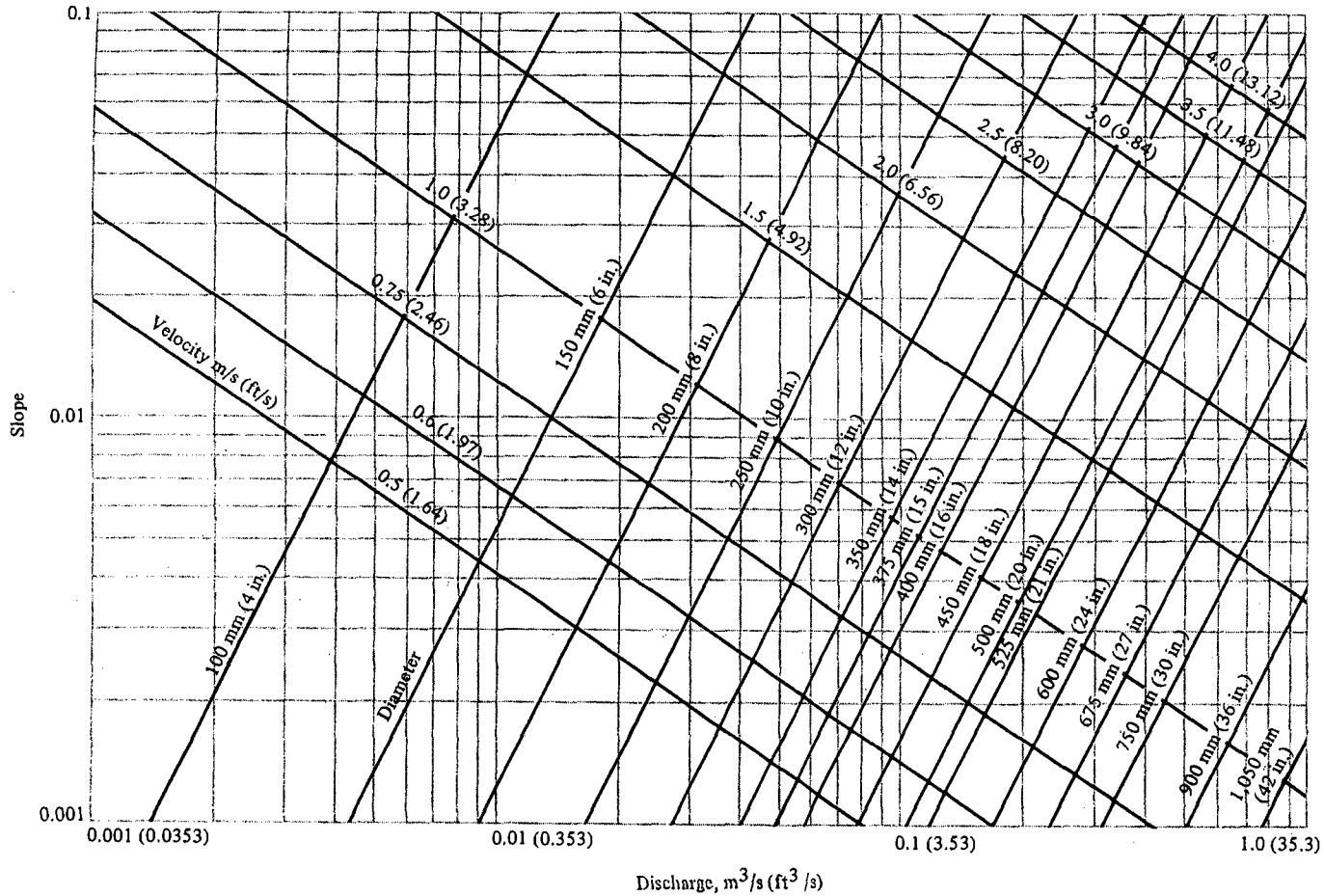

Figure 2-14 Nomograph for Manning equation ($n = 0.015$) for flow between 0.001 and 1.0 m³/s and slopes between 0.001 and 0.1 m/m. Note: m³/s × 35.3147 = ft³/s; m × 3.2808 = ft; mm × 0.03937 = in.

8/11
By: JJB 10/29/01
Chkd by 10/30/01

9/11

By: JJB 10/29/01
Chkd EG 10/30/01

Sewers Flowing Partly Full

In general, sewers are designed to flow full only under maximum conditions. Therefore, in many of the problems arising in sewer design, it is necessary to estimate the velocity and discharge when a sewer is partly filled. The relations between hydraulic elements for flow at full depth and at other depths in circular sewers, computed according to the Manning equation, are shown in Fig. 2-16. The hydraulic elements for a circular sewer, as shown in Fig. 2-16, are the hydraulic radius R, the cross-sectional area of the flowing stream A, the average velocity V, and the rate of discharge Q.

If the variation of n with depth is to be neglected, calculations involving flow in partly filled sewers can easily be handled by using the data in Tables 2-4 and 2-5 adapted from Brater and King's *Handbook of Hydraulics* [2]. The following two examples illustrate the use of Fig. 2-16 and Tables 2-4 and 2-5.

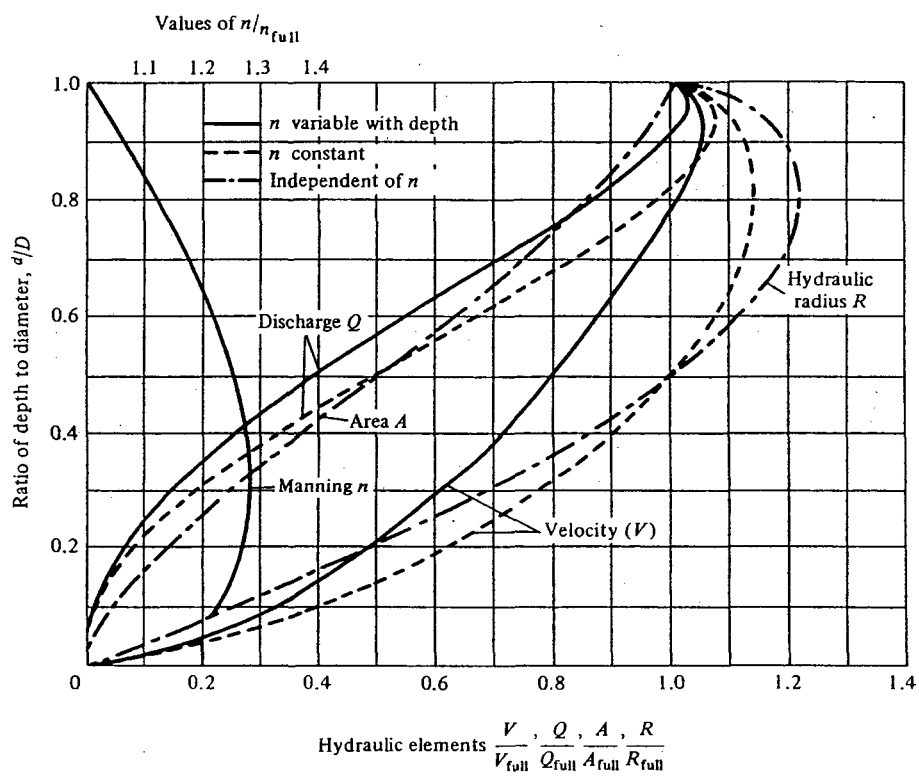

Figure 2-16 Hydraulic elements for circular sewers [10].

Figure 2-15 Nomograph for Manning equation (n = 0.015) ows between 0.01 and 10.0 m³/s and slopes between 0.001 and 0.01 m/m. Note: 1 × 35.3147 = ft³/s; m × 3.2808 = ft; mm × 0.03937 = in.

By: JTB 10/24/01 10/11

chk'd EG 10/30/01

Table 2-4 Values of K for circular channels in terms of depth of flow in the equation[a] $Q = (K/n)d^{8/3}S^{1/2}$

$\frac{d^b}{D}$	0.00	0.01	0.02	0.03	0.04	0.05	0.06	0.07	0.08	0.09
0.0	....	10.11	7.11	5.77	4.96	4.41	4.00	3.68	3.42	3.20
0.1	3.02	2.85	2.72	2.60	2.49	2.39	2.29	2.21	2.13	2.06
0.2	2.00	1.93	1.88	1.82	1.77	1.72	1.68	1.63	1.59	1.55
0.3	1.51	1.48	1.44	1.41	1.38	1.35	1.32	1.29	1.26	1.23
0.4	1.21	1.18	1.16	1.14	1.11	1.09	1.07	1.05	1.03	1.01
0.5	0.990	0.971	0.952	0.934	0.916	0.899	0.882	0.805	0.849	0.833
0.6	0.818	0.802	0.787	0.772	0.758	0.744	0.730	0.716	0.702	0.690
0.7	0.676	0.662	0.650	0.637	0.624	0.612	0.600	0.588	0.576	0.564
0.8	0.552	0.541	0.529	0.518	0.507	0.495	0.484	0.473	0.462	0.451
0.9	0.440	0.429	0.418	0.407	0.395	0.384	0.372	0.360	0.348	0.334
1.0	0.312									

[a]Adapted from Ref. 2,
where Q = flowrate, m^3/s
n = Manning coefficient of friction
d = depth of flow, m
S = slope of energy grade line, m/m.
[b]D = diameter of conduit, m.
Note: $m^3/s \times 35.3147 = ft^3/s$
$m \times 3.2808 = ft$

Table 2-5 Values of K' for circular channels in terms of diameter in the equation[a] $Q = (K'/n)D^{8/3}S^{1/2}$

$\frac{d^b}{D}$	0.00	0.01	0.02	0.03	0.04	0.05	0.06	0.07	0.08	0.09
0.0	....	0.000047	0.00021	0.00050	0.00093	0.00150	0.00221	0.00306	0.00407	0.00521
0.1	0.00651	0.00795	0.00953	0.0113	0.0131	0.0152	0.0173	0.0196	0.0220	0.0246
0.2	0.0273	0.0301	0.0331	0.0362	0.0394	0.0427	0.0461	0.0497	0.0534	0.0572
0.3	0.0610	0.0650	0.0691	0.0733	0.0776	0.0820	0.0864	0.0910	0.0956	0.1003
0.4	0.1050	0.1099	0.1148	0.1197	0.1248	0.1298	0.1349	0.1401	0.1453	0.1506
0.5	0.156	0.161	0.166	0.172	0.177	0.183	0.188	0.193	0.199	0.204
0.6	0.209	0.215	0.220	0.225	0.231	0.236	0.241	0.246	0.251	0.256
0.7	0.261	0.266	0.271	0.275	0.280	0.284	0.289	0.293	0.297	0.301
0.8	0.305	0.308	0.312	0.315	0.318	0.321	0.324	0.326	0.329	0.331
0.9	0.332	0.334	0.335	0.335	0.335	0.335	0.334	0.332	0.329	0.325
1.0	0.312									

[a]Adapted from Ref. 2,
where Q = flowrate, m^3/s
n = Manning coefficient of friction
D = diameter of conduit
S = slope of energy grade line, m/m.
[b]d = depth of flow
Note: $m^3/s \times 35.3147 = ft^3/s$
$m \times 3.2808 = ft$

By: JJB 10/29/01
Chk'd EB 10/30/01

11/11

Example 2-4 Determination of depth and velocity in a sewer flowing partly full Determine the depth of flow and velocity in a sewer with a diameter of 300 mm (12 in) laid on a slope of 0.005 m/m (ft/ft) with an n value of 0.015 when discharging 0.01 m³/s (0.35 ft³/s).

SOLUTION

1. Compute the value of K' in the equation

$$Q = (K'/n)\, D^{8/3} S^{1/2}$$

$$K' = \frac{nQ}{D^{8/3} S^{1/2}} = \frac{0.015 \times 0.01 \text{ m}^3/\text{s}}{(0.3 \text{ m})^{8/3}\,(0.005 \text{ m/m})^{1/2}} = 0.0526$$

2. To determine depth of flow, locate in Table 2-5 the computed value of K' and find the corresponding value of d/D. The value from Table 2-5 is approximately 0.28.

$$\text{Depth of flow } d = 300 \text{ mm} \times 0.28 = 84 \text{ mm } (3.31 \text{ in})$$

3. Compute the velocity. From Fig. 2-16, for a value of d/D of 0.28 (84/300), the area of flow is equal to 0.22 times the area of the pipe, which is equal to 0.22(0.0707 m²) = 0.0156 m² (0.168 ft). The velocity is equal to:

$$\text{Velocity} = \frac{0.01 \text{ m}^3/\text{s}}{0.0156 \text{ m}^2} = 0.641 \text{ m/s } (2.11 \text{ ft/s})$$

Example 2-5 Determination of the diameter of a sewer flowing partly full Determine the diameter of a sewer required to handle a flow of 0.15 m³/s (5.3 ft³/s) when flowing 65 percent full. The sewer is to be laid at a slope of 0.001 m/m (ft/ft) and the n value is assumed to be 0.013.

SOLUTION

1. Determine K' in the equation

$$Q = (K'/n)\, D^{8/3} S^{1/2}$$

Entering Table 2-5 with a d/D value of 0.65, the corresponding value of K' is 0.236.

2. Compute diameter D.

$$D = \left(\frac{Qn}{K' S^{1/2}}\right)^{3/8} = \left[\frac{0.15 \text{ m}^3/\text{s} \times 0.013}{0.236 \times (0.001 \text{ m/m})^{1/2}}\right]^{3/8}$$

$$= 0.605 \text{ m } (1.98 \text{ ft})$$

Use a 600-mm (24-in) pipe.

Hydraulic Elements of Noncircular Sewer Sections

Almost all the sewers now constructed in the United States are circular cross sections. In the past, however, a wide variety of noncircular sewer sections were used, including egg-shaped, semielliptical, horseshoe, basket handle, oval, catenary, gothic, parabolic, and elliptical. The first four of these were the more popular shapes. Typical examples of these sections, along with data on their shapes and hydraulic elements, are shown in Figs. 2-17 and 2-18 and in

CALCULATION COVER SHEET

PROJECT New Bedford Harbor Superfund Site OU#1

SUBJECT Chemical Feed Pump (MP-201, MP-202, MP-203) Sizing

CLIENT U.S. Army Corps of Engineers – New England District (USACE – NED)

CALCULATION NO. P-10 PROJECT NO. 5197.1720.3392

NO OF SHEETS 16 DESIGN LEVEL _____

CALCULATION BY OTHERS _____ YES X NO

PREPARER E. Griffin

REVIEWED BY _____ DATE 10-30-01

ASSUMPTIONS THAT REQUIRE CONFIRMATION _____ YES X NO

ASSUMPTIONS CONFIRMED BY _____ DATE _____

PRINT NAME, DATE AND INITIAL

Rev No	Affected Sheets	Prepared by Date	Checked by Date	Verified by Date

by EG 7/26/01
CK: JOB 7/27/01

Chemical Feed System Design Assumptions
New Bedford Harbor Superfund Site – OU#1

Polymer Calculation Design Assumptions:

- Density of polymer = 8.59 lb/gal
- Polymer solution strength = 0.5%
- Minimum wastewater flow rate = 700 gpm
- Maximum wastewater flow rate = 2,000 gpm
- Wastewater treatment system will operate 24 hours/day, 7 days/week
- Polymer will be delivered to site and stored in 55-gallon drums supplied by vendor
- Polymer blending system to be used to mix 0.5% solution

Alum Calculation Design Assumptions:

- Density of alum = 11.8 lb/gal
- Alum solution strength = 48.5%
- Minimum wastewater flow rate = 700 gpm
- Maximum wastewater flow rate = 2,000 gpm
- Wastewater treatment system will operate 24 hours/day, 7 days/week
- Tank sizing factor of safety = 25%
- Alum will be delivered to site at solution strength of 48.5%

Algaecide Calculation Design Assumptions:

- Density of algaecide = 1.09 g/mL or 9.10 lb/gal (Tolcide PS 200)
- Algaecide solution strength = 100%
- Minimum wastewater flow rate = 700 gpm
- Maximum wastewater flow rate = 2,000 gpm
- Wastewater treatment system will operate 24 hours/day, 7 days/week
- Algaecide will be delivered to site and stored in 55-gallon drums supplied by vendor

FOSTER WHEELER ENVIRONMENTAL CORPORATION

BY EG DATE 7/26/01 SHEET 3 OF 16

CHKD. BY JJB DATE 7/27/01 OFS NO. DEPT. NO.

CLIENT USACE

PROJECT New Bedford Harbor Superfund Site

SUBJECT Chemical Feed Systems (Polymer + Alum + Algaecide)

ASSUMPTIONS: stated

GIVEN:
- minimum wastewater flow rate, Q_{MIN} = 700 gpm
- Maximum wastewater flow rate, Q_{MAX} = 2000 gpm
- polymer dosage = 2 ppm
- alum dosage = 150 ppm
- algaecide dosage = 25 ppm

POLYMER

application rate = flow rate × concentration

$$Q_{MIN}: \left(\frac{700\ gal}{min}\right)\left(\frac{2\ mg}{L}\right)\left(\frac{3.785\ L}{gal}\right)\left(\frac{g}{1000\ mg}\right)\left(\frac{2.205\times10^{-3}\ lb}{g}\right)\left(\frac{60\ min}{hr}\right)\left(\frac{24\ hr}{day}\right)$$

$$= \boxed{16.8\ lb/day}$$

$$Q_{MAX}: \left(\frac{2000\ gal}{min}\right)\left(\frac{2\ mg}{L}\right)\left(\frac{3.785\ L}{gal}\right)\left(\frac{g}{1000\ mg}\right)\left(\frac{2.205\times10^{-3}\ lb}{g}\right)\left(\frac{60\ min}{hr}\right)\left(\frac{24\ hr}{day}\right)$$

$$= \boxed{48.1\ lb/day}$$

$$\text{Chemical pumping rate} = \frac{\text{application rate}}{\text{polymer density} \times \text{soln strength}}$$

$$Q_{MIN}: \left[\frac{16.8\ lb/day}{(8.59\ lb/gal)(0.005)}\right]\left[\frac{day}{24\ hr}\right]$$

$$= \boxed{16.3\ gal/hr}$$

$$Q_{MAX}: \left[\frac{48.1\ lb/day}{(8.59\ lb/gal)(0.005)}\right]\left[\frac{day}{24\ hr}\right]$$

$$\boxed{46.7\ gal/hr}$$

FOSTER WHEELER ENVIRONMENTAL CORPORATION

BY EG DATE 7/26/01 SHEET 4 OF 16

CHKD. BY TB DATE 7/28/01 OFS NO. DEPT. NO.

CLIENT

PROJECT

SUBJECT

lbs polymer/month = application rate x 30 days/mo.

Q_{MIN}: $\left(\frac{16.8\ lb}{day}\right)\left(\frac{30\ day}{mo.}\right) = \boxed{504\ lb/mo}$

Q_{MAX}: $\left(\frac{48.1\ lb}{day}\right)\left(\frac{30\ day}{mo.}\right) = \boxed{1{,}443\ lb/mo.}$

gal polymer/month = chemical pumping rate x time x soln strength

Q_{MIN}: $\left(\frac{16.3\ gal}{hr}\right)\left(\frac{24\ hr}{day}\right)\left(\frac{30\ day}{mo.}\right)(0.005) = \boxed{58.7\ gal/mo}$

Q_{MAX}: $\left(\frac{46.7\ gal}{hr}\right)\left(\frac{24\ hr}{day}\right)\left(\frac{30\ day}{mo.}\right)(0.005) = \boxed{168\ gal/mo.}$

drums polymer/year: $\frac{gal/mo. \times 12\ mo./year}{55\ gal/drum}$

Q_{MIN}: $\left(\frac{58.7\ gal}{mo}\right)\left(\frac{12\ mo}{year}\right)\left(\frac{drum}{55\ gal}\right) = \boxed{12.8\ drums}$

Q_{MAX}: $\left(\frac{168\ gal}{mo}\right)\left(\frac{12\ mo}{yr}\right)\left(\frac{drum}{55\ gal}\right) = \boxed{36.7\ drums}$

NOTE: numbers may differ from Excel spreadsheet due to significant figures being carried

FOSTER WHEELER ENVIRONMENTAL CORPORATION

BY EG DATE 7/26/01 SHEET 5 OF 16

CHKD. BY JB DATE 7/27/01 OFS NO. DEPT. NO.

CLIENT

PROJECT

SUBJECT

ALUM

application rate = flow rate x concentration

$$Q_{MIN}: \left(\frac{700\ gal}{min}\right)\left(\frac{150\ mg}{L}\right)\left(\frac{3.785\ L}{gal}\right)\left(\frac{g}{1000\ mg}\right)\left(\frac{2.205\times10^{-3}\ lb}{g}\right)\left(\frac{60\ min}{hr}\right)\left(\frac{24\ hr}{day}\right)$$

$$= \boxed{1{,}262\ lb/day}$$

$$Q_{MAX}: \left(\frac{2000\ gal}{min}\right)\left(\frac{150\ mg}{L}\right)\left(\frac{3.785\ L}{gal}\right)\left(\frac{g}{1000\ mg}\right)\left(\frac{2.205\times10^{-3}\ lb}{g}\right)\left(\frac{60\ min}{hr}\right)\left(\frac{24\ hr}{day}\right)$$

$$= \boxed{3{,}605\ lb/day}$$

alum feed rate = $\dfrac{\text{application rate}}{\text{alum density} \times \text{soln strength}}$

$$Q_{MIN}: \left[\frac{1262\ lb/day}{(11.8\ lb/gal)(0.485)}\right]\left[\frac{day}{24\ hr}\right]$$

$$= \boxed{9.2\ gal/hr}$$

$$Q_{MAX}: \left[\frac{3605\ lb/day}{(11.8\ lb/gal)(0.485)}\right]\left[\frac{day}{24\ hr}\right]$$

$$= \boxed{26.2\ gal/hr}$$

lbs alum/month = application rate x 30 days/mo.

$$Q_{MIN}: (1262\ lb/day)(30\ day/mo) = \boxed{37{,}860\ lb/mo}$$

$$Q_{MAX}: (3605\ lb/day)(30\ day/mo) = \boxed{108{,}150\ lb/mo}$$

FOSTER WHEELER ENVIRONMENTAL CORPORATION

BY GG DATE 7/26/01 SHEET 6 OF 16

CHKD. BY JB DATE 7/27/01 OFS NO. DEPT. NO.

CLIENT

PROJECT

SUBJECT

gal. alum / month = feed rate x time

Q_{MIN}: $\left(\frac{9.2\ gal}{hr}\right)\left(\frac{24\ hr}{day}\right)\left(\frac{30\ day}{mo.}\right) = \boxed{6{,}624\ gal/mo}$

Q_{MAX}: $\left(\frac{26.2\ gal}{hr}\right)\left(\frac{24\ hr}{day}\right)\left(\frac{30\ day}{mo}\right) = \boxed{18{,}864\ gal/mo}$

theoretical storage tank size: - for delivery once/month
- F.S. = 25%

$Q_{MIN} = (6{,}624\ gal/mo)(1.25) = \boxed{8{,}280\ gal}$

$Q_{MAX} = (18{,}864\ gal/mo)(1.25) = \boxed{23{,}580\ gal}$

NOTE: numbers may differ from Excel spreadsheet due to significant figures being carried

ALGAECIDE

application rate = flow rate x concentration

Q_{MIN}: $\left(\frac{700\ gal}{min}\right)\left(\frac{25\ mg}{L}\right)\left(\frac{3.785\ L}{gal}\right)\left(\frac{g}{1000\ mg}\right)\left(\frac{2.205\times10^{-3}\ lb}{g}\right)\left(\frac{60\ min}{hr}\right)\left(\frac{24\ hr}{day}\right)$
$= \boxed{210.3\ lb/day}$

Q_{MAX}: $\left(\frac{2000\ gal}{min}\right)\left(\frac{25\ mg}{L}\right)\left(\frac{3.785\ L}{gal}\right)\left(\frac{g}{1000\ mg}\right)\left(\frac{2.205\times10^{-3}\ lb}{g}\right)\left(\frac{60\ min}{hr}\right)\left(\frac{24\ hr}{day}\right)$
$= \boxed{600.9\ lb/day}$

FOSTER WHEELER ENVIRONMENTAL CORPORATION

BY EG DATE 7/26/01 SHEET 7 OF 16

CHKD. BY JB DATE 7/27/01 OFS NO. DEPT. NO.

CLIENT

PROJECT

SUBJECT

Chemical pumping rate = $\frac{\text{application rate}}{\text{algaecide density} \times \text{sol'n strength}}$

$$Q_{MIN} = \left[\frac{210.3 \text{ lb/day}}{\left(1.09\frac{g}{mL}\right)\left(2.205\times10^{-3}\frac{lb}{g}\right)\left(1000\frac{mL}{L}\right)\left(\frac{3.785L}{gal}\right)(1)}\right]\left[\frac{day}{24hr}\right]$$

$$= \boxed{1.0 \text{ gal/hr}}$$

$$Q_{MAX} = \left[\frac{600.9 \text{ lb/day}}{\left(1.09\frac{g}{mL}\right)\left(2205\times10^{-3}\frac{lb}{g}\right)\left(1000\frac{mL}{L}\right)\left(3.785\frac{L}{gal}\right)(1)}\right]\left[\frac{day}{24hr}\right]$$

$$= \boxed{2.8 \text{ gal/hr}}$$

lbs algaecide/month = application rate × 30 days/mo.

$$Q_{MIN}: \left(\frac{210.3 lb}{day}\right)\left(\frac{30 day}{mo}\right) = \boxed{6{,}309 \text{ lb/mo}}$$

$$Q_{MAX}: \left(\frac{600.9 lb}{day}\right)\left(\frac{30 day}{mo}\right) = \boxed{18{,}027 \text{ lb/mo}}$$

gal algaecide/month = chemical pumping rate × time × sol'n strength

$$Q_{MIN}: \left(\frac{1.0 gal}{hr}\right)\left(\frac{24 hr}{day}\right)\left(\frac{30 day}{mo}\right)(1) = \boxed{720 \text{ gal/mo}}$$

$$Q_{MAX}: \left(\frac{2.8 gal}{hr}\right)\left(\frac{24 hr}{day}\right)\left(\frac{30 day}{mo}\right)(1) = \boxed{2016 \text{ gal/mo}}$$

drums algaecide/year: $\frac{\text{gal/mo} \times 12 \text{ mo/yr}}{55 \text{ gal/drum}}$

$$Q_{MIN}: \left(\frac{720 gal}{mo}\right)\left(\frac{12 mo}{yr}\right)\left(\frac{drum}{55 gal}\right) = \boxed{157 \text{ drums}}$$

FOSTER WHEELER ENVIRONMENTAL CORPORATION

BY Eb DATE 7/26/01 SHEET 8 OF 16

CHKD. BY JB DATE 7/27/01 OFS NO. DEPT. NO.

CLIENT

PROJECT

SUBJECT

Q_{MAX}: $\left(\frac{2016\ gal}{mo}\right)\left(\frac{12\ mo}{yr}\right)\left(\frac{drum}{55\ gal}\right) = \boxed{440\ drums}$

NOTE: numbers may differ from Excel spreadsheet due to significant figures being carried

PUMPS : LMI Milton Roy

Polymer : 16.3-46.7 gal/hr => G52 (53 GPH)

Alum: 9.2-26.2 gal/hr => G51 (26 GPH) or G52 (53 GPH)

Algaecide: 1-2.8 gal/hr => C72 (4.0 GPH)

by CGG 7/26/01
ck: JB 7/27/01

Polymer Calculations

Wastewater Flow Rate = 700 gpm

Polymer Dosage (mg/L)	Polymer Density (lb/gal)	Polymer Solution Strength (%)	Wastewater Flowrate (gpm)	Application Rate (lb/day)	Chemical Pumping Rate (gal/hr)	Chemical Pumping Rate (gal/day)	lbs. of Polymer Required/Month	gal. of Polymer Required/Month	Number of Drums/Year (55-gal)
1	8.59	0.5	700	8.4	8.2	196	252	29	6
2	8.59	0.5	700	16.8	16.3	392	505	59	13
6	8.59	0.5	700	50.5	49.0	1,175	1,514	176	38

Wastewater Flow Rate = 2,000 gpm

Polymer Dosage (mg/L)	Polymer Density (lb/gal)	Polymer Solution Strength (%)	Wastewater Flowrate (gpm)	Application Rate (lb/day)	Chemical Pumping Rate (gal/hr)	Chemical Pumping Rate (gal/day)	lbs. of Polymer Required/Month	gal. of Polymer Required/Month	Number of Drums/Year (55-gal)
1	8.59	0.5	2,000	24.0	23.3	560	721	84	18
2	8.59	0.5	2,000	48.1	46.6	1,119	1,442	168	37
6	8.59	0.5	2,000	144.2	139.9	3,358	4,327	504	110

Alum Calculations

Wastewater Flow Rate = 700 gpm

Alum Dosage (mg/L)	Alum Density (lb/gal)	Alum Solution Strength (%)	Wastewater Flowrate (gpm)	Application Rate (lb/day)	Alum Feed Rate (gal/hr)	Alum Feed Rate (gal/day)	lbs. of Alum Required/Month	gal. of Alum Required/Month	Storage Tank Size for Delivery Once/Month (gal)
50	11.8	48.5	700	421	3.1	73	12,619	2,205	2,756
150	11.8	48.5	700	1,262	9.2	220	37,857	6,615	8,269
200	11.8	48.5	700	1,683	12.2	294	50,476	8,820	11,025

Wastewater Flow Rate = 2,000 gpm

Alum Dosage (mg/L)	Alum Density (lb/gal)	Alum Solution Strength (%)	Wastewater Flowrate (gpm)	Application Rate (lb/day)	Alum Feed Rate (gal/hr)	Alum Feed Rate (gal/day)	lbs. of Alum Required/Month	gal. of Alum Required/Month	Storage Tank Size for Delivery Once/Month (gal)
50	11.8	48.5	2,000	1,202	8.7	210	36,054	6,300	7,875
150	11.8	48.5	2,000	3,605	26.2	630	108,163	18,900	23,625
200	11.8	48.5	2,000	4,807	35.0	840	144,218	25,200	31,500

Algaecide Calculations

Wastewater Flow Rate = 700 gpm

Algaecide Dosage (mg/L)	Algaecide Density (lb/gal)	Algaecide Solution Strength (%)	Wastewater Flowrate (gpm)	Application Rate (lb/day)	Chemical Pumping Rate (gal/hr)	Chemical Pumping Rate (gal/day)	lbs. of Algaecide Required/Month	gal. of Algaecide Required/Month	Number of Drums/Year (55-gal)
20	9.10	100	700	168.3	0.8	18	5,048	555	121
25	9.10	100	700	210.3	1.0	23	6,310	693	151
30	9.10	100	700	252.4	1.2	28	7,571	832	182

Wastewater Flow Rate = 2,000 gpm

Algaecide Dosage (mg/L)	Algaecide Density (lb/gal)	Algaecide Solution Strength (%)	Wastewater Flowrate (gpm)	Application Rate (lb/day)	Chemical Pumping Rate (gal/hr)	Chemical Pumping Rate (gal/day)	lbs. of Algaecide Required/Month	gal. of Algaecide Required/Month	Number of Drums/Year (55-gal)
20	9.10	100	2,000	480.7	2.2	53	14,422	1,585	346
25	9.10	100	2,000	600.9	2.8	66	18,027	1,981	432
30	9.10	100	2,000	721.1	3.3	79	21,633	2,377	519

by 69 JB 7/27/01 CF 10/27/01

by EG 7/26/01
ck: JB 7/27/01

Data Sheet

Series G, Model B
Mechanical Metering Pumps

Configuration Data

Model G51 8 - 541P

Output Code[1]

G51 ..... 26 GPH @ 60 Hz (82 l/h @ 50 Hz) .... 150 psi (10.0 Bar)
G52 ..... 53 GPH @ 60 Hz (167 l/h @ 50 Hz) .... 150 psi (10.0 Bar)
G53 ..... 106 GPH @ 60 Hz (334 l/h @ 50 Hz) .... 150 psi (10.0 Bar)
G58[2] ..... (418 l/h @ 50 Hz) ..... (10.0 Bar)
G63 ..... 147 GPH @ 60 Hz (464 l/h @ 50 Hz) .... 100 psi (7.0 Bar)
G68[2] ..... (580 l/h @ 50 Hz) ..... (7.0 Bar)
G73 ..... 300 GPH @ 60 Hz (946 l/h @ 50 Hz) ..... 50 psi .. (3.5 Bar)
G78[2] ..... (1183 l/h @ 50 Hz) ..... (3.5 Bar)

Motor

8 ..... 3/4 hp, 1-Phase, 60 Hz, 115/230 V, 1800 rpm, TEFC, 56C Frame
K ..... 0.55 kW, 3-Phase, 50 Hz, 220/380 V, 1500 rpm, TEFC, F165 Flange, 80 Frame
J ..... 3/4 hp, 3-Phase, 60 Hz, 230/460 V, 1800 rpm, TEFC, 56C Frame
H ..... AC Variable Speed Motor, 1 hp, 3-Phase, 230 V,50/60 Hz
P ..... DC Variable Speed Motor,1 hp, 1-Phase, 120 V, 50/60 Hz
N ..... No Motor (IEC 80 Frame, F165 Flange)
X ..... No Motor (56C Frame)

Liquid End

See next page for complete liquid end specifications and selection.

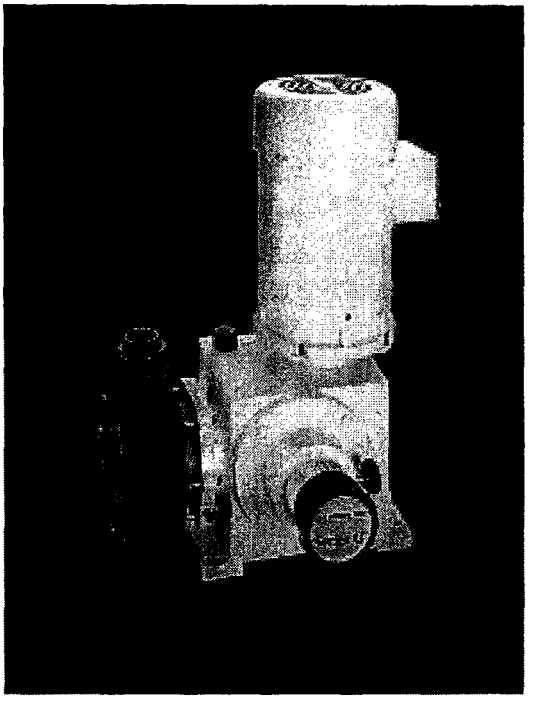

Specifications

Series	Capacity[1] (per Hour) Gallons @ 60 Hz	Capacity[1] (per Hour) Liters @50 Hz	Strokes per Minute 60 Hz	Strokes per Minute 50 Hz	Maximum Injection Pressure	Stroke Length (Adjustable) Recommended Minimum	Shipping Weight
G51	26	82	43	36	150 psi (10 Bar)	0 - 100% (Minimum 10%)	88 lbs (40 kg)[3]
G52	53	167	86	72	150 psi (10 Bar)		
G53	106	334	173	144	150 psi (10 Bar)		
G58[2]	—	418	—	180	— (10 Bar)		
G63	147	464	173	144	100 psi (7 Bar)		
G68[2]	—	580	—	180	— (7 Bar)		
G73	300	946	173	144	50 psi (3.5 Bar)		
G78[2]	—	1183	—	180	— (3.5 Bar)		

(1) Outputs are at maximum rated pressure. At reduced pressures add 1% per 25 psi (1.7 Bar)
(2) Available only with 50 Hz motor
(3) 106 lbs (48 kg) with stainless steel liquid end

LMI MILTON ROY
8 Post Office Square
Acton, MA 01720 USA
TEL: (978) 263-9800
FAX: (978) 264-9172
http://www.lmipumps.com

Replaces same of Rev. B 1/98
1791.C 12/99

by EG 7/26/01
CK JB 7/27/01

Configuration Data & Materials of Construction

Drive Assembly	Liquid End No.	Size Code	Head / Fittings	Materials of Construction: Valve Balls	Diaphragm	Valve Seat	Seals	Connections: Inch	Metric
	541P	40	Polypropylene/PVC	Glass	PTFE	PE	Viton®	1/2" NPT F	
	541Q	40	Polypropylene/PVC	Glass	PTFE	PE	Viton®		DN15
G51 ▣ –	542P	40	PVDF	Ceramic	PTFE	PVDF	PTFE	1/2" NPT F	
G52 ▣ –	542N	40	PVDF	Ceramic	PTFE	PVDF	PTFE		1/2" BSP F
G53 ▣ –	547P	40	316 SS	316 SS	PTFE	316 SS	Viton®	1/2" NPT F	
G58 ▣ –	547N	40	316 SS	316 SS	PTFE	316 SS	Viton®		1/2" BSP F
	548P	40	PVC	Glass	PTFE	PE	Viton®	1/2" NPT F	
	548Q	40	PVC	Glass	PTFE	PE	Viton®		DN15
	561P	60	Polypropylene/PVC	PVC	PTFE	PE	Viton®	1" NPT F	
	561Q	60	Polypropylene/PVC	PVC	PTFE	PE	Viton®		DN25
	562P	60	PVDF	Ceramic	PTFE	PVDF	PTFE	1" NPT F	
G63 ▣ –	562N	60	PVDF	Ceramic	PTFE	PVDF	PTFE		1" BSP F
G68 ▣ –	567P	60	316 SS	316 SS	PTFE	316 SS	PTFE	1" NPT M	
	567N	60	316 SS	316 SS	PTFE	316 SS	PTFE		1" BSP M
	568P	60	PVC	PVC	PTFE	PE	Viton®	1" NPT F	
	568Q	60	PVC	PVC	PTFE	PE	Viton®		DN25
	581P	80	Polypropylene/PVC	PVC	PTFE	PE	Viton®	1" NPT F	
	581Q	80	Polypropylene/PVC	PVC	PTFE	PE	Viton®		DN25
	582P	80	PVDF	Ceramic	PTFE	PVDF	PTFE	1" NPT F	
G73 ▣ –	582N	80	PVDF	Ceramic	PTFE	PVDF	PTFE		1" BSP F
G78 ▣ –	587P	80	316 SS	316 SS	PTFE	316 SS	PTFE	1" NPT M	
	587N	80	316 SS	316 SS	PTFE	316 SS	PTFE		1" BSP M
	588P	80	PVC	PVC	PTFE	PE	Viton®	1" NPT F	
	588Q	80	PVC	PVC	PTFE	PE	Viton®		DN25

▣ See front page for voltage code specifications.

Viton is a registered trademark of E. I. du Pont de Nemours & Co., Inc.

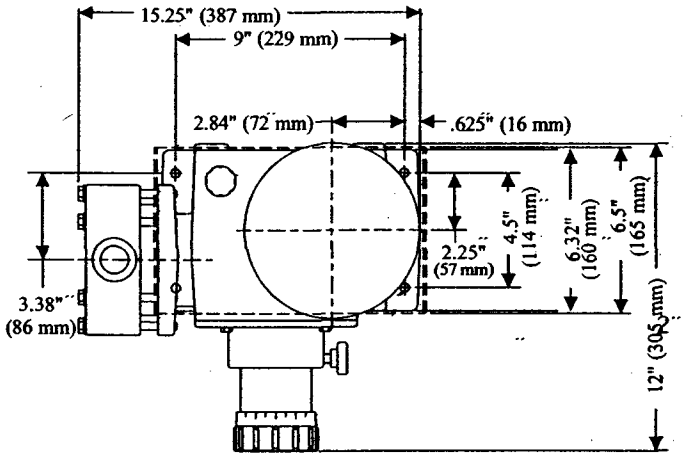

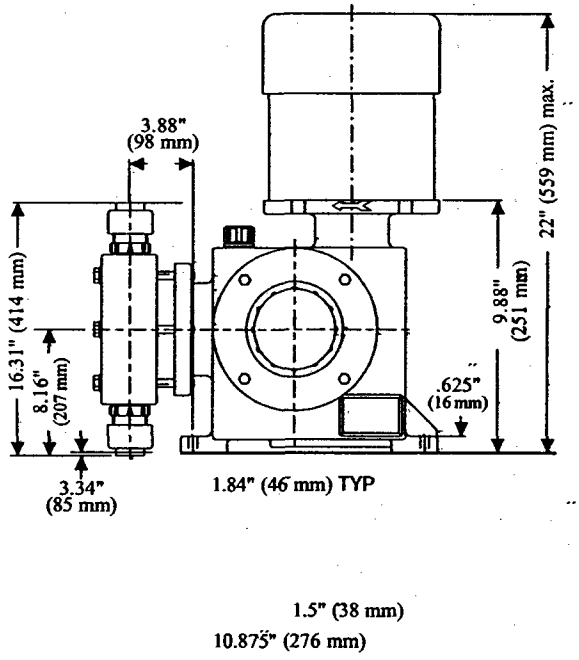

© 1999 LMI Milton Roy - All Rights Reserved
Printed in USA
Specifications subject to change without notice.

by EG 7/26/01
ck JB 7/27/01

13 of 16

Data Sheet

Series C

Electronic Metering Pumps

Configuration Data

Model C92 1 - 363SI

Control & Output Code
Manual Control
Speed (stroking frequency) and stroke length manually adjustable.
C10 — 1.3 GPH (4.9 l/h) ... 300 psi (20.7 Bar)
C11 — 2.5 GPH (9.5 l/h) ... 150 psi (10.3 Bar)
C12 — 4.0 GPH (15.1 l/h) ... 100 psi (6.9 Bar)
C13 — 8.0 GPH (30 l/h) ..... 60 psi (4.1 Bar)
C14 — 20 GPH (76 l/h) ..... 25 psi (1.7 Bar)
Instrument Responsive/Manual Control
Manual adjustment features of C1 Series plus switch conversion to external control for automatic systems.
C70 — 1.3 GPH (4.9 l/h) ... 300 psi (20.7 Bar)
C71 — 2.5 GPH (9.5 l/h) ... 150 psi (10.3 Bar)
C72 — 4.0 GPH (15.1 l/h) ... 100 psi (6.9 Bar)
C73 — 8.0 GPH (30 l/h) ..... 60 psi (4.1 Bar)
C74 — 20 GPH (76 l/h) ..... 25 psi (1.7 Bar)
C77 — 10 GPH (38 l/h) ..... 80 psi (5.5 Bar)
C78 — 25 GPH (95 l/h) ..... 30 psi (2.07 Bar)
C90 — 1.3 GPH (4.9 l/h) ... 300 psi (20.7 Bar)
C91 — 2.5 GPH (9.5 l/h) ... 150 psi (10.3 Bar)
C92 — 4.0 GPH (15.1 l/h) ... 100 psi (6.9 Bar)
C93 — 8.0 GPH (30 l/h) ..... 60 psi (4.1 Bar)
C94 — 20 GPH (76 l/h) ..... 25 psi (1.7 Bar)

Voltage Code
1 —— 120 VAC US Plug
2 —— 240 VAC US Plug
3 —— 220-240 VAC DIN Plug
5 —— 240-250 VAC, UK Plug
6 —— 240-250 VAC, AUST/NZ Plug
7 —— 220-240 VAC, SWISS Plug

Liquid End
See next page for complete liquid end specifications and selection.

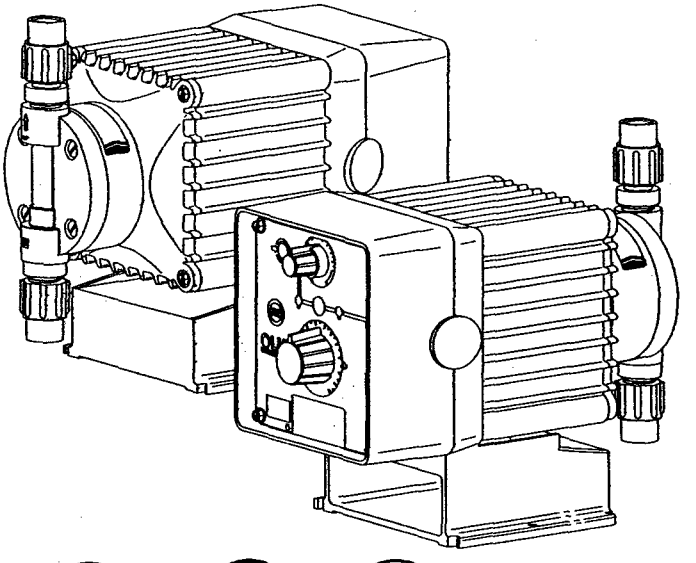

Dimensions

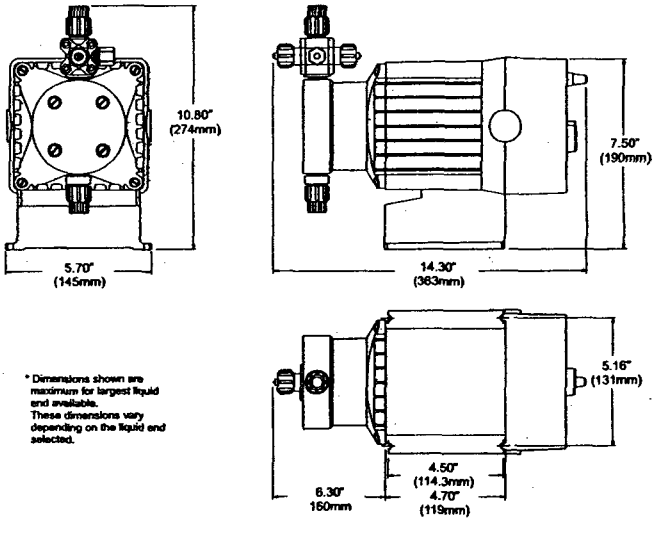

* Dimensions shown are maximum for largest liquid end available. These dimensions vary depending on the liquid end selected.

Specifications

Series	Strokes Per Minute (Adjustable) Min	Max	Stroke Length (Adjustable) Recommended Minimum	Average Input Power @ Max Speed	Shipping Weight
C10, C70, C90 C11, C71, C91 C12, C72, C92 C13, C73, C93 C14, C74, C94	1	100	10%	44 watts	20 lbs (9.1 kg)
C77 C78	1	100	10%	87 watts	28 lbs (12.7 kg)

LMI MILTON ROY
8 Post Office Square
Acton, MA 01720 USA
TEL: (978) 263-9800
FAX: (978) 264-9172
http://www.lmipumps.com

Replaces same of Rev.C 9/97
1712.D 10/99

by EG 7/26/01
Ck: JB 7/27/01

Configuration Data & Materials of Construction

Drive Assembly	Liquid End No.	Size Code	Materials of Construction: Head & Fittings	Balls	Liquifram™	Seal Ring	Accessory	Tubing & Connections: Discharge	Suction
C90 ▨ -									
C70 ▨ -	297	0.9	316 S.S.	316 S.S.	Fluorofilm™	316 S.S.		Pipe 1/4" NPT M	
C10 ▨ -	94S**	0.9	PVC	Ceramic	Fluorofilm™	PTFE	4FV	Pipe 1/4" NPT M	
	360SI †	1.8	Acrylic/PGC	Ceramic	Fluorofilm™	PGC / Polyprel®	4FV	PE .375" O.D.	
	361SI †	1.8	PGC/PGC	Ceramic	Fluorofilm™	PGC / Polyprel®	4FV	PE .375" O.D.	
C91 ▨ -	362SI †	1.8	PVDF / PVDF	Ceramic	Fluorofilm™	PVDF/ Polyprel®	4FV	PE .375" O.D.	
C92 ▨ -	363SI †	1.8	PVDF / PVDF	Ceramic	Fluorofilm™	PVDF/ PTFE	4FV	PE .375" O.D.	
C71 ▨ -	277	1.8	316 S.S.	316 S.S.	Fluorofilm™	316 S.S.		Pipe 1/4" NPT M	
C72 ▨ -	71FS	1.8	Acrylic/PVDF	PTFE	Hypalon®	Hypalon®	4FV	PE .5" O.D.	Vinyl .5" O.D.
C11 ▨ -	71S †	1.8	Acrylic/PVC	Ceramic	Fluorofilm™	PTFE	4FV	PE .5" O.D.	Vinyl .5" O.D.
C12 ▨ -	72S †	1.8	PVC	Ceramic	Fluorofilm™	PTFE	4FV	PE .5" O.D.	
	74S**	1.8	PVC	Ceramic	Fluorofilm™	PTFE	4FV	Pipe 1/4" NPT M	
	75HV	1.8	Polypropylene	316 S.S.	Fluorofilm™	PTFE		PE .5" O.D.	Vinyl .938" O.D.
	75S †	1.8	Polypropylene	Ceramic	Fluorofilm™	PTFE	4FV	PE .5" O.D.	
	76	1.8	Acrylic/PP	316 S.S.	Fluorofilm™	Hypalon®		PE .5" O.D.	Vinyl .938" O.D.
	79	1.8	UHMW PE	Ceramic	Hypalon®	Hypalon®		PE .5" O.D.	Vinyl .5" O.D.
	310SI †	3.0	Acrylic/PGC	Ceramic	Fluorofilm™	PGC / Polyprel®	4FV	PE .375" O.D.	
	311SI †	3.0	PGC/PGC	Ceramic	Fluorofilm™	PGC / Polyprel®	4FV	PE .375" O.D.	
	312SI †	3.0	PVDF / PVDF	Ceramic	Fluorofilm™	PVDF/ Polyprel®	4FV	PE .375" O.D.	
C93 ▨ -	313SI †	3.0	PVDF / PVDF	Ceramic	Fluorofilm™	PVDF / PTFE	4FV	PE .375" O.D.	
C73 ▨ -	20HV	3.0	Acrylic/PP	316 S.S.	Fluorofilm™	Hypalon®		PE .5" O.D.	Vinyl .938" O.D.
C13 ▨ -	20S**	3.0	Acrylic/PVC	Ceramic	Fluorofilm™	Hypalon®	4FV	PE .5" O.D.	Vinyl .5" O.D.
	24	3.0	PVC	Ceramic	Fluorofilm™	PTFE		Pipe 1/2" NPT M	
	25HV	3.0	Polypropylene	316 S.S.	Fluorofilm™	PTFE		PE .5" O.D.	Vinyl .938" O.D.
	25P	3.0	Polypropylene	Ceramic	Fluorofilm™	PTFE		Pipe 1/2" NPT M	
	25T	3.0	Polypropylene	Ceramic	Fluorofilm™	PTFE		PE .5" O.D.	
	26S**	3.0	PVC	Ceramic	Fluorofilm™	Viton®	4FV	PE .5" O.D.	
	27	3.0	316 S.S.	316 S.S.	Fluorofilm™	PTFE		Pipe 1/2" NPT M	
	29	3.0	UHMW PE	Ceramic	Fluorofilm™	Hypalon®		PE .5" O.D.	
	30	6.0	Acrylic/PVC	Ceramic	Fluorofilm™	PTFE		PE .5" O.D	Vinyl .5" O.D.
C94 ▨ -	32	6.0	PVDF	Ceramic	Fluorofilm™	PTFE		PE .5" O.D.	
C78 ▨ -	34	6.0	PVC	Ceramic	Fluorofilm™	PTFE		Pipe 1/2" NPT M	
C74 ▨ -	35P	6.0	Polypropylene	Ceramic	Fluorofilm™	PTFE		Pipe 1/2" NPT M	
C14 ▨ -	35T	6.0	Polypropylene	Ceramic	Fluorofilm™	PTFE		PE .5" O.D.	
	36	6.0	PVC	Ceramic	Fluorofilm™	PTFE		PE .5" O.D.	
	37	6.0	316 S.S.	316 S.S.	Fluorofilm™	PTFE		Pipe 1/2" NPT M	
	20HV	3.0	Acrylic/PP	316 S.S.	Fluorofilm™	Hypalon®		PE .5" O.D.	Vinyl .938" O.D.
	20S**	3.0	Acrylic/PVC	Ceramic	Fluorofilm™	Hypalon®	4FV	PE .5" O.D.	Vinyl .5" O.D.
	24	3.0	PVC	Ceramic	Fluorofilm™	PTFE		Pipe 1/2" NPT M	
C77 ▨ -	25HV	3.0	Polypropylene	316 S.S.	Fluorofilm™	PTFE		PE .5" O.D.	Vinyl .938" O.D.
	25P	3.0	Polypropylene	Ceramic	Fluorofilm™	PTFE		Pipe 1/2" NPT M	
	25T	3.0	Polypropylene	Ceramic	Fluorofilm™	PTFE		PE .5" O.D.	
	26S**	3.0	PVC	Ceramic	Fluorofilm™	Viton®	4FV	PE .5" O.D.	
	27	3.0	316 S.S.	316 S.S.	Fluorofilm™	PTFE		Pipe 1/2" NPT M	
	29	3.0	UHMW PE	Ceramic	Fluorofilm™	Hypalon®		PE .5" O.D.	

▨ See front page for voltage code specifications.

** These Liquid Ends are available without a 4FV, simply drop the 'S' at the end of the Liquid End number to order the model without a 4FV.

† To specify ¼" NPT male, change 'I' to 'P'. To specify black, UV resistant tubing, change 'I' to 'U'. To specify Bleed 4FV, change 'S' to 'B'. To specify 3FV, change 'S' to'T'.
Fluorofilm™ is a copolymer of PTFE and PFA.
Polyprel® is an elastomeric PTFE copolymer.

4FV indicates that the pump is equipped with an LMI Four Function Valve. This diaphragm type anti-syphon/pressure relief valve is installed on the pump head. It provides anti-syphon protection and aids in priming, even under pressure.

Output Information

Series	Gallons per Hour Min	Max	Liters per Hour Min	Max	mL/cc per Minute Min	Max	mL/cc per Stroke Min	Max	Maximum Injection Pressure	
C10, C70*, C90*	0.001	1.3	0.005	4.9	0.08	82	0.08	0.82	300 psi	(20.7 Bar)
C11, C71*, C91*	0.003	2.5	0.010	9.5	0.16	158	0.16	1.58	150 psi	(10.3 Bar)
C12, C72*, C92*	0.004	4.0	0.015	15.1	0.25	252	0.25	2.52	100 psi	(6.9 Bar)
C13, C73*, C93*	0.008	8.0	0.030	30	0.51	505	0.51	5.05	60 psi	(4.1 Bar)
C14, C74*, C94*	0.020	20.0	0.076	76	1.26	1262	1.26	12.62	25 psi	(1.7 Bar)
C77*	0.010	10.0	0.038	38	0.63	631	0.63	6.31	80 psi	(5.5 Bar)
C78*	0.025	25.0	0.095	95	1.58	1577	1.58	15.77	30 psi	(2.07 Bar)

* Minimum output is based on 1 stroke per minute and 10% stroke setting, minimum output can be reduced further in external mode. Series C9 pumps may be programmed for strokes per hour for lower outputs.

© 1999 LMI Milton Roy - All Rights Reserved
Printed in USA
Specifications subject to change without notice.

Polyprel is a registered trademark of Liquid Metronics Incorporated.
Flourofilm and Liquifram are trademarks of Liquid Metronics Incorporated.
Hypalon and Viton are registered trademarks of E. I. du Pont de Nemours & Co., Inc.

by EG 7/26/01
ck JB 7/27/01

Specification Sheet

Series C

GENERAL

Chemical metering pumps shall be positive displacement, Liquifram™ type pumps that are UL and CUL approved. Output volume shall be adjustable while pumps are in operation from zero to maximum capacity of:

C10, C70, C90	-	1.3 GPH (4.9 liters per hour)
C11, C71, C91	-	2.5 GPH (9.5 liters per hour)
C12, C72, C92	-	4.0 GPH (15.1 liters per hour)
C13, C73, C93	-	8.0 GPH (30.0 liters per hour)
C14, C74, C94	-	20.0 GPH (76.0 liters per hour)
C77	-	10.0 GPH (38.0 liters per hour)
C78	-	25.0 GPH (95.0 liters per hour)

Chemical metering pumps shall be capable, without a hydraulically backed diaphragm, of injecting solutions against pressures up to:

C10, C70, C90	-	300 psig (20.7 bar)
C11, C71, C91	-	150 psig (10.3 bar)
C12, C72, C92	-	100 psig (6.9 bar)
C13, C73, C93	-	60 psig (4.1 bar)
C14, C74, C94	-	25 psig (1.7 bar)
C77	-	80 psig (5.5 bar)
C78	-	30 psig (2.1 bar)

SERIES C1

Adjustment shall be by means of readily accessible dial knobs, one for changing stroke length and the other for changing stroke frequency (speed). Both knobs are to be located opposite the liquid handling end.

SERIES C7

Control of Series C7 metering pumps shall be selectable between internal and external pulsing by means of a 3-position center-off switch. Stroke length shall be adjustable by means of readily accessible dial knob. When in external pulsed mode, Series C7 units shall accept signals without the use of electrical timer or internal timer. Pressure capacity shall be adjustable to reduce noise, vibration and wear.

SERIES C9

Series C9 metering pumps shall have a clear liquid crystal display. Control shall be selectable between internal and external pulsing by means of a tactile keypad. Internal stroke frequency shall be adjustable from 1 stroke per hour to 100 strokes per minute. Pressure capacity shall be keypad adjustable to reduce noise, vibration and wear. Metering pump shall be capable of dividing or multiplying pulse inputs from 1 to 999 or responding directly or inversely to a 4-20mA input signal.

DRIVE

The pump drive shall be totally enclosed with no exposed moving parts. Solid state electronic pulser shall be encapsulated and supplied with quick connect terminals at least 3/16" (4.75 mm) wide. Electronics shall be housed in chemical resistant enclosure at the rear of the pump for maximum protection against chemical spillage. Electrical power consumption shall not exceed 87 watts under full speed and maximum pressure conditions. Pump weight shall not exceed 28 lbs (12.7 kg).

AUTOMATIC PRESSURE RELIEF

To eliminate need for pressure relief valve, Liquifram™ shall automatically stop pulsating when discharge pressure exceeds pump pressure rating by not more than 35%.

MATERIAL

Chemical metering pump housing shall be of chemically resistant glass fiber reinforced thermoplastic with a glass fiber reinforced polypropylene EPU carrier[1]. All exposed fasteners shall be stainless steel. Chemical metering pump valves shall be ball type, with ceramic balls[2]. Valve seat and seal ring shall be renewable by replacing the combination seat-seal ring[3] or cartridge valve assembly. Pump head shall be of transparent acrylic[4] material capable of resisting the pumped chemical. Fittings and connections at pump head shall be PVC[5].

CHECK VALVES AND TUBING

A total of 16 ft (4.8 m) of polyethylene tubing[6] shall be provided per pump complete with compression connections. A foot valve with integral one piece strainer shall be provided for the suction line, and an injection check/back pressure valve with ½" NPT male connection for the injection point. The injection check valve shall incorporate a dilating orifice which prohibits scale formation and accumulation of crystalline deposits.

Notes:

1. With plastic coated cast iron EPU carrier for Series C77 and C78.
2. Type 316 stainless steel or PTFE may be specified.
3. Hypalon®, PTFE, Viton® or Polyprel® may be specified
4. PVC, polypropylene, or Type 316 stainless steel may be specified.
5. PVDF, Polypropylene, or Type 316 stainless steel may be specified.
6. 6 ft. (1.8 m) of vinyl suction tubing may be specified in place of polyethylene for the suction side only. 1/4" or 1/2" male pipe thread may be specified.

LMI
MILTON ROY

8 Post Office Square
Acton, MA 01720 USA
TEL: (978) 263-9800
FAX: (978) 264-9172
http://www.lmipumps.com

ISO9001

Replaces same of Rev. B 8/97
1619. C 12/99

by EG 7/26/01
ck: JB 7/27/01

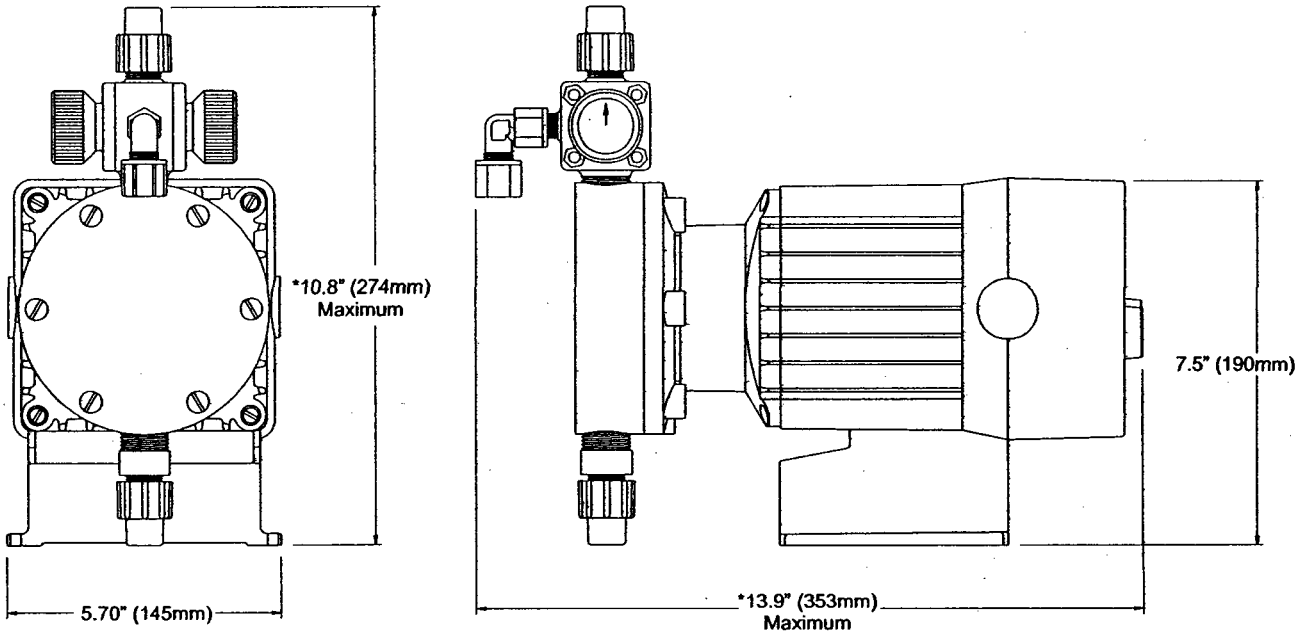

*Dimensions shown are maximum for largest liquid end available.These dimensions vary depending on the liquid end selected.

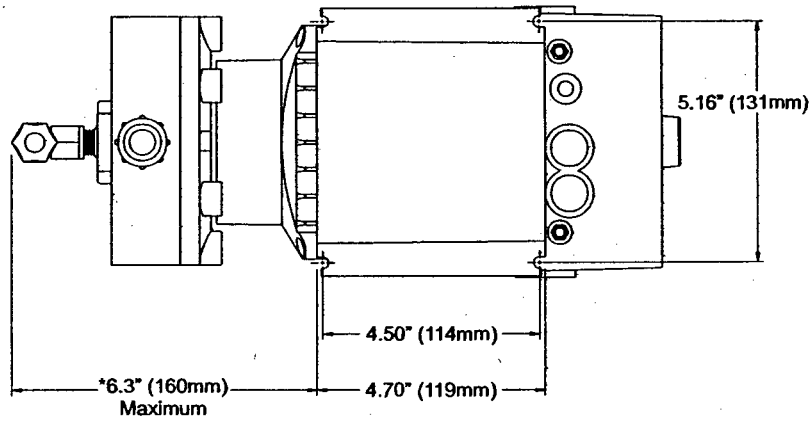

© 1999 LMI Milton Roy - All Rights Reserved
Printed in USA
Specifications subject to change without notice.

Polyprel is a registered trademark of Liquid Metronics Incorporated.
Liquifram, Liquitron, Micropace are trademarks of Liquid Metronics Incorporated.
Hypalon and Viton are registered trademarks of E. I. du Pont de Nemours & Co., Inc.

CALCULATION COVER SHEET

PROJECT New Bedford Harbor Superfund Site OU#1

SUBJECT Sand Filtration System (SF-301/SF-302) Sizing

CLIENT U.S. Army Corps of Engineers – New England District (USACE – NED)

CALCULATION NO. P-11 PROJECT NO. 5197.1720.3392

NO OF SHEETS 9 DESIGN LEVEL _____

CALCULATION BY OTHERS _____ YES X NO

PREPARER E. Griffin

REVIEWED BY [signature] DATE 10-30-01

ASSUMPTIONS THAT REQUIRE CONFIRMATION _____ YES X NO

ASSUMPTIONS CONFIRMED BY _____ DATE _____

PRINT NAME, DATE AND INITIAL

Rev No	Affected Sheets	Prepared by Date	Checked by Date	Verified by Date

FOSTER WHEELER ENVIRONMENTAL CORPORATION

BY CEO DATE 10/17/01 SHEET 2 OF 9

CHKD. BY JB DATE 10/18/01 OFS NO. DEPT. NO.

CLIENT USACE

PROJECT New Bedford Harbor Superfund Site

SUBJECT Sand Filtration System

GIVEN: Vortisand high efficiency filtration system A12-30-SP
Two banks of 6 vessels (12 units)
Diameter = 30 inches
Area = 4.91 ft^2
Capacity = 20 gpm/ft^2 / vessel

ASSUME: Flow rate = 1000 gpm
For Q = 2000 gpm, would use 2 systems (4 banks)

CALCULATE:

A. Twelve (12) active vessels:

1. Q = 1000 gpm / 12 vessels = **83 gpm/vessel**

2. Loading rate = Q/A = 83 gpm / 4.91 ft^2 = **16.9 gpm/ft^2**

B. Eleven (11) active vessels, one (1) standby/backwash:

1. Q = 1000 gpm / 11 vessels = **91 gpm/vessel**

2. Loading rate = Q/A = 91 gpm / 4.91 ft^2 = **18.5 gpm/ft^2**

by GE 10/17/01

3/7

VORTISAND®

CC: JB 11/15/01

ADVANCED TECHNOLOGY SERVING THE ENVIRONMENT

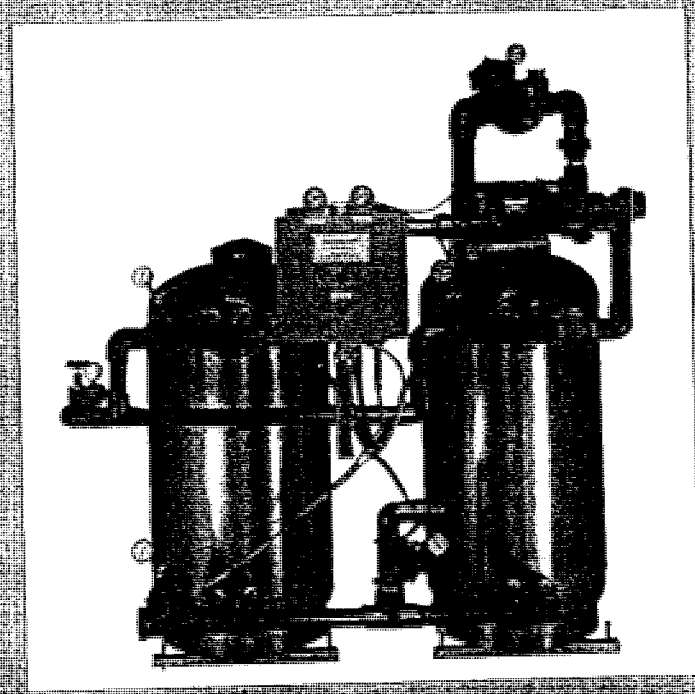

VORTISAND® 0,45 MICRON FILTER

FILTRATION SENSITIVITY: 0,45 MICRON
2 MICRON
5 MICRON
10 MICRON

HIGH PERFORMANCE, FULLY AUTOMATED FILTERS

Once installed, VORTISAND® filters need no attention during backwash and rinse cycles, yet they provide outstanding advantages:

- **Exceptionally efficient filtration, with no clogging**
- **Longer filtration cycle than conventional filters**
- **Lower water consumption during backwashing**
- **Filtration capacity up to 17 gpm/sq. ft., 4 times greater than conventional filters**
- **Filtration flow: 8 to 1,200 USgpm**
- **Compact configuration for optimal space utilization**
- **Long-life stainless steel tank**

SIMPLE, EFFICIENT OPERATING PRINCIPLE

VORTISAND® filters have proven themselves for more than 15 years and are the result of many years of research and development which today provides filtration 10 to 20 times finer than that of sand filters now available on the market. Designed for 0.45, 2, 5 and 10 micron filtration, their high performance is due to a unique concept which ingeniously combines centrifugal separation and sand filtration.

Using centrifugal force (a vortex effect) to whirl the raw water above the filtering medium (sand) helps remove solid contaminants (fine suspension) and significantly increases the effective filter surface within the tank. The turbulence caused by sustained cleaning action which forces the suspended particles to accumulate on the inside walls of the tank, so much finer sand can be used without any clogging problems. The water, now largely free of impurities, is filtered through the media and subsequently collected and used for a variety of purposes. The contaminants remaining above the sand are removed during backwashing, which also requires less water and a shorter operating time than with conventional sand filtering systems. The process therefore allows longer cycles and much finer filtration levels (0.45 microns vs. 10 micron and up).

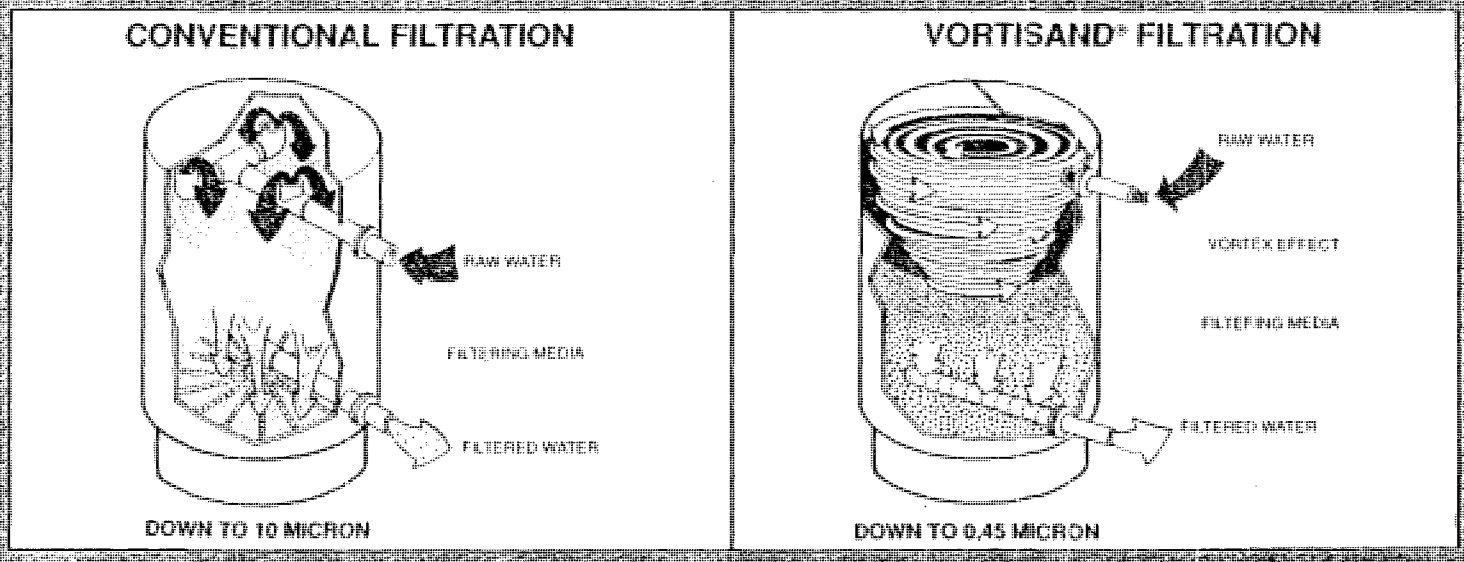

bg 5# 10/7/01
CZ JB 10/10/01

VORTISAND®

0.45 - 2 - 5 or 10 MICRON

VARIABLE & CONSTANT FLOW

MODEL	INSTALLATION SPACE REQUIRED FOR VARIABLE FLOW (V) AND CONSTANT FLOW (C) LENGTH x HEIGHT x DEPTH	OPERATING FLOWRATE USGPM				FLOW REQUIRED FOR BACKWASH PER VESSEL				MOTOR HP				WEIGHT APPROX
		FILTRATION / BACKWASH				BACKWASH GPM 5 MINUTES / RINSE GPM 1 MINUTE				CONNECTIONS IN INCHES				
	CAST IRON VALVES[1]	0.45	2	5	10	0.45	2	5	10	0.45	2	5	10	lbs
AIFP-12	(V) 25"x34"x21" (C) 25"x34"x21"	8	12	16		9	9	9		0.33	0.33	0.33		200
AIFP-16	(V) [illegible] (C) [illegible]	18	24	30		17	17	17		0.5	0.5	0.5		[illegible]
AIFP-21	(V) [illegible] (C) [illegible]	15	18	21		25	25	25		1.0	1.5	1.5		500
A-30	(V) [illegible] (C) [illegible]	47	53	60	70	25	25	25	25	1.0	1.0	1.0		[illegible]
A-40	(V) [illegible] (C) [illegible]	84	95	120	135	25	25	25	25	2.0	2.0	2.0	2.0	[illegible]
A-50	(V) [illegible] (C) [illegible]	117	150	180	210	25	25	25	25	3.0	3.0	3.0		[illegible]
M-20	(V) [illegible] (C) [illegible]	180	215	240	270	25	25	25	25	3.0	3.0	3.0	3.0	[illegible]
	(V) [illegible] (C) [illegible]	235	285	300	350	25	25	25	25	3.0	3.0	3.0	3.0	[illegible]
M-30	(V) [illegible] (C) [illegible]	270	315	360	405	25	25	25	25	3.0	3.0	3.0	3.0	[illegible]
	(V) [illegible] (C) [illegible]	350	415	480	540	25	25	25	25	3.0	3.0	3.0	3.0	[illegible]
M-40	(V) [illegible] (C) [illegible]	450	500	600	700	25	25	25	25	3.0	3.0	3.0	3.0	[illegible]
	(V) [illegible] (C) [illegible]	575	675	800	900	25	25	25	25	3.0	3.0	3.0	3.0	[illegible]
M-50	(V) [illegible] (C) [illegible]	700	840	1000	1200	25	25	25	25	3.0	3.0	3.0	3.0	[illegible]
	(V) [illegible] (C) [illegible]	875	1050	1250	1500	25	25	25	25	3.0	3.0	3.0	3.0	[illegible]
M-60	(V) [illegible] (C) [illegible]	1050	1260	1500	1800	25	25	25	25	3.0	3.0	3.0	3.0	[illegible]
	(V) [illegible] (C) [illegible]	1225	1470	1750	2100	25	25	25	25	3.0	3.0	3.0	3.0	[illegible]
M-70	(V) [illegible] (C) [illegible]	1400	1680	2000	2400	25	25	25	25	3.0	3.0	3.0	3.0	[illegible]
	(V) [illegible] (C) [illegible]	1575	1890	2250	2700	25	25	25	25	3.0	3.0	3.0	3.0	[illegible]
M-80	(V) [illegible] (C) [illegible]	1750	2100	2500	3000	25	25	25	25	3.0	3.0	3.0	3.0	[illegible]
	(V) [illegible] (C) [illegible]	1925	2310	2750	3300	25	25	25	25	3.0	3.0	3.0	3.0	[illegible]
M-90	(V) [illegible] (C) [illegible]	2100	2520	3000	3600	25	25	25	25	3.0	3.0	3.0	3.0	[illegible]
	(V) [illegible] (C) [illegible]	2275	2730	3250	3900	25	25	25	25	3.0	3.0	3.0	3.0	[illegible]
M-100	(V) [illegible] (C) [illegible]	2450	2940	3500	4200	25	25	25	25	3.0	3.0	3.0	3.0	[illegible]
	(V) [illegible] (C) [illegible]	2625	3150	3750	4500	25	25	25	25	3.0	3.0	3.0	3.0	[illegible]
M-110	(V) [illegible] (C) [illegible]	2800	3360	4000	4800	25	25	25	25	3.0	3.0	3.0	3.0	[illegible]
	(V) [illegible] (C) [illegible]	2975	3570	4250	5100	25	25	25	25	3.0	3.0	3.0	3.0	[illegible]
M-120	(V) [illegible] (C) [illegible]	3150	3780	4500	5400	25	25	25	25	3.0	3.0	3.0	3.0	[illegible]
	(V) [illegible] (C) [illegible]	3325	3990	4750	5700	25	25	25	25	3.0	3.0	3.0	3.0	[illegible]
M-130	(V) [illegible] (C) [illegible]	3500	4200	5000	6000	25	25	25	25	3.0	3.0	3.0	3.0	[illegible]
	(V) [illegible] (C) [illegible]	3675	4410	5250	6300	25	25	25	25	3.0	3.0	3.0	3.0	[illegible]

VORTISAND® variable flow filters are specially designed to maintain efficient filtration levels despite sudden and frequent fluctuations in feed water flow.

VORTISAND® constant flow filters are designed for applications requiring a constant flow of feed water to maintain optimal filtration efficiency. The feed water should not drop below 50% of the filtration rate. The filters remove suspended particles, organic and inorganic matter.

[1] For poly plastic valves, dimensions are different.

Standard system comes with 304 stainless steel vessel and PVC Sch. 80 piping.

AIFP system comes with fiberglass vessel and PVC Sch. 80 piping.

LEGEND: A1-20

- vessel diameter in inches
- number of vessels

Please consult your representative for more information.

The manufacturer reserves the right to make changes without notice.

VORTISAND®

A MULTITUDE OF APPLICATIONS!

POTABLE WATER:

- Filtration before disinfection (to 0.45 micron)
- Removal of turbidity and suspended matter in water
- Lower Silt Density Index

FILTRATION:

- Filtration (2 micron) for:
  - Public swimming pools
  - Aquariums
  - Waterslides
  - Aquaculture (fish breeding)

WASTE WATER:

- Tertiary treatment after clarification to remove suspended solids
- Pretreatment before disinfection and ultraviolet light sterilization
- Treatment after settling basin or decantor
- Removal of suspended heavy metals (up to 0.45 micron)
- Pretreatment before metal recovery system (Ex.: VITROKELL electrolytic cell, ion exchange)

ULTRAPURE WATER:

- Prefiltration to remove suspended solids, reducing or eliminating need for cartridges
- Reduction in Silt Density Index readings
- Prefiltration for reverse osmosis, ion exchange systems, activated carbon and softeners

INDUSTRIAL APPLICATIONS:

- Filtration of process water (to 0.45 micron)
- Cooling towers (5 micron)
- Cooling water for pumps, turbines, etc.
- Wash water (filtration)
- Dilution water

Sonitec

85 Sargeant St., Holyoke, Massachusetts 01040
Tel.: (415) 532-6089 — Fax: (413) 534-5893

by EG 10/17/01

VORTISAND

ck SB 10/18/01

SPECIFICATIONS

Proposal #3103

7/c

HARBOR WATER APPLICATION

MODEL A12-30-SP / 2 banks of 6 vessels

	DESCRIPTION	SPECIFICATIONS		
A	System Media Sizing	2	µm	Nominal
B	Number of vessels	12	units	
C	Vessel Diameter & Height	30" ϕ x 55 " H		
D	Filtration Flow	1 200	gpm	
F	Filtration Capacity during Backwash	1 100	gpm	
G	Gallons required per tank for rinse	75	gpm	For 1 minute
H	Backwash Flowrate (per vessel)	45	gpm	Min. 30 psi Max. 100 psi
I	Backwash Duration	5	Minutes	
J	Vessels construction	SS 304, Built according to ASME, Sec.VIII Div.1 (125 psig)		
K	Underdrain	PVC Non fouling High Efficiency		
L	Valves	Aquamatic cast iron body / Diaphragm type		
M	Face Piping & Fittings	PVC Schedule 80		
N	Centrifugal Filter Pump	Cast iron body - Centrifugal type / 50' TDH		
O	Motor	ODP 20 HP 460 V / 3 PH / 60 HZ		
P	Automatic Control Panel	Nema 12 enclosure with Omron PLC		
Q	Backwash waste (piping diameter)	2	in.	
R	City Water Inlet (diameter)	2	in.	
S	Filter Face Piping Size (Inlet/Outlet)	8	in.	
T	Maximum Operating Pressure	100	psig	
U	Maximum Operating Temperature	105	F	
V	Installation Space Required	23'3" L x 6'3" H x 9'8" D (two banks of 6 vessels)		
W	Approximate Weight	28 500	lbs	

OPTION

SYSTEM INCLUDES 12 TANKS

ALL TANKS ASME CERTFIED AND STAMPED

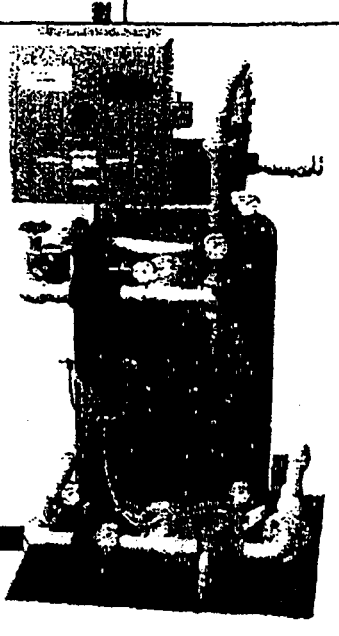

FEED	
1 200	gpm Total
100	gpm/vessel
8	Inlet

BACKWASH	
45	gpm
8	minutes
2.0	Outlet

FILTERED WATER	
1 200	gpm Total
100	gpm/vessel
8	Outlet

CONTROL PANEL

NEMA 12 Enclosure C/W PLC
Including differential pressure switch
backwash counter, alarm,
manual push button
stager, main disconnect switch
and motor starter for the pump
Dry contact for B.A.S.

Sonitec INC.

A12-30-SP-2M.xls

By EK 10/17/01
Ck: JB 10/18/01

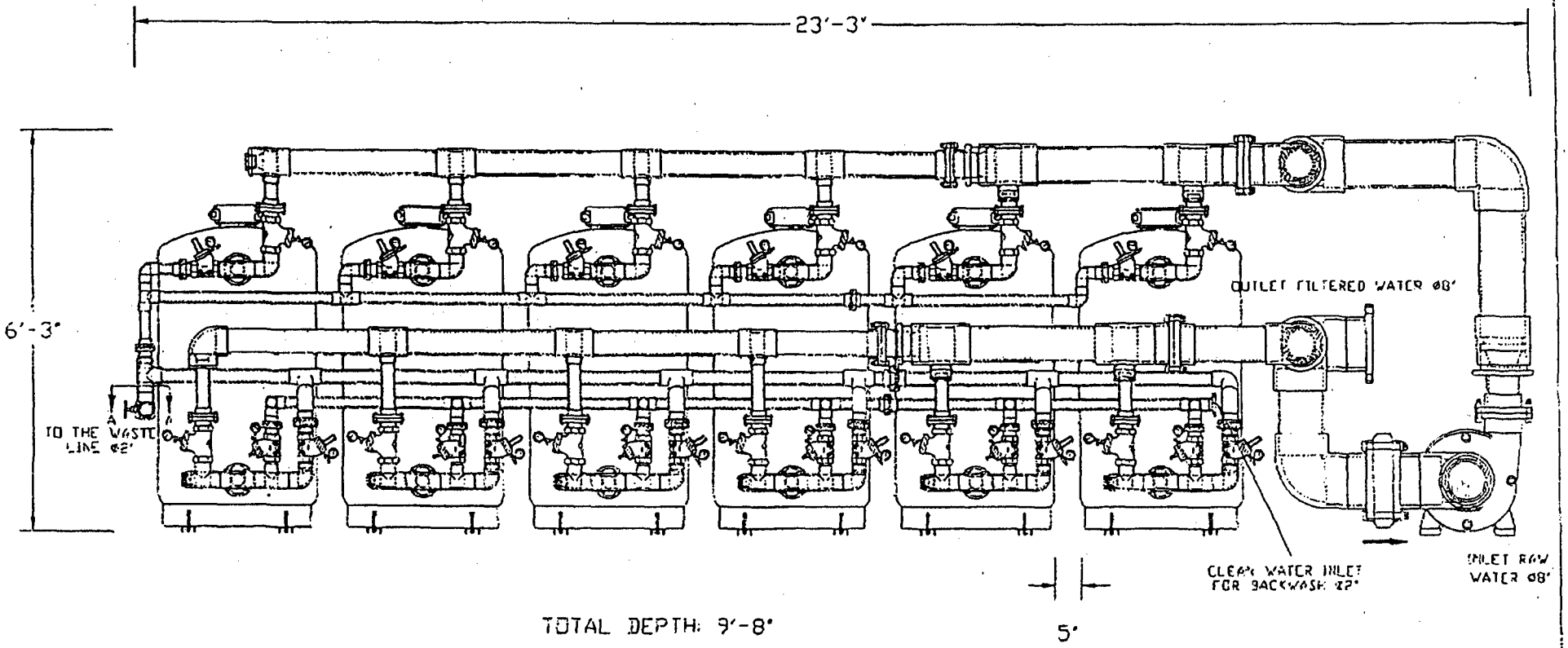

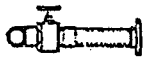

SECTION A-A

For illustration purposes only

REV.	DESCRIPTION	DATE	BY

SONITEC INC

NAME:

TITLE: VORTISAND® A12-30-SP

DRAWN BY: B.B.	APPR. BY
VER BY:	SC[illegible]
DATE JUNE 14 1994	N[illegible] 2-30-SP

COPYRIGHT
THE INFORMATION [illegible] AND CANNOT BE [illegible] WITHOUT PRIOR [illegible]
CONTENTS OF THIS DRAWING ARE THE SOLE PROPERTY OF SONITEC INC. [illegible] DISTRIBUTED IN ANY FORM OR BY ANY MEANS [illegible] PERMISSION FROM SONITEC INC.

NOTE : ALL DIMENSIONS ARE APPROXIMATE AND MAY V[illegible] FABRICATION

10/17/01 by CZ

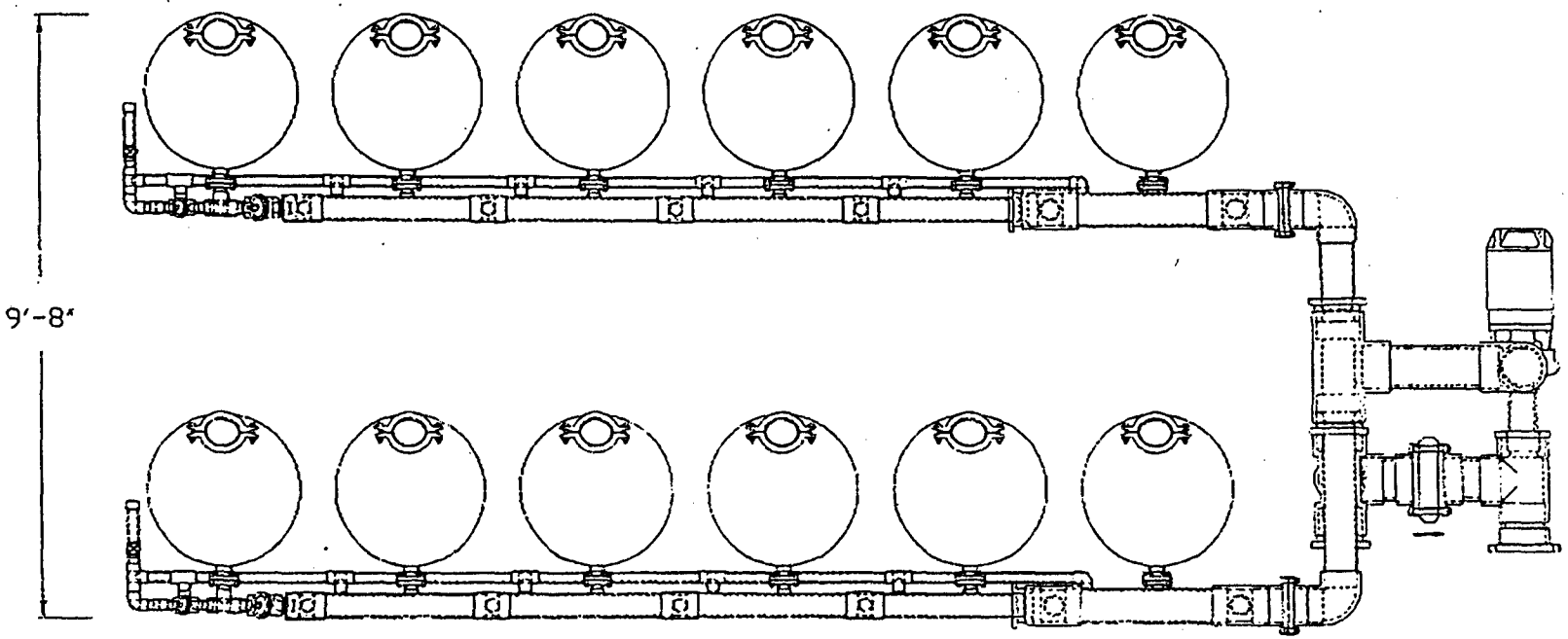

For illustration purposes only

REV.	DESCRIPTION	DATE	PAR

SONITEC INC.

NOM:	
TITRE: VORTISAND® A12-30-SP	
DESS. PAR: B.B.	APPR. PAR:
VERIF. PAR:	DATE: JUNE 14 1994
ECHELLE: ---	NO. A12-30-SP

CALCULATION COVER SHEET

PROJECT New Bedford Harbor Superfund Site OU#1

SUBJECT Polishing Filtration System (PF-401/PF-402) Sizing

CLIENT U.S. Army Corps of Engineers – New England District (USACE – NED)

CALCULATION NO. P-12 PROJECT NO. 5197.1720.3392

NO OF SHEETS 18 DESIGN LEVEL _____

CALCULATION BY OTHERS _____ YES X NO

PREPARER E. Griffin

REVIEWED BY [signature] DATE 10-30-01

ASSUMPTIONS THAT REQUIRE CONFIRMATION _____ YES X NO

ASSUMPTIONS CONFIRMED BY _____ DATE _____

PRINT NAME, DATE AND INITIAL

Rev No	Affected Sheets	Prepared by Date	Checked by Date	Verified by Date

FOSTER WHEELER ENVIRONMENTAL CORPORATION

BY EG DATE 8/8/01 SHEET 2 OF 18

CHKD. BY JB DATE 8/9/01 OFS NO. DEPT. NO.

CLIENT USACE

PROJECT New Bedford Harbor Superfund Site

SUBJECT Polishing Filtration (Cartridge Filters)

Catridge Filter Vessels (2): CUNO Housing Model# ES36120D4B1GAE3BB

Each unit holds the following catridge filters:

① 120 pcs. CUNO Micro-Klean # G78B8-4N, 5 μm nominal | 20 μm absolute, 39" long

② 120 pcs CUNO Beta-Klean # Z8-050, 5 μm nominal, 40" long (assume)

FIND: Flow rate per 9 3/4" cartridge filter and 10" cartridge filter

ASSUME:

- wastewater flow rate = 700 gpm
- 1 vessel active, 1 vessel standby

SOLUTION:

①

$$\frac{700\ \text{gpm}}{120\text{-}39''\ \text{cartridges}} = \frac{5.83\ \text{gpm}}{39''\ \text{cart.}} \div 4 = \boxed{\frac{1.46\ \text{gpm}}{9\,3/4''\ \text{cart.}}} = q_1$$

Manufacturer recommends: $q_1 < 5$ gpm (Micro-Klean) ✓

②

$$\frac{700\ \text{gpm}}{120\text{-}40''\ \text{cartridges}} = \frac{5.83\ \text{gpm}}{40''\ \text{cart.}} \div 4 = \boxed{\frac{1.46\ \text{gpm}}{10''\ \text{cart.}}} = q_2$$

Manufacturer recommends: $q_2 < 3$ gpm (Beta-Clean) ✓

CUNO Filters

June 27, 2001 by GG 8/8/01 3/18

Joe Francis ck JB 8/9/01 617 457-8409
Foster Wheeler 617 457-8498fx
133 Federal St.- 6th flr
Boston, MA 02110

Re: New Bedford Harbor Cleanup Project

Dear Joe,
Thank you for meeting with Leon Martin and myself regarding your water filters. With the addition of the mesh screen and plate & frame prefilters along with the sand filter in the new conceptual design this will all improve the service life of the cartridge filters. The Cuno Micro-Klean's rigid, resin bonded construction and true graded density design will be critical to the removal of the PCB's and also greatly improve the life of the GAC filters; as you have proven on-site previously.

Since meeting with you we have discussed your application with Cuno and examined the Cartridge data and concluded 67% of your filter life will be used during the first 0-5 PSID and the last 33% will be used during the next 6-20 PSID. Therefore there is no benefit in your application to run the filters past 20 PSID.

Please change out filters at 20 PSID.

MWM is pleased to quote the following duplex system for 700GPM:

2 pcs. CUNO Housing Model # ES36120D4B1GAE3BB, 304 S.S., ASME Code 150 PSI @ 250°F, 8" Flanged Side Inlet and 180° Side Outlet with clean & dirty drains, vent connection and gauge connections.

$ 23,778.00 each pc.

Each unit holds 120 pcs. of the following:

120 pcs. CUNO Micro-Klean # G78B8-4N, 5 μm nominal / 20μm absolute, 39" long, rigid, resin bonded depth filter with grooves for added surface area and life.

$ 15.66 each

Please give me a call with any questions; we are trying to set up a filtration seminar to come in for a couple hours over lunch.

Thank you,

Jim McCluskey

distributed by: MWM Company Inc.
11 Newbury St. / PO Box 710067
Quincy, MA 02171
tel: 617-328-1920/fax: 617-472-4260

/ 4/18

MWM Filters

August 8, 2001 by 26 8/8/01
ck JB 8/9/01

Erin Griffin 617 457-8294
Foster Wheeler 617 457-8499fx
133 Federal St.- 6th flr
Boston, MA 02110

Re: New Bedford Harbor Cleanup Project

Dear Erin,
Thank you for calling regarding your water filters at the increased flow rate of 2000GPM. With the addition of the mesh screen and plate & frame prefilters along with the sand filter in the new conceptual design this will all improve the service life of the cartridge filters. The Cuno Micro-Klean's rigid, resin bonded construction and true graded density design will be critical to the removal of the PCB's and also greatly improve the life of the GAC filters; as you have proven on-site previously.

We will keep with our initial plan to keep the flow rate per cartridge as low as we can to get the longest cartridge service life possible. For 2000 GPM you need 3 units to run. For backup while you change out we recommend 2 units that will give you 1440 GPM or 72% of your total flow rate with the same filter life. For backup you could actually flow the whole 2000 GPM through 1 unit; however you would not get good service life.

MWM is pleased to quote the following duplex system for 2000GPM:

5 pcs. CUNO Housing Model # ES36120D4B1GAE3BB, 304 S.S., ASME Code 150 PSI @ 250°F, 8" Flanged Side Inlet and 180° Side Outlet with clean & dirty drains, vent connection and gauge connections.

$ 23,778.00 each pc.

Each unit holds 120 pcs. of the following:

120 pcs. CUNO Micro-Klean # G78B8-4N, 5 µm nominal / 20µm absolute, 39" long, rigid, resin bonded depth filter with grooves for added surface area and life.

$ 15.66 each

Please give me a call with any questions; we are trying to set up a filtration seminar to come in for a couple hours over lunch.

Thank you,

Jim McCluskey

11 Newbury St. / PO Box 710067
Quincy, MA 02171
tel: 617-328-1920/fax: 617-472-4260
MWM@MWMcoinc.com

by EB 8/8/01
ck JB 8/9/01

2 5/18

MWM Filters

August 8, 2001

Foster Wheeler

Filtration Notes:

Each unit holds 120 forty inch long filters.

Normal Operation Run 2000 GPM thru 3 units= 1.4 GPM per 10" filter.

Options When changing filters @ 20 PSID:

1. Use one backup unit and run all 2000 GPM thru= this will give you very short filter life.
2. Use one backup unit and slow flow down to 720 GPM (36%) and get normal service life.
3. Use two backup units and run all 2000 GPM thru= this will give you 2.09 GPM per 10" filter, which will be fine.
4. Use two backup units and slow flow down to 1440 GPM (72%) and get normal service life.

These options are really up to you for the maximum service life of the filter cartridges we recommend option 2 or 4.

Please give me a call with any questions.

Thank you,

Jim McCluskey

11 Newbury St. / PO Box 710067
Quincy, MA 02171
tel: 617-328-1920/fax: 617-472-4260
MWM@MWMcoinc.com

Each Unit Holds
120 forty inch filters

2000 GPM thru 3 unit

8/9 AUG 08 2001 13:22

8/9/8 10/8/8

by EG 8/8/01
CK JB 8/11/01

CUNO

Micro-Klean® III
Premium Resin Bonded Filter Cartridges

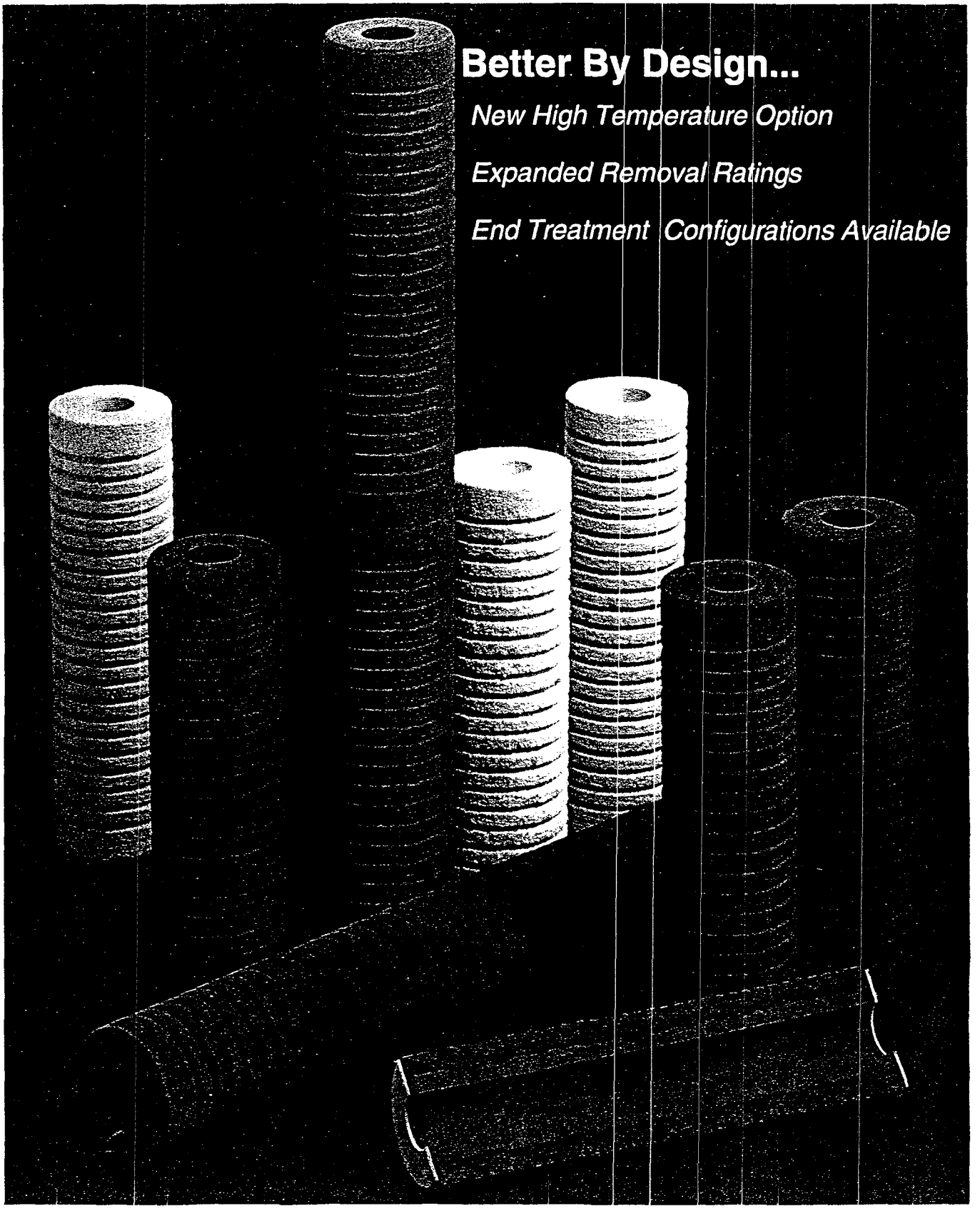

Micro-Klean III - *Better By Design*

Features	Benefits
■ Graded Density Design	■ Low Pressure Drop and Long Life for Consistent Filtration Performance
■ Rigid Resin Bonded Structure	■ No By-pass or Unloading with High Pressure Drops or Pressure Surges
■ No Metal or Plastic Cores	■ Easy Disposal
■ Broad Chemical Compatibility	■ For Chemically Aggressive Applications
■ 300°F Acrylic Cartridge Multi-length Option	■ Ease of Installation and Removal in High Temperature Applications
■ Available in FDA (CFR21) Compliant Materials	■ Suitable for Food, Beverage, and Pharmaceutical Applications
■ Available with Optional End Treatments	■ Can be used in Competitive Filter Housings
■ Broad Range of Ratings from 7μm Absolute to 150μm Nominal	■ Wide Range of Effective Applications

Design

The exclusive Micro-Klean III manufacturing process produces a rigid, resin bonded, graded density structure that eliminates by-pass and the unloading characteristics of soft and easily deformable, competitive filter cartridges such as spiral wound, melt-blown and string wound cartridges. The design of Micro-Klean III provides a family of filter cartridges that offer distinct advantages:

- ☐ Consistent particle removal efficiencies with sharp cut-offs,
- ☐ Extended cartridge life,
- ☐ Ability to withstand high temperatures and elevated differential pressures,
- ☐ Broad chemical compatibility, and
- ☐ Consistent batch to batch filtration characteristics.

Construction

Micro-Klean III filter cartridges are the product of continuous refinement of manufacturing and fiber technologies. Available in both grooved and ungrooved versions, Micro-Klean III filters are ideal for a wide variety of applications. The grooving of the outer surface significantly increases the filter's effective surface area, and increases the contaminant holding capacity. The ungrooved version of the Micro-Klean III is excellent for the removal of gels and other deformable contaminants. To ensure compatibility with a wide range of process fluids, Micro-Klean III is available in different combinations of fiber type and resin (see table 1). For more information about chemical compatibility and Micro-Klean III, refer to CUNO publication GF.G02.

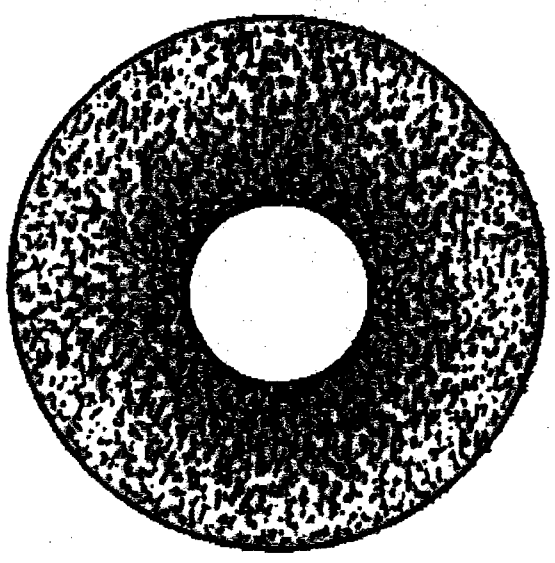

PICTURE 1. - MICRO-KLEAN III CROSS-SECTION SHOWING TRUE GRADED DENSITY DESIGN

FORMULATION	FIBER	RESIN
2	Cellulose/Glass*	Melamine
	Cellulose (FDA Compliant)	Melamine
3	Cellulose/Glass*	Phenolic
	Cellulose	Phenolic
7 (Z Grade)	Acrylic/Glass	Phenolic
8	Acrylic	Phenolic

* Available only as 3 micron rated cartridges

TABLE 1. - CARTRIDGE FORMULATIONS

Micro-Klean III - *Better By Design*

OPERATING DATA by EG 8/8/01 ck JB 8/9/01

Standard Micro-Klean III formulation is designed for maximum operating temperatures up to 300°F depending upon options selected. Use of Cuno's patented polyethylene foam flat gasket for enhanced sealing limits the maximum operating temperature to 200°F. Micro-Klean III filter cartridges will withstand differential pressures of up to 70 psid. To enhance both filter life and filtration efficiency, Cuno recommends use of the lowest possible flow rate and filter replacement at 35 psid.

The **Micro-Klean III Z Grade** Performance Engineered cartridges (Picture 2) combine absolute (99.9%) removal efficiencies, at 7, 10, 12, and 15 µm, with high flow, low differential pressure, and enhanced life. All Z grade cartridges include a polyethylene foam flat gasket to provide optimum sealing (200°F maximum operating temperature). Other performance parameters, including differential pressure limits are the same as standard Micro-Klean III.

PICTURE 2. - MICRO-KLEAN III Z GRADE CROSS-SECTION

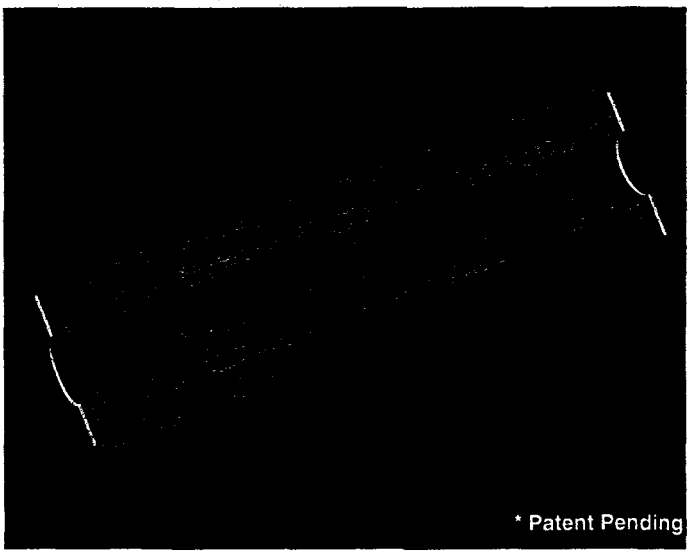

SHOWING DUAL LAYER

Micro-Klean III High Temperature option is recommended for applications with operating temperatures from 180°F to 300°F. The high temperature cartridge is the standard acrylic fiber and phenolic resin formulation with multi-length (19 1/2 " to 40" long cartridges) bonding using a filter grade high temperature resin for durability in the installation and removal process. All high temperature, o-ring end treatments will be polyester.

PERFORMANCE

Micro-Klean III combines the principles of surface and depth filtration in one cartridge to provide enhanced filter service life, particle removal efficiency and optimum flow characteristics.

Enhanced Service Life

Laboratory testing has shown that, compared to competitive products of equally reported retention ratings, Micro-Klean III can hold up to 2 or more times the contaminant (Graph 1) by weight.

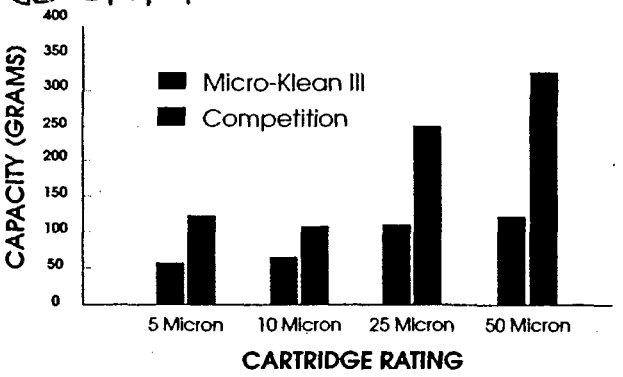

Particle Removal Efficiency

Continuous, on-line, nondestructive testing during the manufacturing process ensures consistent batch to batch cartridge performance. Micro-Klean III particle removal efficiencies provide a sharp cut-off and consistent particulate removal throughout the cartridge life as shown in Graph 2 below.

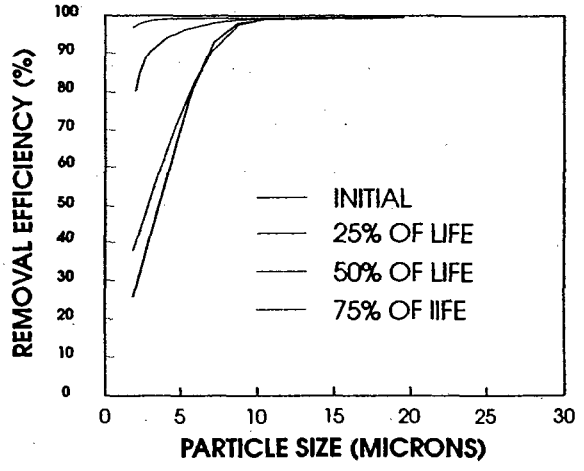

Turbidimetric Efficiency

Micro-Klean III exhibits a constant and uniform effluent turbidity for nearly 70% of its service life (Graph 3). Non-rigid filters, wound or melt blown, by comparison can exhibit erratic effluent turbidities as they load and unload, indicating by-pass.

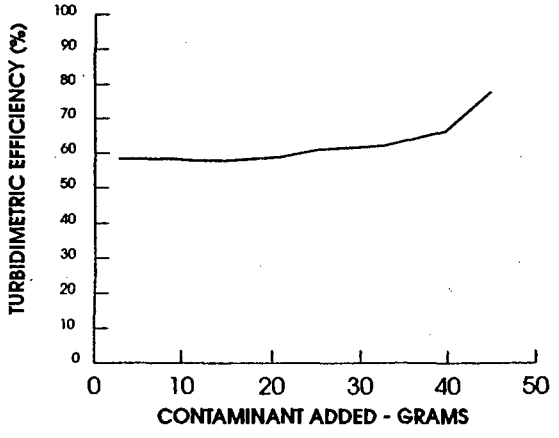

GRAPH 3. - TYPICAL MICRO-KLEAN TURBIDIMETRIC EFFICIENCY to 10 psid pressure drop

Maximum Aqueous Flow Rates

by EG 8/8/01
CR JB 8/9/01

Recommended maximum aqueous flow rates for the range of cartridge ratings are listed in table 2. Note that the flow rate is per 9 3/4" long cartridge.

GRADE DESIGNATION	RATING (Microns)	*FLOW RATE (gpm)
Z7070	7 Absolute	3
Z7100	10 Absolute	3
Z7120	12 Absolute	4
Z7150	15 Absolute	4
Y	1 Nominal	4
A	3 Nominal	4
B	5 Nominal	5
C	10 Nominal	5
F	25 Nominal	6
L	50 Nominal	6
Q	75 Nominal	8
V	100 Nominal	8
W	125 Nominal	8
X	150 Nominal	8
* PER 9 3/4" ELEMENT		

TABLE 2. - AQUEOUS FLOW RATES

Cartridge Configurations

Standard Micro-Klean III filter cartridges are available in multiple lengths with or without various end treatments to fit your current housing (Table 3). Note that for applications with operating temperatures greater than 180°F, use the Micro-Klean III High Temperature formulation. Standard Z grade cartridges utilize a polyethylene flat gasket with a maximum operating temperature of 200°F.

PARAMETER	DESCRIPTION
Length	9 3/4" to 40"
Inside Diameter	1 1/16"
Outside Diameter	2 19/32"

TABLE 3. - MICRO-KLEAN III PARAMETERS

Special Configurations

Micro-Klean III is available in special configurations including polypropylene, polyester o-ring and a variety of other end treatments. The length, outside diameter, and inside diameter can be designed to your custom requirements. Consult your local CUNO Distributor for more information.

Filter Housings

Cuno manufactures a full line of Micro-Klean III compatible housings to meet most application requirements. Models are available for both air and liquid applications in a wide range of construction materials, from plastics to ASME Code Design with 316 L stainless steel, to suit a variety of application needs. For more information about CUNO filter housings, consult your local CUNO distributor.

- 1M - Plastic
- CT - Brass
  Stainless Steel
- AL - Steel
  Stainless Steel
- DC - 304 S.S
  316 S.S.
- PL - ASME Design
- FL - ASME Design
  All Variations
- 1H - High Pressure
- VC - PVC Range
- PC - Steel
  Stainless Steel
- CTG-Klean - Exclusive
  totally enclosed filter pack

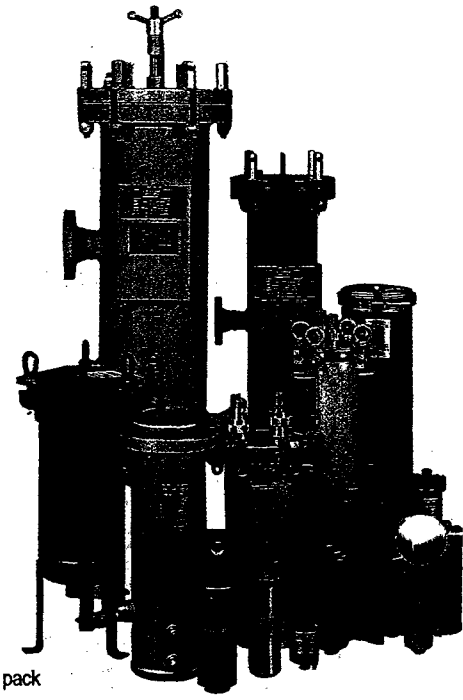

Disposal

Micro-Klean III filter cartridges can be incinerated, shredded, or crushed after use to reduce overall disposal costs. For more information about Micro-Klean disposal, ask your local CUNO distributor for literature GF.TD2.

Micro-Klean III - *Better By Design*

New High Temperature Option

Expanded Removal Ratings

End Treatment Configurations Available

Micro-Klean III - *Better By Design*

Micro-Klean III Ordering Guide

by EG 8/8/01
ck JB 8/9/01

Standard Product

SURFACE TYPE	CARTRIDGE LENGTH *	DESIGNATION GRADE - Rating	FORMULATIONS AVAILABLE	CARTRIDGE LENGTHS *	OPTIONS
G - Grooved	78 - 9 3/4"	Y - 1µm	8	1	N - None
U - Ungrooved	80 - 10"	A - 3µm	2,3,8	2	G - Polyethylene Gasket
		B - 5µm	2,3,8	3	X - 316 S.S. Core Extender
		C - 10µm	8	4	P - Polypropylene core Extender
		F - 25µm	2,3,8		S - Shrink Wrap
		L - 50µm	2,3,8		T - Tissue Wrap
		Q - 75µm	8		
		V - 100µm	8		
		W - 125µm	8		
		X - 150µm	8		

Micro-Klean III Z Grade

SURFACE TYPE	CARTRIDGE LENGTH *	MEDIA	GRADE	CARTRIDGE LENGTHS *	END TREATMENT
G - Grooved	78 - 9 3/4"	Z7 - Virgin Acrylic Fiber	070	1	G - Polyethylene Gasket
U - Ungrooved	80 - 10"		100	2	
			120	3	
			150	4	

Micro-Klean III High Temperature

SURFACE TYPE	CARTRIDGE LENGTH *	DESIGNATION GRADE - Rating	FORMULATIONS AVAILABLE	CARTRIDGE LENGTHS *	TEMPERATURE OPTION	END TREATMENT OPTIONS **	GASKET/O-RING
G - Grooved	78 - 9 3/4"	Y - 1µm	8	1	H - High Temperature	N - None	N - None
U - Ungrooved	80 - 10"	A - 3µm	8	2		X - 316 S.S. Core Extender	A - Silicone
		B - 5µm	8	3		B - Single Open End, 226 Bayonet Lock & Fin	B - Fluorocarbon
		C - 10µm	8	4		C - Single Open End, 222 O-ring & Fin	C - EPR
		F - 25µm	8			F - Single Open End, 222 O-ring & Flat Cap	D - Nitrile
		L - 50µm	8				
		Q - 75µm	8				
		V - 100µm	8				
		W - 125µm	8				
		X - 150µm	8				

* Cartridge overall lengths will be multiples of either 9 3/4" or 10".
** B, C, and F options constructed of polyester.

Special Configurations

Micro-Klean III is available in special configurations including polypropylene end treatments. The length, outside diameter, and inside diameter can be designed to your custom requirements. Consult your local CUNO Distributor for more information.

WARRANTY

Seller warrants its equipment against defects in workmanship and material for a period of 12 months from date of shipment from the factory under normal use and service and otherwise when such equipment is used in accordance with instructions furnished by Seller and for purposes disclosed in writing at the time of purchase, if any. Any unauthorized alteration or modification of the equipment by Buyer will void this warranty. Seller's liability under this warranty shall be limited to the replacement or repair, F.O.B. point of manufacture, of any defective equipment or part which, having been returned to the factory, transportation charges prepaid, has been inspected and determined by the Seller to be defective. THIS WARRANTY IS IN LIEU OF ANY OTHER WARRANTY, EITHER EXPRESSED OR IMPLIED, AS TO DESCRIPTION, QUALITY, MERCHANTABILITY, FITNESS FOR ANY PARTICULAR PURPOSE OR USE, OR ANY OTHER MATTER. Under no circumstances shall Seller be liable to Buyer or any third party for any loss of profits or other direct or indirect costs, expenses, losses or consequential damages arising out of or as a result of any defects in or failure of its products or any part or parts thereof or arising out of or as a result of parts or components incorporated in Seller's equipment but not supplied by the Seller.

Service Worldwide

Fluid Purification

CUNO Pacific Pty Ltd
140 Sunnyholt Road
Blacktown, NSW 2148
Australia

CUNO Latina Ltda
Rua Amf Do Brasil 251
18120 Mairinque-Sp
Brazil

CUNO Europe SA
Chemin du Contre Halage
62730 - Les Attaques
France

CUNO GmbH
Wihl-Th-Römheld-Str. 32
55130 Mainz
Germany

CUNO Srl
Via Tonale n°3
20037 Paderno Dugnano
Italy

CUNO K.K.
Hodogaya Station
Building 6F
1-7 Iwai-cho, Hodagaya-ku
Yokohama 240 Japan

CUNO Filtration Asia Pte Ltd
1 Tech Park Cresent
Singapore 638131

CUNO Europe
Tachbrook Park Drive
Tachbrook Park
Warwick CV34 6TU
United Kingdom

Cuno Incorporated
400 Research Parkway
Meriden, CT 06450, U.S.A.
Tele: (203) 237-5541
Fax: (203) 238-8977

© CUNO INCORPORATED, 1997 - ALL RIGHTS RESERVED

LITCMK.001.1093

12-118

CUNO

Fluid Purification

Beta-Klean™

Absolute Rated High Pressure Filter Cartridge

The Clear Solution

To Challenging Filtration Applications

by EG 8/8/01
ck SB 8/9/01

13/18

BETA-KLEAN FEATURES AND BENEFITS

FEATURE	ADVANTAGE	BENEFIT
♦ Absolute rated cartridge filters from 5 - 70 microns	♦ Absolute filtration efficiency at the specified removal rating	♦ Consistent production yields with absolute contaminant retention
♦ Rigid resin bonded structure	♦ No by-pass or unloading at high differential pressure	♦ Consistent product quality throughout the filter's life
♦ Grooved surface with true graded-density internal structure	♦ Significantly longer life	♦ Cost effective filtration with optimized yields
♦ 300°F high temperature option	♦ Choice of temperature compatible options	♦ Inventory one product for many applications
♦ No metal or plastic cores	♦ Easy disposal,suitable for incineration or shredding	♦ Disposal cost reduction
♦ Available with polypropylene or polyester end modifications	♦ Retrofit any industrial housing	♦ Usable in existing filter housings

Beta-Klean - The Clear Solution

Cuno continues an 80 year tradition of innovative cost effective solutions to challenging industrial filtration applications with Beta-Klean. Beta-Klean is a truly absolute rated, rigid (non-compressible) resin bonded filter cartridge.

Consistent quality and performance at absolute ratings from 5 to 70 µm make Beta-Klean the clear choice in the confusing world of **indistinguishable "me-too" cartridge filters.**

Consistent Performance

Absolute rated rigid structure Beta-Klean provides consistent performance. Unlike many competitors, Beta-Klean does not unload or lose filtration efficiency throughout its usable life!

Significant Life Advantage

Beta-Klean's rigid graded density grooved structure provides a significant life advantage over the competition!

CUNO provides quality solutions worldwide for the most challenging filtration applications. CUNO filtration systems include clarifying filters, pre-filters, final filters, stainless steel housings and engineered skid-mounted systems designed and sized for specific applications.

What is Beta-Klean?

Beta-Klean is a rigid, graded-density filter cartridge constructed primarily of acrylic fibers, cellulose fibers, and a tough chemically resistant thermosetting resin. The proprietary manufacturing process results in more fibers towards the center core region creating a graded-density structure. The thermosetting resin "bonds" the fibers into a permanent rigid matrix. Beta-Klean cartridges are grooved to significantly increase the surface area and extend the service life. Beta-Klean is manufactured and tested to deliver quality, consistency, and absolute cost effective filtration performance. Cuno's in-process quality assurance provides the control that results in consistent cartridges with defined absolute ratings time-after-time-after-time.

Absolute Beta-Klean

Absolute Beta-Klean removal ratings are determined for the entire cartridge life using a new filter performance test developed by CUNO that complies with the general procedure outlined in ASTM 975. A copy of Cuno's Technical Report summarizing absolute rating of Beta-Klean cartridges and the test methodology is available by requesting Cuno literature number LITTDMPC2.795.

Cuno defines Absolute Rating as " the particle size (x) providing an initial Beta Ratio (β_x) = 1000." At this Beta Ratio the removal efficiency is equal to 99.9%. Beta Ratio (β_x) is defined by the following equation:

$$\beta_x = \frac{\text{Cumulative Number of Particles Larger than x in the Influent Challenge}}{\text{Cumulative Number of Particles Larger than x in the Effluent}}$$

Beta-Klean filters achieve a minimum Beta$_x$ (β_x) value of 1000 at the specified ratings seen in Table 1.

GRADE DESIGNATION	B_x = 1000 ($_x$ = ABSOLUTE MICRON RATING)
Z8 050	5
Z8 070	7
Z8 100	10
Z8 140	14
Z8 150	15
Z8 200	20
Z8 300	30
Z8 400	40
Z8 500	50
Z8 700	70

TABLE 1. - BETA-KLEAN ABSOLUTE RATINGS

High Temperature Beta-Klean

Standard Beta-Klean provides consistent performance at temperatures to 250°F (121°C) and differential pressures to 70 psid (4.8 bar). High temperature (HT) Beta-Klean extends the temperature rating to 300°F (149°C) for those processes that require service under extreme conditions.

Rigid Graded-Density Beta-Klean

Rigid Graded-Density Beta-Klean

Beta-Klean filter cartridges are manufactured using an exclusive proprietary process that achieves a true "graded-density" fiber structure with a clean and smooth inside diameter. Each fiber is locked in this arrangement by a thermosetting resin binder to create a rigid structure, eliminating the need for a metal or plastic center core. Larger particles are trapped in the outer area and finer particles towards the inner area. Figure 1 illustrates how in a graded-density structure the overall effect is to classify and retain particles by size as they progress through the cartridge.

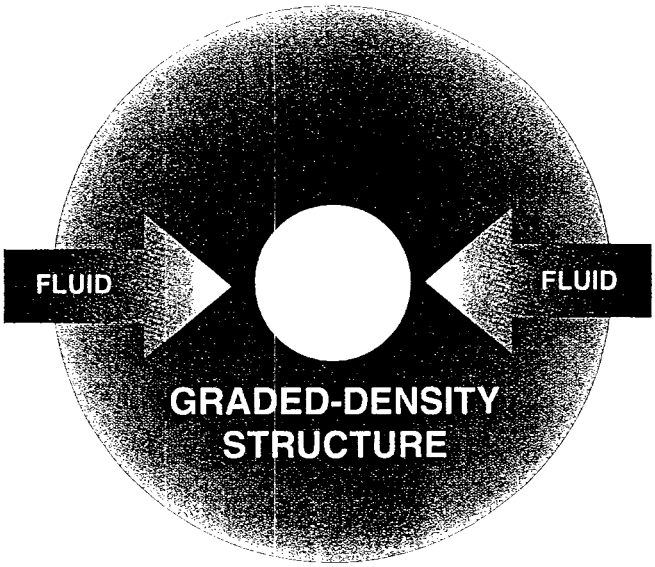

FIGURE 1. - BETA-KLEAN GRADED-DENSITY STRUCTURE

High Surface Area Beta-Klean

Beta-Klean cartridges also feature an optimized groove pattern that increases the surface area by over 65% when compared to smooth cylindrical cartridges (see Figure 2). The grooved surface prevents premature blinding of the outer surface by large particles and allows full utilization of the depth structure. Maximum surface area with a true graded-density structure means that Beta-Klean can provide **3 times or greater service life than competitive filter cartridges.**

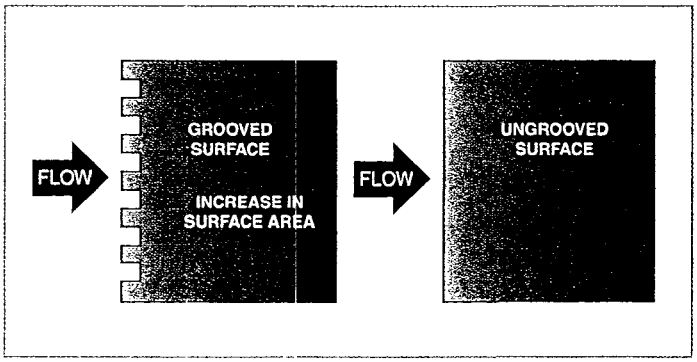

FIGURE 2. - SURFACE AREA COMPARISON

Beta-Klean Applications

Beta-Klean provides consistent reproducible filtration performance and longer life while meeting or exceeding quality specifications in a wide variety of industrial processing applications. Beta-Klean is particularly well suited for high viscosity fluids, high temperature processes, and differential pressures to 70 psid (4.8 bar)

Applications include:

- **Petroleum Products - gasoline, kerosene, lube oil, fuel oil, waxes**
- **Chemical/Petrochemical - acids, bases, organic solvents, catalysts, monomers, polymers, glycols**
- **Water - process water, produced water, boiler feed, demineralized feed, pre-reverse osmosis system, waste water**
- **General Industrial - paint, varnish, lacquer, inks, coatings, emulsions, magnetic media, resins, detergents, adhesives**
- **Brines and aqueous salt solutions**

Reproducible Cost Effective Filtration

Beta-Klean is manufactured to rigid specifications and subjected to stringent process and quality controls to ensure consistency in filtration performance and, ultimately, end-user process consistency - run after manufacturing run.

Beta-Klean Product Specifications

ABSOLUTE RATING (µm)	GRADE	FIBER	RESIN
5	Z8050	Acrylic/Glass/Cellulose	Phenolic
7	Z8070		
10	Z8100		
14	Z8140		
15	Z8150		
20	Z8200	Acrylic/Cellulose	Phenolic
30	Z8300		
40	Z8400		
50	Z8500		
70	Z8700		
Cartridge End Modifications			
Standard Temperature		Polypropylene bonding with polypropylene end modifications	
High Temperature		Thermoset epoxy bonding with polyester end modifications	
Operating Parameters			
Maximum Operating Temperature		Standard - 250°F (121°C) With polyethylene gasket - 200°F (93°C) With polypropylene end modifications - 180°F (82°C) High Temperature Option - 300°F (149°C) with or without polyester end modifications	
Maximum Differential Pressure		70 psid (4.8 bar) @ 68°F (20°C)	
Recommended Change-out Differential Pressure		35 psid (2.4 bar)	
Dimensions			
Inside Diameter		1 1/16" (26.9 mm)	
Outside Diameter		2 19/32" (65.9 mm)	
Cartridge Length		9 3/4" through 40" (248 - 1016 mm)	

by EG 8/8/01
ck JB 8/9/9

15/18

Beta-Klean - Providing Superior Performance

CARTRIDGE CROSS REFERENCE

The data in the following table was developed through extensive filter performance testing. The "Cuno Life Advantage" data is based on contaminant added values comparing filter elements of approximately equal efficiencies. The filtration efficiency/Beta Ratio performance of competitive "nominal rated" and many "absolute rated" filter cartridges vary greatly throughout their usable life (refer to Graphs 1 and 2).

Cartridge Manufacturer	Designation	Cartridge Type	Manufacturer Rating	Cuno Replacement	Cuno Absolute Rating (µm)	Cuno Life Advantage[1]
Commercial, Parker-Hannifin RBC	RBC 5	Resin bonded, coreless	5 Nominal	BKZ8300	30	1.5
	RBC 10		10 Nominal	BKZ8400	40	1.5
	RBC 25		25 Nominal	BKZ8500	50	1.5
	RBC 50		50 Nominal	BKZ8700	70	1.5
Filterite / Memtec - HIV	RPN XF	Resin bonded, coreless	1 Nominal	BKZ8200	20	1.5
	RPN 5		5 Nominal	BKZ8500	50	1.5
	RPN 10		10 Nominal	BKZ8500	50	2.0
	RPN 25		25 Nominal	BKZ8700	70	3.0
Pall Profile II	RM1F050	Melt-blown polypropylene wound on center core	5 Absolute	BKZ8050	5	1.5
	RM1F070		7 Absolute	BKZ8070	7	1.5
	RM1F100		10 Absolute	BKZ8100	10	2.0
	RM1F150		15 Absolute	BKZ8150	15	2.5
	RM1F200		20 Absolute	BKZ8200	20	2.5
	RM1F400		40 Absolute	BKZ8400	40	2.5
	RM1F700		70 Absolute	BKZ8700	70	1.5
	RM1F900		90 Absolute	BKZ8700	70	2.0
Selex / Osmonics	SXE -01	Melt-blown polypropylene, coreless	1 Not clearly defined	BKZ8050	5	3.0
	SXG-03 *		3 Not clearly defined	BKZ8070	7	2.5
	SXD -05		5 Not clearly defined	BKZ8100	10	3.0
	SXA -10 *		10 Not clearly defined	BKZ8140	14	2.5
	SXC -20		20 Not clearly defined	BKZ8300	30	3.0
	SXF-30 *		30 Not clearly defined	BKZ8400	40	2.5
Hytrex II / Osmonics	GX-01	Spun polypropylene fiber, coreless	1 Nominal	BKZ8200	20	2.0
	GX-03		3 Nominal	BKZ8300	30	3.0
	GX-05		5 Nominal	BKZ8300	30	2.5
	GX-10		10 Nominal	BKZ8400	40	2.5
	GX-20		20 Nominal	BKZ8500	50	2.5
	GX-50		50 Nominal	BKZ8700	70	3.0
Generic Wounds (Cotton)	03 µm	String wound on center core	3 Nominal	BKZ8100	10	2.0
	05 µm		5 Nominal	BKZ8150	15	2.0
	10 µm		10 Nominal	BKZ8200	20	2.0
	25 µm		25 Nominal	BKZ8300	30	2.0
	50 µm		50 Nominal	BKZ8700	70	2.5
	75 µm		75 Nominal	❑	❑	❑

[1] Life advantage is determined from laboratory performance tests at 3 gpm/EQSL

* Extrapolation from literature.

❑ Insignificant Beta Ratio for 70 µm particles.

Beta-Klean Flow Rates

Table 2 provides flow information for Beta-Klean in aqueous fluids.

GRADE	ABSOLUTE RATING (µm)	SPECIFIC PRESSURE DROP PER 10" CARTRIDGE[1]		RECOMMENDED MAXIMUM AQUEOUS FLOW RATE[2] PER 10" CARTRIDGE	
		psi/gpm	mbar/lpm	gpm	lpm
Z8 050	5	0.75	13.6	3	11.4
Z8 070	7	0.33	5.98	3	11.4
Z8 100	10	0.20	3.64	4	15.1
Z8 140	14	0.16	2.89	4	15.1
Z8 150	15	0.27	4.88	4	15.1
Z8 200	20	0.13	2.34	5	18.9
Z8 300	30	0.08	1.44	5	18.9
Z8 400	40	0.06	1.10	6	22.7
Z8 500	50	0.05	0.89	7	26.5
Z8 700	70	0.03	0.55	7	26.5

[1] Specific aqueous pressure drop at ambient temperature for a single equivalent 10" cartridge. For multiple cartridge lengths, divide total flow by the number of single length equivalents.

[2] Optimal efficiency and life is achieved at aqueous flow rates less than the maximum flow indicated.

TABLE 2. BETA-KLEAN FLOW RATES

For liquids other than water, multiply the specific pressure drop value (in column 3) by the viscosity in centipoise. The specific pressure drop values may be effectively used when three of the four variables (Viscosity, Flow, Differential Pressure, and Cartridge Grade) are set.

Examples Of Flow Or psid Calculations

Example 1: Determine the initial pressure drop for <u>water</u> flowing at 15 gpm per 30" (Z8300) 30 µm cartridge

Fluid = water (1centipoise)
Flow = 15 gpm
Flow per 10" cartridge = 15 ÷ 3 = 5 gpm (equal to rec. max. flow)
Specific pressure drop from column 3 of Table 2 = 0.08 psi/gpm
Calculate: 0.08 x 5 = 0.4 psi initial pressure drop for the 30" cartridge

Example 2: Determine the <u>oil</u> flow rate at an initial pressure drop of 2.0 psi per 10" (Z8500) 50 µm cartridge

Fluid = 100 centipoise oil
Initial differential pressure = 2.0 psi
Specific pressure drop from column 3 of Table 2 = 0.05 psi/gpm
Multiply psi/gpm x viscosity in centipoise = 0.05 x 100 = 5 psi/gpm per 10" cartridge
Calculate: 2.0 (psi) ÷ 5 (psi/gpm per 10" cartridge) = 0.4 gpm per 10" cartridge in 100 centipoise oil

by EG 8/8/01
CK JB 8/9/01

Beta-Klean - Ease of Use

Waste Management

Beta-Klean filter cartridges contain no metal or plastic cores. They can be incinerated, shredded, or crushed after use to reduce overall disposal costs. For more information about Beta-Klean disposal, refer to Cuno literature GF.TD2.

Beta-Klean Chemical Compatibility

Table 3 shows Beta-Klean's wide range of chemical compatibility. Beta-Klean exhibits excellent resistance to petroleum products, organic solvents, water, acids, brines and aqueous salt solutions. Beta-Klean is not recommended for strong acids or bases at temperatures over 100°F (38°C).

FLUID		RATING
CATEGORY	EXAMPLE	
Petroleum	Gasoline	R
	Kerosene	R
	Diesel Fuel	R
	Lube Oil	R
	Fuel Oil	R
	Waxes	R
Organic Solvents	MEK	R
	Benzene	R
	Toluene	R
	Xylene	R
	Alcohols	R
	Glycols	R
	Dimethyl Formamide (DMF)	N
	Amines (DEA, MDEA, MEA) 20% - 50% up to 160°F (71°C)	L
Water	Process	R
	Produced	R
	Boiler Feed	R
	Demineralizer Feed	R
	Potable Water	N
	WFI	N
Organic Acids	Acetic (100%)	R
	Tannic 10%	R
Inorganic Acids	Hydrochloric (Muriatic) Acid 5%	R
	Sulfuric 50%	R
	Sulfurous 5-10%	R
	Nitric	R
Brines and Aqueous Salt Solutions	Sodium Chloride	R
	Sodium Sulfate	R
	Sodium Nitrate	R
Weak Alkalis	Aluminum Hydroxide	R
	Ferric Hydroxide	R
	Magnesium Hydroxide	R
Fatty Acids - Oils	Detergents	R
	Mineral Oil	R
	Industrial Vegetable Oils	R
	Silicone Oils	R
Oxidizers	Hydrogen Peroxide 90%	R
R = Generally Recommended up to 250°F (121°C) unless otherwise noted.		
N = Not Recommended		
L = Likely Compatible, test before use.		

TABLE 3. - CHEMICAL COMPATIBILITY

The data presented in Table 3 is for general guidance only. Testing under specific application conditions is recommended. For various end modifications and multi-length cartridges, consult your local distributor or Cuno. Refer to Cuno publication GF.G02.788 for additional information.

INDUSTRIAL HOUSING SELECTION GUIDE					
FILTER HOUSING MODEL	CTG. HEIGHTS	NUMBER OF CARTRIDGES *	INLET/OUTLET	MAXIMUM AQUEOUS FLOW RATE **	
				gpm	lpm
1BD1	1 x 9 3/4"	2	1/2" NPT	9 1/2	36
1BD2	2 x 9 3/4"	4			
1WTS1	1 x 9 3/4"	1			
1WTS2	1 x 19 1/2"	2			
1B1, 1M1, CT 101	1 x 9 3/4"	1	3/4" NPT	16	61
1B2, 1M2, CT 102	1 x 19 1/2"	2			
1BD1	1 x 9 3/4"	2	1" NPT	27	102
1BD2	2 x 9 3/4"	4			
CT 101, 1H	1 x 9 3/4"	1			
CT 102	1 x 19 1/2"	2			
CT 103	1 x 29 1/4"	3			
3WTS1	3 x 9 3/4"	3			
3WTS2	3 x 19 1/2"	6			
3WTS3	3 x 29 1/4"	9			
7WTS1	7 x 9 3/4"	7	1 1/4" NPT	47	178
7WTS2	7 x 19 1/2"	14			
7WTS3	7 x 29 1/4"	21			
3AL1	3 x 9 3/4"	3	1 1/2" NPT	63 1/2	240
3AL2	3 x 19 1/2"	6			
3AL3	3 x 29 1/4"	9			
4DC1	4 x 9 3/4"	4			
5DC1	5 x 9 3/4"	5			
4DC2	4 x 19 1/2"	8	2" NPT	100	397
4DC3	4 x 29 1/4"	12			
5SD1	5 x 9 3/4"	5			
5SD2, 5DC2, 5VC2	5 x 19 1/2"	10			
5SD3, 5 DC3, 5VC3	5 x 29 1/4"	15			
5SD4, 5DC4	5 x 39"	20			
6AL1	6 x 9 3/4"	6			
6AL2	6 x 19 1/2"	12			
6AL3	6 x 29 1/4"	18			
7PC1	7 x 9 3/4"	7			
7PC2	7 x 19 1/2"	14			
FL08	6 x 9 3/4"	6	2" FLANGE	100	397
	6 x 19 1/2"	12			
	6 x 29 1/4"	18			
	6 x 39"	24			
PL08	6 x 29 1/4"	18			
12DC2, 12SD2	12 x 19 1/2"	24	3" FLANGE	220	833
12SD3, 12SD3	12 x 29 1/4"	36			
12SD4	12 x 39"	48			
FL12	12 x 19 1/2"	24			
	12 x 29 1/4"	36			
	12 x 39"	48			
PL12	12 x 29 1/4"	36			
22SD3/22DC3	22 x 29 1/4"	66	4" FLANGE	380	1440
22SD4/22DC4	22 x 39"	88			
FL14	18 x 29 1/4"	54			
	18 x 39"	72			
PL14	18 x 29 1/4"	54			
FL16	24 x 29 1/4"	72	6" FLANGE	870	3290
	24 x 39"	96			
PL16	24 x 29 1/4"	72			
FL20	36 x 29 1/4"	108			
	36 x 39"	144			
PL20	36 x 29 1/4"	108			
FL24	52 x 29 1/4"	156			
	52 x 39"	208			
PL24	52 x 29 1/4"	156			
FL30	85 x 29 1/4"	255	8" FLANGE	1500	5680
	85 x 39"	340			
PL30	85 x 29 1/4"	255			
* Equivalent single length cartridges ** Based on 10 FPS housing velocity. In most cases, the filter cartridge dictates system flow and pressure drop.					

TABLE 4. - INDUSTRIAL HOUSING SELECTION GUIDE

by EG 8/8/01
ck TB 8/9/01

Industrial Filter Housings

Cuno manufactures a full line (see Table 4 on opposite page) of Beta-Klean compatible standard filter housings to meet most application requirements. Models are available for both air and liquid in a wide range of construction materials, from plastics to ASME Code with 316L stainless steel, to suit a variety of application needs. For more information about CUNO filter housings, consult your local CUNO distributor and ask for the literature listed below.

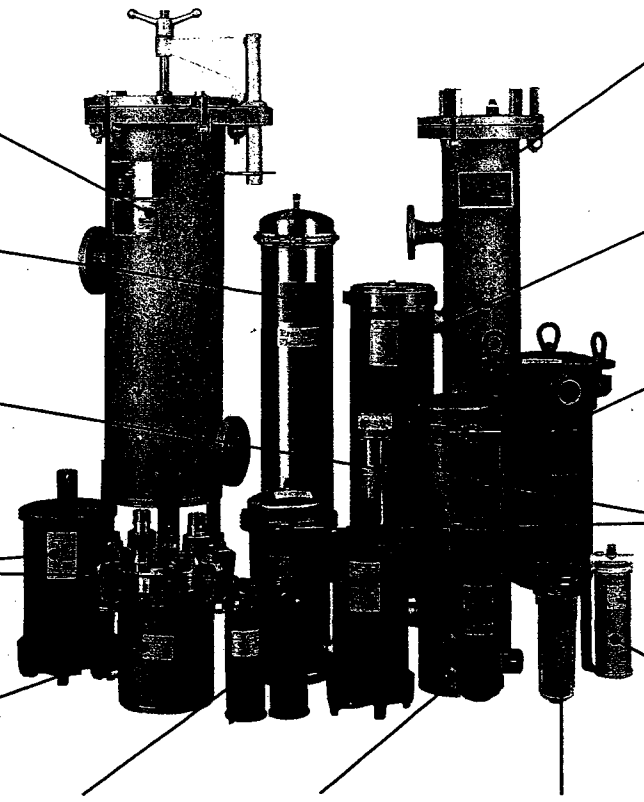

PL Series (LITHSPL1)
- Available in a wide variety of standard industrial designs
- ASME Code
- Choice of carbon steel or 304 stainless steel

SD Housings (LITHSSD1)
- Available in a variety of sizes
- Accepts both single and double open end cartridges

CT Series (LITHSCT3)
- Available in a variety of sizes and materials
- Mounting bracket available

AL Series (LITHSAL1)
- Rugged economical design in cast iron and steel
- Easy assembly

CTG-Klean® (LITHSCK1)
- Enclosed System
- Uses disposable filter pack
- Easy to use - housing clean-up eliminated

Flex Line® (LITHSFL1)
- Maximum design flexibility for a wide variety of system requirements
- ASME Code
- Choice of carbon steel or 316L stainless steel

VC Series (LITHSVC1)
- Polyvinylchloride construction
- Available for 2 or 3 high cartridges

PC Housings (LITHSPC1)
- Features a removable cartridge pack for rapid change-out and easy cleaning
- ASME Code

DC Series (LITHSDC1)
- Available in a wide variety of sizes
- 304 stainless steel construction

1B Housing (LITHSIB1)
- Available in cast iron and steel, or 304 stainless steel
- Choice of 1 or 2 high cartridge models

1BD Housing (LITHSBD1)
- Available in cast iron and steel, or 304 stainless steel
- Built-in valve for duplex or single operation

1H Housing (LITHSIH1)
- Ideal for high pressure applications
- Durable steel construction

1M Housing (LITHSIM1)
- Lightweight plastic construction
- Choice of 1 or 2 high cartridge models

EXAMPLE USING TABLES 2 AND 4 FOR FILTER SIZING

Table 2 (BETA-KLEAN FLOW RATES) and Table 4 (INDUSTRIAL HOUSING SELECTION GUIDE) can be used to determine the appropriate size housing for use with your system. After selecting the filter cartridge and calulating the number of equivalent single length (EQSL) cartridges required to achieve the desired flow and pressure drop, use Table 4 to select the housing suited to your process. Note: In most cases, the filter cartridge dictates system flow and pressure drop.

Example: Calculate Flow per EQSL and select housing

Process Parameters:
- FLUID: Water
- FLOW: 140 gpm
- FILTRATION REQUIRED: 10 µm ABSOLUTE
- PER CARTRIDGE PRESSURE DROP REQUIRED: ≤ 1.0 psi

STEP 1. From Table 2, a Z8100 (10µm) Beta-Klean gives 4 gpm/cartridge maximum recommended flow and a specific pressure drop of 0.2 psi/gpm for each 10" cartridge.

STEP 2. At 4 gpm/cartridge, the initial pressure drop will be:

4 x 0.2 = 0.8 psi

This is well within the specified limit of 1 psi. Therefore:

140 gpm ÷ 4gpm/EQSL = 35 EQSL

A total of 35 EQSL (35 x 10", 18 x 20", 12 x 30", or 9 x 40" cartridges) will meet the suggested 4 gpm/EQSL flow rate

STEP 3. From Table 4, a FL12 housing holds 12 (30") cartridges and will easily accommodate the 140 gpm system flow. (Other housings listed in Table 4 will also meet these requirements.)

by CB 8/18/01
CL JB 8/19/01

18/18

Beta-Klean Ordering Guide

CTG. TYPE	LENGTH*	GRADE	SURFACE	PACKAGING **	TEMPERATURE OPTION	END MODIFICATION	GASKET/O-RING
BK - BETA-KLEAN	09 - 9 ¾" 10 - 10" 19 - 19 ½" 20 - 20" 29 - 29 ¼ 30 - 30" 39 - 39" 40 - 40"	Z8050 Z8070 Z8100 Z8140 Z8150 Z8200 Z8300 Z8400 Z8500 Z8700	G - GROOVED U - UNGROOVED	1 - STANDARD SHRINK WRAP 2 - BULK PACK	S - STANDARD H - HIGH TEMP.	C - 222 O-RING & SPEAR F - 222 O-RING & FLAT CAP K - 222 O-RING, RETAINING CLIP & FLAT CAP N - NONE P - POLYPROPYLENE CORE EXTENDER S - SS CORE EXTENDER	A - SILICONE B - FLUOROCARBON C - EPR D - NITRILE G - VOLARA GASKET*** N - NONE

* Lengths are multiples of either 9 3/4" or 10". ** All 39" and 40" cartridges poly bagged. ***Required for grades Z8050 through Z8140

Notes on End Modification Ordering

Double Open-End (DOE) Cartridges

DOE without end modification or gasket: N - N

DOE with flat gasket: N - G

Single Open-End (SOE) O-Ring Style End Modifications

C - Code 8 style end modification (222) double o-ring connector with locating spear for use with standard plug-in style housing diaphragms and positioning plates.

F - Code 3 style end modification (222) double o-ring connector with flat cap for use with standard plug-in style housing.

K - 222 style o-ring connector with one o-ring and retaining clip for use with the 7PC housing

Core Extenders - For proper alignment and cartridge centering in competitive housings

P - Polypropylene extender for applications where compatible

S - Stainless Steel extender for chemical compatibility and for high temperatures > 180°F (82°C)

Applications Support - SASS

Cuno's Scientific Applications Support Services (SASS) is staffed by scientists and engineers, with state-of-the-art laboratory facilities. The SASS staff, familiar with a wide range of filtration and separation applications, work closely with the customer to recommend the most effective and economical Cuno filtration systems.

WARRANTY

Seller warrants its equipment against defects in workmanship and material for a period of 12 months from date of shipment from the factory under normal use and service and otherwise when such equipment is used in accordance with instructions furnished by Seller and for purposes disclosed in writing at the time of purchase, if any. Any unauthorized alteration or modification of the equipment by Buyer will void this warranty. Seller's liability under this warranty shall be limited to the replacement or repair, F.O.B. point of manufacture, of any defective equipment or part which, having been returned to the factory, transportation charges prepaid, has been inspected and determined by the Seller to be defective. THIS WARRANTY IS IN LIEU OF ANY OTHER WARRANTY, EITHER EXPRESSED OR IMPLIED, AS TO DESCRIPTION, QUALITY, MERCHANTABILITY, FITNESS FOR ANY PARTICULAR PURPOSE OR USE, OR ANY OTHER MATTER. Under no circumstances shall Seller be liable to Buyer or any third party for any loss of profits or other direct or indirect costs, expenses, losses or consequential damages arising out of or as a result of any defects in or failure of its products or any part or parts thereof or arising out of or as a result of parts or components incorporated in Seller's equipment but not supplied by the Seller.

Your Local CUNO Distributor:

Service Worldwide

CUNO®

Fluid Purification

Cuno Incorporated
400 Research Parkway
Meriden, CT 06450, U.S.A.
Tele: (203) 237-5541
Fax: (203) 238-8977

CUNO Pacific Pty., Ltd.
140 Sunnyholt Road
Blacktown, N.S.W. 2148
Australia

CUNO Filtration Asia Pte. Ltd.
1 Tech Park Cresent
Singapore 638131

CUNO Europe S.A.
Chemin Du Contre Halage
62730 - Les Attaques
France

CUNO Srl
Via Tonale n°3
20037 Paderno Dugnano
Italy

CUNOGmbH
Wihl-Th-Römheld - Str. 32
55130 Mainz
Germany

CUNO K.K.
Hodogaya Station
Building 6F
1-7 Iwai-cho, Hodagaya-ku
Yokohama 240 Japan

CUNO Latina Ltda.
Rua Amf Do Brasil 251
18120 Mairinque-Sp
Brazil

© Copyright CUNO Incorporated, 1995 - All Rights Reserved

CALCULATION COVER SHEET

PROJECT New Bedford Harbor Superfund Site OU#1

SUBJECT Liquid Phase GAC System (LC-501/502/503) Sizing

CLIENT U.S. Army Corps of Engineers – New England District (USACE – NED)

CALCULATION NO. P-13 PROJECT NO. 5197.1720.3392

NO OF SHEETS 4 DESIGN LEVEL _____

CALCULATION BY OTHERS _____ YES X NO

PREPARER E. Griffin

REVIEWED BY _____ DATE 10-30-01

ASSUMPTIONS THAT REQUIRE CONFIRMATION _____ YES X NO

ASSUMPTIONS CONFIRMED BY _____ DATE _____

PRINT NAME, DATE AND INITIAL

Rev No	Affected Sheets	Prepared by Date	Checked by Date	Verified by Date

FOSTER WHEELER ENVIRONMENTAL CORPORATION

BY Eb DATE 7/30/01 SHEET 2 OF 8

CHKD. BY JB DATE 8/1/01 OFS NO. DEPT. NO.

CLIENT USACE

PROJECT New Bedford Harbor Superfund Site

SUBJECT Carbon Adsorption

GIVEN:
- Calgon Model 10 Adsorption System
- vessel diameter = 10 ft
- carbon volume = 715 ft^3 (20,000 lbs)
- Max flow rate = 700 gpm / vessel

ASSUME: wastewater flow rate Q = 700 gpm

CALCULATE:

1. Empty bed contact time (EBCT) = $\forall / Q$

$\forall$ = 715 ft^3 x 2 (2 vessels in series) = 1430 ft^3

Q = 700 gpm

$$EBCT = \frac{1430\ ft^3}{700\ gpm} \cdot \frac{7.48052\ gal}{ft^3} = \boxed{15.3\ min}$$

2. Loading rate = Q/A

$$A = \frac{\pi (10\ ft)^2}{4} = 78.5\ ft^2 \quad ; \quad Q = 700\ gpm$$

$$\text{loading rate} = \frac{700\ gpm}{78.5\ ft^2} = \boxed{8.9\ gpm/ft^2}$$

3. Carbon usage / change-out period:

given: 3500 gal wastewater / lb carbon (Pilot Scale Treatment)

$$\left(\frac{3500\ gal\ wastewater}{lb\ carbon}\right)\left(\frac{20{,}000\ lb\ carbon}{1}\right)\left(\frac{min}{700\ gal}\right)\left(\frac{hr}{60\ min}\right)\left(\frac{day}{24\ hr}\right) =$$

$\boxed{69\ days}$

CALGON

CALGON CARBON CORPORATION

MODEL 10 ADSORPTION SYSTEM

ACTIVATED CARBON PRODUCT BULLETIN

DESCRIPTION

The Calgon Model 10 Adsorption System has been designed for the removal of soluble organic chemical contaminants from water or wastewater using granular activated carbon products. The system is particularly suitable for applications with low levels of organic contaminants or with flow rates up to 700 gallons per minute per vessel.

The Model 10 unit is a complete water treatment system, skid mounted for ease of installation, and is provided with piping for series or parallel operation. The skid feature allows rapid installation because only the steel skid must be attached to a foundation, while the adsorption vessels and piping are then attached to their proper location on the steel framework.

The Model 10 system is provided with pre-assembled piping sections for influent and treated water, utility water and compressed air, carbon transfer and venting operations. Water and utility piping need only be brought to the Model 10 and connected to complete the installation of the treatment process.

The Model 10 adsorber vessels are ASME coded for 75 psig, lined for corrosion resistance and are designed to contain 20,000 lbs of Calgon Carbon's granular activated carbon. Carbon transfer piping allows use of Calgon Carbon's convenient carbon service including special transfer trailers. At a flow rate of 350 gpm, each adsorber provides 15 minutes contact time.

Your Calgon Carbon Technical Sales Representative can help you evaluate the suitability of the Model 10 to satisfy your requirements. If needed, adsorption evaluation tests or studies to determine applicability and economics can be arranged. Calgon Carbon offers adsorption equipment in many other sizes, and carbon supply and exchange services to meet your particular needs.

FEATURES

- Proven design—downflow fixed bed adsorption.
- Pre-engineered package—simple and quick installation.
- ASME code vessels compatible with Calgon Carbon Service.
- Vinyl Ester Resin lined vessels suitable for potable water.
- Pipe sizes are designed for the flow rate desired.
- Distributor underdrain for even distribution.
- Manway for maintenance access.
- Backwash capability can be added if suspended solids are present.
- Designed to minimize operating labor and avoid manual handling of carbon.
- Designed for complete removal of exhausted carbon to minimize problems with contaminated material remaining in vessel.
- Capable of bulk carbon filling and removal.
- Granular activated carbon fill and discharge piping.

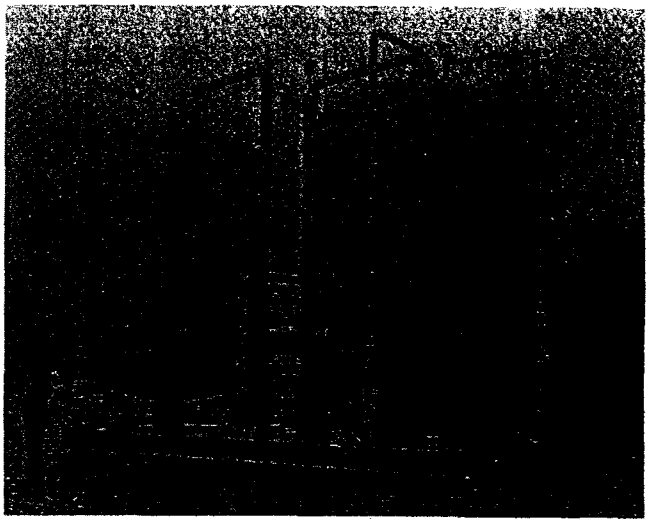

AVAILABLE AUXILIARY SERVICES

- Calgon Carbon Service

OPTIONAL OPERATION MODES

- Downflow fixed bed or
  Downflow fixed bed with backwash capability.
- Series or Parallel flow.

SPECIFICATIONS

Vessel Diameter:	10 ft
ASME Code:	Design 75 PSIG @ 150° F (higher pressure vessel ratings available)
Pipe Connections:	Process pipe: Sized per flow rate; flange connection std. Water pipe: 1-1/2-inch flange
Carbon Volume per Vessel:	715 cu.ft. (nominal 20,000 lbs-granular activated carbon)
Weight:	Empty—38,000 lbs.; Operating—230,000 lbs.
Pressure Relief:	72 PSIG nominal setting
Backwash Rate:	1000 GPM (if required)
Transfer Mode:	Air pressurized slurry transfer

TYPICAL FLOW RATES AND CONTACT TIME

Series Operation		Parallel Operation	
GPM	Contact Time Minutes	GPM	Contact Time Minutes
350	30	700	15

NOTE: Smaller Calgon Carbon Service Systems are available for smaller flow rates and lower carbon usage applications.

© Calgon Carbon Corporation 10/89

MATERIALS OF CONSTRUCTION AND AVAILABLE OPTIONS

- Vessel Lining: Vinyl Ester coating (nominal 40 mil) suitable for potable water and most wastewater applications.
- Piping and Valves: Carbon steel piping and cast iron butterfly valves (process) and stainless steel ball valves (carbon transfer).
- Optional flanged polypropylene lined piping with diaphram valves for process water.
- Underdrain Collection System: Polypropylene slotted nozzles.
- External Coating: Epoxy Mastic Coating
- Optional polyurethane coating system for more corrosive environments.

CAUTION

Wet activated carbon preferentially removes oxygen from the air. In closed or partially closed containers and vessels, oxygen depletion may reach hazardous levels. If workers are to enter a vessel containing carbon, appropriate sampling and work procedures for potentially low-oxygen spaces should be followed, including all applicable Federal and State requirements.

For information regarding human and environmental exposure, call (412) 787-6700 and request to speak to Regulatory and Trade Affairs.

Calgon Carbon Corporation reserves the right to change specifications without notice for components of equal quality.

For additional information, contact Calgon Carbon Corporation, Box 717, Pittsburgh, PA 15230-0717 Phone (412) 787-6700

CALGON

CALGON CARBON CORPORATION

Printed in U.S.A.

CALGON
CALGON CARBON CORPORATION

MODEL 10
MODULAR CARBON ADSORPTION SYSTEM

DESCRIPTION

The Calgon Carbon Model 10 is an adsorption system designed for the removal of dissolved organic contaminants from liquids using granular activated carbon. The modular design concept allows selection of options or alternate materials to best meet the requirements of the site and treatment application.

The Model 10 system is delivered as two adsorbers and a compact center piping network, requiring only minimal field assembly and site connections. An optional mounting skid is available to facilitate installation. The pre-engineered Model 10 design assures that all adsorption system functions can be performed with the provided equipment.

The process piping network for the Model 10 accommodates operation of the adsorbers in parallel or series (with either adsorber placed in first stage). The piping can also isolate either adsorber from the flow. This permits carbon exchange or backwash operations to be performed on one adsorber without interrupting treatment.

The unique internal cone under-drain design provides for the efficient collection of treated water and the distribution of backwash water. The internal cone also insures efficient and complete discharge of spent carbon from the adsorber. The Model 10 system is designed for use with Calgon Carbon's closed loop carbon exchange service. Using special designed trailers, spent carbon is removed from the adsorbers and returned to Calgon Carbon for reactivation. The trailers also recharge the adsorbers with fresh activated carbon.

SYSTEM SPECIFICATIONS

Carbon adsorbers:

- Carbon steel ASME code pressure vessels.
- Internal vinyl ester lining (nominal 35 mil) where GAC contacts steel, for potable water and most liquid applications.
- Polypropylene slotted nozzles for water collection and backwash distribution.

Standard adsorption system piping:

- Schedule 40 carbon steel process piping with cast iron fittings.
- Cast iron butterfly valves for process piping.
- PPL lined steel pipe for GAC discharge.
- Full bore stainless steel ball valves for GAC fill and discharge.

System external coating:

- Epoxy mastic paint system

Available options:

- Unifying system skid.

- In-bed water sample collection probes.

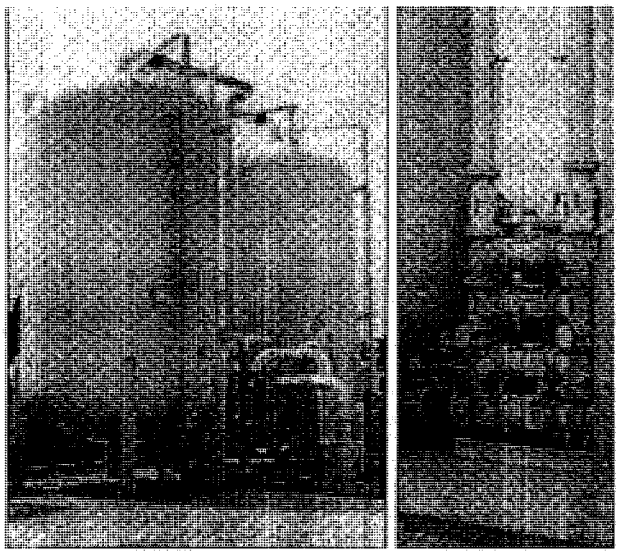

OPERATING CONDITIONS

Carbon per adsorber:	20,000 lbs. (9080 kg)	
Pressure rating:	125 psig (862 kPa)	
Pressure relief:	Graphite rupture disk (94 psig)	
Vacuum rating:	14 psig	
Temperature rating:	150°F maximum (65°C)	
Backwash rate:	Typical 1000 gpm (30% expansion)	
Carbon transfer:	Air pressure slurry transfer	
Utility air:	100 scfm at 30 psig (reduce to 15 psig for trailer)	
Utility water:	100 gpm at 30 psig	
Freeze protection:	None provided; enclosure or protection recommended	

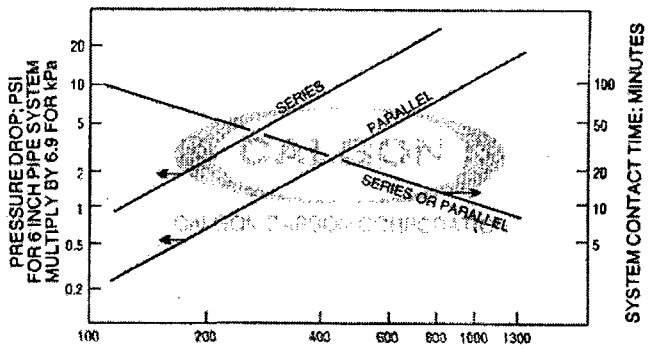

TOTAL FLOW TO SYSTEM; GPM
WATER AT 60°F
MULTIPLY BY 0.227 FOR M^3/HR

DIMENSIONS AND FIELD CONNECTIONS

by EG 7/30/01
CK JB 8/1/01

Adsorber vessel diameter:	10 ft. (3050 mm)
Process Pipe:	6 in. or 8 in.
Process Pipe connection:	125# ANSI flange
Utility water connection:	3/4 in. hose connection
Utility air connection:	3/4 in. hose connection
Carbon hose connection:	4 in. Kamlock type
Carbon dry fill:	top 8" nozzle
Backwash connections:	6 in. or 8 in. flange
Drain/vent connection:	6 in. or 8 in. flange
Adsorber maintenance access....	20 in. round flanged man-way, 14 in. x 18 in. man-way below cone
Adsorber shipping weight:	18,500 lbs. (empty) (8400 kg)
System operating weight:	215,000 lbs. (97,610 kg)

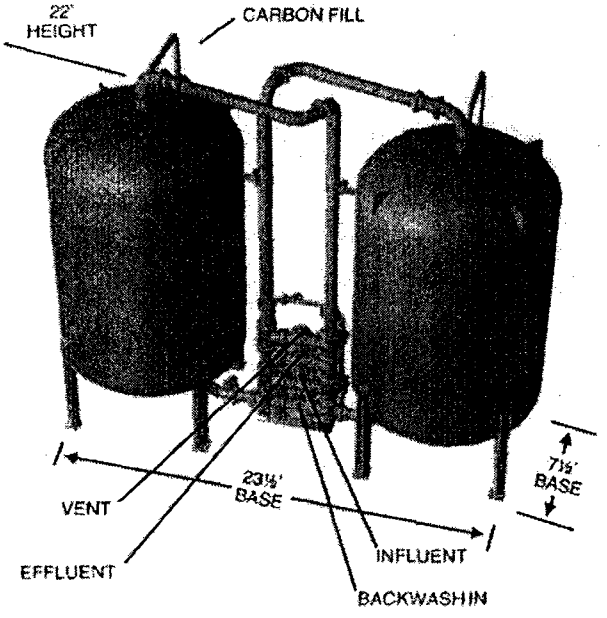

Model 10 Adsorption System

CAUTION

Wet activated carbon preferentially removes oxygen from air. In closed or partially closed containers and vessels, oxygen depletion may reach hazardous levels. If workers are to enter a vessel containing carbon, appropriate sampling and work procedures for potentially low-oxygen spaces should be followed, including all applicable federal and state requirements.

SAFETY MESSAGE

Wet activated carbon preferentially removes oxygen from air. In closed or partially closed containers and vessels, oxygen depletion may reach hazardous levels. If workers are to enter a vessel containing carbon, appropriate sampling and work procedures for potentially low oxygen spaces should be followed, including all applicable federal and state requirements.

1-800-4-CARBON
www.calgoncarbon.com

Domestic Sales Offices

East Coast Region

West Coast and Rockies Region
Monterey, CA 93940-5372
Tel (831) 656-1650
Fax (831) 656-1656

International Sales Offices

Australasia / Philippines / Southeast Asia
Calgon Carbon Asia
Singapore Office

Europe
Chemviron Carbon
Zoning Industriel de Feluy
B-7181 Feluy, Belgium

Flemington, NJ 08822-5712
Tel (908) 237-4600
Fax (908) 237-4646

Midwest Region
Pittsburgh, PA
Tel (412) 787-6700
1-800-4-CARBON
Fax (412) 787-6676

Gulf Coast Region
Houston, TX 77092-8815
Tel (713) 690-2000
(713) 686-9690
Fax (713) 690-7909

Tel (65) 221-3500
Fax (65) 221-3554

Tel 32 64 51 18 11
Fax 32 64 54 15 91

Canada
Calgon Carbon Canada, Inc.
Bolton, Ontario
Tel (905) 857-9915
Fax (905) 857-9984

Japan
Calgon Far East
Tokyo Office
Tel 81 3 3582 1861
Fax 81 3 3586 9266

China / Korea / Taiwan
Calgon Carbon Asia
Tokyo Office
Tel 81 3 3560 7505
Fax 81 3 3584 7202

Latin America
Houston, TX 77092-8815
Tel (713) 690-2000
(713) 686-9690
Fax (713) 690-7909

CALGON

CALGON CARBON CORPORATION

Calgon Carbon Corporation's activated carbon products are continuously being improved and changes may have taken place since this publication went to press.

Copyright (c) 2000 - Calgon Carbon Corporation - All rights reserved.

CALCULATION COVER SHEET

PROJECT New Bedford Harbor Superfund Site OU#1

SUBJECT Sump Pump (P-601) Sizing

CLIENT U.S. Army Corps of Engineers – New England District (USACE – NED)

CALCULATION NO. P-14 PROJECT NO. 5197.1720.3393

NO OF SHEETS 8 DESIGN LEVEL _____

CALCULATION BY OTHERS _____ YES X NO

PREPARER J. Brinkman

REVIEWED BY [signature] DATE 6/21/02

ASSUMPTIONS THAT REQUIRE CONFIRMATION _____ YES _____ NO

ASSUMPTIONS CONFIRMED BY _____ DATE _____

PRINT NAME, DATE AND INITIAL

Rev No	Affected Sheets	Prepared by Date	Checked by Date	Verified by Date

I. Scope and Purpose

Determine the head requirements for Sump Pumps (P-601 A/B.

II. References

1. Literature

   a) Flow of Fluids Through Valves, Fittings and Pipe (Technical Paper No. 410), Crane Company, 1988; 25th Printing (1991).

2. Documents

   a) "Basis of Design/Design Analysis (BD/DA) Report for Water Treatment Plant", New Bedford Harbor Superfund Site – Operable Unit #1, November 2001. USACE Contract # DACW33-94-D-0002, Task Order #17.

   b) Drawing M-102: General Arrangement Equipment – New WTP

   c) Drawing M-604: Piping and Instrumentation Drawing – Chemical Feed Systems

   d) Zoeller Pump Co. Performance Curves

III. Assumptions

- Flow rate is 100 gpm,
- Schedule 40 steel pipe, which will result in conservative pressure drop values compared to PVC.
- Pipe routing based on equipment general arrangement shown on M-102
- Discharge pipe diameter of 2 inches.
- Water will be pumped from sump to the Slurry Holding Tank (TK-101)

IV. Solution

To determine pump head requirements for sump pumps (P-601 A/B) use Bernoulli's Theorem (Equation #1) to construct system curves.

Equation #1 $$\Delta H = \Delta P(144/\rho) + \Delta Z + \frac{(V_2^2 - V_1^2)}{2g} + h_L$$ Crane p. 3-2

where: ΔH = total head difference, ft (H_2O)
ΔP = total pressure difference, lbs/in^2 (psi)
ρ = density of fluid, lbs/ft^3
ΔZ = difference static head, ft
V = velocity, ft/sec
g = acceleration of gravity, 32.2 ft/s^2
h_L = frictional head loss, ft (Equation #2)

Friction Losses (h_L):

Equation #2 $h_L = \frac{0.00259KQ^2}{d^4}$ Crane p. 3-4

where: K = resistance coefficient
Q = flowrate, gpm
d = diameter of pipe, inches

Resistance Coefficient (K):

Defined below in Table 1. K values for pipe fittings are taken from Crane Appendix A (pgs A-26 through A-29)

Pipe sizes and estimated lengths based on design drawings (attached) are provided in Table 2.

Schematic of pump flow diagram is presented in Figure 1.

Table 1 – K Values for Pipe Fittings

Location	Elements Effecting P In Pipe	Quantity	Element K-Factor	F_T	Extended K-Factor
Suction	Entrance	1	0.78		0.78
Discharge	2" Check Valve	1	$50f_T$	0.019	0.95
	2" elbow	5	$30f_T$	0.019	2.85
	2" Exit	1	1.0		1.0

Where:
f_T = friction factor in zone of complete turbulence
K factor for reducers/enlargements used Formula 3 on page A-26 of Cranes

Table 2 – Pipe Sizes and Lengths

Location	Size (inches)	Origin	Terminate	Length (feet)
Suction	2	Sump	P-601	1
Discharge	2	P-601	to TK-101	41

1. PIPE

a) Determine resistance coefficient (K) for pipe

Equation #3 K = f (L/D) Crane p. 3-4

Where:

f = friction factor based on reynolds number (R_e)
L = Length of pipe, feet
D = pipe diameter, feet

Equation #4 Reynolds Number (R_e) = 50.6($Q\rho/d\mu$)

Where:

Q = rate of flow, gpm
ρ = weight density of fluid, lbs/ft^3 (62.37 lbs/ft^3 @ 60 °F)
d = internal diameter of pipe, inches
μ = absolute (dynamic) viscosity, centipoise (1.129 cP @ 60 °F)

R_e (@ 100 gpm) = 50.6(100*62.37)/(2*1.129) = 139,766

Friction factors (f) from Cranes Appendix A (A-25) for 2" pipe

f (@100 gpm) = 0.021

b) Determine Resistance Coefficients (K) for pipe at various flows (pipe lengths from Table 2)

K (@100 gpm) = 0.021*(42/(2/12)) = 5.29

2. Pipe and Fittings

a) Determine K- Factor for 2" pipe and fittings

K (@100 gpm) = (0.78 + 0.95 + 2.85 + 1.0) + 5.29
= (5.58) + 5.29
= 10.87

FOSTER WHEELER ENVIRONMENTAL CORPORATION

BY JJB DATE 06/20/02 SHEET 5 OF 8

CHKD. BY 96 DATE 06/21/02 OFS NO. 5197.1720.3393.00010 DEPT. NO.

CLIENT USACE

PROJECT NEW BEDFORD HARBOR WATER TREATMENT FACILITY

SUBJECT SUMP PUMP (P-601) SIZING

3. Frictional Head loss (pipe & fittings)

Equation #5 $h_L = h_{L\,(2\ inch}$

$$h_{L\,(100\ gpm)} = \frac{0.00259KQ^2}{d^4} =$$

$$h_L = \frac{0.00259(10.87)(100)^2}{(2)^4}$$

$$= 18\ ft$$

6. Total Head Losses

$H_{100} = 18\ ft + 18\ ft = 36$ feet

Assume 40 feet of head losses

FIGURE 1: SUMP PUMP FLOW DIAGRAM
NEW BEDFORD HARBOR WTP

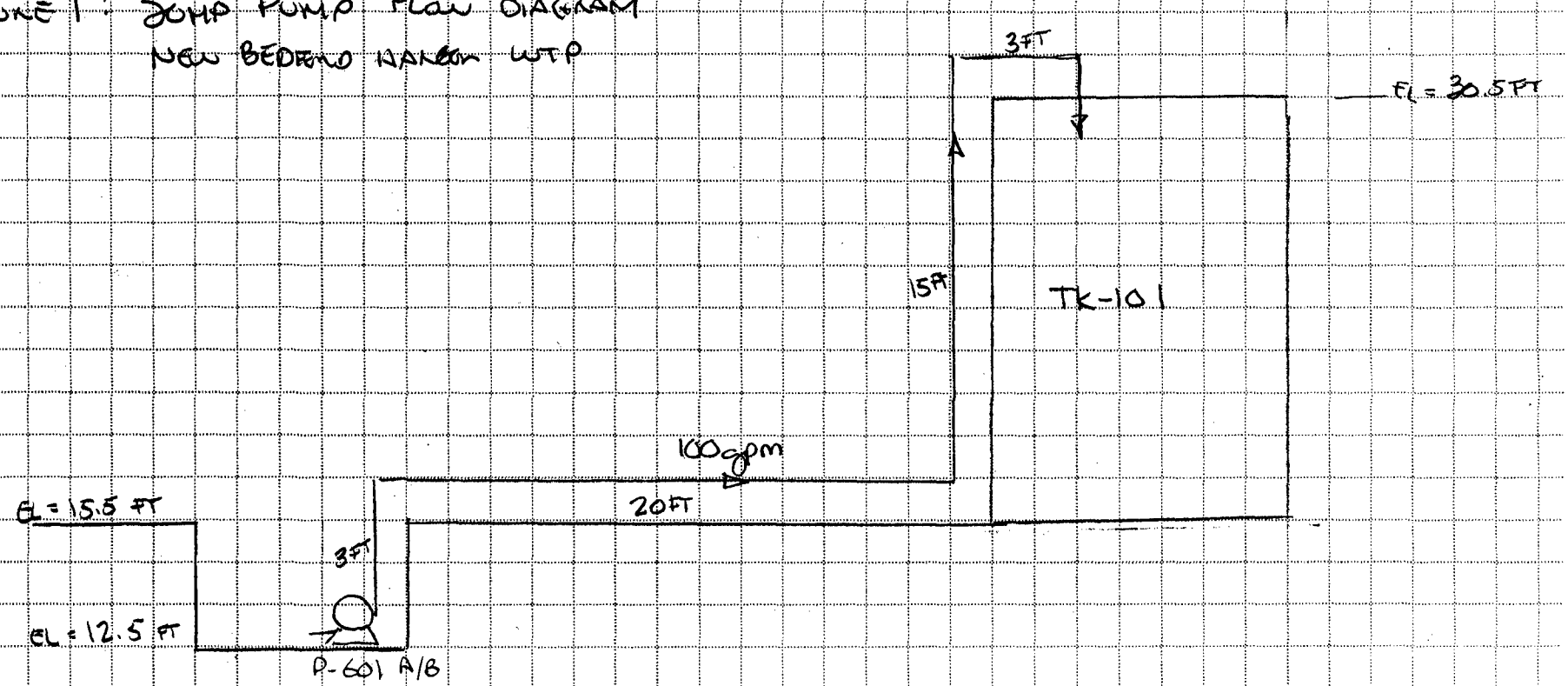

Ind: GC 6/21/02 JB 6-20-02

8/8

FOSTER WHEELER

FORM 6906-5

SECTION: 2.20.060
FM0659
1299
Supersedes
1297

"Quality Pumps Since 1939"

Product information presented here reflects conditions at time of publication. Consult factory regarding discrepancies or inconsistencies.

ZOELLER PUMP CO.

MAIL TO: P.O. BOX 16347 • Louisville, KY 40256-0347
SHIP TO: 3649 Cane Run Road • Louisville, KY 40211-1961
(502) 778-2731 • 1 (800) 928-PUMP • FAX (502) 774-3624

visit our web site:
http://www.zoeller.com

185 - 186 - 188 - 189 Single Seal Series
4185 - 4186 - 4188 - 4189 Double Seal Series
191 Single Seal Drip Pump

(For Pump Prefix Identification see News & Views 0052)

HIGH HEAD "FLOW-MATE"

FOR SEPTIC TANK • LOW PRESSURE PIPE (LPP)
AND ENHANCED FLOW STEP SYSTEMS

EFFLUENT

OR DEWATERING PUMP • SUBMERSIBLE
1½" NPT DISCHARGE STANDARD • 2" or 3" FLANGE AVAILABLE

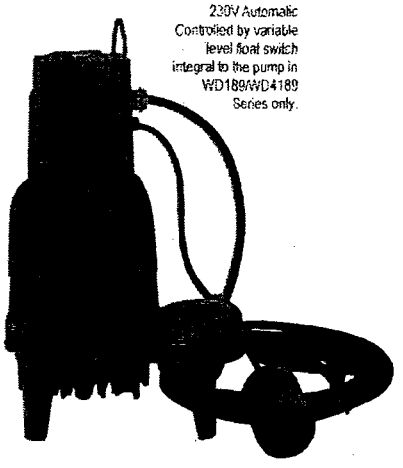

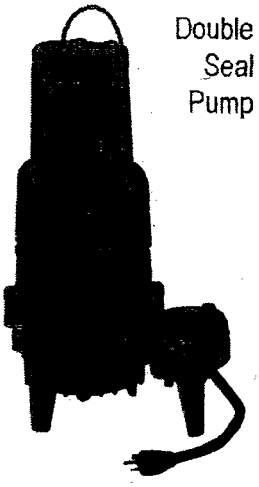

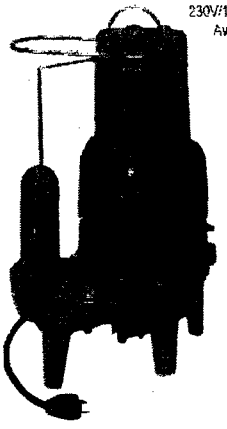

POWDER COATED TOUGH™

COMPARE THESE FEATURES

- Non-clogging vortex impeller design bronze class 88-8-0-4 (180 Series).
- Enclosed impeller design (191 Series).
- Float operated, submersible (NEMA 6) 2-pole mechanical switch.
- Durable cast construction. Cast iron switch case, base, motor and pump housing. No sheet metal parts to rust or corrode.
- Stainless steel screws, bolts, float rod, handle, guard, arm and seal assembly.
- 20' UL-listed 3-wire neoprene cord and plug. Extra cord lengths available in 25-35-50 foot length only.
- Motor - 60 cycle, 3450 RPM, oil-filled, hermetically sealed, automatic reset, thermal overload protected (1 PH only).
- Maximum temperature for effluent or dewatering 130° F. 54° C, WD189 120° F (49° C).
- Variable level control systems available.
- Square Ring & Gasket - Neoprene.
- Shaft Seal - Stainless steel carbon & ceramic rotary.
- Upper sleeve bearing and lower ball bearing running in bath of oil.
- All 180/4180 series pass ¾-inch solids (sphere). Model 191 pump passes ⅝- inch solids (sphere).
- On point 14¾" • Off point 5" (automatic units).
- Major width 12¾" • Height 18 9/16". (Single seal pumps)
- 1½" NPT discharge with 2" or 3" flange available. (Model 191 is not availiable with 3" flange)
- Corrosion resistant powder coated epoxy finish.

MODELS 4185-4186-4188-4189 DOUBLE SEAL PUMPS (Nonauto only)

- Protects motor from seal leaks.
- Improved bearing lubrication.
- Helps eliminate seal and bearing damage from dry runs.
- Major width 12 ¾". Height 20 7/16".

Note: The sizing of effluent systems normally requires variable level float(s) controls and properly sized basins to achieve required pumping cycles.

AUTOMATIC UNITS NOT RECOMMENDED FOR USE IN EFFLUENT SYSTEMS

*NOTE: No UL Listing for 200/208 1 Phase Pumps, Model 186 & 191, or Double Seal Series.
See Back Page for UL & CSA Listings

Nonautomatic Model for variable level systems

© Copyright 1999 Zoeller Co. All rights reserved.

Model 4188

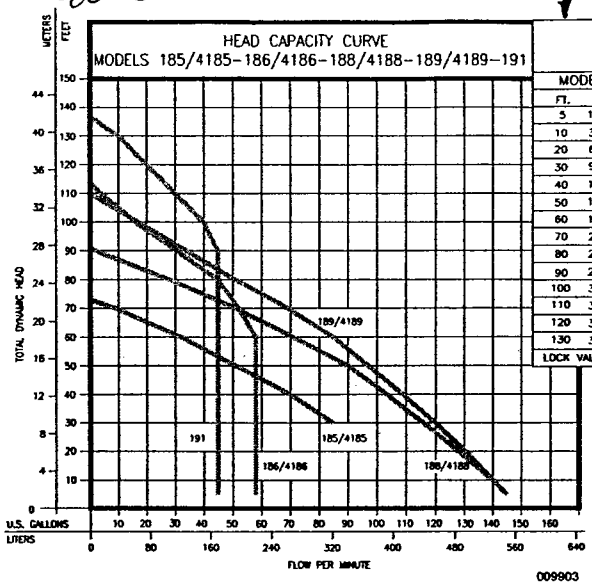

TOTAL DYNAMIC HEAD/ FLOW PER MINUTE EFFLUENT AND DEWATERING

MODEL		185/4185		186/4186		188/4188		189/4189		191	
FT.	M.	GAL.	LTRS.	GAL.	LTRS.	GAL.	LTRS.	GAL.	LTRS.	GAL.	LTRS.
5	1.52			58	220	145	549	145	549	45	170
10	3.05			58	220	140	530	140	530	45	170
20	6.10			58	220	128	484	130.5	494	45	170
30	9.14	85	322	58	220	116	439	120	454	45	170
40	12.19	70	265	58	220	103.5	392	109	413	45	170
50	15.24	51	193	58	220	90	341	97	367	45	170
60	18.29	32	121	58	220	71	269	85	322	45	170
70	21.34	9	34	52	197	51	193	69	261	45	170
80	24.38			45	170	28	106	51	193	45	170
90	27.43			30.5	115	2	8	34	129	45	170
100	30.48			16	60			17	64	40	151
110	32.00			4	15					30	114
120	36.58									20	76
130	39.62									10	38
LOCK VALVE:		73"		114"		91"		110"		137"	

WARNING: Model 185 should not be subjected to heads less than 30 feet TDH.

Single Seal-180 Series Automatic Design Weight 82-89 lbs.

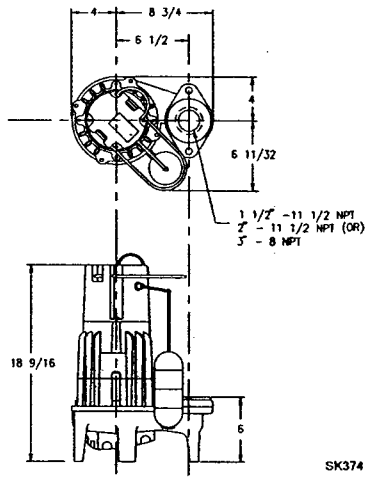

185 MODELS	4185 MODELS	Standard all models - 20 ft. cord - 1 H.P.			Control Selection			Listings	
Single Seal	Double Seal	Volts -	Ph	Mode	Amps	Simplex	Duplex	CSA	UL
D185	—	230	1	Auto	9.8	1 or 1 & 8		Y	Y
E185	E4185	230	1	Non	9.8	2 or 2 & 7	3 or 5 & 6	Y(2)	Y
* H185	—	200-208	1	Auto	11.5	1 & 8		N	N
* I185	* I4185	200-208	1	Non	11.5	2 & 7	3 or 5 & 6	N	N
* F185	* F4185	230	3	Non	7.4	4 & 6	3 & 4 or 5 & 6	Y	Y
* J185	* J4185	200-208	3	Non	7.5	4 & 6	3 & 4 or 5 & 6	Y	Y
* G185	* G4185	460	3	Non	3.7	4 & 6	3 & 4 or 5 & 6	Y	Y
* BA185	—	575	3	Non	3.3	4 & 6	3 & 4 or 5 & 6	Y	N

186 MODELS	4186 MODELS	Standard all models - 20 ft. cord - 1½ H.P.			Control Selection			Listings	
Single Seal	Double Seal	Volts -	Ph	Mode	Amps	Simplex	Duplex	CSA	UL
D186	—	230	1	Auto	13.7	1 or 1 & 8	—	N	N
E186	E4186	230	1	Non	13.7	2 or 2 & 7	3 or 5 & 6	N	N
* F186	* F4186	230	3	Non	9.2	4 & 6	3 & 4 or 5 & 6	N	N
* G186	* G4186	460	3	Non	4.6	4 & 6	3 & 4 or 5 & 6	N	N

188 MODELS	4188 MODELS	Standard all models - 20 ft. cord - 1½ H.P.			Control Selection			Listings	
Single Seal	Double Seal	Volts -	Ph	Mode	Amps	Simplex	Duplex	CSA	UL
D188	—	230	1	Auto	13.3	1 or 1 & 8		N	Y(1)
E188	E4188	230	1	Non	13.3	2 or 2 & 7	3 or 5 & 6	Y(2)	Y(1)
* H188	—	200-208	1	Auto	16.8	1 & 8		N	N
* I188	* I4188	200-208	1	Non	16.8	2 & 7	3 or 5 & 6	N	N
* F188	* F4188	230	3	Non	8.9	4 & 6	3 & 4 or 5 & 6	Y	Y
* J188	* J4188	200-208	3	Non	10.3	4 & 6	3 & 4 or 5 & 6	Y	Y
* G188	* G4188	460	3	Non	4.6	4 & 6	3 & 4 or 5 & 6	Y	Y
* BA188	—	575	3	Non	3.5	4 & 6	3 & 4 or 5 & 6	Y	N

189 MODELS	4189 MODELS	Standard all models - 20 ft. cord - 2 H.P.			Control Selection			Listings	
Single Seal	Double Seal	Volts -	Ph	Mode	Amps	Simplex	Duplex	CSA	UL
⊕ D189	—	230	1	Auto	17.1	1 or 1 & 8		N	Y(1)
⊕ E189	⊕ E4189	230	1	Non	17.1	2 & 7	3 or 5 & 6	Y(2)	Y(1)
* H189	—	200-208	1	Auto	20.5	1 & 8		N	N
* I189	* I4189	200-208	1	Non	20.5	2 & 7	3 or 5 & 6	N	N
* F189	* F4189	230	3	Non	11.2	4 & 6	3 & 4 or 5 & 6	Y	Y
* J189	* J4189	200-208	3	Non	13.2	4 & 6	3 & 4 or 5 & 6	Y	Y
* G189	* G4189	460	3	Non	6.0	4 & 6	3 & 4 or 5 & 6	Y	Y
* BA189	—	575	3	Non	5.8	4 & 6	3 & 4 or 5 & 6	Y	N
⊕ WD189	* WD4189	230	1	Auto	17.1	2 or 2 & 8		N	N

191 MODEL		Standard all models - 20 ft. cord - 2 H.P.			Control Selection			Listings	
Single Seal	Double Seal	Volts -	Ph	Mode	Amps	Simplex	Duplex	CSA	UL
E191	—	230	1	Non	14.5	2 or 2 & 7	3 or 5 & 6	N	N

* No Molded Plug
(1) UL Listed unit available with 20 Amp Plug.
(2) CSA Approval without plug cap.
(3) 20 Amp Outlet, P/N 10-0060 must be used.

Double Seal-4180 Series / Weight 89-94 lbs.

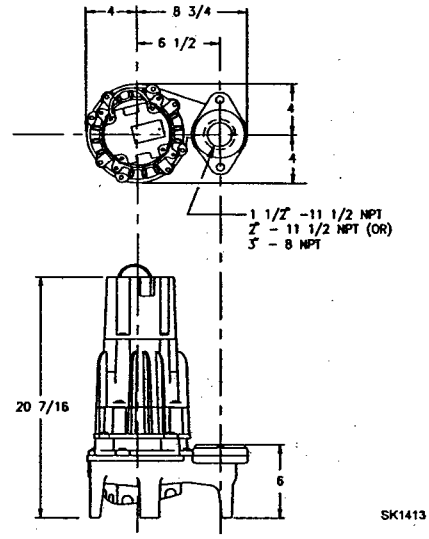

SELECTION GUIDE

1. Integral float operated 2-pole mechanical switch, no external control required.
2. Single piggyback variable level float switch or double piggyback variable level float switch. Refer to FM0477.
3. Mechanical alternator M-Pak 10-0072 or 10-0075. Refer to FM0495
4. Simplex three phase control panel. Refer to FM1228.
5. See FM0712 for correct model of Electrical Alternator.
6. Variable level control switch 10-0225 used as control activator, specify simplex (3) float or duplex (3) or (4) float system.

⚠ CAUTION

All installation of controls, protection devices and wiring should be done by a qualified licensed electrician. All electrical and safety codes should be followed including the most recent National Electric Code (NEC) and the Occupational Safety and Health Act (OSHA).

For information on additional Zoeller products refer to catalog on Piggyback Variable Level Float Switches, FM0477; Electrical Alternator, FM0486; Mechanical Alternator, FM0495; Sump/Sewage Basins, FM0487; Simplex Pump Control, FM1596; Alarm Systems, FM0732; and Disconnect/Rail Systems, FM0787.

RESERVE POWERED DESIGN

For unusual conditions a reserve safety factor is engineered into the design of every Zoeller pump.

© Copyright 1999 Zoeller Co. All rights reserved.

CALCULATION COVER SHEET

PROJECT New Bedford Harbor Superfund Site

SUBJECT Wastewater Treatment Plant, Air Compressor AC-701

CLIENT US Army Corps of Engineers- New England District (USACE- NED)

CALCULATION NO. P-15 PROJECT NO. _____

NO OF SHEETS _____ DESIGN LEVEL _____

CALCULATION BY OTHERS ____ YES ____ NO X PREPARER J Weeks JWW

REVIEWED BY E. LIVESEY DATE 10/2/01

ASSUMPTIONS THAT REQUIRE CONFIRMATION ___ YES ___ NO

ASSUMPTIONS CONFIRMED BY _____ DATE _____

PRINT NAME, DATE AND INITIAL

Rev No	Affected Sheets	Prepared by Date	Checked by Date	Verified by Date

Air Compressor AC-701

Scope And Purpose

Determine the performance requirements for the proposed Waste Treatment Building air compressor, AC-701.

References

Flow Of Fluids Through Valves Fittings, And Pipe (Technical Paper No. 410), Crane Company,1988; 25th Printing (1991).

Heald C. C., Cameron Hydraulic Data, Ingersol-Rand, 17th Printing 2nd edition, (1992).

Documents

Piping And Instrumentation Diagram, Drawing # M-605

General Arrangement Equipment/Layout Process Equipment, Drawing # M-102 (Markup That Includes Elevations Attachment 2)

"Basis of Design/Design Analysis Report Water Treatment System New Bedford Harbor Superfund Site"-Draft August (2001). USACE Contract # DACW33-94-D-0002 Task Order # 17

Curtis, Arrow Pneumatics, and Ultra Filter manufacturers' literature: Attachment 1

Given Criteria

1. Pump DP-101: Air Requirement = 50 scfm @ 50 psig from Pump Calculation

   Pump DP-102: Air Requirement = 10 scfm @ 10 psig from Pump Calculation

   Pump DP-103: Air Requirement = 110 scfm @ 95 psig from Pump Calculation

Assumptions:

1. Air compressor is located in the proposed Waste Treatment Building. Maximum pipe length to the further most pump is 150 ft.

2. Main trunk is 1-1/2" consistent with drawing M-605.

3. Regulators are located as close as possible to each pump.

Air Compressor AC-701

Selection:

The air compressor system total capacity required is 170 scfm at 95 psig

An oil free system is proposed to compress and treat the supply air. The following system components are selected to deliver 170 scfm of air at a minimum pressure of 95 psig:

Compressor: Curtis Model R/S 40-T, 40hp, producing 191 scfm air at 100 psig, or 173 scfm air at 125 psig, tank mounted with a 200 gallon receiver

Water Separator: Quality Air Model AG-Z 0200 Centrifugal Water Separator

Particulate Pre-Filter: Quality Air Model AG 0200 Canister with 50 micron Part # PE-0027 changeable filter element

Coalesing Oil Filter: Quality Air Model AG 0200 Canister with 0.01 ppm Part # SMF-0027 changeable filter element

Dryer: Ultrafilter Buran Type SD 0340, R-134a refrigerated dryer with aftercooler, sized for 200 cfm, producing 34°F_{dp} air (1-1/2" inlet and outlet)

Regulators: Use adjustable 3/4" inlet, 3/4" outlet Arrow Pneumatics Model R376GT MidFlow regulators having a 0 to 160 psig indicator with Model RBK5 mounting brackets.

Brunner Tank Kit to include a 160-lb safety relief valve, pressure gage and tank drain with ball valve

Install the piping distribution system sloped to the furthermost point of distribution. Pipeline filters are not required. Install tee piping takeoffs to each pump at the top of the main header or with a vertical upward flow to minimize condensate carryover. Install adjustable regulators having 3/4" inlets and outlets, drip legs and drains in the supply to each pump.

Compressor design is rotary screw designed to operate at full capacity. The compressor will produce 173 scfm air at 125 psig. The inlet air valve shuts off upon developing approximately 140 psig. The compressor automatically shuts down after 10 minutes if no additional air requirement is detected.

Results Summary

Estimated pressure drops and manufacturer's selection cut sheets are shown in Attachment 1. The system selected which produces 191 scfm air at 100 psig, or 173 scfm air at 125 psig provides the required capacity to operate Pumps DP-101, 102, and 103 while overcoming the estimated pressure losses in the system.

Air Compressor AC-701

Estimate the maximum system pressure loss using the following assumed configuration:

Estimate piping system pressure loss:
Determine Fitting Equivalent Lengths from Cameron, Page 3-121:
Determine Pressure Drops from Crane, Page B-15:

From the table below the largest estimated Piping System Pressure Loss is the main trunk piping plus the supply to Pump DP-103
Pressure Drop = 1.71 + 0.19 + 7.38 = 9.3 psi

Per Manufacturer's Representative, estimate 1.5 psi maximum pressure drop through both filters and 2.0 psi across the drier for a total 3.5 psi pressure drop.

Maximum estimated system pressure loss = 9.3 + 3.5 = 13 psi

Pressure delivered = 125 less 13 or approximately 110 psig

	Quantity	Unit Equiv Length	Total Equiv Length	dp psi per 100 ft	Total Drop psi	
Main Trunk Piping:						
1-1/2" Piping (200 scfm @ 100 psig)	100		100			
Standard Elbow	6	4	24			
Tee (Run or Branch)	2	9	18			
Globe Valve	1	40	40			
Total for Run			182	0.9370	1.71	
Supply to Pump DP-103:						
1-1/2" Piping (125 scfm @ 100 psig)	40		40			
Standard Elbow	2	4	8			
Sudden Contraction (d/D=1/2)	1	1	1			
Total Equiv Length for Run			49	0.3800	0.19	
3/4" Piping (125 scfm @ 100 psig)	10		10			
Standard Elbow	4	2	8			
Tee (Run or Branch)	1	4	4			
Globe Valve	1	20	20			
Regulator (Use Globe Valve)	1	20	20			
Total Equiv Length for Run			62	11.9000	7.38	
Supply to Pump DP-101:						
3/4" Piping (50 scfm @ 50 psig)	60		60			
Standard Elbow	6	2	12			
Tee (Run or Branch)	2	4	8			
Sudden Contraction (d/D=1/2)	1	0.8	1			
Globe Valve	1	20	20			
Regulator (Use Globe Valve)	1	20	20			
Total Equiv Length for Run			121	3.5270	4.26	

Attachment 1

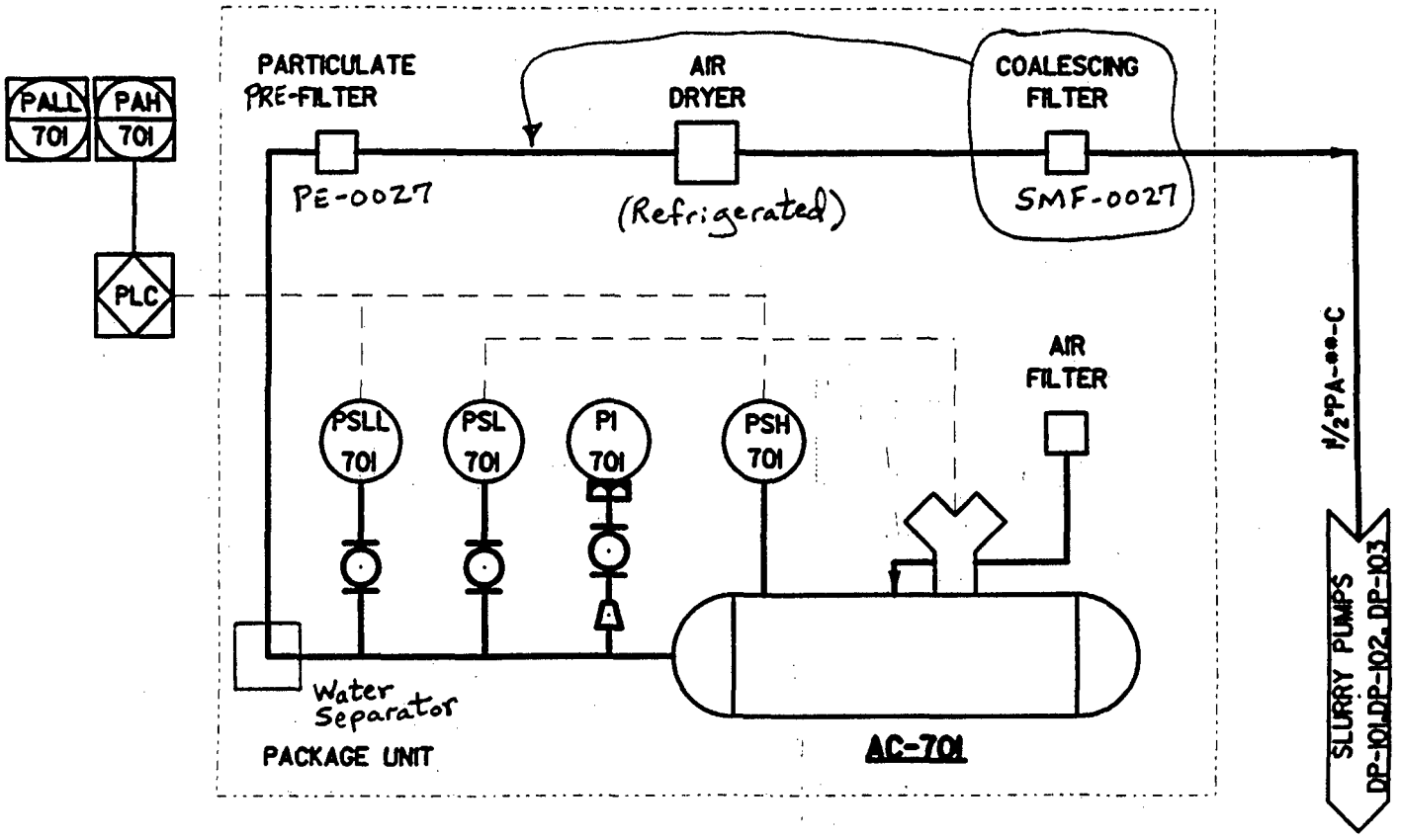

P&ID Diagram
M-605

AC-701

AIR COMPRESSOR

TANK MOUNTED

ROTARY SCREW AIR COMPRESSORS, 10-50 HP

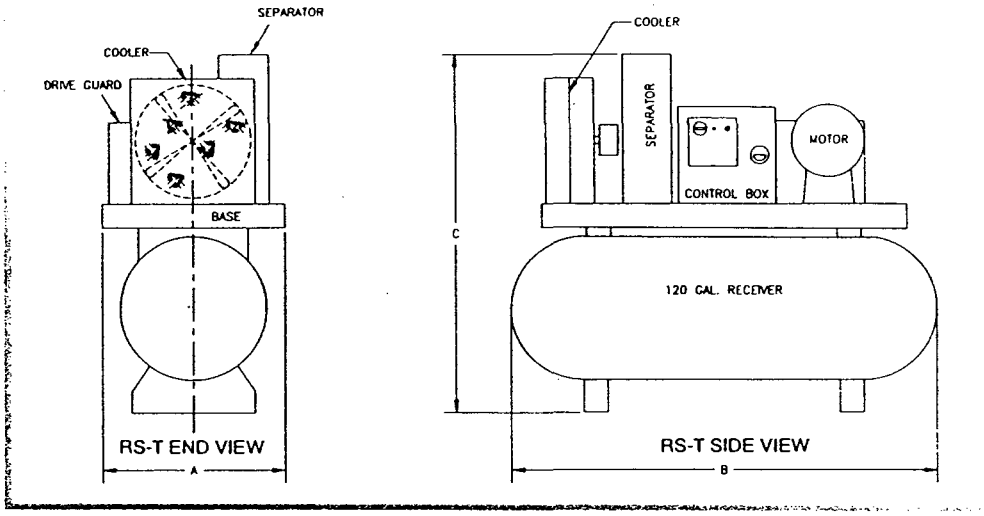

STANDARD EQUIPMENT

- Air End Manufactured to ISO 9001 Standards
- Dry Type Inlet Filter/Silencer
- Oil Filter
- V-Belt Drive
- Drive Guard
- Multi-Stage Oil Separator Unit
- ODP Motor, 60 HZ, 1.15 SF, Tri-Voltage
- Safety Valve on Separator Tank and Air Receiver
- ASME Code Air Receiver
- Pressure Gauge Liquid Filled
- Temperature Gauge
- Side-By-Side Air/Oil Cooler
- Aftercooler
- Nema 1 Control Panel with Starters
- 115 Volt Control Transformer
- Dual Control Switch with Timed Shutdown, 10-50 HP
- Hour Meter
- High Temperature Shut Down Switch with Light
- Oil Level Sight Glass
- Bucket High Tank Drain
- Factory Fill Lubricant
- Vibration Isolators
- Modulating Control on R/S 50-T with Timed Shutdown
- Minimum Pressure Valve
- Start-Stop Buttons on R/S 50-T
- Thermostatic Oil Valve
- High Separator Pressure–Switch
- Load/Unload Switch

SPECIFICATIONS

R/S T MODEL	A IN.	B IN.	C IN.	WT. LBS.	HP	CFM/PSI 100	125	150	175	AIR OUT NPT
R/S 10-T	30	67	60	860	10	42	39	34	28	3/4"
R/S 15-T	30	67	60	875	15	67	58	48	44	3/4"
R/S 20-T	30	75	64	1305	20	88	82	71	61	1"
R/S 25-T	30	75	64	1380	25	108	104	92	80	1"
R/S 30-T	30	75	64	1470	30	140	130	118	97	1"
R/S 40-T	42	75	74	1745	40	191	173	150	129	1 1/4"
R/S 50-T	42	75	80	2170	50	225	212	186	172	1 1/4"

Copyright 1997 Curtis-Toledo, Inc

Distributed by

CURTIS *The Symbol of Quality & Excellence Since 1854*

Curtis-Toledo • 1905 Kienlen Ave • St. Louis, Missouri 63133 • Curtiscomp@aol.com

1. General purpose air
(ISO 8573.1: Class 2.–3.)

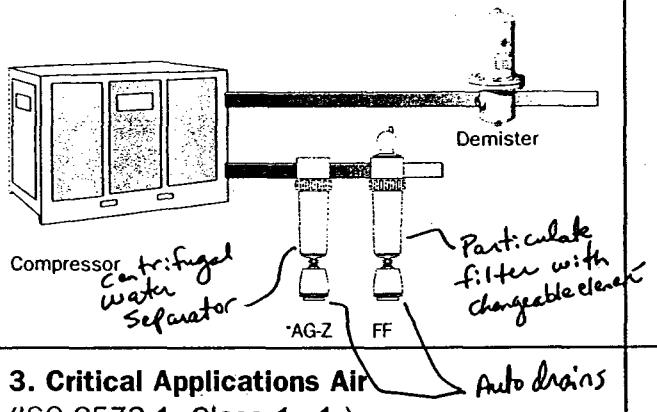

2. Oilfree Air
(ISO 8573.1: Class 1.–2.)

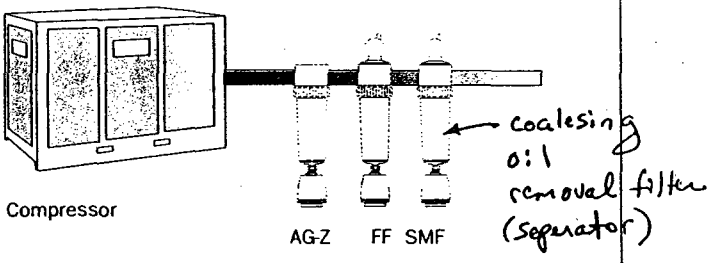

3. Critical Applications Air
(ISO 8573.1: Class 1.–1.)

Instrument Air

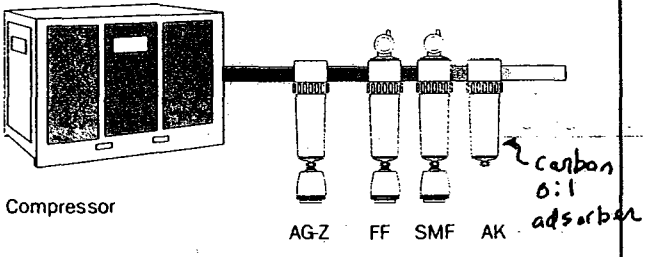

4. Reduced Dewpoint System
(ISO 8573.1: Class 1.4.1.)

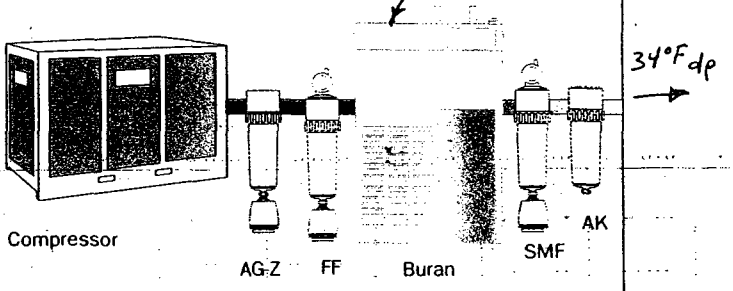

5. Extremely Low Dewpoint System
(ISO 8573.1: Class 1.1.1. and 1.2.1.)

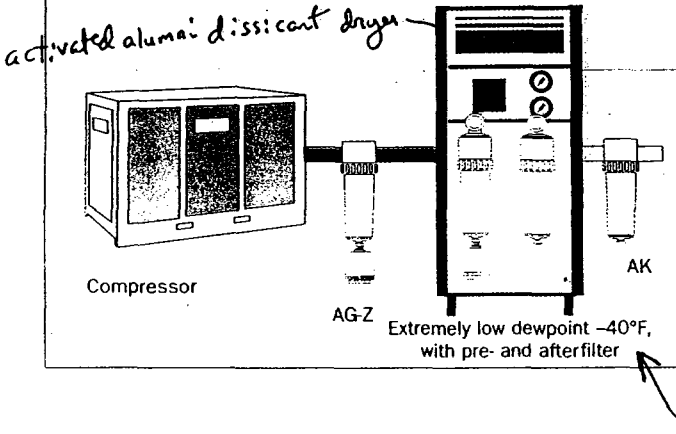

6. Critical Applications Air,
Dry, Oil And Oil Odor Free and Sterile
(ISO 8573.1:
Class 1.1.1.)

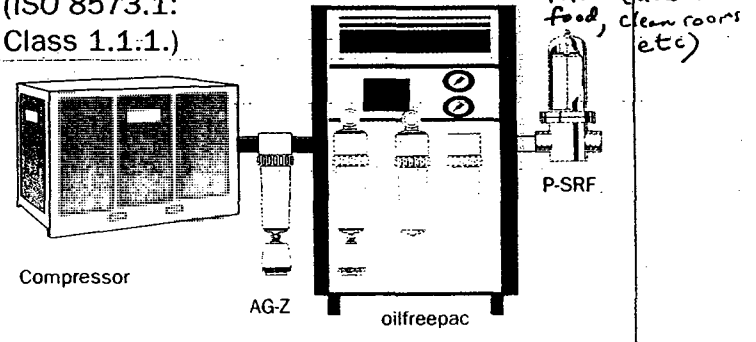

Quality Air
made by ultrafilter

Distributor:

Quality Air
made by ultrafilter

QUALITY AIR

DRYER/FILTER PACKAGE

DRY, CLEAN, OIL, OIL VAPOR AND ODOR FREE

EX WORKS. FREIGHT AND PACKAGING EXTRA.

Compressor Performance									
HP	**1.5**	**3**	**4**	**5**	**7.5**	**10**	**15**	**20**	**25**
cfm nominal	**5**	**12**	**15**	**20**	**30**	**40**	**60**	**85**	**100**
kW	**1.1**	**2.2**	**3**	**4**	**5.5**	**7.5**	**11**	**15**	**18.5**
m³/h	**10**	**20**	**25**	**35**	**50**	**65**	**100**	**150**	**175**
connection	**3/8"**	**1/2"**	**1/2"**	**1/2"**	**3/4"**	**3/4"**	**1"**	**1"**	**1"**
1. General Purpose									
Water Separator Type	AG-Z 70	AG-Z 70	AG-Z 70	AG-Z 70	AG-Z 70	AG-Z 70	AG-Z 70	AG-Z 0125	AG-Z 0125
US $	**$ 250**	**$ 250**	**$ 250**	**$ 250**	**$ 250**	**$ 250**	**$ 250**	**$ 260**	**$ 260**
Oil Removal Filter FF	AG 0010	AG 0020	AG 0020	AG 0020	AG 0050	AG 0050	AG 0070	AG 0100	AG 0100
US $	**$ 255**	**$ 255**	**$ 255**	**$ 255**	**$ 375**	**$ 375**	**$ 405**	**$ 440**	**$ 440**
or Demister (alternr. to AG-Z + FF)	UFD 00$ 20	UFD 0020	UFD 0020	UFD 0020	UFD 0050	UFD 0050	UFD 0100	UFD 0100	UFD 0100
US $	**$ 480**	**$ 480**	**$ 480**	**$ 480**	**$ 535**	**$ 535**	**$ 825**	**$ 825**	**$ 825**
2. Oilfree Air									
Water Separator	AG-Z 70	AG-Z 70	AG-Z 70	AG-Z 70	AG-Z 70	AG-Z 70	AG-Z 70	AG-Z 0125	AG-Z 0125
US $	**$ 250**	**$ 250**	**$ 250**	**$ 250**	**$ 250**	**$ 250**	**$ 250**	**$ 260**	**$ 260**
Oil Removal Filter FF	AG 0010	AG 0020	AG 0020	AG 0020	AG 0050	AG 0050	AG 0070	AG 0100	AG 0100
US $	**$ 255**	**$ 255**	**$ 255**	**$ 255**	**$ 375**	**$ 375**	**$ 405**	**$ 440**	**$ 440**
Oil Removal Filter SMF	AG 0010	AG 0020	AG 0020	AG 0020	AG 0050	AG 0050	AG 0070	AG 0100	AG 0100
US $	**$ 255**	**$ 255**	**$ 255**	**$ 255**	**$ 375**	**$ 375**	**$ 405**	**$ 440**	**$ 440**
3. Critical Application									
Water Separator	AG-Z 70	AG-Z 70	AG-Z 70	AG-Z 70	AG-Z 70	AG-Z 70	AG-Z 70	AG-Z 0125	AG-Z 0125
US $	**$ 250**	**$ 250**	**$ 250**	**$ 250**	**$ 250**	**$ 250**	**$ 250**	**$ 260**	**$ 260**
Oil Removal Filter FF	AG 0010	AG 0020	AG 0020	AG 0020	AG 0050	AG 0050	AG 0070	AG 0100	AG 0100
US $	**$ 255**	**$ 255**	**$ 255**	**$ 255**	**$ 375**	**$ 375**	**$ 405**	**$ 440**	**$ 440**
Oil Removal Filter SMF	AG 0010	AG 0020	AG 0020	AG 0020	AG 0050	AG 0050	AG 0070	AG 0100	AG 0100
US $	**$ 255**	**$ 255**	**$ 255**	**$ 255**	**$ 375**	**$ 375**	**$ 405**	**$ 440**	**$ 440**
Activated Carbon Filter	AG 0010	AG 0020	AG 0020	AG 0020	AG 0050	AG 0050	AG 0070	AG 0100	AG 0100
US $	**$ 255**	**$ 255**	**$ 255**	**$ 255**	**$ 375**	**$ 375**	**$ 405**	**$ 440**	**$ 440**
4. Reduced Dew Point									
Water Separator	AG-Z 70	AG-Z 70	AG-Z 70	AG-Z 70	AG-Z 70	AG-Z 70	AG-Z 70	AG-Z 0125	AG-Z 0125
US $	**$ 250**	**$ 250**	**$ 250**	**$ 250**	**$ 250**	**$ 250**	**$ 250**	**$ 260**	**$ 260**
Oil Removal Filter FF	AG 0010	AG 0020	AG 0020	AG 0020	AG 0050	AG 0050	AG 0070	AG 0100	AG 0100
US $	**$ 255**	**$ 255**	**$ 255**	**$ 255**	**$ 375**	**$ 375**	**$ 405**	**$ 440**	**$ 440**
Fridge Dryer Buran	CP 0005	CP 0015	CP 0015	CP 0020	CP 0030	CP 0040	CP 0060	CP 0085	CP 0100
US $	**$ 625**	**$ 830**	**$ 830**	**$ 930**	**$ 1,065**	**$ 1,190**	**$ 1,615**	**$ 2,185**	**$ 2,360**
Oil Removal Filter SMF	AG 0010	AG 0020	AG 0020	AG 0020	AG 0050	AG 0050	AG 0070	AG 0100	AG 0100
US $	**$ 255**	**$ 255**	**$ 255**	**$ 255**	**$ 375**	**$ 375**	**$ 405**	**$ 440**	**$ 440**
Activated Carbon Filter	AG 0010	AG 0020	AG 0020	AG 0020	AG 0050	AG 0050	AG 0070	AG 0100	AG 0100
US $	**$ 255**	**$ 255**	**$ 255**	**$ 255**	**$ 375**	**$ 375**	**$ 405**	**$ 440**	**$ 440**
5. Extremely Low Dewpoint									
Water Separator	AG-Z 70	AG-Z 70	AG-Z 70	AG-Z 70	AG-Z 70	AG-Z 70	AG-Z 70	AG-Z 0125	AG-Z 0125
US $	**$ 250**	**$ 250**	**$ 250**	**$ 250**	**$ 250**	**$ 250**	**$ 250**	**$ 260**	**$ 260**
Desiccant Dryer -40 °F									
ultrapac 2000 superplus	UP SP 0005	UP SP 0015	UP SP 0015	UP SP 0020	UP SP 0030	UP SP 0040	UP SP 0060		
ultrapac classic								UP 0085	UP 0100
US $	**$ 1,350**	**$ 1,790**	**$ 1,790**	**$ 2,195**	**$ 2,545**	**$ 3,020**	**$ 3,855**	**$ 5,280**	**$ 5,655**
6. oilfreepac/purepac									
Dry -100 °F									
Oilfree < 0,003 ppm									
Odorfree, Particlefree									
Water Separator	AG-Z 70	AG-Z 70	AG-Z 70	AG-Z 70	AG-Z 70	AG-Z 70	AG-Z 70	AG-Z 0125	AG-Z 0125
US $	**$ 250**	**$ 250**	**$ 250**	**$ 250**	**$ 250**	**$ 250**	**$ 250**	**$ 260**	**$ 260**
Oilfreepac	OFP 0005	OFP 0015	OFP 0015	OFP 0020	OFP 0030	OFP 0050	OFP 0060	OFP 0085	OFP 0100
US $	**$ 4,665**	**$ 5,870**	**$ 5,870**	**$ 6,410**	**$ 6,995**	**$ 7,875**	**$ 8,790**	**$ 11,060**	**$ 11,925**
7. Condensate Management									
ultramat Condensate Drain	UFM-T 1	UFM-T 10	UFM-T 20	UFM-T 100					
US $	**$ 155**	**$ 175**	**$ 350**	**$ 510**					
ultrasep	UFS SP 75	UFS SP 75	UFS SP 75	UFS SP 75	UFS SP 75	UFS SP 75	UFS SP 150	UFS SP 150	UFS SP 150
oil/water separator									
US $	**$ 320**	**$ 320**	**$ 320**	**$ 320**	**$ 320**	**$ 320**	**$ 625**	**$ 625**	**$ 625**

QUALITY AIR

DRYER/FILTER PACKAGE

DRY. CLEAN. OIL. OIL VAPOR AND ODOR FREE

EX WORKS. FREIGHT AND PACKAGING EXTRA.

Quality Air made by ultrafilter

30	40	50	60	75	85	100	115	120	150	175	215
125	175	200	250	300	400	450	500	600	700	800	1000
22	30	37	45	55	65	75	90	90	110	132	160
225	300	375	450	550	650	750	850	1000	1175	1350	1650
1½"	1½"	1½"	1½"	2"	2"	2"	2"	2"	2½"	3"	3"
AG-Z 0125	AG-Z 0200	AG-Z 0200	AG-Z 0300	AG-Z 0300	AG-Z 0450	AG-Z 0450	AG-Z 600	AG-Z 600	AG-Z 900	AG-Z 900	AG-Z 1400
$ 260	$ 465	$ 465	$ 495	$ 495	$ 525	$ 525	$ 770	$ 770	$ 925	$ 925	$ 1,050
AG 0200	AG 0200	AG 0200	AG 0300	AG 0400	AG 0400	AG 0500	AG 0500	AG 0700	AG 0700	AG 0800	AG 1000
$ 495	$ 495	$ 495	$ 615	$ 815	$ 815	$ 1,010	$ 1,010	$ 1,190	$ 1,190	$ 1,505	$ 1,670
UFD 0200	UFD 0200	UFD 0200	UFD 0200	UFD 0500	UFD 0500	UFD 0500	UFD 0500	UFD 1000	UFD 1000	UFD 1000	UFD 1000
$ 1,080	$ 1,080	$ 1,080	$ 1,080	$ 2,460	$ 2,460	$ 2,460	$ 2,460	$ 3,100	$ 3,100	$ 3,100	$ 3,100
AG-Z 0125	AG-Z 0200	AG-Z 0200	AG-Z 0300	AG-Z 0450	AG-Z 0450	AG-Z 0450	AG-Z 600	AG-Z 600	AG-Z 900	AG-Z 900	AG-Z 1400
$ 260	$ 465	$ 465	$ 495	$ 495	$ 525	$ 525	$ 770	$ 770	$ 925	$ 925	$ 1,050
AG 0200	AG 0200	AG 0200	AG 0300	AG 0400	AG 0400	AG 0500	AG 0500	AG 0700	AG 0700	AG 0800	AG 1000
$ 495	$ 495	$ 495	$ 615	$ 815	$ 815	$ 1,010	$ 1,010	$ 1,190	$ 1,190	$ 1,505	$ 1,670
AG 0200	AG 0200	AG 0200	AG 0300	AG 0400	AG 0400	AG 0500	AG 0500	AG 0700	AG 0700	AG 0800	AG 1000
$ 495	$ 495	$ 495	$ 615	$ 815	$ 815	$ 1,010	$ 1,010	$ 1,190	$ 1,190	$ 1,505	$ 1,670
AG-Z 0125	AG-Z 0200	AG-Z 0200	AG-Z 0300	AG-Z 0450	AG-Z 0450	AG-Z 0450	AG-Z 600	AG-Z 600	AG-Z 900	AG-Z 900	AG-Z 1400
$ 260	$ 465	$ 465	$ 495	$ 495	$ 525	$ 525	$ 770	$ 770	$ 925	$ 925	$ 1,050
AG 0200	AG 0200	AG 0200	AG 0300	AG 0400	AG 0400	AG 0500	AG 0500	AG 0700	AG 0700	AG 0800	AG 1000
$ 495	$ 495	$ 495	$ 615	$ 815	$ 815	$ 1,010	$ 1,010	$ 1,190	$ 1,190	$ 1,505	$ 1,670
AG 0200	AG 0200	AG 0200	AG 0300	AG 0400	AG 0400	AG 0500	AG 0500	AG 0700	AG 0700	AG 0800	AG 1000
$ 495	$ 495	$ 495	$ 615	$ 815	$ 815	$ 1,010	$ 1,010	$ 1,190	$ 1,190	$ 1,505	$ 1,670
AG-Z 0125	AG-Z 0200	AG-Z 0200	AG-Z 0300	AG-Z 0450	AG-Z 0450	AG-Z 0450	AG-Z 600	AG-Z 600	AG-Z 900	AG-Z 900	AG-Z 1400
$ 260	$ 465	$ 465	$ 495	$ 495	$ 525	$ 525	$ 770	$ 770	$ 925	$ 925	$ 1,050
AG 0200	AG 0200	AG 0200	AG 0300	AG 0400	AG 0400	AG 0500	AG 0500	AG 0700	AG 0700	AG 0800	AG 1000
$ 495	$ 495	$ 495	$ 615	$ 815	$ 815	$ 1,010	$ 1,010	$ 1,190	$ 1,190	$ 1,505	$ 1,670
AG 0200	AG 0200	AG 0200	AG 0300	AG 0400	AG 0400	AG 0500	AG 0500	AG 0700	AG 0700	AG 0800	AG 1000
$ 495	$ 495	$ 495	$ 615	$ 815	$ 815	$ 1,010	$ 1,010	$ 1,190	$ 1,190	$ 1,505	$ 1,670
AG-Z 0125	AG-Z 0200	AG-Z 0200	AG-Z 0300	AG-Z 0450	AG-Z 0450	AG-Z 0450	AG-Z 600	AG-Z 600	AG-Z 900	AG-Z 900	AG-Z 1400
$ 260	$ 465	$ 465	$ 495	$ 495	$ 525	$ 525	$ 770	$ 770	$ 925	$ 925	$ 1,050
AG 0200	AG 0200	AG 0200	AG 0300	AG 0400	AG 0400	AG 0500	AG 0500	AG 0700	AG 0700	AG 0800	AG 1000
$ 495	$ 495	$ 495	$ 615	$ 815	$ 815	$ 1,010	$ 1,010	$ 1,190	$ 1,190	$ 1,505	$ 1,670
CP 0125	CP 0175	CP 0200	CP 0250	CP 0300	CP 0400	CP 0450	CP 0500	CP 0600	CP 0700	CP 0800	CP 1000
$ 2,905	$ 3,540	$ 4,120	$ 4,720	$ 5,110	$ 5,810	$ 6,565	$ 7,275	$ 8,505	$ 9,730	$ 10,285	$ 12,100
AG 0200	AG 0200	AG 0200	AG 0300	AG 0400	AG 0400	AG 0500	AG 0500	AG 0700	AG 0700	AG 0800	AG 1000
$ 495	$ 495	$ 495	$ 615	$ 815	$ 815	$ 1,010	$ 1,010	$ 1,190	$ 1,190	$ 1,505	$ 1,670
AG 0200	AG 0200	AG 0200	AG 0300	AG 0400	AG 0400	AG 0500	AG 0500	AG 0700	AG 0700	AG 0800	AG 1000
$ 495	$ 495	$ 495	$ 615	$ 815	$ 815	$ 1,010	$ 1,010	$ 1,190	$ 1,190	$ 1,505	$ 1,670
AG-Z 0125	AG-Z 0200	AG-Z 0200	AG-Z 0300	AG-Z 0450	AG-Z 0450	AG-Z 0450	AG-Z 600	AG-Z 600	AG-Z 900	AG-Z 900	AG-Z 1400
$ 260	$ 465	$ 465	$ 495	$ 495	$ 525	$ 525	$ 770	$ 770	$ 925	$ 925	$ 1,050
UP 0125	UP 0175	UP 0200	UP 0300	UP 0300	UP 0400	UP 0500	UP 0500	UP 0600	UP 0800	UP 0800	UP 1000
$ 6,325	$ 7,345	$ 8,060	$ 9,930	$ 9,930	$ 10,950	$ 12,645	$ 12,645	$ 14,695	$ 18,555	$ 18,555	$ 20,060
AG-Z 0125	AG-Z 0200	AG-Z 0200	AG-Z 0300	AG-Z 0300	AG-Z 0450	AG-Z 0450	AG-Z 600	AG-Z 600	AG-Z 900	AG-Z 900	AG-Z 1400
$ 260	$ 465	$ 465	$ 495	$ 495	$ 525	$ 525	$ 770	$ 770	$ 925	$ 925	$ 1,050
OFP 0125	OFP 0175	OFP 0200	OFP 0300	OFP 0300	OFP 0400	OFP 0500	OFP 0500	OFP 0600	OFP 0800	OFP 0800	OFP 1000
$ 13,000	$ 15,105	$ 17,245	$ 20,985	$ 20,985	$ 24,615	$ 28,575	$ 28,575	$ 33,570	$ 36,500	$ 36,500	$ 39,335
UFS-SP 150	UFS-SP 250	UFS-SP 250	UFS-SP 250	UFS-SP 500	UFS-SP 500	UFS-SP 500	UFS-SP 500	UFS-SP 1000	UFS-SP 1000	UFS-SP 1000	UFS-SP 1000
$ 625	$ 980	$ 980	$ 980	$ 1,210	$ 1,210	$ 1,210	$ 1,210	$ 1,625	$ 1,625	$ 1,625	$ 1,625

Operating pressure 100 psig. Design pressure 150 and 250 psig. Designed for use in tropical climates.

[redacted]

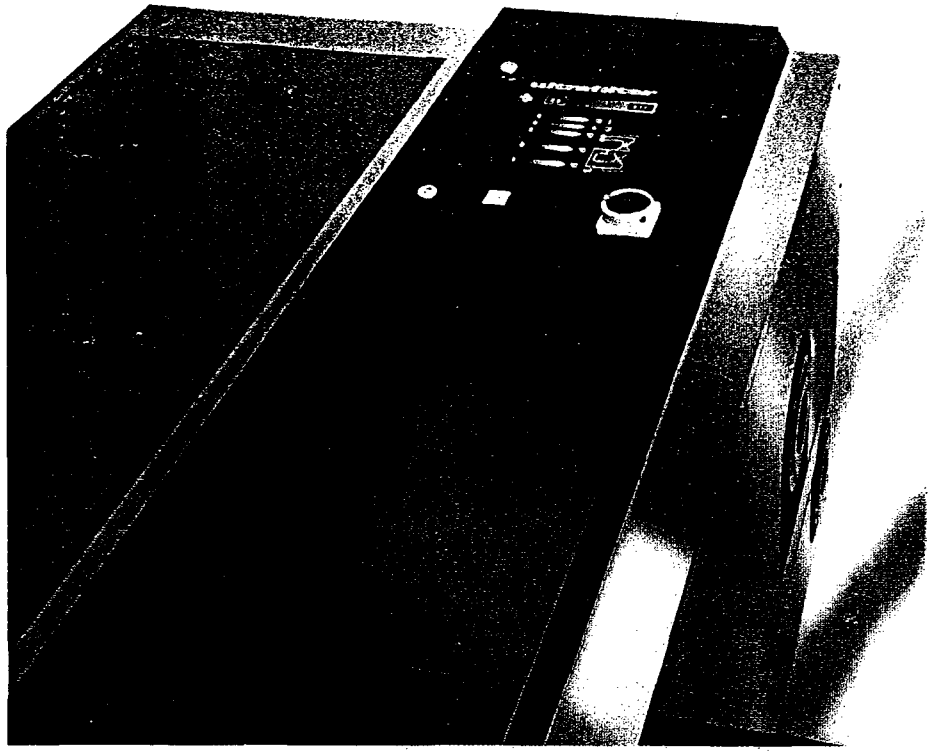

DRY COMPRESSED AIR.
[redacted] ULTRATROC®.
THE FRIDGE DRYER.

Compressed Air Products
Electric Motors, Inc.
3300-F Rifle Range Road
Knoxville, TN 37918
(423) 688-6633
1-800-588-3778
Herman Sheridan

COMPRESSED AIR CAGI AND GAS INSTITUTE®

ultrafilter
ULTRAFILTER. AND MORE.

THE SMALLEST.
ULTRATROC® BURAN

In order to reduce the operating costs of using compressed air and gases, the right drying equipment is needed. ultratroc® BURAN high-efficiency dryers can be used to dry all compressed air and gases with a pressure dew point higher than 122°F.

The new generation of ultratroc® high-efficiency dryers BURAN takes care of lower volume flows between 15 and 1.120 cfm and delivers dry compressed air.

The ultratroc®-BURAN fridge dryer is distinctive because of its unique low pressure drop, outstanding performance and low required energy.

This means for you: Reduction in energy and running costs.

And this repays in pounds and pence.

There are some advantages for the BURAN, e.g.:

- performance of the range: 20 models with volume flows of 15 to 1,120 cfm
- proved concept of the TRISAB heat exchanger
- high energy reduction of up to 90%
- the considerable reduced quantity of refrigerant
- refrigerant R 134a, as standard in the entire series
- the compact construction of the BURAN-series
- the low pressure drop
- secure operation by performance regulation
- secure operation up to an environmental temperature of +122°F

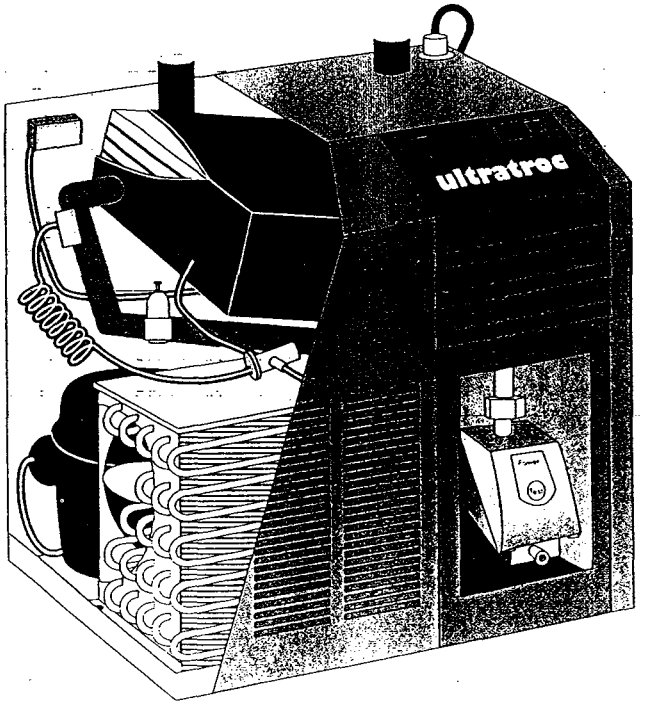

ALL AT A GLANCE.

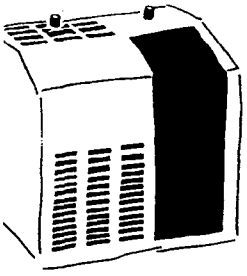

Buran	volume flow	weight	connection	dimensions in inches		
type	cfm	lb		height	width	depth
SD 0020	15	79	1/2"	21	23	17
SD 0030	20	87	1/2"	21	23	17
SD 0045	30	101	3/4"	21	23	17
SD 0060	40	106	3/4"	21	23	17
SD 0075	50	108	3/4"	21	23	17
SD 0090	60	114	1"	21	23	17
SD 0130	80	114	1"	21	23	17
SD 0170	120	117	1"	21	23	17
SD 0220	140	145	1"	25	23	23
SD 0260	170	158	1"	25	23	23
SD 0340	200	176	1 1/2"	25	23	23
SD 0410	260	209	1 1/2"	25	23	23
SD 0450	300	213	1 1/2"	25	23	23
SD 0630	400	334	2"	47	35	31
SD 0800	500	365	2"	47	35	31
SD 0980	600	374	2"	47	35	31
SD 1160	720	389	2 1/2"	47	35	31
SD 1330	840	396	2 1/2"	47	35	31
SD 1500	940	409	2 1/2"	47	35	31
SD 1680	1120	431	2 1/2"	47	35	31

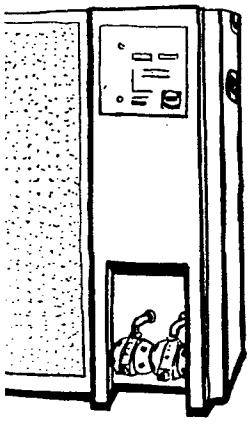

Boreas	volume flow	weight	connection	dimensions in inches		
type	cfm	lb		height	width	depth
SD 1800	1200	946	4"	74	47	49
SD 2200	1500	990	4"	74	47	49
SD 2600	1800	990	4"	74	47	49
SD 3900	2600	1342	6"	74	47	49
SD 5000	3400	1419	6"	74	47	49
SD 7000	4800	2222	8"	74	87	49
SD 8400	5600	2596	8"	74	87	49

QUALITY AIR PREPARATION EQUIPMENT

ARROW PNEUMATICS

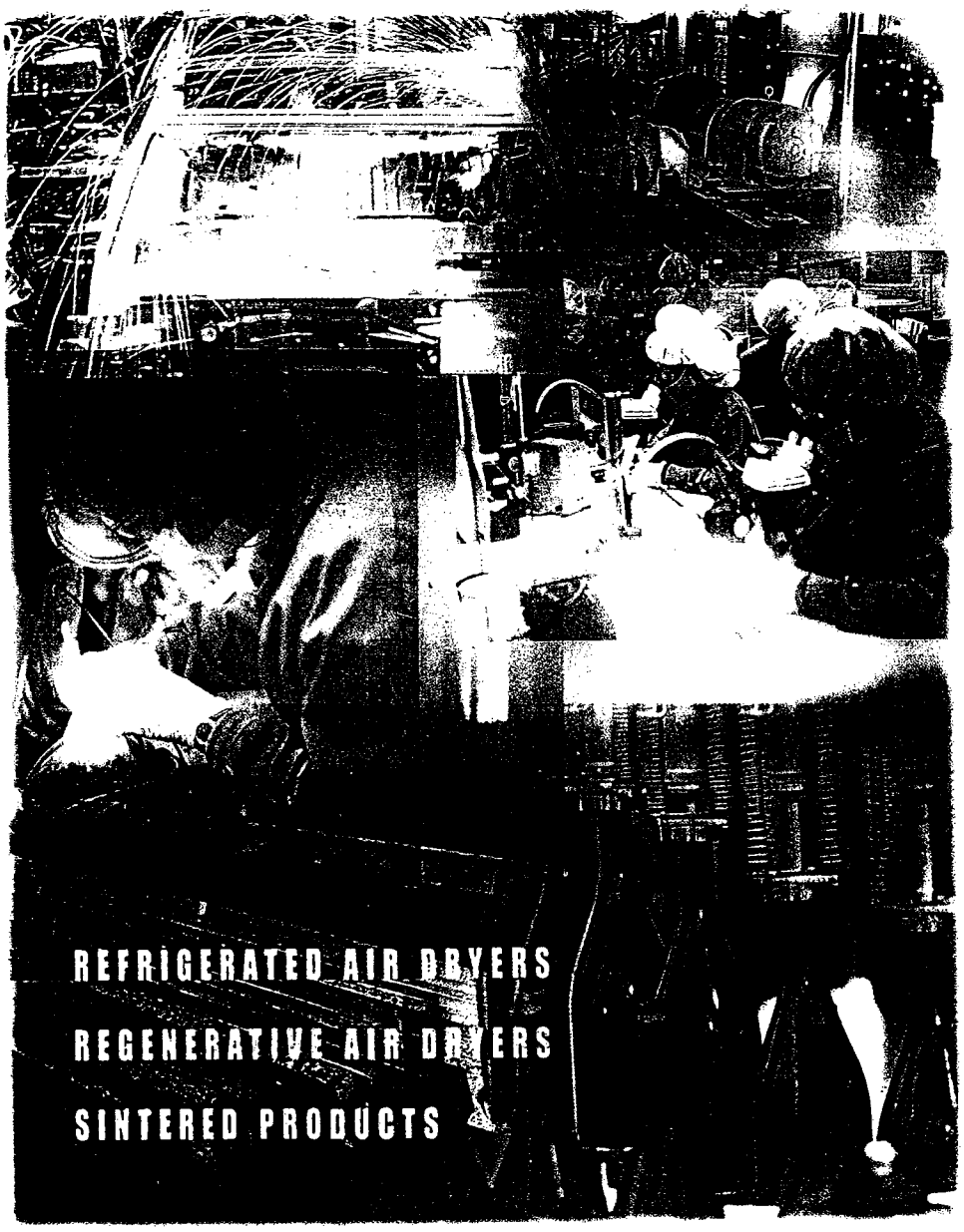

REFRIGERATED AIR DRYERS
REGENERATIVE AIR DRYERS
SINTERED PRODUCTS

Arrow Pneumatics

Arrow Pneumatics, Inc.
500 North Oakwood Road
Lake Zurich, Illinois 60047

Voice: (847) 438-9100
Fax: (847) 438-7110
Internet: www.arrowpneumatics.com

FLUID POWER DISTRIBUTORS ASSOCIATION FPDA

NFPA

42008
Revised 5/99

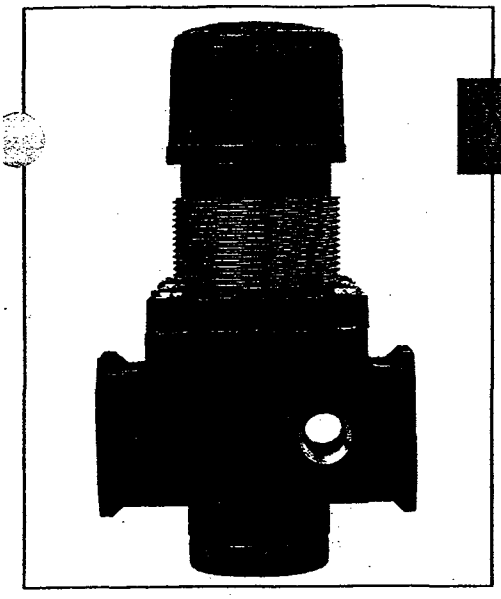

Wide Low Regulators

R37

FEATURES

- Micro finished brass seat to ensure no reduced pressure creep
- Reinforce diaphragm for repeated accuracy
- Minimal pressure droop due to efficient aspiration
- Three position non-rising adjustment knob; push to lock, pull to adjust, detach to make tamper resistant
- Relieving style standard
- Easily panel mounted
- Tamper-proof cap included
- High scfm flow due to efficient aspiration

OPTIONS

add suffix to part number in alpha order

G	Gauge (0-160 psi)	R373G
H	High pressure 0 to 250 psi adjustment	R373H
I	Instrument pressure 0 to 20 psi adjustment	R373I
L	Low pressure 0 to 60 psi adjustment	R373L
N	Non-relieving	R373N
P	Panel mount	R373P
Q	Panel mount 9/16" bonnet	R373Q
T	Tee handle adjustment	R373T

SPECIFICATIONS

Body
- Black coated aluminum

Bonnet
- Glass filled nylon

Seals
- Buna N Elastomer standard

Seat
- Brass

Supply Pressure
- 250 psig

Operating Pressure Range
- 0 to 125 psig

Operating Temperature Range
- 40°F to 120°

Gauge Port
- 1/4" full flow

KITS

Repair Kits
- Diaphragm kit relieving DK35
- Diaphragm kit Non-relieving DK35N
- Valve kit VK37

Mounting Kits see page 62
- Bracket kit RBK5
- Panel mounting kit ring only panel hole size 1 3/16" PKR35
- Panel mount bracket and ring PMKR35

PERFORMANCE CHARACTERISTICS

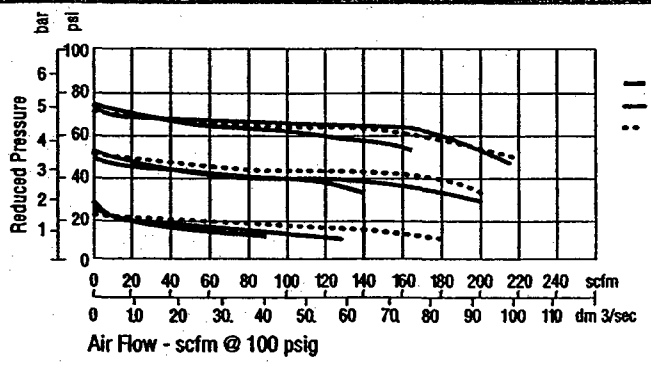

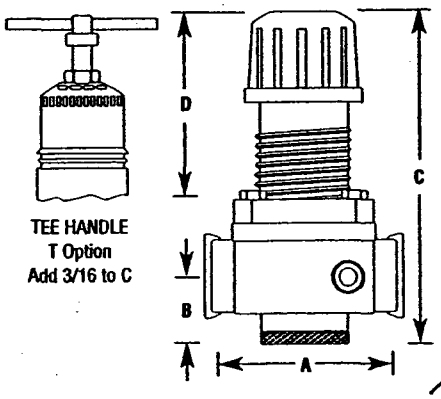

DIMENSIONS

PIPE SIZE	MODEL NO.	MAX. FLOW SCFM	DIMENSIONS (INCHES) A	B	C	D	E (WIDTH)	WEIGHT (LBS.)
3/8"	R373	170	3 1/4	1 13/32	5 7/8	2 3/4	2 1/4	1.3
1/2"	R374	215	3 1/4	1 13/32	5 7/8	2 3/4	2 1/4	1.3
3/4"	R376	220	3 1/4	1 13/32	5 7/8	2 3/4	2 1/4	1.3

www.arrowpneumatics.com

Brackets & Accessories

Miniature Mounting Brackets

BR1611 Bracket & Ring
PK1611 Ring Only

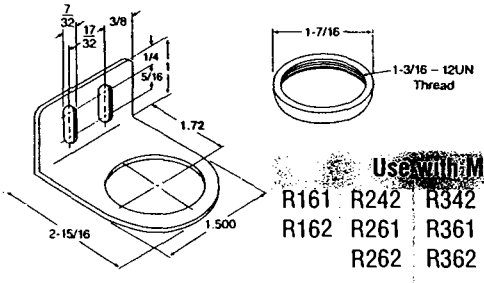

Use with Model #				
R161	R242	R342	7681	741
R162	R261	R361	7682	742
	R262	R362	7621	
			7622	

FBK5

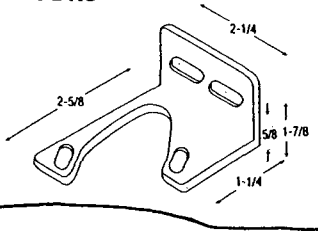

Use with Model #		
F352	L352	L452
F353	L353	L453
F354	L354	L454

RBK5

Mounting bracket for Tri•Star, Midflow, and precision regulators listed below. Also can be used for Tri-Star FRL Combination units.

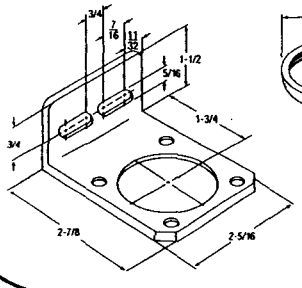

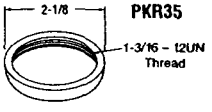

Use with Model #			
R352	R373	P10-02	P14-02
R353	R374	P10-03	P14-03
R354	R376		P14-04

ABK-10

Use with Model #
VC7510
VC7510XL
VC7525

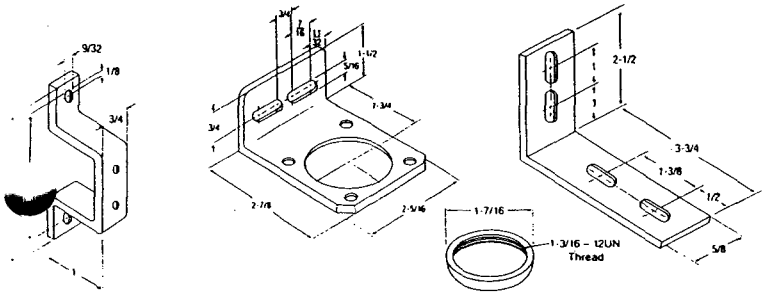

BR5702 Bracket

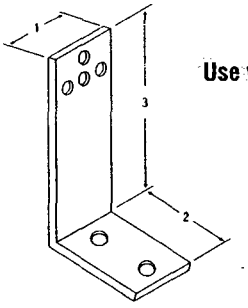

Use with Model #
5702S

FBK7 Midflow Brackets

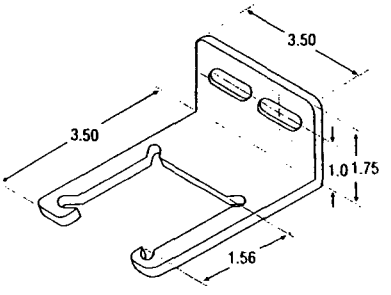

Use with Model #			
F373	F383	L373	L383
F374	F384	L374	L384
F376	F386	L376	L386

ACA Pipe Brackets

Mounting bracket for use with Tri-Star FRL's.
Example: N33354

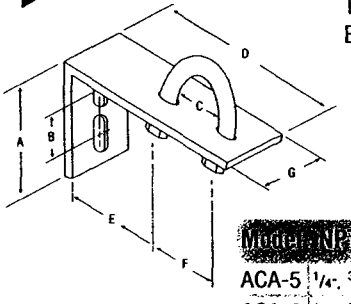

Model	NPT	A	B	C	D	E	F	G
ACA-5	1/4", 3/8"	2 1/2"	3/16"	3/4"	3 7/8"	2 1/16"	15/16"	5/8"
ACA-6	1/2", 3/4"	2 1/2"	3/16"	1 5/32"	3 7/8"	1 13/16"	1 5/16"	5/8"
ACA-7	1"	2 1/2"	3/16"	1 1/2"	3 7/8"	1 5/8"	1 11/16"	5/8"

Regulator Accessories

Arrow regulators may be panel mounted to improve machine design and overall appearance, they are convenient for control panel or console mounting.

Suffix Q Tri-Star & Midflow

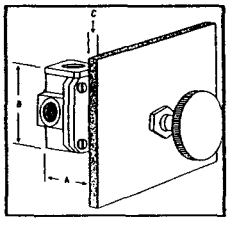

Suffix P Tri-Star & Midflow

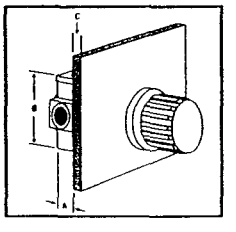

Suffix P (1500 Series Regulators)

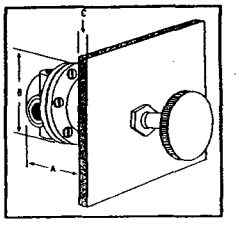

Panel Mounting Regulators

Regulator Model	Suffix for Panel Mt.	Panel Hole Size	Dimensions & Max. A	B	C
Tri-Star, Midflow & Precision Series	P	1 13/16"	1 1/4"	2 22/32"	1/2"
Tri-Star, Midflow & Precision Series	Q	9/16"	3 1/2"	2 23/32"	5/16"
1588	P	3/4"	5"	4 3/4"	1/4"

CALCULATION COVER SHEET

PROJECT New Bedford Harbor Superfund Site OU#1

SUBJECT Suction Line Submergence Depth

CLIENT U.S. Army Corps of Engineers – New England District (USACE – NED)

CALCULATION NO. P-16 PROJECT NO. 5197.1720.3392

NO OF SHEETS 4 DESIGN LEVEL _____

CALCULATION BY OTHERS _____ YES X NO

PREPARER E. Griffin

REVIEWED BY _____ DATE 10-30-01

ASSUMPTIONS THAT REQUIRE CONFIRMATION _____ YES _____ NO

ASSUMPTIONS CONFIRMED BY _____ DATE _____

PRINT NAME, DATE AND INITIAL

Rev No	Affected Sheets	Prepared by Date	Checked by Date	Verified by Date

by EG 10/18/01
CK JJB 10/19/01

Suction Line: Size of Flared End and Submergence Depth

References:

1. Crane Co., "Flow of Fluids Through Valves, Fittings, and Pipe," Technical Paper No. 410, 1988.
2. Metcalf & Eddy, Inc., *Wastewater Engineering: Collection and Pumping of Wastewater*, McGraw-Hill, Inc., 1981.

Given:

1. 8-inch suction line
2. 1,000 gpm maximum flow rate
3. Maximum required submergence depth = 2 ft

Calculation:

1. From Table 9-3, Metcalf & Eddy:

If maximum required submergence depth, S = 2 ft, velocity at diameter D = 3.3 ft/sec

2. From page B-14, Crane:

Q = 1,000 gpm
D = 10 inches, velocity = 4.07 ft/sec
D = 12 inches, velocity = 2.87 ft/sec

Therfore, use a 12-inch flared end on the 8-inch suction line.

3. Calculate actual submergence depth, S:

$$\frac{2+3.3\,ft/\sec}{x} = 2.87\,ft/\sec$$

$$x = 1.85$$

$$\frac{1+2\,ft}{1.85} = 1.6\,ft$$

by EG 10/18/01
CK JB 10/19/01

3/4

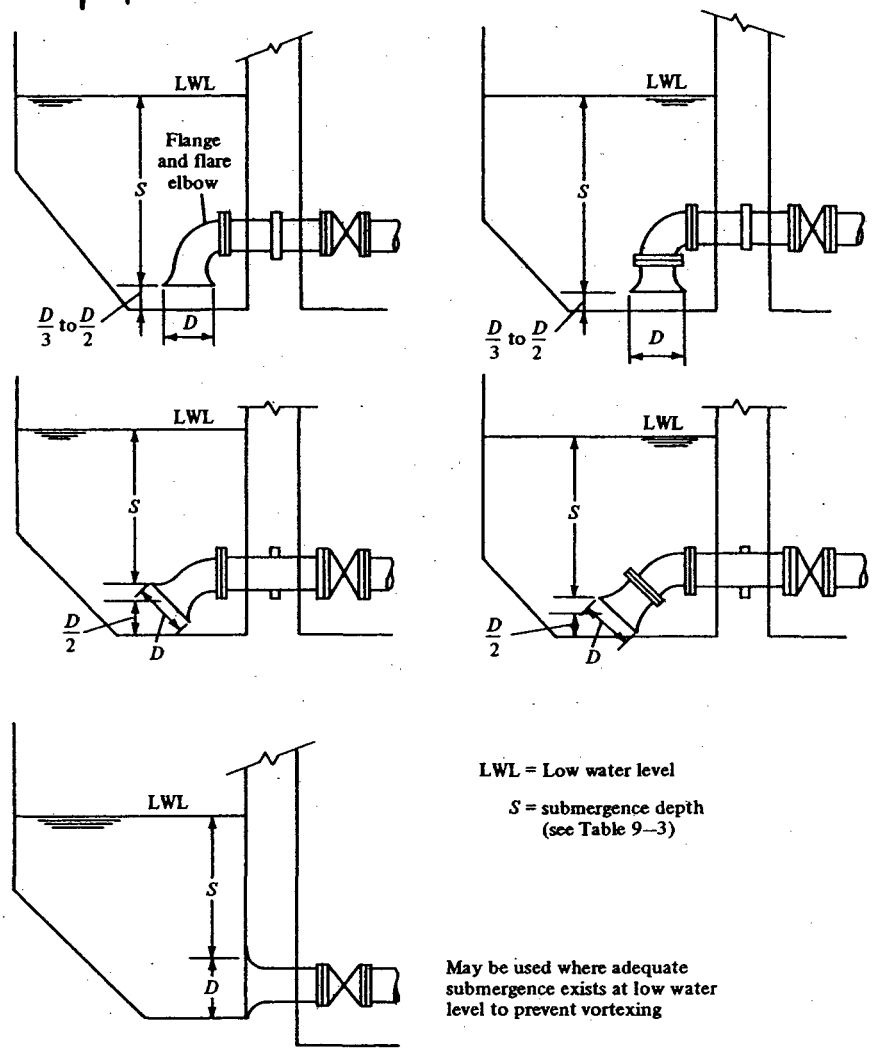

Figure 9-5 Pump suction connections to wet well.

Table 9-3 Submergence depth required to prevent vortexing in pump suction connection

Velocity at diameter D		Required submergence depth, S	
m/s	(ft/s)	m	(ft)
0.6	(2)	0.3	(1)
1.0	(3.3)	0.6	(2)
1.5	(5)	1.0	(3.4)
1.8	(6)	1.4	(4.5)
2.1	(7)	1.7	(5.7)
2.4	(8)	2.15	(7.1)
2.7	(9)	2.6	(8.5)

Note: m × 3.2808 = ft

by EG 10/18/01 4/4
ok JB 10/19/01

Flow of Water Through Schedule 40 Steel Pipe

Discharge		Pressure Drop per 100 feet and Velocity in Schedule 40 Pipe for Water at 60 F.															
		Velocity	Press. Drop	Velocity	Press. Drop	Velocity	Press. Drop	Velocity	Press. Drop	Velocity	Press. Drop	Velocity	Press. Drop	Velocity	Press. Drop	Velocity	Press. Drop
Gallons per Minute	Cubic Ft. per Second	Feet per Second	Lbs. per Sq. In.	Feet per Second	Lbs. per Sq. In.	Feet per Second	Lbs. per Sq. In.	Feet per Second	Lbs. per Sq. In.	Feet per Second	Lbs. per Sq. In.	Feet per Second	Lbs. per Sq. In.	Feet per Second	Lbs. per Sq. In.	Feet per Second	Lbs. per Sq. In.
		1/8"		1/4"		3/8"		1/2"									
.2	0.000446	1.13	1.86	0.616	0.359												
.3	0.000668	1.69	4.22	0.924	0.903	0.504	0.159	0.317	0.061	3/4"							
.4	0.000891	2.26	6.98	1.23	1.61	0.672	0.345	0.422	0.086								
.5	0.00111	2.82	10.5	1.54	2.39	0.840	0.539	0.528	0.167	0.301	0.033						
.6	0.00134	3.39	14.7	1.85	3.29	1.01	0.751	0.633	0.240	0.361	0.041						
.8	0.00178	4.52	25.0	2.46	5.44	1.34	1.25	0.844	0.408	0.481	0.102	1"		1 1/4"			
1	0.00223	5.65	37.2	3.08	8.28	1.68	1.85	1.06	0.600	0.602	0.155	0.371	0.048			1 1/2"	
2	0.00446	11.29	134.4	6.16	30.1	3.36	6.58	2.11	2.10	1.20	0.526	0.743	0.164	0.429	0.044		
3	0.00668			9.25	64.1	5.04	13.9	3.17	4.33	1.81	1.09	1.114	0.336	0.644	0.090	0.473	0.043
4	0.00891			12.33	111.2	6.72	23.9	4.22	7.42	2.41	1.83	1.49	0.565	0.858	0.150	0.630	0.071
5	0.01114	2"				8.40	36.7	5.28	11.2	3.01	2.75	1.86	0.835	1.073	0.223	0.788	0.104
6	0.01337	0.574	0.044	2 1/2"		10.08	51.9	6.33	15.8	3.61	3.84	2.23	1.17	1.29	0.309	0.946	0.145
8	0.01782	0.765	0.073			13.44	91.1	8.45	27.7	4.81	6.60	2.97	1.99	1.72	0.518	1.26	0.241
10	0.02228	0.956	0.108	0.670	0.046			10.56	42.4	6.02	9.99	3.71	2.99	2.15	0.774	1.58	0.361
15	0.03342	1.43	0.224	1.01	0.094	3"				9.03	21.6	5.57	6.36	3.22	1.63	2.37	0.755
20	0.04456	1.91	0.375	1.34	0.158	0.868	0.056	3 1/2"		12.03	37.8	7.43	10.9	4.29	2.78	3.16	1.28
25	0.05570	2.39	0.561	1.68	0.234	1.09	0.083	0.812	0.041	4"		9.28	16.7	5.37	4.22	3.94	1.93
30	0.06684	2.87	0.786	2.01	0.327	1.30	0.114	0.974	0.056			11.14	23.8	6.44	5.92	4.73	2.72
35	0.07798	3.35	1.05	2.35	0.436	1.52	0.151	1.14	0.071	0.882	0.041	12.99	32.2	7.51	7.90	5.52	3.64
40	0.08912	3.83	1.35	2.68	0.556	1.74	0.192	1.30	0.095	1.01	0.052	14.85	41.5	8.59	10.24	6.30	4.65
45	0.1003	4.30	1.67	3.02	0.668	1.95	0.239	1.46	0.117	1.13	0.064			9.67	12.80	7.09	5.85
50	0.1114	4.78	2.03	3.35	0.839	2.17	0.288	1.62	0.142	1.26	0.076	5"		10.74	15.66	7.88	7.15
60	0.1337	5.74	2.87	4.02	1.18	2.60	0.406	1.95	0.204	1.51	0.107			12.89	22.2	9.47	10.21
70	0.1560	6.70	3.84	4.69	1.59	3.04	0.540	2.27	0.261	1.76	0.143	1.12	0.047			11.05	13.71
80	0.1782	7.65	4.97	5.36	2.03	3.47	0.687	2.60	0.334	2.02	0.180	1.28	0.060			12.62	17.59
90	0.2005	8.60	6.20	6.03	2.53	3.91	0.861	2.92	0.416	2.27	0.224	1.44	0.074	6"		14.20	22.0
100	0.2228	9.56	7.59	6.70	3.09	4.34	1.05	3.25	0.509	2.52	0.272	1.60	0.090	1.11	0.036	15.78	26.9
125	0.2785	11.97	11.76	8.38	4.71	5.43	1.61	4.06	0.769	3.15	0.415	2.01	0.135	1.39	0.055	19.72	41.4
150	0.3342	14.36	16.70	10.05	6.69	6.51	2.24	4.87	1.08	3.78	0.580	2.41	0.190	1.67	0.077		
175	0.3899	16.75	22.3	11.73	8.97	7.60	3.00	5.68	1.44	4.41	0.774	2.81	0.253	1.94	0.102		
200	0.4456	19.14	28.8	13.42	11.68	8.68	3.87	6.49	1.85	5.04	0.985	3.21	0.323	2.22	0.130	8"	
225	0.5013	...	...	15.09	14.63	9.77	4.83	7.30	2.32	5.67	1.23	3.61	0.401	2.50	0.162	1.44	0.043
250	0.557	...	...	...	...	10.85	5.93	8.12	2.84	6.30	1.46	4.01	0.495	2.78	0.195	1.60	0.051
275	0.6127	...	...	...	...	11.94	7.14	8.93	3.40	6.93	1.79	4.41	0.583	3.05	0.234	1.76	0.061
300	0.6684	...	...	...	...	13.00	8.36	9.74	4.02	7.56	2.11	4.81	0.683	3.33	0.275	1.92	0.072
325	0.7241	...	...	...	...	14.12	9.89	10.53	4.09	8.19	2.47	5.21	0.797	3.61	0.320	2.08	0.083
350	0.7798			...	...	...	...	11.36	5.41	8.82	2.84	5.62	0.919	3.89	0.367	2.24	0.095
375	0.8355			...	...	...	...	12.17	6.18	9.45	3.25	6.02	1.05	4.16	0.416	2.40	0.108
400	0.8912			...	...	...	...	12.98	7.03	10.08	3.68	6.42	1.19	4.44	0.471	2.56	0.121
425	0.9469			...	...	...	...	13.80	7.89	10.71	4.12	6.82	1.33	4.72	0.529	2.73	0.136
450	1.003	10"		...	...	...	...	14.61	8.80	11.34	4.60	7.22	1.48	5.00	0.590	2.89	0.151
475	1.059	1.93	0.054			...	...	...	...	11.97	5.12	7.62	1.64	5.27	0.653	3.04	0.166
500	1.114	2.03	0.059			...	...	...	...	12.60	5.65	8.02	1.81	5.55	0.720	3.21	0.182
550	1.225	2.24	0.071			...	...	...	...	13.85	6.79	8.82	2.17	6.11	0.861	3.53	0.219
600	1.337	2.44	0.083			...	...	...	...	15.12	8.04	9.63	2.55	6.66	1.02	3.85	0.258
650	1.448	2.64	0.097	12"		...	...	...	...	...	...	10.43	2.98	7.22	1.18	4.17	0.301
700	1.560	2.85	0.112	2.01	0.047			...	...	...	...	11.23	3.43	7.78	1.35	4.49	0.343
750	1.671	3.05	0.127	2.15	0.054	14"		...	...	...	...	12.03	3.92	8.33	1.55	4.81	0.392
800	1.782	3.25	0.143	2.29	0.061			...	...	...	...	12.83	4.43	8.88	1.75	5.13	0.443
850	1.894	3.46	0.160	2.44	0.068	2.02	0.042	...	...	...	...	13.64	5.00	9.44	1.96	5.45	0.497
900	2.005	3.66	0.179	2.58	0.075	2.13	0.047	...	...	...	...	14.44	5.58	9.99	2.18	5.77	0.554
950	2.117	3.86	0.198	2.72	0.083	2.25	0.052			...	...	15.24	6.21	10.55	2.42	6.09	0.613
1 000	2.228	4.07	0.218	2.87	0.091	2.37	0.057	16"		...	...	16.04	6.84	11.10	2.68	6.41	0.675
1 100	2.451	4.48	0.260	3.15	0.110	2.61	0.068			...	...	17.65	8.23	12.22	3.22	7.05	0.807
1 200	2.674	4.88	0.306	3.44	0.128	2.85	0.080	2.18	0.042	...	...	...	...	13.33	3.81	7.70	0.948
1 300	2.896	5.29	0.355	3.73	0.150	3.08	0.093	2.36	0.048	...	...	...	...	14.43	4.45	8.33	1.11
1 400	3.119	5.70	0.409	4.01	0.171	3.32	0.107	2.54	0.055	18"				15.55	5.13	8.98	1.28
1 500	3.342	6.10	0.466	4.30	0.195	3.56	0.122	2.72	0.063					16.66	5.85	9.62	1.46
1 600	3.565	6.51	0.527	4.59	0.219	3.79	0.138	2.90	0.071					17.77	6.61	10.26	1.65
1 800	4.010	7.32	0.663	5.16	0.276	4.27	0.172	3.27	0.088	2.58	0.050			19.99	8.37	11.54	2.08
2 000	4.456	8.14	0.808	5.73	0.339	4.74	0.209	3.63	0.107	2.87	0.060	20"		22.21	10.3	12.82	2.55
2 500	5.570	10.17	1.24	7.17	0.515	5.93	0.321	4.54	0.163	3.59	0.091					16.03	3.94
3 000	6.684	12.20	1.76	8.60	0.731	7.11	0.451	5.45	0.232	4.30	0.129	3.46	0.075	24"		19.24	5.59
3 500	7.798	14.24	2.38	10.03	0.982	8.30	0.607	6.35	0.312	5.02	0.173	4.04	0.101			22.44	7.56
4 000	8.912	16.27	3.08	11.47	1.27	9.48	0.787	7.26	0.401	5.74	0.222	4.62	0.129	3.19	0.052	25.65	9.80
4 500	10.03	18.31	3.87	12.90	1.60	10.67	0.990	8.17	0.503	6.46	0.280	5.20	0.162	3.59	0.065	28.87	12.2
5 000	11.14	20.35	4.71	14.33	1.95	11.85	1.21	9.08	0.617	7.17	0.340	5.77	0.199	3.99	0.079	...	...
6 000	13.37	24.41	6.74	17.20	2.77	14.23	1.71	10.89	0.877	8.61	0.483	6.93	0.280	4.79	0.111	...	...
7 000	15.60	28.49	9.11	20.07	3.74	16.60	2.31	12.71	1.18	10.04	0.652	8.08	0.376	5.59	0.150	...	...
8 000	17.82	...	...	22.93	4.84	18.96	2.99	14.52	1.51	11.47	0.839	9.23	0.488	6.38	0.192	...	...
9 000	20.05	...	...	25.79	6.09	21.34	3.76	16.34	1.90	12.91	1.05	10.39	0.608	7.18	0.242	...	...
10 000	22.28	...	...	28.66	7.46	23.71	4.61	18.15	2.34	14.34	1.28	11.54	0.739	7.98	0.294	...	...
12 000	26.74	...	...	34.40	10.7	28.45	6.59	21.79	3.33	17.21	1.83	13.85	1.06	9.58	0.416	...	...
14 000	31.19	...	...	...	...	33.19	8.89	25.42	4.49	20.08	2.45	16.16	1.43	11.17	0.562	...	...
16 000	35.65	...	...	...	...	...	...	29.05	5.83	22.95	3.18	18.47	1.85	12.77	0.723	...	...
18 000	40.10	...	...	...	...	...	...	32.68	7.31	25.82	4.03	20.77	2.32	14.36	0.907	...	...
20 000	44.56	...	...	...	...	...	...	36.31	9.03	28.69	4.93	23.08	2.86	15.96	1.12	...	...

For pipe lengths other than 100 feet, the pressure drop is proportional to the length. Thus, for 50 feet of pipe, the pressure drop is approximately one-half the value given in the table . . , for 300 feet, three times the given value, etc.

Velocity is a function of the cross sectional flow area; thus, it is constant for a given flow rate and is independent of pipe length.

For calculations for pipe other than Schedule 40, see explanation on next page.

CALCULATION COVER SHEET

PROJECT New Bedford Harbor Superfund Site OU#1

SUBJECT Alum Transfer and Recirculation Pumps (DP-201 & DP-202)

CLIENT U.S. Army Corps of Engineers – New England District (USACE – NED)

CALCULATION NO. P-17 PROJECT NO. 5197.1720.3392

NO OF SHEETS 24 DESIGN LEVEL _____

CALCULATION BY OTHERS _____ YES X NO

PREPARER E. Griffin

REVIEWED BY JBL DATE 6-20-02

ASSUMPTIONS THAT REQUIRE CONFIRMATION _____ YES X NO

ASSUMPTIONS CONFIRMED BY _____ DATE _____

PRINT NAME, DATE AND INITIAL

Rev No	Affected Sheets	Prepared by Date	Checked by Date	Verified by Date

by: EG 6/20/02
JB 6/20/02

I. Scope and Purpose

Determine the head and air requirements for: (1) the alum transfer pump DP-201 which will be used to transfer alum from the alum storage tank TK-202 to the alum feed tank TK-201 via 2-inch plastic piping; and (2) the alum recirculation pump DP-202 which will be used to recirculate alum from the bottom of the alum storage tank up 12 feet to the top of the tank via 2-inch plastic piping. Head losses will be determined for the 2-inch piping and fittings assuming the pumps DP-201 and DP-202 will both be operating at a maximum flow rate of 20 gpm. Plot total change in head for each pump on the vendor pump performance curves.

II. References

Literature:

1. *Flow of Fluids through Valves, Fittings, and Pipe (Technical Paper No. 410)*, 25th Printing, Crane Co., 1991.

2. Wilden flow curves for Rubber-Fitted T8-2" Plastic Pump.

Design Documents and Drawings:

1. *Final Basis of Design/Design Analysis Report (100%) 700 to 2,000 GPM Water Treatment System, New Bedford Harbor Superfund Site*, Foster Wheeler Environmental Corporation, June 2002.

2. Drawing M-102, General Arrangement/Equipment Layout (New WTP).

III. Assumptions

1. Maximum flow rate of 20 gpm for both DP-201 and DP-202.
2. Piping consists of 2-inch PVC pipe.
3. Assume clean commercial steel pipe which will result in conservative friction losses compared to the plastic pipe that will be used.
4. Assume slurry being pumped has flow characteristics that are equivalent to water since solids concentrations are low (less than 5%).

IV. Solution

See attached calculation.

V. Results Summary

1. The Wilden T8-2" plastic pump will provide 20 gpm with an air consumption rate of approximately 10 scfm at 10 psig for both DP-201 and DP-202.
2. The Wilden T4-1½" plastic pump will provide 20 gpm with an air consumption rate of approximately 5 scfm at 10 psig for both DP-201 and DP-202.
3. The Wilden T2R-1" plastic pump will provide 20 gpm with an air consumption rate of approximately 10 scfm at 25 psig for DP-201, and 20 gpm with an air consumption rate of approximately 10 scfm at 30 psig for DP-202.

FOSTER WHEELER ENVIRONMENTAL CORPORATION

BY EG DATE 6/20/02 SHEET 3 OF 24

CHKD. BY JB DATE 6-20-02 OFS NO. DEPT. NO.

CLIENT USACE

PROJECT NBH Superfund Site – Water Treatment Facility

SUBJECT Pumps DP-201 & DP-202

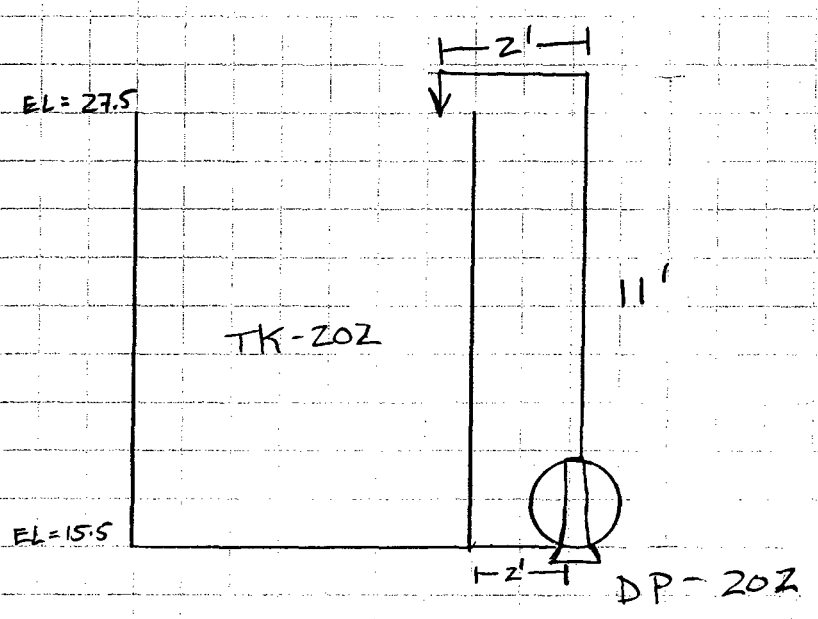

$\Delta Z_2 = 12$ ft

$L_2 = 15$ ft

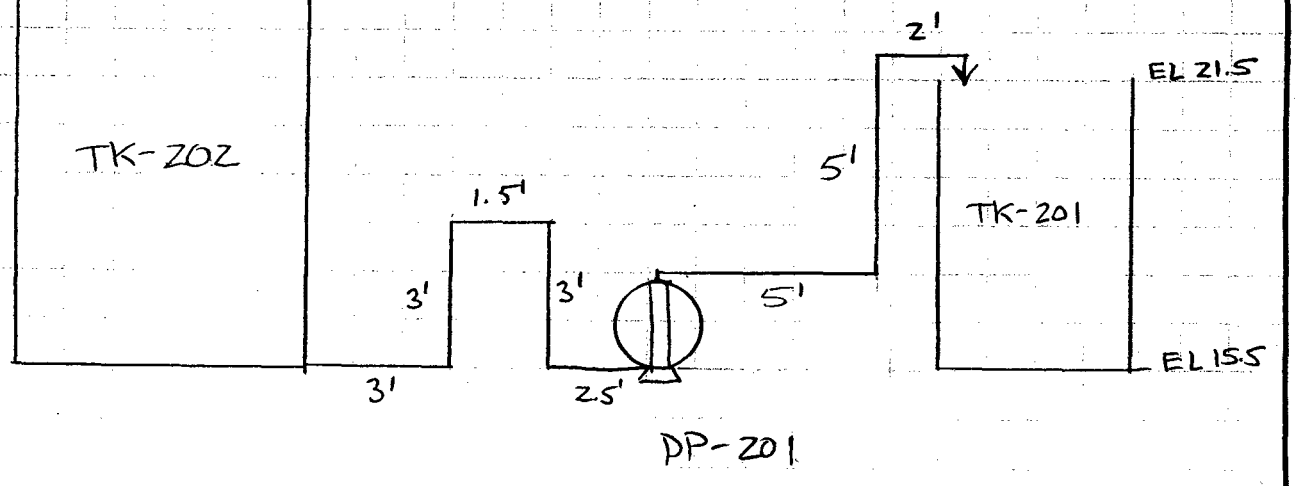

$\Delta Z_1 = 6$ ft

$L_1 = 25$ ft

FOSTER WHEELER ENVIRONMENTAL CORPORATION

BY EG DATE 6/20/02 SHEET 4 OF 24

CHKD. BY JB DATE 6/24/02 OFS NO. DEPT. NO.

CLIENT USACE

PROJECT NBH Superfund Site – Water Treatment Facility

SUBJECT Pumps DP-201 & DP-202

1. Alum transfer pump DP-201 will be used to transfer alum from the alum storage tank TK-202 to the alum feed tank TK-201 via 2-inch plastic piping.
$\Delta Z_1 = 21.5' - 15.5' = 6 ft.$ $L_1 = 25 ft.$

2. Alum recirculation pump DP-202 will be used to recirculate alum from the bottom of the alum storage tank TK-202 to the top of the tank.
$\Delta Z_2 = 27.5 - 15.5 = 12 ft.$ $L_2 = 15 ft.$

Bernoulli's Eqn:

$$\frac{P}{\rho} + \frac{V^2}{2g} + Z = \text{total head}$$

$$\frac{P_1}{\rho} + \frac{V_1^2}{2g} + Z_1 = \frac{P_2}{\rho} + \frac{V_2^2}{2g} + Z_2 + h_L$$

$\frac{P}{\rho}$ = pressure head

$\frac{V^2}{2g}$ = velocity head

Z = elevation (potential head)

h_L = head loss between points 1 and 2

Darcy - Weisbach formula (head loss for turbulent flow in pipes - Re > 3000):

$$h_L = f \frac{L}{D} \frac{V^2}{2g}$$

FOSTER WHEELER ENVIRONMENTAL CORPORATION

BY EG DATE 6/20/02 SHEET 5 OF 24

CHKD. BY JB DATE 6/20/02 OFS NO. DEPT. NO.

CLIENT USACE

PROJECT NBH Superfund Site – Water Treatment Facility

SUBJECT Pumps DP-201 + DP-202

Head loss for pipe, transitions, and fittings:

$$h_L = K \frac{V^2}{2g}$$

$$\therefore \boxed{K = f \frac{L}{D}} = \text{resistence coefficient}$$

$$h_L = K \frac{(Q^2/A^2)}{2g}$$

$$h_L = K \frac{Q^2}{2g\left(\frac{\pi d^2}{4}\right)^2}$$

if: $g = 32.2\ ft/s^2$

Q = flow rate (gpm)

d = pipe diameter (in)

$$\boxed{h_L = \frac{0.00259\ KQ^2}{d^4}}$$ Crane's pg 3-4

Find K-factor for pipe fittings – Crane's pg A-26 to A-29. For 2-inch pipe, friction factor $F_T = 0.019$. Assume same fittings for both DP-201 + DP-202 piping.

Element	Qty	Element K-factor	Extended K factor
entrance	1	0.78	0.78
elbow	4	$30 f_T$	2.28
ball valve	2	$3 f_T$	0.11
check valve	1	$50 f_T$	0.95
exit	1	1.0	1.0
			$\boxed{\Sigma\ 5.12}$

FOSTER WHEELER ENVIRONMENTAL CORPORATION

BY GG DATE 6/20/02 SHEET 6 OF 24

CHKD. BY JB DATE 6-20-02 OFS NO. DEPT. NO.

CLIENT USACE

PROJECT NBH Superfund Site – Water Treatment Facility

SUBJECT Pumps DP-201 + DP-202

Determine Reynold's number for Q = 20 gpm.

$$\boxed{Re = \frac{50.6\,Q\rho}{d\mu}}$$ Crane's pg 3-2

where: Q = flow rate (gpm)

ρ = density H_2O at 60°F = 62.4 pcf Crane's pg A-6

d = pipe diameter (in)

μ = viscocity H_2O at 60°F = 1.1 centipoise Crane's pg A-3

$$Re = \frac{(50.6)(20)(62.4)}{(2)(1.1)} = \boxed{28,704}$$

Friction factor for 2-inch pipe – Crane's pg A-25:

$$\boxed{f = 0.026}$$

K-factor for pipes L_1 + L_2:

$$K_{L_1} = 0.026\left(\frac{25\,ft}{2in \cdot \frac{ft}{12in}}\right) = \boxed{3.90}$$

$$K_{L_2} = 0.026\left(\frac{15\,ft}{2in \cdot \frac{ft}{12in}}\right) = \boxed{2.34}$$

FOSTER WHEELER ENVIRONMENTAL CORPORATION

BY EG DATE 6/20/02 SHEET 7 OF 24

CHKD. BY JB DATE 6/20/02 OFS NO. DEPT. NO.

CLIENT USACE

PROJECT NBH Superfund Site – Water Treatment Facility

SUBJECT Pumps DP-201 & DP-202

K-factors for entire systems (pipe + fittings):

$K_1 = 3.90 + 5.12 = \boxed{9.02}$

$K_2 = 2.34 + 5.12 = \boxed{7.46}$

$$\Delta \text{ Head} = \cancel{\frac{\Delta P}{\rho}}^{0} + \cancel{\frac{\Delta V^2}{2g}}^{0} + \Delta Z = h_L$$

$$h_L = \frac{0.00259\, KQ^2}{d^4}, \quad \Delta Z_1 = 6\text{ft}, \quad \Delta Z_2 = 12\text{ft}$$

$$\Delta H_{DP-201} = \frac{0.00259(9.02)(20)^2}{(2)^4} + 6\text{ ft} = \boxed{7\text{ ft}}$$

$$\Delta H_{DP-202} = \frac{0.00259(7.46)(20)^2}{(2)^4} + 12\text{ ft} = \boxed{12\text{ ft}}$$

Plot on pump curves for DP-201:

Pump	Air consumption	Pressure
Wilden T8-2"	~10 scfm	~10 psig
Wilden T4-1½"	~5 scfm	~10 psig
Wilden T2R-1"	~10 scfm	~25 psig

Plot on pump curves for DP-202:

Pump	Air consumption	Pressure
Wilden T8-2"	~10 scfm	~10 psig
Wilden T4-1½"	~5 scfm	~10 psig
Wilden T2R-1"	~10 scfm	~30 psig

by: EG 6/20/02
JB 6/20/02

Catalog : Plastic Pumps : T8 - 2" (50.8 mm) Plastic Pump : Flow Curves

Learn more about how to read a Wilden flow curve.

RUBBER-FITTED T8 PLASTIC PUMP

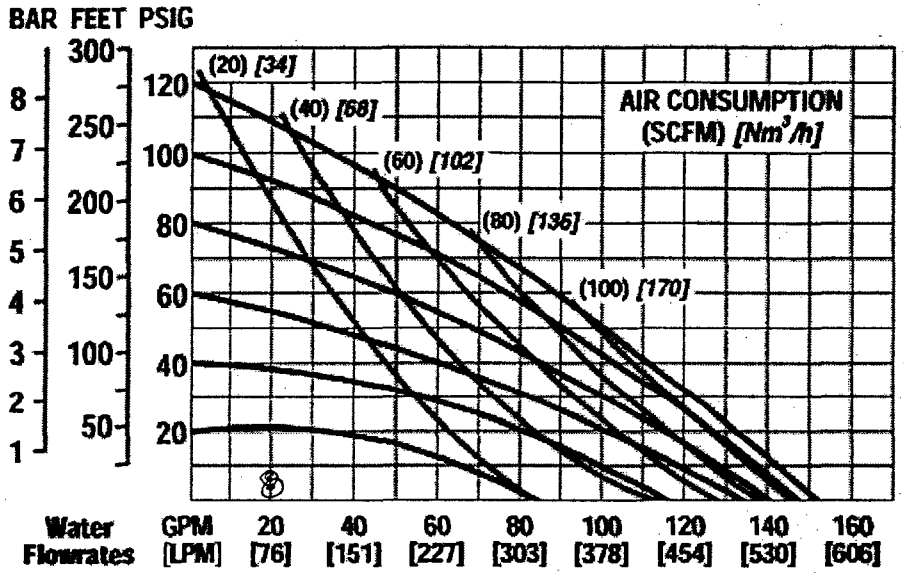

TEFLON®-FITTED T8 PLASTIC PUMP

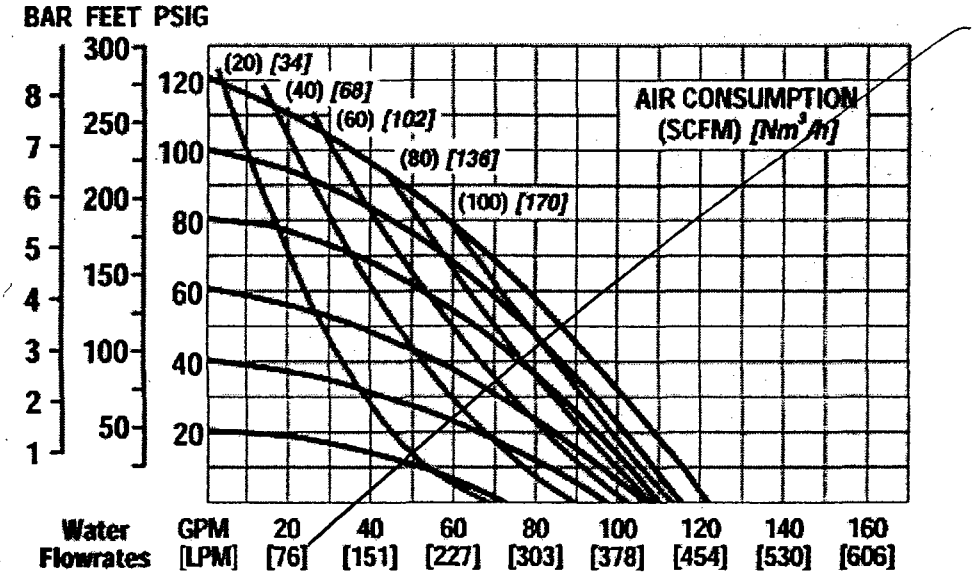

by: EG 6/20/02
JB 6/20/02

Catalog : Plastic Pumps : T8 - 2" (50.8 mm) Plastic Pump : Specifications

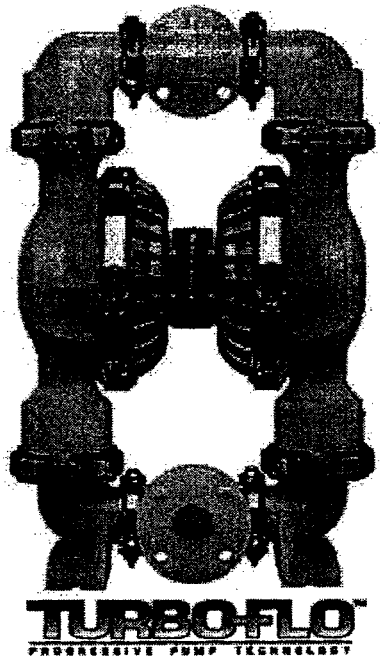

Click to Purchase

Flow Curves Drawings Pump User's Guide

Wilden T8 - 2" (50.8 mm) Plastic Pump

FLOW RATE TO 590.5 LPM (156 GPM)
MAX PRESSURE = 8.6 BAR (125 PSI)

WETTED HOUSINGS
(Water Chambers and Manifolds)

Material	Ship Wt
Polyproylene	35.4 kg (77.0 lbs)
PVDF	44.6 kg (97.0 lbs)

NON-WETTED HOUSINGS

Description	Material
Center Block	Polypropylene, Aluminum, Nickel-plated Aluminum, or Stainless Steel
Air Valve	Brass, Teflon®-coated Brass, Nickel-plated Brass, or Stainless Steel

MAXIMUM SUCTION LIFT CAPABILITY
5.8 m (19')

MAXIMUM DIAMETER SOLIDS
6.35 mm (1/4")

ELASTOMER OPTIONS

Material	Temperature Limits
Buna-N®	-12.2 (+10) to +65.6 (+150) °C (F°)
Neoprene	-17.8 (+0) to +93.3 (+200) °C (F°)
Nordel®	-51.1 (-60) to +137.8 (+280) °C (F°)
Polyurethane	-12.2 (+10) to +65.6 (+150) °C (F°)
Saniflex™	-28.9 (+20) to +104.4 (+220) °C (F°)
Teflon® PTFE	+4.4 (+40) to +104.4 (+220) °C (F°)
Viton®	-40 (-40) to +176.7 (+350) °C (F°)
Wil-Flex™	-40 (-40) to +107.2 (+225) °C (F°)

DXF DRAWINGS (CAD REQUIRED)

T8 Turbo-Flo™ Plastic 279 k

ENGINEERING OPERATION & MAINTENANCE MANUAL

T8/A8 Plastic 766 k

BLACK & WHITE FLYERS (PDF FILE)

T8 Plastic Pump 117 k

GENERAL SPECIFICATIONS (PDF FILE)

by: EG 6/20/02
xB 6/20/02

Catalog : Plastic Pumps : T8 - 2" (50.8 mm) Plastic Pump : Dimensional Drawings

Dimensions for T8 - 2" (50.8 mm) Plastic Pump

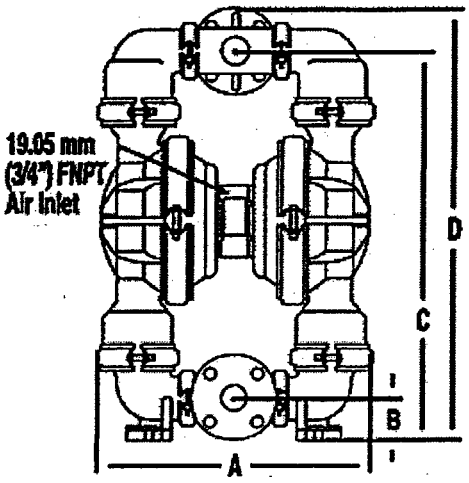

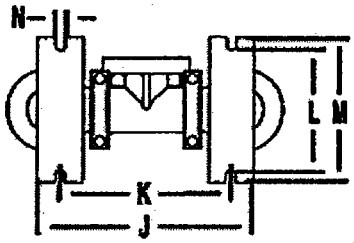

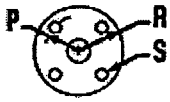

Flange
150 pound class
50.8 mm (2") I.D.

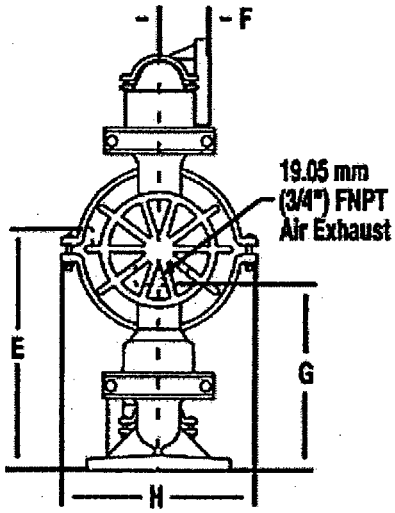

DIMENSIONS - T8 PLASTIC

ITEM	METRIC (mm)	STANDARD (inch)
A	491.3	19 11/32
B	77.0	3 1/32
C	693.0	27 9/32
D	770.0	30 5/16
E	446.1	7 9/16
F	88.9	3 1/2
G	344.5	13 9/16
H	332.6	13 3/32
J	386.6	15 7/32
K	306.4	12 1/16
L	228.6	9
M	254.0	10
N	14.3	9/16
	INT L.	STANDARD
P	60.3 RAD.	2 3/8 RAD.
R	76.2 RAD.	3 1/32 RAD.
S	19.8 DIA.	25/32 DIA.

T-section is designed to accommodate both DIN and ANSI pipe connections.

Privacy Policy © Wilden Pump & Engineering Company. All Rights Reserved. Online Tech Support

by: EG 6/20/02
JB 6/20/02

Catalog : Plastic Pumps : T4 - 1 1/2" (38.1 mm) Plastic Pump : Flow Curves

Learn more about how to read a Wilden flow curve.

RUBBER-FITTED T4 PLASTIC PUMP

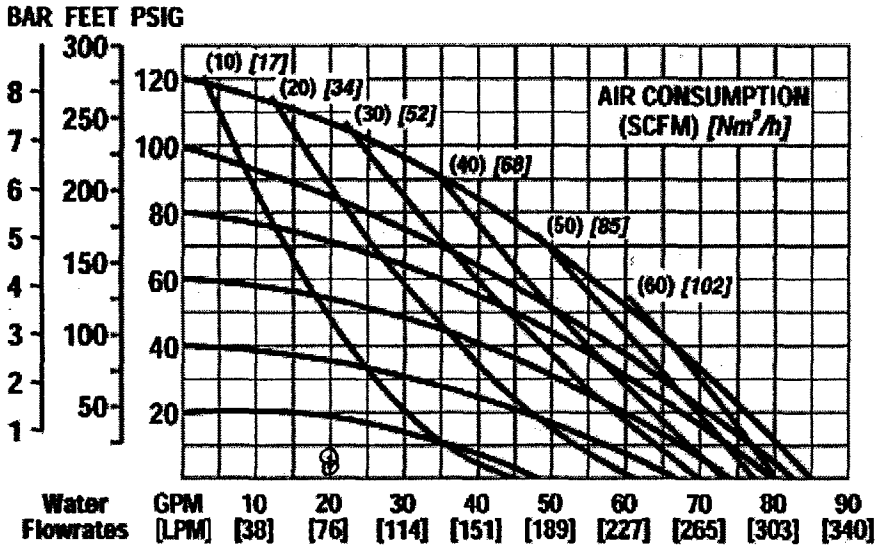

TEFLON®-FITTED T4 PLASTIC PUMP

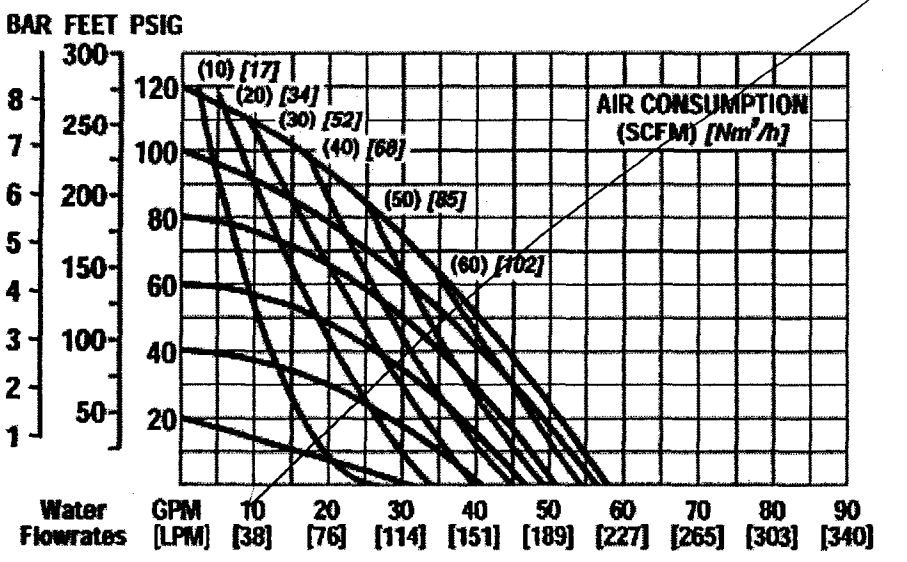

by: EG 6/20/02
JB 6/20/02

Catalog : Plastic Pumps : T4 - 1 1/2" (38.1 mm) Plastic Pump : Specifications

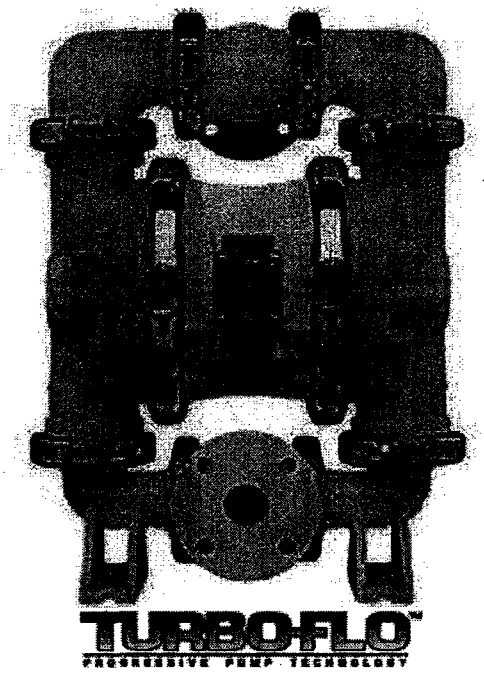

Click to Purchase

Flow Curves Drawings Pump User's Guide

Wilden T4 - 1 1/2" (38.1 mm) Plastic Pump

FLOW RATE TO 325.5 LPM (86 GPM)
MAX PRESSURE = 8.6 BAR (125 PSI)

WETTED HOUSINGS
(Water Chambers and Manifolds)

Material	Ship Wt
Polyproylene	17.5 kg (38.0 lbs)
PVDF	22.5 kg (49.0 lbs)
Teflon® PFA	23.9 kg (52.0 lbs)

NON-WETTED HOUSINGS

Description	Material
Center Section	Polypropylene
Air Valve	Brass, Teflon®-coated Brass, Nickel-plated Brass, or Stainless Steel

MAXIMUM SUCTION LIFT CAPABILITY
4.9 m (16')

MAXIMUM DIAMETER SOLIDS
4.76 mm (3/16")

ELASTOMER OPTIONS

Material	Temperature Limits
Buna-N®	-12.2 (+10) to +65.6 (+150) °C (F°)
Neoprene	-17.8 (+0) to +93.3 (+200) °C (F°)
Nordel®	-51.1 (-60) to +137.8 (+280) °C (F°)
Polyurethane	-12.2 (+10) to +65.6 (+150) °C (F°)
Saniflex™	-28.9 (+20) to +104.4 (+220) °C (F°)
Teflon® PTFE	+4.4 (+40) to +104.4 (+220) °C (F°)
Viton®	-40 (-40) to +176.7 (+350) °C (F°)
Wil-Flex™	-40 (-40) to +107.2 (+225) °C (F°)

DXF DRAWINGS (CAD REQUIRED)

T4 Turbo-Flo™ Plastic 248 k

ENGINEERING OPERATION & MAINTENANCE MANUAL

T4/A4 Plastic 756 k

BLACK & WHITE FLYERS (PDF FILE)

T4 Plastic Pump 121 k

by: GG 6/20/02
JB 6/20/02

Catalog : Plastic Pumps : T4 - 1 1/2" (38.1 mm) Plastic Pump : Dimensional Drawings

Dimensions for T4 - 1 1/2" (38.1 mm) Plastic Pump

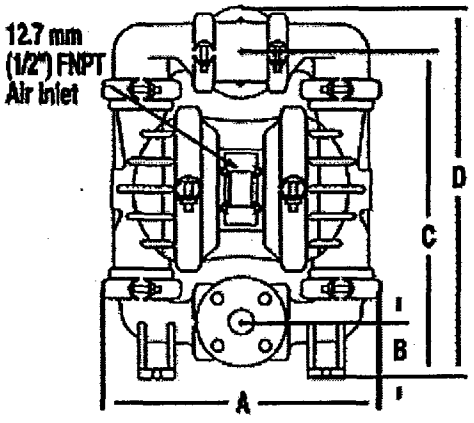

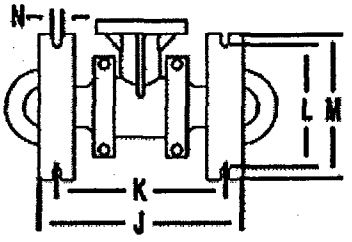

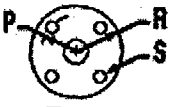

Flange
150 pound class
38.1 mm (1 1/2") I.D.

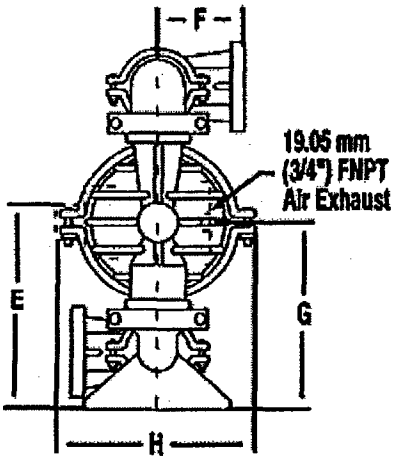

DIMENSIONS - T4 PLASTIC

ITEM	METRIC (mm)	STANDARD (inch)
A	393.7	15 1/2
B	79.4	3 1/8
C	463.6	18 1/4
D	527.1	20 3/4
E	295.3	11 5/8
F	120.7	4 3/4
G	269.1	10 19/32
H	284.2	11 3/16
J	287.4	11 5/16
K	237.3	9 11/32
L	181.0	7 1/8
M	204.8	8 1/16
N	11.9	15/32
	INT L.	STANDARD
P	55.2 RAD.	1 15/16 RAD.
R	75.2 RAD.	2 1/2 RAD.
S	18.0 DIA.	9/16 DIA.

DIN type flanges available for liquid inlet and discharge.

Refer to the EOM manual for TPE and Ultra-Flex™ performance curves.

© Wilden Pump & Engineering Company. All Rights Reserved. Online Tech Support

by: EG 6/20/02
JB 6/20/02

Catalog : Plastic Pumps : T2R - 1" (25.4 mm) Plastic Pump : Flow Curves

Learn more about how to read a Wilden flow curve.

RUBBER-FITTED T2R PLASTIC PUMP

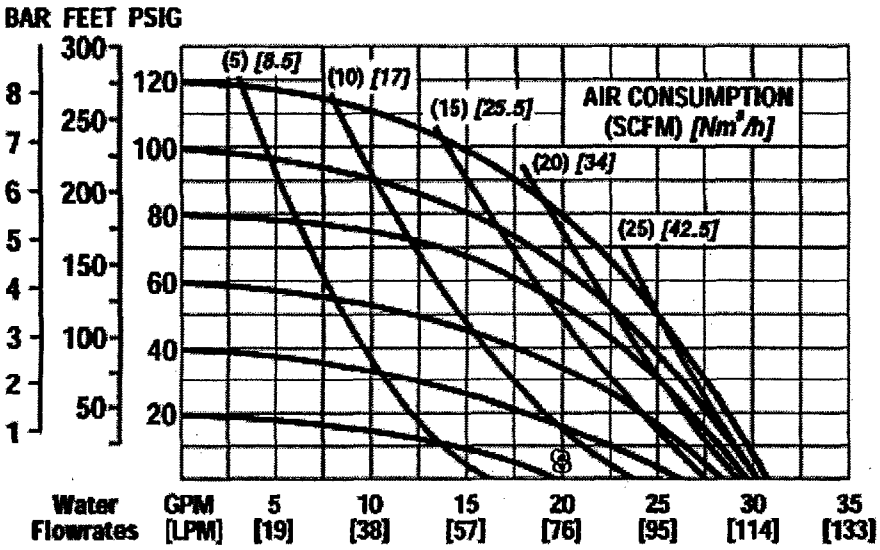

TEFLON®-FITTED T2R PLASTIC PUMP

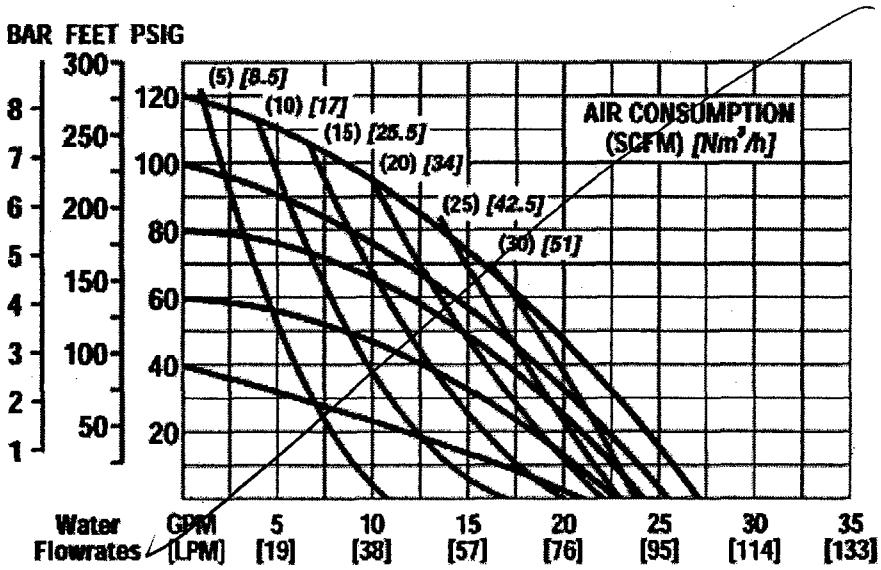

by: EG 6/20/02
JB 6/20/02

Catalog : Plastic Pumps : T2R - 1" (25.4 mm) Plastic Pump : Specifications

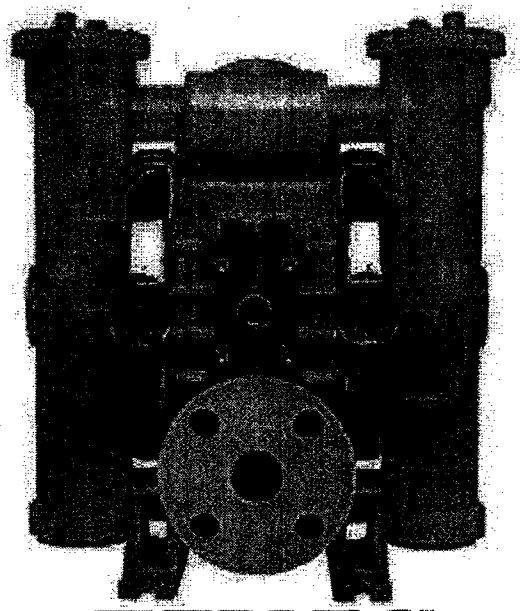

TURBO-FLO™ PROGRESSIVE PUMP TECHNOLOGY

Click to Purchase

Flow Curves Drawings Pump User's Guide

Wilden T2R - 1" (25.4 mm) Plastic Pump

FLOW RATE TO 113.6 LPM (30 GPM)
MAX PRESSURE = 8.6 BAR (125 PSI)

WETTED HOUSINGS
(Water Chambers and Manifolds)

Material	Ship Wt
Polyproylene	8.7 kg (19.0 lbs)
PVDF	10.1 kg (22.0 lbs)

NON-WETTED HOUSINGS

Description	Material
Center Section	Polypropylene
Air Valve	Brass, Teflon®-coated Brass, or Nickel-plated Brass

MAXIMUM SUCTION LIFT CAPABILITY
5.2 m (18')

MAXIMUM DIAMETER SOLIDS
3.17 mm (1/8")

ELASTOMER OPTIONS

Material	Temperature Limits
Buna-N®	-12.2 (+10) to +65.6 (+150) °C (F°)
Neoprene	-17.8 (+0) to +93.3 (+200) °C (F°)
Nordel®	-51.1 (-60) to +137.8 (+280) °C (F°)
Polyurethane	-12.2 (+10) to +65.6 (+150) °C (F°)
Saniflex™	-28.9 (+20) to +104.4 (+220) °C (F°)
Teflon® PTFE	+4.4 (+40) to +104.4 (+220) °C (F°)
Viton®	-40 (-40) to +176.7 (+350) °C (F°)
Wil-Flex™	-40 (-40) to +107.2 (+225) °C (F°)

DXF DRAWINGS (CAD REQUIRED)

T2 Turbo-Flo™ Plastic 217 k

ENGINEERING OPERATION & MAINTENANCE MANUAL

A2 Plastic 1400 k

BLACK & WHITE FLYERS (PDF FILE)

T2R Plastic Pump 115 k

GENERAL SPECIFICATIONS (PDF FILE)

by: EG 6/20/02
JB 6/20/02

Catalog : Plastic Pumps : T2R - 1" (25.4 mm) Plastic Pump : Dimensional Drawings

Dimensions for T2R - 1" (25.4 mm) Plastic Pump

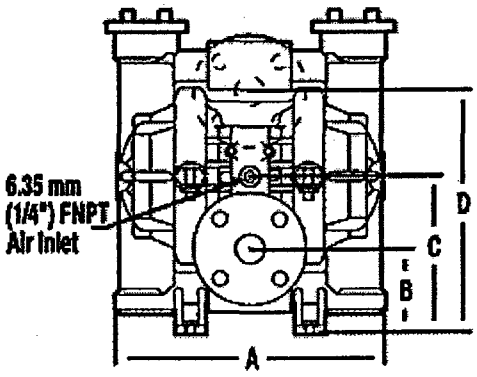

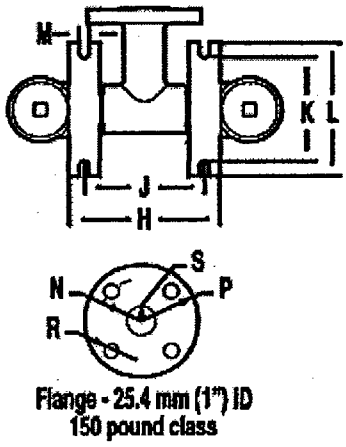

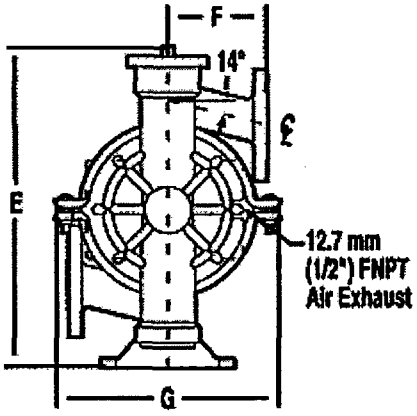

DIMENSIONS - T2R PLASTIC

ITEM	METRIC (mm)	STANDARD (inch)
A	279.0	11
B	73.8	2 29/32
C	161.8	6 3/8
D	252.2	9 15/16
E	304.8	12
F	106.3	4 3/16
G	238.1	9 3/8
H	157.2	6 3/16
J	124.5	4 29/32
K	115.1	4 17/32
L	138.1	5 7/16
M	9.5	3/8
	INT L.	STANDARD
N	42.4 RAD.	1 9/16 RAD.
P	57.2 RAD.	2 1/4 RAD.
R	14.3 DIA.	5/8 DIA.
S	25.4	1

DIN type flanges available for liquid inlet and discharge.

Refer to the EOM manual for TPE performance curve.

Privacy Policy © Wilden Pump & Engineering Company. All Rights Reserved. Online Tech Support

by: EG 6/20/02
JB 6/20/02

Summary of Formulas — continued

● Head loss and pressure drop through valves and fittings

Head loss through valves and fittings is generally given in terms of resistance coefficient K which indicates static head loss through a valve in terms of "velocity head", or, equivalent length in pipe diameters L/D that will cause the same head loss as the valve.

From Darcy's formula, head loss through a pipe is:

$$h_L = f \frac{L}{D} \frac{v^2}{2g} \qquad \textit{Equation 3-5}$$

and head loss through a valve is:

$$h_L = K \frac{v^2}{2g} \qquad \textit{Equation 3-14}$$

therefore: $$K = f \frac{L}{D} \qquad \textit{Equation 3-15}$$

To eliminate needless duplication of formulas, the following are all given in terms of K. Whenever necessary, substitute $(f\,L/D)$ for (K).

$$h_L = \frac{522\,Kq^2}{d^4} = 0.002\,59\,\frac{KQ^2}{d^4} \qquad \textit{Equation 3-14}$$

$$h_L = 0.001\,270\,\frac{KB^2}{d^4} = 0.000\,0403\,\frac{K\dot{W}^2\overline{V}^2}{d^4}$$

$$\Delta P = 0.000\,1078\,K\rho v^2 = 0.000\,000\,0300\,K\rho V^2$$

$$\Delta P = 3.62\,\frac{K\rho q^2}{d^4} = 0.000\,017\,99\,\frac{K\rho Q^2}{d^4}$$

$$\Delta P = 0.000\,008\,82\,\frac{K\rho B^2}{d^4}$$

$$\Delta P = 0.000\,000\,280\,\frac{K\dot{W}^2\overline{V}}{d^4}$$

$$\Delta P = 0.000\,000\,000\,605\,\frac{K(q'_h)^2\,T\,S_g}{d^4\,P'}$$

$$\Delta P = 0.000\,000\,001\,633\,\frac{K\,(q'_h)^2\,S_g^2}{d^4\,\rho}$$

For compressible flow with h_L or ΔP greater than approximately 10% of inlet absolute pressure, the denominator should be multiplied by Y^2. For values of Y, see page A-22.

● Pressure drop and flow of liquids of low viscosity using flow coefficient

$$\Delta P = \left(\frac{Q}{C_v}\right)^2 \frac{\rho}{62.4} \qquad \textit{Equation 3-16}$$

$$Q = C_v\sqrt{\Delta P\,\frac{62.4}{\rho}} = 7.90\,C_v\sqrt{\frac{\Delta P}{\rho}}$$

$$C_v = Q\sqrt{\frac{\rho}{\Delta P\,(62.4)}} = \frac{29.9\,d^2}{\sqrt{f\,L/D}} = \frac{29.9\,d^2}{\sqrt{K}}$$

$$K = \frac{891\,d^4}{(C_v)^2}$$

● Resistance coefficient, K, for sudden and gradual enlargements in pipes

If, $\theta \leq 45°$,

$$K_1 = 2.6 \sin\frac{\theta}{2}\,(1 - \beta^2)^2 \qquad \textit{*Equation 3-17}$$

If, $45° < \theta \leq 180°$,

$$K_1 = (1 - \beta^2)^2 \qquad \textit{*Equation 3-17.1}$$

● Resistance coefficient, K, for sudden and gradual contractions in pipes

If, $\theta \leq 45°$,

$$K_1 = 0.8 \sin\frac{\theta}{2}\,(1 - \beta^2) \qquad \textit{*Equation 3-18}$$

If, $45° < \theta \leq 180°$,

$$K_1 = 0.5\sqrt{\sin\frac{\theta}{2}}\,(1 - \beta^2) \qquad \textit{*Equation 3-18.1}$$

**Note:* The values of the resistance coefficients (K) in equations 3-17, 3-17.1, 3-18, and 3-18.1 are based on the velocity in the small pipe. To determine K values in terms of the greater diameter, divide the equations by β^4.

● Discharge of fluid through valves, fittings, and pipe; Darcy's formula

Liquid flow: *Equation 3-19*

$$q = 0.0438\,d^2\sqrt{\frac{h_L}{K}} = 0.525\,d^2\sqrt{\frac{\Delta P}{K\rho}}$$

$$Q = 19.65\,d^2\sqrt{\frac{h_L}{K}} = 236\,d^2\sqrt{\frac{\Delta P}{K\rho}}$$

$$w = 0.0438\,\rho d^2\sqrt{\frac{h_L}{K}} = 0.525\,d^2\sqrt{\frac{\Delta P\rho}{K}}$$

$$W = 157.6\,\rho d^2\sqrt{\frac{h_L}{K}} = 1891\,d^2\sqrt{\frac{\Delta P\rho}{K}}$$

Compressible flow:

$$q'_h = 40\,700\,Yd^2\sqrt{\frac{\Delta P\,P'_1}{KT_1\,S_g}} \qquad \textit{Equation 3-20}$$

$$q'_h = 24\,700\,\frac{Yd^2}{S_g}\sqrt{\frac{\Delta P\,\rho_1}{K}}$$

$$q'_m = 678\,Yd^2\sqrt{\frac{\Delta P\,P'_1}{KT_1\,S_g}} = 412\,\frac{Yd^2}{S_g}\sqrt{\frac{\Delta P\,\rho_1}{K}}$$

$$q' = 11.30\,Yd^2\sqrt{\frac{\Delta P P'_1}{KT_1\,S_g}} = 6.87\,\frac{Yd^2}{S_g}\sqrt{\frac{\Delta P\rho_1}{K}}$$

$$w = 0.525\,Yd^2\sqrt{\frac{\Delta P}{K\overline{V}_1}} \qquad W = 1891\,Yd^2\sqrt{\frac{\Delta P}{K\overline{V}_1}}$$

Values of Y are shown on page A-22. For K, Y, and ΔP determination, see examples on pages 4-13 and 4-14.

by: EG 6/20/02
JB 6/20/02

18/24

Viscosity of Water and Liquid Petroleum Products[8, 12, 23]

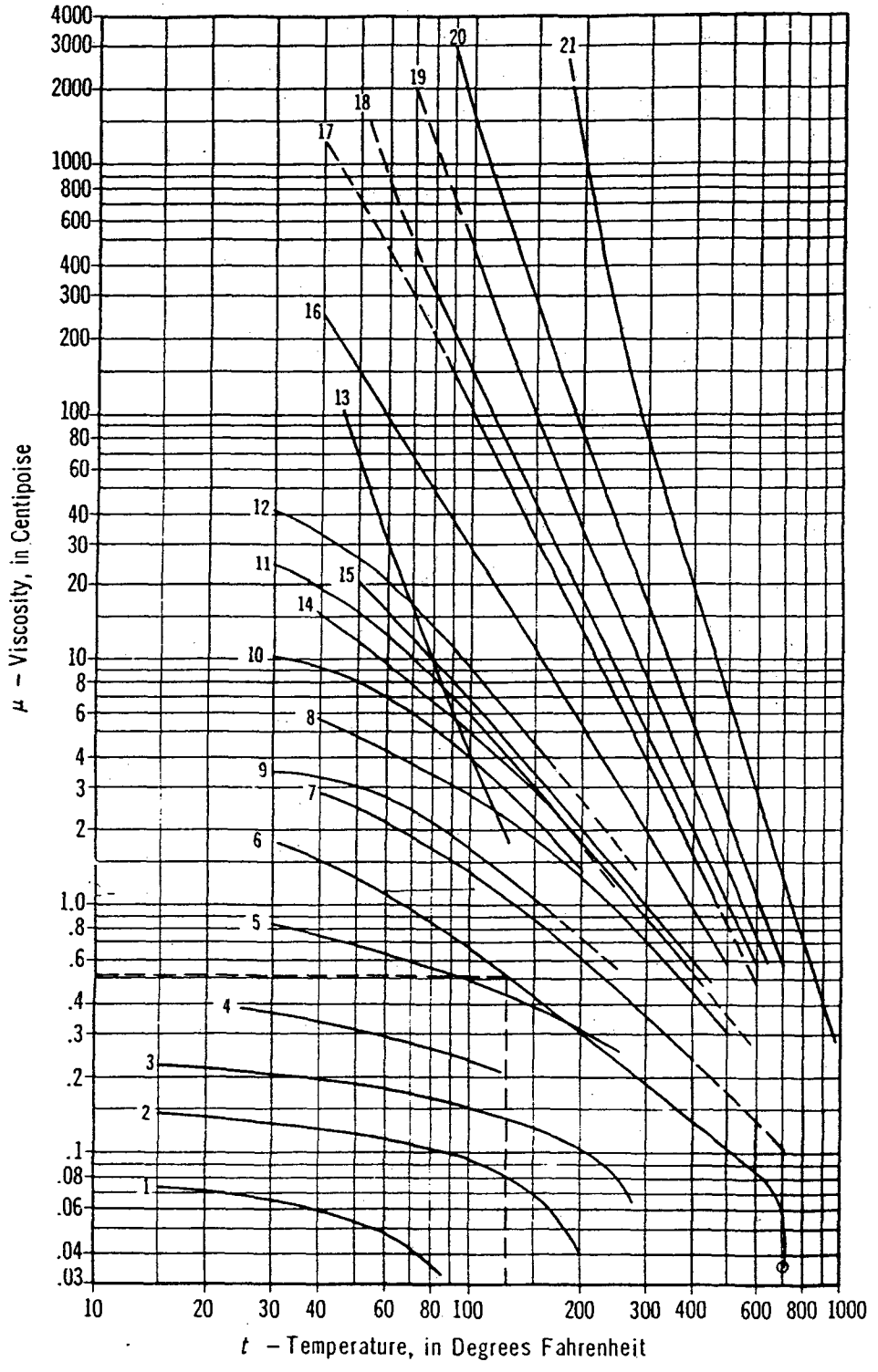

1. Ethane (C_2H_6)
2. Propane (C_3H_8)
3. Butane (C_4H_{10})
4. Natural Gasoline
5. Gasoline
6. Water
7. Kerosene
8. Distillate
9. 48 Deg. API Crude
10. 40 Deg. API Crude
11. 35.6 Deg. API Crude
12. 32.6 Deg. API Crude
13. Salt Creek Crude
14. Fuel 3 (Max.)
15. Fuel 5 (Min.)
16. SAE 10 Lube (100 V.I.)
17. SAE 30 Lube (100 V.I.)
18. Fuel 5 (Max.) or Fuel 6 (Min.)
19. SAE 70 Lube (100 V.I.)
20. Bunker C Fuel (Max.) and M.C. Residuum
21. Asphalt

Data extracted in part by permission from the Oil and Gas Journal.

Example: The viscosity of water at 125 F is 0.52 centipoise (Curve No. 6).

by: EG 6/20/02
JB 6/20/02

19/24

Physical Properties of Water

Temperature of Water t Degrees Fahrenheit	Saturation Pressure P' Pounds per Square Inch Absolute	Specific Volume $\overline{V}$ Cubic Feet Per Pound	Weight Density ρ Pounds per Cubic Foot	Weight Pounds Per Gallon
32	0.08859	0.016022	62.414	8.3436
40	0.12163	0.016019	62.426	8.3451
50	0.17796	0.016023	62.410	8.3430
60	0.25611	0.016033	62.371	8.3378
70	0.36292	0.016050	62.305	8.3290
80	0.50683	0.016072	62.220	8.3176
90	0.69813	0.016099	62.116	8.3037
100	0.94924	0.016130	61.996	8.2877
110	1.2750	0.016165	61.862	8.2698
120	1.6927	0.016204	61.7132	8.2498
130	2.2230	0.016247	61.550	8.2280
140	2.8892	0.016293	61.376	8.2048
150	3.7184	0.016343	61.188	8.1797
160	4.7414	0.016395	60.994	8.1537
170	5.9926	0.016451	60.787	8.1260
180	7.5110	0.016510	60.569	8.0969
190	9.340	0.016572	60.343	8.0667
200	11.526	0.016637	60.107	8.0351
210	14.123	0.016705	59.862	8.0024
212	14.696	0.016719	59.812	7.9957
220	17.186	0.016775	59.613	7.9690
240	24.968	0.016926	59.081	7.8979
260	35.427	0.017089	58.517	7.8226
280	49.200	0.017264	57.924	7.7433
300	67.005	0.01745	57.307	7.6608
350	134.604	0.01799	55.586	7.4308
400	247.259	0.01864	53.648	7.1717
450	422.55	0.01943	51.467	6.8801
500	680.86	0.02043	48.948	6.5433
550	1045.43	0.02176	45.956	6.1434
600	1543.2	0.02364	42.301	5.6548
650	2208.4	0.02674	37.397	4.9993
700	3094.3	0.03662	27.307	3.6505

Specific gravity of water at 60 F = 1.00

Weight per gallon is based on 7.48052 gallons per cubic foot.

All data on volume and pressure are abstracted from ASME Steam Tables (1967), with permission of publisher, The American Society of Mechanical Engineers, New York, N.Y.

bb: EG 6/20/02
JB 6/20/02

20/24

Friction Factors for Clean Commercial Steel Pipe[18]

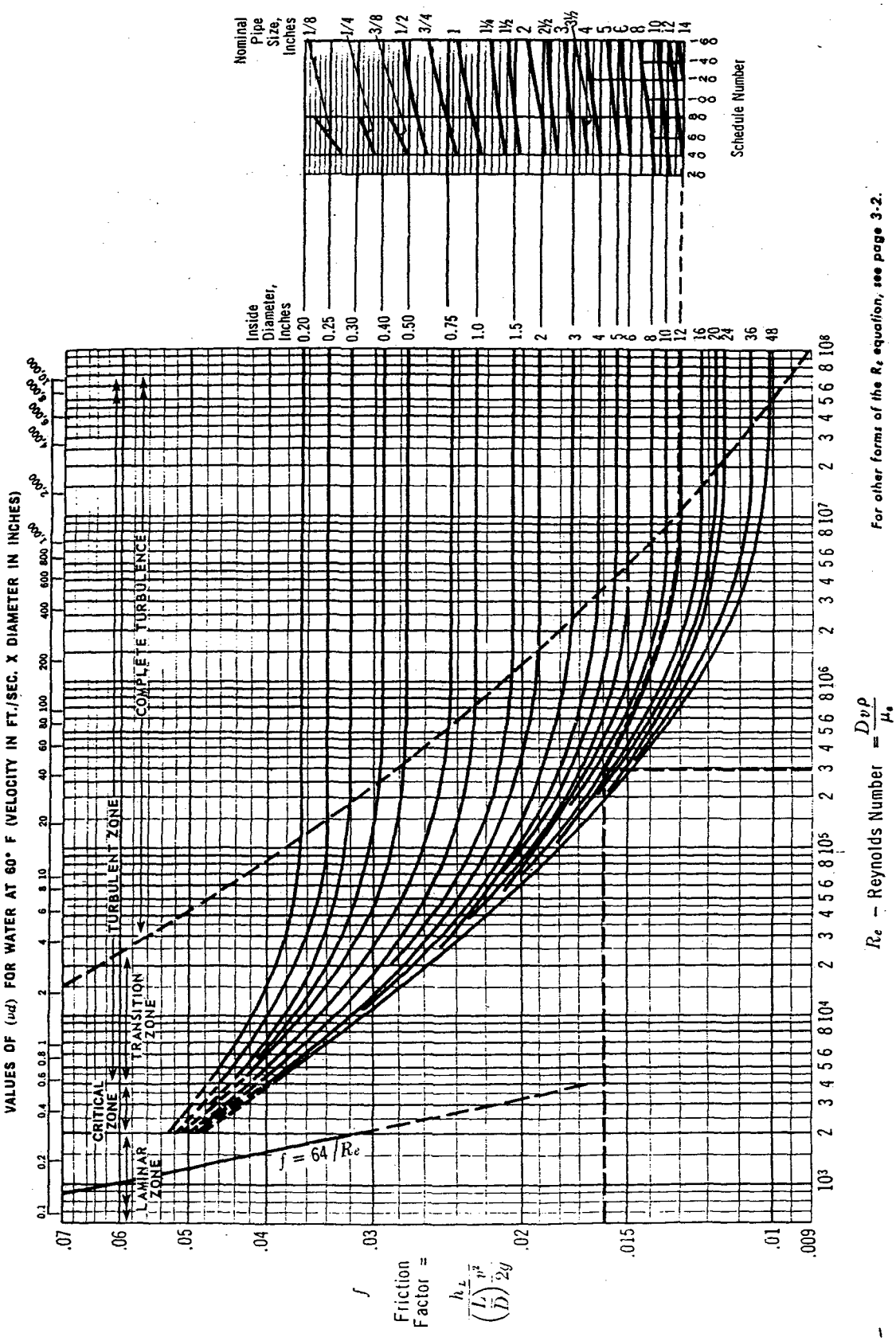

Problem: Determine the friction factor for 12-inch Schedule 40 pipe at a flow having a Reynolds number of 300,000.

Solution: The friction factor (f) equals 0.016.

bb: GK 6/20/02
JB 6/20/02

21/24

"K" FACTOR TABLE—SHEET 1 of 4

Representative Resistance Coefficients (K) for Valves and Fittings

("K" is based on use of schedule pipe as listed on page 2-10)

PIPE FRICTION DATA FOR CLEAN COMMERCIAL STEEL PIPE WITH FLOW IN ZONE OF COMPLETE TURBULENCE

Nominal Size	½"	¾"	1"	1¼"	1½"	2"	2½, 3"	4"	5"	6"	8-10"	12-16"	18-24"
Friction Factor (f_T)	.027	.025	.023	.022	.021	.019	.018	.017	.016	.015	.014	.013	.012

FORMULAS FOR CALCULATING "K" FACTORS* FOR VALVES AND FITTINGS WITH REDUCED PORT

(Ref: Pages 2-11 and 3-4)

- **Formula 1**

$$K_2 = \frac{0.8\left(\sin\frac{\theta}{2}\right)(1-\beta^2)}{\beta^4} = \frac{K_1}{\beta^4}$$

- **Formula 2**

$$K_2 = \frac{0.5\,(1-\beta^2)\sqrt{\sin\frac{\theta}{2}}}{\beta^4} = \frac{K_1}{\beta^4}$$

- **Formula 3**

$$K_2 = \frac{2.6\left(\sin\frac{\theta}{2}\right)(1-\beta^2)^2}{\beta^4} = \frac{K_1}{\beta^4}$$

- **Formula 4**

$$K_2 = \frac{(1-\beta^2)^2}{\beta^4} = \frac{K_1}{\beta^4}$$

- **Formula 5**

$$K_2 = \frac{K_1}{\beta^4} + \text{Formula 1} + \text{Formula 3}$$

$$K_2 = \frac{K_1 + \sin\frac{\theta}{2}[0.8\,(1-\beta^2) + 2.6\,(1-\beta^2)^2]}{\beta^4}$$

- **Formula 6**

$$K_2 = \frac{K_1}{\beta^4} + \text{Formula 2} + \text{Formula 4}$$

$$K_2 = \frac{K_1 + 0.5\sqrt{\sin\frac{\theta}{2}}\,(1-\beta^2) + (1-\beta^2)^2}{\beta^4}$$

- **Formula 7**

$$K_2 = \frac{K_1}{\beta^4} + \beta\,(\text{Formula 2} + \text{Formula 4}) \text{ when } \theta = 180^\circ$$

$$K_2 = \frac{K_1 + \beta\left[0.5\,(1-\beta^2) + (1-\beta^2)^2\right]}{\beta^4}$$

$$\beta = \frac{d_1}{d_2}$$

$$\beta^2 = \left(\frac{d_1}{d_2}\right)^2 = \frac{a_1}{a_2}$$

Subscript 1 defines dimensions and coefficients with reference to the smaller diameter.
Subscript 2 refers to the larger diameter.

***Use "K" furnished by valve or fitting supplier when available.**

SUDDEN AND GRADUAL CONTRACTION

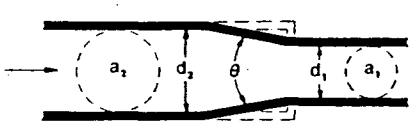

If: $\theta \leq 45^\circ$ . . . . . K_2 = Formula 1

$45^\circ < \theta \leq 180^\circ$ . . . K_2 = Formula 2

SUDDEN AND GRADUAL ENLARGEMENT

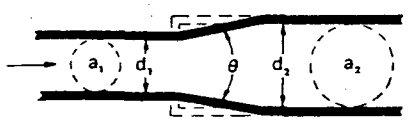

If: $\theta \leq 45^\circ$ . . . . . K_2 = Formula 3

$45^\circ < \theta \leq 180^\circ$ . . . K_2 = Formula 4

by: EG 6/20/02
JB 6/21/02

22/24

"K" FACTOR TABLE—SHEET 2 of 4

Representative Resistance Coefficients (K) for Valves and Fittings

(for formulas and friction data, see page A-26)

("K" is based on use of schedule pipe as listed on page 2-10)

GATE VALVES
Wedge Disc, Double Disc, or Plug Type

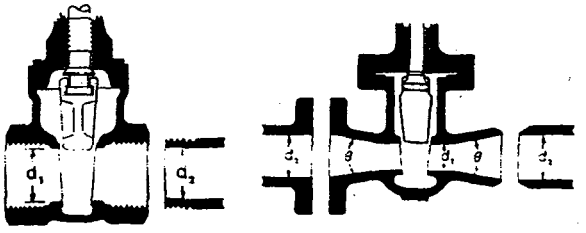

If: $\beta = 1$, $\theta = 0$ . . . . . $K_1 = 8 f_T$

$\beta < 1$ and $\theta \gtrsim 45°$ . . . . . K_2 = Formula 5

$\beta < 1$ and $45° < \theta \gtrsim 180°$ . . . K_2 = Formula 6

SWING CHECK VALVES

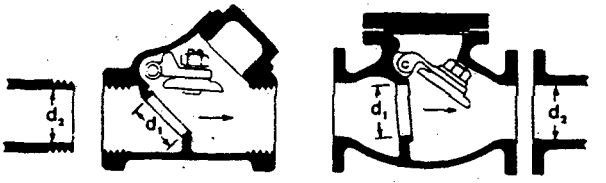

$K = 100 f_T$

Minimum pipe velocity (fps) for full disc lift $= 35 \sqrt{\bar{V}}$

$K = 50 f_T$

Minimum pipe velocity (fps) for full disc lift $= 60 \sqrt{\bar{V}}$ except U/L listed $= 100 \sqrt{\bar{V}}$

GLOBE AND ANGLE VALVES

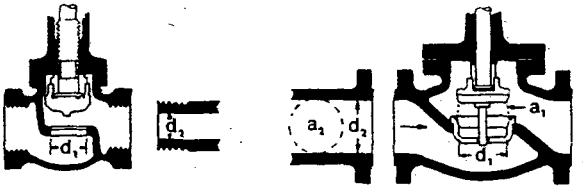

If: $\beta = 1 \ldots K_1 = 340 f_T$

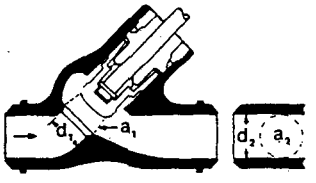

If: $\beta = 1 \ldots K_1 = 55 f_T$

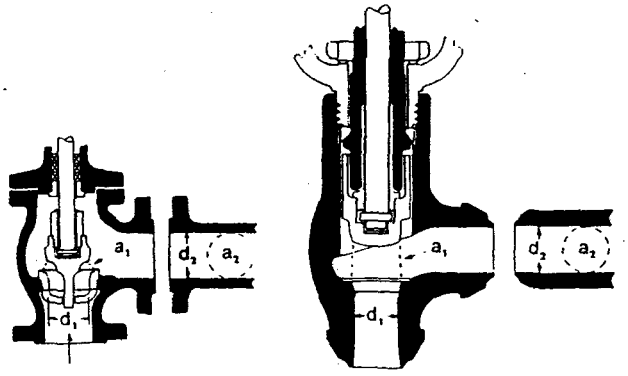

If: $\beta = 1 \ldots K_1 = 150 f_T$ If: $\beta = 1 \ldots K_1 = 55 f_T$

All globe and angle valves, whether reduced seat or throttled,

If: $\beta < 1 \ldots K_2$ = Formula 7

LIFT CHECK VALVES

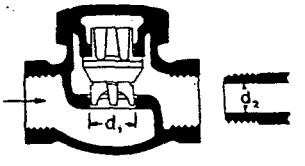

If: $\beta = 1 \ldots K_1 = 600 f_T$

$\beta < 1 \ldots K_2$ = Formula 7

Minimum pipe velocity (fps) for full disc lift $= 40 \beta^2 \sqrt{\bar{V}}$

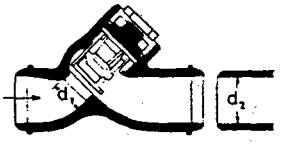

If: $\beta = 1 \ldots K_1 = 55 f_T$

$\beta < 1 \ldots K_2$ = Formula 7

Minimum pipe velocity (fps) for full disc lift $= 140 \beta^2 \sqrt{\bar{V}}$

TILTING DISC CHECK VALVES

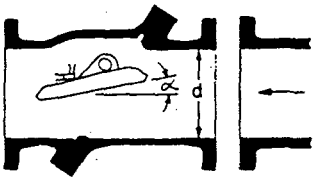

	$\alpha = 5°$	$\alpha = 15°$
Sizes 2 to 8" . . . K =	$40 f_T$	$120 f_T$
Sizes 10 to 14" . . . K =	$30 f_T$	$90 f_T$
Sizes 16 to 48" . . . K =	$20 f_T$	$60 f_T$
Minimum pipe velocity (fps) for full disc lift =	$80 \sqrt{\bar{V}}$	$30 \sqrt{\bar{V}}$

by: EG 6/20/02
JB 6/21/02

23/24

"K" FACTOR TABLE—SHEET 3 of 4

Representative Resistance Coefficients (K) for Valves and Fittings

(for formulas and friction data, see page A-26)

("K" is based on use of scheduled pipe as listed on page 2-10)

STOP-CHECK VALVES (Globe and Angle Types)

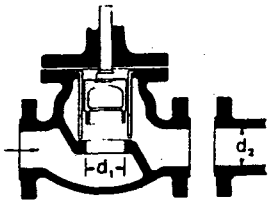

If:
$\beta = 1 \ldots K_1 = 400\, f_T$
$\beta < 1 \ldots K_2 =$ Formula 7

Minimum pipe velocity for full disc lift
$= 55\, \beta^2 \sqrt{\bar{V}}$

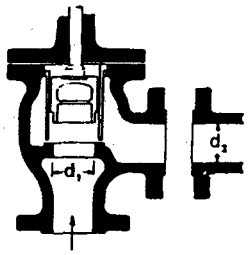

If:
$\beta = 1 \ldots K_1 = 200\, f_T$
$\beta < 1 \ldots K_2 =$ Formula 7

Minimum pipe velocity for full disc lift
$= 75\, \beta^2 \sqrt{\bar{V}}$

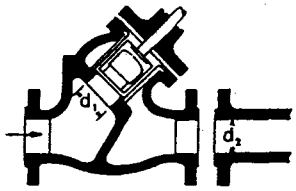

If:
$\beta = 1 \ldots K_1 = 300\, f_T$
$\beta < 1 \ldots K_2 =$ Formula 7

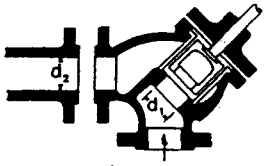

If:
$\beta = 1 \ldots K_1 = 350\, f_T$
$\beta < 1 \ldots K_2 =$ Formula 7

Minimum pipe velocity (fps) for full disc lift
$= 60\, \beta^2 \sqrt{\bar{V}}$

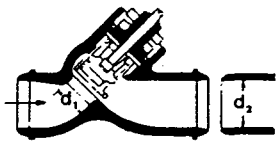

If:
$\beta = 1 \ldots K_1 = 55\, f_T$
$\beta < 1 \ldots K_2 =$ Formula 7

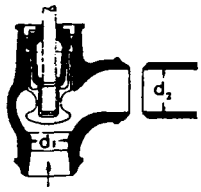

If:
$\beta = 1 \ldots K_1 = 55\, f_T$
$\beta < 1 \ldots K_2 =$ Formula 7

Minimum pipe velocity (fps) for full disc lift
$= 140\, \beta^2 \sqrt{\bar{V}}$

FOOT VALVES WITH STRAINER

Poppet Disc

$K = 420 f_T$

Minimum pipe velocity (fps) for full disc lift
$= 15 \sqrt{\bar{V}}$

Hinged Disc

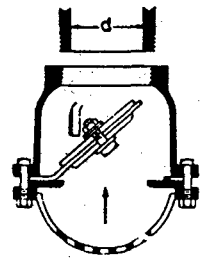

$K = 75 f_T$

Minimum pipe velocity (fps) for full disc lift
$= 35 \sqrt{\bar{V}}$

BALL VALVES

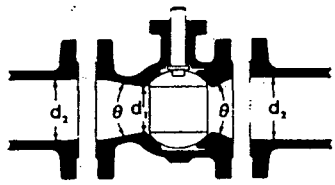

If: $\beta = 1,\ \theta = 0 \ldots\ldots\ldots\ldots K_1 = 3\, f_T$
$\beta < 1$ and $\theta \leq 45° \ldots\ldots\ldots K_2 =$ Formula 5
$\beta < 1$ and $45° < \theta \leq 180° \ldots K_2 =$ Formula 6

BUTTERFLY VALVES

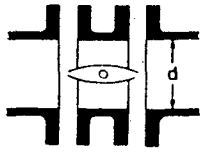

Sizes 2 to 8" . . . $K = 45\, f_T$
Sizes 10 to 14" . . . $K = 35\, f_T$
Sizes 16 to 24" . . . $K = 25\, f_T$

by: EG 6/20/02
JB 6/20/02

24/24

"K" FACTOR TABLE—SHEET 4 of 4

Representative Resistance Coefficients (K) for Valves and Fittings

(for formulas and friction data, see page A-26)

("K" is based on use of schedule pipe as listed on page 2-10)

PLUG VALVES AND COCKS

Straight-Way

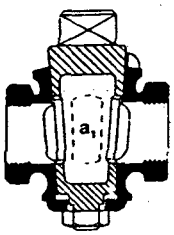

If: $\beta = 1$, $K_1 = 18\, f_T$

3-Way

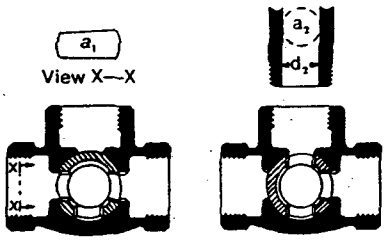

If: $\beta = 1$, $K_1 = 30\, f_T$

If: $\beta = 1$, $K_1 = 90\, f_T$

If: $\beta < 1 \ldots K_2 =$ Formula 6

MITRE BENDS

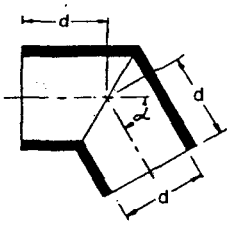

α	K
0°	2 f_T
15°	4 f_T
30°	8 f_T
45°	15 f_T
60°	25 f_T
75°	40 f_T
90°	60 f_T

90° PIPE BENDS AND FLANGED OR BUTT-WELDING 90° ELBOWS

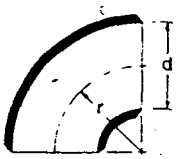

r/d	K	r/d	K
1	20 f_T	8	24 f_T
1.5	14 f_T	10	30 f_T
2	12 f_T	12	34 f_T
3	12 f_T	14	38 f_T
4	14 f_T	16	42 f_T
6	17 f_T	20	50 f_T

The resistance coefficient, K_B, for pipe bends other than 90° may be determined as follows:

$$K_B = (n - 1)\left(0.25\ \pi\ f_T \frac{r}{d} + 0.5\ K\right) + K$$

n = number of 90° bends
K = resistance coefficient for one 90° bend (per table)

CLOSE PATTERN RETURN BENDS

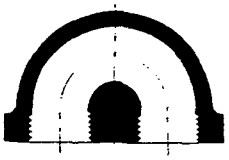

$K = 50\, f_T$

STANDARD ELBOWS

90°

$K = 30\, f_T$

45°

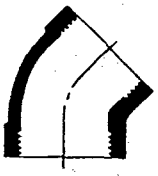

$K = 16\, f_T$

STANDARD TEES

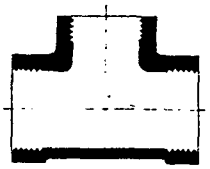

Flow thru run. . . . . $K = 20\, f_T$
Flow thru branch. . . . $K = 60\, f_T$

PIPE ENTRANCE

Inward Projecting

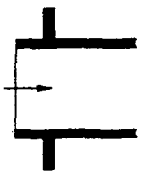

$K = 0.78$

r/d	K
0.00*	0.5
0.02	0.28
0.04	0.24
0.06	0.15
0.10	0.09
0.15 & up	0.04

*Sharp-edged

Flush

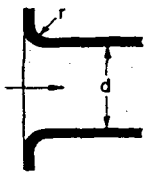

For K, see table

PIPE EXIT

Projecting

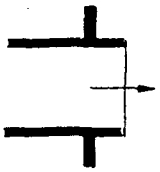

$K = 1.0$

Sharp-Edged

$K = 1.0$

Rounded

$K = 1.0$

Appendix E

Technical Data for Proposed Equipment

List of Technical Data
New Bedford Harbor Water Treatment Plant
New Bedford Harbor Superfund Site – OU #1

Clarifier Feed Pumps (P-101 A/B/C)

Filtration Feed Pumps (P-301 A/B/C)

Air Driven Diaphragm Pumps (DP-101/102/103/201/202)

Inclined Plate Clarifier System (CL-101)

Sand Filtration System (SF-301/302)

Polishing Filtration System (PF-401/402)

Liquid Phase GAC System (LC-501/502/503)

Chemical Feed Pumps (MP-201/202/203)

Sump Pumps (P-601 A/B)

Air Compressor System (AC-701)

Gas-Fired Heaters

CLARIFIER FEED PUMPS (P-101 A/B/C)

Corporate Office: One Floodgate Road, Bridgeport, NJ 08014 · voice 856-467-3636 · fax 856-467-4841

Electric Drive Dri-Prime® Pumps

Quick-Select Menu:
Products
Diesel Dri-Prime® Pumps
Electric Dri-Prime® Pumps
Sound Attenuated Dri-Prime® Pumps
Hydraulic Submersible Pumps
Electric Submersible Pumps
More Pumps
Rentals
Dri-Prime® Pumps
More Pumps
Pipe, Hose, Fittings
Bauer Pipe
HDPE, Fusion Machine
Generators, Light Towers, Compressors
Services
Locations
Applications
News
Career Opportunities
Request Information

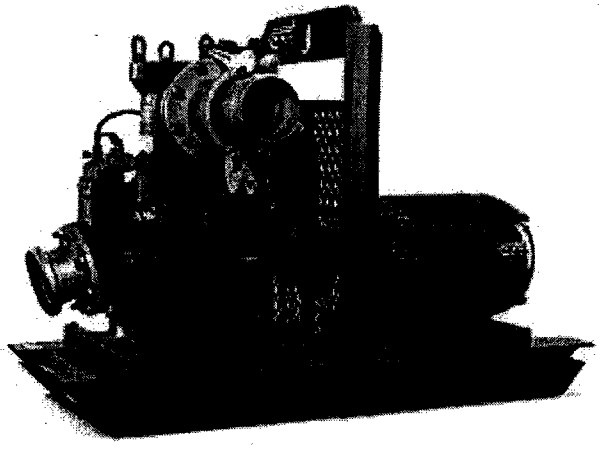

Dri-Prime automatic self-priming pumps offer reliable, low maintenance, continuous pumping in a Godwin electric drive pump. And permanently installed Dri-Prime's open a brand new market for self-priming pumps. Electric drive Dri-Prime pumps can be customized for your permanent installation using a wide range of speeds and impeller trims in the CD (solids-handling, low head) or HL (high head) ranges of the Dri-Prime pump series. The Godwin Pump is also built to higher specifications than the competition, resulting in long wearing, reliable duty - unmatched by any self-primer before. Reduce your operating and maintenance costs today using the energy-efficient Godwin Dri-Prime electric drive pump system.

Pump S

Download P in Adobe

Dri-Prime® is a registered trademark of Godwin Pumps of America, Inc.
© Copyright, 2001 Godwin Pumps of America, Inc. - All Rights Reserved.

Corporate Office: One Floodgate Road, Bridgeport, NJ 08014 · voice 856-467-3636 · fax 856-467-4841

CD150M Dri-Prime® Pump

Quick-Select Menu:
Products
Diesel Dri-Prime® Pumps
Electric Dri-Prime® Pumps
Sound Attenuated Dri-Prime® Pumps
Hydraulic Submersible Pumps
Electric Submersible Pumps
More Pumps
Rentals
Dri-Prime® Pumps
More Pumps
Pipe, Hose, Fittings
Bauer Pipe
HDPE, Fusion Machine
Generators, Light Towers, Compressors
Services
Locations
Applications
News
Career Opportunities
Request Information

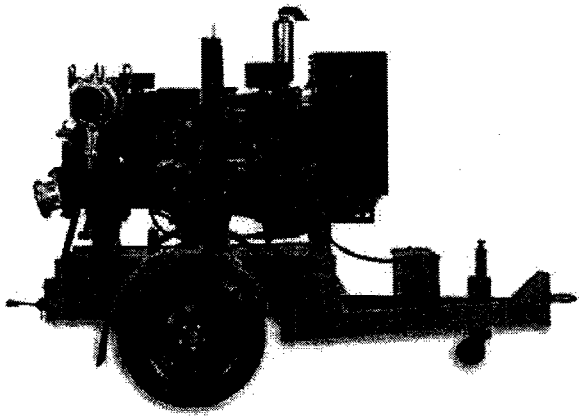

CD150M Performance Curve

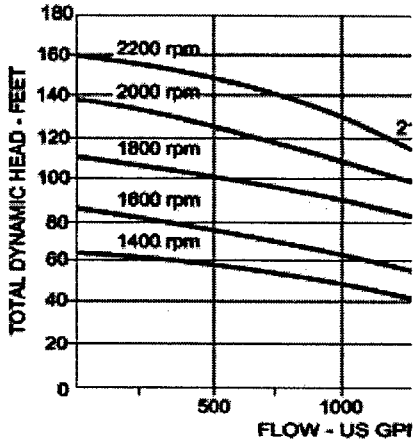

The Godwin Dri-Prime®6" CD150M automatic priming centrifugal pump is clearly the backbone of the temporary portable pumping industry. With solids-handling to 3" in diameter, maximum flows of 1700 gallons per minute and 160 feet of total dynamic head, and indefinite dry-running capabilities, the CD150M can be found in a wide variety of applications from straight dewatering to sewage bypassing. Mounted on a highway trailer, the CD150M is the most maneuverable and versatile portable pumping system available, making it a favorite of contractors, municipalities, industry and environmental companies across the country.

Pump Specificati

Download Pump Spec in Adobe Acrobat F

godwin pumps

Home Page

Dri-Prime® is a registered trademark of Godwin Pumps of America, Inc.
© Copyright, 2001 Godwin Pumps of America, Inc. - All Rights Reserved.

CD150M Dri-Prime® Pumps

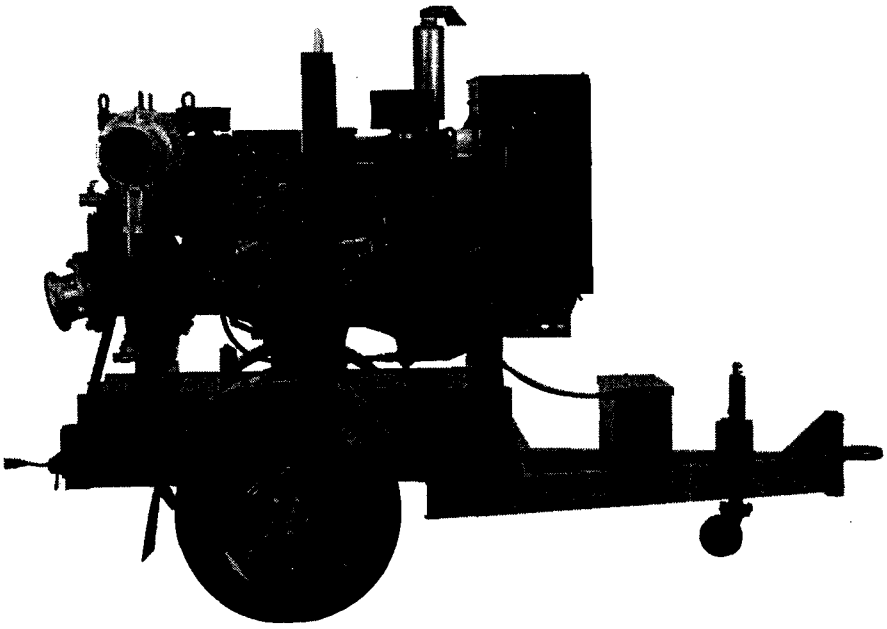

The Godwin Dri-Prime 6" CD150M automatic priming centrifugal pump is clearly the backbone of the temporary portable pumping industry. With solids-handling to 3" in diameter, maximum flows of 1700 gallons per minute and 160 feet of total dynamic head, and indefinite dry-running capabilities, the CD150M can be found in a wide variety of applications from straight dewatering to sewage bypassing. Mounted on a highway trailer, the CD150M is the most maneuverable and versatile portable pumping system available, making it a favorite of contractors, municipalities, industry and environmental companies across the country.

Features

- Close coupled centrifugal pump with vacuum priming compressor mounted to a diesel engine. Also available in electric drive or as bare shaft pumpend.
- All cast iron construction with cast chromium steel impeller.
- Extensive application flexibility — will handle raw sewage, slurries and liquids with solids up to 3" in diameter.
- Continuously operated "Godwin" patented air ejector priming device requiring no periodic adjustment or control.
- Dry running, oil bath, mechanical seal with abrasion resistant solid silicon carbide interfaces.
- Solids handling ball type Non Return Valve with renewable flexible rubber seat and quick release access feature.
- Compact unit mounted on skid base or two wheeled highway trailer both incorporating integral overnight running fuel tank.
- Simple maintenance — normally confined to checking engine and seal cavity oil levels.
- Standard John Deere 4045D or Caterpillar 3054NA engine. Also available with a variety of other engines including Hatz, Perkins and Deutz.
- Super-quiet critical silence pack version available for use in residential communities.

godwin pumps

CD150M Performance Curve

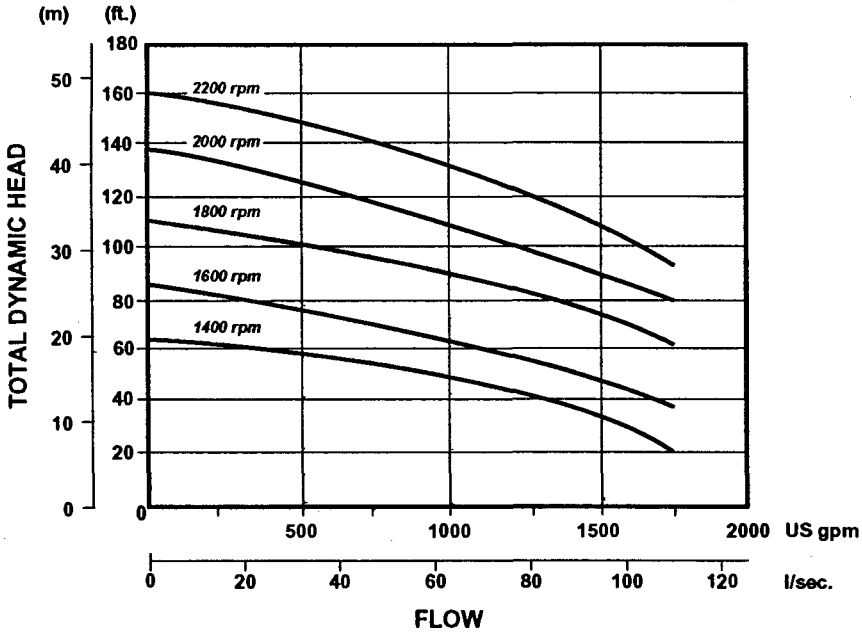

Performance Table

Diesel Set: John Deere 4045D, 71 hp @ 2200 rpm
Caterpillar 3054NA, 74 hp @ 2200 rpm
Impeller Diameter — 10.8"

	Total Delivery Head — Feet				
Total Suction	10	20	30	40	50
Head — Feet	Output — GPM				
10	1960	1900	1850	1800	1680
15	1850	1810	1700	1520	1400
20	1670	1590	1500	1380	1240
25	1500	1400	1340	1240	1100

Performance data listed in table and curves are based on water tests at sea level and 68° F (20° C). Larger diameter pipes may be required for maximum flows.

Dimensions

CD150M — shown with John Deere 4045D, GP60 Highway Trailer
Weight: 3200 lbs.

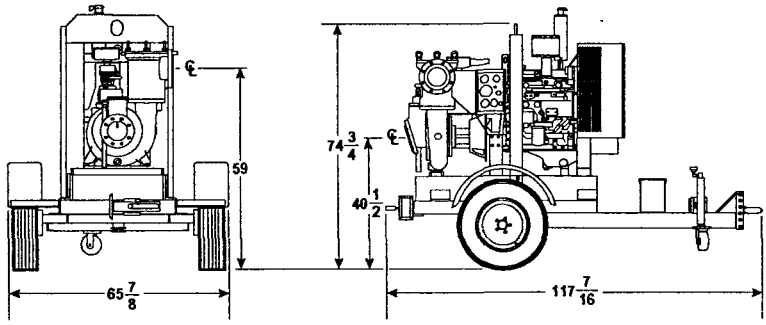

All dimensions listed in inches.

Specifications

Maximum Operating Speed:
2200 rpm
Maximum Operating Temperature:
+212° F (100° C)
Maximum Working Pressure:
58.5 psi
Maximum Suction Pressure:
40.0 psi
Maximum Casing Test Pressure:
88.0 psi
Fuel Tank Capacity:
60 to 100 gallons (60 gallon standard)
Fuel Consumption (full load):
John Deere 4045D: 3.82 gph @ 2200 rpm
Caterpillar 3054NA: 4.3 gph @ 2200 rpm
Pipe Connections:
6" ASA 150#
Solids Handling:
3" dia., standard impeller

Materials

Pump Casing, Suction Cover, Separation Tank and Wearplates:
Close grained cast iron
Impeller:
Cast chromium steel hardened to minimum Brinell 341 HB
Shaft:
1-1/2% nickel/chromium steel
Non Return Valve Body, Ejector Housing:
Close-grained cast iron
Non Return Valve – Ball and Seat:
High nitrile rubber
Mechanical Seal Faces:
Solid silicon carbide

godwin pumps

One Floodgate Road, Bridgeport, NJ 08014
Tel: (856) 467-3636 • Fax: (856) 467-4841
E-mail: sales@godwinpumps.com
www.godwinpumps.com

BRANCH LOCATIONS:
Norwich, CT • Buffalo, NY • Chicago, IL
Washington, DC • Richmond, VA • Virginia Beach, VA • Charleston, WV • N. Charleston, SC
Atlanta, GA • Houston, TX • Raleigh, NC

Dri-Prime® is a registered trademark of Godwin Pumps of America, Inc.
Specifications and illustrations are subject to revision without notice.
© Copyright 2001. Godwin Pumps of America, Inc. All rights reserved.

godwin pumps

PUMP TYPE CD150M	
CURVE No. CD150M-11A	DATE 22.12.90.
BRANCH SIZES 6" x 6"	SPEED RPM VARIABLE

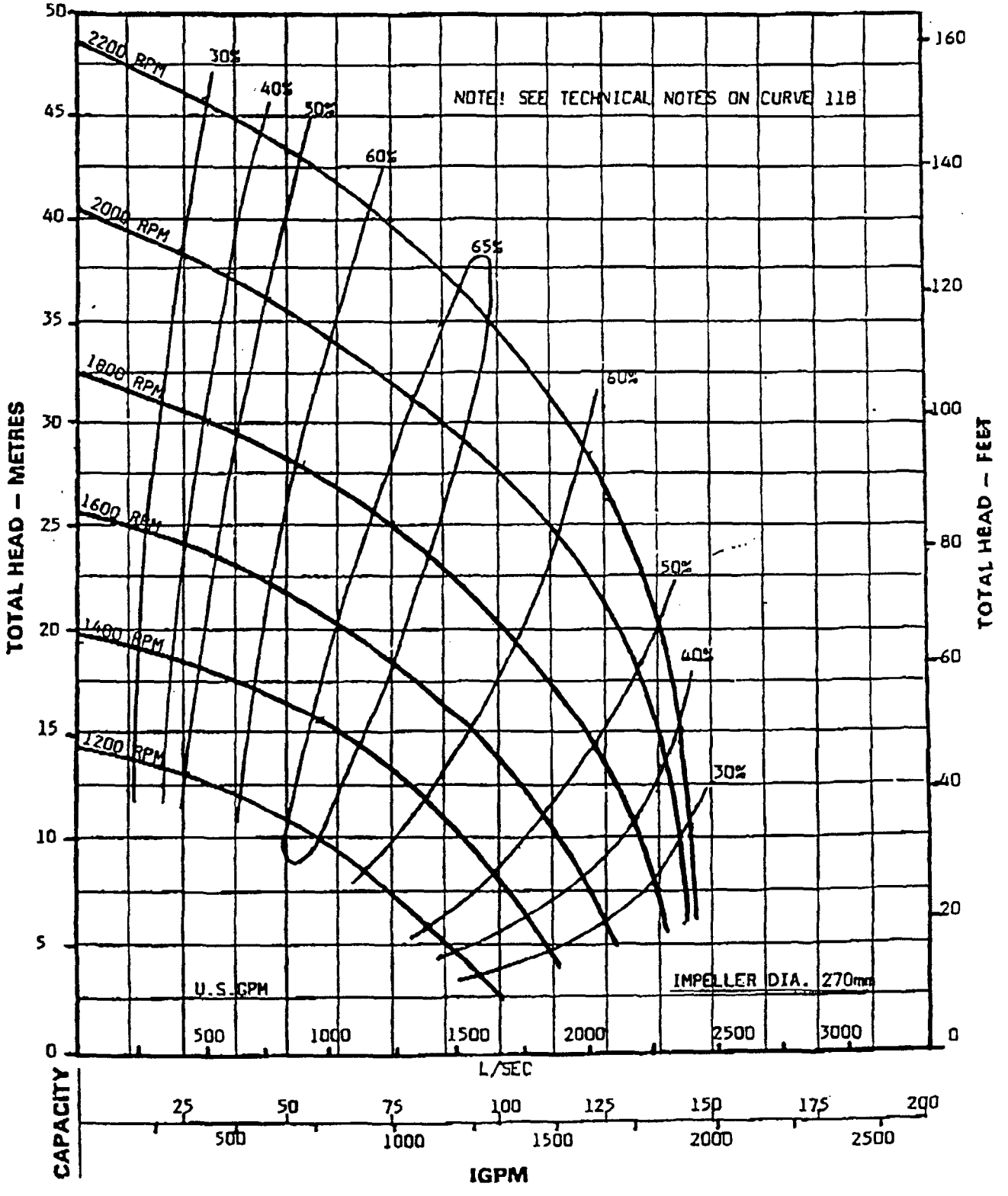

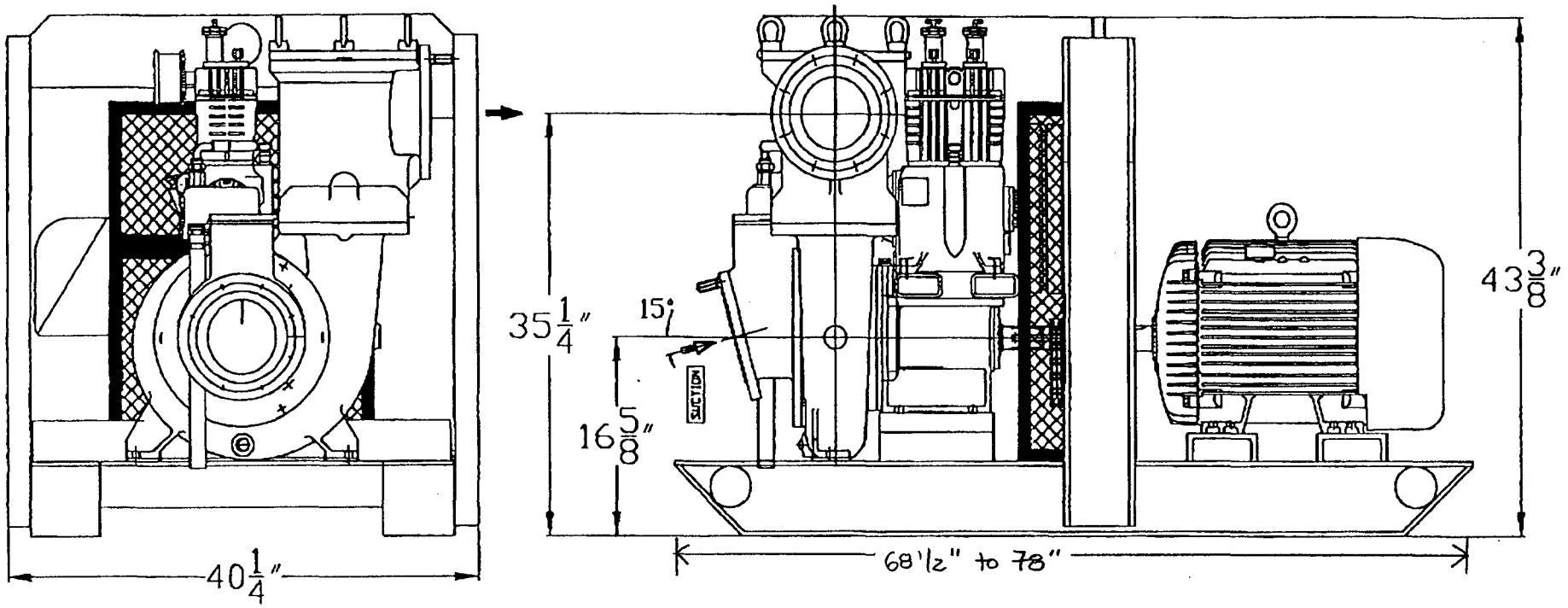

Notes:

1. Dimensions are in inches.
2. Do not scale drawing.
3. Drawing is not for construction.
   Consult factory for certified dimensions.
4. Suction and discharge flanges are 6" - 150#.

godwin pumps of America, Inc.
RENTAL * SALES * SERVICE
One Floodgate Road * Bridgeport, NJ 08014
Tel: (609) 467-3636 * (609) 467-4841

DATE	TITLE	SIZE
6/13/97	CD150M DIRECT DRIVE 50 HP ELECTRIC	A

©copyright 1997, Godwin Pumps of America

godwin pumps of America, Inc.
31 Clinton Avenue
Norwich, CT 06360
Telephone: (860) 889-2343
Facsimile: (860) 889-0673
www.godwinpumps.com

July 24, 2001

Foster Wheeler Environmental
133 Federal Street
6th Floor
Boston, MA 02110

Attention: Mr. Alex Lillio

Phone: (617)457-8200
Fax: (617)457-8498

RE: New Bedford Harbor Project
New Bedford, MA
Sale Quote CJH1627

Dear Mr. Lillio:

I apologize for the delay of getting these pump quotation to you. The VFD manufacture was very busy with quotation last week and held me up.

Enclosed are four different quotation for VFD driven electric Dri-Prime® pumps, based on the information you provided. All VFD pump motors are T.E.F.C. rated for outside operation. The pumps are skid mounted with a power cord connection from the motor to the NEMA 3R VFD panel. The stainless steel pumps are 3/16 stainless body, impeller, wear plates, shaft and hardwear. The cast iron pumps are close grain cast iron body wear plates 1 ½% chromium shaft and Brinnell 341 impeller. Both pumpends incorporate an adjustable double mechanical seal with solid silicon carbide faces immersed in an oil bath to allow the seal to run dry indefinitely without damage to the mechanical seal faces.

The design of these pumps whether stainless steel or cast iron will handle long term operation. If you are pumping brackish or salt water we would recommend stainless steel pumps for longer life operation. This pricing is good for 90 days from quotation.

If after reviewing this proposal you should have any questions, please contact me at (860) 889-2343.

Sincerely,

GODWIN PUMPS OF AMERICA, INC.

Carroll Hunnewell
Senior Sales Engineer

CJH/mr

**** SALE QUOTATION ****

Suction Lift 15' - 20'
8" Suction Hose
1000 GPM @ 40' TDH
2 Pumps Required
Estimated Flow per Pump 1000 GPM
Discharge Distance Unknown
Both Pumps Require 75 Amps @ 460 Volt, 3 Phase to Run

ITEM	QTY	DESCRIPTION	UNIT SALE PRICE	TOTAL SALE PRICE
A	2	Godwin Dri-Prime® Model CD150M Automatic Self-Priming Electric (to 28 feet) Stainless Steel Pumpset. • 6" flange suction and discharge connection. • Solids handling to 3". • Dry Running Oil Bath Mechanical Seal. • Driven by 60 HP, 460 Volt, 3 phase, with VFD Drive, NEMA 3R Enclosure • Skid mounted with central lifting bracket. • Circuit Breaker, Keypad Start/Stop and Runlight	$ 29,281.00	$58,562.00
B	2	Godwin Dri-Prime® Model CD150M Automatic Self-Priming Electric (to 28 feet) Pumpset. • 6" flange suction and discharge connection. • Solids handling to 3". • Dry Running Oil Bath Mechanical Seal. • Driven by 60 HP, 460 Volt, 3 phase, with VFD Drive, NEMA 3R Enclosure • Skid mounted with central lifting bracket. • Circuit Breaker, Keypad Start/Stop and Runlight	$ 16,465.00	$32,930.00

A.R.O. - 4 - 6 Weeks
Delivery: No Charge with Order.

**** SALE QUOTATION ****

Suction Lift 15' - 20'
4" Suction Hose
1000 GPM @ 40' TDH
3 Pumps Required
Estimated Flow per Pump 350 GPM
Discharge Distance Unknown
Both Pumps Require 25 Amps @ 460 Volt, 3 Phase to Run

ITEM	QTY	DESCRIPTION	UNIT SALE PRICE	TOTAL SALE PRICE
A	3	Godwin Dri-Prime® Model CD100M Automatic Self-Priming (to 28 feet) Electric Stainless Steel Pumpset. • 4" Flange suction and discharge connection. • Solids handling to 1-7/8". • Dry Running Oil Bath Mechanical Seal. • Driven by 20 HP, 230-460 Volt, 3 phase, VFD Drive, NEMA 3R Enclosure. • Skid mounted with central lifting bracket. • Circuit Breaker, Keypad Start/Stop, and Run Light.	$23,775.00	$71,325.00
B	3	Godwin Dri-Prime® Model CD100M Automatic Self-Priming (to 28 feet) Electric Pumpset. • 4" Flange suction and discharge connection. • Solids handling to 1-7/8". • Dry Running Oil Bath Mechanical Seal. • Driven by 20 HP, 230-460 Volt, 3 phase, VFD Drive, NEMA 3R Enclosure. • Skid mounted with central lifting bracket. • Circuit Breaker, Keypad Start/Stop, and Run Light.	$ 15,592.00	$46,776.00

A.R.O. - 4 - 6 Weeks
Delivery: No Charge with Order.

**** SALE QUOTATION ****

Suction Lift 15' - 20'
8" Suction Hose
2000 GPM @ 140' TDH
2 Pumps Required
Estimated Flow per Pump 1000 GPM
Discharge Distance Unknown
Both Pumps Require 225 Amps @ 460 Volt, 3 Phase to Run

ITEM	QTY	DESCRIPTION	UNIT SALE PRICE	TOTAL SALE PRICE
A	2	Godwin Dri-Prime® Model HL5M Automatic Self-Priming (to 28 feet) Electric Stainless Steel Pumpset. • 6" Flange suction and discharge connection. • Solids handling to 1-3/8". • Dry Running Oil Bath Mechanical Seal. • Driven by 150 HP, 460 Volt, 3 phase VFD Drive NEMA 3R Enclosure. • Skid mounted with central lifting bracket. • Circuit Breaker, Keypad Start/Stop and Run Light	$ 45,202.00	$90,404.00
B	2	Godwin Dri-Prime® Model HL5M Automatic Self-Priming (to 28 feet) Electric Pumpset. • 6" Flange suction and discharge connection. • Solids handling to 1-3/8". • Dry Running Oil Bath Mechanical Seal. • Driven by 150 HP, 460 Volt, 3 phase VFD Drive NEMA 3R Enclosure. • Skid mounted with central lifting bracket. • Circuit Breaker, Keypad Start/Stop and Run Light	$ 28,062.00	$56,124.00

A.R.O. - 4 - 6 Weeks
Delivery: No Charge with Order.

**** SALE QUOTATION ****

Suction Lift 15' - 20'
4" Suction Hose
1000 GPM @ 140' TDH
3 Pumps Required
Estimated Flow per Pump 350 GPM
Discharge Distance Unknown
Both Pumps Require 75 Amps @ 460 Volt, 3 Phase to Run

ITEM	QTY	DESCRIPTION	UNIT SALE PRICE	TOTAL SALE PRICE
A	3	Godwin Dri-Prime® Model HL80M Automatic Self-Priming (to 28 feet) Stainless Steel Pumpset. • 4" flange suction and discharge connection. • Solids handling to 1". • Dry Running Oil Bath Mechanical Seal. • Driven by 60 HP, 460 Volt, 3 phase, VFD Drive NEMA 3R Enclosure. • Skid mounted with central lifting bracket • Circuit Breaker, Keypad, Start/Stop and Run Light	$33,025.00	$99,075.00
B	3	Godwin Dri-Prime® Model HL80M Automatic Self-Priming (to 28 feet) Pumpset. • 4" flange suction and discharge connection. • Solids handling to 1". • Dry Running Oil Bath Mechanical Seal. • Driven by 60 HP, 460 Volt, 3 phase, VFD Drive NEMA 3R Enclosure. • Skid mounted with central lifting bracket • Circuit Breaker, Keypad, Start/Stop and Run Light	$16,550.00	$49,650.00

A.R.O. - 4 - 6 Weeks
Delivery: No Charge with Order.

FILTRATION FEED PUMPS (P-301 A/B/C)

Corporate Office: One Floodgate Road, Bridgeport, NJ 08014 · voice 856-467-3636 · fax 856-467-4841

HL5M Dri-Prime® Pump

Quick-Select Menu:
Products
Diesel Dri-Prime® Pumps
Electric Dri-Prime® Pumps
Sound Attenuated Dri-Prime® Pumps
Hydraulic Submersible Pumps
Electric Submersible Pumps
More Pumps
Rentals
Dri-Prime® Pumps
More Pumps
Pipe, Hose, Fittings
Bauer Pipe
HDPE, Fusion Machine
Generators, Light Towers, Compressors
Services
Locations
Applications
News
Career Opportunities
Request Information

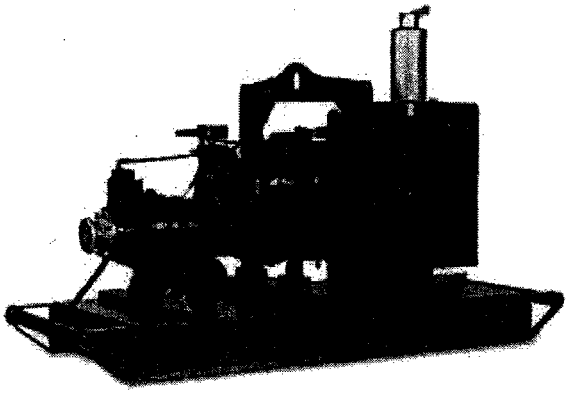

HL5M Performance Curve

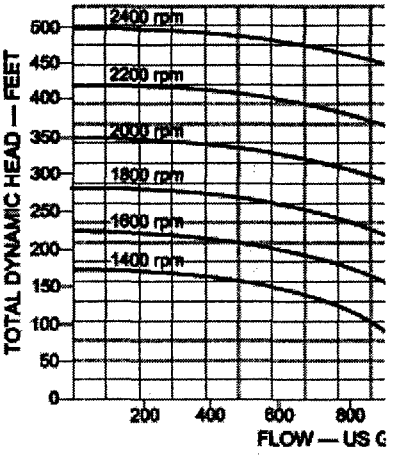

The HL5M automatic Godwin Dri-Prime 6" x 6" centrifugal pump is an extremely powerful yet compact high pressure pump with flow capabilities to 1450 gallons per minute and discharge heads to 500 feet. In addition, the HL5M features the unique Godwin high pressure oil bath mechanical seal design that allows for totally dry running for indefinite periods of time while automatically priming and repriming. Able to perform in the toughest conditions, the HL5M can pass a solid to 1-3/8" in diameter, making it a high pressure trash pump as well as a superior dewatering pump. The powerful HL5M has already proven itself a pump of choice for mines, quarries, temporary fire pump systems and many other high pressure applications.

Pump Specificati

Download Pump Spec
in Adobe Acrobat F

godwir
pump:

Home Pag

Dri-Prime® is a registered trademark of Godwin Pumps of America, Inc.
© Copyright, 2001 Godwin Pumps of America, Inc. - All Rights Reserved.

HL5M Dri-Prime® Pumps

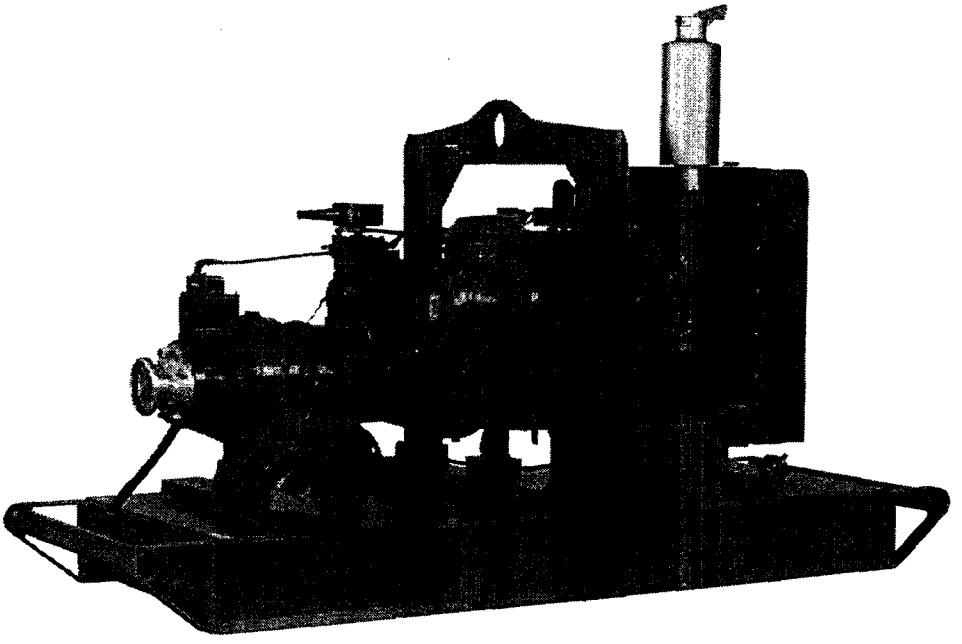

The HL5M automatic Godwin Dri-Prime® 6" x 6" centrifugal pump is an extremely powerful yet compact high pressure pump with flow capabilities to 1450 gallons per minute and discharge heads to 500 feet. In addition, the HL5M features the unique Godwin high pressure oil bath mechanical seal design that allows for totally dry running for indefinite periods of time while automatically priming and repriming. Able to perform in the toughest conditions, the HL5M can pass a solid to 1-3/8" in diameter, making it a high pressure trash pump as well as a superior dewatering pump. The powerful HL5M has already proven itself a pump of choice for mines, quarries, temporary fire pump systems and many other high pressure applications.

Features

- Close coupled automatic priming 6" x 6" centrifugal pump mounted to a diesel engine. Also available in electric drive or as bare shaft pumpend.
- All cast iron construction with cast chromium steel impeller.
- Extensive application flexibility — will handle liquids with solids up to 1-3/8" in diameter.
- Continuously operated "Godwin" venturi air ejector priming device featuring belt-driven air compressor requiring no form of periodic adjustment or control.
- Dry running, high pressure, oil bath mechanical seal with abrasion resistant solid silicon carbide interfaces.
- Solids handling swing type Non Return Valve with renewable flexible rubber seat.
- Compact unit mounted on a skid base or two wheeled highway trailer, both incorporating integral overnight running fuel tank.
- Simple maintenance — normally limited to checking engine and seal cavity oil levels.
- Standard engine, Caterpillar 3126TA. Available with a variety of engines including John Deere, Cummins and Deutz.
- Low profile side discharge for easy pipe connection.

godwin pumps

HL5M Performance Curve

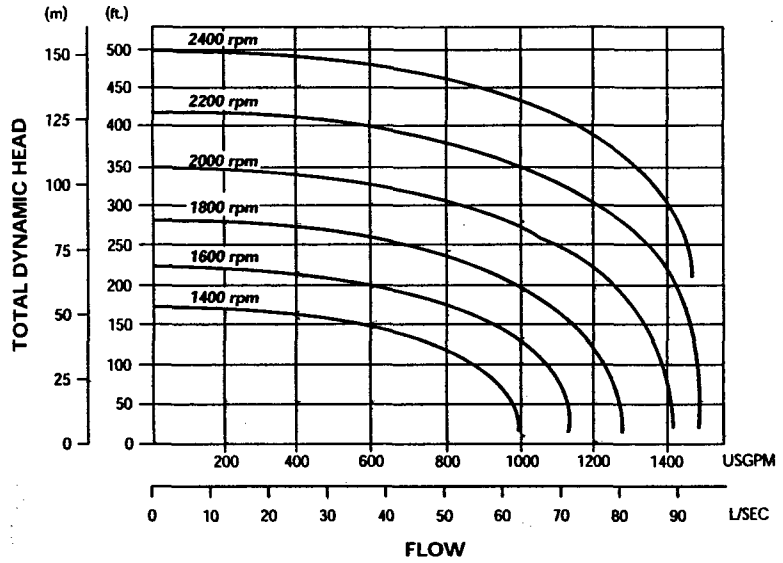

Performance Table

HL5M Diesel Set — Caterpillar 3126TA, 220 hp @ 2400 rpm
Impeller Diameter — 15-1/8" (385 mm)

	Total Delivery Head — Feet				
Total Suction	180	220	260	280	300
Head — Feet	Output — GPM				
10	1500	1480	1465	1425	1410
15	1475	1460	1430	1400	1375
20	1380	1270	1200	1160	1115
25	1290	1095	975	920	855

Performance data listed in table and curves based on water tests at sea level and 68° F (20° C). Larger diameter pipes may be required for maximum flows.

Dimensions

HL5M — Caterpillar 3126TA, Skid Base
Weight: 7200 lbs.

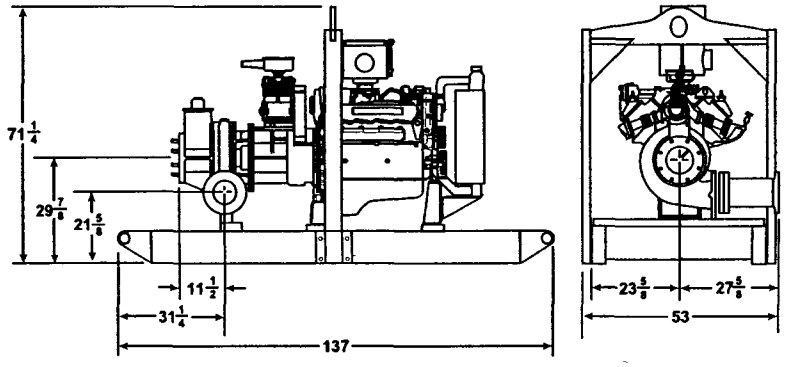

All dimensions listed in inches.

Specifications

Maximum Operating Speed:
2400 rpm
Maximum Operating Temperature:
+212° F (100° C)
Maximum Working Pressure:
216 psi
Maximum Suction Pressure:
100 psi
Maximum Casing Pressure:
325 psi
Fuel Tank Capacity:
175 gal.
Fuel Consumption:
11.7 gph @ 2400 rpm (full load & max. speed)
Pipe Connections:
Suction: 6" 150# flange
Discharge: 6" 150# flange
Solids Handling:
1-3/8" diameter

Materials

Pump Casing, Suction Cover, and Wearplates:
Close Grained Cast Iron (optional 26% chrome iron available)
Impeller:
Cast Chromium Steel hardened to minimum Brinell 341 HB
Shaft:
1-1/2% Nickel/Chromium steel
Non Return Valve Body, Ejector Housing:
Close Grained Cast Iron
Non Return Valve Flapper:
High nitrile rubber
Mechanical Seal Faces:
Solid silicon carbide

godwin pumps

One Floodgate Road, Bridgeport, NJ 08014
Tel: (856) 467-3636 • Fax: (856) 467-4841
E-mail: sales@godwinpumps.com
www.godwinpumps.com

BRANCH LOCATIONS:
Norwich, CT • Buffalo, NY • Chicago, IL
Washington, DC • Richmond, VA • Virginia Beach, VA • Charleston, WV • N. Charleston, SC
Atlanta, GA • Houston, TX • Raleigh, NC

Dri-Prime® is a registered trademark of Godwin Pumps of America, Inc.
Specifications and illustrations are subject to revision without notice.
© Copyright 2001 Godwin Pumps of America, Inc. All rights reserved.

GPASL.024.601

godwin pumps

PUMP TYPE HL5M	
CURVE No. HL5M-4A	DATE 15.02.96
BRANCH SIZES 6" X 6"	SPEED RPM VARIABLE

PAGE 1

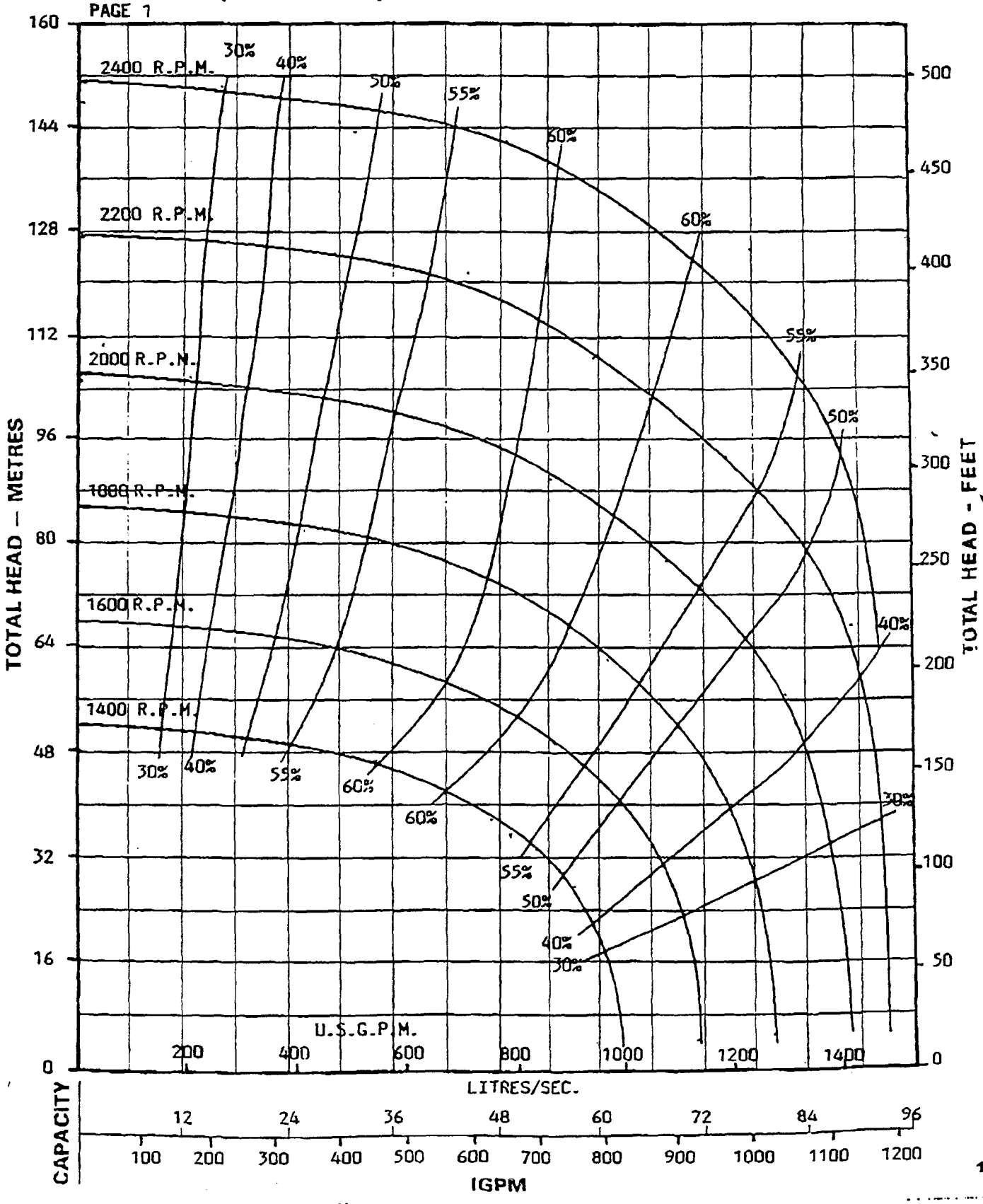

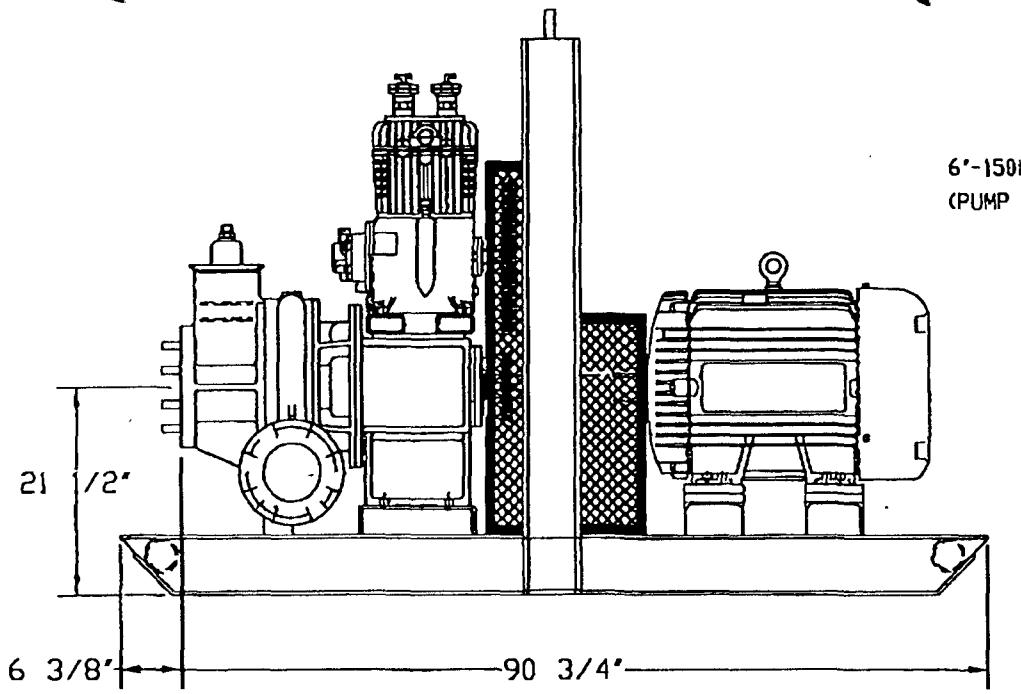

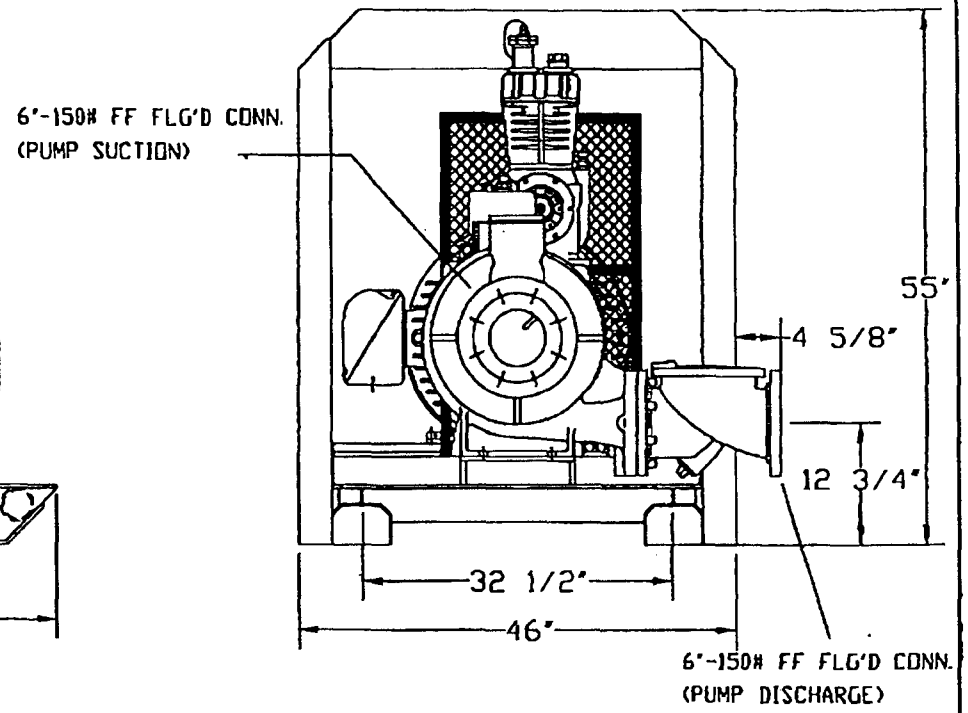

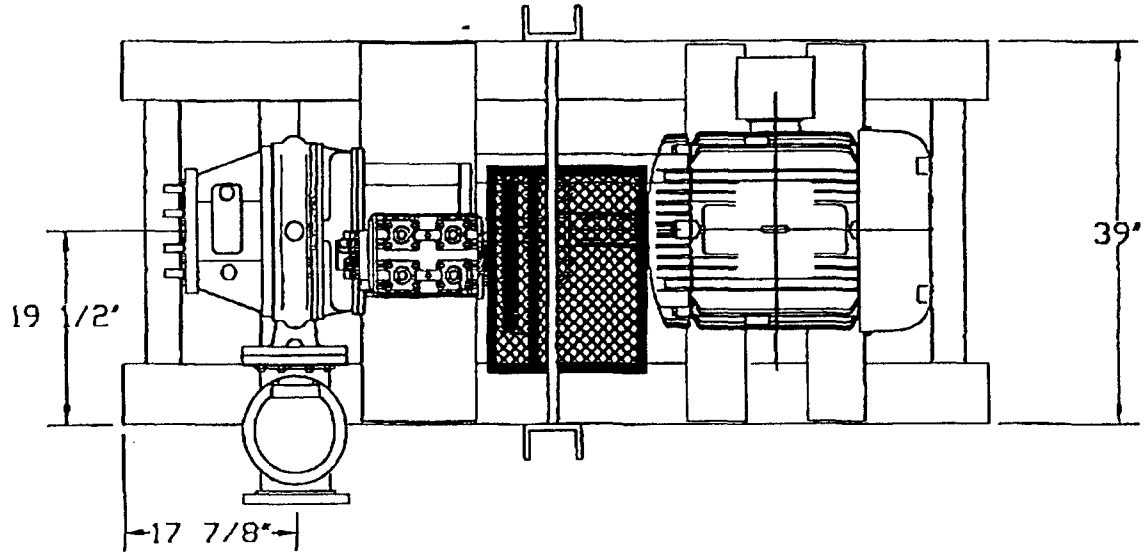

NOTES:
1. DIMENSIONS ARE IN INCHES.
2. DO NOT SCALE DRAWING.
3. SUCTION AND DISCHARGE FLANGES ARE 6" ASA 150.
4. APPROXIMATE WEIGHT = 2,700lbs.

godwin pumps of America, Inc.

RENTAL * SALES * SERVICE
One Floodgate Road * Bridgeport, NJ 08014
Tel: (609) 467-3636 * (609) 467-4841

DATE	MODEL HL5M 6"x6"	SIZE
4/30/98	100 HP ELECTRIC DRIVE PUMPSET	A

©copyright 1998, Godwin Pumps of America

godwin pumps of America, Inc.
31 Clinton Avenue
Norwich, CT 06360
Telephone: (860) 889-2343
Facsimile: (860) 889-0673
www.godwinpumps.com

July 24, 2001

Foster Wheeler Environmental
133 Federal Street
6th Floor
Boston, MA 02110

Attention: Mr. Alex Lillio

Phone: (617)457-8200
Fax: (617)457-8498

RE: New Bedford Harbor Project
New Bedford, MA
Sale Quote CJH1627

Dear Mr. Lillio:

I apologize for the delay of getting these pump quotation to you. The VFD manufacture was very busy with quotation last week and held me up.

Enclosed are four different quotation for VFD driven electric Dri-Prime® pumps, based on the information you provided. All VFD pump motors are T.E.F.C. rated for outside operation. The pumps are skid mounted with a power cord connection from the motor to the NEMA 3R VFD panel. The stainless steel pumps are 3/16 stainless body, impeller, wear plates, shaft and hardwear. The cast iron pumps are close grain cast iron body wear plates 1 ½% chromium shaft and Brinnell 341 impeller. Both pumpends incorporate an adjustable double mechanical seal with solid silicon carbide faces immersed in an oil bath to allow the seal to run dry indefinitely without damage to the mechanical seal faces.

The design of these pumps whether stainless steel or cast iron will handle long term operation. If you are pumping brackish or salt water we would recommend stainless steel pumps for longer life operation. This pricing is good for 90 days from quotation.

If after reviewing this proposal you should have any questions, please contact me at (860) 889-2343.

Sincerely,

GODWIN PUMPS OF AMERICA, INC.

Carroll Hunnewell
Senior Sales Engineer

CJH/mr

**** SALE QUOTATION ****

Suction Lift 15' - 20'
8" Suction Hose
1000 GPM @ 40' TDH
2 Pumps Required
Estimated Flow per Pump 1000 GPM
Discharge Distance Unknown
Both Pumps Require 75 Amps @ 460 Volt, 3 Phase to Run

ITEM	QTY	DESCRIPTION	UNIT SALE PRICE	TOTAL SALE PRICE
A	2	Godwin Dri-Prime® Model CD150M Automatic Self-Priming Electric (to 28 feet) Stainless Steel Pumpset. • 6" flange suction and discharge connection. • Solids handling to 3". • Dry Running Oil Bath Mechanical Seal. • Driven by 60 HP, 460 Volt, 3 phase, with VFD Drive, NEMA 3R Enclosure • Skid mounted with central lifting bracket. • Circuit Breaker, Keypad Start/Stop and Runlight	$ 29,281.00	$58,562.00
B	2	Godwin Dri-Prime® Model CD150M Automatic Self-Priming Electric (to 28 feet) Pumpset. • 6" flange suction and discharge connection. • Solids handling to 3". • Dry Running Oil Bath Mechanical Seal. • Driven by 60 HP, 460 Volt, 3 phase, with VFD Drive, NEMA 3R Enclosure • Skid mounted with central lifting bracket. • Circuit Breaker, Keypad Start/Stop and Runlight	$ 16,465.00	$32,930.00

A.R.O. - 4 - 6 Weeks
Delivery: No Charge with Order.

**** SALE QUOTATION ****

Suction Lift 15' - 20'
4" Suction Hose
1000 GPM @ 40' TDH
3 Pumps Required
Estimated Flow per Pump 350 GPM
Discharge Distance Unknown
Both Pumps Require 25 Amps @ 460 Volt, 3 Phase to Run

ITEM	QTY	DESCRIPTION	UNIT SALE PRICE	TOTAL SALE PRICE
A	3	Godwin Dri-Prime® Model CD100M Automatic Self-Priming (to 28 feet) Electric Stainless Steel Pumpset. • 4" Flange suction and discharge connection. • Solids handling to 1-7/8". • Dry Running Oil Bath Mechanical Seal. • Driven by 20 HP, 230-460 Volt, 3 phase, VFD Drive, NEMA 3R Enclosure. • Skid mounted with central lifting bracket. • Circuit Breaker, Keypad Start/Stop, and Run Light.	$23,775.00	$71,325.00
B	3	Godwin Dri-Prime® Model CD100M Automatic Self-Priming (to 28 feet) Electric Pumpset. • 4" Flange suction and discharge connection. • Solids handling to 1-7/8". • Dry Running Oil Bath Mechanical Seal. • Driven by 20 HP, 230-460 Volt, 3 phase, VFD Drive, NEMA 3R Enclosure. • Skid mounted with central lifting bracket. • Circuit Breaker, Keypad Start/Stop, and Run Light.	$ 15,592.00	$46,776.00

A.R.O. - 4 - 6 Weeks
Delivery: No Charge with Order.

**** SALE QUOTATION ****

Suction Lift 15' - 20'
8" Suction Hose
2000 GPM @ 140' TDH
2 Pumps Required
Estimated Flow per Pump 1000 GPM
Discharge Distance Unknown
Both Pumps Require 225 Amps @ 460 Volt, 3 Phase to Run

ITEM	QTY	DESCRIPTION	UNIT SALE PRICE	TOTAL SALE PRICE
A	2	Godwin Dri-Prime® Model HL5M Automatic Self-Priming (to 28 feet) Electric Stainless Steel Pumpset. • 6" Flange suction and discharge connection. • Solids handling to 1-3/8". • Dry Running Oil Bath Mechanical Seal. • Driven by 150 HP, 460 Volt, 3 phase VFD Drive NEMA 3R Enclosure. • Skid mounted with central lifting bracket. • Circuit Breaker, Keypad Start/Stop and Run Light	$ 45,202.00	$90,404.00
B	2	Godwin Dri-Prime® Model HL5M Automatic Self-Priming (to 28 feet) Electric Pumpset. • 6" Flange suction and discharge connection. • Solids handling to 1-3/8". • Dry Running Oil Bath Mechanical Seal. • Driven by 150 HP, 460 Volt, 3 phase VFD Drive NEMA 3R Enclosure. • Skid mounted with central lifting bracket. • Circuit Breaker, Keypad Start/Stop and Run Light	$ 28,062.00	$56,124.00

A.R.O. - 4 - 6 Weeks
Delivery: No Charge with Order.

**** SALE QUOTATION ****

Suction Lift 15' - 20'
4" Suction Hose
1000 GPM @ 140' TDH
3 Pumps Required
Estimated Flow per Pump 350 GPM
Discharge Distance Unknown
Both Pumps Require 75 Amps @ 460 Volt, 3 Phase to Run

ITEM	QTY	DESCRIPTION	UNIT SALE PRICE	TOTAL SALE PRICE
A	3	Godwin Dri-Prime® Model HL80M Automatic Self-Priming (to 28 feet) Stainless Steel Pumpset. • 4" flange suction and discharge connection. • Solids handling to 1". • Dry Running Oil Bath Mechanical Seal. • Driven by 60 HP, 460 Volt, 3 phase, VFD Drive NEMA 3R Enclosure. • Skid mounted with central lifting bracket • Circuit Breaker, Keypad, Start/Stop and Run Light	$33,025.00	$99,075.00
B	3	Godwin Dri-Prime® Model HL80M Automatic Self-Priming (to 28 feet) Pumpset. • 4" flange suction and discharge connection. • Solids handling to 1". • Dry Running Oil Bath Mechanical Seal. • Driven by 60 HP, 460 Volt, 3 phase, VFD Drive NEMA 3R Enclosure. • Skid mounted with central lifting bracket • Circuit Breaker, Keypad, Start/Stop and Run Light	$16,550.00	$49,650.00

A.R.O. - 4 - 6 Weeks
Delivery: No Charge with Order.

AIR DRIVEN DIAPHRAGM PUMPS (DP-101, DP-102, DP-103, DP-201 & DP-202)

Catalog : Plastic Pumps : T8 - 2" (50.8 mm) Plastic Pump : Specifications

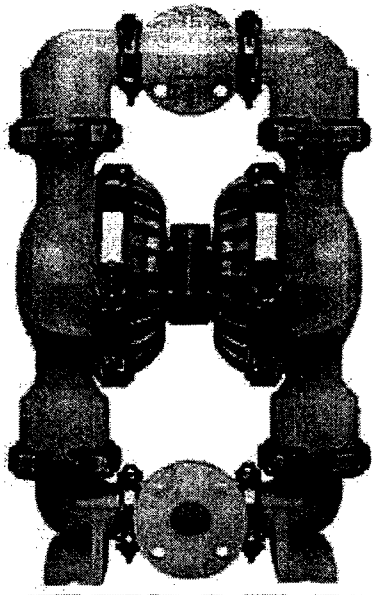

TURBO-FLO PROGRESSIVE PUMP TECHNOLOGY

Click to Purchase

Flow Curves Drawings Pump User's Guide

Wilden T8 - 2" (50.8 mm) Plastic Pump

FLOW RATE TO 590.5 LPM (156 GPM)
MAX PRESSURE = 8.6 BAR (125 PSI)

WETTED HOUSINGS
(Water Chambers and Manifolds)

Material	Ship Wt
Polyproylene	35.4 kg (77.0 lbs)
PVDF	44.6 kg (97.0 lbs)

NON-WETTED HOUSINGS

Description	Material
Center Block	Polypropylene, Aluminum, Nickel-plated Aluminum, or Stainless Steel
Air Valve	Brass, Teflon®-coated Brass, Nickel-plated Brass, or Stainless Steel

MAXIMUM SUCTION LIFT CAPABILITY
5.8 m (19')

MAXIMUM DIAMETER SOLIDS
6.35 mm (1/4")

ELASTOMER OPTIONS

Material	Temperature Limits
Buna-N®	-12.2 (+10) to +65.6 (+150) °C (F°)
Neoprene	-17.8 (+0) to +93.3 (+200) °C (F°)
Nordel®	-51.1 (-60) to +137.8 (+280) °C (F°)
Polyurethane	-12.2 (+10) to +65.6 (+150) °C (F°)
Saniflex™	-28.9 (+20) to +104.4 (+220) °C (F°)
Teflon® PTFE	+4.4 (+40) to +104.4 (+220) °C (F°)
Viton®	-40 (-40) to +176.7 (+350) °C (F°)
Wil-Flex™	-40 (-40) to +107.2 (+225) °C (F°)

DXF DRAWINGS (CAD REQUIRED)

T8 Turbo-Flo™ Plastic 279 k

ENGINEERING OPERATION & MAINTENANCE MANUAL

T8/A8 Plastic 766 k

BLACK & WHITE FLYERS (PDF FILE)

T8 Plastic Pump 117 k

GENERAL SPECIFICATIONS (PDF FILE)

Catalog : Plastic Pumps : T8 - 2" (50.8 mm) Plastic Pump : Dimensional Drawings

Dimensions for T8 - 2" (50.8 mm) Plastic Pump

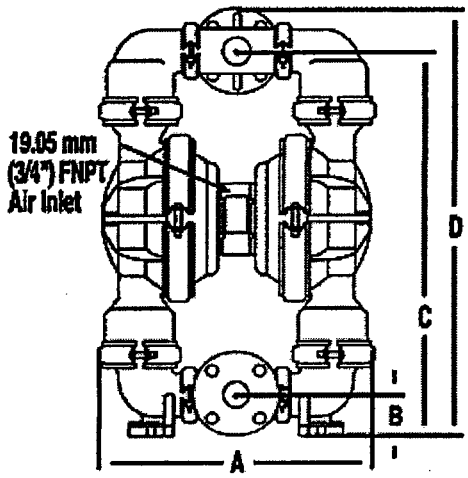

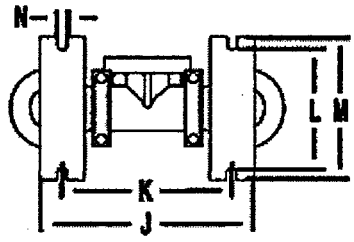

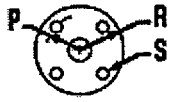

Flange
150 pound class
50.8 mm (2") I.D.

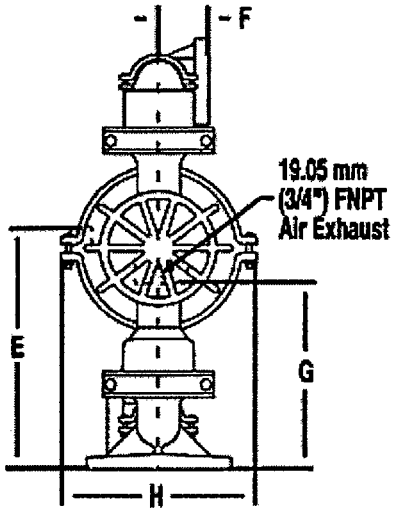

DIMENSIONS - T8 PLASTIC

ITEM	METRIC (mm)	STANDARD (inch)
A	491.3	19 11/32
B	77.0	3 1/32
C	693.0	27 9/32
D	770.0	30 5/16
E	446.1	7 9/16
F	88.9	3 1/2
G	344.5	13 9/16
H	332.6	13 3/32
J	386.6	15 7/32
K	306.4	12 1/16
L	228.6	9
M	254.0	10
N	14.3	9/16
	INT L.	STANDARD
P	60.3 RAD.	2 3/8 RAD.
R	76.2 RAD.	3 1/32 RAD.
S	19.8 DIA.	25/32 DIA.

T-section is designed to accommodate both DIN and ANSI pipe connections.

Privacy Policy © Wilden Pump & Engineering Company. All Rights Reserved. Online Tech Support

Catalog : Plastic Pumps : T8 - 2" (50.8 mm) Plastic Pump : Flow Curves

Learn more about how to read a Wilden flow curve.

RUBBER-FITTED T8 PLASTIC PUMP

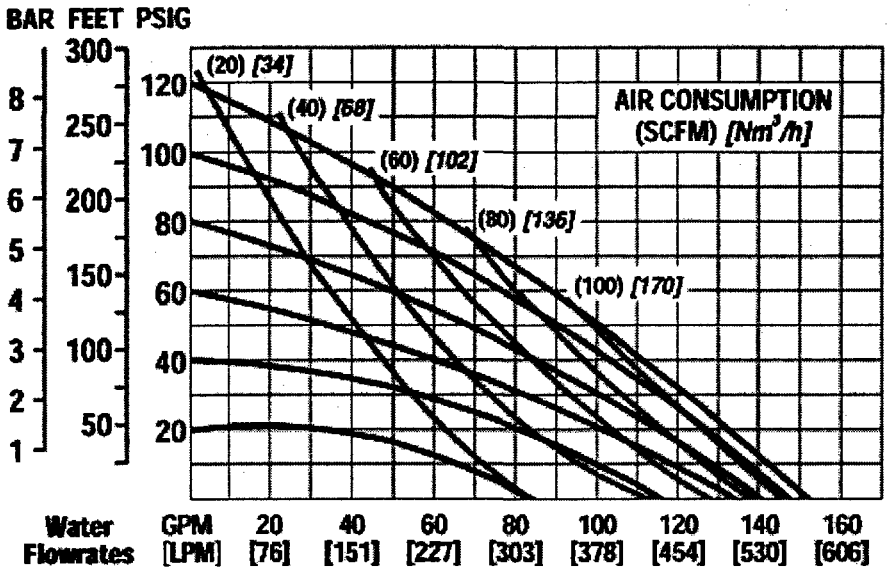

TEFLON®-FITTED T8 PLASTIC PUMP

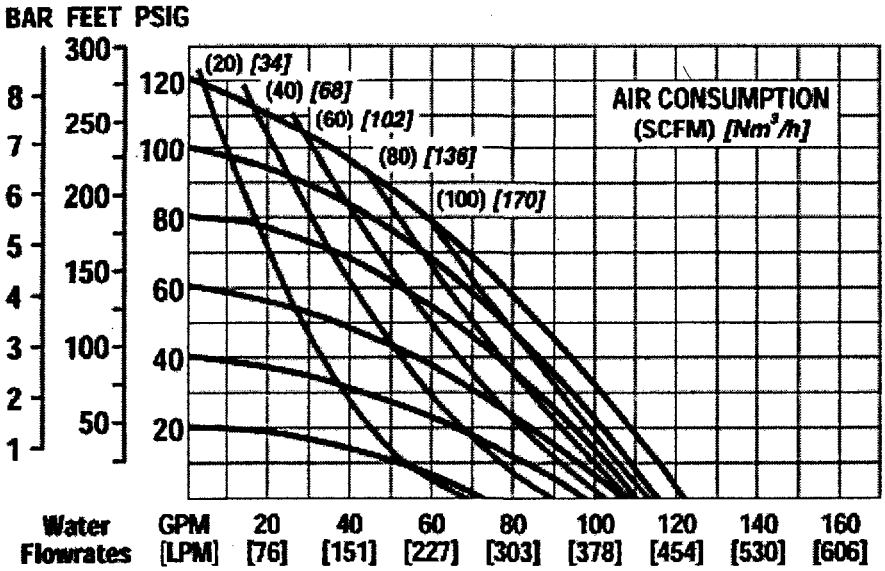

INCLINED PLATE CLARIFIER SYSTEM (CL-101)

CMIPC 3600-2.25
PRELIMINARY DATA SHEET

Proposal #0104-1102 Rev 1.0

New Bedford – Superfund Project

This data sheet includes proprietary information that is the property of Hydro-Flo Technologies and must not be used except in cooperation with Hydro-Flo Technologies. All rights of design or invention are reserved.

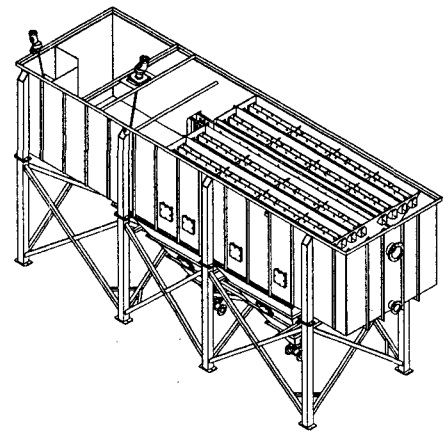

Unit pictured with optional integral flash/floc chambers with mixers

1. Dimensional data (assembled):

a. Height (top of tank)= 198.75 in.
b. Length = 420 in.
c. Width = 147 in.
d. Influent size = 20 in. flange
e. Effluent size = 20 in. flange
f. Sludge outlet = 8 inch flange

2. Plate pack data:

a. Plate size = 30 inches x 72. The plates will be assembled in packs with stainless steel tie rods and polypropylene contoured spacers.
b. Plate area = 15 sq. ft. each plate, Projected Surface Area (PSA)/plate @ 60 degree inclination = 7.5 sq.ft.
c. Each plate pack compartment contains 22 plates at 2.25 inch spacing.
d. Total plate pack compartments = 16.
e. PSA/CMIPC = 7.5 x 22 x 16 = 2,640 sq.ft.
f. Optional plate pack chamber clear view ports (6"x 6") can be provided to permit chamber observation.

3. Volumes & Flows:

a. Influent chamber capacity = 5,220 gal. (Flash & Floc chambers)
b. Effluent chamber capacity = 1,500 gal. @ 57 inches.
c. Sludge chamber capacity = 7,520 gal.
d. Operating volume capacity = 22,370 gal.
e. Operating water elevation = 71.25 inches @ 700 gpm (71.75 inches @ 2,000 gpm)

4. Distribution & Flow Data:

a. Maximum design flow rate = 2,000 gpm (Initial flow rate = 700 gpm)
b. Hydraulic loading ratio (HLR) = 0.265 gpm/sq.ft. Projected Surface Area (PSA) @ 700 gpm.
c. Hydraulic loading ratio (HLR) = 0.757 gpm/sq.ft. Projected Surface Area (PSA) @ 2,000 gpm.
d. One 304SS influent distribution troughs run full length of plate packs.
e. Eight 304SS effluent collection troughs run full length of plates packs at the top of the packs.
f. Maximum flow rate capability per effluent trough =250 gpm per trough (Initial flow 87.5 gpm per trough)
g. Vertical velocity through plate packs @ 700 gpm = 0.48 feet/ minute.

5. Sludge Chamber:

a. Sludge chamber with steep sloped sides (2 sides) of 60 degrees to facilitate solids evacuation.
b. Sludge chamber will have a converging flight center outlet 24 inch diameter bottom auger.
c. Sludge high high level detection sensor located in sludge chamber just below the plate packs.
d. Optional sludge chamber clear view ports (6"x 6") can be provided to permit chamber observation.
e. An optional submerged manway access hatch can be provided on the sludge chamber.

6. Materials of Construction (standard materials):

a. The clarifier is made from A36 carbon steel, ¼" thick minimum.
b. The inclined plates are made from FRP with stainless steel tie rods and end caps. Other resins or plate materials are available optionally.
c. The inclined plate spacers are made from molded polypropylene.
d. The influent and effluent distribution troughs are made from T304 stainless steel.
e. The bottom sludge auger is made from A36 carbon steel, 3/8" thick minimum.

7. Shipping Data:

a. Main tankage (unassembled) = 86.75" high x 147 " wide x 420" long. 36,700 lbs.
b. Support frame with sludge chamber (unassembled) = 112" high x 147"wide x 318" long 15,000 lbs.
c. Approx. total shipping weight = 51,700 lbs. (assembled, including plate packs).

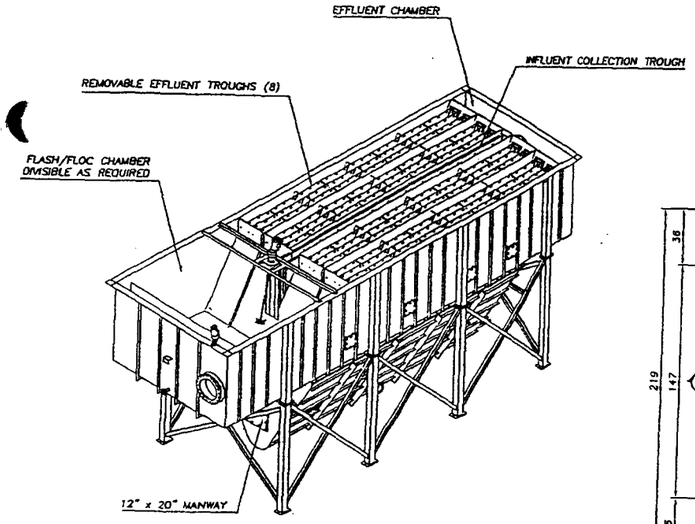

INCLINE PLATE CLARIFIER ISOMETRIC
(PLATFORM DETAILS NOT SHOWN FOR CLARITY)
NO SCALE

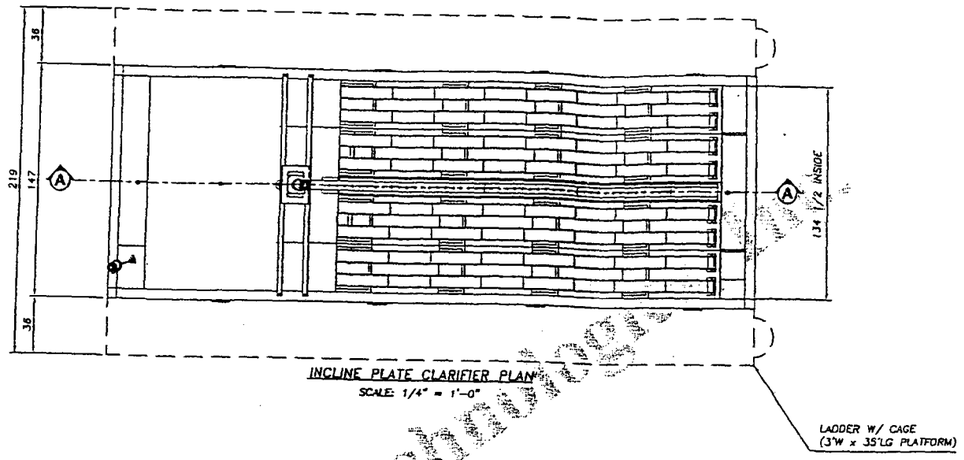

INCLINE PLATE CLARIFIER PLAN
SCALE: 1/4" = 1'-0"

MIN PROJECTED SURFACE AREA @ [illegible]	[illegible]
SHIPPING WEIGHT	51,740 LBS.
OPERATING WEIGHT	250,700 LBS.
FLASH/FLOC TOTAL CAPACITY	3,750 GAL.
EFFLUENT CHAMBER CAPACITY	1,500 GAL.
SLUDGE CHAMBER CAPACITY	7,520 GAL.
TOTAL CAPACITY	22,370 GAL.
16 PCS – ø3/4" x 6" LG. ANCHOR BOLTS REQUIRED	

TYPICAL INTERIOR COATING SPECIFICATIONS

1) INTERIOR SURFACES ARE TO BE BLASTED TO AN SSPC SP-10, NEAR WHITE METAL BLAST AND GIVEN TWO COATS OF COAL TAR EPOXY (16 DFT)
2) ALL THREADS AND GASKET SURFACES TO BE MASKED BEFORE COATING APPLICATION REMOVE ALL MASKING MATERIALS PRIOR TO SHIPMENT
3) ALL COATINGS TO BE APPLIED IN STRICT ACCORDANCE WITH MANUFACTURERS SPECIFICATIONS

TYPICAL EXTERIOR COATING SPECIFICATIONS

1) EXTERIOR SURFACES ARE TO BE BLASTED TO AN SSPC-6, COMMERCIAL BLAST AND GIVEN ONE COAT OF SELF PRIMING EPOXY PAINT (6 DFT) SEE "HYDRO-FLO TECHNOLOGIES PAINT STANDARD"
2) ALL THREADS AND GASKET SURFACES TO BE MASKED BEFORE COATING APPLICATION REMOVE ALL MASKING MATERIALS PRIOR TO SHIPMENT
3) ALL COATINGS TO BE APPLIED IN STRICT ACCORDANCE WITH MANUFACTURERS SPECIFICATIONS

HYDRO-FLO TECHNOLOGIES EXTERIOR PAINT STANDARD

BRAND: RUSTOLEUM OR EQUAL

NAME: RUST-O-THANE TWO PART EPOXY –

* ACTIVATOR 9101
* BASE 9186

COLOR: NAVY GRAY

MATERIALS OF CONSTRUCTION

* CLARIFIER WELDMENT – A36 CARBON STEEL (1/4" THK)
* INCLINED PLATES – FRP ISOPHTHALIC RESIN
* INFLUENT COLLECTION TROUGH – 304SS
* EFFLUENT DISTRIBUTION TROUGH – 304SS
* BOTTOM SLUDGE AUGER – A36. 3/8" THK (S.S. OPTIONAL)
* WEIR ASSEMBLY – FRP, S.S., & PVC OPTIONAL

NOTE

1) UNIT WILL SHIP IN (2) TWO PIECES (TOP PIECE EST. 35,000 LB'S), (BOTTOM EST. 15,000 LB'S)
2) ALL CAULKING, GASKETS, AND BOLTS (EXCEPT FOR ANCHOR BOLTS) ARE PROVIDED
3) PLATFORMS ARE NOT DETAILED. (CONCEPTUAL ARRANGEMENT SHOWN)
4) COVERS ARE NOT SHOWN FOR CLARITY
5) DESIGN FLOW RATE = 700 GPM. (MAXIMUM FLOW RATE CAPACITY = 2,000 GPM)

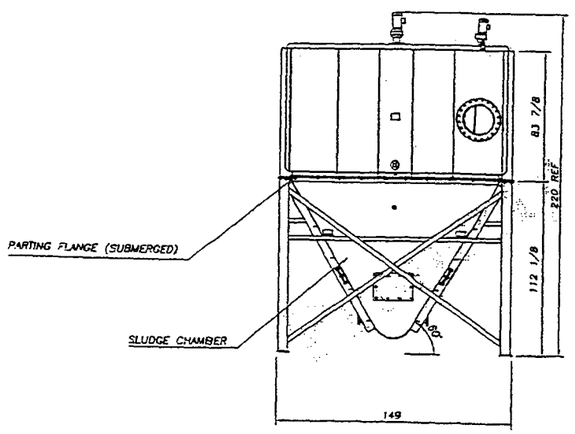

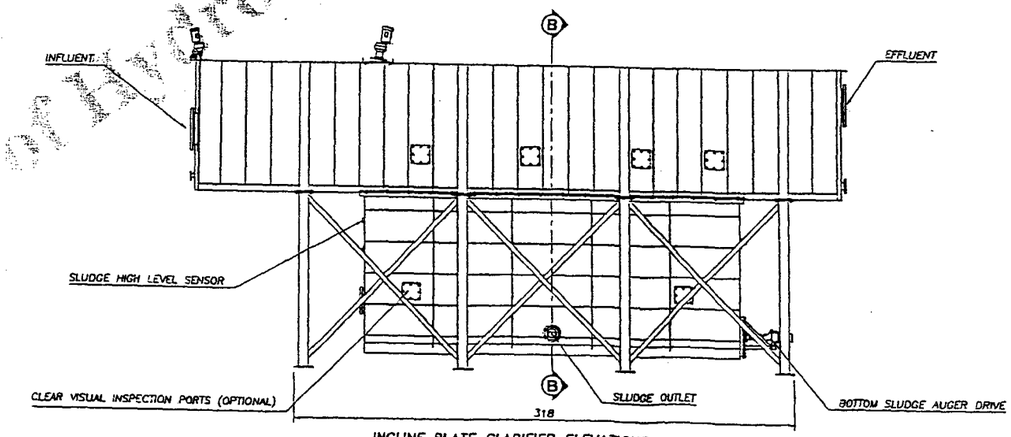

INCLINE PLATE CLARIFIER ELEVATIONS
(PLATFORM DETAILS NOT SHOWN FOR CLARITY)
SCALE: 1/4" = 1'-0"

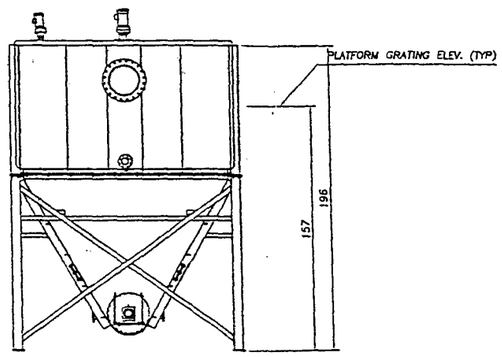

FOR INFORMATION ONLY

HYDROFLO TECHNOLOGIES INC.
3985 Commerce Drive, St. Charles, IL 60174
www.hydroflotech.com

THIS DRAWING IS THE PROPERTY OF HYDRO-FLO TECHNOLOGIES, INC. AND IT IS LOANED UPON THE EXPRESS CONDITION THAT IT SHALL NOT BE COPIED OR REPRODUCED IN ANY MANNER, THAT IT SHALL NOT BE SUBMITTED TO OTHERS FOR EXAMINATION WITHOUT THE CONSENT OF THIS COMPANY, THAT IT SHALL NOT BE USED IN ANY OTHER WAY DETRIMENTAL TO THE INTERESTS OF THIS COMPANY AND THAT IT SHALL BE RETURNED UPON COMMAND.

U.S.A.C.E. CONTRACT DACW33-94-D-0002
NEW BEDFORD SUPER FUND INCLINE PLATE CLARIFIER
INFORMATIONAL DRAWING

TOLERANCES UNLESS NOTED: ±1/16" ALL DIMENSIONS IN INCHES	AMSI D	SCALE: AS SHOWN	DRAWN: AJS DATE: 08/14/01 APPRVD: DATE:
JOB	CUSTOMER		DRAWING NUMBER / SHT NO:
INFO.	FOSTER WHEELER		01041102R1.0 / 2 OF 3

REV	DATE	CHANGES

FOSTER WHEELER

INCLINE PLATE CLARIFIER

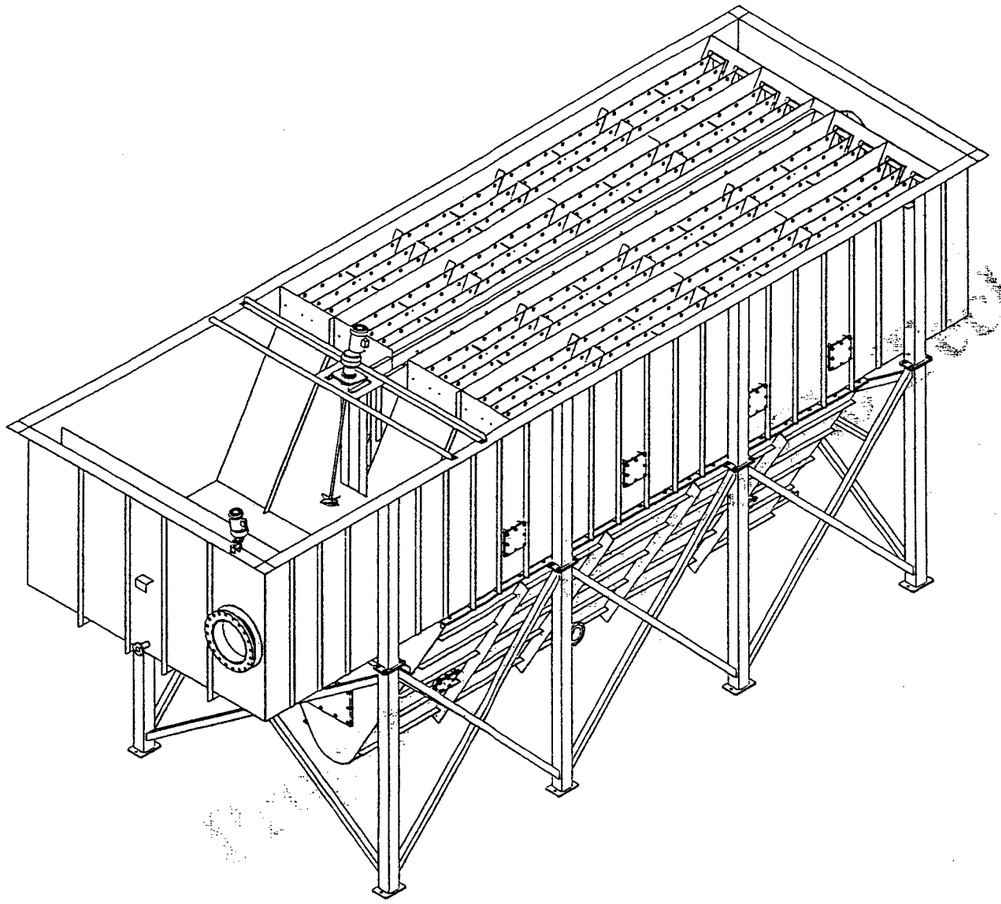

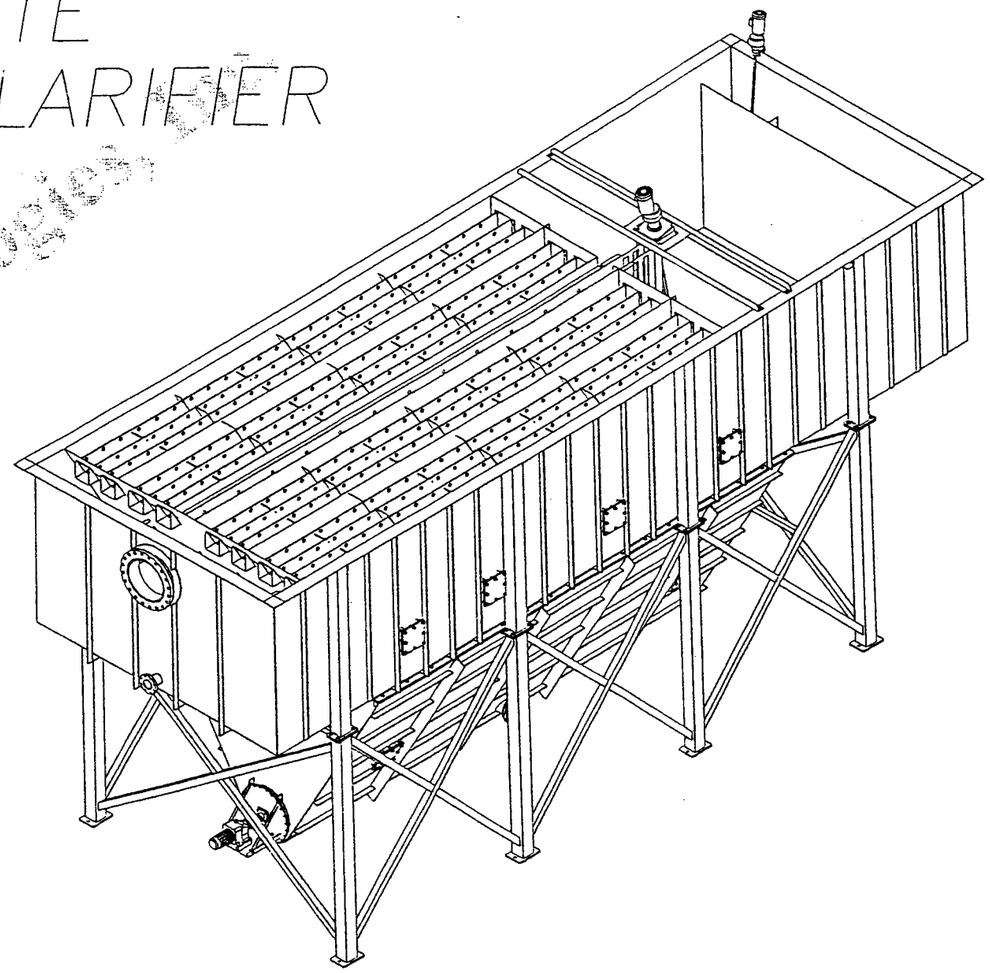

INCLINE PLATE CLARIFIER ISOMETRIC

NO SCALE

HYDROFLO TECHNOLOGIES INC.
3985 Commerce Drive, St. Charles, IL 60174
www.hydroflotech.com

THIS DRAWING IS THE PROPERTY OF HYDRO-FLO TECHNOLOGIES, INC. AND IS TO BE LOANED UPON THE EXPRESS CONDITION THAT IT SHALL NOT BE COPIED OR REPRODUCED IN ANY MANNER, THAT IT SHALL NOT BE SUBMITTED TO OTHERS FOR COMPARISON WITHOUT THE CONSENT OF THE COMPANY, THAT IT SHALL NOT BE USED IN ANY OTHER WAY DETRIMENTAL TO THE INTERESTS OF THE COMPANY AND THAT IT SHALL BE RETURNED UPON DEMAND.

U.S.A.C.E. CONTRACT DACW33-94-D-0002
NEW BEDFORD SUPER FUND INCLINE PLATE CLARIFIER
INFORMATIONAL DRAWING

TOLERANCES UNLESS NOTED: ±1/16" ALL DIMENSIONS IN INCHES	ANSI D	SCALE: AS SHOWN	DRAWN: AJS	DATE: 08/14/01
			APPRVD:	DATE:
JOB	CUSTOMER		DRAWING NUMBER	SHT NO:
INFO.	FOSTER WHEELER		01041102R1.0	1 OF 3

REV	DATE	CHANGES
C1		

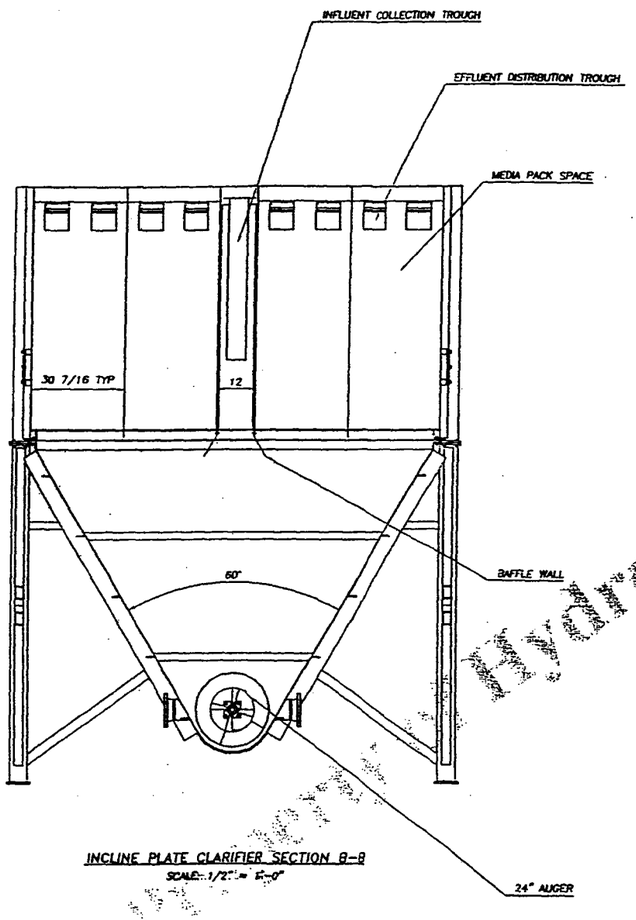

INCLINE PLATE CLARIFIER SECTION B–B
SCALE: 1/2" = 1'–0"

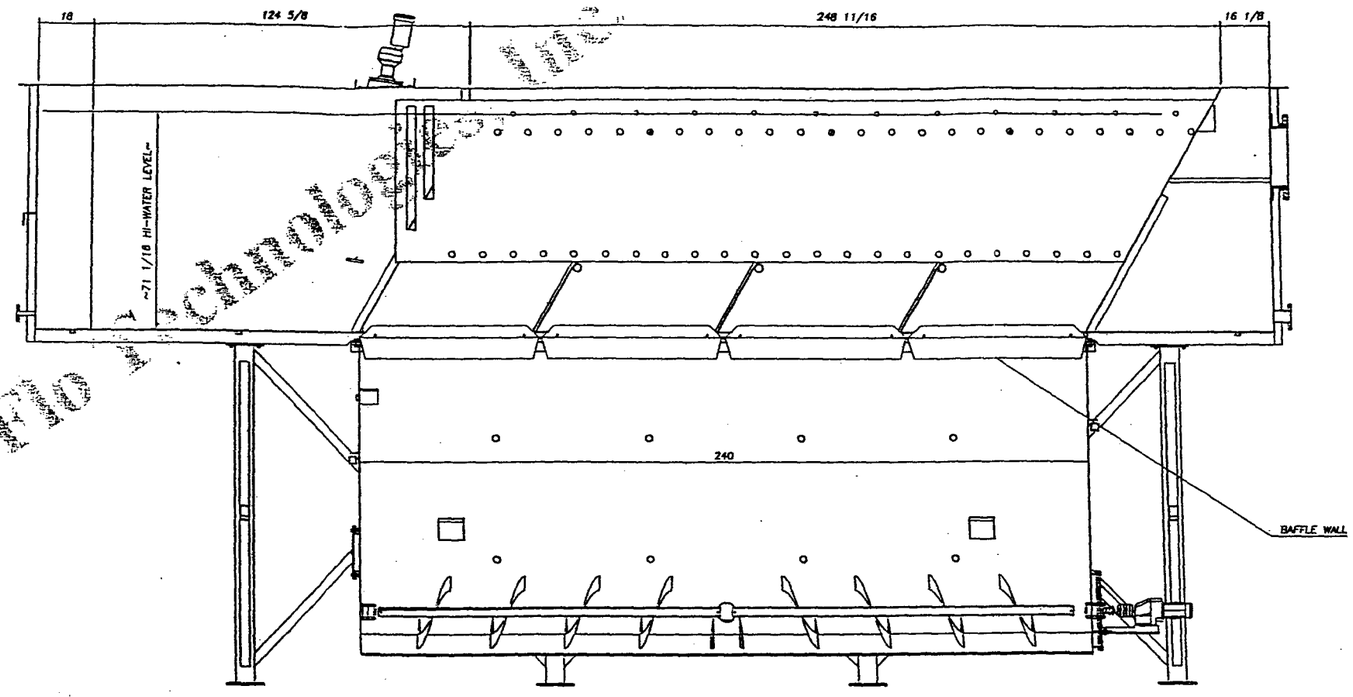

INCLINE PLATE CLARIFIER SECTION A–A
SCALE: 1/2" = 1'–0"

FOR INFORMATION ONLY

HYDROFLO TECHNOLOGIES INC.
3985 Commerce Drive, St. Charles, IL 60174
www.hydroflotech.com

THE DRAWING IS THE PROPERTY OF HYDRO-FLO TECHNOLOGIES, INC. AND IS TO BE RETURNED UPON THE EXPRESS CONDITION THAT IT SHALL NOT BE COPIED OR REPRODUCED IN ANY FORM. THAT IT SHALL NOT BE SUBMITTED TO OTHERS FOR INFORMATION WITHOUT THE CONSENT OF THE COMPANY, THAT IT SHALL NOT BE USED IN ANY OTHER WAY DETRIMENTAL TO THE INTEREST OF THE COMPANY AND THAT IT SHALL BE RETURNED UPON DEMAND.

U.S.A.C.E. CONTRACT DACW33-94-D-0002
NEW BEDFORD SUPER FUND INCLINE PLATE CLARIFIER
INFORMATIONAL DRAWING

TOLERANCES UNLESS NOTED: ±1/16" ALL DIMENSIONS IN INCHES	SIZE D	SCALE: AS SHOWN	DRAWN: AJS DATE: 08/14/01
			APPRVD: DATE:
JOB	CUSTOMER		DRAWING NUMBER / SHT NO:
INFO.	FOSTER WHEELER		01041102R1.0 / 3 OF 3

REV	DATE	CHANGES
0		

SAND FILTRATION SYSTEM (SF-301/302)

VORTISAND®

ADVANCED TECHNOLOGY SERVING THE ENVIRONMENT

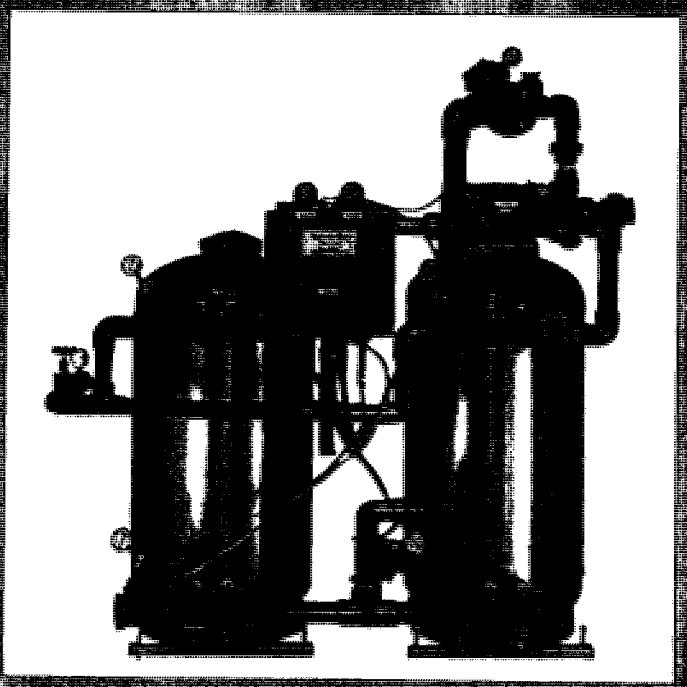

VORTISAND 0,45 MICRON FILTER

FILTRATION SENSITIVITY: 0,45 MICRON
2 MICRON
5 MICRON
10 MICRON

HIGH PERFORMANCE, FULLY AUTOMATED FILTERS

[illegible] VORTISAND® filters [illegible] backwash and rinse cycle, yet they provide outstanding advantages:

- Exceptionally efficient filtration with no clogging
- Longer filtration cycle than conventional filters
- Lower water consumption during backwashing
- Filtration capacity up to 17 gpm/sq. ft. 4 times greater than conventional filters
- Filtration flow: 8 to 1,200 USgpm
- Compact configuration for optimal space utilization
- Longlife stainless steel tank

SIMPLE, EFFICIENT OPERATING PRINCIPLE

[illegible]

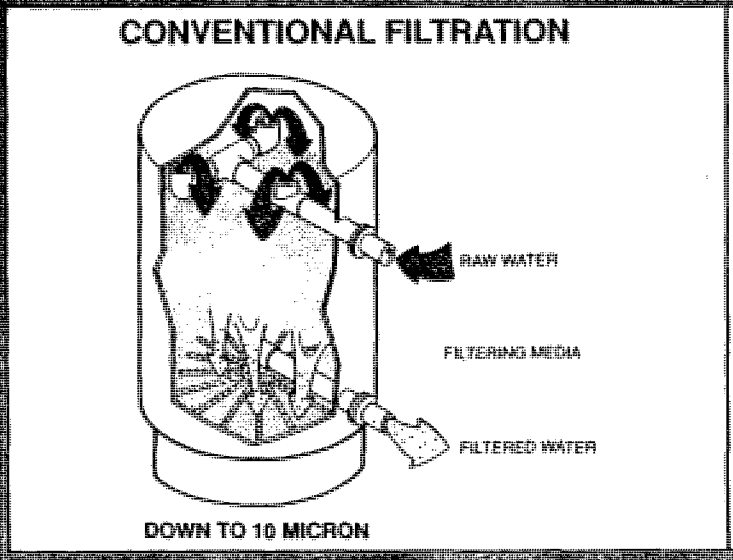

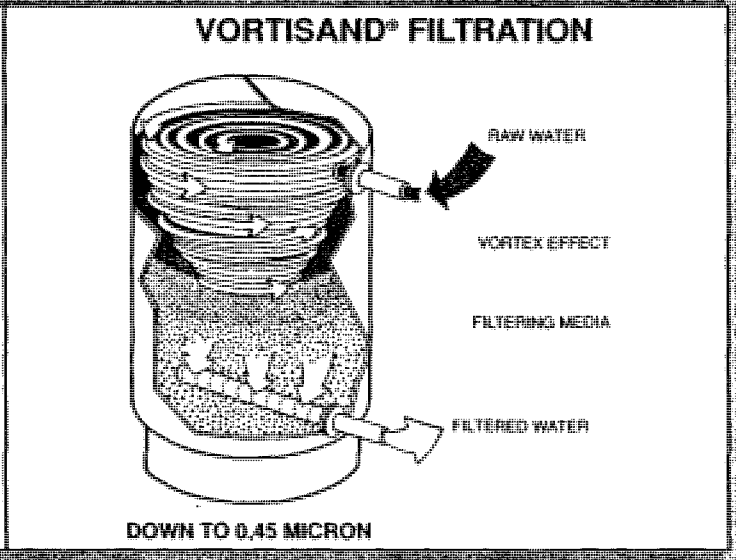

VORTISAND®

0.45 - 2 - 5 or 10 MICRON

VARIABLE & CONSTANT FLOW

MODEL	INSTALLATION SPACE REQUIRED FOR VARIABLE FLOW (V) AND CONSTANT FLOW (C) LENGTH x HEIGHT x DEPTH	OPERATING FLOWRATE USGPM				FLOW REQUIRED FOR BACKWASH PER VESSEL				MOTOR HP				WEIGHT APPROX
		FILTRATION				BACKWASH GPM 5 MINUTES								
	CAST IRON VALVES†	0.45	2	5	10	0.45	2	5	10	0.45	2	5	10	lbs
ATP-12	(V) 22" x 3'-4" x 2'-1" (C) 2-5 x 3'-4" x 1'-6"	8	12	16	—	8	8	8	—	0.33	0.33	0.33	—	200
		15	24	30	—	17	17	17	—	0.5	0.5	0.5	—	
ATP-16	(V) 4'-0" x 6'-1" x 6'-0" (C) 2-5 x 6'-1" x 4'-0"	55	82	72	—	27	27	27	—	1.0	1.0	1.0	—	400
		47	51	60	60	25	25	25	25	1.0	1.0	1.0	1.5	
[illegible]	(V) 5'-10" x 6'-[illegible] x 5'-2" (C) 4-10 x 5'-[illegible] x 2'-6"	84	106	120	150	25	25	25	25	2.0	2.0	2.0	3.0	1000
		141	150	180	210	25	25	25	25	3.0	3.0	3.0	3.0	
[illegible]	(V) 12'-0" x 6'-[illegible] x 8'-0" (C) 11-[illegible] x 6'-[illegible] x 3'-[illegible]	110	[illegible]	240	[illegible]	25	25	25	25	3.0	3.0	3.0	3.0	4000
		250	300	300	350	25	25	25	25	5.0	5.0	7.5	7.5	
[illegible]	(V) [illegible] (C) [illegible]	[illegible]	[illegible]	[illegible]	150	25	25	25	25	5.0	5.0	7.5	7.5	4000
		75	90	100	110	45	45	45	[illegible]	5.0	5.0	5.0	5.0	
[illegible]	(V) [illegible] (C) [illegible]	150	180	200	250	45	45	45	45	5.0	5.0	5.0	5.0	4000
		225	255	300	345	45	45	45	45	5.0	5.0	7.5	7.5	
[illegible]	(V) [illegible] (C) [illegible]	300	360	400	[illegible]	45	45	45	45	5.0	7.5	7.5	7.5	5000
		375	450	500	575	45	45	45	45	7.5	7.5	10.0	10.0	
[illegible]	(V) [illegible] (C) [illegible]	450	510	600	[illegible]	45	45	45	45	10.0	10.0	10.0	15.0	6000
		600	680	800	850	45	45	45	45	15.0	15.0	15.0	15.0	
[illegible]	(V) [illegible] (C) [illegible]	750	850	1000	1150	45	45	45	45	15.0	15.0	20.0	20.0	7000
		900	1020	1200	1350	45	45	45	45	15.0	20.0	20.0	25.0	

VORTISAND variable flow filters are especially designed for an intelligent filtration system that adjusts to solids loading and unforeseen contamination in water flow.

VORTISAND constant flow filters are designed for applications requiring a constant flow of filtered water to maintain filtration. Supplying filtered water should not drop below 50% of the filter filtration rate. The filters remove suspended minerals, organic and biologic matter.

†For non-cast iron valves, remarks are different.

Stand alone system comes with 304 stainless steel vessel and PVC Sch. 80 piping.

ATP system comes with fiberglass vessel and PVC Sch.80 piping.

LEGEND: A x X
- A — vessel diameter in inches
- X — number of vessels

Please consult your representative for more information.

The manufacturer reserves the right to make changes without notice.

VORTISAND®

A MULTITUDE OF APPLICATIONS!

POTABLE WATER

- Filtration before disinfection (to 0.45 micron)
- Removal of turbidity and suspended matter in water
- Lower Silt Density Index

FILTRATION

- Filtration (5 micron) for
  - Public swimming pools
  - Aquariums
  - Waterslides
  - Aquaculture (fish breeding)

WASTE WATER

- Tertiary treatment after electrocoagulation to remove suspended solids
- Pretreatment before disinfection and ultraviolet light sterilization
- Treatment after settling tanks and decanters
- Removal of suspended heavy metals (up to 0.45 micron)
- Pretreatment before ion exchange system
  (Ex.: VITROKELE, ion exchange)

ULTRAPURE WATER

- Prefiltration to remove suspended solids, reducing or eliminating need for cartridges
- Reduction in Silt Density Index readings
- Prefiltration for reverse osmosis, ion exchange systems, activated carbon and solid media

INDUSTRIAL APPLICATIONS

- Filtration of process water (to 0.45 micron)
- Cooling towers (5 micron)
- Cooling water for pumps, heaters, etc.
- Wash water (filtration)
- Dilution water

Sonitec

85 Sargeant St., Holyoke, Massachusetts 01040
Tel.: (413) 532-6089 — Fax: (413) 534-5893

Printed in Canada

VORTISAND

SPECIFICATIONS

Proposal #3103

HARBOR WATER APPLICATION

MODEL A12-30-SP / 2 banks of 6 vessels

	DESCRIPTION	SPECIFICATIONS		
A	System Media Sizing	2	µm	Nominal
B	Number of vessels	12	units	
C	Vessel Diameter & Height	30" ϕ x 55 " H		
D	Filtration Flow	1 200	gpm	
F	Filtration Capacity during Backwash	1 100	gpm	
G	Gallons required per tank for rinse	75	gpm	For 1 minute
H	Backwash Flowrate (per vessel)	45	gpm	Min. 30 psi Max. 100 psi
I	Backwash Duration	5	Minutes	
J	Vessels construction	SS 304, Built according to ASME, Sec.VIII Div.1 (125 psig)		
K	Underdrain	PVC Non fouling High Efficiency		
L	Valves	Aquamatic cast iron body / Diaphragm type		
M	Face Piping & Fittings	PVC Schedule 80		
N	Centrifugal Filter Pump	Cast iron body - Centrifugal type / 50' TDH		
O	Motor	ODP 20 HP 460 V / 3 PH / 60 HZ		
P	Automatic Control Panel	Nema 12 enclosure with Omron PLC		
Q	Backwash waste (piping diameter)	2	in.	
R	City Water Inlet (diameter)	2	in.	
S	Filter Face Piping Size (Inlet/Outlet)	8	in.	
T	Maximum Operating Pressure	100	psig	
U	Maximum Operating Temperature	105	F	
V	Installation Space Required	23'3" L x 6'3" H x 9'8" D (two banks of 6 vessels)		
W	Approximate Weight	28 500	lbs	

OPTION
SYSTEM INCLUDES 12 TANKS
ALL TANKS ASME CERTFIED AND STAMPED

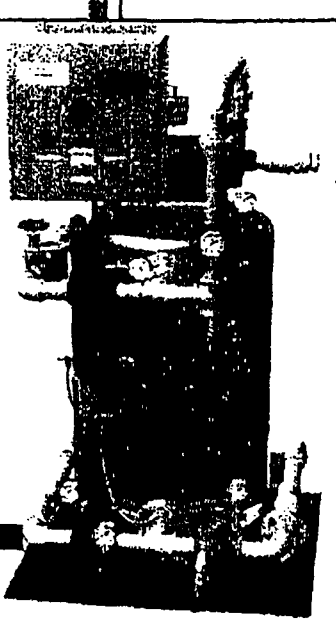

FEED	
1 200	gpm Total
100	gpm/vessel
8	Inlet

BACKWASH	
45	gpm
8	minutes
2.0	Outlet

FILTERED WATER	
1 200	gpm Total
100	gpm/vesse
8	Outlet

CONTROL PANEL

NEMA 12 Enclosure C/W PLC
Including differential pressure switch
backwash counter, alarm,
manual push button
stager, main disconnect switch
and motor starter for the pump
Dry contact for B.A.S.

Sonitec INC.

A12-30-SP-2M.xls

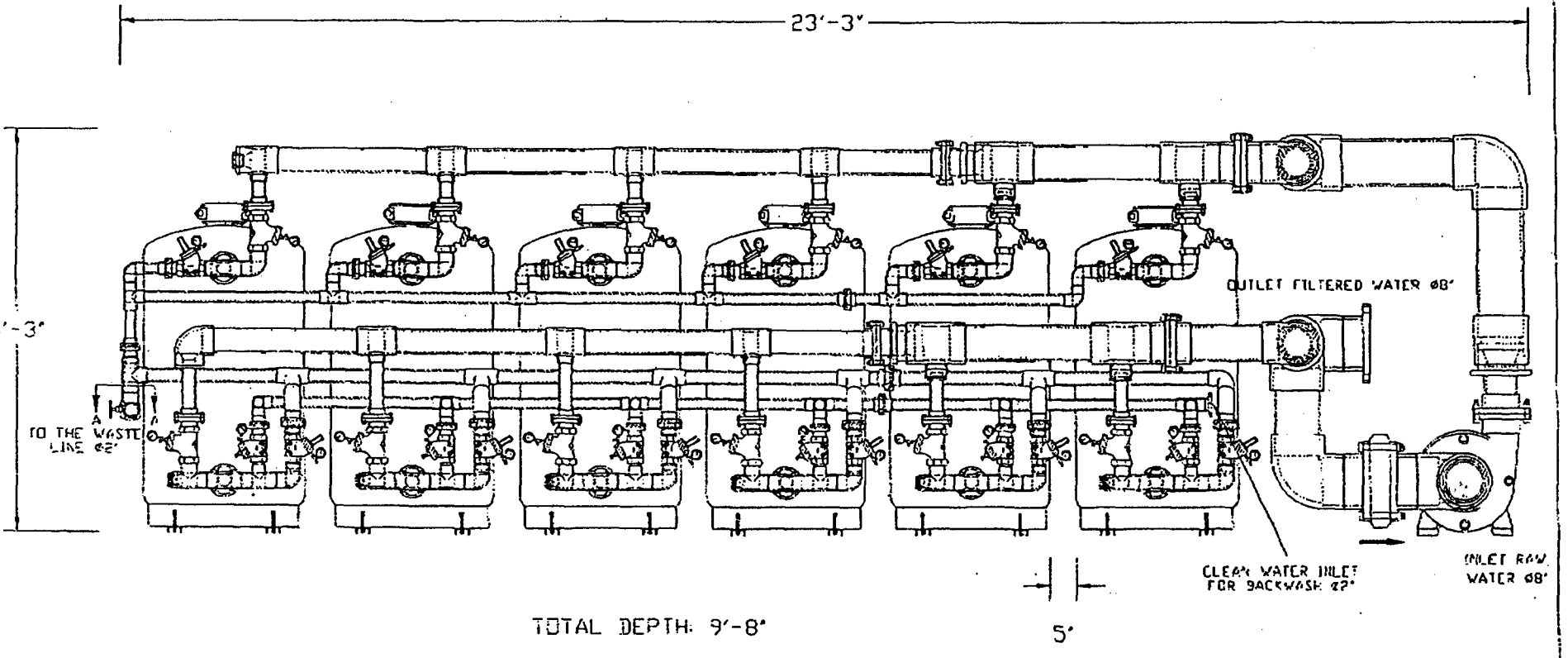

SECTION A-A

For illustration purposes only

REV.	DESCRIPTION	DATE	BY

SONITEC INC

NAME:

TITLE: VORTISAND® A12-30-SP

DRAWN BY: B.B.	APPR. BY
VER BY:	SCALE: ---
DATE JUNE 14 1994	NO: -30-SP

COPYRIGHT
THE INFORMATION AND CONTENTS OF THIS DRAWING ARE THE SOLE PROPERTIES OF SONITEC INC. AND CANNOT BE USED OR REPRODUCED OR DISTRIBUTED IN ANY FORM OR BY ANY MEANS WITHOUT PRIOR WRITTEN PERMISSION FROM SONITEC INC.

NOTE : ALL DIMENSIONS ARE APPROXIMATE AND MAY VARY AT FABRICATION

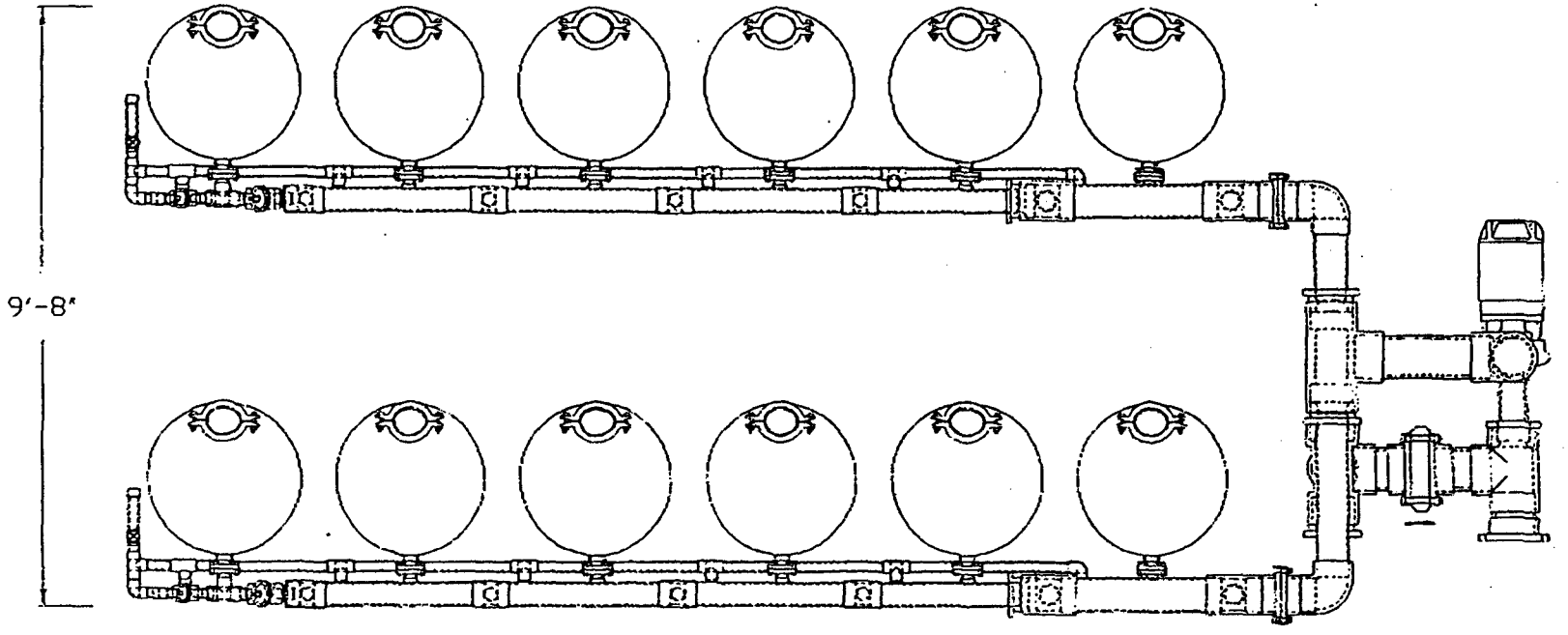

For illustration purposes only

REV.	DESCRIPTION	DATE	PAR

SONITEC INC.

NOM:

TITRE: VORTISAND® A12-30-SP

DESS. PAR: B.B. | APPR. PAR:

VERIF. PAR: | DATE: JUNE 14 1994

ECHELLE: --- | NO. A12-30-SP

POLISHING FILTRATION SYSTEM (PF-401/402)

CUNO Filters

June 27, 2001 3|15

Joe Francis 617 457-8409
Foster Wheeler 617 457-8498fx
133 Federal St.- 6th flr
Boston, MA 02110

Re: New Bedford Harbor Cleanup Project

Dear Joe,
Thank you for meeting with Leon Martin and myself regarding your water filters. With the addition of the mesh screen and plate & frame prefilters along with the sand filter in the new conceptual design this will all improve the service life of the cartridge filters. The Cuno Micro-Klean's rigid, resin bonded construction and true graded density design will be critical to the removal of the PCB's and also greatly improve the life of the GAC filters; as you have proven on-site previously.

Since meeting with you we have discussed your application with Cuno and examined the Cartridge data and concluded 67% of your filter life will be used during the first 0-5 PSID and the last 33% will be used during the next 6-20 PSID. Therefore there is no benefit in your application to run the filters past 20 PSID.

Please change out filters at 20 PSID.

MWM is pleased to quote the following duplex system for 700GPM:

2 pcs. CUNO Housing Model # ES36120D4B1GAE3BB, 304 S.S., ASME Code 150 PSI @ 250°F, 8" Flanged Side Inlet and 180° Side Outlet with clean & dirty drains, vent connection and gauge connections.

$ 23,778.00 each pc.

Each unit holds 120 pcs. of the following:

120 pcs. CUNO Micro-Klean # G78B8-4N, 5 μm nominal / 20μm absolute, 39" long, rigid, resin bonded depth filter with grooves for added surface area and life.

$ 15.66 each

Please give me a call with any questions; we are trying to set up a filtration seminar to come in for a couple hours over lunch.

Thank you,

Jim McCluskey

distributed by: MWM Company Inc.
11 Newbury St. / PO Box 710067
Quincy, MA 02171
tel: 617-328-1920/fax: 617-472-4260

MWM Filters

August 8, 2001

Erin Griffin
Foster Wheeler
133 Federal St.- 6th flr
Boston, MA 02110

617 457-8294
617 457-8499fx

Re: New Bedford Harbor Cleanup Project

Dear Erin,
Thank you for calling regarding your water filters at the increased flow rate of 2000GPM. With the addition of the mesh screen and plate & frame prefilters along with the sand filter in the new conceptual design this will all improve the service life of the cartridge filters. The Cuno Micro-Klean's rigid, resin bonded construction and true graded density design will be critical to the removal of the PCB's and also greatly improve the life of the GAC filters; as you have proven on-site previously.

We will keep with our initial plan to keep the flow rate per cartridge as low as we can to get the longest cartridge service life possible. For 2000 GPM you need 3 units to run. For backup while you change out we recommend 2 units that will give you 1440 GPM or 72% of your total flow rate with the same filter life. For backup you could actually flow the whole 2000 GPM through 1 unit; however you would not get good service life.

MWM is pleased to quote the following duplex system for 2000GPM:

5 pcs. CUNO Housing Model # ES36120D4B1GAE3BB, 304 S.S., ASME Code 150 PSI @ 250°F, 8" Flanged Side Inlet and 180° Side Outlet with clean & dirty drains, vent connection and gauge connections.

$ 23,778.00 each pc.

Each unit holds 120 pcs. of the following:

120 pcs. CUNO Micro-Klean # G78B8-4N, 5 µm nominal / 20µm absolute, 39" long, rigid, resin bonded depth filter with grooves for added surface area and life.

$ 15.66 each

Please give me a call with any questions; we are trying to set up a filtration seminar to come in for a couple hours over lunch.

Thank you,

Jim McCluskey

11 Newbury St. / PO Box 710067
Quincy, MA 02171
tel: 617-328-1920/fax: 617-472-4260
MWM@MWMcoinc.com

2

MWM Filters

August 8, 2001

Foster Wheeler

Filtration Notes:

Each unit holds 120 forty inch long filters.

Normal Operation Run 2000 GPM thru 3 units= 1.4 GPM per 10" filter.

Options When changing filters @ 20 PSID:

1. Use one backup unit and run all 2000 GPM thru= this will give you very short filter life.
2. Use one backup unit and slow flow down to 720 GPM (36%) and get normal service life.
3. Use two backup units and run all 2000 GPM thru= this will give you 2.09 GPM per 10" filter, which will be fine.
4. Use two backup units and slow flow down to 1440 GPM (72%) and get normal service life.

These options are really up to you for the maximum service life of the filter cartridges we recommend option 2 or 4.

Please give me a call with any questions.

Thank you,

Jim McCluskey

11 Newbury St. / PO Box 710067
Quincy, MA 02171
tel: 617-328-1920/fax: 617-472-4260
MWM@MWMcoinc.com

Each Unit Holds
120 Forty inch filters

2000 GPM thru 3 units

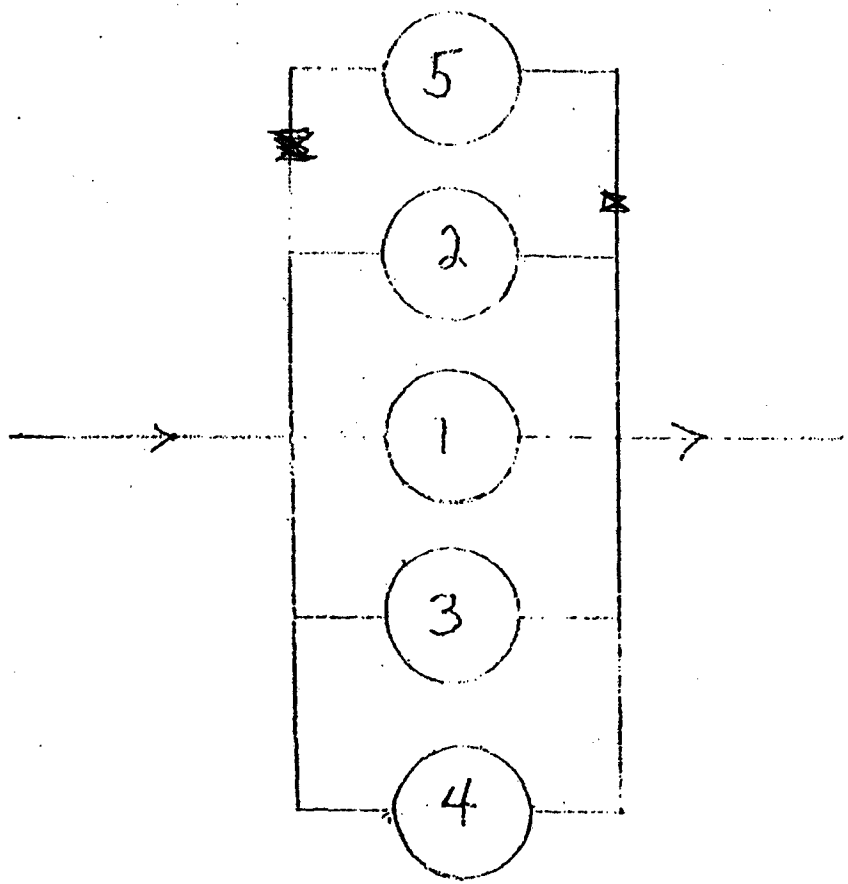

Micro-Klean®

Premium Resin Bonded Filter Cartridges

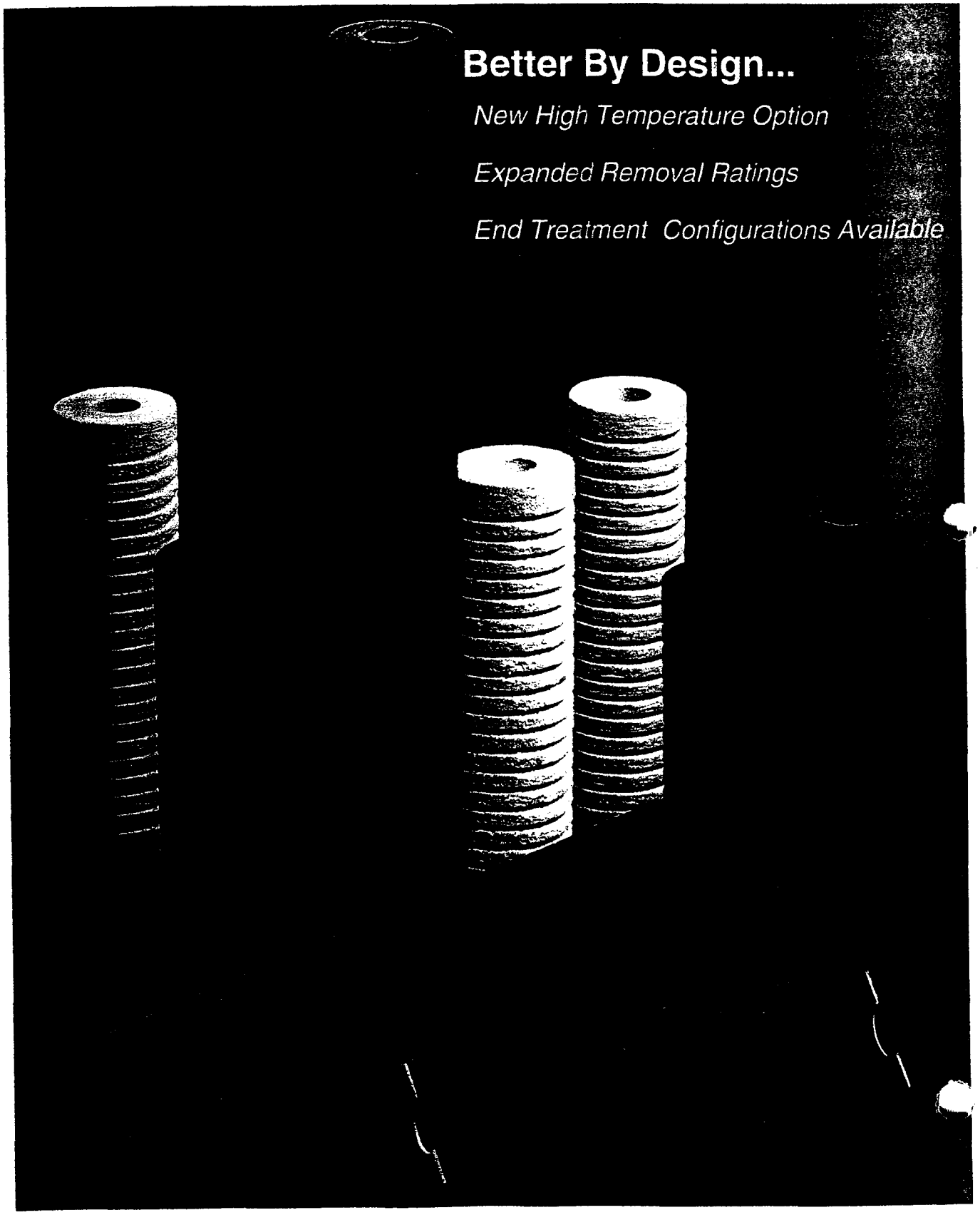

Micro-Klean III - *Better By Design*

Features	Benefits
■ Graded Density Design	■ Low Pressure Drop and Long Life for Consistent Filtration Performance
■ Rigid Resin Bonded Structure	■ No By-pass or Unloading with High Pressure Drops or Pressure Surges
■ No Metal or Plastic Cores	■ Easy Disposal
■ Broad Chemical Compatibility	■ For Chemically Aggressive Applications
■ 300°F Acrylic Cartridge Multi-length Option	■ Ease of Installation and Removal in High Temperature Applications
■ Available in FDA (CFR21) Compliant Materials	■ Suitable for Food, Beverage, and Pharmaceutical Applications
■ Available with Optional End Treatments	■ Can be used in Competitive Filter Housings
■ Broad Range of Ratings from 7µm Absolute to 150µm Nominal	■ Wide Range of Effective Applications

Design

The exclusive Micro-Klean III manufacturing process produces a rigid, resin bonded, graded density structure that eliminates by-pass and the unloading characteristics of soft and easily deformable, competitive filter cartridges such as spiral wound, melt-blown and string wound cartridges. The design of Micro-Klean III provides a family of filter cartridges that offer distinct advantages:

- ☐ Consistent particle removal efficiencies with sharp cut-offs,
- ☐ Extended cartridge life,
- ☐ Ability to withstand high temperatures and elevated differential pressures,
- ☐ Broad chemical compatibility, and
- ☐ Consistent batch to batch filtration characteristics.

Construction

Micro-Klean III filter cartridges are the product of continuous refinement of manufacturing and fiber technologies. Available in both grooved and ungrooved versions, Micro-Klean III filters are ideal for a wide variety of applications. The grooving of the outer surface significantly increases the filter's effective surface area, and increases the contaminant holding capacity. The ungrooved version of the Micro-Klean III is excellent for the removal of gels and other deformable contaminants. To ensure compatibility with a wide range of process fluids, Micro-Klean III is available in different combinations of fiber type and resin (see table 1). For more information about chemical compatibility and Micro-Klean III, refer to CUNO publication GF.G02.

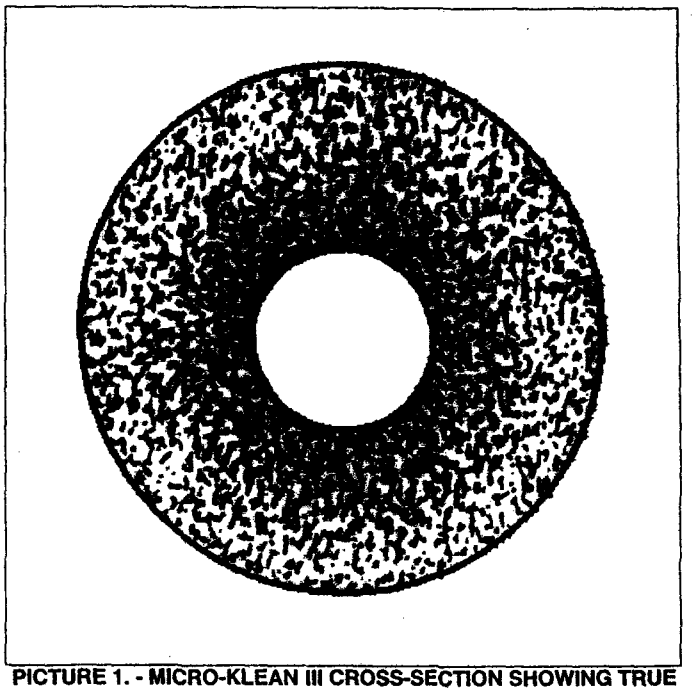

PICTURE 1. - MICRO-KLEAN III CROSS-SECTION SHOWING TRUE GRADED DENSITY DESIGN

FORMULATION	FIBER	RESIN
2	Cellulose/Glass*	Melamine
	Cellulose (FDA Compliant)	Melamine
3	Cellulose/Glass*	Phenolic
	Cellulose	Phenolic
7 (Z Grade)	Acrylic/Glass	Phenolic
8	Acrylic	Phenolic
* Available only as 3 micron rated cartridges		

TABLE 1. - CARTRIDGE FORMULATIONS

OPERATING DATA

Standard Micro-Klean III formulation is designed for maximum operating temperatures up to 300°F depending upon options selected. Use of Cuno's patented polyethylene foam flat gasket for enhanced sealing limits the maximum operating temperature to 200°F. Micro-Klean III filter cartridges will withstand differential pressures of up to 70 psid. To enhance both filter life and filtration efficiency, Cuno recommends use of the lowest possible flow rate and filter replacement at 35 psid.

The **Micro-Klean III Z Grade** Performance Engineered cartridges (Picture 2) combine absolute (99.9%) removal efficiencies, at 7, 10, 12, and 15 µm, with high flow, low differential pressure, and enhanced life. All Z grade cartridges include a polyethylene foam flat gasket to provide optimum sealing (200°F maximum operating temperature). Other performance parameters, including differential pressure limits are the same as standard Micro-Klean III.

PICTURE 2. - MICRO-KLEAN III Z GRADE CROSS-SECTION

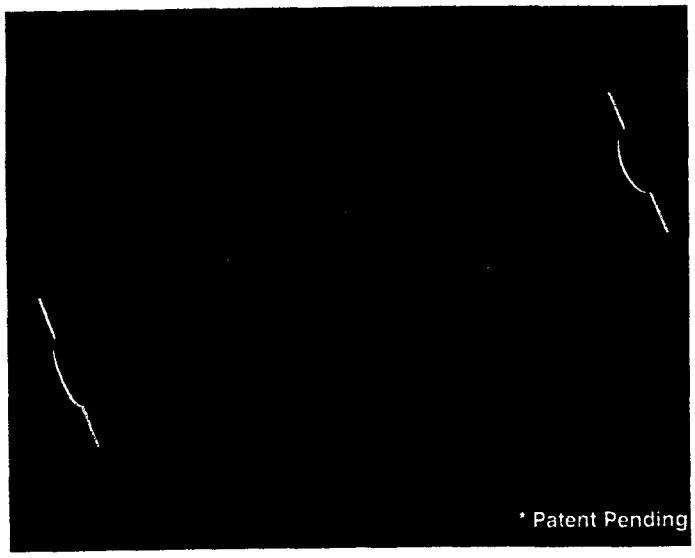

SHOWING DUAL LAYER

Micro-Klean III High Temperature option is recommended for applications with operating temperatures from 180°F to 300°F. The high temperature cartridge is the standard acrylic fiber and phenolic resin formulation with multi-length (19 1/2 " to 40" long cartridges) bonding using a filter grade high temperature resin for durability in the installation and removal process. All high temperature, o-ring end treatments will be polyester.

PERFORMANCE

Micro-Klean III combines the principles of surface and depth filtration in one cartridge to provide enhanced filter service life, particle removal efficiency and optimum flow characteristics.

Enhanced Service Life

Laboratory testing has shown that, compared to competitive products of equally reported retention ratings, Micro-Klean III can hold up to 2 or more times the contaminant (Graph 1) by weight.

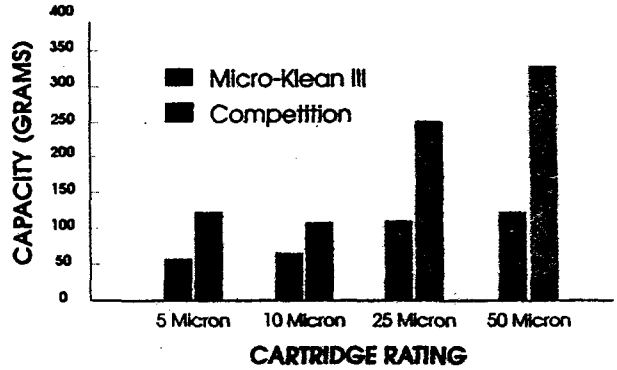

Particle Removal Efficiency

Continuous, on-line, nondestructive testing during the manufacturing process ensures consistent batch to batch cartridge performance. Micro-Klean III particle removal efficiencies provide a sharp cut-off and consistent particulate removal throughout the cartridge life as shown in Graph 2 below.

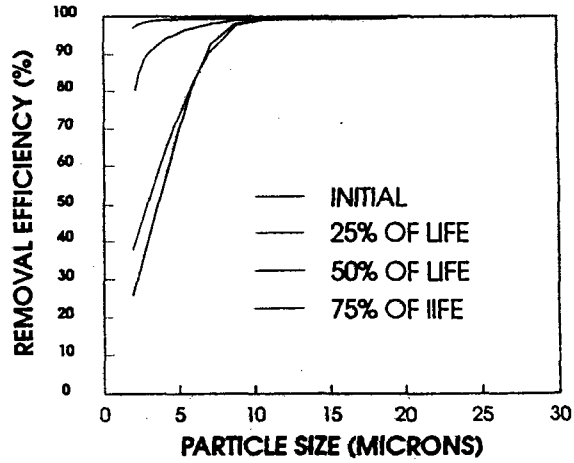

Turbidimetric Efficiency

Micro-Klean III exhibits a constant and uniform effluent turbidity for nearly 70% of its service life (Graph 3). Non-rigid filters, wound or melt blown, by comparison can exhibit erratic effluent turbidities as they load and unload, indicating by-pass.

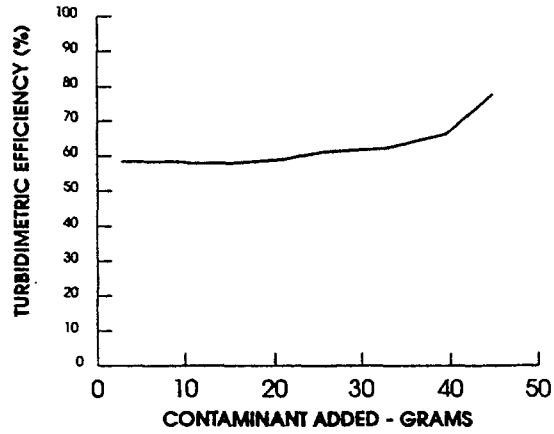

GRAPH 3. - TYPICAL MICRO-KLEAN TURBIDIMETRIC EFFICIENCY to 10 psid pressure drop

Maximum Aqueous Flow Rates

Recommended maximum aqueous flow rates for the range of cartridge ratings are listed in table 2. Note that the flow rate is per 9 3/4" long cartridge.

GRADE DESIGNATION	RATING (Microns)	*FLOW RATE (gpm)
Z7070	7 Absolute	3
Z7100	10 Absolute	3
Z7120	12 Absolute	4
Z7150	15 Absolute	4
Y	1 Nominal	4
A	3 Nominal	4
B	5 Nominal	5
C	10 Nominal	5
F	25 Nominal	6
L	50 Nominal	6
Q	75 Nominal	8
V	100 Nominal	8
W	125 Nominal	8
X	150 Nominal	8
* PER 9 3/4" ELEMENT		

TABLE 2. - AQUEOUS FLOW RATES

Cartridge Configurations

Standard Micro-Klean III filter cartridges are available in multiple lengths with or without various end treatments to fit your current housing (Table 3). Note that for applications with operating temperatures greater than 180°F, use the Micro-Klean III High Temperature formulation. Standard Z grade cartridges utilize a polyethylene flat gasket with a maximum operating temperature of 200°F.

PARAMETER	DESCRIPTION
Length	9 3/4" to 40"
Inside Diameter	1 1/16"
Outside Diameter	2 19/32"

TABLE 3. - MICRO-KLEAN III PARAMETERS

Special Configurations

Micro-Klean III is available in special configurations including polypropylene, polyester o-ring and a variety of other end treatments. The length, outside diameter, and inside diameter can be designed to your custom requirements. Consult your local CUNO Distributor for more information.

Filter Housings

Cuno manufactures a full line of Micro-Klean III compatible filter housings to meet most application requirements. Models are available for both air and liquid applications in a wide range of construction materials, from plastics to ASME Code Design with 316 L stainless steel, to suit a variety of application needs. For more information about CUNO filter housings, consult your local CUNO distributor.

- 1M - Plastic
- CT - Brass
  Stainless Steel
- AL - Steel
  Stainless Steel
- DC - 304 S.S
  316 S.S.
- PL - ASME Design
- FL - ASME Design
  All Variations
- 1H - High Pressure
- VC - PVC Range
- PC - Steel
  Stainless Steel
- CTG-Klean - Exclusive
  totally enclosed filter pack

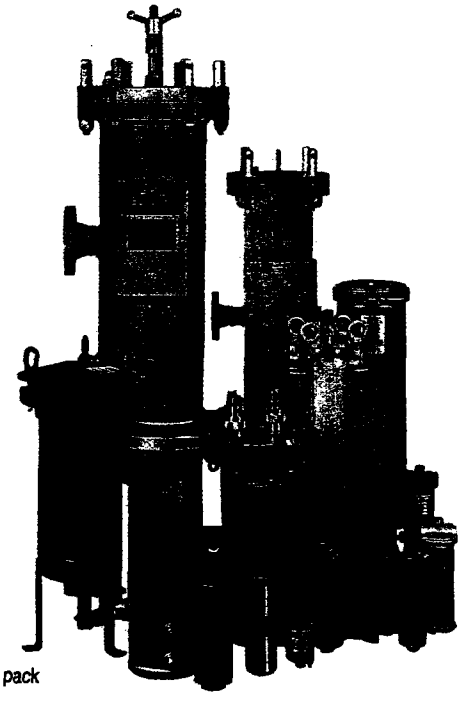

Disposal

Micro-Klean III filter cartridges can be incinerated, shredded, or crushed after use to reduce overall disposal costs. For more information about Micro-Klean disposal, ask your local CUNO distributor for literature GF.TD2.

Micro-Klean III - *Better By Design*

New High Temperature Option

Expanded Removal Ratings

End Treatment Configurations Available

Micro-Klean III Ordering Guide

Standard Product

SURFACE TYPE	CARTRIDGE LENGTH *	DESIGNATION GRADE - Rating	FORMULATIONS AVAILABLE	CARTRIDGE LENGTHS *	OPTIONS
G - Grooved	78 - 9 3/4"	Y - 1µm	8	1	N - None
U - Ungrooved	80 - 10"	A - 3µm	2,3,8	2	G - Polyethylene Gasket
		B - 5µm	2,3,8	3	X - 316 S.S. Core Extender
		C - 10µm	8	4	P - Polypropylene core Extender
		F - 25µm	2,3,8		S - Shrink Wrap
		L - 50µm	2,3,8		T - Tissue Wrap
		Q - 75µm	8		
		V - 100µm	8		
		W - 125µm	8		
		X - 150µm	8		

Micro-Klean III Z Grade

SURFACE TYPE	CARTRIDGE LENGTH *	MEDIA	GRADE	CARTRIDGE LENGTHS *	END TREATMENT
G - Grooved	78 - 9 3/4"	Z7 - Virgin Acrylic Fiber	070	1	G - Polyethylene Gasket
U - Ungrooved	80 - 10"		100	2	
			120	3	
			150	4	

Micro-Klean III High Temperature

SURFACE TYPE	CARTRIDGE LENGTH *	DESIGNATION GRADE - Rating	FORMULATIONS AVAILABLE	CARTRIDGE LENGTHS *	TEMPERATURE OPTION	END TREATMENT OPTIONS **	GASKET/O-RING
G - Grooved	78 - 9 3/4"	Y - 1µm	8	1	H - High Temperature	N - None	N - None
U - Ungrooved	80 - 10"	A - 3µm	8	2		X - 316 S.S. Core Extender	A - Silicone
		B - 5µm	8	3		B - Single Open End, 226 Bayonet Lock & Fin	B - Fluorocarbon
		C - 10µm	8	4		C - Single Open End, 222 O-ring & Fin	C - EPR
		F - 25µm	8			F - Single Open End, 222 O-ring & Flat Cap	D - Nitrile
		L - 50µm	8				
		Q - 75µm	8				
		V - 100µm	8				
		W - 125µm	8				
		X - 150µm	8				

* Cartridge overall lengths will be multiples of either 9 3/4" or 10".
** B, C, and F options constructed of polyester.

Special Configurations

Micro-Klean III is available in special configurations including polypropylene end treatments. The length, outside diameter, and inside diameter can be designed to your custom requirements. Consult your local CUNO Distributor for more information.

WARRANTY

Seller warrants its equipment against defects in workmanship and material for a period of 12 months from date of shipment from the factory under normal use and service and otherwise when such equipment is used in accordance with instructions furnished by Seller and for purposes disclosed in writing at the time of purchase, if any. Any unauthorized alteration or modification of the equipment by Buyer will void this warranty. Seller's liability under this warranty shall be limited to the replacement or repair, F.O.B. point of manufacture, of any defective equipment or part which, having been returned to the factory, transportation charges prepaid, has been inspected and determined by the Seller to be defective. THIS WARRANTY IS IN LIEU OF ANY OTHER WARRANTY, EITHER EXPRESSED OR IMPLIED, AS TO DESCRIPTION, QUALITY, MERCHANTABILITY, FITNESS FOR ANY PARTICULAR PURPOSE OR USE, OR ANY OTHER MATTER. Under no circumstances shall Seller be liable to Buyer or any third party for any loss of profits or other direct or indirect costs, expenses, losses or consequential damages arising out of or as a result of any defects in or failure of its products or any part or parts thereof or arising out of or as a result of parts or components incorporated in Seller's equipment but not supplied by the Seller.

Service Worldwide

Fluid Purification

CUNO Pacific Pty Ltd
140 Sunnyholt Road
Blacktown, NSW 2148
Australia

CUNO Latina Ltda
Rua Amf Do Brasil 251
18120 Mairinque-Sp
Brazil

CUNO Europe SA
Chemin du Contre Halage
62730 - Les Attaques
France

CUNO GmbH
Wihl-Th-Römheld-Str. 32
55130 Mainz
Germany

CUNO Srl
Via Tonale n°3
20037 Paderno Dugnano
Italy

CUNO K.K.
Hodogaya Station
Building 6F
1-7 Iwai-cho, Hodagaya-ku
Yokohama 240 Japan

CUNO Filtration Asia Pte Ltd
1 Tech Park Cresent
Singapore 638131

CUNO Europe
Tachbrook Park Drive
Tachbrook Park
Warwick CV34 6TU
United Kingdom

Cuno Incorporated
400 Research Parkway
Meriden, CT 06450, U.S.A.
Tele: (203) 237-5541
Fax: (203) 238-8977

© CUNO INCORPORATED, 1997 - ALL RIGHTS RESERVED

LITCMK.001.1093

CUNO®

Fluid Purification

The Clear Solution

To Challenging Filtration Applications

10/15

BETA-KLEAN FEATURES AND BENEFITS

FEATURE	ADVANTAGE	BENEFIT
◆ Absolute rated cartridge filters from 5 - 70 microns	◆ Absolute filtration efficiency at the specified removal rating	◆ Consistent production yields with absolute contaminant retention
◆ Rigid resin bonded structure	◆ No by-pass or unloading at high differential pressure	◆ Consistent product quality throughout the filter's life
◆ Grooved surface with true graded-density internal structure	◆ Significantly longer life	◆ Cost effective filtration with optimized yields
◆ 300°F high temperature option	◆ Choice of temperature compatible options	◆ Inventory one product for many applications
◆ No metal or plastic cores	◆ Easy disposal,suitable for incineration or shredding	◆ Disposal cost reduction
◆ Available with polypropylene or polyester end modifications	◆ Retrofit any industrial housing	◆ Usable in existing filter housings

Beta-Klean - The Clear Solution

Cuno continues an 80 year tradition of innovative cost effective solutions to challenging industrial filtration applications with Beta-Klean. Beta-Klean is a truly absolute rated, rigid (non-compressible) resin bonded filter cartridge.

Consistent quality and performance at absolute ratings from 5 to 70 µm make Beta-Klean the clear choice in the confusing world of **indistinguishable "me-too" cartridge filters.**

Consistent Performance

Absolute rated rigid structure Beta-Klean provides consistent performance. Unlike many competitors, Beta-Klean does not unload or lose filtration efficiency throughout its usable life!

Significant Life Advantage

Beta-Klean's rigid graded density grooved structure provides a significant life advantage over the competition!

CUNO provides quality solutions worldwide for the most challenging filtration applications. CUNO filtration systems include clarifying filters, pre-filters, final filters, stainless steel housings and engineered skid-mounted systems designed and sized for specific applications.

What is Beta-Klean?

Beta-Klean is a rigid, graded-density filter cartridge constructed primarily of acrylic fibers, cellulose fibers, and a tough chemically resistant thermosetting resin. The proprietary manufacturing process results in more fibers towards the center core region creating a graded-density structure. The thermosetting resin "bonds" the fibers into a permanent rigid matrix. Beta-Klean cartridges are grooved to significantly increase the surface area and extend the service life. Beta-Klean is manufactured and tested to deliver quality, consistency, and absolute cost effective filtration performance. Cuno's in-process quality assurance provides the control that results in consistent cartridges with defined absolute ratings time-after-time-after-time.

Absolute Beta-Klean

Absolute Beta-Klean removal ratings are determined for the entire cartridge life using a new filter performance test developed by CUNO that complies with the general procedure outlined in ASTM 975. A copy of Cuno's Technical Report summarizing absolute rating of Beta-Klean cartridges and the test methodology is available by requesting Cuno literature number LITTDMPC2.795.

Cuno defines Absolute Rating as " the particle size (x) providing an initial Beta Ratio (β_x) = 1000." At this Beta Ratio the removal efficiency is equal to 99.9%. Beta Ratio (β_x) is defined by the following equation:

$$\beta_x = \frac{\text{Cumulative Number of Particles Larger than x in the Influent Challenge}}{\text{Cumulative Number of Particles Larger than x in the Effluent}}$$

Beta-Klean filters achieve a minimum Beta$_x$ (β_x) value of 1000 at the specified ratings seen in Table 1.

GRADE DESIGNATION	B_x = 1000 (x = ABSOLUTE MICRON RATING)
ZB 050	5
ZB 070	7
ZB 100	10
ZB 140	14
ZB 150	15
ZB 200	20
ZB 300	30
ZB 400	40
ZB 500	50
ZB 700	70

TABLE 1. - BETA-KLEAN ABSOLUTE RATINGS

High Temperature Beta-Klean

Standard Beta-Klean provides consistent performance at temperatures to 250°F (121°C) and differential pressures to 70 psid (4.8 bar). High temperature (HT) Beta-Klean extends the temperature rating to 300°F (149°C) for those processes that require service under extreme conditions.

Rigid Graded-Density Beta-Klean

Rigid Graded-Density Beta-Klean

Beta-Klean filter cartridges are manufactured using an exclusive proprietary process that achieves a true "graded-density" fiber structure with a clean and smooth inside diameter. Each fiber is locked in this arrangement by a thermosetting resin binder to create a rigid structure, eliminating the need for a metal or plastic center core. Larger particles are trapped in the outer area and finer particles towards the inner area. Figure 1 illustrates how in a graded-density structure the overall effect is to classify and retain particles by size as they progress through the cartridge.

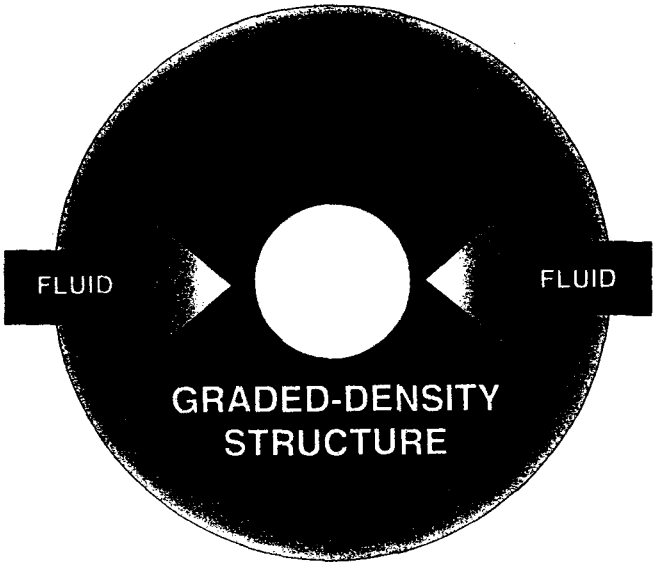

FIGURE 1. - BETA-KLEAN GRADED-DENSITY STRUCTURE

High Surface Area Beta-Klean

Beta-Klean cartridges also feature an optimized groove pattern that increases the surface area by over 65% when compared to smooth cylindrical cartridges (see Figure 2). The grooved surface prevents premature blinding of the outer surface by large particles and allows full utilization of the depth structure. Maximum surface area with a true graded-density structure means that Beta-Klean can provide **3 times or greater service life than competitive filter cartridges.**

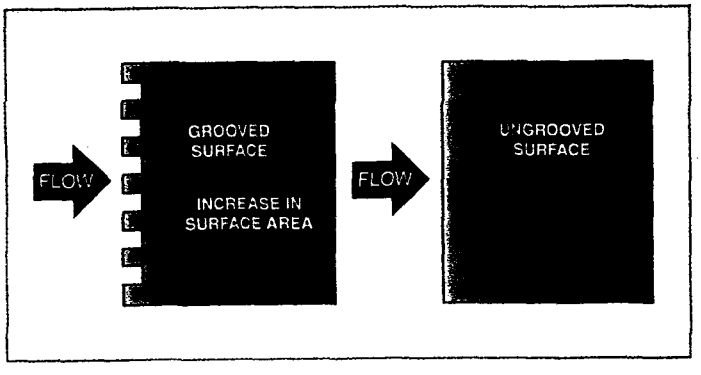

FIGURE 2. - SURFACE AREA COMPARISON

Beta-Klean Applications

Beta-Klean provides consistent reproducible filtration performance and longer life while meeting or exceeding quality specifications in a wide variety of industrial processing applications. Beta-Klean is particularly well suited for high viscosity fluids, high temperature processes, and differential pressures to 70 psid (4.8 bar).

Applications include:

- **Petroleum Products - gasoline, kerosene, lube oil, fuel oil, waxes**
- **Chemical/Petrochemical - acids, bases, organic solvents, catalysts, monomers, polymers, glycols**
- **Water - process water, produced water, boiler feed, demineralized feed, pre-reverse osmosis system, waste water**
- **General Industrial - paint, varnish, lacquer, inks, coatings, emulsions, magnetic media, resins, detergents, adhesives**
- **Brines and aqueous salt solutions**

Reproducible Cost Effective Filtration

Beta-Klean is manufactured to rigid specifications and subjected to stringent process and quality controls to ensure consistency in filtration performance and, ultimately, end-user process consistency - run after manufacturing run.

Beta-Klean Product Specifications

ABSOLUTE RATING (µm)	GRADE	FIBER	RESIN
5	Z8050	Acrylic/Glass/Cellulose	Phenolic
7	Z8070		
10	Z8100		
14	Z8140		
15	Z8150		
20	Z8200	Acrylic/Cellulose	Phenolic
30	Z8300		
40	Z8400		
50	Z8500		
70	Z8700		
Cartridge End Modifications			
Standard Temperature		Polypropylene bonding with polypropylene end modifications	
High Temperature		Thermoset epoxy bonding with polyester end modifications	
Operating Parameters			
Maximum Operating Temperature		Standard - 250°F (121°C) With polyethylene gasket - 200°F (93°C) With polypropylene end modifications - 180°F (82°C)	
		High Temperature Option - 300°F (149°C) with or without polyester end modifications	
Maximum Differential Pressure		70 psid (4.8 bar) @ 68°F (20°C)	
Recommended Change-out Differential Pressure		35 psid (2.4 bar)	
Dimensions			
Inside Diameter		1 1/16" (26.9 mm)	
Outside Diameter		2 19/32" (65.9 mm)	
Cartridge Length		9 3/4" through 40" (248 - 1016 mm)	

Beta-Klean - Providing Superior Performance

CARTRIDGE CROSS REFERENCE

The data in the following table was developed through extensive filter performance testing. The "Cuno Life Advantage" data is based on contaminant added values comparing filter elements of approximately equal efficiencies. The filtration efficiency/Beta Ratio performance of competitive "nominal rated" and many "absolute rated" filter cartridges vary greatly throughout their usable life (refer to Graphs 1 and 2).

Cartridge Manufacturer	Designation	Cartridge Type	Manufacturer Rating	Cuno Replacement	Cuno Absolute Rating (µm)	Cuno Life Advantage[1]
Commercial, Parker-Hannifin RBC	RBC 5	Resin bonded, coreless	5 Nominal	BKZ8300	30	1.5
	RBC 10		10 Nominal	BKZ8400	40	1.5
	RBC 25		25 Nominal	BKZ8500	50	1.5
	RBC 50		50 Nominal	BKZ8700	70	1.5
Filterite / Memtec - HIV	RPN XF	Resin bonded, coreless	1 Nominal	BKZ8200	20	1.5
	RPN 5		5 Nominal	BKZ8500	50	1.5
	RPN 10		10 Nominal	BKZ8500	50	2.0
	RPN 25		25 Nominal	BKZ8700	70	3.0
Pall Profile II	RM1F050	Melt-blown polypropylene wound on center core	5 Absolute	BKZ8050	5	1.5
	RM1F070		7 Absolute	BKZ8070	7	1.5
	RM1F100		10 Absolute	BKZ8100	10	2.0
	RM1F150		15 Absolute	BKZ8150	15	2.5
	RM1F200		20 Absolute	BKZ8200	20	2.5
	RM1F400		40 Absolute	BKZ8400	40	2.5
	RM1F700		70 Absolute	BKZ8700	70	1.5
	RM1F900		90 Absolute	BKZ8700	70	2.0
Selex / Osmonics	SXE -01	Melt-blown polypropylene, coreless	1 Not clearly defined	BKZ8050	5	3.0
	SXG-03 *		3 Not clearly defined	BKZ8070	7	2.5
	SXD -05		5 Not clearly defined	BKZ8100	10	3.0
	SXA -10 *		10 Not clearly defined	BKZ8140	14	2.5
	SXC -20		20 Not clearly defined	BKZ8300	30	3.0
	SXF-30 *		30 Not clearly defined	BKZ8400	40	2.5
Hytrex II / Osmonics	GX-01	Spun polypropylene fiber, coreless	1 Nominal	BKZ8200	20	2.0
	GX-03		3 Nominal	BKZ8300	30	3.0
	GX-05		5 Nominal	BKZ8300	30	2.5
	GX-10		10 Nominal	BKZ8400	40	2.5
	GX-20		20 Nominal	BKZ8500	50	2.5
	GX-50		50 Nominal	BKZ8700	70	3.0
Generic Wounds (Cotton)	03 µm	String wound on center core	3 Nominal	BKZ8100	10	2.0
	05 µm		5 Nominal	BKZ8150	15	2.0
	10 µm		10 Nominal	BKZ8200	20	2.0
	25 µm		25 Nominal	BKZ8300	30	2.0
	50 µm		50 Nominal	BKZ8700	70	2.5
	75 µm		75 Nominal	❑	❑	❑

[1] Life advantage is determined from laboratory performance tests at 3 gpm/EQSL.

* Extrapolation from literature.

❑ Insignificant Beta Ratio for 70 µm particles.

Beta-Klean Flow Rates

Table 2 provides flow information for Beta-Klean in aqueous fluids.

GRADE	ABSOLUTE RATING (µm)	SPECIFIC PRESSURE DROP PER 10" CARTRIDGE[1]		RECOMMENDED MAXIMUM AQUEOUS FLOW RATE[2] PER 10" CARTRIDGE	
		psi/gpm	mbar/lpm	gpm	lpm
Z8 050	5	0.75	13.6	3	11.4
Z8 070	7	0.33	5.98	3	11.4
Z8 100	10	0.20	3.64	4	15.1
Z8 140	14	0.16	2.89	4	15.1
Z8 150	15	0.27	4.88	4	15.1
Z8 200	20	0.13	2.34	5	18.9
Z8 300	30	0.08	1.44	5	18.9
Z8 400	40	0.06	1.10	6	22.7
Z8 500	50	0.05	0.89	7	26.5
Z8 700	70	0.03	0.55	7	26.5

[1] Specific aqueous pressure drop at ambient temperature for a single equivalent 10" cartridge. For multiple cartridge lengths, divide total flow by the number of single length equivalents.

[2] Optimal efficiency and life is achieved at aqueous flow rates less than the maximum flow indicated.

TABLE 2. BETA-KLEAN FLOW RATES

For liquids other than water, multiply the specific pressure drop value (in column 3) by the viscosity in centipoise. The specific pressure drop values may be effectively used when three of the four variables (Viscosity, Flow, Differential Pressure, and Cartridge Grade) are set.

Examples Of Flow Or psid Calculations

Example 1: Determine the initial pressure drop for water flowing at 15 gpm per 30" (Z8300) 30 µm cartridge

Fluid = water (1centipoise)
Flow = 15 gpm
Flow per 10" cartridge = 15 ÷ 3 = 5 gpm (equal to rec. max. flow)
Specific pressure drop from column 3 of Table 2 = 0.08 psi/gpm
Calculate: 0.08 x 5 = 0.4 psi initial pressure drop for the 30" cartridge

Example 2: Determine the oil flow rate at an initial pressure drop of 2.0 psi per 10" (Z8500) 50 µm cartridge

Fluid = 100 centipoise oil
Initial differential pressure = 2.0 psi
Specific pressure drop from column 3 of Table 2 = 0.05 psi/gpm
Multiply psi/gpm x viscosity in centipoise = 0.05 x 100 = 5 psi/gpm per 10" cartridge
Calculate: 2.0 (psi) ÷ 5 (psi/gpm per 10" cartridge) = 0.4 gpm per 10" cartridge in 100 centipoise oil

Beta-Klean - Ease of Use

Waste Management

Beta-Klean filter cartridges contain no metal or plastic cores. They can be incinerated, shredded, or crushed after use to reduce overall disposal costs. For more information about Beta-Klean disposal, refer to Cuno literature GF.TD2.

Beta-Klean Chemical Compatibility

Table 3 shows Beta-Klean's wide range of chemical compatibility. Beta-Klean exhibits excellent resistance to petroleum products, organic solvents, water, acids, brines and aqueous salt solutions. Beta-Klean is not recommended for strong acids or bases at temperatures over 100°F (38°C).

FLUID		RATING
CATEGORY	EXAMPLE	
Petroleum	Gasoline	R
	Kerosene	R
	Diesel Fuel	R
	Lube Oil	R
	Fuel Oil	R
	Waxes	R
Organic Solvents	MEK	R
	Benzene	R
	Toluene	R
	Xylene	R
	Alcohols	R
	Glycols	R
	Dimethyl Formamide (DMF)	N
	Amines (DEA, MDEA, MEA) 20% - 50% up to 160°F (71°C)	L
Water	Process	R
	Produced	R
	Boiler Feed	R
	Demineralizer Feed	R
	Potable Water	N
	WFI	N
Organic Acids	Acetic (100%)	R
	Tannic 10%	R
Inorganic Acids	Hydrochloric (Muriatic) Acid 5%	R
	Sulfuric 50%	R
	Sulfurous 5-10%	R
	Nitric	R
Brines and Aqueous Salt Solutions	Sodium Chloride	R
	Sodium Sulfate	R
	Sodium Nitrate	R
Weak Alkalis	Aluminum Hydroxide	R
	Ferric Hydroxide	R
	Magnesium Hydroxide	R
Fatty Acids - Oils	Detergents	R
	Mineral Oil	R
	Industrial Vegetable Oils	R
	Silicone Oils	R
Oxidizers	Hydrogen Peroxide 90%	R
R = Generally Recommended up to 250°F (121°C) unless otherwise noted.		
N = Not Recommended		
L = Likely Compatible, test before use.		

TABLE 3. - CHEMICAL COMPATIBILITY

The data presented in Table 3 is for general guidance only. Testing under specific application conditions is recommended. For various end modifications and multi-length cartridges, consult your local distributor or Cuno. Refer to Cuno publication GF.G02.788 for additional information.

INDUSTRIAL HOUSING SELECTION GUIDE					
FILTER HOUSING MODEL	CTG. HEIGHTS	NUMBER OF CARTRIDGES *	INLET/OUTLET	MAXIMUM AQUEOUS FLOW RATE **	
				gpm	lpm
1BD1	1 x 9 3/4"	2	1/2" NPT	8 1/2	36
1BD2	2 x 9 3/4"	4			
1WTS1	1 x 9 3/4"	1			
1WTS2	1 x 19 1/2"	2			
1B1, 1M1, CT 101	1 x 9 3/4"	1	3/4" NPT	16	61
1B2, 1M2, CT 102	1 x 19 1/2"	2			
1BD1	1 x 9 3/4"	2	1" NPT	27	102
1BD2	2 x 9 3/4"	4			
CT 101, 1H	1 x 9 3/4"	1			
CT 102	1 x 19 1/2"	2			
CT 103	1 x 29 1/4"	3			
3WTS1	3 x 9 3/4"	3			
3WTS2	3 x 19 1/2"	6			
3WTS3	3 x 29 1/4"	9			
7WTS1	7 x 9 3/4"	7	1 1/4" NPT	47	178
7WTS2	7 x 19 1/2"	14			
7WTS3	7 x 29 1/4"	21			
3AL1	3 x 9 3/4"	3	1 1/2" NPT	63 1/2	240
3AL2	3 x 19 1/2"	6			
3AL3	3 x 29 1/4"	9			
4DC1	4 x 9 3/4"	4			
5DC1	5 x 9 3/4"	5			
4DC2	4 x 19 1/2"	8	2" NPT	100	397
4DC3	4 x 29 1/4"	12			
5SD1	5 x 9 3/4"	5			
5SD2, 5DC2, 5VC2	5 x 19 1/2"	10			
5SD3, 5 DC3, 5VC3	5 x 29 1/4"	15			
5SD4, 5DC4	5 x 39"	20			
6AL1	6 x 9 3/4"	6			
6AL2	6 x 19 1/2"	12			
6AL3	6 x 29 1/4"	18			
7PC1	7 x 9 3/4"	7			
7PC2	7 x 19 1/2"	14			
FL08	6 x 9 3/4"	6	2" FLANGE	100	397
	6 x 19 1/2"	12			
	6 x 29 1/4"	18			
	6 x 39"	24			
PL08	6 x 29 1/4"	18			
12DC2, 12SD2	12 x 19 1/2"	24	3" FLANGE	220	833
12SD3, 12SD3	12 x 29 1/4"	36			
12SD4	12 x 39"	48			
FL12	12 x 19 1/2"	24			
	12 x 29 1/4"	36			
	12 x 39"	48			
PL12	12 x 29 1/4"	36			
22SD3/22DC3	22 x 29 1/4"	66	4" FLANGE	380	1440
22SD4/22DC4	22 x 39"	88			
FL14	18 x 29 1/4"	54			
	18 x 39"	72			
PL14	18 x 29 1/4"	54			
FL16	24 x 29 1/4"	72	6" FLANGE	870	3290
	24 x 39"	96			
PL16	24 x 29 1/4"	72			
FL20	36 x 29 1/4"	108			
	36 x 39"	144			
PL20	36 x 29 1/4"	108			
FL24	52 x 29 1/4"	156			
	52 x 39"	208			
PL24	52 x 29 1/4"	156			
FL30	85 x 29 1/4"	255	8" FLANGE	1500	5680
	85 x 39"	340			
PL30	85 x 29 1/4"	255			
* Equivalent single length cartridges ** Based on 10 FPS housing velocity. In most cases, the filter cartridge dictates system flow and pressure drop.					

TABLE 4. - INDUSTRIAL HOUSING SELECTION GUIDE

Industrial Filter Housings

Cuno manufactures a full line (see Table 4 on opposite page) of Beta-Klean compatible standard filter housings to meet most application requirements. Models are available for both air and liquid in a wide range of construction materials, from plastics to ASME Code with 316L stainless steel, to suit a variety of application needs. For more information about CUNO filter housings, consult your local CUNO distributor and ask for the literature listed below.

PL Series (LITHSPL1)
- Available in a wide variety of standard industrial designs
- ASME Code
- Choice of carbon steel or 304 stainless steel

SD Housings (LITHSSD1)
- Available in a variety of sizes
- Accepts both single and double open end cartridges

CT Series (LITHSCT3)
- Available in a variety of sizes and materials
- Mounting bracket available

AL Series (LITHSAL1)
- Rugged economical design in cast iron and steel
- Easy assembly

CTG-Klean® (LITHSCK1)
- Enclosed System
- Uses disposable filter pack
- Easy to use - housing clean-up eliminated

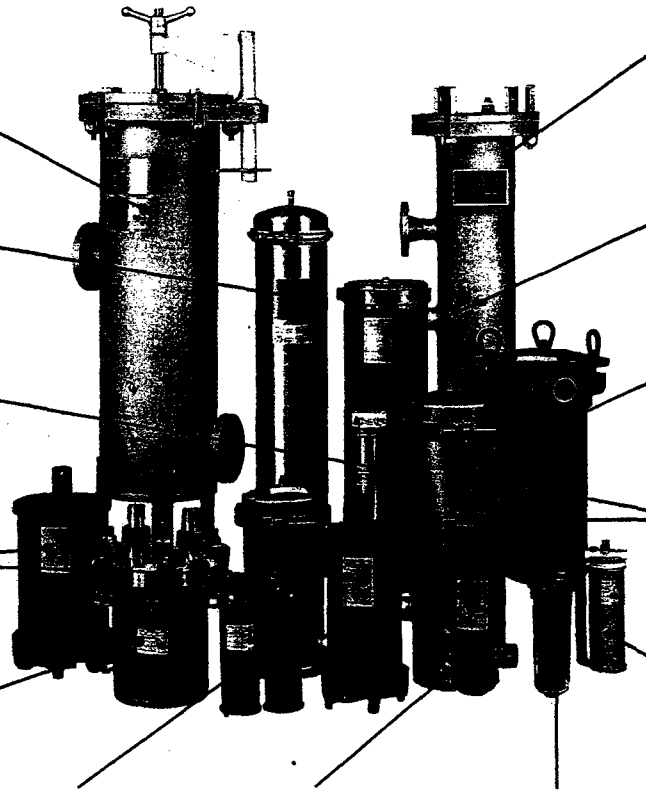

Flex Line® (LITHSFL1)
- Maximum design flexibility for a wide variety of system requirements
- ASME Code
- Choice of carbon steel or 316L stainless steel

VC Series (LITHSVC1)
- Polyvinylchloride construction
- Available for 2 or 3 high cartridges

PC Housings (LITHSPC1)
- Features a removable cartridge pack for rapid change-out and easy cleaning
- ASME Code

DC Series (LITHSDC1)
- Available in a wide variety of sizes
- 304 stainless steel construction

1B Housing (LITHS1B1)
- Available in cast iron and steel, or 304 stainless steel
- Choice of 1 or 2 high cartridge models

1BD Housing (LITHSBD1)
- Available in cast iron and steel, or 304 stainless steel
- Built-in valve for duplex or single operation

1H Housing (LITHS1H1)
- Ideal for high pressure applications
- Durable steel construction

1M Housing (LITHS1M1)
- Lightweight plastic construction
- Choice of 1 or 2 high cartridge models

EXAMPLE USING TABLES 2 AND 4 FOR FILTER SIZING

Table 2 (BETA-KLEAN FLOW RATES) and Table 4 (INDUSTRIAL HOUSING SELECTION GUIDE) can be used to determine the appropriate size housing for use with your system. After selecting the filter cartridge and calulating the number of equivalent single length (EQSL) cartridges required to achieve the desired flow and pressure drop, use Table 4 to select the housing suited to your process. Note: In most cases, the filter cartridge dictates system flow and pressure drop.

Example: Calculate Flow per EQSL and select housing

Process Parameters:
- FLUID: Water
- FLOW: 140 gpm
- FILTRATION REQUIRED: 10 µm ABSOLUTE
- PER CARTRIDGE PRESSURE DROP REQUIRED: ≤ 1.0 psi

STEP 1. From Table 2, a Z8100 (10µm) Beta-Klean gives 4 gpm/cartridge maximum recommended flow and a specific pressure drop of 0.2 psi/gpm for each 10" cartridge.

STEP 2. At 4 gpm/cartridge, the initial pressure drop will be:

4 x 0.2 = 0.8 psi

This is well within the specified limit of 1 psi. Therefore:

140 gpm ÷ 4gpm/EQSL = 35 EQSL

A total of 35 EQSL (35 x 10", 18 x 20", 12 x 30", or 9 x 40" cartridges) will meet the suggested 4 gpm/EQSL flow rate

STEP 3. From Table 4, a FL12 housing holds 12 (30") cartridges and will easily accommodate the 140 gpm system flow. (Other housings listed in Table 4 will also meet these requirements.)

Beta-Klean Ordering Guide

CTG. TYPE	LENGTH*	GRADE	SURFACE	PACKAGING **	TEMPERATURE OPTION	END MODIFICATION	GASKET/O-RING
BK - BETA-KLEAN	09 - 9 ¾" 10 - 10" 19 - 19 ½" 20 - 20" 29 - 29 ¼ 30 - 30" 39 - 39" 40 - 40"	Z8050 Z8070 Z8100 Z8140 Z8150 Z8200 Z8300 Z8400 Z8500 Z8700	G - GROOVED U - UNGROOVED	1 - STANDARD SHRINK WRAP 2 - BULK PACK	S - STANDARD H - HIGH TEMP.	C - 222 O-RING & SPEAR F - 222 O-RING & FLAT CAP K - 222 O-RING, RETAINING CLIP & FLAT CAP N - NONE P - POLYPROPYLENE CORE EXTENDER S - SS CORE EXTENDER	A - SILICONE B - FLUOROCARBON C - EPR D - NITRILE G - VOLARA GASKET*** N - NONE

** Lengths are multiples of either 9 3/4" or 10". ** All 39" and 40" cartridges poly bagged. ***Required for grades Z8050 through Z8140*

Notes on End Modification Ordering

Double Open-End (DOE) Cartridges

DOE without end modification or gasket: N - N

DOE with flat gasket: N - G

Single Open-End (SOE) O-Ring Style End Modifications

C - Code 8 style end modification (222) double o-ring connector with locating spear for use with standard plug-in style housing diaphragms and positioning plates.

F - Code 3 style end modification (222) double o-ring connector with flat cap for use with standard plug-in style housing.

K - 222 style o-ring connector with one o-ring and retaining clip for use with the 7PC housing

Core Extenders - For proper alignment and cartridge centering in competitive housings

P - Polypropylene extender for applications where compatible

S - Stainless Steel extender for chemical compatibility and for high temperatures > 180°F (82°C)

Applications Support - SASS

Cuno's Scientific Applications Support Services (SASS) is staffed by scientists and engineers, with state-of-the-art laboratory facilities. The SASS staff, familiar with a wide range of filtration and separation applications, work closely with the customer to recommend the most effective and economical Cuno filtration systems.

WARRANTY

Seller warrants its equipment against defects in workmanship and material for a period of 12 months from date of shipment from the factory under normal use and service and otherwise when such equipment is used in accordance with instructions furnished by Seller and for purposes disclosed in writing at the time of purchase, if any. Any unauthorized alteration or modification of the equipment by Buyer will void this warranty. Seller's liability under this warranty shall be limited to the replacement or repair, F.O.B. point of manufacture, of any defective equipment or part which, having been returned to the factory, transportation charges prepaid, has been inspected and determined by the Seller to be defective. THIS WARRANTY IS IN LIEU OF ANY OTHER WARRANTY, EITHER EXPRESSED OR IMPLIED, AS TO DESCRIPTION, QUALITY, MERCHANTABILITY, FITNESS FOR ANY PARTICULAR PURPOSE OR USE, OR ANY OTHER MATTER. Under no circumstances shall Seller be liable to Buyer or any third party for any loss of profits or other direct or indirect costs, expenses, losses or consequential damages arising out of or as a result of any defects in or failure of its products or any part or parts thereof or arising out of or as a result of parts or components incorporated in Seller's equipment but not supplied by the Seller.

Your Local CUNO Distributor:

Service Worldwide

CUNO®

Fluid Purification

Cuno Incorporated
400 Research Parkway
Meriden, CT 06450, U.S.A.
Tele: (203) 237-5541
Fax: (203) 238-8977

CUNO Pacific Pty., Ltd.
140 Sunnyholt Road
Blacktown, N.S.W. 2148
Australia

CUNO Filtration Asia Pte. Ltd.
1 Tech Park Crescent
Singapore 638131

CUNO Europe S.A.
Chemin Du Contre Halage
62730 - Les Attaques
France

CUNO Srl
Via Tonale n°3
20037 Paderno Dugnano
Italy

CUNOGmbH
Wilhl-Th-Römheld - Str. 32
55130 Mainz
Germany

CUNO K.K.
Hodogaya Station
Building 6F
1-7 Iwai-cho, Hodagaya-ku
Yokohama 240 Japan

CUNO Latina Ltda.
Rua Amf Do Brasil 251
18120 Makinque-Sp
Brazil

© Copyright CUNO Incorporated, 1995 - All Rights Reserved

LIQUID PHASE GAC SYSTEM (LC-501/502/503)

CALGON

MODEL 10 ADSORPTION SYSTEM

ACTIVATED CARBON PRODUCT BULLETIN

DESCRIPTION

The Calgon Model 10 Adsorption System has been designed for the removal of soluble organic chemical contaminants from water or wastewater using granular activated carbon products. The system is particularly suitable for applications with low levels of organic contaminants or with flow rates up to 700 gallons per minute per vessel.

The Model 10 unit is a complete water treatment system, skid mounted for ease of installation, and is provided with piping for series or parallel operation. The skid feature allows rapid installation because only the steel skid must be attached to a foundation, while the adsorption vessels and piping are then attached to their proper location on the steel framework.

The Model 10 system is provided with pre-assembled piping sections for influent and treated water, utility water and compressed air, carbon transfer and venting operations. Water and utility piping need only be brought to the Model 10 and connected to complete the installation of the treatment process.

The Model 10 adsorber vessels are ASME coded for 75 psig, lined for corrosion resistance and are designed to contain 20,000 lbs of Calgon Carbon's granular activated carbon. Carbon transfer piping allows use of Calgon Carbon's convenient carbon service including special transfer trailers. At a flow rate of 350 gpm, each adsorber provides 15 minutes contact time.

Your Calgon Carbon Technical Sales Representative can help you evaluate the suitability of the Model 10 to satisfy your requirements. If needed, adsorption evaluation tests or studies to determine applicability and economics can be arranged. Calgon Carbon offers adsorption equipment in many other sizes, and carbon supply and exchange services to meet your particular needs.

FEATURES

- Proven design—downflow fixed bed adsorption.
- Pre-engineered package—simple and quick installation.
- ASME code vessels compatible with Calgon Carbon Service.
- Vinyl Ester Resin lined vessels suitable for potable water.
- Pipe sizes are designed for the flow rate desired.
- Distributor underdrain for even distribution.
- Manway for maintenance access.
- Backwash capability can be added if suspended solids are present.
- Designed to minimize operating labor and avoid manual handling of carbon.
- Designed for complete removal of exhausted carbon to minimize problems with contaminated material remaining in vessel.
- Capable of bulk carbon filling and removal.
- Granular activated carbon fill and discharge piping.

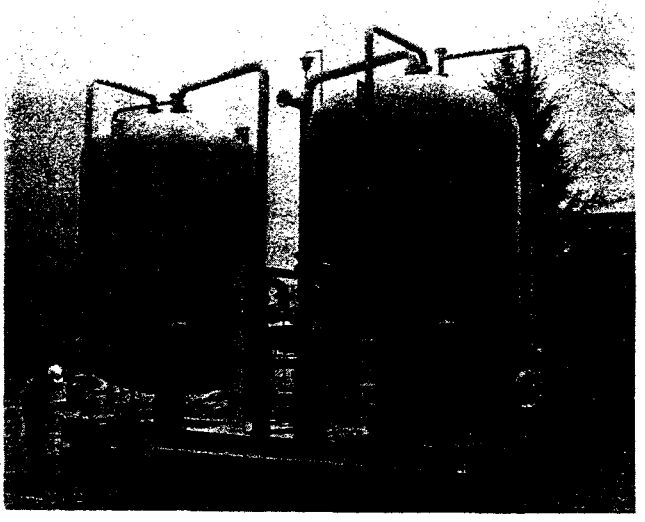

AVAILABLE AUXILIARY SERVICES

- Calgon Carbon Service

OPTIONAL OPERATION MODES

- Downflow fixed bed or
  Downflow fixed bed with backwash capability.
- Series or Parallel flow.

SPECIFICATIONS

Vessel Diameter:	10 ft
ASME Code:	Design 75 PSIG @ 150° F (higher pressure vessel ratings available)
Pipe Connections:	Process pipe: Sized per flow rate; flange connection std. Water pipe: 1-1/2-inch flange
Carbon Volume per Vessel:	715 cu.ft. (nominal 20,000 lbs-granular activated carbon)
Weight:	Empty—38,000 lbs.; Operating—230,000 lbs.
Pressure Relief:	72 PSIG nominal setting
Backwash Rate:	1000 GPM (if required)
Transfer Mode:	Air pressurized slurry transfer

TYPICAL FLOW RATES AND CONTACT TIME

Series Operation		Parallel Operation	
GPM	Contact Time Minutes	GPM	Contact Time Minutes
350	30	700	15

NOTE: Smaller Calgon Carbon Service Systems are available for smaller flow rates and lower carbon usage applications.

© Calgon Carbon Corporation 10/89

MATERIALS OF CONSTRUCTION AND AVAILABLE OPTIONS

- Vessel Lining: Vinyl Ester coating (nominal 40 mil) suitable for potable water and most wastewater applications.
- Piping and Valves: Carbon steel piping and cast iron butterfly valves (process) and stainless steel ball valves (carbon transfer).
- Optional flanged polypropylene lined piping with diaphram valves for process water.
- Underdrain Collection System: Polypropylene slotted nozzles.
- External Coating: Epoxy Mastic Coating
- Optional polyurethane coating system for more corrosive environments.

CAUTION

Wet activated carbon preferentially removes oxygen from the air. In closed or partially closed containers and vessels, oxygen depletion may reach hazardous levels. If workers are to enter a vessel containing carbon, appropriate sampling and work procedures for potentially low-oxygen spaces should be followed, including all applicable Federal and State requirements.

For information regarding human and environmental exposure, call (412) 787-6700 and request to speak to Regulatory and Trade Affairs.

Calgon Carbon Corporation reserves the right to change specifications without notice for components of equal quality.

For additional information, contact Calgon Carbon Corporation, Box 717, Pittsburgh, PA 15230-0717 Phone (412) 787-6700

CALGON

CALGON CARBON CORPORATION

Printed in U.S.A.

CALGON
CALGON CARBON CORPORATION

MODEL 10
MODULAR CARBON ADSORPTION SYSTEM

DESCRIPTION

The Calgon Carbon Model 10 is an adsorption system designed for the removal of dissolved organic contaminants from liquids using granular activated carbon. The modular design concept allows selection of options or alternate materials to best meet the requirements of the site and treatment application.

The Model 10 system is delivered as two adsorbers and a compact center piping network, requiring only minimal field assembly and site connections. An optional mounting skid is available to facilitate installation. The pre-engineered Model 10 design assures that all adsorption system functions can be performed with the provided equipment.

The process piping network for the Model 10 accommodates operation of the adsorbers in parallel or series (with either adsorber placed in first stage). The piping can also isolate either adsorber from the flow. This permits carbon exchange or backwash operations to be performed on one adsorber without interrupting treatment.

The unique internal cone under-drain design provides for the efficient collection of treated water and the distribution of backwash water. The internal cone also insures efficient and complete discharge of spent carbon from the adsorber. The Model 10 system is designed for use with Calgon Carbon's closed loop carbon exchange service. Using special designed trailers, spent carbon is removed from the adsorbers and returned to Calgon Carbon for reactivation. The trailers also recharge the adsorbers with fresh activated carbon.

SYSTEM SPECIFICATIONS

Carbon adsorbers:

- Carbon steel ASME code pressure vessels.
- Internal vinyl ester lining (nominal 35 mil) where GAC contacts steel, for potable water and most liquid applications.
- Polypropylene slotted nozzles for water collection and backwash distribution.

Standard adsorption system piping:

- Schedule 40 carbon steel process piping with cast iron fittings.
- Cast iron butterfly valves for process piping.
- PPL lined steel pipe for GAC discharge.
- Full bore stainless steel ball valves for GAC fill and discharge.

System external coating:

- Epoxy mastic paint system

Available options:

- Unifying system skid.

- In-bed water sample collection probes.

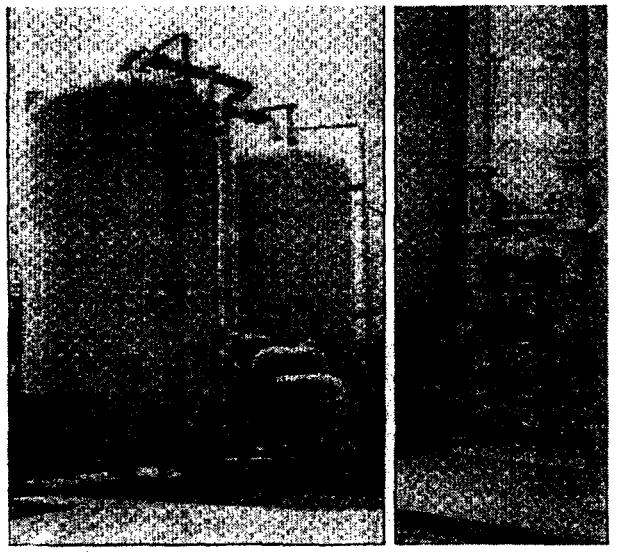

OPERATING CONDITIONS

Carbon per adsorber:	20,000 lbs. (9080 kg)
Pressure rating:	125 psig (862 kPa)
Pressure relief:	Graphite rupture disk (94 psig)
Vacuum rating:	14 psig
Temperature rating:	150°F maximum (65°C)
Backwash rate:	Typical 1000 gpm (30% expansion)
Carbon transfer:	Air pressure slurry transfer
Utility air:	100 scfm at 30 psig (reduce to 15 psig for trailer)
Utility water:	100 gpm at 30 psig
Freeze protection:	None provided; enclosure or protection recommended

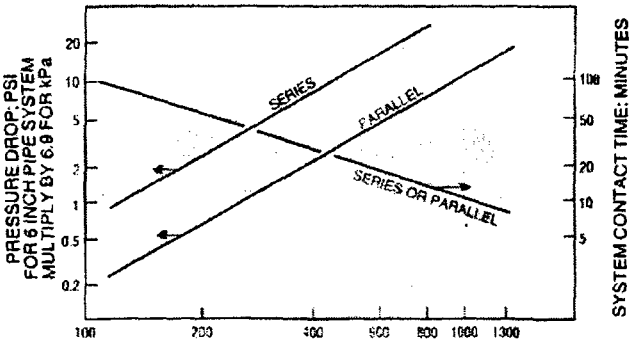

TOTAL FLOW TO SYSTEM; GPM
WATER AT 60°F
MULTIPLY BY 0.227 FOR M^3/HR

DIMENSIONS AND FIELD CONNECTIONS

Adsorber vessel diameter:	10 ft. (3050 mm)
Process Pipe:	6 in. or 8 in.
Process Pipe connection:	125# ANSI flange
Utility water connection:	3/4 in. hose connection
Utility air connection:	3/4 in. hose connection
Carbon hose connection:	4 in. Kamlock type
Carbon dry fill:	top 8" nozzle
Backwash connections:	6 in. or 8 in. flange
Drain/vent connection:	6 in. or 8 in. flange
Adsorber maintenance access....	20 in. round flanged man-way, 14 in. x 18 in. man-way below cone
Adsorber shipping weight:	18,500 lbs. (empty) (8400 kg)
System operating weight:	215,000 lbs. (97,610 kg)

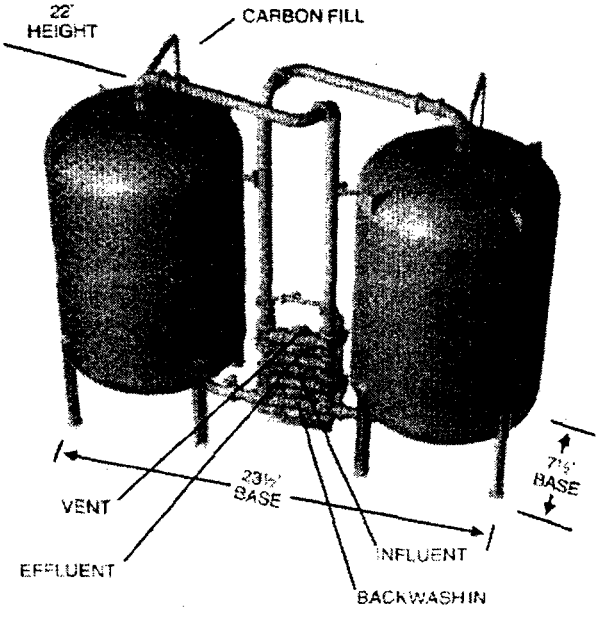

Model 10 Adsorption System

CAUTION

Wet activated carbon preferentially removes oxygen from air. In closed or partially closed containers and vessels, oxygen depletion may reach hazardous levels. If workers are to enter a vessel containing carbon, appropriate sampling and work procedures for potentially low-oxygen spaces should be followed, including all applicable federal and state requirements.

SAFETY MESSAGE

Wet activated carbon preferentially removes oxygen from air. In closed or partially closed containers and vessels, oxygen depletion may reach hazardous levels. If workers are to enter a vessel containing carbon, appropriate sampling and work procedures for potentially low oxygen spaces should be followed, including all applicable federal and state requirements.

1-800-4-CARBON

www.calgoncarbon.com

Domestic Sales Offices

East Coast Region

West Coast and Rockies Region
Monterey, CA 93940-5372
Tel (831) 656-1650
Fax (831) 656-1656

International Sales Offices

Australasia / Philippines / Southeast Asia
Calgon Carbon Asia
Singapore Office

Europe
Chemviron Carbon
Zoning Industriel de Feluy
B-7181 Feluy, Belgium

Flemington, NJ 08822-5712
Tel (908) 237-4600
Fax (908) 237-4646

Midwest Region
Pittsburgh, PA
Tel (412) 787-6700
1-800-4-CARBON
Fax (412) 787-6676

Gulf Coast Region
Houston, TX 77092-8815
Tel (713) 690-2000
(713) 686-9690
Fax (713) 690-7909

Tel (65) 221-3500
Fax (65) 221-3554

Tel 32 64 51 18 11
Fax 32 64 54 15 91

Canada
Calgon Carbon Canada, Inc.
Bolton, Ontario
Tel (905) 857-9915
Fax (905) 857-9984

China / Korea / Taiwan
Calgon Carbon Asia
Tokyo Office
Tel 81 3 3560 7505
Fax 81 3 3584 7202

Japan
Calgon Far East
Tokyo Office
Tel 81 3 3582 1861
Fax 81 3 3586 9266

Latin America
Houston, TX 77092-8815
Tel (713) 690-2000
(713) 686-9690
Fax (713) 690-7909

CALGON

CALGON CARBON CORPORATION

Calgon Carbon Corporation's activated carbon products are continuously being improved and changes may *have taken place since this publication went to press.*

Copyright (c) 2000 - Calgon Carbon Corporation - All rights reserved.

CALGON

CALGON CARBON CORPORATION

SYSTEM BULLETIN

MODEL 10

MODULAR CARBON ADSORPTION SYSTEM

DESCRIPTION

The Calgon Carbon Model 10 is an adsorption system designed for the removal of dissolved organic contaminants from liquids using granular activated carbon. The modular design concept allows selection of options or alternate materials to best meet the requirements of the site and treatment application.

The Model 10 system is delivered as two adsorbers and a compact center piping network, requiring only minimal field assembly and site connections. An optional mounting skid is available to facilitate installation. The pre-engineered Model 10 design assures that all adsorption system functions can be performed with the provided equipment.

The process piping network for the Model 10 accommodates operation of the adsorbers in parallel or series (with either adsorber placed in first stage). The piping can also isolate either adsorber from the flow. This permits carbon exchange or backwash operations to be performed on one adsorber without interrupting treatment.

The unique internal cone underdrain design provides for the efficient collection of treated water and the distribution of backwash water. The internal cone also insures efficient and complete discharge of spent carbon from the adsorber. The Model 10 system is designed for use with Calgon Carbon's closed loop carbon exchange service. Using special designed trailers, spent carbon is removed from the adsorbers and returned to Calgon Carbon for reactivation. The trailers also recharge the adsorbers with fresh activated carbon.

SYSTEM SPECIFICATIONS

Carbon adsorbers:

- Carbon steel ASME code pressure vessels.
- Internal vinyl ester lining (nominal 35 mil) where GAC contacts steel, for potable water and most liquid applications.
- Polypropylene slotted nozzles for water collection and backwash distribution.

Standard adsorption system piping:

- Schedule 40 carbon steel process piping with cast iron fittings.
- Cast iron butterfly valves for process piping.
- PPL lined steel pipe for GAC discharge.
- Full bore stainless steel ball valves for GAC fill and discharge.

System external coating:

- Epoxy mastic paint system

Available options:

- Unifying system skid.
- In-bed water sample collection probes.

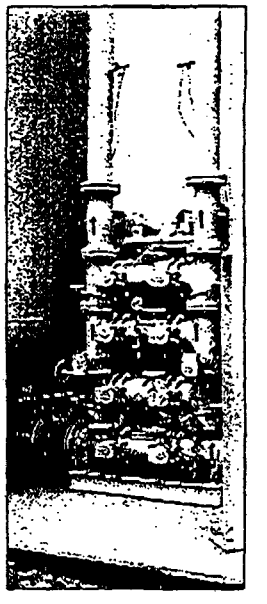

OPERATING CONDITIONS

Carbon per adsorber: ..... 20,000 lbs. (9080 kg)
Pressure rating: ..... 125 psig (862 kPa)
Pressure relief: ..... Graphite rupture disk (94 psig)
Vacuum rating: ..... 14 psig
Temperature rating: ..... 150°F maximum (65°C)
Backwash rate: ..... Typical 1000 gpm (30% expansion)
Carbon transfer: ..... Air pressure slurry transfer
Utility air: ..... 100 scfm at 30 psig (reduce to 15 psig for trailer)
Utility water: ..... 100 gpm at 30 psig
Freeze protection: ..... None provided; enclosure or protection recommended

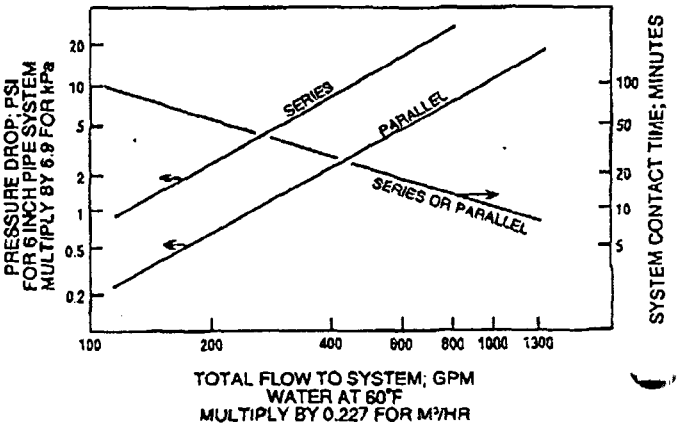

DIMENSIONS AND FIELD CONNECTIONS

Adsorber vessel diameter: ..... 10 ft (3050 mm)
Process Pipe: ..... 6 in. or 8 in.
Process Pipe connection: ..... 125# ANSI flange
Utility water connection: ..... ¾ in. hose connection
Utility air connection: ..... ¾ in. hose connection
Carbon hose connection: ..... 4 in. Kamlock type
Carbon dry fill: ..... top 8" nozzle
Backwash connections: ..... 6 in. or 8 in. flange
Drain/vent connection: ..... 6 in. or 8 in. flange
Adsorber maintenance access ..20 in. round flanged manway
14 in. x 18 in. manway below cone
Adsorber shipping weight ..... 18,500 lbs. (empty) (8400 kg)
System operating weight ..... 215,000 lbs. (97,610 kg)

CAUTION

Wet activated carbon preferentially removes oxygen from air. In closed or partially closed containers and vessels, oxygen depletion may reach hazardous levels. If workers are to enter a vessel containing carbon, appropriate sampling and work procedures for potentially low-oxygen spaces should be followed, including all applicable federal and state requirements.

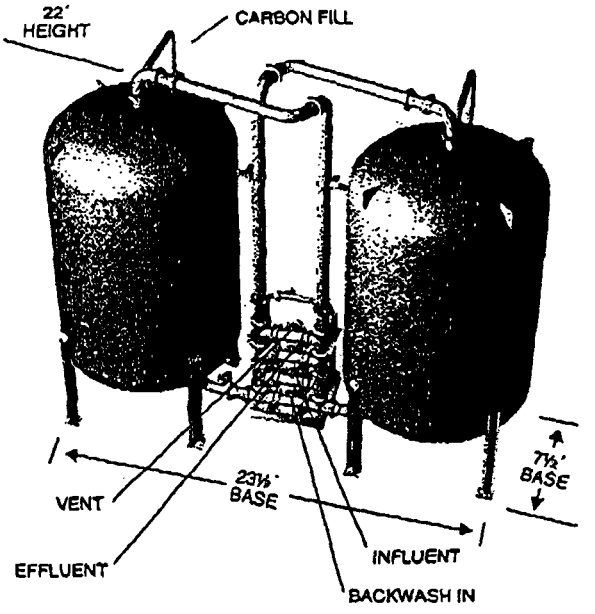

Model 10 Adsorption System

For detailed information on the products described in this bulletin, please contact one of our Regional Sales Offices located nearest to you:

Region I
Bridgewater, NJ
Tel (908) 526-4646
Fax (908) 526-2467

Region II
Pittsburgh, PA
Tel (412) 787-6700
800/4-CARBON
Fax (412) 787-6676

Region III
Lisle, IL
Tel (708) 505-1919
Fax (708) 505-1936

Latin America/Australasia/ Philippines
Pittsburgh, PA
Tel (412) 787-4519
Fax (412) 787-4523

Canada
Calgon Carbon Canada, Inc.
Mississauga, Ontario
Tel (905) 673-7137
Fax (905) 673-8883

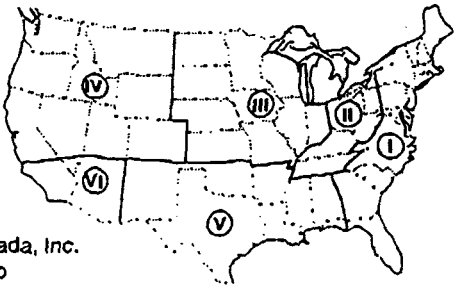

Singapore/Asia Pacific
Calgon Carbon Corp.
Tel (65) 221-3500
Fax (65) 221-3554

Europe
Chemviron Carbon
Brussels, Belgium
Tel 32 2 773 02 11
Fax 32 2 770 93 94

Region IV
Burlingame, CA
Tel (415) 548-2040
Fax (415) 344-2029

Region V
Houston, TX
Tel (713) 690-2000
Fax (713) 690-7909

Region VI
Carlsbad, CA
Tel (619) 431-5550
Fax (619) 431-8169

If at any time our products or services do not meet your requirements or expectations, or if you would like to suggest any ideas for improvement, please call us at 1-800-548-1999. From outside the U.S. please call +1-412-787-6700.

CALGON

CALGON CARBON CORPORATION

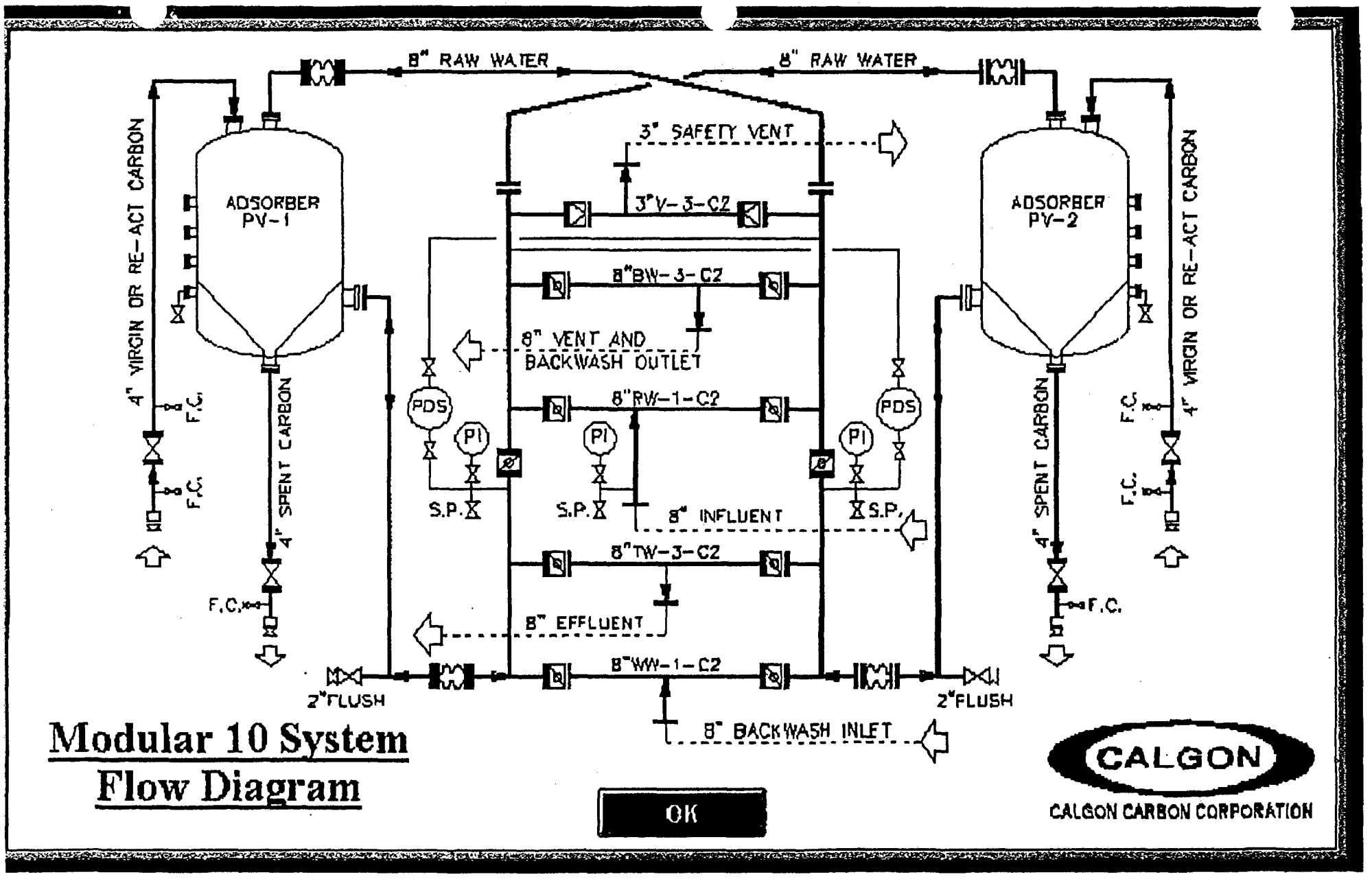

Modular 10 System Flow Diagram

OK

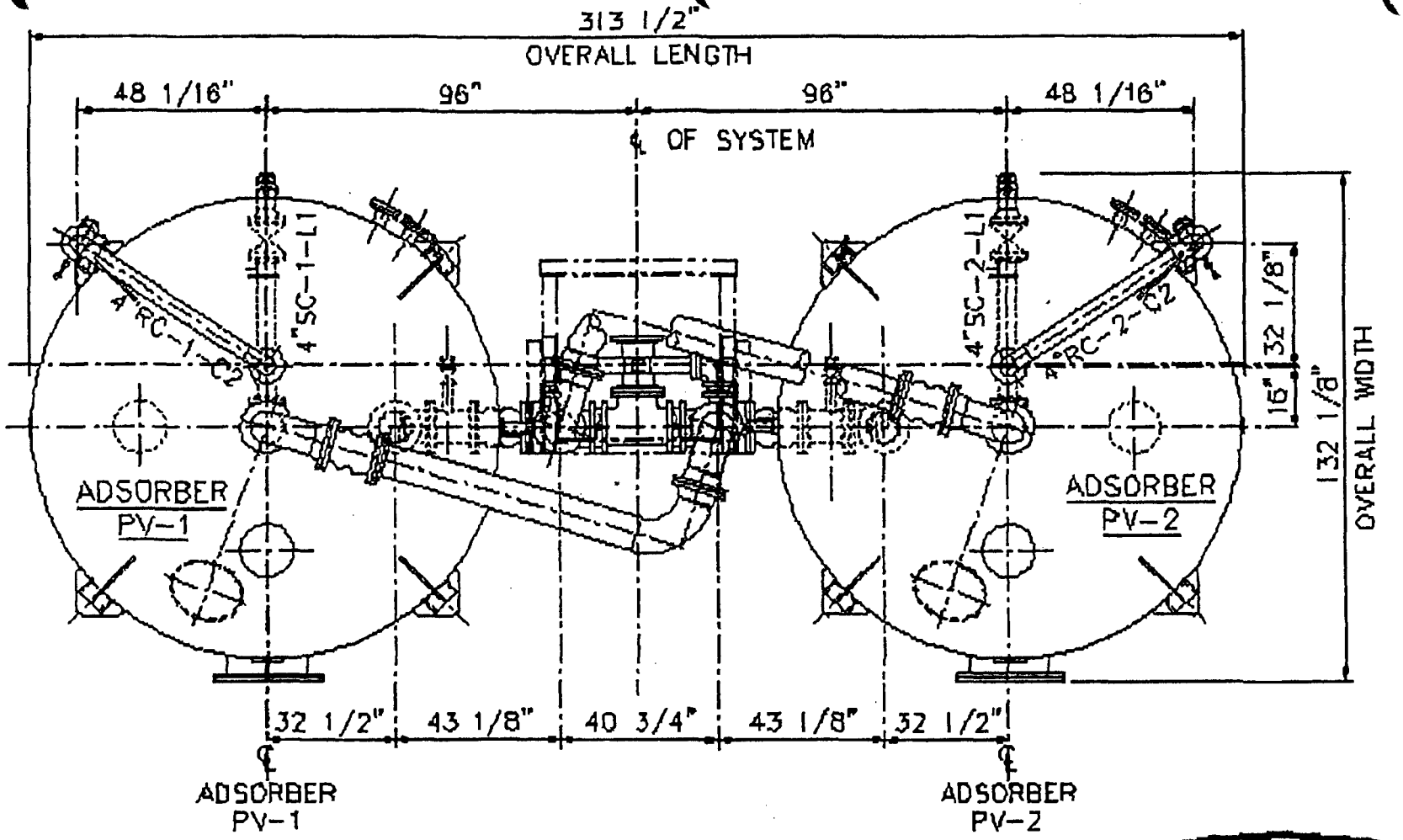

Modular 10 System
Plan View

OK

CALGON

CALGON CARBON CORPORATION

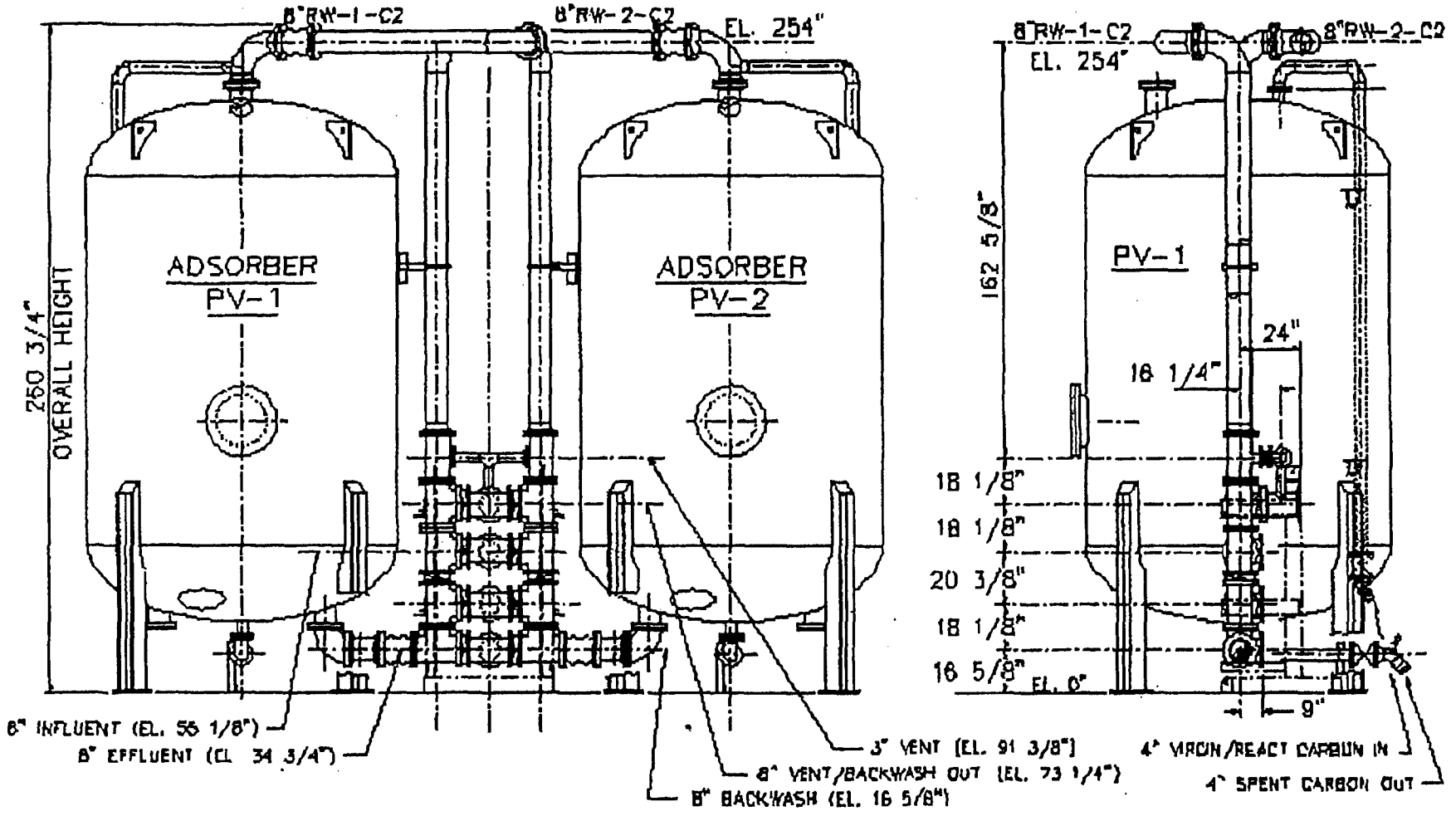

Modular 10 System
Elevation View

OK

CALGON

CALGON CARBON CORPORATION

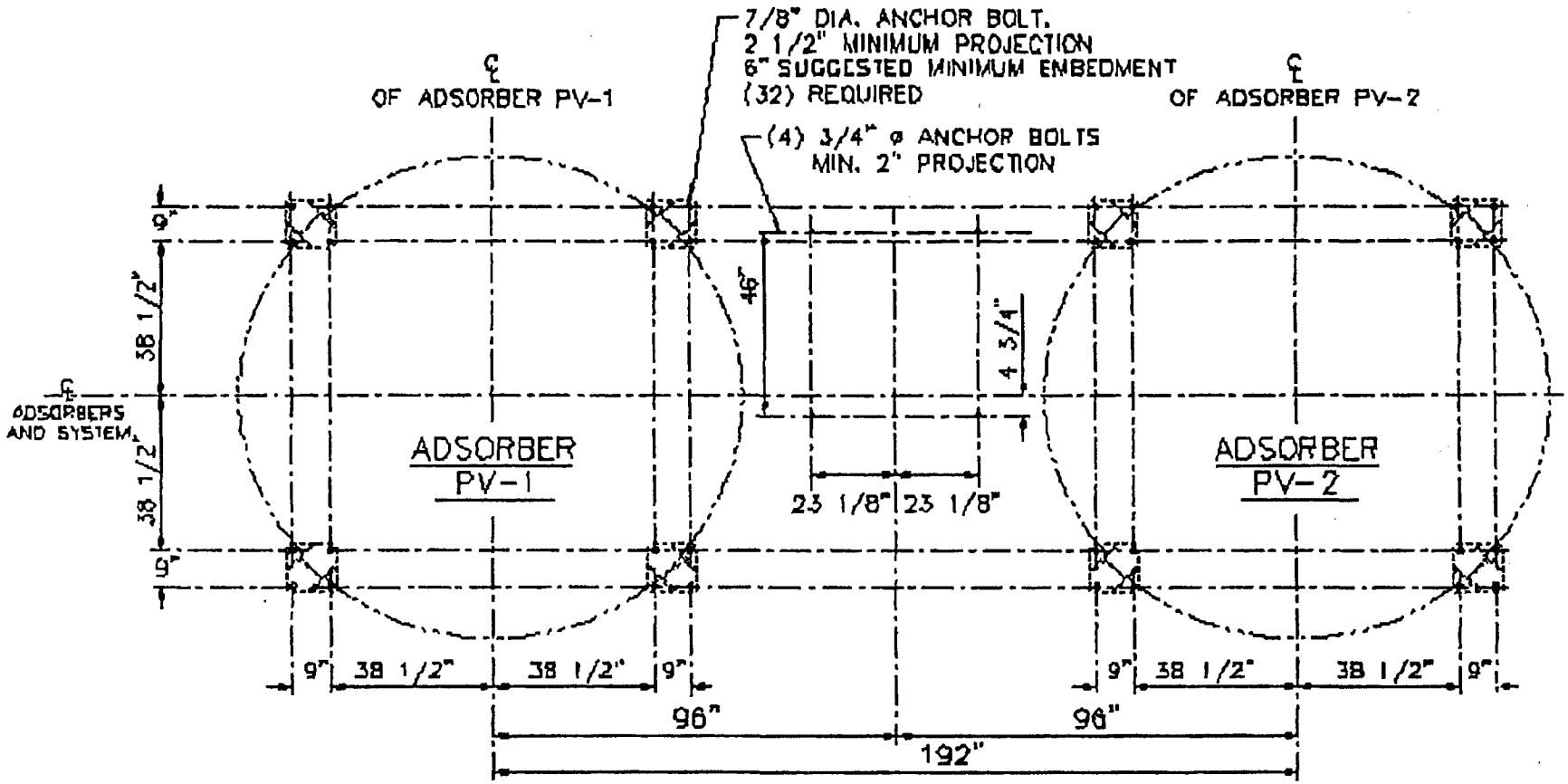

ANCHOR PATTERN SHOWN IS FOR ATTACHMENT OF VESSEL BASEPLATES TO A CONCRETE SLAB IN SIESMIC ZONE 4. THE TWO LARGE CENTER HOLES IN EACH BASEPLATE ARE FOR ATTACHMENT TO STEEL FRAMING.

Modular 10 System Footprint

OK

CALGON

CALGON CARBON CORPORATION

CHEMICAL FEED PUMPS (MP-201, MP-202 &MP-203)

Data Sheet

Series G, Model B
Mechanical Metering Pumps

Configuration Data

Model G51 8 - 541P

Output Code[1]

G51 ..... 26 GPH @ 60 Hz (82 l/h @ 50 Hz) .... 150 psi (10.0 Bar)
G52 ..... 53 GPH @ 60 Hz (167 l/h @ 50 Hz) .... 150 psi (10.0 Bar)
G53 ..... 106 GPH @ 60 Hz (334 l/h @ 50 Hz) .... 150 psi (10.0 Bar)
G58[2] ..... (418 l/h @ 50 Hz) ..... (10.0 Bar)
G63 ..... 147 GPH @ 60 Hz (464 l/h @ 50 Hz) .... 100 psi (7.0 Bar)
G68[2] ..... (580 l/h @ 50 Hz) ..... (7.0 Bar)
G73 ..... 300 GPH @ 60 Hz (946 l/h @ 50 Hz) ..... 50 psi .. (3.5 Bar)
G78[2] ..... (1183 l/h @ 50 Hz) ..... (3.5 Bar)

Motor

8 ..... 3/4 hp, 1-Phase, 60 Hz, 115/230 V, 1800 rpm, TEFC, 56C Frame
K ..... 0.55 kW, 3-Phase, 50 Hz, 220/380 V, 1500 rpm, TEFC, F165 Flange, 80 Frame
J ..... 3/4 hp, 3-Phase, 60 Hz, 230/460 V, 1800 rpm, TEFC, 56C Frame
H ..... AC Variable Speed Motor, 1 hp, 3-Phase, 230 V,50/60 Hz
P ..... DC Variable Speed Motor,1 hp, 1-Phase, 120 V, 50/60 Hz
N ..... No Motor (IEC 80 Frame, F165 Flange)
X ..... No Motor (56C Frame)

Liquid End

See next page for complete liquid end specifications and selection.

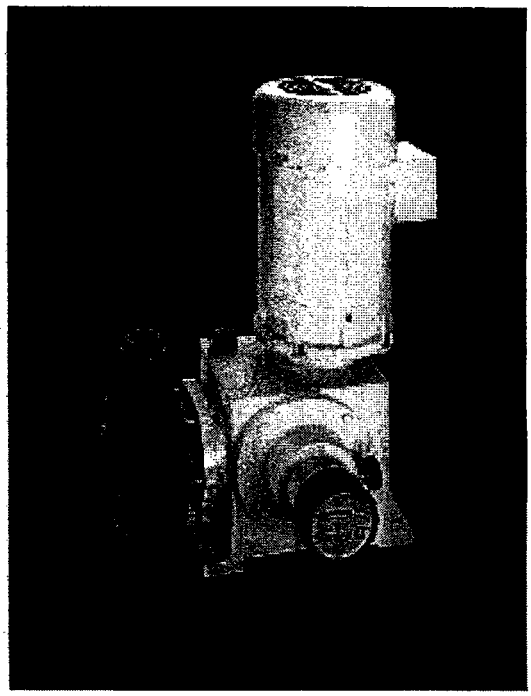

Specifications

Series	Capacity[1] (per Hour) Gallons @ 60 Hz	Liters @50 Hz	Strokes per Minute 60 Hz	50 Hz	Maximum Injection Pressure	Stroke Length (Adjustable) Recommended Minimum	Shipping Weight
G51	26	82	43	36	150 psi (10 Bar)	0 - 100% (Minimum 10%)	88 lbs (40 kg)[3]
G52	53	167	86	72	150 psi (10 Bar)		
G53	106	334	173	144	150 psi (10 Bar)		
G58[2]	—	418	—	180	— (10 Bar)		
G63	147	464	173	144	100 psi (7 Bar)		
G68[2]	—	580	—	180	— (7 Bar)		
G73	300	946	173	144	50 psi (3.5 Bar)		
G78[2]	—	1183	—	180	— (3.5 Bar)		

(1) Outputs are at maximum rated pressure. At reduced pressures add 1% per 25 psi (1.7 Bar)
(2) Available only with 50 Hz motor
(3) 106 lbs (48 kg) with stainless steel liquid end

LMI MILTON ROY
8 Post Office Square
Acton, MA 01720 USA
TEL: (978) 263-9800
FAX: (978) 264-9172
http://www.lmipumps.com

ISO9001

Replaces same of Rev. B 1/98
1791.C 12/99

Configuration Data & Materials of Construction

Drive Assembly	Liquid End No.	Size Code	Materials of Construction: Head / Fittings	Valve Balls	Diaphragm	Valve Seat	Seals	Connections: Inch	Metric
	541P	40	Polypropylene/PVC	Glass	PTFE	PE	Viton®	1/2" NPT F	
	541Q	40	Polypropylene/PVC	Glass	PTFE	PE	Viton®		DN15
G51 ▣ –	542P	40	PVDF	Ceramic	PTFE	PVDF	PTFE	1/2" NPT F	
G52 ▣ –	542N	40	PVDF	Ceramic	PTFE	PVDF	PTFE		1/2" BSP F
G53 ▣ –	547P	40	316 SS	316 SS	PTFE	316 SS	Viton®	1/2" NPT F	
G58 ▣ –	547N	40	316 SS	316 SS	PTFE	316 SS	Viton®	.	1/2" BSP F
	548P	40	PVC	Glass	PTFE	PE	Viton®	1/2" NPT F	
	548Q	40	PVC	Glass	PTFE	PE	Viton®		DN15
	561P	60	Polypropylene/PVC	PVC	PTFE	PE	Viton®	1" NPT F	
	561Q	60	Polypropylene/PVC	PVC	PTFE	PE	Viton®		DN25
	562P	60	PVDF	Ceramic	PTFE	PVDF	PTFE	1" NPT F	
G63 ▣ –	562N	60	PVDF	Ceramic	PTFE	PVDF	PTFE		1" BSP F
G68 ▣ –	567P	60	316 SS	316 SS	PTFE	316 SS	PTFE	1" NPT M	
	567N	60	316 SS	316 SS	PTFE	316 SS	PTFE		1" BSP M
	568P	60	PVC	PVC	PTFE	PE	Viton®	1" NPT F	
	568Q	60	PVC	PVC	PTFE	PE	Viton®		DN25
	581P	80	Polypropylene/PVC	PVC	PTFE	PE	Viton®	1" NPT F	
	581Q	80	Polypropylene/PVC	PVC	PTFE	PE	Viton®		DN25
	582P	80	PVDF	Ceramic	PTFE	PVDF	PTFE	1" NPT F	
G73 ▣ –	582N	80	PVDF	Ceramic	PTFE	PVDF	PTFE		1" BSP F
G78 ▣ –	587P	80	316 SS	316 SS	PTFE	316 SS	PTFE	1" NPT M	
	587N	80	316 SS	316 SS	PTFE	316 SS	PTFE		1" BSP M
	588P	80	PVC	PVC	PTFE	PE	Viton®	1" NPT F	
	588Q	80	PVC	PVC	PTFE	PE	Viton®		DN25

▣ See front page for voltage code specifications.

Viton is a registered trademark of E. I. du Pont de Nemours & Co., Inc.

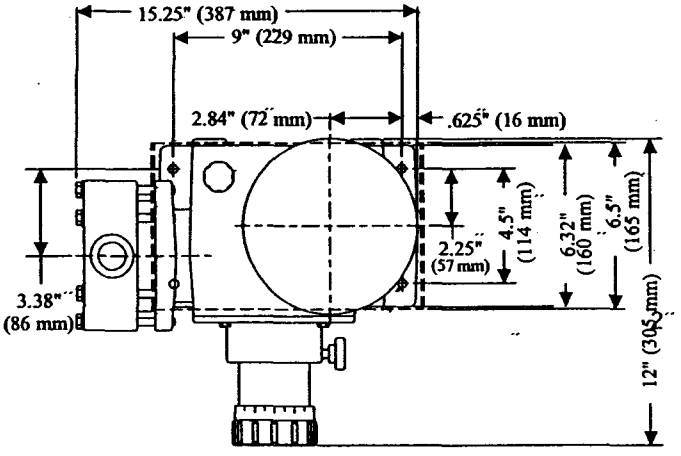

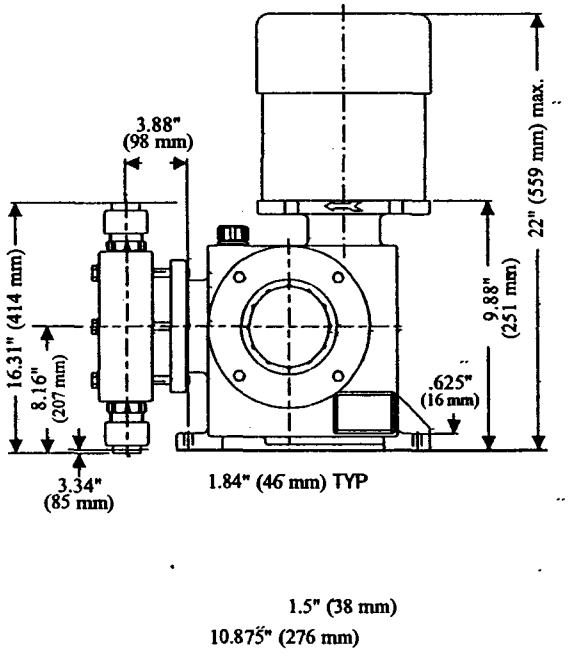

© 1999 LMI Milton Roy - All Rights Reserved
Printed in USA
Specifications subject to change without notice.

Data Sheet

Series C

Electronic Metering Pumps

Configuration Data

Model C92 1 - 363SI

Control & Output Code

Manual Control
Speed (stroking frequency) and stroke length manually adjustable.

C10 — 1.3 GPH (4.9 l/h) ... 300 psi (20.7 Bar)
C11 — 2.5 GPH (9.5 l/h) ... 150 psi (10.3 Bar)
C12 — 4.0 GPH (15.1 l/h) ... 100 psi (6.9 Bar)
C13 — 8.0 GPH (30 l/h) ..... 60 psi (4.1 Bar)
C14 — 20 GPH (76 l/h) ..... 25 psi (1.7 Bar)

Instrument Responsive/Manual Control
Manual adjustment features of C1 Series plus switch conversion to external control for automatic systems.

C70 — 1.3 GPH (4.9 l/h) ... 300 psi (20.7 Bar)
C71 — 2.5 GPH (9.5 l/h) ... 150 psi (10.3 Bar)
C72 — 4.0 GPH (15.1 l/h) ... 100 psi (6.9 Bar)
C73 — 8.0 GPH (30 l/h) ..... 60 psi (4.1 Bar)
C74 — 20 GPH (76 l/h) ..... 25 psi (1.7 Bar)
C77 — 10 GPH (38 l/h) ..... 80 psi (5.5 Bar)
C78 — 25 GPH (95 l/h) ..... 30 psi (2.07 Bar)
C90 — 1.3 GPH (4.9 l/h) ... 300 psi (20.7 Bar)
C91 — 2.5 GPH (9.5 l/h) ... 150 psi (10.3 Bar)
C92 — 4.0 GPH (15.1 l/h) ... 100 psi (6.9 Bar)
C93 — 8.0 GPH (30 l/h) ..... 60 psi (4.1 Bar)
C94 — 20 GPH (76 l/h) ..... 25 psi (1.7 Bar)

Voltage Code

1 —— 120 VAC US Plug
2 —— 240 VAC US Plug
3 —— 220-240 VAC DIN Plug
5 —— 240-250 VAC, UK Plug
6 —— 240-250 VAC, AUST/NZ Plug
7 —— 220-240 VAC, SWISS Plug

Liquid End

See next page for complete liquid end specifications and selection.

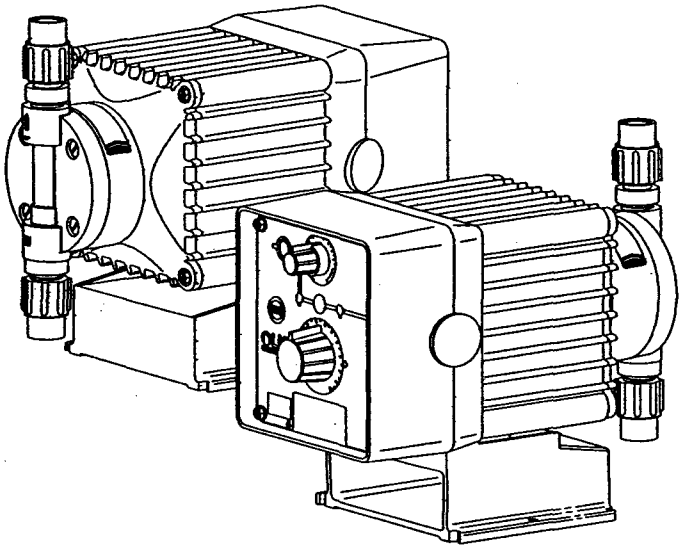

Dimensions

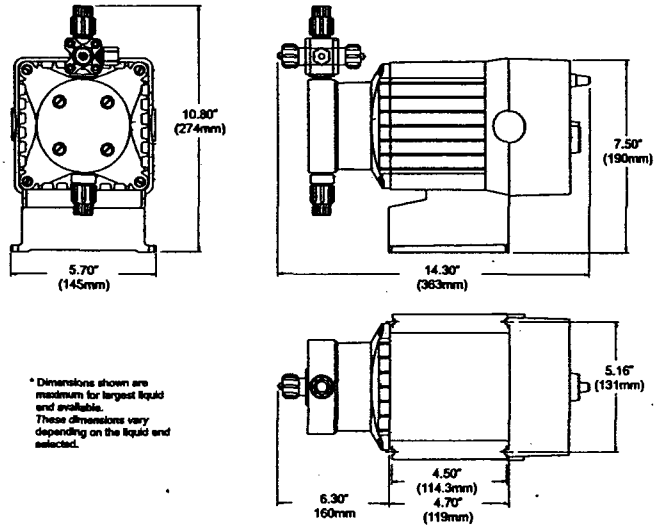

* Dimensions shown are maximum for largest liquid end available. These dimensions vary depending on the liquid end selected.

Specifications

Series	Strokes Per Minute (Adjustable) Min	Max	Stroke Length (Adjustable) Recommended Minimum	Average Input Power @ Max Speed	Shipping Weight
C10, C70, C90 C11, C71, C91 C12, C72, C92 C13, C73, C93 C14, C74, C94	1	100	10%	44 watts	20 lbs (9.1 kg)
C77 C78	1	100	10%	87 watts	28 lbs (12.7 kg)

LMI MILTON ROY
8 Post Office Square
Acton, MA 01720 USA
TEL: (978) 263-9800
FAX: (978) 264-8172
http://www.lmipumps.com

Replaces same of Rev.C 9/97
1712.D 10/99

Configuration Data & Materials of Construction

Drive Assembly	Liquid End No.	Size Code	Materials of Construction: Head & Fittings	Balls	Liquiframe™	Seal Ring	Accessory	Tubing & Connections: Discharge	Suction
C90 ▣ -									
C70 ▣ -	297	0.9	316 S.S.	316 S.S.	Fluorofilm™	316 S.S.		Pipe 1/4" NPT M	
C10 ▣ -	94S**	0.9	PVC	Ceramic	Fluorofilm™	PTFE	4FV	Pipe 1/4" NPT M	
	360SI †	1.8	Acrylic/PGC	Ceramic	Fluorofilm™	PGC / Polyprel®	4FV	PE .375" O.D.	
	361SI †	1.8	PGC/PGC	Ceramic	Fluorofilm™	PGC / Polyprel®	4FV	PE .375" O.D.	
C91 ▣ -	362SI †	1.8	PVDF / PVDF	Ceramic	Fluorofilm™	PVDF/ Polyprel®	4FV	PE .375" O.D.	
C92 ▣ -	363SI †	1.8	PVDF / PVDF	Ceramic	Fluorofilm™	PVDF/ PTFE	4FV	PE .375" O.D.	
C71 ▣ -	277	1.8	316 S.S.	316 S.S.	Fluorofilm™	316 S.S.		Pipe 1/4" NPT M	
C72 ▣ -	71FS	1.8	Acrylic/PVDF	PTFE	Hypalon®	Hypalon®	4FV	PE .5" O.D.	Vinyl .5" O.D.
C11 ▣ -	71S †	1.8	Acrylic/PVC	Ceramic	Fluorofilm™	PTFE	4FV	PE .5" O.D.	Vinyl .5" O.D.
C12 ▣ -	72S †	1.8	PVC	Ceramic	Fluorofilm™	PTFE	4FV	PE .5" O.D.	
	74S**	1.8	PVC	Ceramic	Fluorofilm™	PTFE	4FV	Pipe 1/4" NPT M	
	75HV	1.8	Polypropylene	316 S.S.	Fluorofilm™	PTFE		PE .5" O.D.	Vinyl .938" O.D.
	75S †	1.8	Polypropylene	Ceramic	Fluorofilm™	PTFE	4FV	PE .5" O.D.	
	76	1.8	Acrylic/PP	316 S.S.	Fluorofilm™	Hypalon®		PE .5" O.D.	Vinyl .938" O.D.
	79	1.8	UHMW PE	Ceramic	Hypalon®	Hypalon®		PE .5" O.D.	Vinyl .5" O.D.
	310SI †	3.0	Acrylic/PGC	Ceramic	Fluorofilm™	PGC / Polyprel®	4FV	PE .375" O.D.	
	311SI †	3.0	PGC/PGC	Ceramic	Fluorofilm™	PGC / Polyprel®	4FV	PE .375" O.D.	
	312SI †	3.0	PVDF / PVDF	Ceramic	Fluorofilm™	PVDF/ Polyprel®	4FV	PE .375" O.D.	
C93 ▣ -	313SI †	3.0	PVDF / PVDF	Ceramic	Fluorofilm™	PVDF / PTFE	4FV	PE .375" O.D.	
C73 ▣ -	20HV	3.0	Acrylic/PP	316 S.S.	Fluorofilm™	Hypalon®		PE .5" O.D.	Vinyl .938" O.D.
C13 ▣ -	20S**	3.0	Acrylic/PVC	Ceramic	Fluorofilm™	Hypalon®	4FV	PE .5" O.D.	Vinyl .5" O.D.
	24	3.0	PVC	Ceramic	Fluorofilm™	PTFE		Pipe 1/2" NPT M	
	25HV	3.0	Polypropylene	316 S.S.	Fluorofilm™	PTFE		PE .5" O.D.	Vinyl .938" O.D.
	25P	3.0	Polypropylene	Ceramic	Fluorofilm™	PTFE		Pipe 1/2" NPT M	
	25T	3.0	Polypropylene	Ceramic	Fluorofilm™	PTFE		PE .5" O.D.	
	26S**	3.0	PVC	Ceramic	Fluorofilm™	Viton®	4FV	PE .5" O.D.	
	27	3.0	316 S.S.	316 S.S.	Fluorofilm™	PTFE		Pipe 1/2" NPT M	
	29	3.0	UHMW PE	Ceramic	Fluorofilm™	Hypalon®		PE .5" O.D.	
	30	6.0	Acrylic/PVC	Ceramic	Fluorofilm™	PTFE		PE .5" O.D	Vinyl .5" O.D.
C94 ▣ -	32	6.0	PVDF	Ceramic	Fluorofilm™	PTFE		PE .5" O.D.	
C78 ▣ -	34	6.0	PVC	Ceramic	Fluorofilm™	PTFE		Pipe 1/2" NPT M	
C74 ▣ -	35P	6.0	Polypropylene	Ceramic	Fluorofilm™	PTFE		Pipe 1/2" NPT M	
C14 ▣ -	35T	6.0	Polypropylene	Ceramic	Fluorofilm™	PTFE		PE .5" O.D.	
	36	6.0	PVC	Ceramic	Fluorofilm™	PTFE		PE .5" O.D.	
	37	6.0	316 S.S.	316 S.S.	Fluorofilm™	PTFE		Pipe 1/2" NPT M	
	20HV	3.0	Acrylic/PP	316 S.S.	Fluorofilm™	Hypalon®		PE .5" O.D.	Vinyl .938" O.D.
	20S**	3.0	Acrylic/PVC	Ceramic	Fluorofilm™	Hypalon®	4FV	PE .5" O.D.	Vinyl .5" O.D.
	24	3.0	PVC	Ceramic	Fluorofilm™	PTFE		Pipe 1/2" NPT M	
C77 ▣ -	25HV	3.0	Polypropylene	316 S.S.	Fluorofilm™	PTFE		PE .5" O.D.	Vinyl .938" O.D.
	25P	3.0	Polypropylene	Ceramic	Fluorofilm™	PTFE		Pipe 1/2" NPT M	
	25T	3.0	Polypropylene	Ceramic	Fluorofilm™	PTFE		PE .5" O.D.	
	26S**	3.0	PVC	Ceramic	Fluorofilm™	Viton®	4FV	PE .5" O.D.	
	27	3.0	316 S.S.	316 S.S.	Fluorofilm™	PTFE		Pipe 1/2" NPT M	
	29	3.0	UHMW PE	Ceramic	Fluorofilm™	Hypalon®		PE .5" O.D.	

▣ See front page for voltage code specifications.

** These Liquid Ends are available without a 4FV, simply drop the 'S' at the end of the Liquid End number to order the model without a 4FV.

† To specify ¼" NPT male, change 'T' to 'P'. To specify black, UV resistant tubing, change 'T' to 'U'. To specify Bleed 4FV, change 'S' to 'B'. To specify 3FV, change 'S' to 'T'.
Fluorofilm™ is a copolymer of PTFE and PFA.
Polyprel® is an elastomeric PTFE copolymer.

4FV indicates that the pump is equipped with an LMI Four Function Valve. This diaphragm type anti-syphon/pressure relief valve is installed on the pump head. It provides anti-syphon protection and aids in priming, even under pressure.

Output Information

Model Series	Gallons per Hour Min	Gallons per Hour Max	Liters per Hour Min	Liters per Hour Max	mL/cc per Minute Min	mL/cc per Minute Max	mL/cc per Stroke Min	mL/cc per Stroke Max	Maximum Injection Pressure
C10, C70*, C90*	0.001	1.3	0.005	4.9	0.08	82	0.08	0.82	300 psi (20.7 Bar)
C11, C71*, C91*	0.003	2.5	0.010	9.5	0.16	158	0.16	1.58	150 psi (10.3 Bar)
C12, C72*, C92*	0.004	4.0	0.015	15.1	0.25	252	0.25	2.52	100 psi (6.9 Bar)
C13, C73*, C93*	0.008	8.0	0.030	30	0.51	505	0.51	5.05	60 psi (4.1 Bar)
C14, C74*, C94*	0.020	20.0	0.076	76	1.26	1262	1.26	12.62	25 psi (1.7 Bar)
C77*	0.010	10.0	0.038	38	0.63	631	0.63	6.31	80 psi (5.5 Bar)
C78*	0.025	25.0	0.095	95	1.58	1577	1.58	15.77	30 psi (2.07 Bar)

* Minimum output is based on 1 stroke per minute and 10% stroke setting, minimum output can be reduced further in external mode. Series C9 pumps may be programmed for strokes per hour for lower outputs.

© 1999 LMI Milton Roy - All Rights Reserved
Printed in USA
Specifications subject to change without notice.

Polyprel is a registered trademark of Liquid Metronics Incorporated.
Flourofilm and Liquiframe are trademarks of Liquid Metronics Incorporated.
Hypalon and Viton are registered trademarks of E. I. du Pont de Nemours & Co., Inc.

Specification Sheet
Series C

GENERAL
Chemical metering pumps shall be positive displacement, Liquifram™ type pumps that are UL and CUL approved. Output volume shall be adjustable while pumps are in operation from zero to maximum capacity of:

C10, C70, C90 - 1.3 GPH (4.9 liters per hour)
C11, C71, C91 - 2.5 GPH (9.5 liters per hour)
C12, C72, C92 - 4.0 GPH (15.1 liters per hour)
C13, C73, C93 - 8.0 GPH (30.0 liters per hour)
C14, C74, C94 - 20.0 GPH (76.0 liters per hour)
C77 - 10.0 GPH (38.0 liters per hour)
C78 - 25.0 GPH (95.0 liters per hour)

Chemical metering pumps shall be capable, without a hydraulically backed diaphragm, of injecting solutions against pressures up to:

C10, C70, C90 - 300 psig (20.7 bar)
C11, C71, C91 - 150 psig (10.3 bar)
C12, C72, C92 - 100 psig (6.9 bar)
C13, C73, C93 - 60 psig (4.1 bar)
C14, C74, C94 - 25 psig (1.7 bar)
C77 - 80 psig (5.5 bar)
C78 - 30 psig (2.1 bar)

SERIES C1
Adjustment shall be by means of readily accessible dial knobs, one for changing stroke length and the other for changing stroke frequency (speed). Both knobs are to be located opposite the liquid handling end.

SERIES C7
Control of Series C7 metering pumps shall be selectable between internal and external pulsing by means of a 3-position center-off switch. Stroke length shall be adjustable by means of readily accessible dial knob. When in external pulsed mode, Series C7 units shall accept signals without the use of electrical timer or internal timer. Pressure capacity shall be adjustable to reduce noise, vibration and wear.

SERIES C9
Series C9 metering pumps shall have a clear liquid crystal display. Control shall be selectable between internal and external pulsing by means of a tactile keypad. Internal stroke frequency shall be adjustable from 1 stroke per hour to 100 strokes per minute. Pressure capacity shall be keypad adjustable to reduce noise, vibration and wear. Metering pump shall be capable of dividing or multiplying pulse inputs from 1 to 999 or responding directly or inversely to a 4-20mA input signal.

DRIVE
The pump drive shall be totally enclosed with no exposed moving parts. Solid state electronic pulser shall be encapsulated and supplied with quick connect terminals at least 3/16" (4.75 mm) wide. Electronics shall be housed in chemical resistant enclosure at the rear of the pump for maximum protection against chemical spillage. Electrical power consumption shall not exceed 87 watts under full speed and maximum pressure conditions. Pump weight shall not exceed 28 lbs (12.7 kg).

AUTOMATIC PRESSURE RELIEF
To eliminate need for pressure relief valve, Liquifram™ shall automatically stop pulsating when discharge pressure exceeds pump pressure rating by not more than 35%.

MATERIAL
Chemical metering pump housing shall be of chemically resistant glass fiber reinforced thermoplastic with a glass fiber reinforced polypropylene EPU carrier[1]. All exposed fasteners shall be stainless steel. Chemical metering pump valves shall be ball type, with ceramic balls[2]. Valve seat and seal ring shall be renewable by replacing the combination seat-seal ring[3] or cartridge valve assembly. Pump head shall be of transparent acrylic[4] material capable of resisting the pumped chemical. Fittings and connections at pump head shall be PVC[5].

CHECK VALVES AND TUBING
A total of 16 ft (4.8 m) of polyethylene tubing[6] shall be provided per pump complete with compression connections. A foot valve with integral one piece strainer shall be provided for the suction line, and an injection check/back pressure valve with ½" NPT male connection for the injection point. The injection check valve shall incorporate a dilating orifice which prohibits scale formation and accumulation of crystalline deposits.

Notes:

1. With plastic coated cast iron EPU carrier for Series C77 and C78.
2. Type 316 stainless steel or PTFE may be specified.
3. Hypalon®, PTFE, Viton® or Polyprel® may be specified
4. PVC, polypropylene, or Type 316 stainless steel may be specified.
5. PVDF, Polypropylene, or Type 316 stainless steel may be specified.
6. 6 ft. (1.8 m) of vinyl suction tubing may be specified in place of polyethylene for the suction side only. 1/4" or 1/2" male pipe thread may be specified.

LMI MILTON ROY

8 Post Office Square
Acton, MA 01720 USA
TEL: (978) 263-9800
FAX: (978) 264-9172
http://www.lmipumps.com

ISO9001

Replaces same of Rev. B 8/97
1619. C 12/99

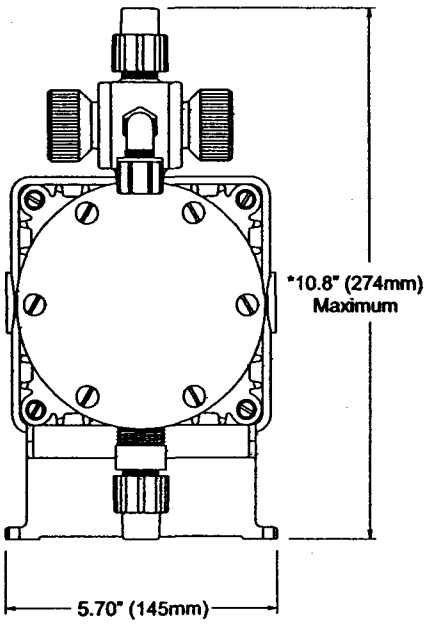

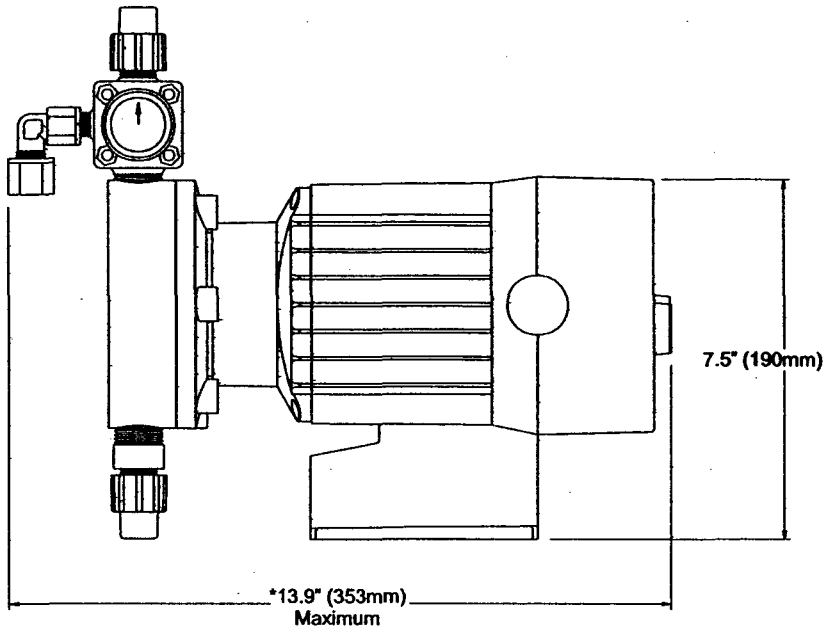

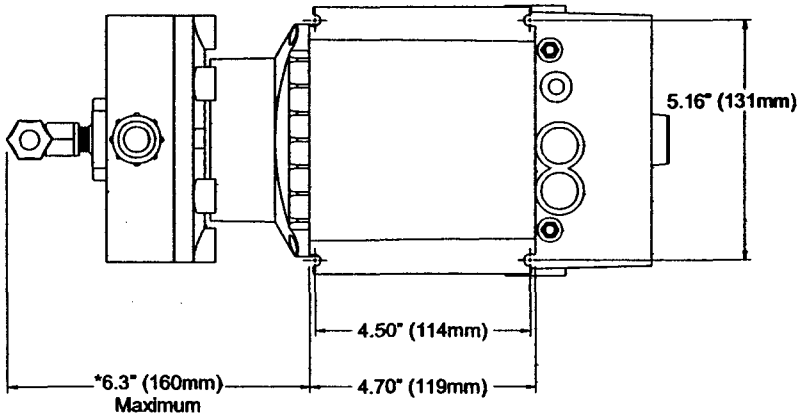

*Dimensions shown are maximum for largest liquid end available.These dimensions vary depending on the liquid end selected.

© 1999 LMI Milton Roy - All Rights Reserved
Printed in USA
Specifications subject to change without notice.

Polyprel is a registered trademark of Liquid Metronics Incorporated.
Liquifram, Liquitron, Micropace are trademarks of Liquid Metronics Incorporated.
Hypalon and Viton are registered trademarks of E. I. du Pont de Nemours & Co., Inc.

SUMP PUMPS (601 A/B)

"Quality Pumps Since 1939"

Product information presented here reflects conditions at time of publication. Consult factory regarding discrepancies or inconsistencies.

ZOELLER PUMP CO.

MAIL TO: P.O. BOX 16347 • Louisville, KY 40256-0347
SHIP TO: 3649 Cane Run Road • Louisville, KY 40211-1961
(502) 778-2731 • 1 (800) 928-PUMP • FAX (502) 774-3624

visit our web site:
http://www.zoeller.com

SECTION: 2.20.060
FM0659
1299
Supersedes
1297

185 - 186 - 188 - 189 Single Seal Series
4185 - 4186 - 4188 - 4189 Double Seal Series
191 Single Seal Drip Pump

(For Pump Prefix Identification see News & Views 0052)

HIGH HEAD "FLOW-MATE"

FOR SEPTIC TANK • LOW PRESSURE PIPE (LPP)
AND ENHANCED FLOW STEP SYSTEMS

EFFLUENT

OR DEWATERING PUMP • SUBMERSIBLE
1½" NPT DISCHARGE STANDARD • 2" or 3" FLANGE AVAILABLE

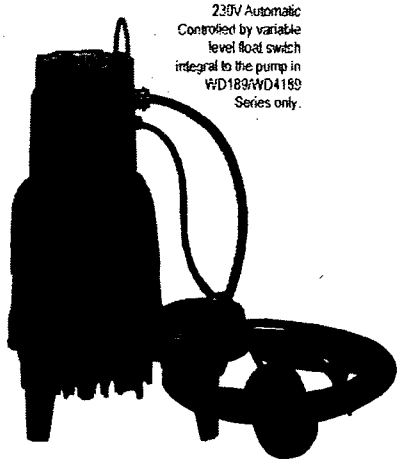

230V Automatic Controlled by variable level float switch integral to the pump in WD189/WD4189 Series only.

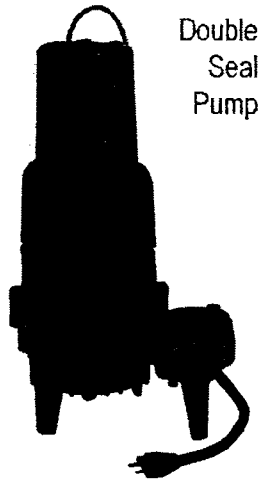

Double Seal Pump

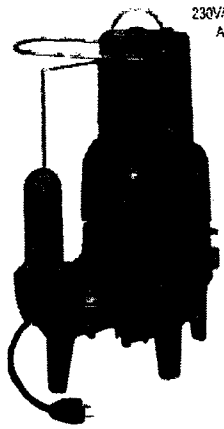

230V/1PH Automatic Available in 185, 186, 188, 189 Series

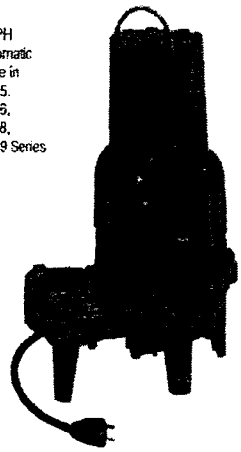

230V/1PH Nonautomatic Available in 185/4185, 186/4186, 188/4188, 189/4189 Series

POWDER COATED TOUGH™

COMPARE THESE FEATURES

- Non-clogging vortex impeller design bronze class 88-8-0-4 (180 Series).
- Enclosed impeller design (191 Series).
- Float operated, submersible (NEMA 6) 2-pole mechanical switch.
- Durable cast construction. Cast iron switch case, base, motor and pump housing. No sheet metal parts to rust or corrode.
- Stainless steel screws, bolts, float rod, handle, guard, arm and seal assembly.
- 20' UL-listed 3-wire neoprene cord and plug. Extra cord lengths available in 25-35-50 foot length only.
- Motor - 60 cycle, 3450 RPM, oil-filled, hermetically sealed, automatic reset, thermal overload protected (1 PH only).
- Maximum temperature for effluent or dewatering 130° F. 54° C, WD189 120° F (49° C).
- Variable level control systems available.
- Square Ring & Gasket - Neoprene.
- Shaft Seal - Stainless steel carbon & ceramic rotary.
- Upper sleeve bearing and lower ball bearing running in bath of oil.
- All 180/4180 series pass ¾-inch solids (sphere). Model 191 pump passes ⅝- inch solids (sphere).
- On point 14¾" • Off point 5" (automatic units).
- Major width 12¾" • Height 18 9/16". (Single seal pumps)
- 1½" NPT discharge with 2" or 3" flange available. (Model 191 is not availiable with 3" flange)
- Corrosion resistant powder coated epoxy finish.

MODELS 4185-4186-4188-4189 DOUBLE SEAL PUMPS (Nonauto only)

- Protects motor from seal leaks.
- Improved bearing lubrication.
- Helps eliminate seal and bearing damage from dry runs.
- Major width 12 ¾". Height 20 7/16".

Note: The sizing of effluent systems normally requires variable level float(s) controls and properly sized basins to achieve required pumping cycles.

AUTOMATIC UNITS NOT RECOMMENDED FOR USE IN EFFLUENT SYSTEMS

*NOTE: No UL Listing for 200/208 1 Phase Pumps, Model 186 & 191, or Double Seal Series.
See Back Page for UL & CSA Listings

Nonautomatic Model for variable level systems

© Copyright 1999 Zoeller Co. All rights reserved.

Model 4188

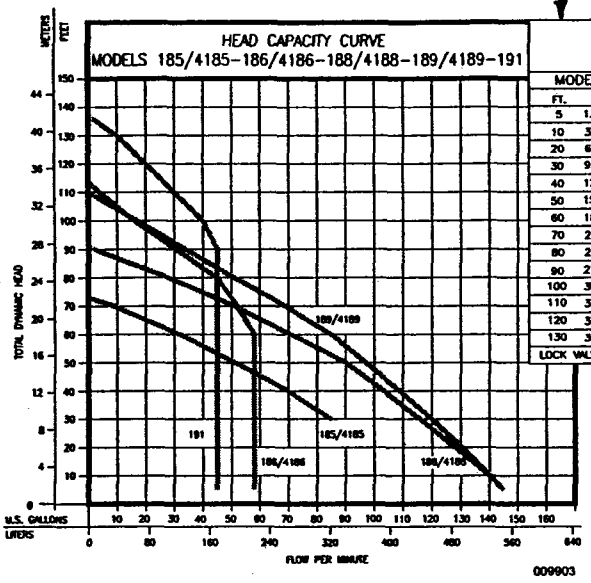

TOTAL DYNAMIC HEAD/ FLOW PER MINUTE EFFLUENT AND DEWATERING											
MODEL		185/4185		186/4186		188/4188		189/4189		191	
FT.	M.	GAL.	LTRS.	GAL.	LTRS.	GAL.	LTRS.	GAL.	LTRS.	GAL.	LTRS.
5	1.52			58	220	145	549	145	549	45	170
10	3.05			58	220	140	530	140	530	45	170
20	6.10			58	220	128	484	130.5	494	45	170
30	9.14	85	322	58	220	116	439	120	454	45	170
40	12.19	70	265	58	220	103.5	392	109	413	45	170
50	15.24	51	193	58	220	90	341	97	367	45	170
60	18.29	32	121	58	220	71	269	85	322	45	170
70	21.34	9	34	52	197	51	193	69	261	45	170
80	24.38			45	170	28	106	51	193	45	170
90	27.43			30.5	115	2	8	34	129	45	170
100	30.48			16	60			17	64	40	151
110	32.00			4	15					30	114
120	36.58									20	76
130	39.62									10	38
LOCK VALVE:		73'		114'		91'		110'		137'	

WARNING: Model 185 should not be subjected to heads less than 30 feet TDH.

Single Seal-180 Series Automatic Design Weight 82-89 lbs.

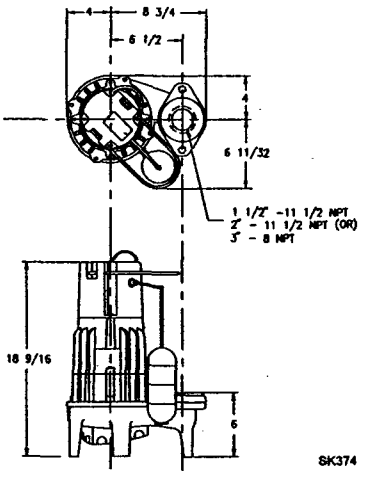

185 MODELS	4185 MODELS	Standard all models - 20 ft. cord - 1 H.P.				Control Selection		Listings	
Single Seal	Double Seal	Volts -	Ph	Mode	Amps	Simplex	Duplex	CSA	UL
D185	—	230	1	Auto	9.8	1 or 1 & 8		Y	Y
E185	E4185	230	1	Non	9.8	2 or 2 & 7	3 or 5 & 6	Y(2)	Y
* H185	—	200-208	1	Auto	11.5	1 & 8		N	N
* I185	* I4185	200-208	1	Non	11.5	2 & 7	3 or 5 & 6	N	N
* F185	* F4185	230	3	Non	7.4	4 & 6	3 & 4 or 5 & 6	Y	Y
* J185	* J4185	200-208	3	Non	7.5	4 & 6	3 & 4 or 5 & 6	Y	Y
* G185	* G4185	460	3	Non	3.7	4 & 6	3 & 4 or 5 & 6	Y	Y
* BA185	—	575	3	Non	3.3	4 & 6	3 & 4 or 5 & 6	Y	N

186 MODELS	4186 MODELS	Standard all models - 20 ft. cord - 1½ H.P.				Control Selection		Listings	
Single Seal	Double Seal	Volts -	Ph	Mode	Amps	Simplex	Duplex	CSA	UL
D186	—	230	1	Auto	13.7	1 or 1 & 8		N	N
E186	E4186	230	1	Non	13.7	2 or 2 & 7	3 or 5 & 6	N	N
* F186	* F4186	230	3	Non	9.2	4 & 6	3 & 4 or 5 & 6	N	N
* G186	* G4186	460	3	Non	4.6	4 & 6	3 & 4 or 5 & 6	N	N

188 MODELS	4188 MODELS	Standard all models - 20 ft. cord - 1½ H.P.				Control Selection		Listings	
Single Seal	Double Seal	Volts -	Ph	Mode	Amps	Simplex	Duplex	CSA	UL
D188	—	230	1	Auto	13.3	1 or 1 & 8		N	Y(1)
E188	E4188	230	1	Non	13.3	2 or 2 & 7	3 or 5 & 6	Y(2)	Y(1)
* H188	—	200-208	1	Auto	16.8	1 & 8		N	N
* I188	* I4188	200-208	1	Non	16.8	2 & 7	3 or 5 & 6	N	N
* F188	* F4188	230	3	Non	8.9	4 & 6	3 & 4 or 5 & 6	Y	Y
* J188	* J4188	200-208	3	Non	10.3	4 & 6	3 & 4 or 5 & 6	Y	Y
* G188	* G4188	460	3	Non	4.6	4 & 6	3 & 4 or 5 & 6	Y	Y
* BA188	—	575	3	Non	3.5	4 & 6	3 & 4 or 5 & 6	Y	N

189 MODELS	4189 MODELS	Standard all models - 20 ft. cord - 2 H.P.				Control Selection		Listings	
Single Seal	Double Seal	Volts -	Ph	Mode	Amps	Simplex	Duplex	CSA	UL
⊕ D189	—	230	1	Auto	17.1	1 or 1 & 8		N	Y(1)
⊕ E189	⊕ E4189	230	1	Non	17.1	2 & 7	3 or 5 & 6	Y(2)	Y(1)
* H189	—	200-208	1	Auto	20.5	1 & 8		N	N
* I189	* I4189	200-208	1	Non	20.5	2 & 7	3 or 5 & 6	N	N
* F189	* F4189	230	3	Non	11.2	4 & 6	3 & 4 or 5 & 6	Y	Y
* J189	* J4189	200-208	3	Non	13.2	4 & 6	3 & 4 or 5 & 6	Y	Y
* G189	* G4189	460	3	Non	6.0	4 & 6	3 & 4 or 5 & 6	Y	Y
* BA189	—	575	3	Non	5.8	4 & 6	3 & 4 or 5 & 6	Y	N
⊕ WD189	* WD4189	230	1	Auto	17.1	2 or 2 & 8		N	N

191 MODEL		Standard all models - 20 ft. cord - 2 H.P.				Control Selection		Listings	
Single Seal	Double Seal	Volts -	Ph	Mode	Amps	Simplex	Duplex	CSA	UL
E191	—	230	1	Non	14.5	2 or 2 & 7	3 or 5 & 6	N	N

* No Molded Plug
(1) UL Listed unit available with 20 Amp Plug.
(2) CSA Approval without plug cap.
(3) 20 Amp Outlet, P/N 10-0060 must be used.

Double Seal-4180 Series / Weight 89-94 lbs.

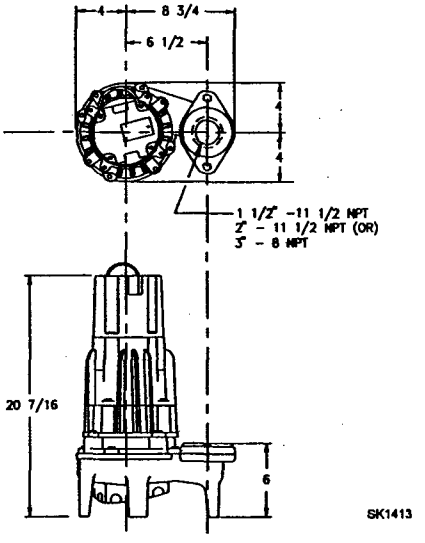

SELECTION GUIDE

1. Integral float operated 2-pole mechanical switch, no external control required.
2. Single piggyback variable level float switch or double piggyback variable level float switch. Refer to FM0477.
3. Mechanical alternator M-Pak 10-0072 or 10-0075. Refer to FM0495
4. Simplex three phase control panel. Refer to FM1228.
5. See FM0712 for correct model of Electrical Alternator.
6. Variable level control switch 10-0225 used as control activator, specify simplex (3) float or duplex (3) or (4) float system.

⚠ CAUTION

All installation of controls, protection devices and wiring should be done by a qualified licensed electrician. All electrical and safety codes should be followed including the most recent National Electric Code (NEC) and the Occupational Safety and Health Act (OSHA).

For information on additional Zoeller products refer to catalog on Piggyback Variable Level Float Switches, FM0477; Electrical Alternator, FM0486; Mechanical Alternator, FM0495; Sump/Sewage Basins, FM0487; Simplex Pump Control, FM1596; Alarm Systems, FM0732; and Disconnect/Rail Systems, FM0787.

RESERVE POWERED DESIGN

For unusual conditions a reserve safety factor is engineered into the design of every Zoeller pump.

© Copyright 1999 Zoeller Co. All rights reserved.

AIR COMPRESSOR SYSTEM (AC-701)

TANK MOUNTED

ROTARY SCREW AIR COMPRESSORS, 10-50 HP

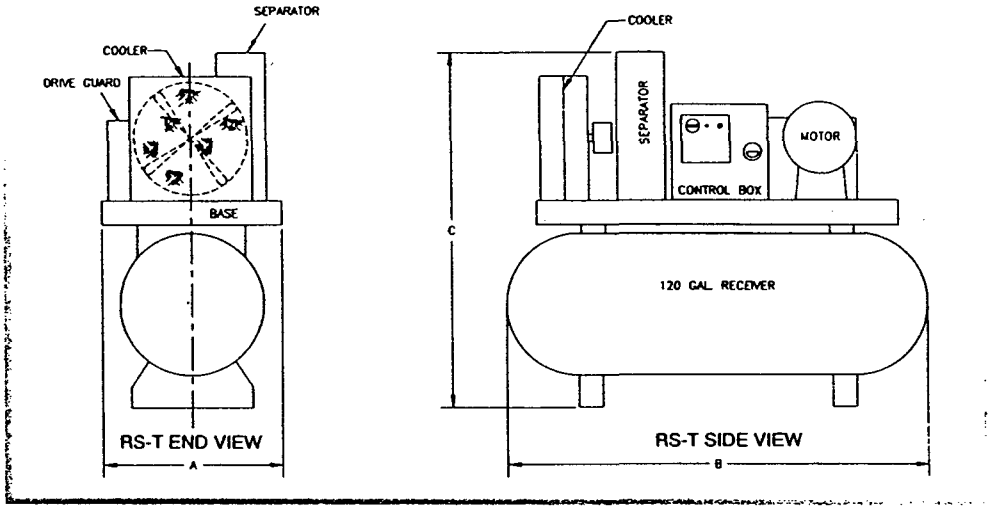

STANDARD EQUIPMENT

- Air End Manufactured to ISO 9001 Standards
- Dry Type Inlet Filter/Silencer
- Oil Filter
- V-Belt Drive
- Drive Guard
- Multi-Stage Oil Separator Unit
- ODP Motor, 60 HZ, 1.15 SF, Tri-Voltage
- Safety Valve on Separator Tank and Air Receiver
- ASME Code Air Receiver
- Pressure Gauge Liquid Filled
- Temperature Gauge
- Side-By-Side Air/Oil Cooler
- Aftercooler
- Nema 1 Control Panel with Starters
- 115 Volt Control Transformer
- Dual Control Switch with Timed Shutdown, 10-50 HP
- Hour Meter
- High Temperature Shut Down Switch with Light
- Oil Level Sight Glass
- Bucket High Tank Drain
- Factory Fill Lubricant
- Vibration Isolators
- Modulating Control on R/S 50-T with Timed Shutdown
- Minimum Pressure Valve
- Start-Stop Buttons on R/S 50-T
- Thermostatic Oil Valve
- High Separator Pressure–Switch
- Load/Unload Switch

SPECIFICATIONS

R/S-T MODEL	A IN.	B IN.	C IN.	WT. LBS.	HP	CFM/PSI				AIR OUT NPT
						100	125	150	175	
R/S 10-T	30	67	60	860	10	42	39	34	28	¾"
R/S 15-T	30	67	60	875	15	67	58	48	44	¾"
R/S 20-T	30	75	64	1305	20	88	82	71	61	1"
R/S 25-T	30	75	64	1380	25	108	104	92	80	1"
R/S 30-T	30	75	64	1470	30	140	130	118	97	1"
R/S 40-T	42	75	74	1745	40	191	173	150	129	1¼"
R/S 50-T	42	75	80	2170	50	225	212	186	172	1¼"

Copyright 1997 Curtis-Toledo, Inc.

Distributed by

CURTIS *The Symbol of Quality & Excellence Since 1854*

Curtis-Toledo • 1905 Kienlen Ave • St. Louis, Missouri 63133 • Curtiscomp@aol.com

Quality Air Systems

1. General purpose air
(ISO 8573.1: Class 2.–3.)

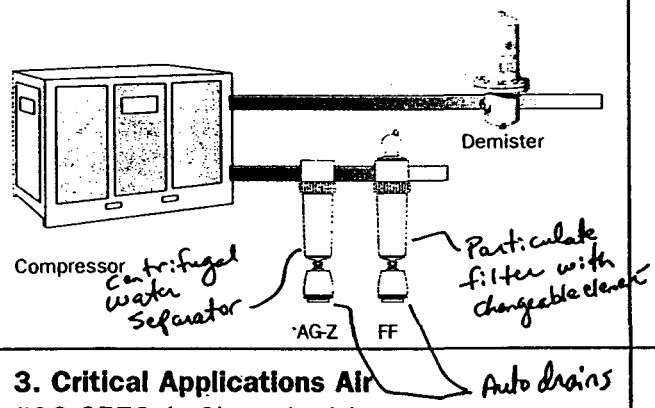

2. Oilfree Air
(ISO 8573.1: Class 1.–2.)

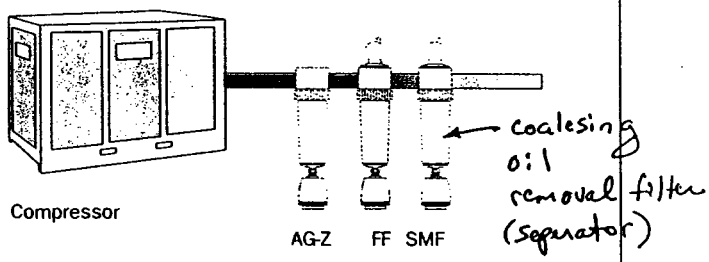

3. Critical Applications Air
(ISO 8573.1: Class 1.–1.)

Instrument Air

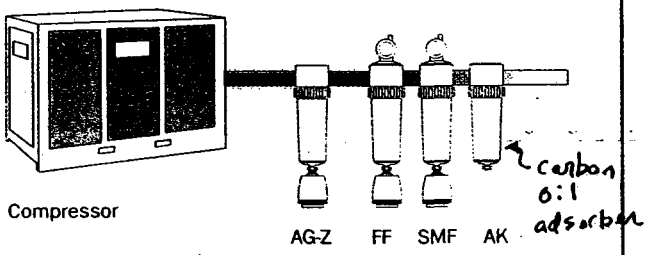

4. Reduced Dewpoint System
(ISO 8573.1: Class 1.4.1.)

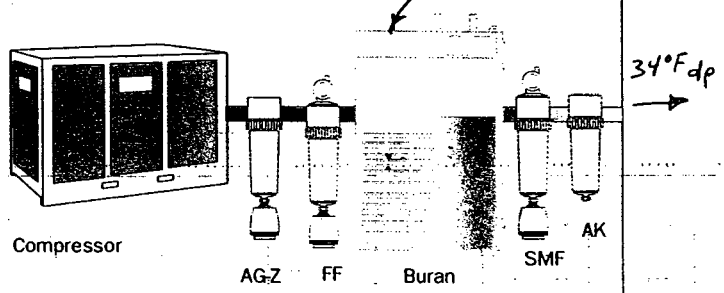

5. Extremely Low Dewpoint System
(ISO 8573.1: Class 1.1.1. and 1.2.1.)

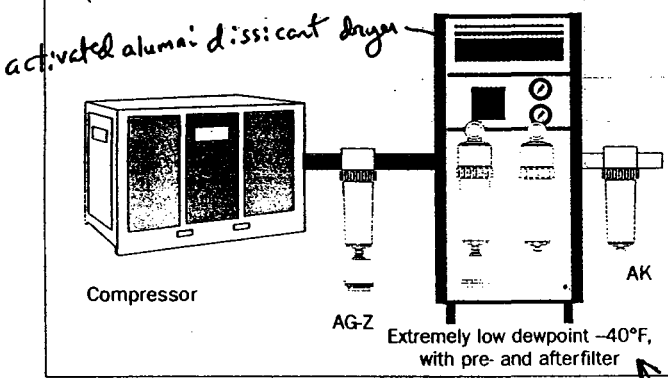

6. Critical Applications Air,
Dry, Oil And Oil Odor Free and Sterile
(ISO 8573.1:
Class 1.1.1.)

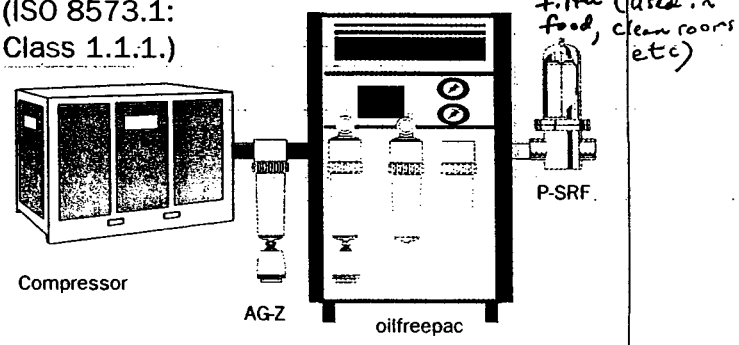

Quality Air
made by ultrafilter

Distributor:

Quality Air
made by ultrafilter

QUALITY AIR

DRYER/FILTER PACKAGE

DRY, CLEAN, OIL, OIL VAPOR AND ODOR FREE

EX WORKS. FREIGHT AND PACKAGING EXTRA.

Compressor Performance									
HP	**1.5**	**3**	**4**	**5**	**7.5**	**10**	**15**	**20**	**25**
cfm nominal	**5**	**12**	**15**	**20**	**30**	**40**	**60**	**85**	**100**
kW	**1.1**	**2.2**	**3**	**4**	**5.5**	**7.5**	**11**	**15**	**18.5**
m³/h	**10**	**20**	**25**	**35**	**50**	**65**	**100**	**150**	**175**
connection	**3/8"**	**1/2"**	**1/2"**	**1/2"**	**3/4"**	**3/4"**	**1"**	**1"**	**1"**
1. General Purpose									
Water Separator Type	AG-Z 70	AG-Z 70	AG-Z 70	AG-Z 70	AG-Z 70	AG-Z 70	AG-Z 70	AG-Z 0125	AG-Z 0125
US $	**$ 250**	**$ 250**	**$ 250**	**$ 250**	**$ 250**	**$ 250**	**$ 250**	**$ 260**	**$ 260**
Oil Removal Filter FF	AG 0010	AG 0020	AG 0020	AG 0020	AG 0050	AG 0050	AG 0070	AG 0100	AG 0100
US $	**$ 255**	**$ 255**	**$ 255**	**$ 255**	**$ 375**	**$ 375**	**$ 405**	**$ 440**	**$ 440**
or Demister (altern. to AG-Z + FF)	UFD 00$ 20	UFD 0020	UFD 0020	UFD 0020	UFD 0050	UFD 0050	UFD 0100	UFD 0100	UFD 0100
US $	**$ 480**	**$ 480**	**$ 480**	**$ 480**	**$ 535**	**$ 535**	**$ 825**	**$ 825**	**$ 825**
2. Oilfree Air									
Water Separator	AG-Z 70	AG-Z 70	AG-Z 70	AG-Z 70	AG-Z 70	AG-Z 70	AG-Z 70	AG-Z 0125	AG-Z 0125
US $	**$ 250**	**$ 250**	**$ 250**	**$ 250**	**$ 250**	**$ 250**	**$ 250**	**$ 260**	**$ 260**
Oil Removal Filter FF	AG 0010	AG 0020	AG 0020	AG 0020	AG 0050	AG 0050	AG 0070	AG 0100	AG 0100
US $	**$ 255**	**$ 255**	**$ 255**	**$ 255**	**$ 375**	**$ 375**	**$ 405**	**$ 440**	**$ 440**
Oil Removal Filter SMF	AG 0010	AG 0020	AG 0020	AG 0020	AG 0050	AG 0050	AG 0070	AG 0100	AG 0100
US $	**$ 255**	**$ 255**	**$ 255**	**$ 255**	**$ 375**	**$ 375**	**$ 405**	**$ 440**	**$ 440**
3. Critical Application									
Water Separator	AG-Z 70	AG-Z 70	AG-Z 70	AG-Z 70	AG-Z 70	AG-Z 70	AG-Z 70	AG-Z 0125	AG-Z 0125
US $	**$ 250**	**$ 250**	**$ 250**	**$ 250**	**$ 250**	**$ 250**	**$ 250**	**$ 260**	**$ 260**
Oil Removal Filter FF	AG 0010	AG 0020	AG 0020	AG 0020	AG 0050	AG 0050	AG 0070	AG 0100	AG 0100
US $	**$ 255**	**$ 255**	**$ 255**	**$ 255**	**$ 375**	**$ 375**	**$ 405**	**$ 440**	**$ 440**
Oil Removal Filter SMF	AG 0010	AG 0020	AG 0020	AG 0020	AG 0050	AG 0050	AG 0070	AG 0100	AG 0100
US $	**$ 255**	**$ 255**	**$ 255**	**$ 255**	**$ 375**	**$ 375**	**$ 405**	**$ 440**	**$ 440**
Activated Carbon Filter	AG 0010	AG 0020	AG 0020	AG 0020	AG 0050	AG 0050	AG 0070	AG 0100	AG 0100
US $	**$ 255**	**$ 255**	**$ 255**	**$ 255**	**$ 375**	**$ 375**	**$ 405**	**$ 440**	**$ 440**
4. Reduced Dew Point									
Water Separator	AG-Z 70	AG-Z 70	AG-Z 70	AG-Z 70	AG-Z 70	AG-Z 70	AG-Z 70	AG-Z 0125	AG-Z 0125
US $	**$ 250**	**$ 250**	**$ 250**	**$ 250**	**$ 250**	**$ 250**	**$ 250**	**$ 260**	**$ 260**
Oil Removal Filter FF	AG 0010	AG 0020	AG 0020	AG 0020	AG 0050	AG 0050	AG 0070	AG 0100	AG 0100
US $	**$ 255**	**$ 255**	**$ 255**	**$ 255**	**$ 375**	**$ 375**	**$ 405**	**$ 440**	**$ 440**
Fridge Dryer Buran	CP 0005	CP 0015	CP 0015	CP 0020	CP 0030	CP 0040	CP 0060	CP 0085	CP 0100
US $	**$ 625**	**$ 830**	**$ 830**	**$ 930**	**$ 1,065**	**$ 1,190**	**$ 1,615**	**$ 2,185**	**$ 2,360**
Oil Removal Filter SMF	AG 0010	AG 0020	AG 0020	AG 0020	AG 0050	AG 0050	AG 0070	AG 0100	AG 0100
US $	**$ 255**	**$ 255**	**$ 255**	**$ 255**	**$ 375**	**$ 375**	**$ 405**	**$ 440**	**$ 440**
Activated Carbon Filter	AG 0010	AG 0020	AG 0020	AG 0020	AG 0050	AG 0050	AG 0070	AG 0100	AG 0100
US $	**$ 255**	**$ 255**	**$ 255**	**$ 255**	**$ 375**	**$ 375**	**$ 405**	**$ 440**	**$ 440**
5. Extremely Low Dewpoint									
Water Separator	AG-Z 70	AG-Z 70	AG-Z 70	AG-Z 70	AG-Z 70	AG-Z 70	AG-Z 70	AG-Z 0125	AG-Z 0125
US $	**$ 250**	**$ 250**	**$ 250**	**$ 250**	**$ 250**	**$ 250**	**$ 250**	**$ 260**	**$ 260**
Desiccant Dryer –40 °F									
ultrapac 2000 superplus	UP SP 0005	UP SP 0015	UP SP 0015	UP SP 0020	UP SP 0030	UP SP 0040	UP SP 0060		
ultrapac classic								UP 0085	UP 0100
US $	**$ 1,350**	**$ 1,790**	**$ 1,790**	**$ 2,195**	**$ 2,545**	**$ 3,020**	**$ 3,855**	**$ 5,280**	**$ 5,655**
6. oilfreepac/purepac									
Dry –100 °F									
Oilfree < 0,003 ppm									
Odorfree, Particlefree									
Water Separator	AG-Z 70	AG-Z 70	AG-Z 70	AG-Z 70	AG-Z 70	AG-Z 70	AG-Z 70	AG-Z 0125	AG-Z 0125
US $	**$ 250**	**$ 250**	**$ 250**	**$ 250**	**$ 250**	**$ 250**	**$ 250**	**$ 260**	**$ 260**
Oilfreepac	OFP 0005	OFP 0015	OFP 0015	OFP 0020	OFP 0030	OFP 0050	OFP 0060	OFP 0085	OFP 0100
US $	**$ 4,665**	**$ 5,870**	**$ 5,870**	**$ 6,410**	**$ 6,995**	**$ 7,875**	**$ 8,790**	**$ 11,060**	**$ 11,925**
7. Condensate Management									
ultramat Condensate Drain	UFM-T 1	UFM-T 10	UFM-T 20	UFM-T 100					
US $	**$ 155**	**$ 175**	**$ 350**	**$ 510**					
ultrasep	UFS-SP 75	UFS-SP 75	UFS-SP 75	UFS-SP 75	UFS-SP 75	UFS-SP 75	UFS-SP 150	UFS-SP 150	UFS-SP 150
oil/water separator									
US $	$ 320	$ 320	$ 320	$ 320	$ 320	$ 320	$ 625	$ 625	$ 625

Nonbiodegr
DP

34°

QUALITY AIR

DRYER/FILTER PACKAGE

DRY, CLEAN, OIL, OIL VAPOR AND ODOR FREE

EX WORKS. FREIGHT AND PACKAGING EXTRA.

Quality Air made by ultrafilter

30	40	50	60	75	85	100	115	120	150	175	215
125	175	200	250	300	400	450	500	600	700	800	1000
22	30	37	45	55	65	75	90	90	110	132	160
225	300	375	450	550	650	750	850	1000	1175	1350	1650
1½"	1½"	1½"	1½"	2"	2"	2"	2"	2"	2½"	3"	3"
AG-Z 0125	AG-Z 0200	AG-Z 0200	AG-Z 0300	AG-Z 0300	AG-Z 0450	AG-Z 0450	AG-Z 600	AG-Z 600	AG-Z 900	AG-Z 900	AG-Z 1400
$ 260	$ 465	$ 465	$ 495	$ 495	$ 525	$ 525	$ 770	$ 770	$ 925	$ 925	$ 1,050
AG 0200	AG 0200	AG 0200	AG 0300	AG 0400	AG 0400	AG 0500	AG 0500	AG 0700	AG 0700	AG 0800	AG 1000
$ 495	$ 495	$ 495	$ 615	$ 815	$ 815	$ 1,010	$ 1,010	$ 1,190	$ 1,190	$ 1,505	$ 1,670
UFD 0200	UFD 0200	UFD 0200	UFD 0200	UFD 0500	UFD 0500	UFD 0500	UFD 0500	UFD 1000	UFD 1000	UFD 1000	UFD 1000
$ 1,080	$ 1,080	$ 1,080	$ 1,080	$ 2,460	$ 2,460	$ 2,460	$ 2,460	$ 3,100	$ 3,100	$ 3,100	$ 3,100
AG-Z 0125	AG-Z 0200	AG-Z 0200	AG-Z 0300	AG-Z 0450	AG-Z 0450	AG-Z 0450	AG-Z 600	AG-Z 600	AG-Z 900	AG-Z 900	AG-Z 1400
$ 260	$ 465	$ 465	$ 495	$ 495	$ 525	$ 525	$ 770	$ 770	$ 925	$ 925	$ 1,050
AG 0200	AG 0200	AG 0200	AG 0300	AG 0400	AG 0400	AG 0500	AG 0500	AG 0700	AG 0700	AG 0800	AG 1000
$ 495	$ 495	$ 495	$ 615	$ 815	$ 815	$ 1,010	$ 1,010	$ 1,190	$ 1,190	$ 1,505	$ 1,670
AG 0200	AG 0200	AG 0200	AG 0300	AG 0400	AG 0400	AG 0500	AG 0500	AG 0700	AG 0700	AG 0800	AG 1000
$ 495	$ 495	$ 495	$ 615	$ 815	$ 815	$ 1,010	$ 1,010	$ 1,190	$ 1,190	$ 1,505	$ 1,670
AG-Z 0125	AG-Z 0200	AG-Z 0200	AG-Z 0300	AG-Z 0450	AG-Z 0450	AG-Z 0450	AG-Z 600	AG-Z 600	AG-Z 900	AG-Z 900	AG-Z 1400
$ 260	$ 465	$ 465	$ 495	$ 495	$ 525	$ 525	$ 770	$ 770	$ 925	$ 925	$ 1,050
AG 0200	AG 0200	AG 0200	AG 0300	AG 0400	AG 0400	AG 0500	AG 0500	AG 0700	AG 0700	AG 0800	AG 1000
$ 495	$ 495	$ 495	$ 615	$ 815	$ 815	$ 1,010	$ 1,010	$ 1,190	$ 1,190	$ 1,505	$ 1,670
AG 0200	AG 0200	AG 0200	AG 0300	AG 0400	AG 0400	AG 0500	AG 0500	AG 0700	AG 0700	AG 0800	AG 1000
$ 495	$ 495	$ 495	$ 615	$ 815	$ 815	$ 1,010	$ 1,010	$ 1,190	$ 1,190	$ 1,505	$ 1,670
AG 0200	AG 0200	AG 0200	AG 0300	AG 0400	AG 0400	AG 0500	AG 0500	AG 0700	AG 0700	AG 0800	AG 1000
$ 495	$ 495	$ 495	$ 615	$ 815	$ 815	$ 1,010	$ 1,010	$ 1,190	$ 1,190	$ 1,505	$ 1,670
AG-Z 0125	AG-Z 0200	AG-Z 0200	AG-Z 0300	AG-Z 0450	AG-Z 0450	AG-Z 0450	AG-Z 600	AG-Z 600	AG-Z 900	AG-Z 900	AG-Z 1400
$ 260	$ 465	$ 465	$ 495	$ 495	$ 525	$ 525	$ 770	$ 770	$ 925	$ 925	$ 1,050
AG 0200	AG 0200	AG 0200	AG 0300	AG 0400	AG 0400	AG 0500	AG 0500	AG 0700	AG 0700	AG 0800	AG 1000
$ 495	$ 495	$ 495	$ 615	$ 815	$ 815	$ 1,010	$ 1,010	$ 1,190	$ 1,190	$ 1,505	$ 1,670
CP 0125	CP 0175	CP 0200	CP 0250	CP 0300	CP 0400	CP 0450	CP 0500	CP 0600	CP 0700	CP 0800	CP 1000
$ 2,905	$ 3,540	$ 4,120	$ 4,720	$ 5,110	$ 5,810	$ 6,565	$ 7,275	$ 8,505	$ 9,730	$ 10,285	$ 12,100
AG 0200	AG 0200	AG 0200	AG 0300	AG 0400	AG 0400	AG 0500	AG 0500	AG 0700	AG 0700	AG 0800	AG 1000
$ 495	$ 495	$ 495	$ 615	$ 815	$ 815	$ 1,010	$ 1,010	$ 1,190	$ 1,190	$ 1,505	$ 1,670
AG 0200	AG 0200	AG 0200	AG 0300	AG 0400	AG 0400	AG 0500	AG 0500	AG 0700	AG 0700	AG 0800	AG 1000
$ 495	$ 495	$ 495	$ 615	$ 815	$ 815	$ 1,010	$ 1,010	$ 1,190	$ 1,190	$ 1,505	$ 1,670
AG-Z 0125	AG-Z 0200	AG-Z 0200	AG-Z 0300	AG-Z 0450	AG-Z 0450	AG-Z 0450	AG-Z 600	AG-Z 600	AG-Z 900	AG-Z 900	AG-Z 1400
$ 260	$ 465	$ 465	$ 495	$ 495	$ 525	$ 525	$ 770	$ 770	$ 925	$ 925	$ 1,050
UP 0125	UP 0175	UP 0200	UP 0300	UP 0300	UP 0400	UP 0500	UP 0500	UP 0600	UP 0800	UP 0800	UP 1000
$ 6,325	$ 7,345	$ 8,060	$ 9,930	$ 9,930	$ 10,950	$ 12,645	$ 12,645	$ 14,695	$ 18,555	$ 18,555	$ 20,060
AG-Z 0125	AG-Z 0200	AG-Z 0200	AG-Z 0300	AG-Z 0300	AG-Z 0450	AG-Z 0450	AG-Z 600	AG-Z 600	AG-Z 900	AG-Z 900	AG-Z 1400
$ 260	$ 465	$ 465	$ 495	$ 495	$ 525	$ 525	$ 770	$ 770	$ 925	$ 925	$ 1,050
OFP 0125	OFP 0175	OFP 0200	OFP 0300	OFP 0300	OFP 0400	OFP 0500	OFP 0500	OFP 0600	OFP 0800	OFP 0800	OFP 1000
$ 13,000	$ 15,105	$ 17,245	$ 20,985	$ 20,985	$ 24,615	$ 28,575	$ 28,575	$ 33,570	$ 36,500	$ 36,500	$ 39,335
UFS-SP 150	UFS-SP 250	UFS-SP 250	UFS-SP 250	UFS-SP 500	UFS-SP 500	UFS-SP 500	UFS-SP 500	UFS-SP 1000	UFS-SP 1000	UFS-SP 1000	UFS-SP 1000
$ 625	$ 980	$ 980	$ 980	$ 1,210	$ 1,210	$ 1,210	$ 1,210	$ 1,625	$ 1,625	$ 1,625	$ 1,625

Operating pressure 100 psig. Design pressure 150 and 250 psig. Designed for use in tropical climates.

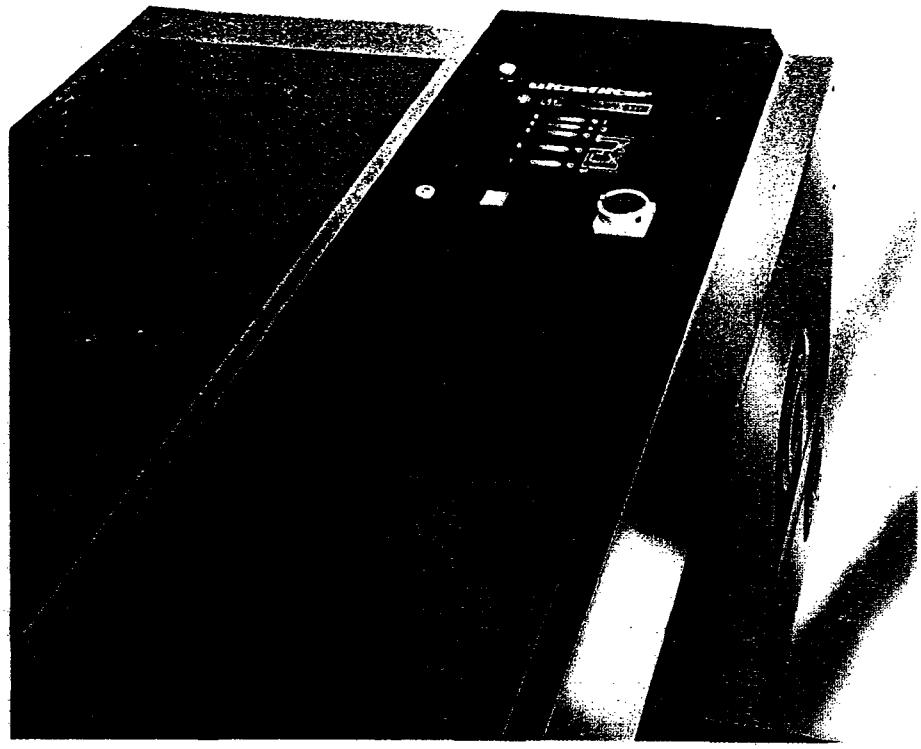

DRY COMPRESSED AIR.
ULTRATROC®.
THE FRIDGE DRYER.

Compressed Air Products
Electric Motors, Inc.
3300-F Rifle Range Road
Knoxville, TN 37918
(423) 688-6633
1-800-588-3778

Herman Sheridan

COMPRESSED AIR CAGI AND GAS INSTITUTE®

ultrafilter
ULTRAFILTER. AND MORE.

THE SMALLEST.
ULTRATROC® BURAN

In order to reduce the operating costs of using compressed air and gases, the right drying equipment is needed.
ultratroc® BURAN high-efficiency dryers can be used to dry all compressed air and gases with a pressure dew point higher than 122°F.

The new generation of ultratroc® high-efficiency dryers BURAN takes care of lower volume flows between 15 and 1.120 cfm and delivers dry compressed air.

The ultratroc®-BURAN fridge dryer is distinctive because of its unique low pressure drop, outstanding performance and low required energy.

This means for you: Reduction in energy and running costs.

And this repays in pounds and pence.

There are some advantages for the BURAN, e.g.:

- performance of the range:
  20 models with volume flows of 15 to 1,120 cfm
- proved concept of the TRISAB heat exchanger
- high energy reduction of up to 90%
- the considerable reduced quantity of refrigerant
- refrigerant R 134a,
  as standard in the entire series
- the compact construction of the BURAN-series
- the low pressure drop
- secure operation by performance regulation
- secure operation up to an environmental temperature of +122°F

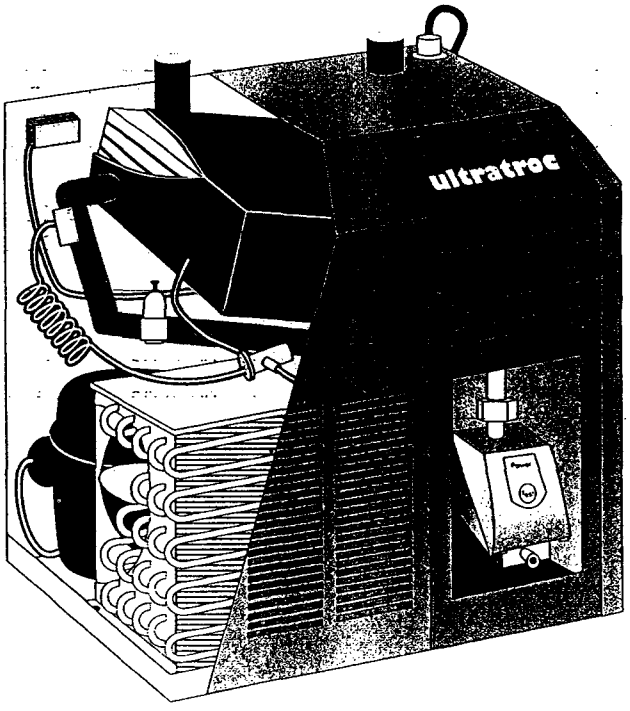

ALL
AT A GLANCE.

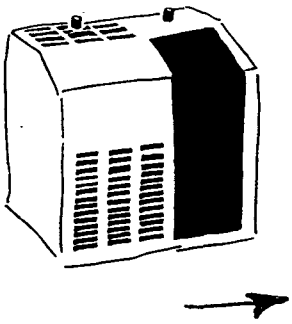

Buran	volume flow	weight	connection	dimensions in inches		
type	cfm	lb		height	width	depth
SD 0020	15	79	1/2"	21	23	17
SD 0030	20	87	1/2"	21	23	17
SD 0045	30	101	3/4"	21	23	17
SD 0060	40	106	3/4"	21	23	17
SD 0075	50	108	3/4"	21	23	17
SD 0090	60	114	1"	21	23	17
SD 0130	80	114	1"	21	23	17
SD 0170	120	117	1"	21	23	17
SD 0220	140	145	1"	25	23	23
SD 0260	170	158	1"	25	23	23
SD 0340	200	176	1 1/2"	25	23	23
SD 0410	260	209	1 1/2"	25	23	23
SD 0450	300	213	1 1/2"	25	23	23
SD 0630	400	334	2"	47	35	31
SD 0800	500	365	2"	47	35	31
SD 0980	600	374	2"	47	35	31
SD 1160	720	389	2 1/2"	47	35	31
SD 1330	840	396	2 1/2"	47	35	31
SD 1500	940	409	2 1/2"	47	35	31
SD 1680	1120	431	2 1/2"	47	35	31

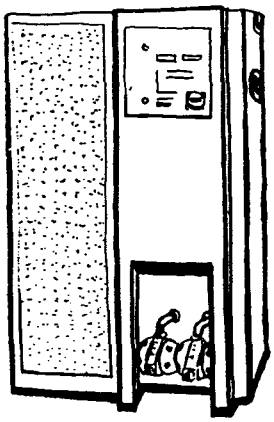

Boreas	volume flow	weight	connection	dimensions in inches		
type	cfm	lb		height	width	depth
SD 1800	1200	946	4"	74	47	49
SD 2200	1500	990	4"	74	47	49
SD 2600	1800	990	4"	74	47	49
SD 3900	2600	1342	6"	74	47	49
SD 5000	3400	1419	6"	74	47	49
SD 7000	4800	2222	8"	74	87	49
SD 8400	5600	2596	8"	74	87	49

QUALITY AIR PREPARATION EQUIPMENT

ARROW PNEUMATICS

Arrow Pneumatics

Arrow Pneumatics, Inc.
500 North Oakwood Road
Lake Zurich Illinois 60047

Voice: (847) 438-9100
Fax: (847) 438-7110
Internet: www.arrowpneumatics.com

FLUID POWER DISTRIBUTORS ASSOCIATION FPDA

NFPA

K2006
Revised 5 99

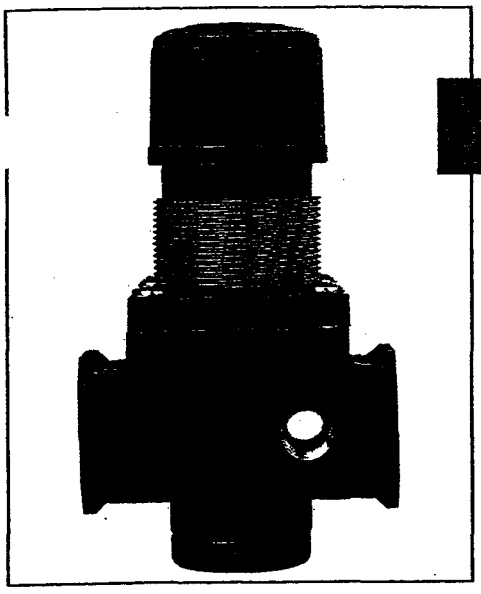

R37

FEATURES
- Micro finished brass seat to ensure no reduced pressure creep
- Reinforce diaphragm for repeated accuracy
- Minimal pressure droop due to efficient aspiration
- Three position non-rising adjustment knob; push to lock, pull to adjust, detach to make tamper resistant
- Relieving style standard
- Easily panel mounted Tamper-proof cap included
- High scfm flow due to efficient aspiration

OPTIONS
add suffix to part number in alpha order

G Gauge (0-160 psi) R373G
H High pressure R373H
0 to 250 psi adjustment
I Instrument pressure R373I
0 to 20 psi adjustment
L Low pressure R373L
0 to 60 psi adjustment
N Non-relieving R373N
P Panel mount R373P
Q Panel mount 9/16" bonnet ... R373Q
T Tee handle adjustment R373T

SPECIFICATIONS
Body
- Black coated aluminum

Bonnet
- Glass filled nylon

Seals
- Buna N Elastomer standard

Seat
- Brass

Supply Pressure
- 250 psig

Operating Pressure Range
- 0 to 125 psig

Operating Temperature Range
- 40°F to 120°

Gauge Port
- 1/4" full flow

KITS
Repair Kits
- Diaphragm kit relieving DK35
- Diaphragm kit Non-relieving DK35N
- Valve kit VK37

Mounting Kits see page 62
- Bracket kit RBK5
- Panel mounting kit ring only panel hole size 1 3/16" PKR35
- Panel mount bracket and ring PMKR35

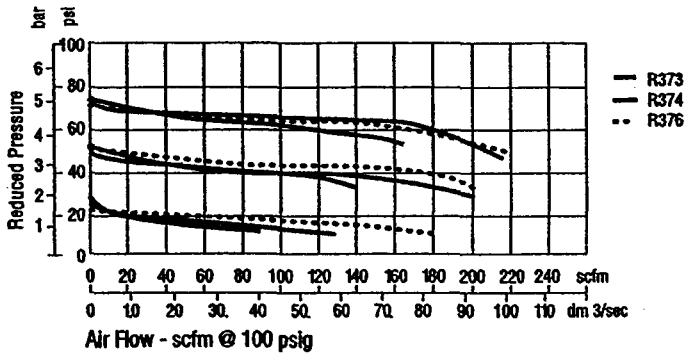

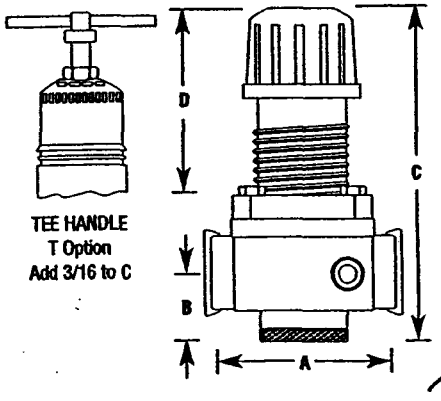

PIPE SIZE	MODEL NO.	MAX. FLOW SCFM	DIMENSIONS (INCHES) A	B	C	D	E (WIDTH)	WEIGHT (LBS.)
3/8"	R373	170	3 1/4	1 13/32	5 7/8	2 3/4	2 1/4	1.3
1/2"	R374	215	3 1/4	1 13/32	5 7/8	2 3/4	2 1/4	1.3
3/4"	R376	220	3 1/4	1 13/32	5 7/8	2 3/4	2 1/4	1.3

www.arrowpneumatics.com

Brackets & Accessories

Miniature Mounting Brackets

BR1611 Bracket & Ring
PK1611 Ring Only

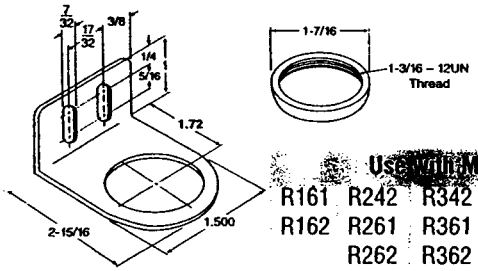

Use with Model #				
R161	R242	R342	7681	741
R162	R261	R361	7682	742
	R262	R362	7621	
			7622	

FBK5

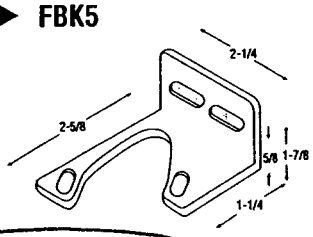

Use with Model #		
F352	L352	L452
F353	L353	L453
F354	L354	L454

RBK5

Mounting bracket for Tri•Star, Midflow, and precision regulators listed below. Also can be used for Tri-Star FRL Combination units.

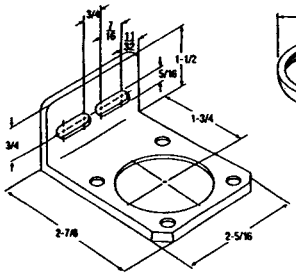

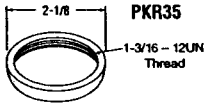

Use with Model #			
R352	R373	P10-02	P14-02
R353	R374	P10-03	P14-03
R354	R376		P14-04

ABK-10

Use with Model #
VC7510
VC7510XL
VC7525

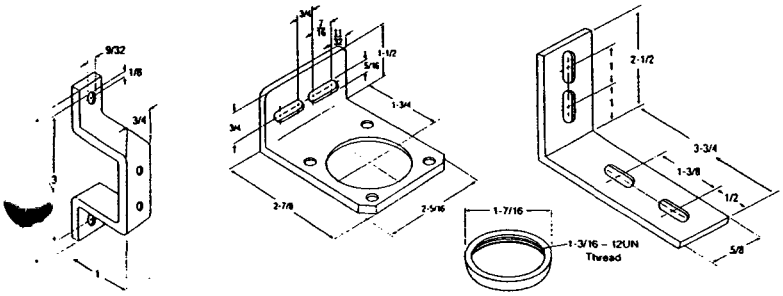

BR5702 Bracket

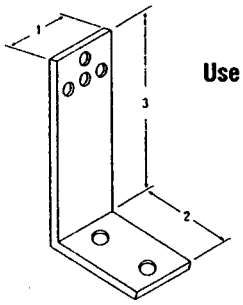

Use with Model #
5702S

FBK7 Midflow Brackets

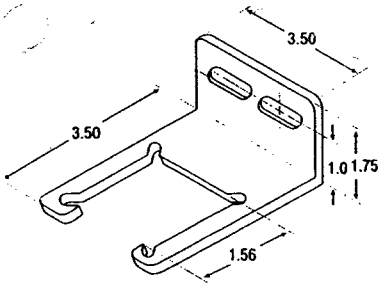

Use with Model #			
F373	F383	L373	L383
F374	F384	L374	L384
F376	F386	L376	L386

ACA Pipe Brackets

Mounting bracket for use with Tri-Star FRL's.
Example: N33354

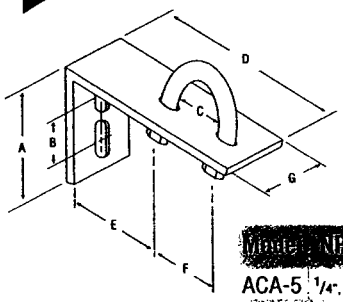

Model	NPT	A	B	C	D	E	F	G
ACA-5	1/4", 3/8"	2 1/2"	3/16"	3/4"	3 7/8"	2 1/16"	15/16"	5/8"
ACA-6	1/2", 3/4"	2 1/2"	3/16"	1 5/32"	3 7/8"	1 13/16"	1 5/16"	5/8"
ACA-7	1"	2 1/2"	3/16"	1 1/2"	3 7/8"	1 5/8"	1 11/16"	5/8"

Regulator Accessories

Arrow regulators may be panel mounted to improve machine design and overall appearance, they are convenient for control panel or console mounting.

Suffix Q Tri-Star & Midflow

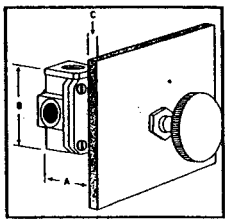

Suffix P Tri-Star & Midflow

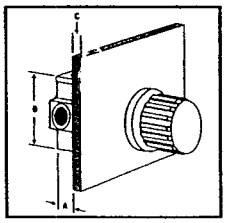

Suffix P (1500 Series Regulators)

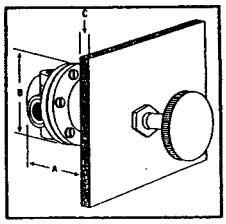

Panel Mounting Regulators

Regulator Model	Suffix for Panel Mt.	Panel Hole Size	Dimensions & Max. A	B	C
Tri-Star, Midflow & Precision Series	P	1 13/16"	1 1/4"	2 22/32"	1/2"
Tri-Star, Midflow & Precision Series	Q	9/16"	3 1/2"	2 23/32"	5/16"
1588	P	3/4"	5"	4 3/4"	1/4"

GAS-FIRED HEATERS

GRID Industrial Heating Inc.

for over *50* years!

Products

- Grid Products
- Vertical Heaters
- Horizontal Heaters

Horizontal Cast Iron Heat Transfers

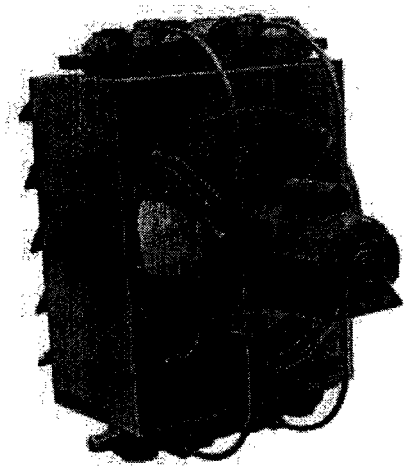

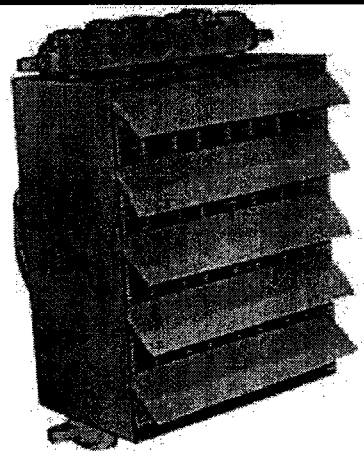

Heating Capacity Data Saturated Steam and Water

MODEL NO.	HP	CFM	2# STEAM BTU/HR	F.A.T.	150# STEAM BTU/HR	F.A.T.	250# STEAM BTU/HR	F.A.T.	210° WATER BTU/HR	FLOW	F.A.T.
Cl-H-315-08	1/8	1000	45298	102	87538	141	98868	152	33818	9 G.P.M.	91
Cl-H-315-04	¼	1550	62475	97	120573	133	136191	143	42795	9 G.P.M.	86
Cl-H-320-04	¼	1700	67991	96	131219	129	148220	139	52130	9 G.P.M.	89
Cl-H-420-02	½	2600	96404	93	186054	124	210155	133	70432	12 G.P.M.	86
Cl-H-425-02	½	2875	100243	91	193468	121	218526	128	76500	12 G.P.M.	84
Cl-H-525-02	½	3550	147257	100	284955	138	321013	148	89088	15 G.P.M.	84
Cl-H-525-10	1	4550	181390	97	350086	133	395428	143	114655	15 G.P.M.	81
Cl-H-530-10	1	4850	193754	97	373945	133	422378	143	114655	15 G.P.M.	83
Cl-H-630-10	1	6000	231831	95	447436	128	505390	137	137323	18 G.P.M.	81
Cl-H-630-20	2	8100	285511	92	551034	122	622413	130	169125	18 G.P.M.	80
Cl-H-1025-10	2	9000	307846	92	594154	122	671110	130	185414	30 G.P.M.	80
Cl-H-	2	11000	37475	92	723272	121	816959	130	254044	36	82

1230-10			4						G.P.M.	
CI-H-1230-20	4	15000	466686	89	900713116	1017390	124	312881	36 G.P.M.	80

Models CI-H-315-08 to CI-H-630-20

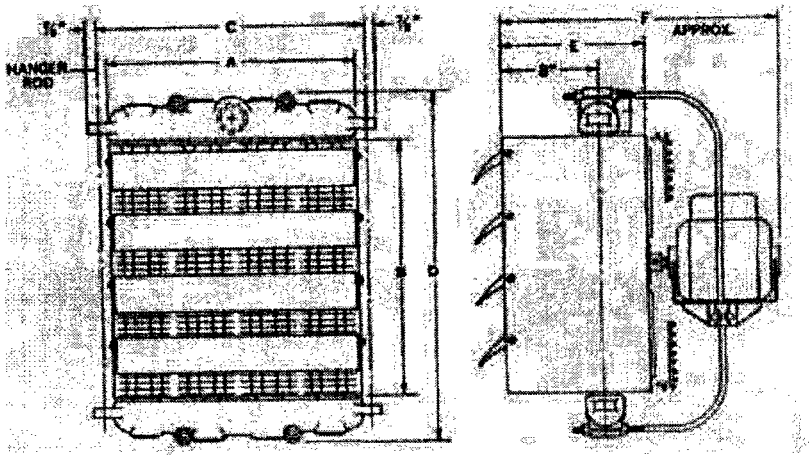

Heater Specifications

Model No.	Standard Motor HP-RPM	Face Area Sq. Ft.	DIMENSIONS A	B	C	D	E	F	Hanger Rod Dia.	Pipe Tapping Supply	Pipe Tapping Ret.	Shipping Wt.
CI-H-315-08	1/8-1140	1.72	15 3/8	16	17¼	24	12	20¼	½	1½	1½	300
CI-H-315-04	¼-1750	1.72	15 3/8	16	17¼	24	12	20¼	½	1½	1½	310
CI-H-320-04	¼-1750	2.26	15 3/8	21	17 ¼	29	12	20 ¼	½	1½	1½	395
CI-H-420-02	½-1140	3.01	20½	21	22 3/8	29	12	23¼	½	2	1½	490
CI-H-425-02	½-1140	3.72	20½	26	22 3/8	33 5/8	12	23¼	½	2	1½	610
CI-H-525-02	½-1140	4.65	25¾	26	27½	35	13	24½	5/8	2	1½	735
CI-H-525-10	1-1140	4.65	25¾	26	27½	35	13	24½	5/8	2	1½	745
CI-H-530-10	1-1140	5.54	25¾	31	27½	40	13	26½	5/8	2	1½	875
CI-H-	1-	6.65	30 7/8	31	32 5/8	40	13	26½	¾	2½	1½	1035

630-10	1140										
CI-H-630-20	2-1140	6.65	30 7/8	31	32 5/8	40	13	26½	¾	2½	1½	1075
CI-H-1025-10	1-1140	9.30	51 3/8	26	53 3/8	36	13	25¼	1 1/8	2½	1½	1475
CI-H-1230-10	1-1140	13.30	61 5/8	31	63 7/8	41	13	26½	1 1/8	2½	1½	2045
CI-H-1230-20	2-1140	13.30	61 5/8	31	63 7/8	41	13	26½	1 1/8	2½	1½	2120

Models CI-H-1025-10, CI-H-1230-10, and CI-H-1230-20

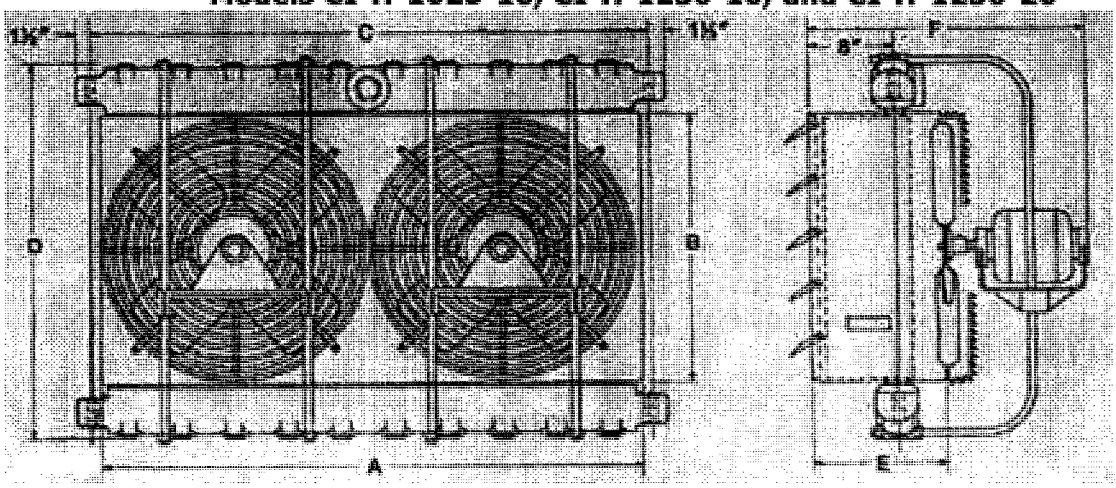

Physical Data of Fin Section

Section No.	15	20	25	30
Overall Length "L"	16 1/8	21 1/8	26 1/8	31 1/8
Approx. Net WT. #	65	80	95	110
Internal Heating Surface	2.42	3.15	4.01	4.77
External Heating Surface	13.33	17.95	21.17	25.50

BACK CONTACT

Howell is Hydronics.

Manufacturers' Representative/Consultation & System Design
119 E. King Street P.O. Box 1673 Johnson City, Tennessee 37605-1673
(CANADA, ALASKA, and Lower 48 States Please)
Phone: 1-800-929-8548 Fax: 1-800-929-9506
All others please call

Phone: 1-423-929-8548 Fax: 1-423-929-9506
General Information: info@hydronics.com

Copyright © 1997-2000 John D. Howell & Associates

Updated:Friday, October 12, 2001

John D. Howell & Associates are members of MANA(Manufacturers' Agents National Association).

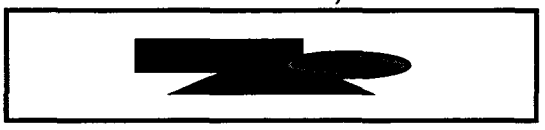

Questions or Comments?
webmaster@hydronics.com

Appendix F

Technical Specifications

PROJECT TABLE OF CONTENTS

DIVISION 01 - GENERAL REQUIREMENTS

01110 SUMMARY OF WORK
01320 PROJECT SCHEDULE
01330 SUBMITTAL PROCEDURES
01356 STORMWATER POLLUTION PREVENTION MEASURES
01410 ENVIRONMENT PROTECTION
01451 CONTRACTOR QUALITY CONTROL
01500 CONSTRUCTION FACILITIES AND TEMPORARY CONTROLS
01720 FIELD ENGINEERING
01780 CLOSEOUT SUBMITTALS

DIVISION 02 - SITE WORK

02230 CLEARING AND GRUBBING
02315 EXCAVATION, FILLING AND BACKFILLING FOR STRUCTURES
02316 EXCAVATION, TRENCHING, AND BACKFILLING FOR UTILITIES SYSTEMS
02531 SANITARY SEWERS
02556 GAS DISTRIBUTION SYSTEM
02769 PROTECTION AND MODIFICATION OF EXISTING UTILITIES

DIVISION 03 - CONCRETE

03100 STRUCTURAL CONCRETE FORMWORK
03150 EXPANSION JOINTS, CONTRACTION JOINTS, AND WATERSTOPS
03200 CONCRETE REINFORCEMENT
03300 CAST-IN-PLACE STRUCTURAL CONCRETE

DIVISION 04 - MASONRY

04200 MASONRY

DIVISION 05 - METALS

05120 STRUCTURAL STEEL
05500 MISCELLANEOUS METAL

DIVISION 07 - THERMAL & MOISTURE PROTECTION

07840 FIRESTOPPING
07900 JOINT SEALING

DIVISION 08 - DOORS & WINDOWS

08110 STEEL DOORS AND FRAMES
08330 OVERHEAD ROLLING DOORS
08510 STEEL WINDOWS
08700 BUILDERS' HARDWARE
08810 GLASS AND GLAZING

DIVISION 09 - FINISHES

09250 GYPSUM WALLBOARD
09510 ACOUSTICAL CEILINGS
09650 RESILIENT FLOORING
09900 PAINTING, GENERAL
09910 HIGH SOLIDS THIN FILM EPOXY FLOORING SYSTEM

09930 PROTECTIVE COATING SYSTEM (ALUM STORAGE AREA)

DIVISION 10 - SPECIALTIES

10201 METAL WALL LOUVERS
10430 EXTERIOR SIGNAGE
10440 INTERIOR SIGNAGE
10800 TOILET ACCESSORIES

DIVISION 11 - EQUIPMENT

11240 LIQUID-PHASE GRANULAR ACTIVATED CARBON ADSORPTION SYSTEM
11242 CHEMICAL FEED SYSTEMS
11310 PUMPS
11394 SAND FILTRATION SYSTEM
11395 POLISHING FILTRATION SYSTEM
11540 INCLINED PLATE CLARIFIER

DIVISION 13 - SPECIAL CONSTRUCTION

13120 STANDARD METAL BUILDING SYSTEMS
13405 PROCESS CONTROL
13850 FIRE DETECTION AND ALARM SYSTEM

DIVISION 15 - MECHANICAL

15050 BASIC MECHANICAL MATERIALS AND METHODS
15080 THERMAL INSULATION FOR MECHANICAL SYSTEMS
15190 GAS PIPING SYSTEMS
15200 PIPELINES, LIQUID PROCESS PIPING
15400 PLUMBING, GENERAL PURPOSE
15565 HEATING SYSTEM; GAS-FIRED HEATERS
15700 UNITARY HEATING AND COOLING EQUIPMENT
15760 TERMINAL HEATING AND COOLING UNITS
15895 AIR SUPPLY, DISTRIBUTION, VENTILATION, AND EXHAUST SYSTEM
15950 HEATING, VENTILATING AND AIR CONDITIONING (HVAC) CONTROL SYSTEMS
15990 TESTING, ADJUSTING, AND BALANCING OF HVAC SYSTEMS

DIVISION 16 - ELECTRICAL

16050 BASIC ELECTRICAL MATERIALS AND METHODS
16261 VARIABLE FREQUENCY DRIVE SYSTEMS UNDER 600 VOLTS
16415 ELECTRICAL WORK, INTERIOR
16510 INTERIOR LIGHTING

-- End of Project Table of Contents --

Appendix G

Cost Estimate

New Bedford Harbor - Water Treatment Plant, 100% Design

Designed By:	James Brinkman
Estimated By:	Lee Dilthey
Prepared By:	Foster Wheeler Environmental Corporation
Preparation Date:	6/3/02
Effective Date of Pricing:	6/3/02
Est Construction Time:	180

BSD CostLink/CM - Copyright © 1999-2002
by Building Systems Design, Inc.
Reports Version 3.1

Summary Reports	Summary Page
Owner Costs Summary Level 1	1
Owner Costs Summary	2

Detailed Estimate	Detail Page
HTRW REMEDIAL ACTION (CONSTRUCTION)	
Mobilization and Preparatory Work	
Submittals/Implementation Plans	1
Setup/Construction Temporary Facilities	1
Monitoring, Sampling, Testing and Analysis	
Laboratory Chemical Analysis	2
Site Work	
Demolition	3
Clearing and Grubbing	5
Earthwork	6
Electrical Distribution	7
Telephone/Communications Distribution	8
Water/Sewer/Gas Distribution	8
Effluent Discharge Piping	10
Clarifier Slurry Discharge Piping	11
Physical Treatment	
Construction of Permanent Plant Facility	11
Start-up and Testing	28
Disposal (Commercial)	
Transportation to Storage/Disposal Facility	30
Disposal Fees and Taxes	30
General Requirements	
Procurement	31
Engineering	31
Health and Safety	32
Fee	
	33

PROJECT BREAKDOWN:

The estimate is structured as follows and uses a 7 digit number at Level 1 (5197.24) and a 2 digit number at all remaining levels. The numbers for the first 3 title levels are taken from the Standard Interagency HTRW Remedial Action Work Breakdown Structure (RA-WBS). The 2 digit numbers for the remaining title levels are user defined. The detail items are at Level 6.

Level 1 - WBS Level 1 (Account)
Level 2 - WBS Level 2 (System)
Level 3 - WBS Level 3 (Subsystem)
Level 4 - User Defined (Assembly Category or Other)
Level 5 - User Defined (Assembly or Other)
Level 6 - Detail

SCHEDULE REQUIREMENTS:

Complete WTP testing and ready for operation: 30 June 2003.

PRODUCTIVITY:

Is based upon historical data and experience.

ESCALATION:

No escalation has been included for craft labor, materials and equipment rentals.

LABOR RATES:

Craft:
Labor rates are based upon Massachusetts Davis Bacon wage rate as per DOL General Decision Number MA020001, BUILDING , Modification Number 4 (Publication Date 05/03/2002) for Bristol County. Work schedule to be (4) 10 hour days/week. Rates have been weighted to reflect 0 hrs overtime/week (@ 1.5 x base rate). 40 hrs/week at straight time and 0 hrs/week at 1.5 x base rate.

EQUIPMENT RATES:

Hourly rental rates have been developed from monthly/weekly/daily equipment rental rates quoted. Fuel, FOG, Tire Wear and Tire Repair costs are based on published values in the USACE Construction Equipment Ownership & Operating Expense Schedule.

WEATHER IMPACTS:

No extreme weather impacts have been included in the estimate.

TAXES:

No Sales taxes have been included on equipment rental or permanent material purchases.

Foster Wheeler Environmental Corporation
New Bedford Harbor - Water Treatment Plant, 100% Design
Level 1 Owner Cost Summary
NE TERC Task Order No. 24

	Quantity	CONTRACT	CON CONT	Total	UnitCost
5197.24 HTRW REMEDIAL ACTION (CONSTRUCTION)	1 EA	**2,729,929**	**0**	**2,729,929**	2,729,929.00
Total for **New Bedford Harbor - Water Treatment Plant, 100% Design**		**2,729,929**	**0**	**2,729,929**	

		Quantity		CONTRACT	CON CONT	Total	UnitCost
5197.24 HTRW REMEDIAL ACTION (CONSTRUCTION)							
01 Mobilization and Preparatory Work							
03	Submittals/Implementation Plans	1	LOT	101,177	0	101,177	101,177.00
04	Setup/Construction Temporary Facilities	1	LS	3,498	0	3,498	3,498.00
Total for	Mobilization and Preparatory Work	1	LS	104,675	0	104,675	104,675.00
02 Monitoring, Sampling, Testing and Analysis							
09	Laboratory Chemical Analysis	1	EA	226,626	0	226,626	226,626.00
Total for	Monitoring, Sampling, Testing and Analysis	1	LS	226,626	0	226,626	226,626.00
03 Site Work							
01	Demolition	1	LS	35,445	0	35,445	35,445.00
02	Clearing and Grubbing	1	LS	6,215	0	6,215	6,215.00
03	Earthwork	1	LS	11,151	0	11,151	11,151.00
06	Electrical Distribution	1	LS	1,500	0	1,500	1,500.00
07	Telephone/Communications Distribution	1	LS	8,211	0	8,211	8,211.00
08	Water/Sewer/Gas Distribution	855	LF	13,176	0	13,176	15.41
90	Effluent Discharge Piping	145	LF	3,328	0	3,328	22.95
91	Clarifier Slurry Discharge Piping	300	LF	2,437	0	2,437	8.12
Total for	Site Work	1	LS	81,463	0	81,463	81,463.00
13 Physical Treatment							
50	Construction of Permanent Plant Facility	1	LS	1,765,043	0	1,765,043	1,765,043.00
90	Start-up and Testing	1	LS	172,184	0	172,184	172,184.00
Total for	Physical Treatment	1	LS	1,937,227	0	1,937,227	1,937,227.00
19 Disposal (Commercial)							
21	Transportation to Storage/Disposal Facility	1	LS	1,350	0	1,350	1,350.00
22	Disposal Fees and Taxes	1	LS	3,500	0	3,500	3,500.00

	Quantity		CONTRACT	CON CONT	Total	UnitCost
Total for Disposal (Commercial)	1	LS	4,850	0	4,850	4,850.00
22 General Requirements						
03 Procurement	1	LS	22,502	0	22,502	22,502.00
04 Engineering	1	LS	202,354	0	202,354	202,354.00
07 Health and Safety	1	LS	20,235	0	20,235	20,235.00
Total for General Requirements	1	LS	245,091	0	245,091	245,091.00
29 Fee						

A fixed fee of 5% was applied to total Project Cost from previous WBS elements.

5% Fee Calculation:

Total Project Cost $2,599,932

5% Fee = 5% x $2,599,932 = $129,997

Total for Fee	1	LS	129,997	0	129,997	129,997.00
Total for HTRW REMEDIAL ACTION (CONSTRUCTION)	1	EA	2,729,929	0	2,729,929	2,729,929.00
Total for New Bedford Harbor - Water Treatment Plant, 100% Design			2,729,929	0	2,729,929	

			CREWID	OUTPUT	Quantity	LABOR	EQUIPMNT	MATERIAL	UNITCOST	Total	UNITCOST
6197.24 HTRW REMEDIAL ACTION (CONSTRUCTION)											
01 Mobilization and Preparatory Work											
03 Submittals/Implementation Plans											

A number of project plans and documents will require amendments to cover the type of activities to take place under this Scope of Work. These plan amendments are:

1. *The Sampling and Analysis Plan (SAP).*
2. *The Site Safety and Health Plan (SSHP).*
3. *The Work Plan.*
4. *The Construction Quality Control Plan (CQCP).*
5. *The Transportation and Temporary Storage Plan (TTSP).*
6. *The Startup Plan.*
7. *The Operation and Maintenance Plan (O&M Manual).*

Allow 5% of the following Direct Cost for the above:

03.	*Site Work*	*$ 81,463*
13.	*Physical Treatment*	*1,937,227*
19.	*Disposal (Commercial)*	*4,850*
	Subtotal	*$2,023,540*

Cost @ 5% = $101,177

USR	Task00569	Submittals and Implementation Plans	0.00	1.00 LS	101,177	0	0	0	101,177	101,177.00
Total for Submittals/Implementation Plans				1 LOT	**101,177**	**0**	**0**	**0**	**101,177**	101,177.00
04 Setup/Construction Temporary Facilities										
30 Erosion Control										

This activity will include the cost to provide silt fence and hay bales as a temporary construction practice to minimize erosion and sediment runoff. These erosion and sediment control measures will be maintained in good and effective operating condition by performing routine inspections and repairs as needed.

The estimate assumes a total of 440 LF of silt fence. This includes an estimated 30 LF of silt fence for maintenance.

Productivity:

Installation:	*1 Shift*
Maintenance:	*.5 Shift for Project Duration (6 months))*
Removal:	*.5 Shift*

USR	Item000023	Ditchwitch	0.00	10.00 HR	0	195	0	0	195	19.50
USR	Task00119	Hay Bale	0.00	80.00 EA	0	0	400	0	400	5.00
USR	Task00120	Silt Fence	0.00	440.00 LF	0	0	660	0	660	1.50

			CREWID	OUTPUT	Quantity	LABOR	EQUIPMNT	MATERIAL	UNITCOST	Total	UNITCOST
NON	XMIXX020	SMALL TOOLS		0.00	60.00 HR	0	95	0	0	95	1.58
MIL	B-LABORER	Laborers, (Semi-Skilled), NBH WTP		0.00	40.00 HR	1,317	0	0	0	1,317	32.93
MIL	B-LABORER	Laborers, (Semi-Skilled), NBH WTP		0.00	10.00 HR	349	0	0	0	349	34.90
MIL	B-EQOPRMED	Equip. Operators, Medium		0.00	10.00 HR	482	0	0	0	482	48.20
Total for Erosion Control					440 LF	**2,148**	**290**	**1,060**	**0**	**3,498**	7.95
Total for Setup/Construction Temporary Facilities					1 LS	**2,148**	**290**	**1,060**	**0**	**3,498**	3,498.00
Total for Mobilization and Preparatory Work					1 LS	**103,325**	**290**	**1,060**	**0**	**104,675**	104,675.00

02 Monitoring, Sampling, Testing and Analysis
09 Laboratory Chemical Analysis
02 General Water Quality and Wastewater Analysis

Treatment process effluent samples will be analyzed for:
PCBs - Low Detection Limit (7 Aroclors)
Total Metals - Low Detection Limit (Cadmium, Copper, Chromium and Lead)
Dissolved Metals - Low Detection Limit (Cadmium, Copper, Chromium and Lead)
Total Suspended Solids (TSS)

Sample turnaround time will be requested at 48 hours during the first week and at 5 days during the second week.

Startup will include sampling for 14 days, resulting in a total of 196 samples.

Samples to be taken:
Clarifier Influent
Clarifier Effluent
Sand Filter Influent
Sand Filter Effluent
Polishing Filter Effluent
GAC Midpoint
GAC Effluent (WTP Discharge)

USR	Task00448	PCBs, 48 Hour Turnaround		0.00	98.00 EA	0	0	0	25,480	25,480	260.00
USR	Task00449	PCBs, 5 day Turnaround		0.00	98.00 EA	0	0	0	16,562	16,562	169.00
USR	Task00450	Total Metals, 48 Hour Turnaround		0.00	98.00 EA	0	0	0	53,900	53,900	550.00
USR	Task00451	Total Metals, 5 day Turnaround		0.00	98.00 EA	0	0	0	34,986	34,986	357.00
USR	Task00452	Dissolved Metals, 48 Hour Turnaround		0.00	98.00 EA	0	0	0	53,900	53,900	550.00
USR	Task00453	Dissolved Metals, 5 Day Turnaround		0.00	98.00 EA	0	0	0	34,986	34,986	357.00
USR	Task00454	TSS, 48 Hour Turnaround		0.00	98.00 EA	0	0	0	2,352	2,352	24.00
USR	Task00455	TSS, 5 Day Turnaround		0.00	98.00 EA	0	0	0	1,960	1,960	20.00
Total for General Water Quality and Wastewater Analysis					1 LS	**0**	**0**	**0**	**224,126**	**224,126**	224,126.00

06 Miscellaneous Waste Analysis

Carry 50 wipe samples to confirm effectiveness of the the decon effort (WBS element 5197.24.03.01).

			CREWID	OUTPUT	Quantity	LABOR	EQUIPMNT	MATERIAL	UNITCOST	Total	UNITCOST
USR	Task00426	Analyze Wipe Samples		0.00	50.00 EA	0	0	0	2,500	2,500	50.00
Total for Miscellaneous Waste Analysis					1 LS	**0**	**0**	**0**	**2,500**	**2,500**	2,500.00
Total for Laboratory Chemical Analysis					1 EA	**0**	**0**	**0**	**226,626**	**226,626**	226,626.00
Total for Monitoring, Sampling, Testing and Analysis					1 LS	**0**	**0**	**0**	**226,626**	**226,626**	226,626.00
03 Site Work											

	CREWID	OUTPUT	Quantity	LABOR	EQUIPMNT	MATERIAL	UNITCOST	Total	UNITCOST

01 Demolition

In order to support the construction and operation of the new water treatment facility, the interior of the existing water treatment plant will need to be demolished. The following equipment will be removed:

1. *Alum feed system.*
2. *Polymer feed system.*
3. *Polishing filters.*
4. *Polishing filter feed sump.*
5. *Polishing filter feed pumps.*
6. *Flocculation tanks.*
7. *Flocculation tank agitators.*
8. *Flocculation sludge transfer pump.*
9. *UV/oxidation system.*
10. *Composite sampler.*
11. *Air compressor.*
12. *Hydrogen peroxide feed system (including storage tank and feed pumps).*
13. *Associated curbing (with the exception of curbing being filled for equipment pad).*
14. *Process piping.*
15. *Power and control wiring (removed or terminated in-place).*
16. *Automatic Backwash Filter.*

Carry 2 shift to cut 10' wide x 10' high opening in existing Treatment Building for access from the new treatment building via a covered walkway.

Per notes on drawing M-101, existing process piping; power and control wiring; and concrete pads also have to be removed.

Existing Process Equipment, associated piping and interior building surfaces will be decontaminated prior to demolition. "Simple Green" or equivalent will be used to decontaminate the equipment/piping. Existing piping will be used to discharge waste liquids into CDF Cell #1. Carry 50 wipe samples to confirm effectiveness of the the decon effort.

Existing Equipment will be salvaged/disposed of by the Subcontractor. There is no credit for salvage and/or no cost for disposal since one is expected to offset the other.

Demolished process piping; power and control wiring; and concrete will be disposed as non-hazardous waste. See WBS elements 5197.24.19.21.01 and 5197.24.19.22.01.

Productivity:

Decon Exist Equip/Piping	*1 Week - Laborers*
Electrical Disconnects:	*2 days (Electricians).*
Equipment Removals	*2 Weeks (4 Millwrights).*
New Opening in Wall to Walkway	*2 days (4 Ironworkers).*

			CREWID	OUTPUT	Quantity	LABOR	EQUIPMNT	MATERIAL	UNITCOST	Total	UNITCOST
Balance of Demolition		*1 Week - Laborers*									
MIL	B-EQOPRMED	Equip. Operators, Medium		0.00	80.00 HR	3,853	0	0	0	3,853	48.16
MIL	F10CA018	FORK LIFT,YRD 20,000#,18.13'L-HT		0.00	80.00 HR	0	1,898	0	0	1,898	23.73
USR	Item000031	Demo Torch Set		0.00	20.00 HR	0	185	0	0	185	9.25
EP	A15XX004	AIR COMPR, 125 CFM, 100 PSI (ADD HOSES & ATTACHMENTS)		0.00	20.00 HR	0	109	0	0	109	5.45
UPB	A20GD005	PAVING BREAKER, 86 LB, AIR (ADD 50CFM COMPR & BIT COSTS)		0.00	40.00 HR	0	32	0	0	32	0.80
MAP	A20XX002	AIR HOSE. 1.00", 100',HARDROCK (USE AS DRILLING ACCESSORIES)		0.00	40.00 HR	0	13	0	0	13	0.33
USR	Task00363	Framing Steel for new opening to Covered Walkway, miscellaneous material to cut opening		0.00	1.00 LS	0	0	1,000	0	1,000	1,000.00
USR	Task00425	Simple Green, Buckets, Rags and other Decontamination Consumables		0.00	1.00 LS	0	0	100	0	100	100.00
2 B-millwrt + Misc Power Tools											
NON	XMIXX010	MISC. POWER TOOLS		0.00	320.00 HR	0	2,048	0	0	2,048	6.40
MIL	B-MILLWRT	Millwrights, NBH WTP		0.00	320.00 HR	13,800	0	0	0	13,800	43.13
End of 2 B-millwrt + Misc Power Tools											
2 B-electrn + Small Tools											
NON	XMIXX020	SMALL TOOLS		0.00	4.60 HR	0	7	0	0	7	1.52
MIL	B-ELECTRN	Electricians, NBH WTP		0.00	10.00 HR	451	0	0	0	451	45.10
MIL	B-ELECTRN	Electricians, NBH WTP		0.00	40.00 HR	1,725	0	0	0	1,725	43.13
End of 2 B-electrn + Small Tools											
2 B-laborer + Small Tools											
MIL	B-LABORER	Laborers, (Semi-Skilled), NBH WTP		0.00	80.00 HR	2,635	0	0	0	2,635	32.94
MIL	B-LABORER	Laborers, (Semi-Skilled), NBH WTP		0.00	20.00 HR	699	0	0	0	699	34.95
NON	XMIXX020	SMALL TOOLS		0.00	10.80 HR	0	17	0	0	17	1.57
End of 2 B-laborer + Small Tools											
4 B-strsteel + 1 200 Amp Welding Machine											
MIL	B-STRSTEEL	Structural Steel Workers, NBH WTP		0.00	20.00 HR	739	0	0	0	739	36.95
MIL	B-STRSTEEL	Structural Steel Workers, NBH WTP		0.00	40.00 HR	1,724	0	0	0	1,724	43.10
MIL	B-STRSTEEL	Structural Steel Workers, NBH WTP		0.00	20.00 HR	902	0	0	0	902	45.10
UPB	W35XX002	WELDER, 200 AMP, W/1 AXLE TRLR		0.00	20.00 HR	0	134	0	0	134	6.70
NON	XMIXX020	SMALL TOOLS		0.00	14.40 HR	0	23	0	0	23	1.60
End of 4 B-strsteel + 1 200 Amp Welding Machine											
2 B-laborer + Small Tools											
MIL	B-LABORER	Laborers, (Semi-Skilled), NBH WTP		0.00	80.00 HR	2,635	0	0	0	2,635	32.94
MIL	B-LABORER	Laborers, (Semi-Skilled), NBH WTP		0.00	20.00 HR	699	0	0	0	699	34.95
NON	XMIXX020	SMALL TOOLS		0.00	10.80 HR	0	17	0	0	17	1.57
End of 2 B-laborer + Small Tools											
Total for Demolition					1 LS	**29,862**	**4,483**	**1,100**	**0**	**35,445**	35,445.00

			CREWID	OUTPUT	Quantity	LABOR	EQUIPMNT	MATERIAL	UNITCOST	Total	UNITCOST
02 Clearing and Grubbing											

Under this subtask, the building subcontractor will clear and grub the areas within lines 25 feet outside the perimeter of the building footprint, removing brush, and other vegetation. Debris, including existing foundations, pavements, utility lines, structures, and other items that would interfere with construction operations will also be removed. The Estimate includes an additional day for a site crew to clear and grub the remainder of the site.

Off-site disposal of the material generated from the work performed under this subtask will be disposed as non-hazardous waste. See WBS elements 5197.24.19.21.01 and 5197.24.19.22.90.

Productivity:

Clear & Grub @ Building 1 day
Clear & Grub Balance of Site 1 day

5 B-laborer + 1 16" Chipper/1 3-3/4Cy,Cwlr Ldr

MAP	L35CA007	LDR,FE, CRWLR, 3.70 CY		0.00	20.00 HR	0	1,895	0	0	1,895	94.75
NON	XMIXX020	SMALL TOOLS		0.00	14.80 HR	0	23	0	0	23	1.55
MIL	B-EQOPRMED	Equip. Operators, Medium, NBH WTP		0.00	20.00 HR	963	0	0	0	963	48.15
MIL	B-LABORER	Laborers, (Semi-Skilled), NBH WTP		0.00	80.00 HR	2,635	0	0	0	2,635	32.94
MIL	B-LABORER	Laborers, (Semi-Skilled), NBH WTP		0.00	20.00 HR	699	0	0	0	699	34.95

End of 5 B-laborer + 1 16" Chipper/1 3-3/4Cy,Cwlr Ldr

Total for Clearing and Grubbing					1 LS	**4,297**	**1,918**	**0**	**0**	**6,215**	6,215.00

03 Earthwork

Provide 6" stone under all drains, sumps, footings and slabs.

Last 18" of Footer and Sump excavation to be vertical to serve as edge form .

Quantities:

Building	*2 spread footings, 90' x 3'* *2 spread footings, 75' x 3'*
Sump	*1 42' x 4' x3' deep sump*
Covered Walk	*2 Grade Beams @ 30' x 3' deep*
Remove Asphalt	*80' x 50' x 3" thick*

Quantities:

Excavation	*320 BCY*
6" Aggregate Under Footings	*25 CCY*
Other Backfill	*236 CCY*
Compact Subgrade	*785 SY*
6" Aggregate Under Slab	*132 CY*
Asphalt to be Removed	*40 CY*

			CREWID	OUTPUT	Quantity	LABOR	EQUIPMNT	MATERIAL	UNITCOST	Total	UNITCOST
AIR	022273001	Compaction by Vibratory Plate 8" Lifts	CLACE	16.25	261.00 CY	669	66	0	0	735	2.82
AIR	022273002	Compaction of Sub-Grade by Vibratory Plate, 8" Lifts	COFCR	1,670.00	75.00 CY	15	16	0	0	31	0.41
MIL	022211203	Trench 1/2 CY Hyd Exc, Hvy Soil 51 CY/Hr (40M3)/Hr	CODEA	40.00	320.00 CY	651	376	0	0	1,027	3.21
MIL	022215003	Backfill Trench w/Sm FEnd Loader Without Compaction	CODLF	45.00	261.00 CY	482	550	0	0	1,032	3.95
MIL	026111001	Crushed Stone Paving, Small Area Prepare and Roll Subbase	XSGRA	187.50	785.00 SY	1,049	438	322	0	1,809	2.30
MIL	026112001	Graded Crushed Agg Rdwy Base Crs	XSABA	31.25	132.00 CY	1,358	1,144	1,610	0	4,112	31.15
MIL	026131001	Cold Milling, Asph Pvmt, 3"Depth (2.5cm)Depth, Rem Surface Course	COKCG	600.00	444.00 SY	335	190	0	0	525	1.18
USR	Task00371	Engineer - Sub.		0.00	10.00 HR	0	0	0	750	750	75.00
USR	Task00372	Soil Testing - Gradation Test		0.00	3.00 EA	0	0	0	375	375	125.00
USR	Task00372	Soil Testing - Compaction Test		0.00	3.00 EA	0	0	0	450	450	150.00
USR	Task00519	Crushed Stone Bedding		0.00	25.00 CY	0	0	305	0	305	12.20
Total for Earthwork					1 LS	**4,559**	**2,780**	**2,237**	**1,575**	**11,151**	11,151.00

			CREWID	OUTPUT	Quantity	LABOR	EQUIPMNT	MATERIAL	UNITCOST	Total	UNITCOST
06 Electrical Distribution											
This subtask covers the cost to connect to existing 480 volt, 3 phase, 60 hertz electrical service at the site.											
Power from the existing WTP will be utilized for the new WTP. Power to be routed above ground through the Covered Walkway.											
USR	Task00233	New Connection to existing 480 volt, 3 phase, 60 hertz electrical service		0.00	1.00 LS	0	0	0	1,500	1,500	1,500.00
Total for Electrical Distribution					1 LS	**0**	**0**	**0**	**1,500**	**1,500**	1,500.00
07 Telephone/Communications Distribution											
02 Communication Systems											
Telephone service will be acquired for voice and data communications. In addition, a dedicated outside phone line will be provided for remote communication with the programmable logic controller (PLC).											
Provide 3 lines. New lines to run from street to new building in two 4" conduits encased in concrete.											
MIL	033111171	Pour Duct Bank by Direct Chute Type V Concrete	ALABE	18.75	15.00 CY	174	5	914	0	1,093	72.87
MIL	161113021	4"PVC Sch 40-EB Conduit w/Cplg Direct Burial, Conc Encased-Only	EELEC	22.63	700.00 LF	3,721	0	784	0	4,505	6.44
MIL	161113022	4"PVC Thinwall Elbow Direct Burial, Conc Encased-Only	EELEC	4.00	6.00 EA	180	0	85	0	265	44.17
USR	Task00235	Phone Services, Install		0.00	3.00 EA	0	0	0	750	750	250.00
USR	Task00519	Crushed Stone Bedding		0.00	8.00 CY	0	0	98	0	98	12.25
Total for Communication Systems					350 LF	**4,075**	**5**	**1,881**	**750**	**6,711**	19.17
03 Alarms											
The fire alarm system will be multi-zone, electronically operated, and electrically supervised. The system will include heat and smoke detectors, as well as dual-action manual pull stations.											
Alarm notification to the City of New Bedford Fire Department will be via a fire alarm system master box, hardwired to the fire department.											
Conduit is included in the previous WBS element (5197.24.03.07.02). Instruments are included with WBS element 5197.13.50.90.03.											
USR	Task00234	Hardwire to the City of New Bedford Fire Department via fire alarm system master box		0.00	1.00 LS	0	0	0	1,500	1,500	1,500.00
Total for Alarms					1 LS	**0**	**0**	**0**	**1,500**	**1,500**	1,500.00
Total for Telephone/Communications Distribution					1 LS	**4,075**	**5**	**1,881**	**2,250**	**8,211**	8,211.00

08 Water/Sewer/Gas Distribution

This subtask includes the cost to connect to existing water service (4-inch PVC water line) at the site, as well as the costs to bring in sewer and gas service from Sawyer Street to the water treatment plant.

Trenching for the utility systems (sewer and water) has also been included in this subtask assuming the following quantities:

Quantities:

6" Sewer 395' x 5.5' deep
4" Water 2 Pits 5' x 5' x 4' deep

Quantities:

Excavation 170 BCY
6" Stone Bedding 55 CCY

01 Water

Cut the existing 2" water service and install a blind flange.

Cut the existing 4" water service and bring up into new building.

			CREWID	OUTPUT	Quantity	LABOR	EQUIPMNT	MATERIAL	UNITCOST	Total	UNITCOST
USR	Task00241	Materials		0.00	1.00 LOT	0	0	500	0	500	500.00
AIR	022273001	Compaction by Vibratory Plate 8" Lifts	CLACE	16.25	8.00 CY	21	2	0	0	23	2.88
MIL	022211203	Trench 1/2 CY Hyd Exc, Hvy Soil 51 CY/Hr (40M3)/Hr	CODEA	40.00	8.00 CY	16	9	0	0	25	3.13
MIL	022215003	Backfill Trench w/Sm FEnd Loader Without Compaction	CODLF	45.00	8.00 CY	15	17	0	0	32	4.00
1 B-plumber/laborer + Small Tools											
NON	XMIXX020	SMALL TOOLS		0.00	6.70 HR	0	11	0	0	11	1.64
MIL	B-LABORER	Laborers, (Semi-Skilled), NBH WTP		0.00	10.00 HR	329	0	0	0	329	32.90
MIL	B-PLUMBER	Plumbers, NBH WTP		0.00	10.00 HR	369	0	0	0	369	36.90
MIL	B-PLUMBER	Plumbers, NBH WTP		0.00	5.00 HR	194	0	0	0	194	38.80
End of 1 B-plumber/laborer + Small Tools											
Total for Water					1 LS	**944**	**39**	**500**	**0**	**1,483**	1,483.00
02 Sewer											
MIL	025604022	Trpl Channel Conc Invert for MH	AMABD	0.38	1.00 EA	235	1	70	0	306	306.00
MIL	025605202	4'Dia x 6'Deep Precast Manhole 8"(20cm)Tk, (1.2M)Dia x (1.8M)Dp	CODEJ	0.38	1.00 EA	327	56	344	0	727	727.00
MIL	055402103	24"D x 400 # Reg Manhole Cover (61cm)Dx(181kg)w/Frame,City Type	CODEJ	0.98	1.00 EA	126	22	227	0	375	375.00
USR	Task00253	6" SDR 35 PVC Pipe		0.00	395.00 LF	0	0	2,370	0	2,370	6.00

			CREWID	OUTPUT	Quantity	LABOR	EQUIPMNT	MATERIAL	UNITCOST	Total	UNITCOST
USR	Task00254	6" 45 Degree Elbow, SDR 35 PVC		0.00	1.00 EA	0	0	35	0	35	35.00
USR	Task00255	6" Cleanout		0.00	1.00 EA	0	0	75	0	75	75.00
AIR	022273001	Compaction by Vibratory Plate 8" Lifts	CLACE	16.25	240.00 CY	615	60	0	0	675	2.81
MIL	022211203	Trench 1/2 CY Hyd Exc, Hvy Soil 51 CY/Hr (40M3)/Hr	CODEA	40.00	240.00 CY	488	282	0	0	770	3.21
MIL	022215003	Backfill Trench w/Sm FEnd Loader Without Compaction	CODLF	45.00	240.00 CY	443	506	0	0	949	3.95
USR	Task00519	Crushed Stone Bedding		0.00	22.00 CY	0	0	268	0	268	12.18
2 B-laborer + 1 Loader/Backhoe											
MIL	B-EQOPRMED	Equip. Operators, Medium, NBH WTP		0.00	12.00 HR	578	0	0	0	578	48.17
MIL	B-LABORER	Laborers, (Semi-Skilled), NBH WTP		0.00	3.00 HR	105	0	0	0	105	35.00
MIL	B-LABORER	Laborers, (Semi-Skilled), NBH WTP		0.00	24.00 HR	790	0	0	0	790	32.92
EP	L50CA003	LDR,BH,WH, 1.38CY FE BKT, 30"DIP		0.00	12.00 HR	0	252	0	0	252	21.00
NON	XMIXX020	SMALL TOOLS		0.00	1.56 HR	0	2	0	0	2	1.28
End of 2 B-laborer + 1 Loader/Backhoe											
Total for Sewer					395 LF	**3,707**	**1,181**	**3,389**	**0**	**8,277**	20.95
05 Gas											
USR	Task00001	New Gas Service by Local Utility (NSTAR Gas Company)		0.00	460.00 LF	0	0	0	2,300	2,300	5.00
AIR	022273001	Compaction by Vibratory Plate 8" Lifts	CLACE	16.25	85.00 CY	218	21	0	0	239	2.81
MIL	022211203	Trench 1/2 CY Hyd Exc, Hvy Soil 51 CY/Hr (40M3)/Hr	CODEA	40.00	85.00 CY	173	100	0	0	273	3.21
MIL	022215003	Backfill Trench w/Sm FEnd Loader Without Compaction	CODLF	45.00	85.00 CY	157	179	0	0	336	3.95
USR	Task00519	Crushed Stone Bedding		0.00	22.00 CY	0	0	268	0	268	12.18
Total for Gas					460 LF	**548**	**300**	**268**	**2,300**	**3,416**	7.43
Total for Water/Sewer/Gas Distribution					855 LF	**5,199**	**1,520**	**4,157**	**2,300**	**13,176**	15.41

90 Effluent Discharge Piping

Effluent discharge piping consisting of a new buried 10-inch line connecting the new water treatment facility to the existing 10-inch discharge (Drawing C-103) line will be installed by the subcontractor. For the anticipated initial treatment process flow rate of 700 gpm, the existing 10-inch outfall piping will be sufficient. If the required water treatment capacity is expected to exceed 700 gpm, a new outfall would be required.

Quantities:

10" Discharge Piping *145' x 3' deep*

USR	Task00266	10" PVC Pipe		0.00	145.00 LF	0	0	2,175	0	2,175	15.00
AIR	022273001	Compaction by Vibratory Plate 8" Lifts	CLACE	16.25	48.00 CY	123	12	0	0	135	2.81

			CREWID	OUTPUT	Quantity	LABOR	EQUIPMNT	MATERIAL	UNITCOST	Total	UNITCOST
MIL	022211203	Trench 1/2 CY Hyd Exc, Hvy Soil 51 CY/Hr (40M3)/Hr	CODEA	40.00	48.00 CY	98	56	0	0	154	3.21
MIL	022215003	Backfill Trench w/Sm FEnd Loader Without Compaction	CODLF	45.00	48.00 CY	89	101	0	0	190	3.96
USR	Task00519	Crushed Stone Bedding		0.00	8.00 CY	0	0	98	0	98	12.25
2 B-laborer + 1 Loader/Backhoe											
MIL	B-EQOPRMED	Equip. Operators, Medium, NBH WTP		0.00	4.00 HR	193	0	0	0	193	48.25
MIL	B-LABORER	Laborers, (Semi-Skilled), NBH WTP		0.00	1.00 HR	35	0	0	0	35	35.00
MIL	B-LABORER	Laborers, (Semi-Skilled), NBH WTP		0.00	8.00 HR	263	0	0	0	263	32.88
EP	L50CA003	LDR,BH,WH, 1.38CY FE BKT, 30"DIP		0.00	4.00 HR	0	84	0	0	84	21.00
NON	XMIXX020	SMALL TOOLS		0.00	0.52 HR	0	1	0	0	1	1.92
End of 2 B-laborer + 1 Loader/Backhoe											
Total for Effluent Discharge Piping					145 LF	**801**	**254**	**2,273**	**0**	**3,328**	22.95

91 Clarifier Slurry Discharge Piping

Slurry from the sludge holding tank will be pumped approximately 300 feet to the sediment desanding facility to be located on the Debris Disposal Area (DDA) at Sawyer Street (Drawing C-103). The discharge line will consist of 4-inch PVC piping and will be routed aboveground, north of CDF Cell #1, to a termination point at the northwest corner of the DDA.

MIL	150645119	4" Sch 40 PVC Press Pipe Socket Weld	MPLUE	15.50	300.00 LF	1,728	20	582	0	2,330	7.77
MIL	150645159	4" 45 Degree Elbow, PVC Sch 40 Socket Weld	MPLUE	2.00	2.00 EA	89	1	17	0	107	53.50
Total for Clarifier Slurry Discharge Piping					300 LF	**1,817**	**21**	**599**	**0**	**2,437**	8.12
Total for Site Work					1 LS	**50,610**	**10,981**	**12,247**	**7,625**	**81,463**	81,463.00

13 Physical Treatment
50 Construction of Permanent Plant Facility
01 Substructure

The subcontractor will be required to provide the design of the building foundation system, inclusive of the foundation for the covered walkway. The design will be completed in accordance with the appropriate technical specifications and design drawings. The geotechnical subsurface criteria necessary for the foundation design, including allowable soil bearing capacity and subgrade information, will be provided to the subcontractor. The foundation design will include all details and dimensions required for the proper construction of the complete foundation system, including, but not limited to, reinforcing steel, frost walls, column footings, openings for utilities and process piping, the floor slab and equipment pads. The design will include 6-inch curbing and will allow for the floor slab to slope to a central floor drain which will lead to a 5-foot by 5-foot, 3-foot-deep substructure sump pit. Liquid waste collected in the sump pit will be pumped to the sludge holding tank through a 2-inch diameter pipe situated below the floor slab. Power to the sump pump will be provided through a ½-inch conduit situated below the floor slab.

			CREW	ID OUTPUT	Quantity	LABOR	EQUIPMNT	MATERIAL	UNITCOST	Total	UNITCOST
01 Footings											

This WBS includes the Continuous Footing under the perimeter wall of the building (90' x 75'). Use 3' wide x 1' high with 2" x 4" Keyway. Last 18" of excavation to be vertical so that no formwork will be required.

The Trench Sump in the center of the new Treatment Building is also included in this WBS. Use 40' long x 2' wide x 1' deep with 2" x 4" Keyway. Last 18" of excavation to be vertical so that no formwork will be required.

At one end of the Trench Sump, there is 5' x 5' x 3' Sump.

Reinforcing steel estimated at 100 lbs/CY.

There are no interior columns

There are no footings under the covered walkway.

MIL	032101003	Gr 60 Resteel,Ftgs & Slabs,#3-#6	SIWRC	0.31	2.13 TON	1,189	7	1,184	0	2,380	1,117.37
MIL	031103201	2x4 Keyway Forms, 4 Uses	ACARL	66.25	418.00 LF	1,230	21	63	0	1,314	3.14
MIL	032531006	Wtrstop,Dumbbell PVC,3/8"T x 6"W	ACARL	18.13	88.00 LF	946	16	142	0	1,104	12.55
MIL	033111123	Pour Cont Ftgs,Shlw,Direct Chute Place 3000 PSI Conc Foundations	ALABE	15.00	42.60 CY	617	19	2,596	0	3,232	75.87
MIL	033114202	Wall Finishes, 1/16"Float Finish	ACMAA	37.50	1,150.00 SF	1,956	6	46	0	2,008	1.75
MIL	033051004	Conc Curing, Sprayed Membrane Curing Compound	ULABB	11.88	11.50 CSF	81	0	48	0	129	11.22
Total for Footings					43 CY	**6,019**	**69**	**4,079**	**0**	**10,167**	238.66

02 Frost Walls and Grade Beams

Provide a 3' high x 1' wide wall on the footing around the perimenter of the building. Provide four 9" x9" pilasters at the corners and six 9" x 18" interior pilaster around the perimeter at the building columns. Provide 4 anchor bolts at each column.

Provide a 1.5' high x 1' wall on the slab under the trench drain in the center of the building.

Provide a 3' high x 1' wide wall under the covered walkway. Provide 4 anchor bolts at each of 4 columns for the covered walkway.

MIL	032101003	Gr 60 Resteel,Ftgs & Slabs,#3-#6	SIWRC	0.31	2.34 TON	1,306	8	1,301	0	2,615	1,117.52
MIL	033114202	Wall Finishes, 1/16"Float Finish	ACMAA	37.50	441.00 SF	750	2	18	0	770	1.75
MIL	033051004	Conc Curing, Sprayed Membrane Curing Compound	ULABB	11.88	29.43 CSF	207	1	123	0	331	11.25
MIL	031101201	Grade Beam Forms, 1 Use Plywd Forms, Form & Strip w/Acc	ACARL	55.63	2,466.00 SF	8,642	146	3,650	0	12,438	5.04
MIL	055011002	1/2"D x 12"L, J-Type Anchor Bolt (31cm Long)w/Nut,Washer,Template	ACARB	8.13	56.00 EA	722	7	85	0	814	14.54

			CREWID	OUTPUT	Quantity	LABOR	EQUIPMNT	MATERIAL	UNITCOST	Total	UNITCOST
MIL	031101501	Clmn,Pier & Pilaster Form, 1 Use (Below Gr) Plywd Forms,F&S w/Acc	ACARL	28.13	45.00 SF	312	5	99	0	416	9.24
MIL	033111123	Pour Cont Ftgs,Shlw,Direct Chute Place 3000 PSI Conc Foundations	ALABE	15.00	46.70 CY	677	21	2,845	0	3,543	75.87
CIV	031101665	Slab Block-Out Form,1 Use to 12"	ACARI	25.00	330.00 LF	1,673	10	195	0	1,878	5.69
4 B-carpnter + Small Tools - Install Embedded Fram											
NON	XMIXX020	SMALL TOOLS		0.00	11.40 HR	0	18	0	0	18	1.58
MIL	B-CARPNTER	Carpenters, NBH WTP		0.00	20.00 HR	830	0	0	0	830	41.50
MIL	B-CARPNTER	Carpenters, NBH WTP		0.00	10.00 HR	435	0	0	0	435	43.50
MIL	B-CARPNTER	Carpenters, NBH WTP		0.00	10.00 HR	356	0	0	0	356	35.60
End of 4 B-carpnter + Small Tools - Install Embedded Fram											
	Total for Frost Walls and Grade Beams				46 CY	**15,910**	**218**	**8,316**	**0**	**24,444**	534.88
	03 Slab-on-Grade										
	Provide a 6" thick, rebar reinforced concrete slab inside the building.										
	Provide a 6" thick, rebar reinforced concrete slab for the covered walkway.										
MIL	032101003	Gr 60 Resteel,Ftgs & Slabs,#3-#6	SIWRC	0.31	6.38 TON	3,560	22	3,548	0	7,130	1,117.55
MIL	033051004	Conc Curing, Sprayed Membrane Curing Compound	ULABB	11.88	68.90 CSF	483	2	287	0	772	11.20
MIL	031103201	2x4 Keyway Forms, 4 Uses	ACARL	66.25	121.00 LF	356	6	18	0	380	3.14
MIL	033111161	Pour Slab on Gr,< 6",Crane & Bkt < (15 cm) Place 3000 PSI Conc	ALABG	13.75	127.60 CY	3,106	775	7,775	0	11,656	91.35
MIL	032512003	Cork Expan Jnt w/Resin, 1/2"x 6" Premolded in Slabs	ACARL	46.88	418.00 LF	1,738	29	644	0	2,411	5.77
MIL	033114101	Concrete Floor Finishes, Screed	ACMAA	112.50	6,890.00 SF	3,907	12	0	0	3,919	0.57
MIL	033114103	Conc Floor Finishes, Final Float	ACMAC	90.63	3,990.00 SF	2,461	72	0	0	2,533	0.63
CIV	055302303	HD Trench Drain Grate,24"Trench Welded Steel Grating	ACARL	12.50	40.00 LF	624	11	1,790	0	2,425	60.63
MIL	071115003	10 Mil Polyeth Vapor Barrier	ACARA	2.00	68.90 CSF	1,804	17	464	0	2,285	33.16
	Total for Slab-on-Grade				128 CY	**18,039**	**946**	**14,526**	**0**	**33,511**	262.63

			CREWID	OUTPUT	Quantity	LABOR	EQUIPMNT	MATERIAL	UNITCOST	Total	UNITCOST
	04 Equipment Pads										

Provide in existing Building:

for Sand Filter 2 @ 24' x 10'.
for Clarifier Feed Pumps 1 @ 16'-6" x 6'-9".
for Filtration Pumps 1 @ 10' x 20'.

Provide in new Building:

for Polishing Filters 1 @ 15' x 5'.
for Polishing Filters 1 @ 10' x 5'.
for GAC Systems 3 @ 25'-6" x 12'.
for sludge Holding Tank 1 @ 12' x 15' with 6" curb.
for Inclined Plate Clarifier 1 @ 34' x 12'-3".
for Alum Storage Tank 1 @ 16' x 13' with 6" curb.

No Anchor Bolts. Use Expansion Anchors. See WBS element 24.13.50.90.

MIL	033114101	Concrete Floor Finishes, Screed	ACMAA	112.50	2,895.00 SF	1,642	5	0	0	1,647	0.57
MIL	032101003	Gr 60 Resteel,Ftgs & Slabs,#3-#6	SIWRC	0.31	2.68 TON	1,496	9	1,490	0	2,995	1,117.54
MIL	033051004	Conc Curing, Sprayed Membrane Curing Compound	ULABB	11.88	36.57 CSF	257	1	152	0	410	11.21
MIL	033111161	Pour Slab on Gr,< 6",Crane & Bkt < (15 cm) Place 3000 PSI Conc	ALABG	13.75	53.60 CY	1,305	326	3,266	0	4,897	91.36
MIL	031101651	Pad Foundation Forms, 1 Use	ACARL	20.00	381.00 SF	3,714	63	869	0	4,646	12.19
MIL	031103411	Wood Chamfer Strips, 1/2" Wide	ACARL	1.25	7.62 CLF	1,188	20	92	0	1,300	170.60
	Total for Equipment Pads				54 CY	**9,602**	**424**	**5,869**	**0**	**15,895**	296.55
	05 Curbs										
MIL	033051004	Conc Curing, Sprayed Membrane Curing Compound	ULABB	11.88	4.48 CSF	31	0	19	0	50	11.16
AIR	031103701	Elevated Slab Edge Form 6"-12" - 1 Use	ACARL	31.25	225.00 SF	1,404	24	113	0	1,541	6.85
MIL	031103411	Wood Chamfer Strips, 1/2" Wide	ACARL	1.25	2.25 CLF	351	6	27	0	384	170.67
MIL	033114202	Wall Finishes, 1/16"Float Finish	ACMAA	37.50	224.00 SF	381	1	9	0	391	1.75
	Total for Curbs				225 LF	**2,167**	**31**	**168**	**0**	**2,366**	10.52

06 Guard Posts

Provide one Guardpost either side of the two Overhead Doors - a total of 4 Guardposts.

Productivity - 1/2 Shift/Guardpost.

USR	Task00558	Concrete		0.00	2.00 CY	0	0	122	0	122	61.00
USR	Task00559	6" Galv Steel Pipe, ASTM A-53, Sch 40		0.00	28.00 LF	0	0	560	0	560	20.00

2 B-laborer + 1 Loader/Backhoe

			CREWID	OUTPUT	Quantity	LABOR	EQUIPMNT	MATERIAL	UNITCOST	Total	UNITCOST
MIL	B-EQOPRMED	Equip. Operators, Medium, NBH WTP		0.00	16.00 HR	771	0	0	0	771	48.19
MIL	B-LABORER	Laborers, (Semi-Skilled), NBH WTP		0.00	4.00 HR	140	0	0	0	140	35.00
MIL	B-LABORER	Laborers, (Semi-Skilled), NBH WTP		0.00	32.00 HR	1,054	0	0	0	1,054	32.94
EP	L50CA003	LDR,BH,WH, 1.38CY FE BKT, 30"DIP		0.00	16.00 HR	0	336	0	0	336	21.00
NON	XMIXX020	SMALL TOOLS		0.00	2.08 HR	0	3	0	0	3	1.44
End of 2 B-laborer + 1 Loader/Backhoe											
	Total for Guard Posts				4 EA	**1,965**	**339**	**682**	**0**	**2,986**	746.50
	90 Epoxy Floor Coatings										
	01 Process Areas										
	In the new Building (90' x 75', 6,750 SF floor area), all floors to recive 2 coats of Tnemec Series 201 Epoxoprime, 6 to 12 mil dry film thickness per coat. In the existing building, at the new pads, an additional 700 SF will receive Series 201 Epoxoprime.										
USR	Task00560	Surface Preparation		0.00	7,450.00 SF	6,556	894	0	0	7,450	1.00
USR	Task00561	Epoxy Application, per coat, 6 to 12 mil dry film thickness per coat		0.00	14,900.00 SF	13,112	1,788	0	0	14,900	1.00
USR	Task00562	Tnemec Series 201 Epoxoprime, 6 to 12 mil dry film thickness per coat		0.00	14,900.00 SF	0	0	3,278	0	3,278	0.22
	Total for Process Areas				7,450 SF	**19,668**	**2,682**	**3,278**	**0**	**25,628**	3.44
	02 Alum Storage Area										
	In the Alum Storage Area, provide 2 coats of Tnemec Series 104 H.S. Epoxy, 6 to 10 mil dry film thickness per coat in addition to the 2 coats of Tnemec Series 201 Epoxoprime (see previous WBS element for costs).										
USR	Task00560	Surface Preparation		0.00	285.00 SF	251	34	0	0	285	1.00
USR	Task00561	Epoxy Application, per coat, 6 to 12 mil dry film thickness per coat		0.00	570.00 SF	502	68	0	0	570	1.00
USR	Task00566	Tnemec Series 104 H.S. Epoxy, 6 to 10 mil dry film thickness per coat		0.00	570.00 SF	0	0	114	0	114	0.20
	Total for Alum Storage Area				285 SF	**753**	**102**	**114**	**0**	**969**	3.40
	Total for Epoxy Floor Coatings				7,735 SF	**20,421**	**2,784**	**3,392**	**0**	**26,597**	3.44
	Total for Substructure				270 CY	**74,123**	**4,811**	**37,032**	**0**	**115,966**	430.30

			CREWID	OUTPUT	Quantity	LABOR	EQUIPMNT	MATERIAL	UNITCOST	Total	UNITCOST

02 Superstructure

The new water treatment facility will be oriented to the west of the existing water treatment facility and will consist of a 90' x 75' pre-engineered metal building with steel framing and a metal gable roof and vertical wall panels. The roof slope will be ½:12 (vertical to horizontal). The building framing will be rigid frame type providing a clear interior span. The building will be complete and weather-tight and suitable for its functional requirements. The building plan dimensions will be as provided by the building manufacturer's standard, but not less than the dimensions indicated on the drawings, nor exceeding the indicated dimensions by more than the amount of the closest standard size thereto. The inside clear height between the finished floor and the bottom of roof steel will be a minimum of 25 feet as indicated on the drawings. Roof insulation will be R-19 and wall insulation will be R-11. A covered walkway will connect the existing treatment facility to the new facility.

In addition to the major aspects of the superstructure, the pre-engineered metal building will include the following physical features:

1. *Three (3) rooms (process room, control room, bathroom)*
2. *One (1) covered walkway (10' wide x 8' high x 20' long)*
3. *Two (2) overhead rolling doors (both 15' wide x 25' high)*
4. *Three (3) exterior single steel doors (3' wide x 7' high)*
5. *Two (2) interior single steel doors (3' wide x 7' high)*
6. *Three (3) exterior steel windows (one 3' x 3', two 3' high x 5' wide)*
7. *One (1) interior steel window (3' high x 5' wide) in the control room*
8. *Ten (10) roof openings (two 2' diameter, six 4" diameter, two 2" diameter)*

Doors and frames will be hollow metal and insulated. Where doors lead into spaces that are curbed for containment, ramps will be provided at the door. Each component of the work is further described and detailed in the appropriate technical specifications and design drawings. The subcontractor will install and properly seal all louvers and roof openings once the design is finalized. In addition, the subcontractor will cut and properly seal all scheduled openings through the building walls to accommodate process pipe, electrical conduit, and other utility penetrations.

MIL	081101004	3'x7'x6-3/4"DP Steel Door Frame 16 Ga Frame for 1-3/4"Door	ACARL	1.20	3.00 EA	487	8	236	0	731	243.67
MIL	081103204	3'x 7'x 1-3/4"x 18Ga Metal Door (Unrated)	ACARL	3.00	3.00 EA	195	3	641	0	839	279.67
MIL	085101103	Industrial Window,Opr Secur Sash Steel	AGLAB	25.00	9.00 SF	35	0	407	0	442	49.11
MIL	085101104	Indust Window,Fixed Secur Sash Steel	AGLAB	25.00	30.00 SF	118	0	1,129	0	1,247	41.57
MIL	087401002	Plain Aluminum Threshold	ACARL	12.00	9.00 LF	146	2	23	0	171	19.00
MIL	087102034	4"x4"Brass/Bronze SD Butt Hinges Full Mortise, Ball Bearing	ACARL	6.00	4.50 PR	146	2	195	0	343	76.22
MIL	087102193	Entry Lockset F82 Series 4000, BHMA 626	ACARL	3.00	3.00 EA	195	3	416	0	614	204.67
MIL	087102236	Overhead Concealed Door Closer Exterior,Pivot Hung,Sgl Acting Single Acting	ACARL	2.00	3.00 EA	292	5	961	0	1,258	419.33
MIL	072121002	2"Mineral Fiberboard R5.26,Rigid - Walls	ACARL	180.00	9,900.00 SF	10,722	181	4,554	0	15,457	1.56
MIL	072121002	2"Mineral Fiberboard R5.26,Rigid - Roof	ACARL	180.00	6,750.00 SF	7,310	124	3,105	0	10,539	1.56

			CREWID	OUTPUT	Quantity	LABOR	EQUIPMNT	MATERIAL	UNITCOST	Total	UNITCOST
USR	Task00060	90' x 75' x 35' Pre-Engineered Metal Building, 25' Clear inside.		0.00	1.00 LS	0	0	0	250,000	250,000	250,000.00
		Budgetary estimate received from Dutton & Garfield dated June 6, 2002. Supply & erect the pre-engineered building - $250,000 Includes exterior pass doors and windows. Overhead door openings only (no doors).									
USR	Task00061	30' x 10' x 10' high Covered Walkway		0.00	1.00 LS	1,500	500	3,500	0	5,500	5,500.00
USR	Task00063	15' x 25' high Overhead Rolling Door		0.00	2.00 EA	4,000	1,500	10,000	0	15,500	7,750.00
	05 Interior Construction										
		The design and construction of the interior architectural aspects of the building, including interior masonry walls, doors, and windows for both the control room and the bathroom will be completed by the subcontractor. Interior work will also include constructing a mezzanine above the control room and bathroom. installing a set of stairs leading to the mezzanine and a handrail around the mezzanine.									
MIL	042203033	8"x16"x8"(21cm)Regular CMU Ptn (Sand Aggregate)	AMABF	41.25	405.00 SF	2,090	13	502	0	2,605	6.43
MIL	042208011	8"x16"x8"(21cm)Reg Lintel Block (Incl Bond Beams), Block Only	AMABF	45.00	26.00 EA	123	1	42	0	166	6.38
MIL	055103002	Mtl Stair,4'-0"W Cast Iron Tread (1.2M)w/Stl Stringer,Pipe Hdrl	SIWSC	5.38	10.00 EA	313	15	2,019	0	2,347	234.70
MIL	055211003	2"D(51mm)Welded Pipe Hdrl,2-Rail 3'H (.92M)w/Shop Paint,Stair Mtd	SIWSC	31.88	41.00 LF	216	10	688	0	914	22.29
MIL	081101004	3'x7'x6-3/4"DP Steel Door Frame 16 Ga Frame for 1-3/4"Door	ACARL	1.20	2.00 EA	325	5	157	0	487	243.50
MIL	081103204	3'x 7'x 1-3/4"x 18Ga Metal Door (Unrated)	ACARL	3.00	2.00 EA	130	2	428	0	560	280.00
MIL	085101104	Indust Window,Fixed Secur Sash Steel	AGLAB	25.00	15.00 SF	59	0	564	0	623	41.53
MIL	087401002	Plain Aluminum Threshold	ACARL	12.00	6.00 LF	97	2	15	0	114	19.00
MIL	087102034	4"x4"Brass/Bronze SD Butt Hinges Full Mortise, Ball Bearing	ACARL	6.00	3.00 PR	97	2	130	0	229	76.33
MIL	087102193	Entry Lockset F82 Series 4000, BHMA 626	ACARL	3.00	2.00 EA	130	2	278	0	410	205.00
MIL	087102236	Overhead Concealed Door Closer Exterior,Pivot Hung,Sgl Acting Single Acting	ACARL	2.00	2.00 EA	195	3	641	0	839	419.50
CIV	031102642	Elev Slab Edge Form,7-12"H,1 Use	ACARL	20.25	110.00 LF	1,059	18	109	0	1,186	10.78
CIV	031102651	Flat Pl Elev Forms,0-15'H,1 Use Elevated Slab Formwork	ACARI	16.25	450.00 SF	3,510	21	1,310	0	4,841	10.76
MIL	032101003	Gr 60 Resteel,Flgs & Slabs,#3-#6	SIWRC	0.31	0.23 TON	128	1	128	0	257	1,117.39
MIL	033051004	Conc Curing, Sprayed Membrane Curing Compound	ULABB	11.88	10.00 CSF	70	0	42	0	112	11.20
MIL	033111221	Pour Elev Slab,< 6", Crane & Bkt < (15 cm) Place 3000 PSI Conc	ALABG	11.88	4.60 CY	130	32	280	0	442	96.09
MIL	033114101	Concrete Floor Finishes, Screed	ACMAA	112.50	450.00 SF	255	1	0	0	256	0.57
MIL	033114103	Conc Floor Finishes, Final Float	ACMAC	90.63	450.00 SF	278	8	0	0	286	0.64

			CREWID	OUTPUT	Quantity	LABOR	EQUIPMNT	MATERIAL	UNITCOST	Total	UNITCOST
	Total for Interior Construction				1 LS	**9,205**	**136**	**7,333**	**0**	**16,674**	16,674.00
	06 Interior Finishes										

The subcontractor will install interior finishes, including gypsum wallboard, acoustical tile ceilings, and resilient flooring, in both the control room and the bathroom. Protective floor coatings will be installed in the process room. All interior painting will be completed by the subcontractor.

MIL	099201103	Paint Int Conc & CMU Surfaces One Coat Primer-Two Coats Paint	APTRA	45.00	810.00 SF	902	8	259	0	1,169	1.44
MIL	096601002	Solid Colors, Resil Tile Floor Solid Vinyl Tile 1/8"Thk 12"x12"	ATIFA	48.75	450.00 SF	317	2	1,427	0	1,746	3.88
MIL	096601212	1/8"Vinyl Plastic Base,Gp 1, 6"H Black, Russet and Umber	ATIFA	37.50	75.00 LF	69	1	60	0	130	1.73
	Total for Interior Finishes				1 LS	**1,288**	**11**	**1,746**	**0**	**3,045**	3,045.00
	Total for Superstructure				1 LS	**35,639**	**2,475**	**34,246**	**250,000**	**322,360**	322,360.00
	08 Plumbing										

1. *Sanitary system will be extended from the exterior main into the building through the floor slab. The system will serve all regular plumbing fixtures consisting of water closet, lavatory and floor drain in the bathroom.*
2. *Process drainage system will service the process area including the service sink, emergency shower and eyewash stations and will consist of a central floor drain which terminates in the sump pit. Liquid waste collected in the sump pit will be pumped out with sump pumps into the sludge holding tank through a 2-inch diameter pipe situated below the floor slab. Power to the sump pumps will be provided through a ½-inch conduit situated below the floor slab.*
3. *Potable cold water system will be extended from the exterior main into the building through the floor slab. The system will serve all regular plumbing fixtures including the emergency shower and eyewash station. The system will also provide water connections for all process and mechanical equipment, as required.*
4. *Potable hot water system will be provided with hot water produced by an electric heater. The heater and system will be of sufficient size to serve all regular hot water required plumbing fixtures*
5. *Natural gas service will be extended from the exterior main into the building through the floor slab. The service will extend to each gas-fired heating unit.*

MIL	B-EQOPRMED	Equip. Operators, Medium		0.00	16.00 HR	771	0	0	0	771	48.19
MIL	F10CA018	FORK LIFT,YRD 20,000#,18.13'L-HT		0.00	16.00 HR	0	380	0	0	380	23.75
	01 Backflow Preventer										
MIL	151123009	4" Flanged Backflow Preventer w/2Gate&2CK Vlv&Auto Dif Rlf Vlv	MPLUE	0.63	1.00 EA	143	2	2,362	0	2,507	2,507.00
	Total for Backflow Preventer				1 EA	**143**	**2**	**2,362**	**0**	**2,507**	2,507.00
	02 Sanitary and Vent										

			CREWID	OUTPUT	Quantity	LABOR	EQUIPMNT	MATERIAL	UNITCOST	Total	UNITCOST
MIL	154214003	Fl Drain w/Sed Bkt,4" Bot Outlet Round Satin Bronze Top, w/o Trap	MPLUE	0.94	1.00 EA	95	1	250	0	346	346.00
MIL	154301101	2" Hub-Type CI Vent Thru Roof	MPLUE	0.80	1.00 EA	112	1	11	0	124	124.00
MIL	150621902	Oakum(1/8 #/Dia ")Joint Material		1.00	5.00 LB	0	0	20	0	20	4.00
MIL	150621003	4"(10cm)Cast Iron Pipe & Fitting	MPLUE	13.75	30.00 LF	195	2	148	0	345	11.50
MIL	150621203	4"Sanitary Tee Cast Iron Fitting	MPLUE	1.94	1.00 EA	46	1	26	0	73	73.00
MIL	150621223	4" (1/4 Bend) Cast Iron Fitting	MPLUE	3.89	2.00 EA	46	1	43	0	90	45.00
MIL	150621233	4" (1/8 Bend) Cast Iron Fitting	MPLUE	3.48	4.00 EA	103	1	59	0	163	40.75
MIL	150621273	4" Vent Tee Cast Iron Fitting	MPLUE	1.81	1.00 EA	49	1	29	0	79	79.00
MIL	150621283	4" Wye Cast Iron Fitting	MPLUE	1.81	3.00 EA	148	2	56	0	206	68.67
MIL	150621333	4" P-Trap, Deep Seal, CI Fitting	MPLUE	3.48	1.00 EA	26	0	38	0	64	64.00
CIV	150621402	4" x 2" Wye Cast Iron Fitting	MPLUE	2.01	1.00 EA	44	1	24	0	69	69.00
MIL	150621901	Lead (1#/Dia ") Joint Material		1.00	25.00 LB	0	0	18	0	18	0.72
MIL	150621001	2"(50mm)Cast Iron Pipe & Fitting - Vent	MPLUE	26.25	30.00 LF	102	1	93	0	196	6.53
	Total for Sanitary and Vent				60 LF	**966**	**12**	**815**	**0**	**1,793**	29.88
	03 Potable Water										
MIL	150631003	3/4"(20mm) Cu Pipe/Tubing Type L	MPLUE	30.00	200.00 LF	595	7	176	0	778	3.89
MIL	150631023	3/4" Copper Tee - Straight Sweat	MPLUE	5.00	6.00 EA	107	1	5	0	113	18.83
MIL	150631033	3/4" Copper Tee-Reducing Sweat	MPLUE	5.00	1.00 EA	18	0	2	0	20	20.00
MIL	150631043	3/4" 90 Degree Elbow, Copper	MPLUE	10.00	20.00 EA	179	2	9	0	190	9.50
MIL	150631063	3/4" 45 Degree Elbow, Copper	MPLUE	10.00	5.00 EA	45	1	3	0	49	9.80
MIL	150631083	3/4" Straight Copper Coupling	MPLUE	10.00	25.00 EA	223	3	7	0	233	9.32
MIL	151151002	Faucet,3/4"Brz Garden Hose Valve w/Screwed Ends, 125#	MPLUE	4.00	3.00 EA	67	1	14	0	82	27.33
MIL	154241103	52Gal, 2500W Domest Auto H20 Htr Glass Lined,w/o Wiring & Hook-Up	MPLUE	0.38	1.00 EA	238	3	337	0	578	578.00
	Total for Potable Water				200 LF	**1,472**	**18**	**553**	**0**	**2,043**	10.22
	04 Rough-in										
MIL	154302001	Rough-In Water Closet, Floor Mtd Not Including Fixture	MPLUE	0.25	1.00 EA	357	4	186	0	547	547.00
MIL	154302005	Rough-In Lavatory, Wall Mtd Not Including Fixture	MPLUE	0.50	1.00 EA	179	2	103	0	284	284.00
MIL	154302007	Rough-In Service Sink, Wall Mtd Not Including Fixture	MPLUE	0.50	1.00 EA	179	2	262	0	443	443.00
MIL	154302008	Rough-In H20 Cooler (Free Stand) Not Including Fixture	MPLUE	0.50	1.00 EA	179	2	52	0	233	233.00
	Total for Rough-in				1 LS	**894**	**10**	**603**	**0**	**1,507**	1,507.00
	05 Plumbing Fixtures and Trim										
MIL	154501111	Flush Vlv H20 Closet, Floor Mtd Elongated,Vit China w/Siphon Jet	MPLUE	0.60	1.00 EA	149	2	395	0	546	546.00
MIL	154501511	Vit 20"x18" Wall Hung Lavatory	MPLUE	0.94	1.00 EA	95	1	165	0	261	261.00
MIL	154501621	Svce Sink,En CI,Trap Std 24"x20"	MPLUE	0.78	1.00 EA	115	1	463	0	579	579.00
MIL	154551001	Floor Stand'g Water Cooler,8 GPH	MPLUE	0.78	1.00 EA	115	1	626	0	742	742.00
HTW	019511102	Emergency Body Shower And Eye Wash Stations Assumes Std Hook-Up. No Additional Copper Piping Etc.	MPLUE	0.25	1.00 EA	357	4	607	0	968	968.00

			CREW	ID OUTPUT	Quantity	LABOR	EQUIPMNT	MATERIAL	UNITCOST	Total	UNITCOST
	Total for Plumbing Fixtures and Trim				1 LS	**831**	**9**	**2,256**	**0**	**3,096**	3,096.00
	06 Gas Service										
MIL	150611602	3/4"(20mm) A-53 Pipe, Sch 40 Not Incl Hangers or Fittings	MPLUE	38.75	150.00 LF	346	4	114	0	464	3.09
MIL	150611632	3/4" 90 Deg Ell, 150# MI Black	MPLUE	8.38	10.00 EA	107	1	12	0	120	12.00
MIL	150611652	3/4" 45 Deg Ell, 150# MI Black	MPLUE	8.38	4.00 EA	43	1	8	0	52	13.00
MIL	150611672	3/4" Tee, Straight 150# MI Black	MPLUE	6.50	2.00 EA	27	0	4	0	31	15.50
	Total for Gas Service				150 LF	**523**	**6**	**138**	**0**	**667**	4.45
	Total for Plumbing				1 LS	**5,600**	**437**	**6,727**	**0**	**12,764**	12,764.00
	09 HVAC										

The heating, ventilation, and air conditioning (HVAC) requirements will be determined by the subcontractor who will design and install the system. In general, ventilation will be provided by supply air handling units in combination with exhaust fans. Natural gas-fired heaters will supply heating for the process room. Electric baseboard heaters will supply heating for the control room and bathroom. Air conditioning in the control room will be provided with a self-contained, wall-mounted air conditioning unit. Heating in the control room and bathroom will be provided by electric baseboard heaters. The exact number of louvers, ventilators and unit heaters required, including size and location, will be known once the HVAC design is finalized. The subcontractor will be responsible for testing, adjusting, and balancing of the HVAC system upon installation.

MIL	057301203	Movable Ornamental Louver,4-10SF (> 3.0 M2) Incl Frame,Painted	MSHMD	4.75	26.00 SF	708	6	1,023	0	1,737	66.81
MIL	158213114	15"Dir Drive,1-Spd,Roof Exh Fan Temp to 200 F,2880CFM,3/4 HP	MSHMD	0.84	2.00 EA	309	3	1,490	0	1,802	901.00
AIR	157742002	Cooling Capacity 8.5 MBH, Sup. Heat 10.2 MBH Thru Wall Pkgd Walk-In	MSHMD	0.75	1.00 EA	172	1	888	0	1,061	1,061.00
AIR	157607001	300,000 BTU Input, 230,000 BTU Output, 2900 CFM, 1 HP, UH Gas Walk-In	MSPFF	0.40	2.00 EA	527	43	4,791	0	5,361	2,680.50
MIL	157601005	Unit Heaters, Electric, 15 KW w/Encl Coil,Bl Tstat,Wall Brkt	MSHMC	0.54	2.00 EA	457	4	1,894	0	2,355	1,177.50
MIL	158291101	Exhaust Fan,Wall Mtd,170 CFM Light Duty	MSHMD	1.25	1.00 EA	103	1	118	0	222	222.00
MIL	157531003	8'L Finned Tube Baseboard Unit Cmpl w/Encl & 3/4"IPS Heat Ele	MSPFC	1.00	2.00 EA	203	2	154	0	359	179.50
	Total for HVAC				1 LS	**2,479**	**60**	**10,358**	**0**	**12,897**	12,897.00
	11 Electric Power and Lighting										
USR	Task00187	Electrical Building Service		0.00	6,750.00 SF	0	0	0	27,000	27,000	4.00
	Total for Electric Power and Lighting				1 LS	**0**	**0**	**0**	**27,000**	**27,000**	27,000.00

			CREWID	OUTPUT	Quantity	LABOR	EQUIPMNT	MATERIAL	UNITCOST	Total	UNITCOST
12 Electrical Systems											
Electrical Process Equipment cost is based on Dick Holsberry's conceptual engineering estimate of 9/28/01 and is broken down as follows:											
Raceway, Fittings and Boxes		*$ 9,551.70*									
Wire and Cable		*12,875.97*									
Distribution		*124,595.72*									
Underground/Site		*24,301.40*									
Total		*$147,023.39*									
USR	Task00282	Electrical Process Equipment		0.00	1.00 LS	0	0	147,023	0	147,023	147,023.00
MIL	B-EQOPRMED	Equip. Operators, Medium		0.00	120.00 HR	5,780	0	0	0	5,780	48.17
MIL	F10CA018	FORK LIFT,YRD 20,000#,18.13'L-HT		0.00	120.00 HR	0	2,847	0	0	2,847	23.73
USR	Task00298	Conduit, Cable and Wire		0.00	1.00 LS	0	0	5,000	0	5,000	5,000.00
USR	Task00299	Panels, Breakers, Junction Boxes, Disconnect Switches, etc. Plug		0.00	1.00 LS	0	0	10,000	0	10,000	10,000.00
USR	Task00283	Programmable Logic Controls		0.00	1.00 LS	0	0	100,000	0	100,000	100,000.00
2 B-electrn + Small Tools											
NON	XMIXX020	SMALL TOOLS		0.00	110.40 HR	0	174	0	0	174	1.58
MIL	B-ELECTRN	Electricians, NBH WTP		0.00	240.00 HR	10,831	0	0	0	10,831	45.13
MIL	B-ELECTRN	Electricians, NBH WTP		0.00	960.00 HR	41,402	0	0	0	41,402	43.13
End of 2 B-electrn + Small Tools											
Total for Electrical Systems					1 LS	**58,013**	**3,021**	**262,023**	**0**	**323,057**	323,057.00

			CREWID OUTPUT	Quantity	LABOR	EQUIPMNT	MATERIAL	UNITCOST	Total	UNITCOST

13 Equipment

Process equipment for the anticipated initial flow rate of 700 gpm are outlined below. Only this process equipment will be installed as part of this workplan. Should a flow rate of 2,000 gpm be reached, additional equipment will be required. With the exception of the inclined plate clarifier, this activity includes the cost for submittals, fabrication, delivery and technical support during startup and testing only.

1. *Variable Speed Drive Pumps:*
   Clarifier feed pumps (P-101A & P-101B)
   Filtration feed pumps (P-301A & P-301B)

2. *Clarifier System:*
   Inclined plate clarifier (CL-101)
   Flash mix/Flocculation tank
   Static mixer (SM-101)
   Constant speed mixer (MX-101)
   Variable speed paddle mixer (MX-102)
   Slurry holding tank (TK-101)
   Diaphragm pumps (DP-101, DP-102, DP-103)

3. *Chemical Feed Systems:*
   Alum feed system tank (TK-201)
   Liquid polymer feed system (CF-201)
   Chemical addition feed pumps (MP-201, MP-202, MP-203)

4. *Sand Filtration System (SF-301)*

5. *Polishing Filtration System (PF-401)*

6. *Liquid Phase Granular Activated Carbon Adsorption System (LC-501)*

7. *System Support:*
   Air compressor (AC-701) - Quote received from Aberjona Pump and Compressor Service
   (2) Sump pumps (P-601 A/B)

USR	Task00086	Clarifier Feed Pumps (P-101A/B), 1,000 GPM @ 40' TDH, 60 HP, 2200 RPM, 3-Phase, 460 Volt, Variable Frequency Drive	0.00	2.00 EA	0	0	58,562	0	58,562	29,281.00
USR	Task00087	Sand Filter Feed Pumps (P-301A/B), 1,000 GPM @ 140 TDH, 125 HP, 2200 RPM, 3-Phase, 460 Volt, Variable Frequency Drive	0.00	2.00 EA	0	0	90,404	0	90,404	45,202.00
USR	Task00088	Air Driven Diaphragm Pumps; (DP-101) 2" in/out @ 100 GPM @ 50 psi; (DP-102) 2" in/out @ 20 GPM @ 50 psi, and (DP-103) 3" in/out @ 150 GPM @ 90 psi	0.00	3.00 EA	0	0	6,636	0	6,636	2,212.00
USR	Task00089	Inclined Plate Clarifier (CL-101), 1.0 GPM/SF @ 2,000 GPM, 2,640 SF Horizontal Projected Area	0.00	1.00 EA	0	0	224,535	0	224,535	224,535.00

			CREWID	OUTPUT	Quantity	LABOR	EQUIPMNT	MATERIAL	UNITCOST	Total	UNITCOST
USR	Task00090	Sand Filtration System (SF-301), 1,000 GPM		0.00	1.00 EA	0	0	110,400	0	110,400	110,400.00
USR	Task00091	Polishing Filtration System (PF-401A/B), 304 SS Housings		0.00	2.00 EA	0	0	47,556	0	47,556	23,778.00
USR	Task00092	Polishing Filter Cartridges		0.00	240.00 EA	0	0	3,758	0	3,758	15.66
USR	Task00094	Alum Metering Pumps (MP-201A/B), 2 GPH to 40 GPH, 3/4 HP, 1-Phase, 115 Volt		0.00	2.00 EA	0	0	5,795	0	5,795	2,897.50
USR	Task00095	Polymer Metering Pumps (MP-202A/B), 10 GPH to 50 GPH, 3/4 HP		0.00	2.00 EA	0	0	5,795	0	5,795	2,897.50
USR	Task00096	Algaecide Metering Pumps (MP-203), 0.5 GPH to 6 GPH, 1/3 HP, 1-Phase, 115 Volt		0.00	1.00 EA	0	0	924	0	924	924.00
USR	Task00097	Sump Pumps (P-601A/B), 100 GPM, 1-1/2 HP, 3-Phase, 460 Volt		0.00	2.00 EA	0	0	2,054	0	2,054	1,027.00
USR	Task00098	Air Compressor System (AC-701), includes Receiver, Particulate Filter, Air Dryer, and Coalescing Filter		0.00	1.00 EA	0	0	15,223	0	15,223	15,223.00
USR	Task00099	FRP Tank, 8' x 13.5' high (5,000 Gal), Alum Storage Tank (TK-201)		0.00	1.00 EA	0	0	14,000	0	14,000	14,000.00
USR	Task00100	FRP Tank, 10' x 15' high (9,000 Gal), Slurry Holding Tank (TK-101)		0.00	1.00 EA	0	0	22,400	0	22,400	22,400.00
USR	Task00103	Polymer Blending System (CF-201)		0.00	1.00 EA	0	0	7,175	0	7,175	7,175.00
USR	Task00328	Static Mixer, 12" (SM-101)		0.00	1.00 EA	0	0	500	0	500	500.00
USR	Task00462	Liquid Phase GAC 2 -Vessel System (LC-501A/B), 20,000 lbs. Carbon each, 10' Dia. x 22' high, 700 gpm		0.00	1.00 LS	0	0	0	127,810	127,810	127,810.00
		One 2-vessel system: $92,655 *40,000 lbs. of carbon @ $0.75/lb.: $30,000* *Shipping: $5155* *Total: $127,810.00*									
Total for Equipment					1 LS	**0**	**0**	**615,717**	**127,810**	**743,527**	743,527.00

	CREWID	OUTPUT	Quantity	LABOR	EQUIPMNT	MATERIAL	UNITCOST	Total	UNITCOST

90 Equipment Installation, Liquid Process Piping and Instrumentation

The subcontractor(s) will be responsible for the work associated with installing a complete treatment process system and related equipment within the new and existing treatment buildings. This work will include the supply of all supervision, labor, tools, and equipment necessary to receive, unload, store, set in place, anchor, grout, and touch-up paint all process equipment and related devices. This work will also include the supply of all supervision, labor, tools, and equipment necessary to receive, unload, store, fabricate, and install piping systems and associated supports and hangers, valves, flanges, and actuators. The following treatment system components will be installed by the subcontractor(s):

1. *All process equipment, including tanks and pumps*
2. *Process piping leading from CDF Cell #2 to the clarifier system*
3. *Process piping leading from the clarifier system to CDF Cell #3*
4. *All process piping, fittings, and supports within the treatment buildings*
5. *All manual and motor operated valves*
6. *All flow, pressure, and temperature indicators or elements*

The subcontractor(s) will be responsible for the cleaning and flushing, examination, and pre-operational testing of all piping systems and components that are a part of the installation. All instrument calibration will be done by the subcontractor(s) for all services installed.

			CREWID	OUTPUT	Quantity	LABOR	EQUIPMNT	MATERIAL	UNITCOST	Total	UNITCOST
01 Equipment Installation											

Installation of Process equipment will require time as follows

1.	*Variable Speed Drive Pumps:*		
	Clarifier feed pumps (P-101A & P-101B)	*4 hours each*	*8 hours*
	Filtration feed pumps (P-301A & P-301B)	*4 hours each*	*8 hours*
2.	*Clarifier System:*		
	Inclined plate clarifier (CL-101)	*40 hours*	*40 hours*
	Static mixer (SM-101)	*2 hours*	*2 hours*
	Slurry holding tank (TK-101)	*10 hours*	*10 hours*
	Diaphragm pumps (DP-101, DP-102, DP-103)	*4 hours*	*12 hours*
3.	*Chemical Feed Systems:*		
	Alum feed system tank (TK-201)	*10 hours*	*10 hours*
	Liquid polymer feed system (CF-201)	*8 hours*	*8 hours*
	Chemical addition feed pumps (MP-201, MP-202, MP-203)	*4 hours*	*4 hours*
4.	*Sand Filtration System (SF-301)*	*20 hours*	*20 hours*
5.	*Polishing Filtration System (PF-401)*	*20 hours*	*20 hours*
6.	*Liquid Phase Granular Activated Carbon Adsorption System (LC-501)*	*40 hours*	*40 hours*
7.	*System Support:*		
	Air compressor (AC-701)	*8 hours*	*8 hours*
	(2) Sump pumps (P-601 A/B)	*4 hours*	*4 hours*
	TOTAL	*190 hours*	

Use an Operator with a Forklift and 2 Millwrights for 4 weeks to offload and set the Equipment. A second crew will complete equipment installation.

MIL	B-EQOPRMED	Equip. Operators, Medium	0.00	160.00 HR	7,706	0	0	0	7,706	48.16
MIL	F10CA018	FORK LIFT,YRD 20,000#,18.13'L-HT	0.00	160.00 HR	0	3,796	0	0	3,796	23.73
USR	Task00364	Expansion Anchors	0.00	100.00 EA	0	0	500	0	500	5.00
2 B-millwrt + Misc Power Tools										
NON	XMIXX010	MISC. POWER TOOLS	0.00	380.00 HR	0	2,432	0	0	2,432	6.40
MIL	B-MILLWRT	Millwrights, NBH WTP	0.00	380.00 HR	16,388	0	0	0	16,388	43.13
End of 2 B-millwrt + Misc Power Tools										
Total for Equipment Installation				1 LS	**24,094**	**6,228**	**500**	**0**	**30,822**	30,822.00

02 Liquid Process Piping

			CREW	ID	OUTPUT	Quantity	LABOR	EQUIPMNT	MATERIAL	UNITCOST	Total	UNITCOST
	01 From Cell to WTP											
AIR	150645184	12" Tee, PVC Sch 40, Socket	MPLUE		0.70	12.00 EA	1,530	18	1,554	0	3,102	258.50
AIR	150645124	12" Sch 40 PVC Press Pipe Socket Weld	MPLUE		6.00	440.00 LF	6,547	78	3,824	0	10,449	23.75
MIL	150645382	8"Flange,150#Socket Weld,PVC S40	MPLUE		0.94	12.00 EA	1,143	14	674	0	1,831	152.58
MIL	150645182	8" Tee, PVC Sch 40, Socket Weld	MPLUE		0.94	8.00 EA	762	9	498	0	1,269	158.63
MIL	150645142	8" 90 Degree Elbow, PVC Sch 40 Socket Weld	MPLUE		1.50	4.00 EA	238	3	264	0	505	126.25
MIL	150645221	8" PVC Sch 40 Reducing Insert Socket Weld	MPLUE		1.50	4.00 EA	238	3	216	0	457	114.25
MIL	151101106	8" Sgl Disc Type Check Valve IB Wafer Type- 125#	MSPFF		0.48	6.00 EA	1,333	110	4,546	0	5,989	998.17
MIL	150645122	8" Sch 40 PVC Press Pipe Socket Weld	MPLUE		9.75	360.00 LF	3,296	39	1,739	0	5,074	14.09
USR	Task00116	12" 90 Degree Elbow, PVC Socket Weld			0.00	14.00 EA	0	0	1,848	0	1,848	132.00
USR	Task00117	12' Flange, 150# Socket Weld, PVC Sch 40			0.00	14.00 EA	0	0	1,666	0	1,666	119.00
USR	Task00118	12" Single Disc Type Check Valve, B Wafer Type, 125#			0.00	3.00 EA	0	0	5,772	0	5,772	1,924.00
AIR	150411001	2" Diameter Identification Tag	MPLUE		16.00	9.00 EA	50	1	12	0	63	7.00
1 B-plumber/laborer + Small Tools - for 12" Pipe												
NON	XMIXX020	SMALL TOOLS			0.00	80.40 HR	0	127	0	0	127	1.58
MIL	B-LABORER	Laborers, (Semi-Skilled), NBH WTP			0.00	120.00 HR	3,952	0	0	0	3,952	32.93
MIL	B-PLUMBER	Plumbers, NBH WTP			0.00	120.00 HR	4,427	0	0	0	4,427	36.89
MIL	B-PLUMBER	Plumbers, NBH WTP			0.00	60.00 HR	2,334	0	0	0	2,334	38.90
End of 1 B-plumber/laborer + Small Tools - for 12" Pipe												
2 B-stm/pipe + 1 20 Ton Crane, Hydraulic R/T - for												
MIL	B-EQOPRMED	Equip. Operators, Medium, NBH WTP			0.00	3.00 HR	144	0	0	0	144	48.00
MIL	B-STM/PIPE	Steam / Pipefitters, NBH WTP			0.00	15.00 HR	604	0	0	0	604	40.27
MIL	B-STM/PIPE	Steam / Pipefitters, NBH WTP			0.00	7.50 HR	317	0	0	0	317	42.27
MIL	B-STM/PIPE	Steam / Pipefitters, NBH WTP			0.00	15.00 HR	517	0	0	0	517	34.47
MAP	C75GV002	CRANE,HYD,S/P,RT,4WD,20T/70'BOOM			0.00	3.00 HR	0	124	0	0	124	41.33
NON	XMIXX020	SMALL TOOLS			0.00	4.05 HR	0	6	0	0	6	1.48
End of 2 B-stm/pipe + 1 20 Ton Crane, Hydraulic R/T - for												
	Total for From Cell to WTP					800 LF	**27,432**	**532**	**22,613**	**0**	**50,577**	63.22
	02 Inside WTP											
AIR	150645184	12" Tee, PVC Sch 40, Socket	MPLUE		0.70	6.00 EA	765	9	777	0	1,551	258.50
AIR	150645124	12" Sch 40 PVC Press Pipe Socket Weld	MPLUE		6.00	180.00 LF	2,678	32	1,564	0	4,274	23.74
MIL	150645382	8"Flange,150#Socket Weld,PVC S40	MPLUE		0.94	12.00 EA	1,143	14	674	0	1,831	152.58
MIL	150645182	8" Tee, PVC Sch 40, Socket Weld	MPLUE		0.94	6.00 EA	571	7	373	0	951	158.50
MIL	150645142	8" 90 Degree Elbow, PVC Sch 40 Socket Weld	MPLUE		1.50	4.00 EA	238	3	264	0	505	126.25
MIL	150645221	8" PVC Sch 40 Reducing Insert Socket Weld	MPLUE		1.50	6.00 EA	357	4	324	0	685	114.17
MIL	151101106	8" Sgl Disc Type Check Valve IB Wafer Type- 125#	MSPFF		0.48	6.00 EA	1,333	110	4,546	0	5,989	998.17
MIL	150645122	8" Sch 40 PVC Press Pipe Socket Weld	MPLUE		9.75	140.00 LF	1,282	15	676	0	1,973	14.09
USR	Task00116	12" 90 Degree Elbow, PVC Socket Weld			0.00	11.00 EA	0	0	1,452	0	1,452	132.00
USR	Task00117	12' Flange, 150# Socket Weld, PVC Sch 40			0.00	4.00 EA	0	0	476	0	476	119.00
USR	Task00118	12" Single Disc Type Check Valve, B Wafer Type, 125#			0.00	4.00 EA	0	0	7,696	0	7,696	1,924.00
AIR	150411001	2" Diameter Identification Tag	MPLUE		16.00	10.00 EA	56	1	14	0	71	7.10

			CREWID	OUTPUT	Quantity	LABOR	EQUIPMNT	MATERIAL	UNITCOST	Total	UNITCOST
MIL	150421016	8" OD Snap-On Plastic Valve Tag Includes Insulation	MPLUE	4.00	3.00 EA	67	1	31	0	99	33.00
MIL	150421017	10" OD Snap-On Plastic Valve Tag Includes Insulation	MPLUE	3.00	5.00 EA	149	2	59	0	210	42.00
1 B-plumber/laborer + Small Tools - for 12" Pipe											
NON	XMIXX020	SMALL TOOLS		0.00	40.20 HR	0	64	0	0	64	1.59
MIL	B-LABORER	Laborers, (Semi-Skilled), NBH WTP		0.00	60.00 HR	1,976	0	0	0	1,976	32.93
MIL	B-PLUMBER	Plumbers, NBH WTP		0.00	60.00 HR	2,214	0	0	0	2,214	36.90
MIL	B-PLUMBER	Plumbers, NBH WTP		0.00	30.00 HR	1,167	0	0	0	1,167	38.90
End of 1 B-plumber/laborer + Small Tools - for 12" Pipe											
2 B-stm/pipe + 1 20 Ton Crane, Hydraulic R/T - for											
MIL	B-EQOPRMED	Equip. Operators, Medium, NBH WTP		0.00	4.00 HR	193	0	0	0	193	48.25
MIL	B-STM/PIPE	Steam / Pipefitters, NBH WTP		0.00	20.00 HR	806	0	0	0	806	40.30
MIL	B-STM/PIPE	Steam / Pipefitters, NBH WTP		0.00	10.00 HR	423	0	0	0	423	42.30
MIL	B-STM/PIPE	Steam / Pipefitters, NBH WTP		0.00	20.00 HR	689	0	0	0	689	34.45
MAP	C75GV002	CRANE,HYD,S/P,RT,4WD,20T/70'BOOM		0.00	4.00 HR	0	165	0	0	165	41.25
NON	XMIXX020	SMALL TOOLS		0.00	5.40 HR	0	9	0	0	9	1.67
End of 2 B-stm/pipe + 1 20 Ton Crane, Hydraulic R/T - for											
	Total for Inside WTP				320 LF	**16,107**	**436**	**18,926**	**0**	**35,469**	110.84
	03 From WTP to Cell										
USR	Task00169	14" Sch 40 PVC Pressure Pipe, Socket Weld		0.00	180.00 LF	0	0	18,540	0	18,540	103.00
USR	Task00170	14" 90 Degree Elbow, PVC, Sch 40, Socket Weld		0.00	6.00 EA	0	0	1,050	0	1,050	175.00
USR	Task00171	14" Flange, 150# Scoket Weld, PVC Sch 40		0.00	2.00 EA	0	0	353	0	353	176.50
USR	Task00172	14' Single Disc Type Check Valve, B Wafer Type-125#		0.00	1.00 EA	0	0	2,982	0	2,982	2,982.00
AIR	150411001	2" Diameter Identification Tag	MPLUE	16.00	1.00 EA	6	0	1	0	7	7.00
1 B-plumber/laborer + Small Tools - for 12" Pipe											
NON	XMIXX020	SMALL TOOLS		0.00	30.82 HR	0	49	0	0	49	1.59
MIL	B-LABORER	Laborers, (Semi-Skilled), NBH WTP		0.00	46.00 HR	1,515	0	0	0	1,515	32.93
MIL	B-PLUMBER	Plumbers, NBH WTP		0.00	46.00 HR	1,697	0	0	0	1,697	36.89
MIL	B-PLUMBER	Plumbers, NBH WTP		0.00	23.00 HR	895	0	0	0	895	38.91
End of 1 B-plumber/laborer + Small Tools - for 12" Pipe											
2 B-stm/pipe + 1 20 Ton Crane, Hydraulic R/T - for											
MIL	B-EQOPRMED	Equip. Operators, Medium, NBH WTP		0.00	1.60 HR	77	0	0	0	77	48.13
MIL	B-STM/PIPE	Steam / Pipefitters, NBH WTP		0.00	8.00 HR	322	0	0	0	322	40.25
MIL	B-STM/PIPE	Steam / Pipefitters, NBH WTP		0.00	4.00 HR	169	0	0	0	169	42.25
MIL	B-STM/PIPE	Steam / Pipefitters, NBH WTP		0.00	8.00 HR	276	0	0	0	276	34.50
MAP	C75GV002	CRANE,HYD,S/P,RT,4WD,20T/70'BOOM		0.00	1.60 HR	0	66	0	0	66	41.25
NON	XMIXX020	SMALL TOOLS		0.00	2.16 HR	0	3	0	0	3	1.39
End of 2 B-stm/pipe + 1 20 Ton Crane, Hydraulic R/T - for											
	Total for From WTP to Cell				180 LF	**4,957**	**118**	**22,926**	**0**	**28,001**	155.56
	Total for Liquid Process Piping				1,300 LF	**48,496**	**1,086**	**64,465**	**0**	**114,047**	87.73

			CREWID	OUTPUT	Quantity	LABOR	EQUIPMNT	MATERIAL	UNITCOST	Total	UNITCOST
	03 Instrumentation										
USR	Task00308	Instrument Air Lines		0.00	1.00 LOT	0	0	2,500	0	2,500	2,500.00
MIL	B-EQOPRMED	Equip. Operators, Medium		0.00	40.00 HR	1,927	0	0	0	1,927	48.18
MIL	F10CA018	FORK LIFT,YRD 20,000#,18.13'L-HT		0.00	40.00 HR	0	949	0	0	949	23.73
USR	Task00456	Instrumentation - Transmitters and Recorders/Totalizer (PIT, FIT and LIT) and Switches (LSHH PSHH, etc.)		0.00	1.00 LS	0	0	50,000	0	50,000	50,000.00
1 B-plumber/laborer + Small Tools											
NON	XMIXX020	SMALL TOOLS		0.00	53.60 HR	0	85	0	0	85	1.59
MIL	B-LABORER	Laborers, (Semi-Skilled), NBH WTP		0.00	80.00 HR	2,635	0	0	0	2,635	32.94
MIL	B-PLUMBER	Plumbers, NBH WTP		0.00	80.00 HR	2,951	0	0	0	2,951	36.89
MIL	B-PLUMBER	Plumbers, NBH WTP		0.00	40.00 HR	1,556	0	0	0	1,556	38.90
End of 1 B-plumber/laborer + Small Tools											
Total for Instrumentation					1 LS	**9,069**	**1,034**	**52,500**	**0**	**62,603**	62,603.00
Total for Equipment Installation, Liquid Process Piping and I					1 LS	**81,659**	**8,348**	**117,465**	**0**	**207,472**	207,472.00
Total for Construction of Permanent Plant Facility					1 LS	**257,513**	**19,152**	**1,083,568**	**404,810**	**1,765,043**	1,765,043.00

	CREWID	OUTPUT	Quantity	LABOR	EQUIPMNT	MATERIAL	UNITCOST	Total	UNITCOST

90 Start-up and Testing

Manufacturer's Rep services included in price for equipment and not in this WBS element.

Cold Start-up Period *2 weeks (24 hours/day for 14 days).*

Hot Start-up Period *2 weeks (24 hours/day for 14 days).*

Shutdown/mothballing *1 week (40 hours).*

Plant Operators required for duration of the above activities (24 hours/day for 28 days plus 40 hours for Shutdown).

Engineering Oversight/Supervision also required for duration of the above activities (24 hours/day for 28 days plus 40 hours for Shutdown). Allow 5% of the following Direct Cost for this Oversight/Supervision:

13.50.13	*Equipment*	*$743,527*	
13.50.90	*Installation, Piping & Instrumentation*		*207,472*
	Subtotal	*$950,999*	
Cost @ 10% =		*$ 95,100*	

A Millwright Foreman and an Electrician Foreman will be required 40 hours/week for 5 weeks.

Plant will be in full operation for start-up. It will operate 24 hours/day, 7 days/ week. Chemicals will be required only for the Hot Start-up. No filters or other maintenance parts will required changing.

Polymer - anionic.
Dosage rate = 2 ppm. 50 gallons/month @ 700 gpm. Cost = $3.75/gallon.
48.5% Alum solution.
Dosage rate = 150 ppm. 5,288 gallons/month @ 700 gpm. Cost = $0.57/gallon.
Algacide - Tolcide PS 2000.
Dosage rate = 25 ppm. 13 drums/month @ 700 gpm. Cost = $1,500/drum.

Total Consumption for One Month:

Polymer	*50 gallons/month*	*Cost = $3.75/gallon x 50*	*= $ 188/mo.*
Alum	*5,288 gallons/month*	*Cost = $0.57/gallon x 5,288*	*= $ 3,015/mo.*
Algacide	*13 drums/month*	*Cost = $1,500/drum x 13 drums*	*= $19,500/mo.*

Based on a 30 day month, Total Chemical Consumption = $22,702/mo.

Based on a 28 day month, Total Chemical Consumption = $21,188.

Electrical Consumption based on 210 total operating HP.

210 HP x 0.7457 kw/HP = 157 kw.

			CREWID	OUTPUT	Quantity	LABOR	EQUIPMNT	MATERIAL	UNITCOST	Total	UNITCOST
		157 kw x 1.3 (lighting and MCC Consumption) = 204 kw.									
		204 kw x 24 hours x 30 days = 146,880 kw-hr.									
		204 kw x 8 hours x 5 days = 8,160 kw-hr.									
USR	Item000082	Treatment Plant Operator		0.00	760.00 HR	22,721	0	0	0	22,721	29.90
MIL	B-MILLWRT	Millwrights		0.00	200.00 HR	9,025	0	0	0	9,025	45.13
MIL	B-ELECTRN	Electricians		0.00	200.00 HR	9,026	0	0	0	9,026	45.13
USR	Task00439	Electric Power Consumption		0.00	155,040.00 KW-H	0	0	0	12,915	12,915	0.08
USR	Task00463	Phone		0.00	1.00 MO	0	0	0	150	150	150.00
USR	Task00464	Gas		0.00	1.00 MO	0	0	0	229	229	229.00
USR	Task00465	Water		0.00	1.00 MO	0	0	0	150	150	150.00
USR	Task00523	Chemical Consumption		0.00	1.00 LS	0	0	21,188	0	21,188	21,188.00
USR	Task00869	Per Diem - Meals & Lodging		0.00	28.00 DAY	0	0	0	1,680	1,680	60.00
USR	Task00568	Engineering Oversight and Supervision during Start-up and Testing		0.00	1.00 LS	95,100	0	0	0	95,100	95,100.00
	Total for Start-up and Testing				1 LS	**135,872**	**0**	**21,188**	**15,124**	**172,184**	172,184.00
	Total for Physical Treatment				1 LS	**393,385**	**19,152**	**1,104,756**	**419,934**	**1,937,227**	1,937,227.00
	19 Disposal (Commercial)										
	21 Transportation to Storage/Disposal Facility										
	01 Loading/Hauling/Unloading of Solids										
	Asphalt generated during site work to recycling facility: 2 Loads										
	Demolished process piping, power and control wiring and concrete to a non-hazardous waste landfill: 4 Loads										
USR	Task00281	20 CY Roll-off of Site Prep Waste/Demolition Debris		0.00	12.00 HR	0	0	0	900	900	75.00
USR	Task00466	(2) Loads of Asphalt to be Removed Off-Site		0.00	6.00 HR	0	0	0	450	450	75.00
	Total for Loading/Hauling/Unloading of Solids				1 LS	**0**	**0**	**0**	**1,350**	**1,350**	1,350.00
	Total for Transportation to Storage/Disposal Facility				1 LS	**0**	**0**	**0**	**1,350**	**1,350**	1,350.00
	22 Disposal Fees and Taxes										
	01 General Construction Debris										
	Demolished process piping, power and control wiring and concrete will be disposed of at an appropriately permitted landfill in accordance with the TTSP. All demolished waste is assumed to be non-hazardous.										
USR	Task00467	Tipping Fees		0.00	4.00 EA	0	0	0	3,000	3,000	750.00
	Total for General Construction Debris				4 EA	**0**	**0**	**0**	**3,000**	**3,000**	750.00

			CREWID	OUTPUT	Quantity	LABOR	EQUIPMNT	MATERIAL	UNITCOST	Total	UNITCOST
90 Asphalt Recycling											
Recycling of asphalt at an appropriately permitted facility will be in accordance with the TTSP. Assume 40 CY of asphalt to be recycled.											
USR	Task00467	Tipping Fees, Recycling Asphalt Pavement		0.00	2.00 LOAD	0	0	0	500	500	250.00
Total for Asphalt Recycling					2 EA	**0**	**0**	**0**	**500**	**500**	250.00
Total for Disposal Fees and Taxes					1 LS	**0**	**0**	**0**	**3,500**	**3,500**	3,500.00
Total for Disposal (Commercial)					1 LS	**0**	**0**	**0**	**4,850**	**4,850**	4,850.00
22 General Requirements											
03 Procurement											

Solicitation and selection activities for the water treatment facility have been included under Task Order No. 17. This subtask, therefore, includes the efforts of the procurement department to award and manage subcontracts, purchase materials and equipment, and provide ongoing support during construction activities. Under this Work Plan, the procurement activities for the water treatment facility are complete upon closeout of all subcontracts. The procurement effort for the water treatment facility is as follows:

1. *Pre-Engineered Building and Foundation System.*
2. *Mechanical Subcontractor.*
3. *Electrical Subcontractor.*
4. *Pumps and Variable Speed Motors.*
5. *Chemical Feed Systems.*
6. *Clarifier System.*
7. *Sand Filtration System.*
8. *Polishing Filtration System.*
9. *Liquid Phase Granular Activated Carbon Adsorption System.*
10. *Programmable Logic Controller.*
11. *Laboratory Analysis for Effluent Monitoring.*

Allow 1% of the following Direct Cost for the above:

02.	*Sample & analysis*	*$ 226,626*
03.	*Site Work*	*81,463*
13.	*Physical Treatment*	*1,937,227*
19.	*Disposal (Commercial)*	*4,850*
	Subtotal	*$2,250,166*

Cost @ 1% = $22,502

USR	Task00570	Solicitation and Selection Activities		0.00	1.00 LS	22,502	0	0	0	22,502	22,502.00
Total for Procurement					1 LS	**22,502**	**0**	**0**	**0**	**22,502**	22,502.00

			CREWID	OUTPUT	Quantity	LABOR	EQUIPMNT	MATERIAL	UNITCOST	Total	UNITCOST
04 Engineering											

This activity includes:

1. *The cost for home office chemist to assist in procuring an analytical laboratory and review, validate, and report analytical data for this project.*
2. *The cost for home office engineers to review and approve submittals for installation of the water treatment system and provide technical support during construction activities. There are 11 Procurement Packages requiring engineering support.*
3. *The time for a cost estimator to prepare the Estimate. This activity also includes costs for internal peer review of the Estimate.*
4. *The cost for a site quality control engineer who will be responsible to monitor each subcontractor to ensure the work is being performed in accordance with the project specifications, the Contractor Quality Control Plan, and the Construction Quality Control Plan. The site quality control engineer will also be responsible to monitor subcontractor field tests, inspections, and other quality control activities, and to ensure that the subcontractor is submitting the required field reports. Required full time for constrution duration. Also required for pre-construction activities and for start-up, training and shutdown.*

Allow 10% of the following Direct Cost for the above:

03.	*Site Work*	*$ 81,463*
13.	*Physical Treatment*	*1,937,227*
19.	*Disposal (Commercial)*	*4,850*
	Subtotal	*$2,023,540*

Cost @ 10% = $202,354

USR	Task00571	Engineering Activities	0.00	1.00 LS	202,354	0	0	0	202,354	202,354.00
Total for Engineering				1 LS	**202,354**	**0**	**0**	**0**	**202,354**	202,354.00

			CREWID	OUTPUT	Quantity	LABOR	EQUIPMNT	MATERIAL	UNITCOST	Total	UNITCOST
07 Health and Safety											

This subtask includes the efforts of the health and safety department to prepare a Task-specific SSHP Addendum. In addition, health and safety personnel will work with the subcontractors to develop AHAs for the work to be performed. Oversight of subcontractor activities will be performed by the subcontractor Health and Safety Supervisor (HSS) and the NBH Site Safety and Health Office (SSHO) covered under Task Order No. 24, GM funding. Costs for the Environmental Health and Safety Awareness, Recognition and Participation Programs described are also included under this subtask.

Carry PPE for the deconning of existing Process Equipment and Piping plus a minimual allowance for other work during this task.

Awareness, Recognition and Participation Programs. To apply to all craft personnel performing work at the site.

Allow 1% of the following Direct Cost for the above:

03.	*Site Work*	*$ 81,463*
13.	*Physical Treatment*	*1,937,227*
19.	*Disposal (Commercial)*	*4,850*
	Subtotal	*$2,023,540*

Cost @ 1% = $20,235

USR	Task00572	Health and Safety Activities	0.00	1.00 LS	20,235	0	0	0	20,235	20,235.00
Total for Health and Safety				1 LS	**20,235**	**0**	**0**	**0**	**20,235**	20,235.00
Total for General Requirements				1 LS	**245,091**	**0**	**0**	**0**	**245,091**	245,091.00
29 Fee										

A fixed fee of 5% was applied to total Project Cost from previous WBS elements.

5% Fee Calculation:

Total Project Cost $2,599,932

5% Fee = 5% x $2,599,932 = $129,997

USR	Task00322	Fee	0.00	1.00 LS	0	0	0	129,997	129,997	129,997.00
Total for Fee				1 LS	**0**	**0**	**0**	**129,997**	**129,997**	129,997.00
Total for HTRW REMEDIAL ACTION (CONSTRUCTION)				1 EA	**792,411**	**30,423**	**1,118,063**	**789,032**	**2,729,929**	2,729,929.00
Total New Bedford Harbor - Water Treatment Plant, 100% Design					**792,411**	**30,423**	**1,118,063**	**789,032**	**2,729,929**	

	CREWID	OUTPUT	Quantity	LABOR	EQUIPMNT	MATERIAL	UNITCOST	Total	UNITCOST

Appendix H

Project Schedule

Activity ID	O D	R D	Early Start	Early Finish	Late Start	Late Finish	T F
TO#17 - NBH DESIGN (UPPER & LOWER)							
WTP AREA C DESIGN							
0330236	1	0	05JUN01A	05JUN01A	05JUN01A	05JUN01A	
B720330505	15	0	15JUN01A	06JUL01A	15JUN01A	06JUL01A	
B720330510	5	0	09JUL01A	17JUL01A	09JUL01A	17JUL01A	
B720330511	86*	0*	17JUL01A	14NOV01A	17JUL01A	14NOV01A	
B720330515	60	0	18JUL01A	02NOV01A	18JUL01A	02NOV01A	
B720330516	5	0	17JUL01A	23JUL01A	17JUL01A	23JUL01A	
B720330524	5	0	15AUG01A	21AUG01A	15AUG01A	21AUG01A	
B720330525	0	0		26SEP01A		26SEP01A	
B720330529	5	0	05NOV01A	14NOV01A	05NOV01A	14NOV01A	
B720330530	0	0		14NOV01A		14NOV01A	
B720330535	10	0	15NOV01A	09JAN02A	15NOV01A	09JAN02A	
B720330540	5	0	10JAN02A	17JAN02A	10JAN02A	17JAN02A	
B720330542	0	0		21FEB02A		21FEB02A	
B720330544	85*	16*	25FEB02A	24JUN02	25FEB02A	25NOV02	108
B720330545	15	6	25FEB02A	10JUN02	25FEB02A	11NOV02	106
B720330547	5	5	11JUN02	17JUN02	12NOV02	18NOV02	108
B720330548	5	5	18JUN02	24JUN02	19NOV02	25NOV02	108
B720330550	0	0		24JUN02		25NOV02	108
WTP WORK PACKAGES							
B720330504	0	0		05JUN01A		05JUN01A	
B720330901	1	0	26JUN01A	26JUN01A	26JUN01A	26JUN01A	
B720330902	20	0	22JUN01A	15AUG01A	22JUN01A	15AUG01A	
B720330905	5	0	16AUG01A	11SEP01A	16AUG01A	11SEP01A	
0331100	286*	50*	26JUN01A	12AUG02	26JUN01A	28OCT02	54
B720331105	4	0	26JUN01A	29JUN01A	26JUN01A	29JUN01A	
B720331110	14	0	02JUL01A	16JUL01A	02JUL01A	16JUL01A	
B720331115	5	0	13AUG01A	12OCT01A	13AUG01A	12OCT01A	
B720331119	0	0		12OCT01A		12OCT01A	
B720331125	8	0	08OCT01A	15MAR02A	08OCT01A	15MAR02A	
B720331126	5	0	18MAR02A	13MAY02A	18MAR02A	13MAY02A	
B720331127	5	2	14MAY02A	04JUN02	14MAY02A	28AUG02	60
B720331140	5	8	17MAY02A	12JUN02	17MAY02A	28AUG02	54
B720331145	20	20	13JUN02	11JUL02	29AUG02	26SEP02	54
B720331150	4	4	12JUL02	17JUL02	27SEP02	02OCT02	54
B720331154	10	10	18JUL02	31JUL02	03OCT02	16OCT02	54
B720331155	1	1	01AUG02	01AUG02	17OCT02	17OCT02	54
B720331160	5	5	02AUG02	08AUG02	18OCT02	24OCT02	54
B720331165	5	5	02AUG02	08AUG02	18OCT02	24OCT02	54
B720331170	2	2	09AUG02	12AUG02	25OCT02	28OCT02	54
B720331200	198*	53*	02NOV01A	15AUG02	02NOV01A	31JAN03	116
B720331205	0	0	02NOV01A	08NOV01A	02NOV01A	08NOV01A	
B720331210	15	0	09NOV01A	15FEB02A	09NOV01A	15FEB02A	
B720331215	10	0	31JAN02A	29MAR02A	31JAN02A	29MAR02A	
B720331219	0	0		29MAR02A		29MAR02A	
B720331225	20	11	20MAY02A	17JUN02	20MAY02A	02DEC02	116
B720331226	5	5	18JUN02	24JUN02	03DEC02	09DEC02	116

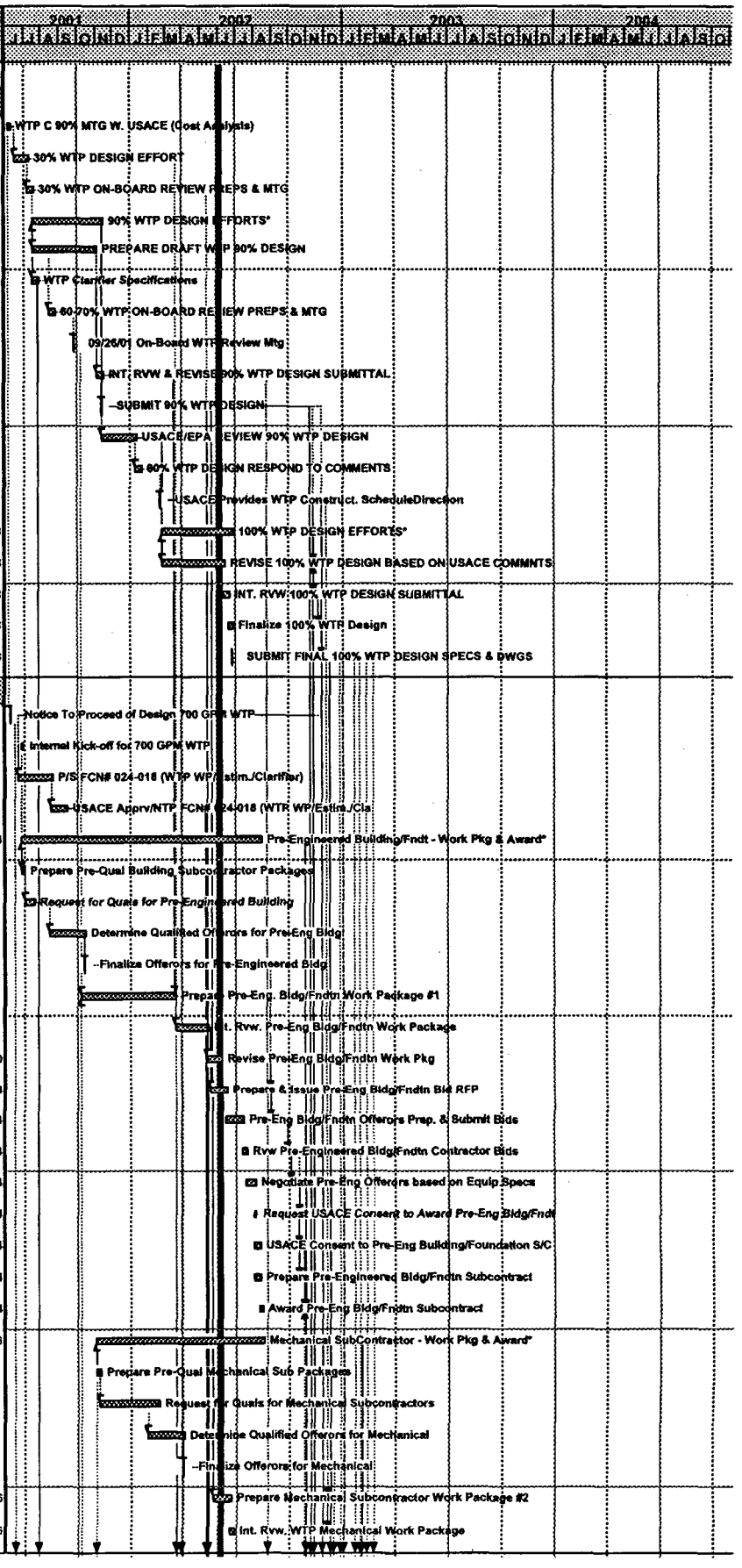

Start Date	01MAR94
Finish Date	10JAN11
Data Date	03JUN02
Run Date	06JUN02 11:17

© Primavera Systems, Inc.

TR2F

WTP CONSTRUCTION: EARLY & LATE DATES

Date	Revision	Checked	Approved

Activity ID	O D	R D	Early Start	Early Finish	Late Start	Late Finish	T F	Activity
B720331227	5	5	25JUN02	01JUL02	10DEC02	16DEC02	116	Revise WTP Mechanical Work Package
B720331240	5	5	25JUN02	01JUL02	10DEC02	16DEC02	116	Prepare & Issue Mechanical S/C Bid RFP
B720331245	20	20	02JUL02	30JUL02	17DEC02	15JAN03	116	Mechanical Offerors Prep. & Submit Bids
B720331250	4	4	31JUL02	05AUG02	16JAN03	21JAN03	116	Rvw Mechanical Contractor Bids
B720331255	1	1	06AUG02	06AUG02	22JAN03	22JAN03	116	Request USACE Consent for Award of Mechanical
B720331260	5	5	07AUG02	13AUG02	23JAN03	29JAN03	116	USACE Consent to Mechanical Sub
B720331265	5	5	07AUG02	13AUG02	23JAN03	29JAN03	116	Prepare Mechanical Subcontract
B720331270	2	2	14AUG02	15AUG02	30JAN03	31JAN03	116	Award Mechanical Subcontract
B720331300	202*	57*	02NOV01A	21AUG02	02NOV01A	24FEB03	127	Electrical SubContractor - Work Pkg & Award*
B720331305	5	0	02NOV01A	08NOV01A	02NOV01A	08NOV01A		Prepare Pre-Qual Electrical Sub Packages
B720331310	15	0	09NOV01A	12FEB02A	09NOV01A	12FEB02A		Request for Quals for Electrical Subcontractors
B720331315	10	0	31JAN02A	29MAR02A	31JAN02A	29MAR02A		Determine Qualified Offerors for Electrical
B720331319	0	0		29MAR02A		29MAR02A		Finalize Offerors for Electrical
B720331325	15	15	03JUN02*	21JUN02	05NOV02	25NOV02	109	Prepare Electrical Subcontractor Work Package #3
B720331326	5	5	24JUN02	28JUN02	24DEC02	31DEC02	127	Int. Rvw WTP Electrical Work Pckg
B720331327	5	5	01JUL02	06JUL02	02JAN03	08JAN03	127	Revise WTP Electrical Work Pckg
B720331340	5	5	01JUL02	06JUL02	02JAN03	08JAN03	127	Prepare & Issue WTP Electrical S/C Bid RFP
B720331345	20	20	09JUL02	05AUG02	09JAN03	05FEB03	127	WTP Electrical Offerors Prep. & Submit Bids
B720331350	4	4	06AUG02	09AUG02	06FEB03	11FEB03	127	Rvw WTP Electrical Contractor Bids
B720331355	1	1	12AUG02	12AUG02	12FEB03	12FEB03	127	Request USACE Consent TO Award WTP Electrical
B720331360	5	5	13AUG02	19AUG02	13FEB03	20FEB03	127	USACE Consent to WTP Electrical Sub
B720331365	5	5	13AUG02	19AUG02	13FEB03	20FEB03	127	Prepare WTP Electrical Subcontract
B720331370	2	2	20AUG02	21AUG02	21FEB03	24FEB03	127	Award WTP Electrical Subcontract
B720331420	75*	0*	14JUN01A	28SEP01A	14JUN01A	28SEP01A		Inclined Plate Clarifier SubC - Work Pkg & Award*
B720331425	10	0	14JUN01A	27JUN01A	14JUN01A	27JUN01A		Prepare Inclined Plate Clarifier Work Package #4
B720331435	10	0	28JUN01A	23JUL01A	28JUN01A	23JUL01A		Finalize Inclined Plate Clarifier Work Pkg (#4)
B720331440	5	0	24JUL01A	30JUL01A	24JUL01A	30JUL01A		Prepare & Issue Inclined Plate Clarifier Bid RFP
B720331445	11	0	31JUL01A	15AUG01A	31JUL01A	15AUG01A		Plate Clarifier Offerors Prepare & Submit Bids
B720331450	4	0	16AUG01A	23AUG01A	16AUG01A	23AUG01A		Rvw Inclined Plate Clarifier Contractor Bids
B720331455	1	0	12SEP01A	12SEP01A	12SEP01A	12SEP01A		Request USACE Consent for Award of Inclined Plat
B720331460	5	0	13SEP01A	14SEP01A	13SEP01A	14SEP01A		USACE Consent to Inclined Plate Clarifier Sub
B720331465	10	0	13SEP01A	28SEP01A	13SEP01A	28SEP01A		Prepare Inclined Plate Clarifier Subcontract
B720331470	0	0		28SEP01A		28SEP01A		NTP for Plate Clarifier Engineering Submittals
B720331520	84*	30*	18MAR02A	15JUL02	18MAR02A	24OCT02	72	GAC System SubContract - Work Pkg & Award*
B720331525	20	0	18MAR02A	10MAY02A	18MAR02A	10MAY02A		Prepare Draft GAC Work Pckg #5
B720331526	5	0	13MAY02A	24MAY02A	13MAY02A	24MAY02A		Int. Rvw Draft GAC Work Package
B720331527	5	5	28MAY02A	07JUN02	26MAY02A	19SEP02	72	Revise WWTP GAC Work Pckg
B720331540	5	5	07JUN02	13JUN02	19SEP02	25SEP02	72	Prep. & Issue GAC Bid RFP
B720331545	10	10	14JUN02	27JUN02	26SEP02	09OCT02	72	GAC System Vendor Offerors Prep. & Submit Bids
B720331550	4	4	28JUN02	03JUL02	10OCT02	15OCT02	72	Rvw GAC Contractor Bids
B720331555	1	1	05JUL02	05JUL02	16OCT02	16OCT02	72	Request USACE Consent for Award of GAC
B720331560	5	5	08JUL02	12JUL02	17OCT02	23OCT02	72	USACE Consent to GAC Subcontractor
B720331565	5	5	08JUL02	12JUL02	17OCT02	23OCT02	72	Prepare GAC Subcontract
B720331570	1	1	15JUL02	15JUL02	24OCT02	24OCT02	72	Award GAC Subcontract
B720331620	51*	37*	13MAY02A	24JUL02	13MAY02A	24JAN03	127	Sand Filter SystemSubContract -Work Pkg & Award*
B720331625	20	6	13MAY02A	10JUN02	13MAY02A	25OCT02	97	Prepare Draft Sand Filter System Work Package #6
B720331626	5	5	11JUN02	17JUN02	28OCT02	01NOV02	97	Int. Rvw Draft Sand Filter System Work Package

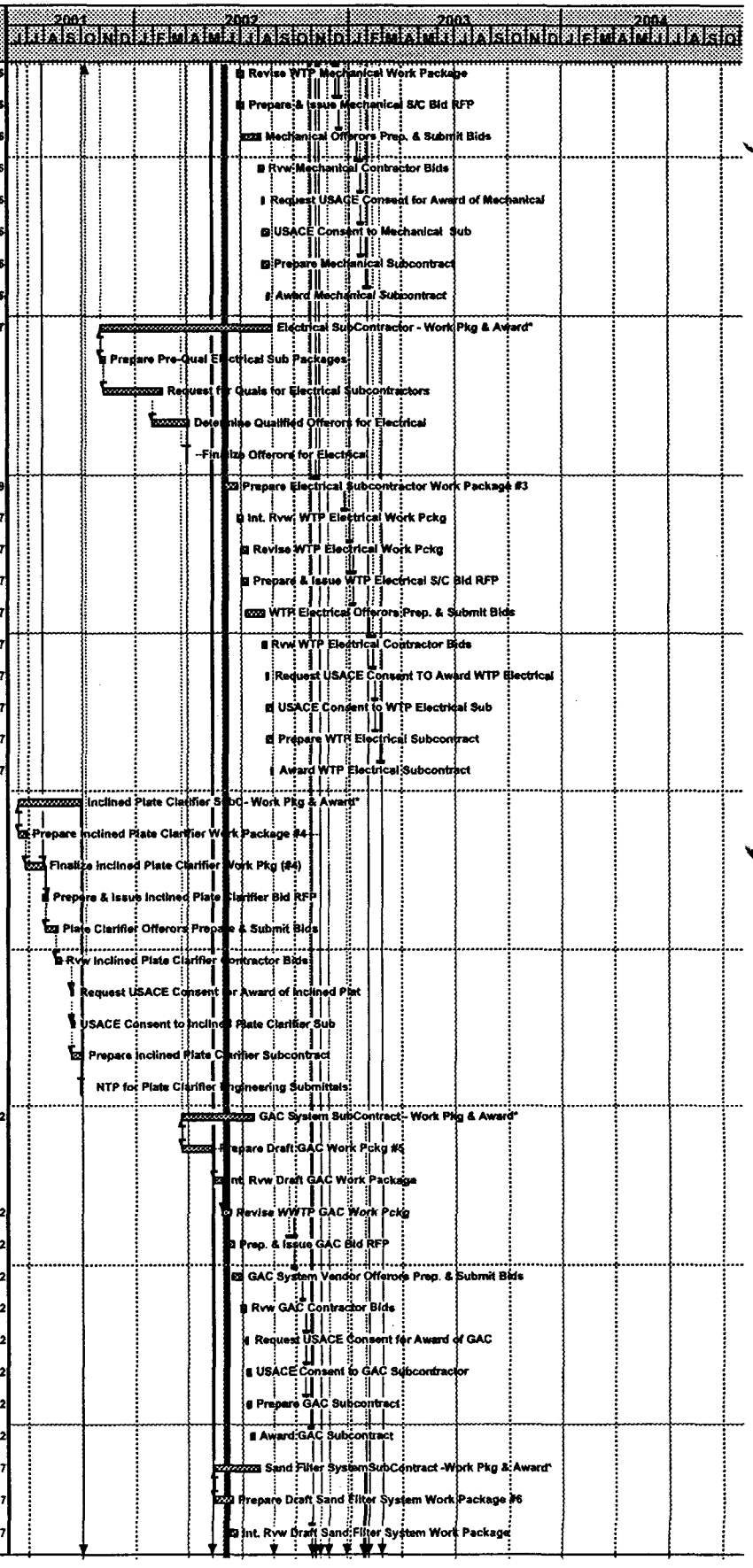

Start Date	01MAR94	TR2F	Sheet 2 of 5	
Finish Date	10JAN11	WTP CONSTRUCTION: EARLY & LATE DATES		
Data Date	03JUN02			
Run Date	06JUN02 11:18			

Date	Revision	Checked	Approved

© Primavera Systems, Inc.

Activity ID	O D	R D	Early Start	Early Finish	Late Start	Late Finish	T F
B720331627	5	5	18JUN02	24JUN02	04NOV02	08NOV02	97
B720331640	5	5	18JUN02	24JUN02	04NOV02	08NOV02	97
331645	10	10	25JUN02	09JUL02	26DEC02	09JAN03	127
B720331650	4	4	10JUL02	15JUL02	10JAN03	15JAN03	127
B720331655	1	1	16JUL02	16JUL02	16JAN03	16JAN03	127
B720331660	5	5	17JUL02	23JUL02	17JAN03	23JAN03	127
B720331665	5	5	17JUL02	23JUL02	17JAN03	23JAN03	127
B720331670	1	1	24JUL02	24JUL02	24JAN03	24JAN03	127
B720331720	51*	51*	25JUN02	05SEP02	11NOV02	24JAN03	97
B720331725	20	20	25JUN02*	23JUL02	11NOV02	10DEC02	97
B720331726	5	5	24JUL02	30JUL02	11DEC02	17DEC02	97
B720331727	5	5	31JUL02	06AUG02	18DEC02	24DEC02	97
B720331740	5	5	31JUL02	06AUG02	18DEC02	24DEC02	97
B720331745	10	10	07AUG02	20AUG02	26DEC02	09JAN03	97
B720331750	4	4	21AUG02	26AUG02	10JAN03	15JAN03	97
B720331755	1	1	27AUG02	27AUG02	16JAN03	16JAN03	97
B720331760	5	5	28AUG02	04SEP02	17JAN03	23JAN03	97
B720331765	5	5	28AUG02	04SEP02	17JAN03	23JAN03	97
B720331770	1	1	05SEP02	05SEP02	24JAN03	24JAN03	97
B720331820	55*	55*	25JUN02	11SEP02	26NOV02	14FEB03	108
B720331825	20	20	25JUN02	23JUL02	26NOV02	26DEC02	108
B720331826	5	5	24JUL02	30JUL02	27DEC02	03JAN03	108
B720331827	5	5	31JUL02	06AUG02	06JAN03	10JAN03	108
B720331840	5	5	31JUL02	06AUG02	06JAN03	10JAN03	108
20331845	10	10	07AUG02	20AUG02	13JAN03	24JAN03	108
20331850	4	4	21AUG02	26AUG02	27JAN03	30JAN03	108
B720331855	1	1	27AUG02	27AUG02	31JAN03	31JAN03	108
B720331860	5	5	28AUG02	04SEP02	03FEB03	07FEB03	108
B720331865	5	5	28AUG02	04SEP02	03FEB03	07FEB03	108
B720331870	5	5	05SEP02	11SEP02	10FEB03	14FEB03	108
B720331920	45*	45*	28OCT02	02JAN03	26NOV02	31JAN03	21
B720331925	10	10	28OCT02*	08NOV02	26NOV02	11DEC02	21
B720331926	5	5	11NOV02	15NOV02	12DEC02	18DEC02	21
B720331927	5	5	18NOV02	22NOV02	19DEC02	26DEC02	21
B720331940	5	5	18NOV02	22NOV02	19DEC02	26DEC02	21
B720331945	10	10	25NOV02	10DEC02	27DEC02	10JAN03	21
B720331950	4	4	11DEC02	16DEC02	13JAN03	16JAN03	21
B720331955	1	1	17DEC02	17DEC02	17JAN03	17JAN03	21
B720331960	5	5	18DEC02	24DEC02	20JAN03	24JAN03	21
B720331965	5	5	18DEC02	24DEC02	20JAN03	24JAN03	21
B720331970	5	5	26DEC02	02JAN03	27JAN03	31JAN03	21
TO#24 - NBH CONSTRUCT (UPPER & LOWER							
WATER TREATMENT PLANT WORK PLAN							
C4WC000000	37*	18*	06MAY02A	26JUN02	06MAY02A	16SEP02	56
C4WC000004	5	0	06MAY02A	10MAY02A	06MAY02A	10MAY02A	
C4WC000005	15	3	10MAY02A	05JUN02	10MAY02A	23AUG02	56
C4WC000010	10	10	06JUN02	19JUN02	26AUG02	09SEP02	56
C4WC000015	5	5	20JUN02	26JUN02	10SEP02	16SEP02	56

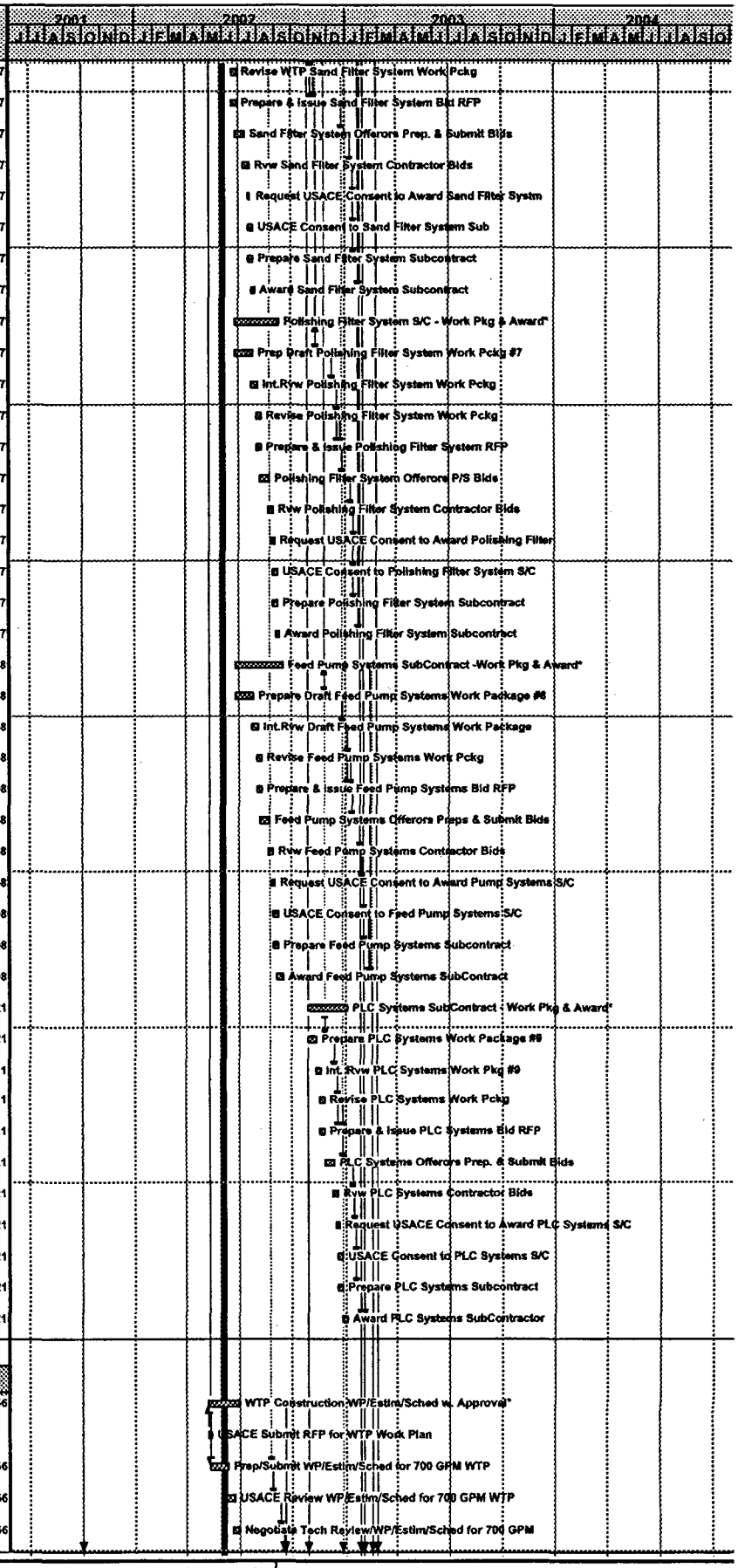

Start Date	01MAR94
Finish Date	10JAN11
Data Date	03JUN02
Run Date	06JUN02 11:18

© Primavera Systems, Inc.

TR2F

Sheet 3 of 5

WTP CONSTRUCTION: EARLY & LATE DATES

Date	Revision	Checked	Approved

Activity ID	O D	R D	Early Start	Early Finish	Late Start	Late Finish	T F
B720331627	5	5	18JUN02	24JUN02	04NOV02	08NOV02	97
B720331640	5	5	18JUN02	24JUN02	04NOV02	08NOV02	97
331645	10	10	25JUN02	09JUL02	26DEC02	09JAN03	127
B720331650	4	4	10JUL02	15JUL02	10JAN03	15JAN03	127
B720331655	1	1	16JUL02	16JUL02	16JAN03	16JAN03	127
B720331660	5	5	17JUL02	23JUL02	17JAN03	23JAN03	127
B720331665	5	5	17JUL02	23JUL02	17JAN03	23JAN03	127
B720331670	1	1	24JUL02	24JUL02	24JAN03	24JAN03	127
B720331720	51*	51*	25JUN02	05SEP02	11NOV02	24JAN03	97
B720331725	20	20	25JUN02*	23JUL02	11NOV02	10DEC02	97
B720331726	5	5	24JUL02	30JUL02	11DEC02	17DEC02	97
B720331727	5	5	31JUL02	06AUG02	18DEC02	24DEC02	97
B720331740	5	5	31JUL02	06AUG02	18DEC02	24DEC02	97
B720331745	10	10	07AUG02	20AUG02	26DEC02	09JAN03	97
B720331750	4	4	21AUG02	26AUG02	10JAN03	15JAN03	97
B720331755	1	1	27AUG02	27AUG02	16JAN03	16JAN03	97
B720331760	5	5	28AUG02	04SEP02	17JAN03	23JAN03	97
B720331765	5	5	28AUG02	04SEP02	17JAN03	23JAN03	97
B720331770	1	1	05SEP02	05SEP02	24JAN03	24JAN03	97
B720331820	55*	55*	25JUN02	11SEP02	26NOV02	14FEB03	108
B720331825	20	20	25JUN02	23JUL02	26NOV02	26DEC02	108
B720331826	5	5	24JUL02	30JUL02	27DEC02	03JAN03	108
B720331827	5	5	31JUL02	06AUG02	06JAN03	10JAN03	108
B720331840	5	5	31JUL02	06AUG02	06JAN03	10JAN03	108
20331845	10	10	07AUG02	20AUG02	13JAN03	24JAN03	108
20331850	4	4	21AUG02	26AUG02	27JAN03	30JAN03	108
B720331855	1	1	27AUG02	27AUG02	31JAN03	31JAN03	108
B720331860	5	5	28AUG02	04SEP02	03FEB03	07FEB03	108
B720331865	5	5	28AUG02	04SEP02	03FEB03	07FEB03	108
B720331870	5	5	05SEP02	11SEP02	10FEB03	14FEB03	108
B720331920	45*	45*	28OCT02	02JAN03	26NOV02	31JAN03	21
B720331925	10	10	28OCT02*	08NOV02	26NOV02	11DEC02	21
B720331926	5	5	11NOV02	15NOV02	12DEC02	18DEC02	21
B720331927	5	5	18NOV02	22NOV02	19DEC02	26DEC02	21
B720331940	5	5	18NOV02	22NOV02	19DEC02	26DEC02	21
B720331945	10	10	25NOV02	10DEC02	27DEC02	10JAN03	21
B720331950	4	4	11DEC02	16DEC02	13JAN03	16JAN03	21
B720331955	1	1	17DEC02	17DEC02	17JAN03	17JAN03	21
B720331960	5	5	18DEC02	24DEC02	20JAN03	24JAN03	21
B720331965	5	5	18DEC02	24DEC02	20JAN03	24JAN03	21
B720331970	5	5	26DEC02	02JAN03	27JAN03	31JAN03	21
TO#24 - NBH CONSTRUCT (UPPER & LOWER							
WATER TREATMENT PLANT WORK PLAN							
C4WC000000	37*	18*	06MAY02A	26JUN02	06MAY02A	16SEP02	56
C4WC000004	5	0	06MAY02A	10MAY02A	06MAY02A	10MAY02A	
C4WC000005	15	3	10MAY02A	05JUN02	10MAY02A	23AUG02	56
C4WC000010	10	10	06JUN02	19JUN02	26AUG02	09SEP02	56
C4WC000015	5	5	20JUN02	26JUN02	10SEP02	16SEP02	56

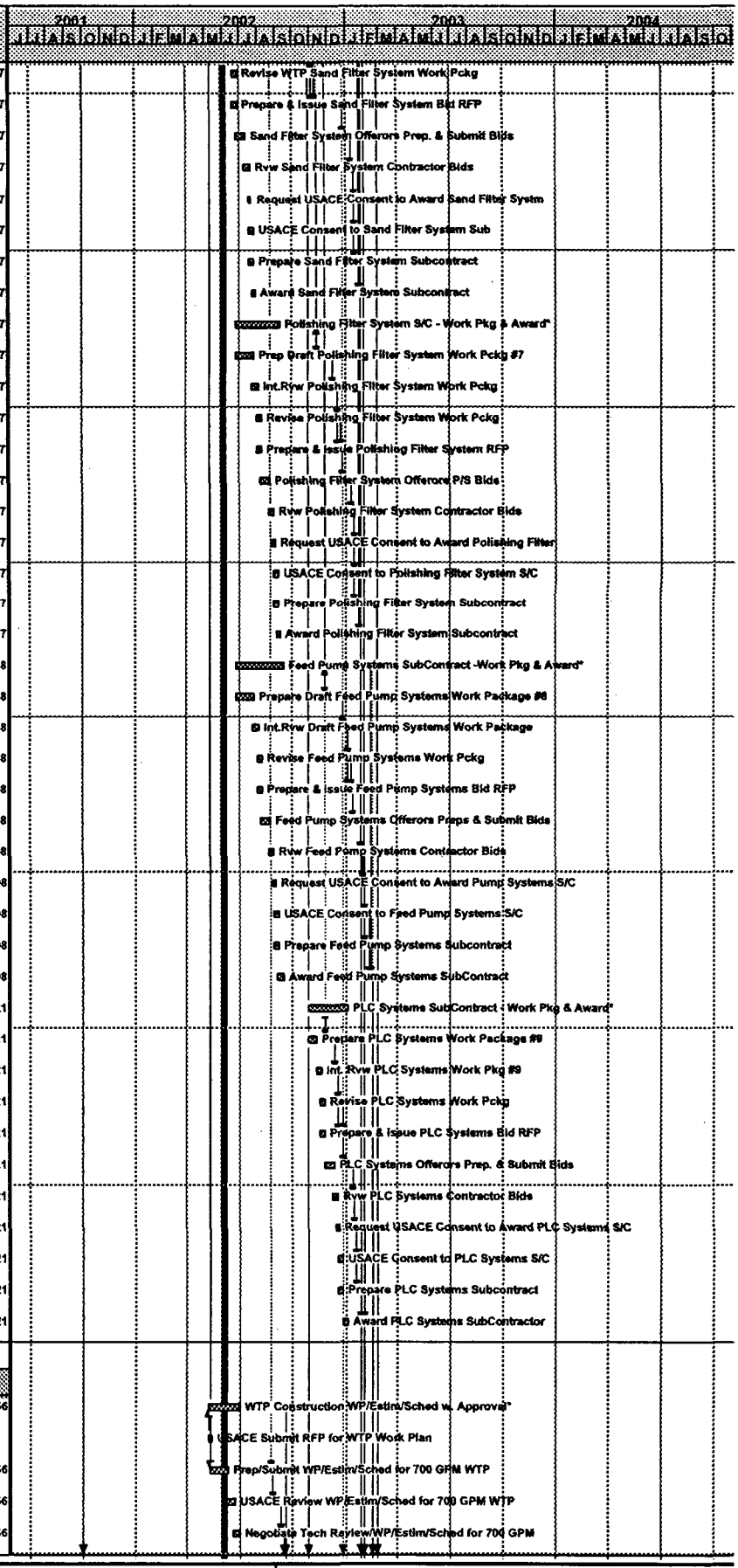

art Date	01MAR94
Finish Date	10JAN11
Data Date	03JUN02
Run Date	06JUN02 11:18

© Primavera Systems, Inc.

TR2F

Sheet 3 of 5

WTP CONSTRUCTION: EARLY & LATE DATES

Date	Revision	Checked	Approved

Activity ID	O D	R D	Early Start	Early Finish	Late Start	Late Finish	T F
C4WC011022	20	20	24SEP02	21OCT02	16JUL03	14AUG03	206
C4WC011023	10	10	25SEP02	08OCT02	12DEC02	26DEC02	54
C4WC011030	0	0		01OCT02*		26DEC02	59
C4WC011500	174*	174*	09OCT02	17JUN03	27DEC02	01JUL03	10
C4WC011529	5	5	09OCT02	15OCT02	27DEC02	03JAN03	54
C4WC011535	15	15	16OCT02	05NOV02	06JAN03	24JAN03	54
C4WC011537	10	10	06NOV02	19NOV02	27JAN03	07FEB03	54
C4WC011538	5	5	20NOV02	26NOV02	10FEB03	14FEB03	54
C4WC011539	20	20	27NOV02	27DEC02	18FEB03	17MAR03	54
C4WC011931	15	15	30DEC02	20JAN03	18MAR03	07APR03	54
C4WC012540	10	10	07JAN03	20JAN03	25MAR03	07APR03	54
C4WC012560	10	10	21JAN03	03FEB03	08APR03	21APR03	54
C4WC012571	10	10	21JAN03	03FEB03	22APR03	05MAY03	64
C4WC012585	10	10	08APR03	21APR03	22APR03	05MAY03	10
C4WC012591	10	10	08APR03	21APR03	22APR03	05MAY03	10
C4WC012595	5	5	15APR03	21APR03	29APR03	05MAY03	10
C4WC012622	10	10	21JAN03	03FEB03	22APR03	05MAY03	64
C4WC012625	10	10	22APR03	05MAY03	06MAY03	19MAY03	10
C4WC013560	10	10	21JAN03	03FEB03	22APR03	05MAY03	64
C4WC013561	10	10	04FEB03	18FEB03	06MAY03	19MAY03	64
C4WC013611	10	10	04FEB03	18FEB03	20MAY03	03JUN03	74
C4WC013612	10	10	21APR03	02MAY03	20MAY03	03JUN03	21
C4WC013631	10	10	19FEB03	04MAR03	20MAY03	03JUN03	64
C4WC013645	5	5	19FEB03	25FEB03	08AUG03	14AUG03	120
WC013659	5	5	04FEB03	10FEB03	13MAY03	19MAY03	69
WC013661	5	5	06MAY03	12MAY03	20MAY03	27MAY03	10
C4WC013662	5	5	13MAY03	19MAY03	28MAY03	03JUN03	10
C4WC013990	5	5	22APR03	28APR03	28MAY03	03JUN03	25
C4WC020621	20	20	20MAY03	17JUN03	04JUN03	01JUL03	10
C4WC020651	0	0		17JUN03		01JUL03*	10

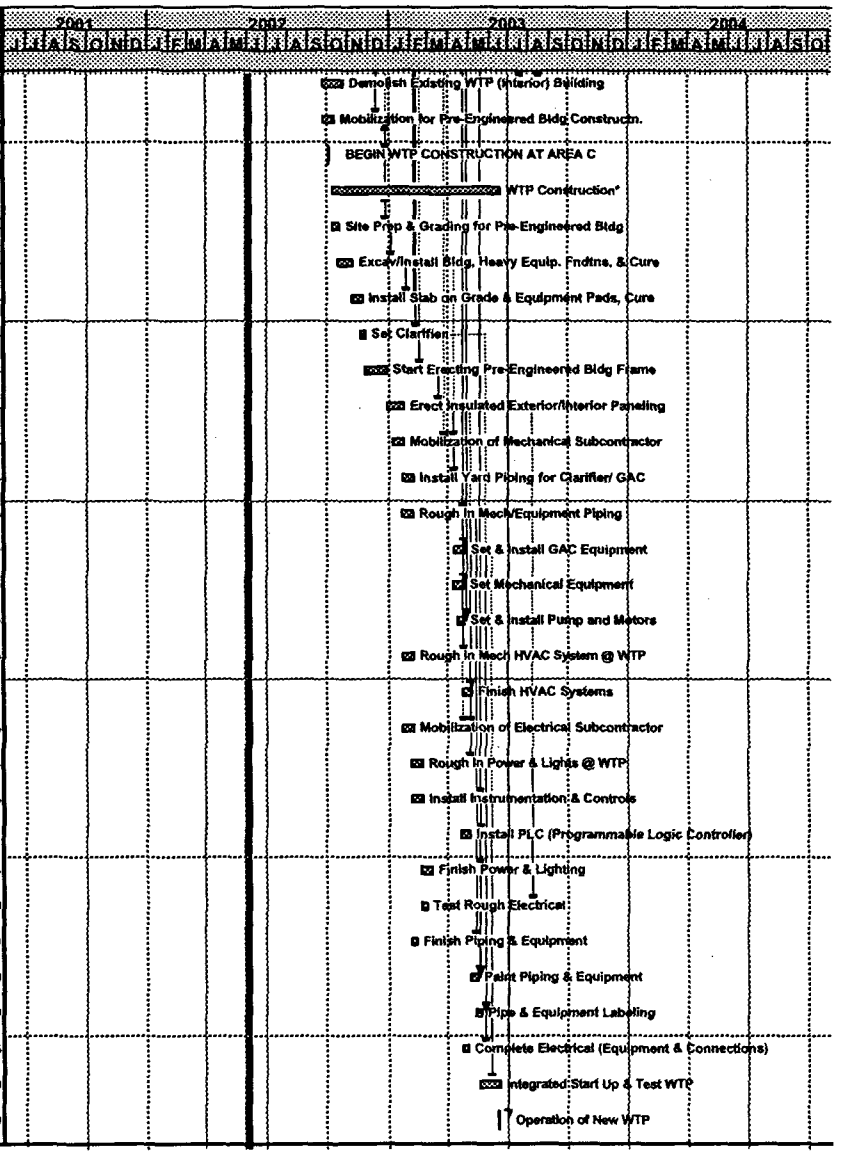

Start Date 01MAR94		TR2F	Sheet 5 of 5			
Finish Date 10JAN11		WTP CONSTRUCTION: EARLY & LATE DATES		Date	Revision	Checked	Approved
Data Date 03JUN02							
Run Date 06JUN02 11:18							

© Primavera Systems, Inc.

Appendix I

Submittal Register

SUBMITTAL REGISTER

CONTRACT NO. DACW33-94-D-0002

TITLE AND LOCATION: New Bedford Harbor Water Treatment Plant

CONTRACTOR

ACTIVITY NO	TRANSMITTAL NO	SPEC SECT	DESCRIPTION ITEM SUBMITTED	PARAG# RAPH	CLASSIFICATION	GOVT OR A/E REVWR	CONTRACTOR: SCHEDULE DATES			CONTRACTOR ACTION		DATE FWD TO APPR AUTH/ DATE RCD FROM CONTR	APPROVING AUTHORITY				MAILED TO CONTR/ DATE RCD FRM APPR AUTH	REMARKS
							SUBMIT	APPROVAL NEEDED BY	MATERIAL NEEDED BY	ACTION CODE	DATE OF ACTION		DATE FWD TO OTHER REVIEWER	DATE RCD FROM OTH REVIEWER	ACTION CODE	DATE OF ACTION		
(a)	(b)	(c)	(d)	(e)	(f)		(g)	(h)	(i)	(j)	(k)	(l)	(m)	(n)	(o)	(p)	(q)	(r)
		01356	SD-04 Samples															
			Turbidity Curtain															
			GA															
			Filter Fabric Mill Certificates															
			FIO															
		01410	SD-01 Preconstruction Submittals															
			Environmental Protection Plan	1.2.2														
			GA															
		01451	SD-01 Preconstruction Submittals															
			Contractor Quality Control Plan															
			GA															
		01720	SD-07 Certificates															
			Surveyor and Professional															
			Engineer Qualifications															
			FIO															
		01780	SD-11 Closeout Submittals															
			Record Drawings	1.2.1														
			GA															
			Record of Equipment and															
			Materials															
			Warranty Management Plan	1.3.1														
			Pre-Final Inspection Punch-List															
			FIO															
		02315	SD-06 Test Reports															
			Field Density Tests															
			GA															

SUBMITTAL REGISTER

CONTRACT NO.
DACW33-94-D-0002

TITLE AND LOCATION
New Bedford Harbor Water Treatment Plant

CONTRACTOR

ACTIVITY NO	TRANSMITTAL NO	SPEC SECT	DESCRIPTION ITEM SUBMITTED	PARAGRAPH #	CLASSIFICATION	GOVT OR A/E REVWR	CONTRACTOR: SCHEDULE DATES			CONTRACTOR ACTION			APPROVING AUTHORITY					MAILED TO CONTR/ DATE RCD FRM APPR AUTH	REMARKS
							SUBMIT	APPROVAL NEEDED BY	MATERIAL NEEDED BY	ACTION CODE	DATE OF ACTION	DATE FWD TO APPR AUTH/ DATE RCD FROM CONTR	DATE FWD TO OTHER REVIEWER	DATE RCD FROM OTH REVIEWER	ACTION CODE	DATE OF ACTION		
(a)	(b)	(c)	(d)	(e)	(f)		(g)	(h)	(i)	(j)	(k)	(l)	(m)	(n)	(o)	(p)	(q)	(r)
		02315	Testing of Fill Materials															
			SD-07 Certificates															
			Testing Laboratory Qualifications															
			GA															
			Certified Clean Materials															
		02316	SD-06 Test Reports															
			Field Density Tests	3.4.3														
			GA															
			Testing of Backfill Materials	3.4.2														
			SD-07 Certificates															
			Testing Laboratory Qualifications															
			GA															
			Certified Clean Materials															
		02531	SD-03 Product Data															
			Product(s)															
			GA															
			SD-07 Certificates															
			Portland Cement	2.7.1														
			GA															
			Pipeline Leakage Tests															
			Pipeline Deflection Tests															
			SD-08 Manufacturer's Instructions															
			Placing Pipe															
			FIO															
		02556	SD-02 Shop Drawings															

SUBMITTAL REGISTER

CONTRACT NO.
DACW33-94-D-0002

TITLE AND LOCATION
New Bedford Harbor Water Treatment Plant

CONTRACTOR

ACTIVITY NO	TRANSMITTAL NO	SPEC SECT	DESCRIPTION ITEM SUBMITTED	PARAGRAPH #	CLASSIFICATION	GOVT OR A/E REVWR	CONTRACTOR: SCHEDULE DATES			CONTRACTOR ACTION			APPROVING AUTHORITY					MAILED TO CONTR/ DATE RCD FRM APPR AUTH	REMARKS
							SUBMIT	APPROVAL NEEDED BY	MATERIAL NEEDED BY	ACTION CODE	DATE OF ACTION	DATE FWD TO APPR AUTH/ DATE RCD FROM CONTR	DATE FWD TO OTHER REVIEWER	DATE RCD FROM OTH REVIEWER	ACTION CODE	DATE OF ACTION			
(a)	(b)	(c)	(d)	(e)	(f)		(g)	(h)	(i)	(j)	(k)	(l)	(m)	(n)	(o)	(p)		(q)	(r)
		02556	Pipe, Fittings, and Associated	2.1															
			Materials																
			GA																
			SD-03 Product Data																
			Materials and Equipment	1.3.3															
			GA																
			Spare Parts Data																
			Connections to Existing Lines	3.12															
			Welding Steel Piping	1.3.1															
			Jointing Polyethylene and	1.3.2															
			Fiberglass Piping																
			Connection and Abandonment																
			Plan																
			SD-06 Test Reports																
			Pressure and Leak Tests	3.14.2															
			GA																
			SD-07 Certificates																
			Utility Work	3.12.1															
			GA																
			Training	1.3.2															
			SD-10 Operation and Maintenance																
			Data																
			Gas Distribution System	3.6															
			GA																
		03100	SD-02 Shop Drawings																
			Formwork																

SUBMITTAL REGISTER

CONTRACT NO.
DACW33-94-D-0002

TITLE AND LOCATION
New Bedford Harbor Water Treatment Plant

CONTRACTOR

ACTIVITY NO	TRANSMITTAL NO	SPEC SECT	DESCRIPTION ITEM SUBMITTED	PARAG# PARAGRAPH	CLASSIFICATION	GOVT OR A/E REVWR	CONTRACTOR: SCHEDULE DATES			CONTRACTOR ACTION			APPROVING AUTHORITY				MAILED TO CONTR/	
							SUBMIT	APPROVAL NEEDED BY	MATERIAL NEEDED BY	ACTION CODE	DATE OF ACTION	DATE FWD TO APPR AUTH/ DATE RCD FROM CONTR	DATE FWD TO OTHER REVIEWER	DATE RCD FROM OTH REVIEWER	ACTION CODE	DATE OF ACTION	DATE RCD FRM APPR AUTH	REMARKS
(a)	(b)	(c)	(d)	(e)	(f)		(g)	(h)	(i)	(j)	(k)	(l)	(m)	(n)	(o)	(p)	(q)	(r)
		03100	GA															
			Cast-in-Place Foundation															
			SD-03 Product Data															
			Design	1.3														
			GA															
			Form Materials	2.1														
			FIO															
			Form Releasing Agents	2.1.7														
		03150	SD-02 Shop Drawings															
			Waterstops	2.4														
			GA															
			SD-03 Product Data															
			Preformed Expansion Joint Filler	2.2														
			GA															
			Sealant	2.3														
			Waterstops	2.4														
			SD-04 Samples															
			Lubricant for Preformed	2.3.2														
			Compression Seals															
			GA															
			Field-Molded Type	2.3.4														
			Non-metallic Materials	2.4.3														
			SD-07 Certificates															
			Preformed Expansion Joint Filler	2.2														
			GA															
			Sealant	2.3														

SUBMITTAL REGISTER

CONTRACT NO. DACW33-94-D-0002

TITLE AND LOCATION: New Bedford Harbor Water Treatment Plant

CONTRACTOR

ACTIVITY NO	TRANSMITTAL NO	SPEC SECT	DESCRIPTION ITEM SUBMITTED	PARAG# RAPH	CLASSIFICATION	GOVT OR A/E REVWR	CONTRACTOR: SCHEDULE DATES			CONTRACTOR ACTION			APPROVING AUTHORITY					REMARKS
							SUBMIT	APPROVAL NEEDED BY	MATERIAL NEEDED BY	ACTION CODE	DATE OF ACTION	DATE FWD TO APPR AUTH/ DATE RCD FROM CONTR	DATE FWD TO OTHER REVIEWER	DATE RCD FROM OTH REVIEWER	ACTION CODE	DATE OF ACTION	MAILED TO CONTR/ DATE RCD FRM APPR AUTH	
(a)	(b)	(c)	(d)	(e)	(f)		(g)	(h)	(i)	(j)	(k)	(l)	(m)	(n)	(o)	(p)	(q)	(r)
		03150	Waterstops	2.4														
		03200	SD-02 Shop Drawings															
			Concrete Reinforcement System															
			GA															
			SD-07 Certificates															
			Reinforcing Steel	2.3														
			GA															
		03300	SD-03 Product Data															
			Mixture Proportions	1.9														
			GA															
			SD-04 Samples															
			Surface Retarder	2.3.5														
			GA,															
			SD-06 Test Reports															
			Testing and Inspection for	3.17														
			Contractor Quality Control															
			GA															
			SD-07 Certificates															
			Qualifications	1.5														
			GA															
		04200	SD-02 Shop Drawings															
			Masonry Work															
			GA															
			SD-03 Product Data															
			Cold Weather Installation	3.1.2														
			GA															

SUBMITTAL REGISTER

CONTRACT NO.
DACW33-94-D-0002

TITLE AND LOCATION
New Bedford Harbor Water Treatment Plant

CONTRACTOR

ACTIVITY NO	TRANSMITTAL NO	SPEC SECT	DESCRIPTION ITEM SUBMITTED	PARAGRAPH #	CLASSIFICATION	GOVT OR A/E REVWR	CONTRACTOR: SCHEDULE DATES			CONTRACTOR ACTION			APPROVING AUTHORITY					REMARKS
							SUBMIT	APPROVAL NEEDED BY	MATERIAL NEEDED BY	ACTION CODE	DATE OF ACTION	DATE FWD TO APPR AUTH/ DATE RCD FROM CONTR	DATE FWD TO OTHER REVIEWER	DATE RCD FROM OTH REVIEWER	ACTION CODE	DATE OF ACTION	MAILED TO CONTR/ DATE RCD FRM APPR AUTH	
(a)	(b)	(c)	(d)	(e)	(f)		(g)	(h)	(i)	(j)	(k)	(l)	(m)	(n)	(o)	(p)	(q)	(r)
		04200	SD-06 Test Reports															
			Field Testing of Mortar	3.26.1														
			GA															
			Field Testing of Grout	3.26.2														
			Fire-rated CMU	2.4.3														
			SD-07 Certificates															
			Concrete Masonry Units (CMU)	2.4														
			FIO															
			Anchors, Ties, and Bar	2.12														
			Positioners															
			Expansion-Joint Materials	2.16														
			Joint Reinforcement	2.13														
			Reinforcing Steel Bars and Rods	2.14														
			Masonry Cement															
			Precast Concrete Items	2.8														
			Mortar Admixtures															
			Grout Admixtures															
		05120	SD-02 Shop Drawings															
			Structural Steel System															
			GA.															
			Structural Connections	3.2.1														
			SD-03 Product Data															
			Erection	3.2														
			GA															
			Welding	3.3														
			GA.															

SUBMITTAL REGISTER

CONTRACT NO.
DACW33-94-D-0002

TITLE AND LOCATION
New Bedford Harbor Water Treatment Plant

CONTRACTOR

ACTIVITY NO	TRANSMITTAL NO	SPEC SECT	DESCRIPTION ITEM SUBMITTED	PARAGRAPH #	CLASSIFICATION	GOVT OR A/E REVWR	CONTRACTOR: SCHEDULE DATES			CONTRACTOR ACTION			APPROVING AUTHORITY					MAILED TO CONTR/ DATE RCD FRM APPR AUTH	REMARKS
							SUBMIT	APPROVAL NEEDED BY	MATERIAL NEEDED BY	ACTION CODE	DATE OF ACTION	DATE FWD TO APPR AUTH/ DATE RCD FROM CONTR	DATE FWD TO OTHER REVIEWER	DATE RCD FROM OTH REVIEWER	ACTION CODE	DATE OF ACTION		
(a)	(b)	(c)	(d)	(e)	(f)		(g)	(h)	(i)	(j)	(k)	(l)	(m)	(n)	(o)	(p)	(q)	(r)
		05120	SD-07 Certificates															
			Mill Test Reports															
			GA.															
			Welder Qualifications															
			Welding Inspector	1.5														
			Fabrication	3.1														
		05500	SD-02 Shop Drawings															
			Miscellaneous Metal Items	1.6														
			GA															
			SD-06 Test Reports															
			Mill Test Reports															
			FIO															
			SD-07 Certificates															
			Welder Qualifications															
			FIO															
			Structural Steel Erector															
			Qualiications															
			Fabrication															
			GA															
			SD-08 Manufacturer's Instructions															
			Erection															
			FIO															
		07840	SD-02 Shop Drawings															
			Firestopping Materials	2.1														
			GA															
			SD-07 Certificates															

SUBMITTAL REGISTER

CONTRACT NO.
DACW33-94-D-0002

TITLE AND LOCATION
New Bedford Harbor Water Treatment Plant

CONTRACTOR

ACTIVITY NO	TRANSMITTAL NO	SPEC SECT	DESCRIPTION ITEM SUBMITTED	PARAGRAPH #	CLASSIFICATION	GOVT OR A/E REVWR	CONTRACTOR: SCHEDULE DATES			CONTRACTOR ACTION			APPROVING AUTHORITY					REMARKS
							SUBMIT	APPROVAL NEEDED BY	MATERIAL NEEDED BY	ACTION CODE	DATE OF ACTION	DATE FWD TO APPR AUTH/ DATE RCD FROM CONTR	DATE FWD TO OTHER REVIEWER	DATE RCD FROM OTH REVIEWER	ACTION CODE	DATE OF ACTION	MAILED TO CONTR/ DATE RCD FRM APPR AUTH	
(a)	(b)	(c)	(d)	(e)	(f)		(g)	(h)	(i)	(j)	(k)	(l)	(m)	(n)	(o)	(p)	(q)	(r)
		07840	Firestopping Materials	2.1														
			GA															
			Installer Qualifications	1.5														
			Inspection	3.3														
		07900	SD-03 Product Data															
			Backing	2.1														
			GA															
			Bond-Breaker	2.2														
			Sealant	2.5														
			SD-07 Certificates															
			Sealant	2.5														
			FIO															
		08110	SD-02 Shop Drawings															
			Doors and Frames	2.1														
			GA															
			SD-07 Certificates															
			Thermal Insulated Doors															
			FIO															
		08330	SD-02 Shop Drawings															
			Overhead Rolling Door Unit															
			GA															
			SD-03 Product Data															
			Overhead Rolling Door Unit															
			GA															
			SD-10 Operation and Maintenance															
			Data															

SUBMITTAL REGISTER

CONTRACT NO.
DACW33-94-D-0002

TITLE AND LOCATION
New Bedford Harbor Water Treatment Plant

CONTRACTOR

ACTIVITY NO	TRANSMITTAL NO	SPEC SECT	DESCRIPTION ITEM SUBMITTED	PARAG# RAPH	CLASSIFICATION	GOVT OR A/E REVWR	CONTRACTOR: SCHEDULE DATES			CONTRACTOR ACTION			APPROVING AUTHORITY					REMARKS
							SUBMIT	APPROVAL NEEDED BY	MATERIAL NEEDED BY	ACTION CODE	DATE OF ACTION	DATE FWD TO APPR AUTH/ DATE RCD FROM CONTR	DATE FWD TO OTHER REVIEWER	DATE RCD FROM OTH REVIEWER	ACTION CODE	DATE OF ACTION	MAILED TO CONTR/ DATE RCD FRM APPR AUTH	
(a)	(b)	(c)	(d)	(e)	(f)		(g)	(h)	(i)	(j)	(k)	(l)	(m)	(n)	(o)	(p)	(q)	(r)
		08330	Operation Manual															
			GA															
			Maintenance and Repair Manual															
			FIO															
		08510	SD-02 Shop Drawings															
			Steel Windows	1.4														
			GA															
			Insect Screens	2.5														
			FIO															
			SD-03 Product Data															
			Steel Windows	1.4														
			FIO															
			SD-04 Samples															
			Steel Windows	1.4														
			FIO															
			SD-07 Certificates															
			Steel Windows	1.4														
			FIO															
			SD-10 Operation and Maintenance															
			Data															
			Steel Windows	1.4														
			FIO															
		08700	SD-03 Product Data															
			Exit Device Accessories	2.5														
			GA															
			Hardware Schedule	1.3														

SUBMITTAL REGISTER

CONTRACT NO.
DACW33-94-D-0002

TITLE AND LOCATION
New Bedford Harbor Water Treatment Plant

CONTRACTOR

ACTIVITY NO	TRANSMITTAL NO	SPEC SECT	DESCRIPTION ITEM SUBMITTED	PARAGRAPH #	CLASSIFICATION	GOVT OR A/E REVWR	CONTRACTOR: SCHEDULE DATES			CONTRACTOR ACTION		DATE FWD TO APPR AUTH/ DATE RCD FROM CONTR	APPROVING AUTHORITY				MAILED TO CONTR/ DATE RCD FRM APPR AUTH	REMARKS
							SUBMIT	APPROVAL NEEDED BY	MATERIAL NEEDED BY	ACTION CODE	DATE OF ACTION		DATE FWD TO OTHER REVIEWER	DATE RCD FROM OTH REVIEWER	ACTION CODE	DATE OF ACTION		
(a)	(b)	(c)	(d)	(e)	(f)		(g)	(h)	(i)	(j)	(k)	(l)	(m)	(n)	(o)	(p)	(q)	(r)
		08330	Operation Manual															
			GA															
			Maintenance and Repair Manual															
			FIO															
		08510	SD-02 Shop Drawings															
			Steel Windows	1.4														
			GA															
			Insect Screens	2.5														
			FIO															
			SD-03 Product Data															
			Steel Windows	1.4														
			FIO															
			SD-04 Samples															
			Steel Windows	1.4														
			FIO															
			SD-07 Certificates															
			Steel Windows	1.4														
			FIO															
			SD-10 Operation and Maintenance															
			Data															
			Steel Windows	1.4														
			FIO															
		08700	SD-03 Product Data															
			Exit Device Accessories	2.5														
			GA															
			Hardware Schedule	1.3														

SUBMITTAL REGISTER

CONTRACT NO.
DACW33-94-D-0002

TITLE AND LOCATION
New Bedford Harbor Water Treatment Plant

CONTRACTOR

ACTIVITY NO	TRANSMITTAL NO	SPEC SECT	DESCRIPTION ITEM SUBMITTED	PARAG # RAPH	CLASSIFICATION	GOVT OR A/E REVWR	CONTRACTOR: SCHEDULE DATES			CONTRACTOR ACTION			APPROVING AUTHORITY					MAILED TO CONTR/ DATE RCD FRM APPR AUTH	REMARKS
							SUBMIT	APPROVAL NEEDED BY	MATERIAL NEEDED BY	ACTION CODE	DATE OF ACTION	DATE FWD TO APPR AUTH/ DATE RCD FROM CONTR	DATE FWD TO OTHER REVIEWER	DATE RCD FROM OTH REVIEWER	ACTION CODE	DATE OF ACTION		
(a)	(b)	(c)	(d)	(e)	(f)		(g)	(h)	(i)	(j)	(k)	(l)	(m)	(n)	(o)	(p)	(q)	(r)
		09250	FIO															
			Water-Resistant															
			Steel-Framing	2.6.2														
			Fire-Rated Gypsum Board	2.4.2														
			Cemetitious Backer Units															
		09510	SD-02 Shop Drawings															
			Approved Detail Drawings	1.3														
			GA															
			SD-03 Product Data															
			Acoustical Ceiling Systems	2.5														
			FIO															
			SD-06 Test Reports															
			Fire Resistive Ceilings	2.5														
			FIO															
			Ceiling Attenuation Class and															
			Test															
			SD-07 Certificates															
			Acoustical Units	2.1														
			FIO															
		09650	SD-03 Product Data															
			Resilient Flooring and															
			Accessories															
			FIO															
			SD-04 Samples															
			Flooring	3.2														
			FIO															

SUBMITTAL REGISTER

CONTRACT NO.
DACW33-94-D-0002

TITLE AND LOCATION
New Bedford Harbor Water Treatment Plant

CONTRACTOR

ACTIVITY NO	TRANSMITTAL NO	SPEC SECT	DESCRIPTION ITEM SUBMITTED	PARAGRAPH #	CLASSIFICATION	GOVT OR A/E REVWR	CONTRACTOR: SCHEDULE DATES			CONTRACTOR ACTION			APPROVING AUTHORITY					REMARKS
							SUBMIT	APPROVAL NEEDED BY	MATERIAL NEEDED BY	ACTION CODE	DATE OF ACTION	DATE FWD TO APPR AUTH/ DATE RCD FROM CONTR	DATE FWD TO OTHER REVIEWER	DATE RCD FROM OTH REVIEWER	ACTION CODE	DATE OF ACTION	MAILED TO CONTR/ DATE RCD FRM APPR AUTH	
(a)	(b)	(c)	(d)	(e)	(f)		(g)	(h)	(i)	(j)	(k)	(l)	(m)	(n)	(o)	(p)	(q)	(r)
		09650	SD-06 Test Reports															
			Moisture Test	3.3														
			FIO															
		09900	SD-03 Product Data															
			Paint	2.1														
			GA															
			SD-04 Samples															
			Moisture-Curing Polyurethane															
			FIO															
			Paint	2.1														
			SD-06 Test Reports															
			Paint	2.1														
			FIO															
			SD-07 Certificates															
			Lead	2.1.3														
			FIO															
			Mildewcide and Insecticide	2.1.2														
			Volatile Organic Compound	2.1.5														
			(VOC) Content															
			SD-08 Manufacturer's Instructions															
			Mixing and Thinning	3.3														
			FIO															
			Application	3.4														
		09910	SD-03 Product Data															
			High Solids Thin Film Epoxy															
			Flooring System															

SUBMITTAL REGISTER

CONTRACT NO.
DACW33-94-D-0002

TITLE AND LOCATION
New Bedford Harbor Water Treatment Plant

CONTRACTOR

ACTIVITY NO	TRANSMITTAL NO	SPEC SECT	DESCRIPTION ITEM SUBMITTED	PARAG# RAPH	CLASSIFICATION	GOVT OR A/E REVWR	CONTRACTOR: SCHEDULE DATES			CONTRACTOR ACTION			APPROVING AUTHORITY					REMARKS
							SUBMIT	APPROVAL NEEDED BY	MATERIAL NEEDED BY	ACTION CODE	DATE OF ACTION	DATE FWD TO APPR AUTH/ DATE RCD FROM CONTR	DATE FWD TO OTHER REVIEWER	DATE RCD FROM OTH REVIEWER	ACTION CODE	DATE OF ACTION	MAILED TO CONTR/ DATE RCD FRM APPR AUTH	
(a)	(b)	(c)	(d)	(e)	(f)	(g)	(h)	(i)	(j)	(k)	(l)	(m)	(n)	(o)	(p)	(q)	(r)	
		09910	GA															
			Material Safety Data Sheets															
			(MSDSs)															
			FIO															
			Cleaning and Thinner Solutions															
			SD-04 Samples															
			High Solids Thin Film Epoxy															
			Flooring System															
			GA															
			SD-07 Certificates															
			Qualifications of Applicator															
			GA															
		09930	SD-03 Product Data															
			Protective Coating System															
			GA															
			Material Safety Data Sheets															
			(MSDSs)															
			FIO															
			Cleaning and Thinner Solutions															
			SD-04 Samples															
			Protective Coating System															
			GA															
			SD-07 Certificates															
			Qualifications of Applicator															
			GA															
		10201	SD-02 Shop Drawings															

SUBMITTAL REGISTER

CONTRACT NO.
DACW33-94-D-0002

TITLE AND LOCATION
New Bedford Harbor Water Treatment Plant

CONTRACTOR

ACTIVITY NO	TRANSMITTAL NO	SPEC SECT	DESCRIPTION ITEM SUBMITTED	PARAGRAPH #	CLASSIFICATION	GOVT OR A/E REVWR	CONTRACTOR: SCHEDULE DATES			CONTRACTOR ACTION			APPROVING AUTHORITY					
							SUBMIT	APPROVAL NEEDED BY	MATERIAL NEEDED BY	ACTION CODE	DATE OF ACTION	DATE FWD TO APPR AUTH/ DATE RCD FROM CONTR	DATE FWD TO OTHER REVIEWER	DATE RCD FROM OTH REVIEWER	ACTION CODE	DATE OF ACTION	MAILED TO CONTR/ DATE RCD FRM APPR AUTH	REMARKS
(a)	(b)	(c)	(d)	(e)	(f)		(g)	(h)	(i)	(j)	(k)	(l)	(m)	(n)	(o)	(p)	(q)	(r)
		10201	Wall Louvers	2.2														
			GA															
			SD-04 Samples															
			Wall Louvers	2.2														
			GA															
		10430	SD-01 Preconstruction Submittals															
			Exterior Signs															
			FIO															
			SD-02 Shop Drawings															
			Exterior Signs															
			FIO															
			SD-03 Product Data															
			Exterior Signs															
			FIO															
			SD-04 Samples															
			Exterior Signs															
			FIO															
			SD-08 Manufacturer's Instructions															
			Exterior Signs															
			FIO															
		10440	SD-02 Shop Drawings															
			Interior Signage															
			GA															
			SD-03 Product Data															
			Interior Signage															
			GA															

SUBMITTAL REGISTER

CONTRACT NO.
DACW33-94-D-0002

TITLE AND LOCATION
New Bedford Harbor Water Treatment Plant

CONTRACTOR

ACTIVITY NO	TRANSMITTAL NO	SPEC SECT	DESCRIPTION ITEM SUBMITTED	PARAG# RAPH	CLASSIFICATION	GOVT OR A/E REVWR	CONTRACTOR: SCHEDULE DATES			CONTRACTOR ACTION			APPROVING AUTHORITY					MAILED TO CONTR/ DATE RCD FRM APPR AUTH	REMARKS
							SUBMIT	APPROVAL NEEDED BY	MATERIAL NEEDED BY	ACTION CODE	DATE OF ACTION	DATE FWD TO APPR AUTH/ DATE RCD FROM CONTR	DATE FWD TO OTHER REVIEWER	DATE RCD FROM OTH REVIEWER	ACTION CODE	DATE OF ACTION		
(a)	(b)	(c)	(d)	(e)	(f)	(g)	(h)	(i)	(j)	(k)	(l)	(m)	(n)	(o)	(p)	(q)	(r)	
		10440	SD-04 Samples															
			Interior Signage															
			GA															
		10800	SD-03 Product Data															
			Finishes	2.1.2														
			GA															
			Accessory Items	2.2														
		11240	SD-02 Shop Drawings															
			Adsorption Battery Components	2.2														
			GA															
			SD-03 Product Data															
			Activated Carbon Adsorption Units															
			GA															
			Activated Carbon	2.1.1														
			Material Safety Data Sheet															
			FIO															
			Adsorption Battery Components	2.2														
			Posting Framed Instructions	3.9														
			Delivery, Storage, and Handling	1.8														
			SD-07 Certificates															
			Activated Carbon	2.1.1														
			GA															
			Equipment	3.7.1														
			SD-10 Operation and Maintenance															
			Data															

SUBMITTAL REGISTER

CONTRACT NO.
DACW33-94-D-0002

TITLE AND LOCATION
New Bedford Harbor Water Treatment Plant

CONTRACTOR

ACTIVITY NO	TRANSMITTAL NO	SPEC SECT	DESCRIPTION ITEM SUBMITTED	PARAG# RAPH	CLASSIFICATION	GOVT OR A/E REVWR	CONTRACTOR: SCHEDULE DATES			CONTRACTOR ACTION			APPROVING AUTHORITY				MAILED TO CONTR/	
							SUBMIT	APPROVAL NEEDED BY	MATERIAL NEEDED BY	ACTION CODE	DATE OF ACTION	DATE FWD TO APPR AUTH/ DATE RCD FROM CONTR	DATE FWD TO OTHER REVIEWER	DATE RCD FROM OTH REVIEWER	ACTION CODE	DATE OF ACTION	DATE RCD FRM APPR AUTH	REMARKS
(a)	(b)	(c)	(d)	(e)	(f)		(g)	(h)	(i)	(j)	(k)	(l)	(m)	(n)	(o)	(p)	(q)	(r)
		11240	Complete Activated Carbon															
			Adsorption System															
			GA															
		11242	SD-01 Preconstruction Submittals															
			Chemical Feed Systems	2.1														
			GA															
			SD-02 Shop Drawings															
			Chemical Feed Systems	2.1														
			GA															
			SD-03 Product Data															
			Chemical Feed Systems	2.1														
			GA															
			SD-06 Test Reports															
			Testing	3.3														
			GA															
			SD-08 Manufacturer's Instructions															
			Chemical Feed Systems	2.1														
			SD-10 Operation and Maintenance															
			Data															
			Chemical Feed Systems	2.1														
			GA															
		11310	SD-02 Shop Drawings															
			Equipment Installation	3.1														
			GA															
			SD-03 Product Data															
			Pump System															

SUBMITTAL REGISTER

CONTRACT NO.
DACW33-94-D-0002

TITLE AND LOCATION
New Bedford Harbor Water Treatment Plant

CONTRACTOR

ACTIVITY NO	TRANSMITTAL NO	SPEC SECT	DESCRIPTION ITEM SUBMITTED	PARAGRAPH #	CLASSIFICATION	GOVT OR A/E REVWR	CONTRACTOR: SCHEDULE DATES			CONTRACTOR ACTION			APPROVING AUTHORITY					
							SUBMIT	APPROVAL NEEDED BY	MATERIAL NEEDED BY	ACTION CODE	DATE OF ACTION	DATE FWD TO APPR AUTH/ DATE RCD FROM CONTR	DATE FWD TO OTHER REVIEWER	DATE RCD FROM OTH REVIEWER	ACTION CODE	DATE OF ACTION	MAILED TO CONTR/ DATE RCD FRM APPR AUTH	REMARKS
(a)	(b)	(c)	(d)	(e)	(f)		(g)	(h)	(i)	(j)	(k)	(l)	(m)	(n)	(o)	(p)	(q)	(r)
		11310	GA															
			Spare Parts															
			FIO															
			Pump System Instructions															
			SD-06 Test Reports															
			Field Testing and Adjusting	3.3														
			Equipment															
			GA															
			SD-10 Operation and Maintenance															
			Data															
			Pump System															
			GA															
		11394	SD-02 Shop Drawings															
			Shop Drawings	3.5														
			GA															
			SD-03 Product Data															
			Posting Framed Instructions	3.10														
			FIO															
			Qualifications	1.4														
			GA															
			Media	2.3														
			Materials and Equipment	2.1														
			Control System	2.2.4														
			Spare Parts	2.13														
			SD-06 Test Reports															
			Acceptance Testing	3.11.3														

SUBMITTAL REGISTER

CONTRACT NO.
DACW33-94-D-0002

TITLE AND LOCATION
New Bedford Harbor Water Treatment Plant

CONTRACTOR

ACTIVITY NO	TRANSMITTAL NO	SPEC SECT	DESCRIPTION ITEM SUBMITTED	PARAG # PARAGRAPH	CLASSIFICATION	GOVT OR A/E REVWR	CONTRACTOR: SCHEDULE DATES			CONTRACTOR ACTION			APPROVING AUTHORITY					
							SUBMIT	APPROVAL NEEDED BY	MATERIAL NEEDED BY	ACTION CODE	DATE OF ACTION	DATE FWD TO APPR AUTH/ DATE RCD FROM CONTR	DATE FWD TO OTHER REVIEWER	DATE RCD FROM OTH REVIEWER	ACTION CODE	DATE OF ACTION	MAILED TO CONTR/ DATE RCD FRM APPR AUTH	REMARKS
(a)	(b)	(c)	(d)	(e)	(f)		(g)	(h)	(i)	(j)	(k)	(l)	(m)	(n)	(o)	(p)	(q)	(r)
		11394	GA															
			Factory Tests															
			SD-07 Certificates															
			Materials and Equipment	2.1														
			GA															
			SD-10 Operation and Maintenance															
			Data															
			Field Training	3.12														
			FIO															
		11395	SD-02 Shop Drawings															
			Shop Drawings															
			GA															
			SD-03 Product Data															
			Posting Framed Instructions															
			FIO															
			Qualifications	1.4														
			GA															
			Media															
			Materials and Equipment	2.1														
			Spare Parts	2.13														
			SD-07 Certificates															
			Materials and Equipment	2.1														
			GA															
			SD-10 Operation and Maintenance															
			Data															
			Field Training	3.12														

SUBMITTAL REGISTER

CONTRACT NO.
DACW33-94-D-0002

TITLE AND LOCATION
New Bedford Harbor Water Treatment Plant

CONTRACTOR

ACTIVITY NO	TRANSMITTAL NO	SPEC SECT	DESCRIPTION ITEM SUBMITTED	PARAG# RAPH	CLASSIFICATION	GOVT OR A/E REVWR	CONTRACTOR: SCHEDULE DATES			CONTRACTOR ACTION			APPROVING AUTHORITY					MAILED TO CONTR/ DATE RCD FRM APPR AUTH	REMARKS
							SUBMIT	APPROVAL NEEDED BY	MATERIAL NEEDED BY	ACTION CODE	DATE OF ACTION	DATE FWD TO APPR AUTH/ DATE RCD FROM CONTR	DATE FWD TO OTHER REVIEWER	DATE RCD FROM OTH REVIEWER	ACTION CODE	DATE OF ACTION		
(a)	(b)	(c)	(d)	(e)	(f)		(g)	(h)	(i)	(j)	(k)	(l)	(m)	(n)	(o)	(p)	(q)	(r)
		11395	FIO															
		11540	SD-03 Product Data															
			Clarifier Design															
			GA															
			SD-10 Operation and Maintenance															
			Data															
			Operation and Maintenance															
			(O&M) Manuals															
			GA,															
		13120	SD-02 Shop Drawings															
			Drawings															
			GA															
			SD-03 Product Data															
			Design Analysis	1.5														
			GA															
			Instruction Manuals															
			Erection	3.1														
			Qualifications	1.3.2														
			SD-04 Samples															
			Accessories	2.3.6														
			FIO															
			Roofing and Siding	2.3														
			Fasteners	2.4														
			Insulation	2.9														
			Gaskets and Insulating	2.11														
			Compounds															

SUBMITTAL REGISTER

CONTRACT NO.
DACW33-94-D-0002

TITLE AND LOCATION
New Bedford Harbor Water Treatment Plant

CONTRACTOR

ACTIVITY NO	TRANSMITTAL NO	SPEC SECT	DESCRIPTION ITEM SUBMITTED	PARAG# RAPH	CLASSIFICATION	GOVT OR A/E REVWR	CONTRACTOR: SCHEDULE DATES			CONTRACTOR ACTION			APPROVING AUTHORITY					REMARKS
							SUBMIT	APPROVAL NEEDED BY	MATERIAL NEEDED BY	ACTION CODE	DATE OF ACTION	DATE FWD TO APPR AUTH/ DATE RCD FROM CONTR	DATE FWD TO OTHER REVIEWER	DATE RCD FROM OTH REVIEWER	ACTION CODE	DATE OF ACTION	MAILED TO CONTR/ DATE RCD FRM APPR AUTH	
(a)	(b)	(c)	(d)	(e)	(f)		(g)	(h)	(i)	(j)	(k)	(l)	(m)	(n)	(o)	(p)	(q)	(r)
		13120	Sealant	2.10														
			Wall Liners															
			SD-07 Certificates															
			Metal Building Systems															
			GA															
		13405	SD-02 Shop Drawings															
			Installation	3.1.1														
			GA															
			Wiring	3.1.1														
			SD-03 Product Data															
			Instrumentation and Control	3.7														
			System															
			GA															
			Meters and Sensors															
			Training Manual	3.8														
			Performance Verification Test	3.5.2														
			(PVT)															
			SD-06 Test Reports															
			Testing, Adjusting and	3.5.1														
			Commissioning															
			GA															
			Performance Verification	3.5.2														
			Test(PVT)															
			SD-07 Certificates															
			Sensor and Control Wiring	3.3.2.2														
			GA															

SUBMITTAL REGISTER

CONTRACT NO.
DACW33-94-D-0002

TITLE AND LOCATION
New Bedford Harbor Water Treatment Plant

CONTRACTOR

ACTIVITY NO	TRANSMITTAL NO	SPEC SECT	DESCRIPTION ITEM SUBMITTED	PARAG # RAPH	CLASSIFICATION	GOVT OR A/E REVWR	CONTRACTOR: SCHEDULE DATES			CONTRACTOR ACTION			APPROVING AUTHORITY					REMARKS
							SUBMIT	APPROVAL NEEDED BY	MATERIAL NEEDED BY	ACTION CODE	DATE OF ACTION	DATE FWD TO APPR AUTH/ DATE RCD FROM CONTR	DATE FWD TO OTHER REVIEWER	DATE RCD FROM OTH REVIEWER	ACTION CODE	DATE OF ACTION	MAILED TO CONTR/ DATE RCD FRM APPR AUTH	
(a)	(b)	(c)	(d)	(e)	(f)		(g)	(h)	(i)	(j)	(k)	(l)	(m)	(n)	(o)	(p)	(q)	(r)
		13405	SD-10 Operation and Maintenance															
			Data															
			Instrumentation and Control	3.7														
			System															
			GA															
		13850	SD-02 Shop Drawings															
			Fire Alarm Reporting System	1.4.1														
			GA															
			SD-03 Product Data															
			Storage Batteries	2.2														
			GA															
			Voltage Drop															
			FIO															
			Spare Parts	2.8.4														
			Technical Data and Computer	1.5														
			Software															
			Training	3.6														
			Testing	3.5														
			SD-06 Test Reports															
			Testing	3.5														
			GA															
			SD-07 Certificates															
			Equipment															
			GA															
			Qualifications	1.3.7														

SUBMITTAL REGISTER

CONTRACT NO.
DACW33-94-D-0002

TITLE AND LOCATION
New Bedford Harbor Water Treatment Plant

CONTRACTOR

ACTIVITY NO	TRANSMITTAL NO	SPEC SECT	DESCRIPTION ITEM SUBMITTED	PARAG # RAPH	CLASSIFICATION	GOVT OR A/E REVWR	CONTRACTOR: SCHEDULE DATES			CONTRACTOR ACTION			APPROVING AUTHORITY					REMARKS
							SUBMIT	APPROVAL NEEDED BY	MATERIAL NEEDED BY	ACTION CODE	DATE OF ACTION	DATE FWD TO APPR AUTH/ DATE RCD FROM CONTR	DATE FWD TO OTHER REVIEWER	DATE RCD FROM OTH REVIEWER	ACTION CODE	DATE OF ACTION	MAILED TO CONTR/ DATE RCD FRM APPR AUTH	
(a)	(b)	(c)	(d)	(e)	(f)	(g)	(h)	(i)	(j)	(k)	(l)	(m)	(n)	(o)	(p)	(q)	(r)	
		13850	SD-10 Operation and Maintenance															
			Data															
			Technical Data and Computer	1.5														
			Software															
			GA															
		15080	SD-04 Samples															
			Thermal Insulation Materials															
			GA															
		15190	SD-02 Shop Drawings															
			Gas Piping System	3.2														
			GA															
			SD-03 Product Data															
			Qualifications															
			GA															
			SD-06 Test Reports															
			Testing															
			GA															
			Pressure Tests	3.16.1														
			Test With Gas	3.16.3														
		15200	SD-02 Shop Drawings															
			Pipe and Equipment	3.1.1														
			GA															
			SD-03 Product Data															
			Qualifications	1.4														
			GA															
			Welders	1.4.2														

SUBMITTAL REGISTER

CONTRACT NO. DACW33-94-D-0002

TITLE AND LOCATION: New Bedford Harbor Water Treatment Plant

CONTRACTOR

ACTIVITY NO	TRANSMITTAL NO	SPEC SECT	DESCRIPTION ITEM SUBMITTED	PARAGRAPH #	CLASSIFICATION	GOVT OR A/E REVWR	CONTRACTOR: SCHEDULE DATES			CONTRACTOR ACTION			APPROVING AUTHORITY				MAILED TO CONTR/ DATE RCD FRM APPR AUTH	REMARKS
							SUBMIT	APPROVAL NEEDED BY	MATERIAL NEEDED BY	ACTION CODE	DATE OF ACTION	DATE FWD TO APPR AUTH/ DATE RCD FROM CONTR	DATE FWD TO OTHER REVIEWER	DATE RCD FROM OTH REVIEWER	ACTION CODE	DATE OF ACTION		
(a)	(b)	(c)	(d)	(e)	(f)		(g)	(h)	(i)	(j)	(k)	(l)	(m)	(n)	(o)	(p)	(q)	(r)
		15200	Assistance and Training															
			Delivery, Storage and Handling	1.6														
			Materials and Equipment															
			FIO															
			Installation	1.9.2														
			Pipe Schedule	1.5														
			Valve Schedule															
			Operator Schedule															
			SD-06 Test Reports															
			Pipe Leakage Tests	3.13.2														
			GA															
			Hydrostatic Tests	3.13.1														
			Pneumatic Tests															
			Valve Testing	3.13.4														
			SD-07 Certificates															
			Plastic Piping System	2.2														
			GA															
			Contractor's Installation															
			SD-10 Operation and Maintenance															
			Data															
			Piping and Appurtenances	3.2														
			FIO															
		15400	SD-02 Shop Drawings															
			Plumbing System	3.9.1														
			GA															
			Electrical Schematics															

SUBMITTAL REGISTER

CONTRACT NO.
DACW33-94-D-0002

TITLE AND LOCATION
New Bedford Harbor Water Treatment Plant

CONTRACTOR

ACTIVITY NO	TRANSMITTAL NO	SPEC SECT	DESCRIPTION ITEM SUBMITTED	PARAGRAPH #	CLASSIFICATION	GOVT OR A/E REVWR	CONTRACTOR: SCHEDULE DATES			CONTRACTOR ACTION			APPROVING AUTHORITY					MAILED TO CONTR/ DATE RCD FRM APPR AUTH	REMARKS
							SUBMIT	APPROVAL NEEDED BY	MATERIAL NEEDED BY	ACTION CODE	DATE OF ACTION	DATE FWD TO APPR AUTH/ DATE RCD FROM CONTR	DATE FWD TO OTHER REVIEWER	DATE RCD FROM OTH REVIEWER	ACTION CODE	DATE OF ACTION		
(a)	(b)	(c)	(d)	(e)	(f)		(g)	(h)	(i)	(j)	(k)	(l)	(m)	(n)	(o)	(p)	(q)	(r)
		15400	SD-03 Product Data															
			Welding	1.3.1														
			GA															
			Plumbing Fixture Schedule	3.10														
			Vibration-Absorbing Features	3.4														
			SD-06 Test Reports															
			Tests, Flushing and Disinfection	3.9														
			GA															
			Backflow Prevention Assembly															
			Tests															
			SD-07 Certificates															
			Materials and Equipment															
			FIO															
			Bolts	2.1.1														
			SD-10 Operation and Maintenance															
			Data															
			Plumbing System	3.9.1														
			FIO															
		15565	SD-02 Shop Drawings															
			Heating System															
			GA.															
			Installation	3.1														
			SD-03 Product Data															
			Heating System															
			FIO.															
			SD-06 Test Reports															

SUBMITTAL REGISTER

CONTRACT NO.
DACW33-94-D-0002

TITLE AND LOCATION
New Bedford Harbor Water Treatment Plant

CONTRACTOR

ACTIVITY NO	TRANSMITTAL NO	SPEC SECT	DESCRIPTION ITEM SUBMITTED	PARAG# RAPH	CLASSIFICATION	GOVT OR A/E REVWR	CONTRACTOR: SCHEDULE DATES			CONTRACTOR ACTION			APPROVING AUTHORITY					
							SUBMIT	APPROVAL NEEDED BY	MATERIAL NEEDED BY	ACTION CODE	DATE OF ACTION	DATE FWD TO APPR AUTH/ DATE RCD FROM CONTR	DATE FWD TO OTHER REVIEWER	DATE RCD FROM OTH REVIEWER	ACTION CODE	DATE OF ACTION	MAILED TO CONTR/ DATE RCD FRM APPR AUTH	REMARKS
(a)	(b)	(c)	(d)	(e)	(f)		(g)	(h)	(i)	(j)	(k)	(l)	(m)	(n)	(o)	(p)	(q)	(r)
		15565	Testing, Adjusting, and Balancing	3.2														
			FIO.															
			SD-10 Operation and Maintenance															
			Data															
			Instructions	3.3														
			FIO.															
		15700	SD-02 Shop Drawings															
			Drawings															
			GA															
			SD-03 Product Data															
			Unitary Equipment	2.4														
			GA															
			Spare Parts Data															
			Posted Instructions	3.5														
			Verification of Dimensions	1.5.1														
			SD-07 Certificates															
			Unitary Equipment	2.4														
			GA															
			Service Organization	2.1														
			SD-10 Operation and Maintenance															
			Data															
			Operation Manuals															
			GA															
			Maintenance Manuals	3.5														
		15760	SD-03 Product Data															
			Unit heaters	2.1														

SUBMITTAL REGISTER

CONTRACT NO.
DACW33-94-D-0002

TITLE AND LOCATION
New Bedford Harbor Water Treatment Plant

CONTRACTOR

ACTIVITY NO	TRANSMITTAL NO	SPEC SECT	DESCRIPTION ITEM SUBMITTED	PARAGRAPH #	CLASSIFICATION	GOVT OR A/E REVWR	CONTRACTOR: SCHEDULE DATES			CONTRACTOR ACTION			APPROVING AUTHORITY					
							SUBMIT	APPROVAL NEEDED BY	MATERIAL NEEDED BY	ACTION CODE	DATE OF ACTION	DATE FWD TO APPR AUTH/ DATE RCD FROM CONTR	DATE FWD TO OTHER REVIEWER	DATE RCD FROM OTH REVIEWER	ACTION CODE	DATE OF ACTION	MAILED TO CONTR/ DATE RCD FRM APPR AUTH	REMARKS
(a)	(b)	(c)	(d)	(e)	(f)		(g)	(h)	(i)	(j)	(k)	(l)	(m)	(n)	(o)	(p)	(q)	(r)
		15760	GA															
			Infrared heaters	2.2														
			SD-10 Operation and Maintenance															
			Data															
			Unit heaters	2.1														
			GA															
			Infrared heaters	2.2														
		15895	SD-02 Shop Drawings															
			Drawings	3.1.9														
			GA															
			Installation	3.1														
			SD-03 Product Data															
			Components and Equipment	2.1														
			GA															
			Test Procedures															
			Welding Procedures															
			System Diagrams															
			Similar Services															
			Welding Joints															
			Testing, Adjusting and Balancing	3.6														
			Field Training	3.8														
			SD-06 Test Reports															
			Performance Tests	3.7														
			GA															
			SD-07 Certificates															
			Bolts															

SUBMITTAL REGISTER

CONTRACT NO.
DACW33-94-D-0002

TITLE AND LOCATION
New Bedford Harbor Water Treatment Plant

CONTRACTOR

ACTIVITY NO	TRANSMITTAL NO	SPEC SECT	DESCRIPTION ITEM SUBMITTED	PARAGRAPH #	CLASSIFICATION	GOVT OR A/E REVWR	CONTRACTOR: SCHEDULE DATES			CONTRACTOR ACTION			APPROVING AUTHORITY					
							SUBMIT	APPROVAL NEEDED BY	MATERIAL NEEDED BY	ACTION CODE	DATE OF ACTION	DATE FWD TO APPR AUTH/ DATE RCD FROM CONTR	DATE FWD TO OTHER REVIEWER	DATE RCD FROM OTH REVIEWER	ACTION CODE	DATE OF ACTION	MAILED TO CONTR/ DATE RCD FRM APPR AUTH	REMARKS
(a)	(b)	(c)	(d)	(e)	(f)		(g)	(h)	(i)	(j)	(k)	(l)	(m)	(n)	(o)	(p)	(q)	(r)
		15895	GA															
			SD-10 Operation and Maintenance															
			Data															
			Operating and Maintenance	3.8														
			Instructions															
			GA															
		15950	SD-02 Shop Drawings															
			Drawings	1.3.2														
			GA															
			SD-03 Product Data															
			HVAC Control System	1.5														
			GA															
			Service Organizations	2.1														
			Equipment Compliance Booklet	1.6														
			Commissioning Procedures	3.4														
			Performance Verification Test	1.6														
			Procedures															
			Training Course Requirements	3.6.1														
			SD-06 Test Reports															
			Commissioning Report	3.5.3														
			GA															
			Performance Verification Test	3.5.3														
			SD-10 Operation and Maintenance															
			Data															
			Operation Manual	1.5														
			GA															

SUBMITTAL REGISTER

CONTRACT NO.
DACW33-94-D-0002

TITLE AND LOCATION
New Bedford Harbor Water Treatment Plant

CONTRACTOR

ACTIVITY NO	TRANSMITTAL NO	SPEC SECT	DESCRIPTION ITEM SUBMITTED	PARAGRAPH #	CLASSIFICATION	GOVT OR A/E REVWR	CONTRACTOR: SCHEDULE DATES			CONTRACTOR ACTION			APPROVING AUTHORITY					
							SUBMIT	APPROVAL NEEDED BY	MATERIAL NEEDED BY	ACTION CODE	DATE OF ACTION	DATE FWD TO APPR AUTH/ DATE RCD FROM CONTR	DATE FWD TO OTHER REVIEWER	DATE RCD FROM OTH REVIEWER	ACTION CODE	DATE OF ACTION	MAILED TO CONTR/ DATE RCD FRM APPR AUTH	REMARKS
(a)	(b)	(c)	(d)	(e)	(f)		(g)	(h)	(i)	(j)	(k)	(l)	(m)	(n)	(o)	(p)	(q)	(r)
		15950	Maintenance and Repair Manual	1.6														
		15990	SD-02 Shop Drawings															
			TAB Schematic Drawings and	3.3														
			Report Forms															
			GA.															
			SD-03 Product Data															
			TAB Related HVAC Submittals	3.2														
			GA.															
			TAB Procedures	3.5.1														
			Calibration	1.4														
			Systems Readiness Check	3.5.2														
			TAB Execution	3.5.1														
			TAB Verification	3.5.4														
			SD-06 Test Reports															
			Design Review Report	3.1														
			GA.															
			Systems Readiness Check	3.5.2														
			TAB Report	3.5.3														
			TAB Verification Report	3.5.4														
			SD-07 Certificates															
			TAB Firm	1.5.1														
			GA.															
			TAB Specialist	1.5.2														
		16261	SD-02 Shop Drawings															
			Schematic diagrams	1.4.1														
			GA															

SUBMITTAL REGISTER

CONTRACT NO.
DACW33-94-D-0002

TITLE AND LOCATION
New Bedford Harbor Water Treatment Plant

CONTRACTOR

ACTIVITY NO	TRANSMITTAL NO	SPEC SECT	DESCRIPTION ITEM SUBMITTED	PARAGRAPH #	CLASSIFICATION	GOVT OR A/E REVWR	CONTRACTOR: SCHEDULE DATES			CONTRACTOR ACTION			APPROVING AUTHORITY				MAILED TO CONTR/	REMARKS
							SUBMIT	APPROVAL NEEDED BY	MATERIAL NEEDED BY	ACTION CODE	DATE OF ACTION	DATE FWD TO APPR AUTH/ DATE RCD FROM CONTR	DATE FWD TO OTHER REVIEWER	DATE RCD FROM OTH REVIEWER	ACTION CODE	DATE OF ACTION	DATE RCD FRM APPR AUTH	
(a)	(b)	(c)	(d)	(e)	(f)		(g)	(h)	(i)	(j)	(k)	(l)	(m)	(n)	(o)	(p)	(q)	(r)
		16261	Interconnecting diagrams	1.4.2														
			Installation drawings	1.4.3														
			SD-03 Product Data															
			Variable frequency drives	2.1														
			GA															
			SD-08 Manufacturer's Instructions															
			Installation instructions	1.4.4														
			GA															
			SD-09 Manufacturer's Field															
			Reports															
			VFD Factory Test Plan	2.5.1														
			GA															
			Factory test results															
			SD-10 Operation and Maintenance															
			Data															
			Variable frequency drives	2.1														
			GA															
		16415	SD-02 Shop Drawings															
			Interior Electrical Equipment															
			GA															
			SD-03 Product Data															
			Manufacturer's Catalog															
			FIO															
			Material, Equipment, and Fixture															
			Lists															
			Installation Procedures															

SUBMITTAL REGISTER

CONTRACT NO.
DACW33-94-D-0002

TITLE AND LOCATION
New Bedford Harbor Water Treatment Plant

CONTRACTOR

ACTIVITY NO	TRANSMITTAL NO	SPEC SECT	DESCRIPTION ITEM SUBMITTED	PARAG # RAPH	CLASSIFICATION	GOVT OR A/E REVWR	CONTRACTOR: SCHEDULE DATES			CONTRACTOR ACTION			APPROVING AUTHORITY					REMARKS
							SUBMIT	APPROVAL NEEDED BY	MATERIAL NEEDED BY	ACTION CODE	DATE OF ACTION	DATE FWD TO APPR AUTH/ DATE RCD FROM CONTR	DATE FWD TO OTHER REVIEWER	DATE RCD FROM OTH REVIEWER	ACTION CODE	DATE OF ACTION	MAILED TO CONTR/ DATE RCD FRM APPR AUTH	
(a)	(b)	(c)	(d)	(e)	(f)		(g)	(h)	(i)	(j)	(k)	(l)	(m)	(n)	(o)	(p)	(q)	(r)
		16415	As-Built Drawings	1.2.6														
			GA															
			Onsite Tests															
			SD-06 Test Reports															
			Field Test Plan															
			GA															
			Field Test Reports	3.22														
			SD-07 Certificates															
			Materials and Equipment	1.4														
			GA															
		16510	SD-03 Product Data															
			Fluorescent lighting fixtures	2.1														
			GA															
			Fluorescent electronic ballasts	1.5.1														
			Fluorescent lamps	2.1.2														
			High-intensity-discharge (HID)	2.2														
			lighting fixtures															
			HID ballasts	2.2.1														
			High-pressure sodium (HPS)	2.2.2														
			lamps															
			Lighting contactor	2.5														
			Time switch															
			Photocell switch															
			Power hook fixture hangers															
			Exit signs	2.6														
			Emergency lighting equipment	2.7														

SUBMITTAL REGISTER

CONTRACT NO.
DACW33-94-D-0002

TITLE AND LOCATION
New Bedford Harbor Water Treatment Plant

CONTRACTOR

ACTIVITY NO	TRANSMITTAL NO	SPEC SECT	DESCRIPTION ITEM SUBMITTED	PARAG # RAPH	CLASSIFICATION	GOVT OR A/E REVWR	CONTRACTOR: SCHEDULE DATES			CONTRACTOR ACTION			APPROVING AUTHORITY					
							SUBMIT	APPROVAL NEEDED BY	MATERIAL NEEDED BY	ACTION CODE	DATE OF ACTION	DATE FWD TO APPR AUTH/ DATE RCD FROM CONTR	DATE FWD TO OTHER REVIEWER	DATE RCD FROM OTH REVIEWER	ACTION CODE	DATE OF ACTION	MAILED TO CONTR/ DATE RCD FRM APPR AUTH	REMARKS
(a)	(b)	(c)	(d)	(e)	(f)		(g)	(h)	(i)	(j)	(k)	(l)	(m)	(n)	(o)	(p)	(q)	(r)
		16510	SD-04 Samples															
			Lighting fixtures															
			GA															
			SD-06 Test Reports															
			Operating test	3.2														
			GA															
			SD-11 Closeout Submittals															
			Information card															
			GA															