RETURN TO 1998 ROD AR INDEX

4.2.2

SDMS DocID 000201856

EPA WORK ASSIGNMENT NUMBER: 04-1L43
EPA CONTRACT NUMBER: 68-01-7250
EBASCO SERVICES, INCORPORATED

DRAFT AIR MONITORING REPORT
VOLUME II

NEW BEDFORD HARBOR PILOT DREDGING AND DISPOSAL STUDY

NEW BEDFORD HARBOR FS TASK 26

JUNE 1990

Prepared by:

Mark Hanson
Senior Scientist
Ebasco Services, Incorporated

Reviewed by:

Laurence Labrie
Consulting Meteorologist
Ebasco Services, Incorporated

Approved by:

Alan Fowler
Project Lead
Ebasco Services, Incorporated

NEW BEDFORD HARBOR
PILOT DREDGING AND DISPOSAL STUDY
AIR MONITORING PROGRAM

TABLE OF CONTENTS

VOLUME II

APPENDIX E	Site Photographs
APPENDIX F	Sampler Calibrations
APPENDIX G	Daily Wind Rose/Frequency Distribution

APPENDIX E

SITE PHOTOGRAPHS

FIGURE E-1

SOUTHWEST STATION

FIGURE E-1 (cont'd)

SOUTHWEST STATION LOOKING EAST

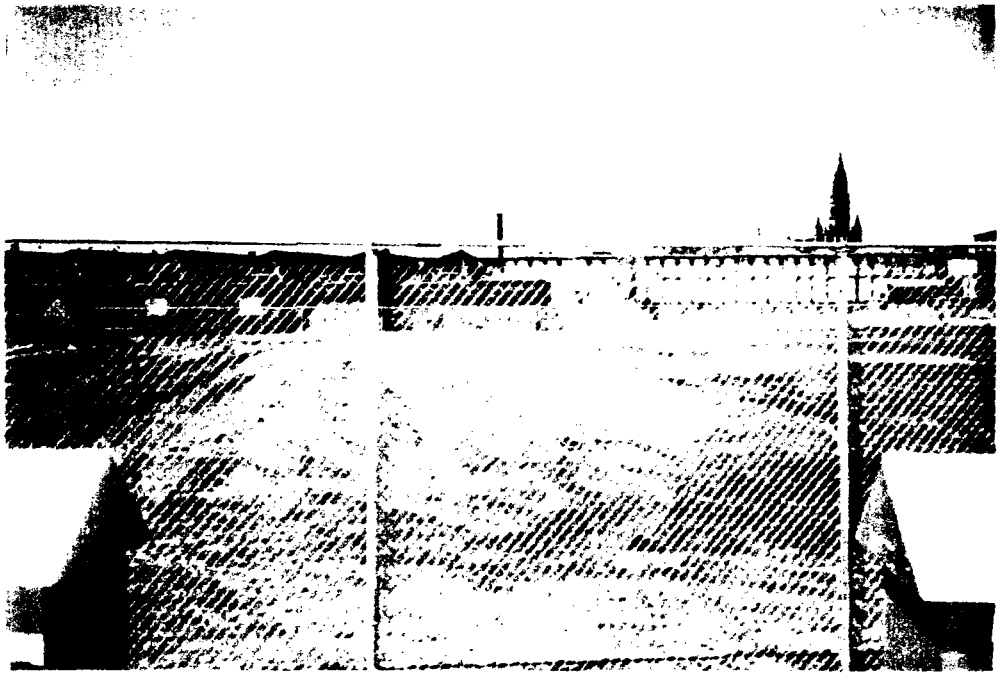

SOUTHWEST STATION LOOKING WEST

FIGURE E-1 (cont'd)

SOUTHWEST STATION LOOKING NORTH

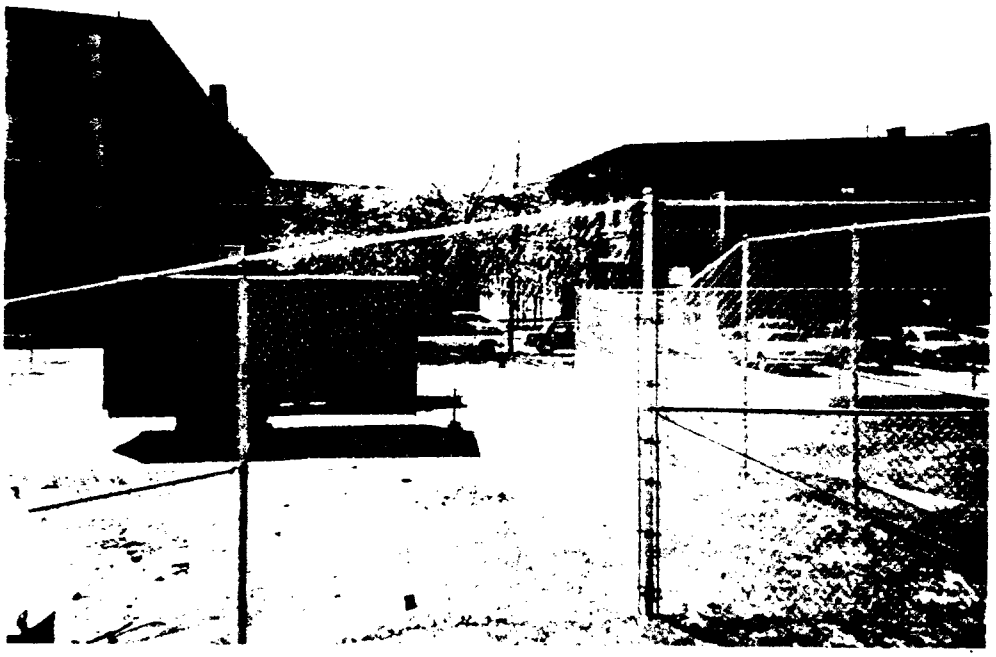

SOUTHWEST STATION LOOKING SOUTH

FIGURE E-2

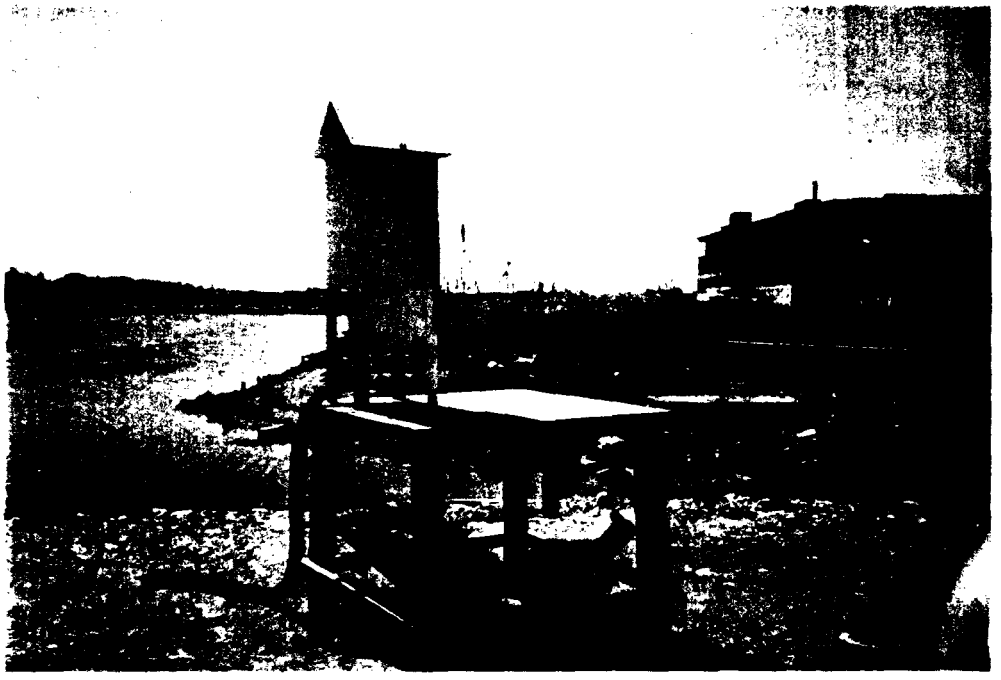

SOUTHEAST STATION

FIGURE E-2 (cont'd)

SOUTHEAST STATION LOOKING EAST

SOUTHEAST STATION LOOKING WEST

FIGURE E-2 (cont'd)

SOUTHEAST STATION LOOKING NORTH

SOUTHEAST STATION LOOKING SOUTH

FIGURE E-3

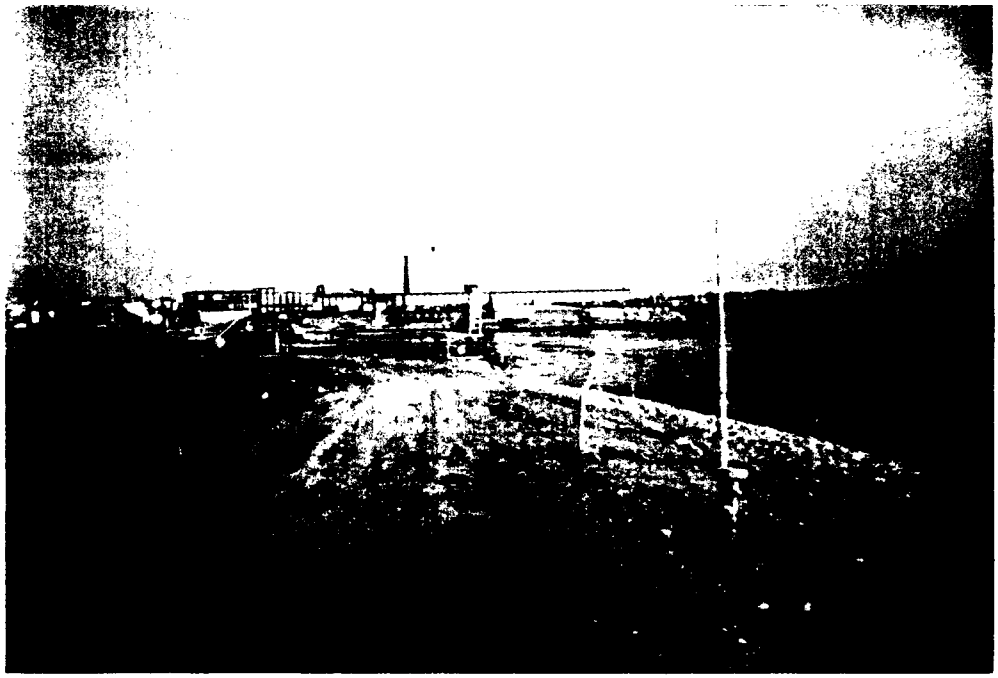

NORTHEAST STATION

FIGURE E-3 (cont'd)

NORTHEAST STATION LOOKING NORTH

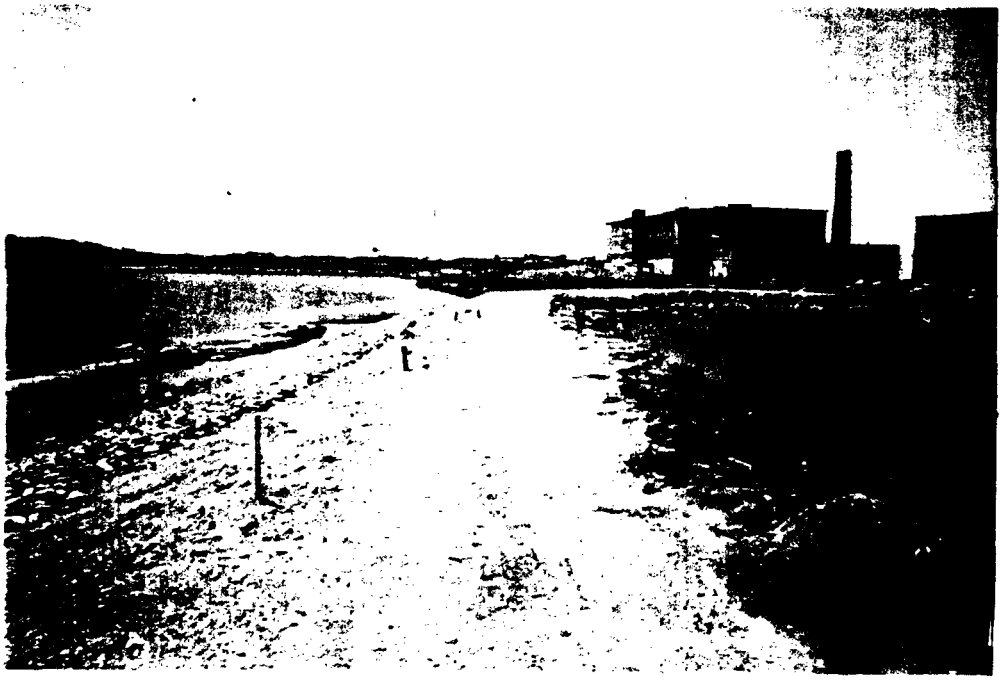

NORTHEAST STATION LOOKING SOUTH

FIGURE E-4

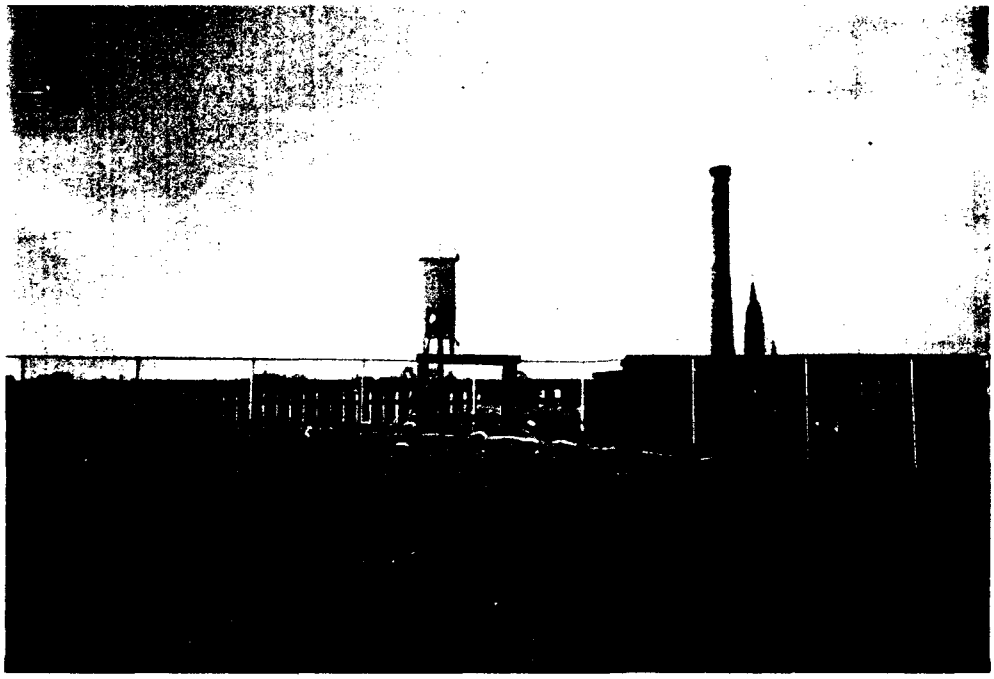

NORTHWEST STATION

FIGURE E-4 (cont'd)

NORTHWEST STATION LOOKING NORTH

NORTHWEST STATION LOOKING SOUTH

FIGURE E-4 (cont'd)

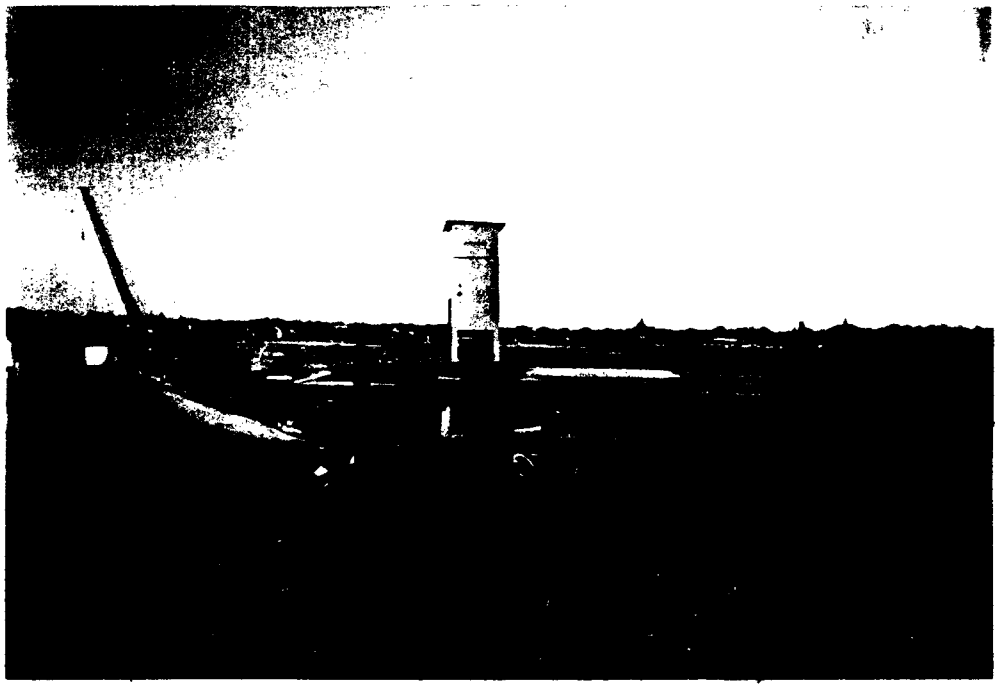

NORTHWEST STATION LOOKING EAST

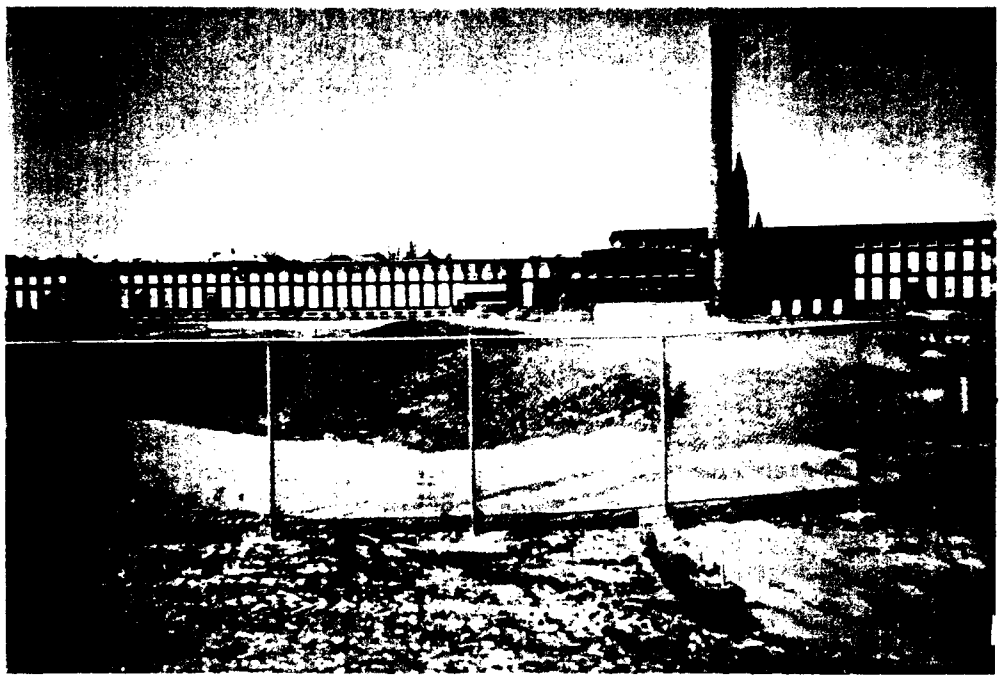

NORTHWEST STATION LOOKING WEST

FIGURE E-5

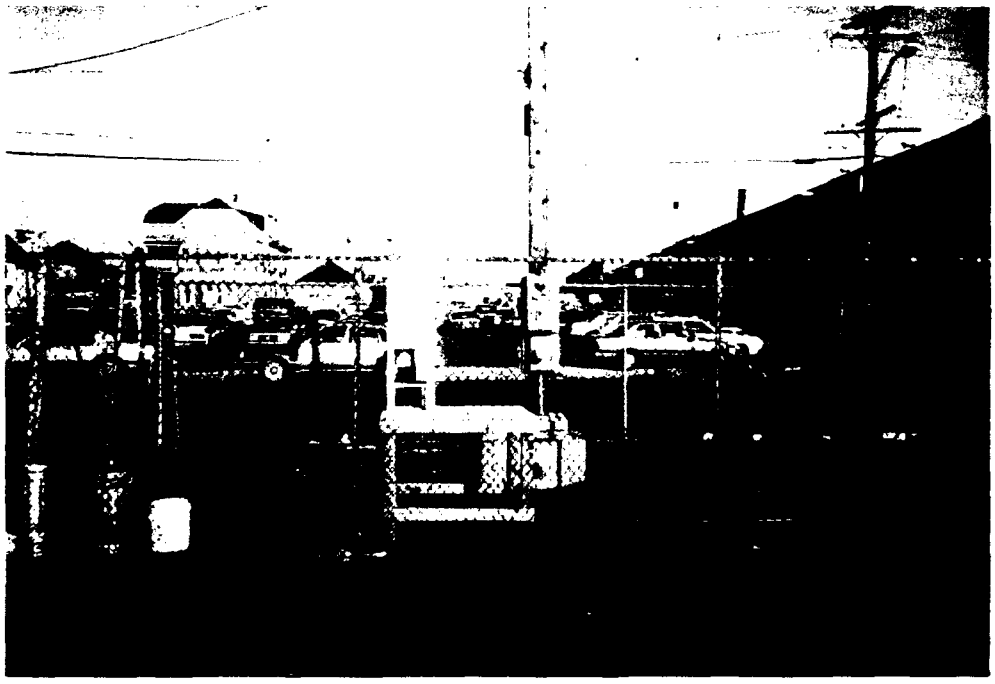

BACKGROUND STATION

FIGURE E-5 (cont'd)

BACKROUND STATION LOOKING NORTH

BACKROUND STATION LOOKING SOUTH

FIGURE E-6

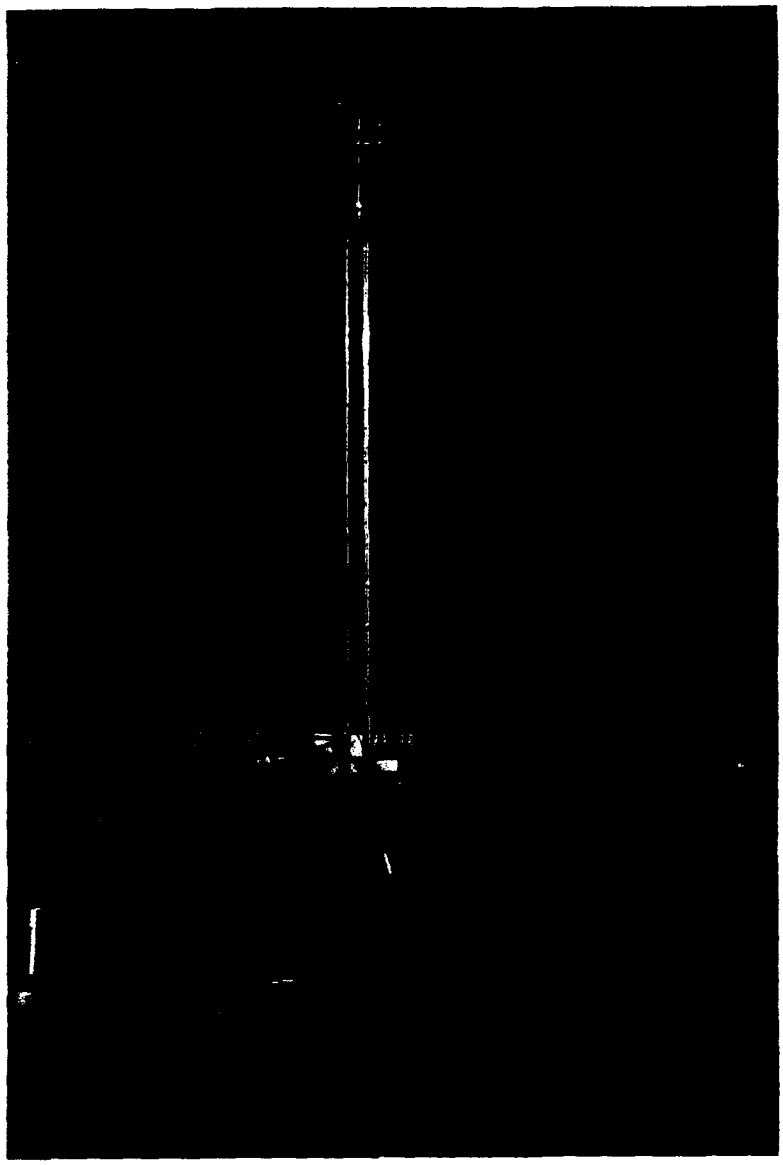

10 METER METEOROLOGICAL TOWER

APPENDIX F

SAMPLER CALIBRATIONS

POLYURETHANE FOAM (PUF) SAMPLERS

TABLE F-1

Polyurethane Foam (PUF) Sampler Calibration Summary

Site	Date	Calibration Slope	Calibration Intercept	Meter Set Point	Set Point Flow Rate	% Drift from Last Calibration
SOUTHWEST (Primary)	10/14/88	507.77	-77.998	44	0.240	--
	11/30/88	366.29	-42.849	45	0.240	2.72%
	1/13/89	283.75	-20.813	47	0.240	4.94%
	1/27/89	342.91	-38.984	43	0.240	-8.40%
	3/31/89	479.91	-71.272	44	0.240	-0.50%
	4/27/89	470.72	-67.616	45	0.240	3.31%
SOUTHWEST (Collocated)	10/14/88	364.61	-43.504	44	0.240	--
	11/30/88	366.29	-42.849	45	0.240	2.41%
	1/13/89	358.01	-40.349	46	0.240	1.14%
	1/27/89	358.39	-42.727	43	0.240	-5.02%
	3/31/89	443.79	-59.646	47	0.240	8.30%
	4/27/89	450.68	-60.741	47	0.240	1.19%
SOUTHEAST	10/14/88	342.32	-36.063	46	0.240	--
	11/30/88	348.07	-36.134	47	0.240	2.84%
	1/13/89	329.09	-29.048	50	0.240	5.34%
	1/27/89	307.99	-27.181	47	0.240	-6.40%
	3/31/89	447.33	-61.532	46	0.240	-1.90%
	4/27/89	468.91	-66.909	46	0.240	-0.64%
NORTHEAST	10/14/88	369.66	-42.881	46	0.240	--
	11/30/88	352.08	-39.272	45	0.240	-1.33%
	1/13/89	353.85	-37.148	48	0.240	5.63%
	1/27/89	340.36	-36.437	45	0.240	-5.28%
	3/31/89	480.30	-66.962	48	0.240	1.12%
	4/27/89	409.09	-51.497	47	0.240	-3.36%
NORTHWEST	10/14/88	381.59	-43.538	48	0.240	--
	11/30/88	348.55	-36.998	47	0.240	-2.89%
	1/13/89	367.53	-41.796	46	0.240	-0.52%
	1/27/89	341.58	-37.768	44	0.240	-4.74%
	3/31/89	488.59	-69.251	48	0.240	8.59%
	4/27/89	430.59	-53.905	49	0.240	2.97%
BACKGROUND	10/14/88	371.26	-41.862	47	0.240	--
	12/27/89	362.25	-40.971	46	0.240	-2.69%
	1/27/89	352.77	-40.046	45	0.240	-2.94%
	3/31/89	449.75	-57.553	50	0.240	12.93%*
	4/27/89	403.09	-45.908	51	0.240	0.88%

* Calibration/maintenance completed.

POLYURETHANE FOAM SAMPLER CALIBRATION SHEET

Form#: A101
Date: 10/1/88
Revision: 0

ENVIROSPHERE COMPANY
A DIVISION OF EBASCO SERVICES INCORPORATED
211 CONGRESS STREET
BOSTON, MASSACHUSETTES 02199

PROJECT: NEW BEDFORD HARBOR
SITE: SOUTHWEST (SWP-1)
DATE/TIME: 10/14/88
TECHNICIAN: HANSON

CALIB.UNIT NO.: 86C
CERTIFICATION DATE: 7/20/88
UNIT CALIBRATION CURVE:
M: 9.9599
b: -0.0804

PUF SAMPLER NO.: 6933
FLOW MEAS. DEVICE NO.: 94
MOTOR NO.: 0988-0470
FLOW CONTROLLER NO.: --
TIMER NO.: 0888-1291
ETI NO: 0988-1023

DATE OF LAST CALIB.: 10/14/88
DATE OF INT.CALIB.: 10/14/88

BAR. PRESS.(INCHES HG): 30.24
BAR. PRESS.(MM/HG): 768.10
TEMPERATURE (F): 50.0
TEMPERATURE (C): 10.0
TEMPERATURE (K): 283.16
STP CORRECTION FACTOR: 1.0642

ETI READING: 66.6

TEST POINT	AMB. TEMP. (K)	AMB. PRESS. (MM)	REFERENCE MANOMETER OR MAGNEHELIC (Y) INCHES OF WATER (OBS.)	INCHES OF WATER (STD.)	REFERENCE FLOW RATE (M3)	SAMPLER MAGNAHELIC (X) INCHES OF WATER (RESP.)	FLOW RATE BASED ON CAL. (M3)	ACCURACY OF CURVE PTS. (%)
1	283.16	768.09	6.40	2.610	0.270	60.0	0.272	0.62%
2	283.16	768.09	5.70	2.463	0.255	50.0	0.252	-1.28%
3	283.16	768.09	4.65	2.225	0.231	40.0	0.232	0.42%
4	283.16	768.09	3.60	1.957	0.205	30.0	0.213	3.95%
5	283.16	768.09	3.45	1.916	0.200	20.0	0.193	-3.70%
CLEAN FILTER	283.16	768.09	#####	#####	#####	43.9	0.240	0.00%

CURRENT STANDARD FLOW CURVE = 10/14/88 (RESP - b)/M
b = -77.998
M = 507.770
MAGNEHELIC SET POINT = 43.9

LAST CALIBRATION FLOW CURVE = 10/14/88
b = -77.998
M = 507.770
MAGNEHELIC SET POINT = 43.9

DIFFERENCE BETWEEN FLOW CURVES = 0.00%

MAINTENANCE RECORD
(COMPLETE DURING EVERY CALIBRATION)

CONDITION OF MOTOR: NEW

CONDITION OF MOTOR BRUSHES: NEW
#HOURS OF USE(CHANGE AFTER 900HRS): 0

CONDITON OF MOTOR GASKET: NEW

MAGNEHELIC ZERO AS FOUND: 0.0
AFTER ADJUSTMENT: 0.0

CONDITION OF FILTER GASKETS (2): NEW
#HOURS OF USE(CHANGE WHEN WORN): 0

CONDITION OF BALL VALVE: GOOD

LEAK CHECK PRIOR TO CALIBRATION: GOOD
LEAK CHECK PRIOR TO CALIBRATION: GOOD

SAMPLING WELL CLEANED: YES

NOTES ON THE PERFORMANCE AND CONDITON OF THE SAMPLER:

POLYURETHANE FOAM SAMPLER CALIBRATION SHEET

Form#: A101
Date: 10/1/88
Revision: 0

ENVIROSPHERE COMPANY
A DIVISION OF EBASCO SERVICES INCORPORATED
211 CONGRESS STREET
BOSTON, MASSACHUSETTES 02199

PROJECT: NEW BEDFORD HARBOR
SITE: SOUTHWEST (SWP-1)
DATE/TIME: 11/30/88
TECHNICIAN: HANSON

CALIB.UNIT NO.: 86C
CERTIFICATION DATE: 7/20/88
UNIT CALIBRATION CURVE:
M: 9.9599
b: -0.0804

PUF SAMPLER NO.: 6533
FLOW MEAS. DEVICE NO.: 94
MOTOR NO.: 0988-0470
FLOW CONTROLLER NO.: --
TIMER NO.: 0888-1291
ETI NO: 0988-1023

DATE OF LAST CALIB.: 11/30/88
DATE OF INT.CALIB.: 10/14/88

BAR. PRESS.(INCHES HG): 30.16
BAR. PRESS.(MM/HG): 766.07
TEMPERATURE (F): 43.0
TEMPERATURE (C): 6.1
TEMPERATURE (K): 279.27
STP CORRECTION FACTOR: 1.0762

ETI READING: 31475

TEST POINT	AMB. TEMP. (K)	AMB. PRESS. (MM)	REFERENCE MANOMETER OR MAGNEHELIC (Y) INCHES OF WATER (OBS.)	INCHES OF WATER (STD.)	REFERENCE FLOW RATE (M3)	SAMPLER MAGNAHELIC (X) INCHES OF WATER (RESP.)	FLOW RATE BASED ON CAL. (M3)	ACCURACY OF CURVE PTS. (%)
1	279.27	766.06	6.55	2.655	0.275	60.0	0.281	2.24%
2	279.27	766.06	5.55	2.444	0.253	50.0	0.252	0.02%
3	279.27	766.06	4.70	2.249	0.234	40.0	0.226	-3.29%
4	279.27	766.06	3.50	1.941	0.203	30.0	0.199	-1.99%
5	279.27	766.06	2.30	1.573	0.166	20.0	0.172	3.34%
CLEAN FILTER	279.27	766.06	*****	*****	*****	45.1	0.240	0.06%

CURRENT STANDARD FLOW CURVE = (RESP - b)/M
11/30/88
b = -42.849
M = 366.290
MAGNEHELIC SET POINT = 45.1

LAST CALIBRATION FLOW CURVE = b = -77.998
11/30/88 M = 507.770
MAGNEHELIC SET POINT = 43.9

DIFFERENCE BETWEEN FLOW CURVES = 2.72%

MAINTENANCE RECORD
(COMPLETE DURING EVERY CALIBRATION)

CONDITION OF MOTOR: GOOD

CONDITION OF MOTOR BRUSHES: CHANGED
#HOURS OF USE(CHANGE AFTER 900HRS): 500

CONDITON OF MOTOR GASKET: GOOD

MAGNEHELIC ZERO AS FOUND: 0.0
AFTER ADJUSTMENT: 0.0

CONDITION OF FILTER GASKETS (2): GOOD
#HOURS OF USE(CHANGE WHEN WORN): 500

CONDITION OF BALL VALVE: GOOD

LEAK CHECK PRIOR TO CALIBRATION: GOOD
LEAK CHECK PRIOR TO CALIBRATION: GOOD

SAMPLING WELL CLEANED: YES

NOTES ON THE PERFORMANCE AND CONDITON OF THE SAMPLER:

FOLYURETHANE FOAM SAMPLER CALIBRATION SHEET

Form#: A101
Date: 10/1/88
Revision: 0

ENVIROSPHERE COMPANY
A DIVISION OF EBASCO SERVICES INCORPORATED
211 CONGRESS STREET
BOSTON, MASSACHUSETTES 02199

PROJECT: NEW BEDFORD HARBOR
SITE: SOUTHWEST (SWP-1)
DATE/TIME: 1/13/89
TECHNICIAN: HANSON

CALIB.UNIT NO.: 86C
CERTIFICATION DATE: 7/20/88
UNIT CALIBRATION CURVE:
M: 9.9599
b: -0.0804

PUF SAMPLER NO.: 6933
FLOW MEAS. DEVICE NO.: 94
MOTOR NO.: 0988-0470
FLOW CONTROLLER NO.: --
TIMER NO.: 0888-1291
ETI NO: 0986-1023

TEST POINT	AMB. TEMP. (K)	AMB. PRESS. (MM)	REFERENCE MANOMETER OR MAGNEHELIC (Y) INCHES OF WATER (OBS.)	REFERENCE MANOMETER OR MAGNEHELIC (Y) INCHES OF WATER (STD.)	REFERENCE MANOMETER OR MAGNEHELIC (Y) REFERENCE FLOW RATE (M3)	SAMPLER MAGNAHELIC (X) INCHES OF WATER (RESP.)	SAMPLER MAGNAHELIC (X) FLOW RATE BASED ON CAL. (M3)	ACCURACY OF CURVE PTS. (%)
1	275.16	757.42	6.20	2.588	0.268	60.0	0.285	6.32%
2	275.16	757.42	5.40	2.415	0.251	50.0	0.250	-0.39%
3	275.16	757.42	4.40	2.180	0.227	40.0	0.214	-5.56%
4	275.16	757.42	3.20	1.859	0.195	30.0	0.179	-8.03%
5	275.16	757.42	1.40	1.230	0.132	20.0	0.144	9.76%
CLEAN FILTER	275.16	757.42	*****	*****	*****	47.3	0.240	0.34%

DATE OF LAST CALIB.: 11/30/88
DATE OF INT.CALIB.: 10/14/88

CURRENT STANDARD FLOW CURVE = 1/13/89
(RESP - b)/M
b = -20.813
M = 283.752
MAGNEHELIC SET POINT = 47.3

LAST CALIBRATION FLOW CURVE = 11/30/88
b = -42.849
M = 366.290
MAGNEHELIC SET POINT = 45.1

DIFFERENCE BETWEEN FLOW CURVES = 4.94%

BAR. PRESS.(INCHES HG): 29.82
BAR. PRESS.(MM/HG): 757.43
TEMPERATURE (F): 35.6
TEMPERATURE (C): 2.0
TEMPERATURE (K): 275.16
STP CORRECTION FACTOR: 1.0799

ETI READING: 64496.3

MAINTENANCE RECORD
(COMPLETE DURING EVERY CALIBRATION)

CONDITION OF MOTOR: GOOD

CONDITION OF MOTOR BRUSHES: GOOD
#HOURS OF USE(CHANGE AFTER 900HRS): 392

CONDITON OF MOTOR GASKET: GOOD

MAGNEHELIC ZERO AS FOUND: 0.0
AFTER ADJUSTMENT: 0.0

CONDITION OF FILTER BASKETS (2): GOOD
#HOURS OF USE(CHANGE WHEN WORN): 1039

CONDITION OF BALL VALVE: GOOD

LEAK CHECK PRIOR TO CALIBRATION: GOOD
LEAK CHECK PRIOR TO CALIBRATION: GOOD

SAMPLING WELL CLEANED: YES

NOTES ON THE PERFORMANCE AND CONDITON OF THE SAMPLER:

POLYURETHANE FOAM SAMPLER CALIBRATION SHEET

Form#: A101
Date: 10/1/88
Revision: 0

ENVIROSPHERE COMPANY
A DIVISION OF EBASCO SERVICES INCORPORATED
211 CONGRESS STREET
BOSTON, MASSACHUSETTES 02199

PROJECT: NEW BEDFORD HARBOR
SITE: SOUTHWEST (SWP-1)
DATE/TIME: 1/27/89
TECHNICIAN: HANSON

CALIB.UNIT NO.: 86C
CERTIFICATION DATE: 7/20/88
UNIT CALIBRATION CURVE:
M: 9.9599
b: -0.0804

PUF SAMPLER NO.: 6933
FLOW MEAS. DEVICE NO.: 94
MOTOR NO.: 0988-0470
FLOW CONTROLLER NO.: --
TIMER NO.: 0883-1291
ETI NO: 0988-1023

DATE OF LAST CALIB.: 1/13/89
DATE OF INT.CALIB.: 10/14/88

BAR. PRESS.(INCHES HG): 29.92
BAR. PRESS.(MM/HG): 759.97
TEMPERATURE (F): 22.5
TEMPERATURE (C): -5.3
TEMPERATURE (K): 267.88
STP CORRECTION FACTOR: 1.1130

ETI READING: --

TEST POINT	AMB. TEMP. (K)	AMB. PRESS. (MM)	REFERENCE MANOMETER OR MAGNEHELIC (Y) INCHES OF WATER (OBS.)	REFERENCE INCHES OF WATER (STD.)	REFERENCE FLOW RATE (M3)	SAMPLER MAGNAHELIC (X) INCHES OF WATER (RESP.)	FLOW RATE BASED ON CAL. (M3)	ACCURACY OF CURVE PTS. (%)
1	267.88	759.96	6.55	2.700	0.279	60.0	0.289	3.40%
2	267.88	759.96	5.70	2.519	0.261	50.0	0.259	-0.56%
3	267.88	759.96	4.80	2.311	0.240	40.0	0.230	-4.03%
4	267.88	759.96	3.50	1.974	0.206	30.0	0.201	-2.46%
5	267.88	759.96	2.20	1.565	0.165	20.0	0.172	4.13%
CLEAN FILTER	267.88	759.96	*****	*****	*****	43.3	0.240	0.95%

CURRENT STANDARD FLOW CURVE = (RESP - b)/M
1/27/89
b = -38.984
M = 342.909
MAGNEHELIC SET POINT = 43.3

LAST CALIBRATION FLOW CURVE = b = -20.813
1/13/89
M = 283.752
MAGNEHELIC SET POINT = 47.3

DIFFERENCE BETWEEN FLOW CURVES = -8.40%

MAINTENANCE RECORD
(COMPLETE DURING EVERY CALIBRATION)

CONDITION OF MOTOR: GOOD

CONDITION OF MOTOR BRUSHES: GOOD
#HOURS OF USE(CHANGE AFTER 900HRS): 512

CONDITON OF MOTOR GASKET: GOOD

MAGNEHELIC ZERO AS FOUND: 0.0
AFTER ADJUSTMENT: 0.0

CONDITION OF FILTER GASKETS (2): GOOD
#HOURS OF USE(CHANGE WHEN WORN): 1551

CONDITION OF BALL VALVE: GOOD

LEAK CHECK PRIOR TO CALIBRATION: GOOD
LEAK CHECK PRIOR TO CALIBRATION: GOOD

SAMPLING WELL CLEANED: YES

NOTES ON THE PERFORMANCE AND CONDITON OF THE SAMPLER:

POLYURETHANE FOAM SAMPLER CALIBRATION SHEET

Form#: A101
Date: 10/1/88
Revision: 0

ENVIROSPHERE COMPANY
A DIVISION OF EBASCO SERVICES INCORPORATED
211 CONGRESS STREET
BOSTON, MASSACHUSETTES 02199

PROJECT: NEW BEDFORD HARBOR
SITE: SOUTHWEST (SWP-1)
DATE/TIME: 3/31/89
TECHNICIAN: HANSON

CALIB.UNIT NO.: 86C
CERTIFICATION DATE: 7/20/88
UNIT CALIBRATION CURVE:
M: 9.9599
b: -0.0804

PUF SAMPLER NO.: 6933
FLOW MEAS. DEVICE NO.: 94
MOTOR NO.: 0988-0470
FLOW CONTROLLER NO.: --
TIMER NO.: 0888-1291
ETI NO: 0988-1023

DATE OF LAST CALIB.: 1/27/89
DATE OF INT.CALIB.: 10/14/88

BAR. PRESS.(INCHES HG): 29.69
BAR. PRESS.(MM/HG): 754.13
TEMPERATURE (F): 40.0
TEMPERATURE (C): 4.4
TEMPERATURE (K): 277.60
STP CORRECTION FACTOR: 1.0657

ETI READING: 68772

TEST POINT	AMB. TEMP. (K)	AMB. PRESS. (MM)	REFERENCE MANOMETER OR MAGNEHELIC (Y) INCHES OF WATER (OBS.)	INCHES OF WATER (STD.)	REFERENCE FLOW RATE (M3)	SAMPLER MAGNAHELIC (X) INCHES OF WATER (RESP.)	FLOW RATE BASED ON CAL. (M3)	ACCURACY OF CURVE PTS. (%)
1	277.60	754.12	7.45	2.818	0.291	70.0	0.294	1.16%
2	277.60	754.12	6.60	2.652	0.274	60.0	0.274	-0.30%
3	277.60	754.12	5.70	2.465	0.256	50.0	0.253	-1.11%
4	277.60	754.12	4.80	2.262	0.235	40.0	0.232	-1.40%
5	277.60	754.12	3.70	1.986	0.207	30.0	0.211	1.72%
CLEAN FILTER	277.60	754.12	#####	#####	#####	43.9	0.240	0.01%

CURRENT STANDARD FLOW CURVE = 3/31/89 (RESP - b)/M
b = -71.272
M = 479.911
MAGNEHELIC SET POINT = 43.9

LAST CALIBRATION FLOW CURVE = 1/27/89
b = -71.280
M = 480.871
MAGNEHELIC SET POINT = 44.1

DIFFERENCE BETWEEN FLOW CURVES = -0.50%

MAINTENANCE RECORD
(COMPLETE DURING EVERY CALIBRATION)

CONDITION OF MOTOR: GOOD

CONDITION OF MOTOR BRUSHES: CHANGED
#HOURS OF USE(CHANGE AFTER 900HRS): 512

CONDITON OF MOTOR GASKET: GOOD

MAGNEHELIC ZERO AS FOUND: 0.0
AFTER ADJUSTMENT: 0.0

CONDITION OF FILTER GASKETS (2): GOOD
#HOURS OF USE(CHANGE WHEN WORN): 1551

CONDITION OF BALL VALVE: GOOD

LEAK CHECK PRIOR TO CALIBRATION: GOOD
LEAK CHECK PRIOR TO CALIBRATION: GOOD

SAMPLING WELL CLEANED: YES

NOTES ON THE PERFORMANCE AND CONDITON OF THE SAMPLER:

POLYURETHANE FOAM SAMPLER CALIBRATION SHEET

Form#: A101
Date: 10/1/89
Revision: 0

ENVIROSPHERE COMPANY
A DIVISION OF EBASCO SERVICES INCORPORATED
211 CONGRESS STREET
BOSTON, MASSACHUSETTES 02199

PROJECT: NEW BEDFORD HARBOR
SITE: SOUTHWEST (SWP-1)
DATE/TIME: 4/27/89
TECHNICIAN: HANSON

CALIB.UNIT NO.: 86C
CERTIFICATION DATE: 7/20/88
UNIT CALIBRATION CURVE:
M: 9.9599
b: -0.0604

PUF SAMPLER NO.: 6933
FLOW MEAS. DEVICE NO.: 94
MOTOR NO.: 0996-0470
FLOW CONTROLLER NO.: --
TIMER NO.: 0888-1291
ETI NO: 0988-1023

TEST POINT	AMB. TEMP. (K)	AMB. PRESS. (MM)	REFERENCE MANOMETER OR MAGNEHELIC INCHES OF WATER (OBS.) (Y)	REFERENCE MANOMETER OR MAGNEHELIC INCHES OF WATER (STD.)	REFERENCE FLOW RATE (M3)	SAMPLER MAGNAHELIC INCHES OF WATER (RESP.) (X)	FLOW RATE BASED ON CAL. (M3)	ACCURACY OF CURVE PTS. (%)
1	282.60	757.42	7.50	2.808	0.290	70.0	0.292	0.80%
2	282.60	757.42	6.50	2.614	0.271	60.0	0.271	0.20%
3	282.60	757.42	5.70	2.448	0.254	50.0	0.250	-1.38%
4	282.60	757.42	4.65	2.211	0.230	40.0	0.229	-0.64%
5	282.60	757.42	3.65	1.959	0.205	30.0	0.207	1.27%
CLEAN FILTER	282.60	757.42	*****	*****	*****	45.4	0.240	0.01%

DATE OF LAST CALIB.: 3/31/89
DATE OF INT.CALIB.: 10/14/88

CURRENT STANDARD FLOW CURVE = 4/27/89
(RESP - b)/M
b = -67.616
M = 470.728
MAGNEHELIC SET POINT = 45.4

LAST CALIBRATION FLOW CURVE = 3/31/89
b = -71.272
M = 479.911
MAGNEHELIC SET POINT = 43.9

DIFFERENCE BETWEEN FLOW CURVES = 3.31%

BAR. PRESS.(INCHES HG): 29.82
BAR. PRESS.(MM/HG): 757.43
TEMPERATURE (F): 49.0
TEMPERATURE (C): 9.4
TEMPERATURE (K): 282.60
STP CORRECTION FACTOR: 1.0515

ETI READING: 91358

MAINTENANCE RECORD
(COMPLETE DURING EVERY CALIBRATION)

CONDITION OF MOTOR: GOOD

CONDITION OF MOTOR BRUSHES: GOOD
#HOURS OF USE(CHANGE AFTER 900HRS): 368

CONDITON OF MOTOR GASKET: GOOD

MAGNEHELIC ZERO AS FOUND: 0.0
AFTER ADJUSTMENT: 0.0

CONDITION OF FILTER GASKETS (2): GOOD
#HOURS OF USE(CHANGE WHEN WORN): 1919

CONDITION OF BALL VALVE: GOOD

LEAK CHECK PRIOR TO CALIBRATION: GOOD
LEAK CHECK PRIOR TO CALIBRATION: GOOD

SAMPLING WELL CLEANED: YES

NOTES ON THE PERFORMANCE AND CONDITON OF THE SAMPLER:

POLYURETHANE FOAM SAMPLER CALIBRATION SHEET

Form#: A101
Date: 10/1/89
Revision: 0

ENVIROSPHERE COMPANY
A DIVISION OF EBASCO SERVICES INCORPORATED
211 CONGRESS STREET
BOSTON, MASSACHUSETTES 02199

PROJECT: NEW BEDFORD HARBOR
SITE: SOUTHWEST (SWP-C)
DATE/TIME: 10/14/88
TECHNICIAN: HANSON

CALIB.UNIT NO.: 86C
CERTIFICATION DATE: 7/20/88
UNIT CALIBRATION CURVE:
M: 9.9599
b: -0.0804

PUF SAMPLER NO.: 6931
FLOW MEAS. DEVICE NO.: 92
MOTOR NO.: 0988-0478
FLOW CONTROLLER NO.: --
TIMER NO.: 0889-1327
ETI NO: 0988-1039

DATE OF LAST CALIB.: 10/14/88
DATE OF INT.CALIB.: 10/14/88

BAR. PRESS.(INCHES HG): 30.24
BAR. PRESS.(MM/HG): 768.10
TEMPERATURE (F): 50.0
TEMPERATURE (C): 10.0
TEMPERATURE (K): 283.16
STP CORRECTION FACTOR: 1.0642

ETI READING: 66.8

TEST POINT	AMB. TEMP. (K)	AMB. PRESS. (MM)	REFERENCE MANOMETER OR MAGNEHELIC INCHES OF WATER (OBS.) (Y)	INCHES OF WATER (STD.)	REFERENCE FLOW RATE (M3)	SAMPLER MAGNAHELIC INCHES OF WATER (RESP.) (X)	FLOW RATE BASED ON CAL. (M3)	ACCURACY OF CURVE PTS. (%)
1	283.16	768.09	6.85	2.700	0.279	60.0	0.284	1.69%
2	283.16	768.09	5.85	2.495	0.259	50.0	0.256	-0.82%
3	283.16	768.09	4.70	2.236	0.233	40.0	0.229	-1.54%
4	283.16	768.09	3.60	1.957	0.205	30.0	0.202	-1.46%
5	283.16	768.09	2.45	1.615	0.170	20.0	0.174	2.34%
CLEAN FILTER	283.16	768.09	#####	#####	#####	44.0	0.240	0.04%

CURRENT STANDARD FLOW CURVE = (RESP - b)/M MAGNEHELIC
10/14/88 b = -43.504 SET POINT = 44.0
M = 364.602

LAST CALIBRATION FLOW CURVE = b = -43.504 MAGNEHELIC
10/14/88 M = 364.602 SET POINT = 44.0

DIFFERENCE BETWEEN FLOW CURVES = 0.00%

MAINTENANCE RECORD
(COMPLETE DURING EVERY CALIBRATION)

CONDITION OF MOTOR: NEW

CONDITION OF MOTOR BRUSHES: NEW
#HOURS OF USE(CHANGE AFTER 900HRS): 0

CONDITON OF MOTOR GASKET: NEW

MAGNEHELIC ZERO AS FOUND: 0.0
AFTER ADJUSTMENT: 0.0

CONDITION OF FILTER GASKETS (2): NEW
#HOURS OF USE(CHANGE WHEN WORN): 0

CONDITION OF BALL VALVE: GOOD

LEAK CHECK PRIOR TO CALIBRATION: GOOD
LEAK CHECK PRIOR TO CALIBRATION: GOOD

SAMPLING WELL CLEANED: YES

NOTES ON THE PERFORMANCE AND CONDITON OF THE SAMPLER:

POLYURETHANE FOAM SAMPLER CALIBRATION SHEET

Form#: A101
Date: 10/1/88
Revision: 0

ENVIROSPHERE COMPANY
A DIVISION OF EBASCO SERVICES INCORPORATED
211 CONGRESS STREET
BOSTON, MASSACHUSETTES 02199

PROJECT: NEW BEDFORD HARBOR
SITE: SOUTHWEST (SWP-C)
DATE/TIME: 11/30/88
TECHNICIAN: HANSON

CALIB.UNIT NO.: 86C
CERTIFICATION DATE: 7/20/88
UNIT CALIBRATION CURVE:
M: 9.9599
b: -0.0804

PUF SAMPLER NO.: 6931
FLOW MEAS. DEVICE NO.: 92
MOTOR NO.: 0988-0478
FLOW CONTROLLER NO.: --
TIMER NO.: 0888-1327
ETI NO: 0988-1039

DATE OF LAST CALIB.: 10/14/88
DATE OF INT.CALIB.: 10/14/88

BAR. PRESS.(INCHES HG): 30.16
BAR. PRESS.(MM/HG): 766.07
TEMPERATURE (F): 43.0
TEMPERATURE (C): 6.1
TEMPERATURE (K): 279.27
STP CORRECTION FACTOR: 1.0762

TEST POINT	AMB. TEMP. (K)	AMB. PRESS. (MM)	REFERENCE MANOMETER OR MAGNEHELIC Y: INCHES OF WATER (OBS.)	INCHES OF WATER (STD.)	REFERENCE FLOW RATE (M3)	SAMPLER MAGNAHELIC X: INCHES OF WATER (RESP.)	FLOW RATE BASED ON CAL. (M3)	ACCURACY OF CURVE PTS. (%)
1	279.27	766.06	6.55	2.655	0.275	60.0	0.281	2.24%
2	279.27	766.06	5.55	2.444	0.253	50.0	0.253	0.02%
3	279.27	766.06	4.70	2.249	0.234	40.0	0.226	-3.29%
4	279.27	766.06	3.50	1.941	0.203	30.0	0.199	-1.99%
5	279.27	766.06	2.30	1.573	0.166	20.0	0.172	3.34%
CLEAN FILTER	279.27	766.06	*****	*****	*****	45.1	0.240	0.06%

CURRENT STANDARD FLOW CURVE = 11/30/88
(RESP - b)/M
b = -42.849
M = 366.290
MAGNEHELIC SET POINT = 45.1

LAST CALIBRATION FLOW CURVE = 10/14/88
b = -43.504
M = 364.602
MAGNEHELIC SET POINT = 44.0

DIFFERENCE BETWEEN FLOW CURVES = 2.41%

ETI READING: 2941.9

MAINTENANCE RECORD
(COMPLETE DURING EVERY CALIBRATION)

CONDITION OF MOTOR: GOOD

CONDITION OF MOTOR BRUSHES: CHANGED
#HOURS OF USE(CHANGE AFTER 900HRS): 500

CONDITON OF MOTOR GASKET: GOOD

MAGNEHELIC ZERO AS FOUND: 0.0
AFTER ADJUSTMENT: 0.0

CONDITION OF FILTER GASKETS (2): GOOD
#HOURS OF USE(CHANGE WHEN WORN): 500

CONDITION OF BALL VALVE: GOOD

LEAK CHECK PRIOR TO CALIBRATION: GOOD
LEAK CHECK PRIOR TO CALIBRATION: GOOD

SAMPLING WELL CLEANED: YES

NOTES ON THE PERFORMANCE AND CONDITON OF THE SAMPLER:

POLYURETHANE FOAM SAMPLER CALIBRATION SHEET

Form#: A101
Date: 10/1/89
Revision: 0

ENVIROSPHERE COMPANY
A DIVISION OF EBASCO SERVICES INCORPORATED
211 CONGRESS STREET
BOSTON, MASSACHUSETTES 02199

PROJECT: NEW BEDFORD HARBOR
SITE: SOUTHWEST (SWP-C)
DATE/TIME: 1/13/89
TECHNICIAN: HANSON

CALIB.UNIT NO.: 86C
CERTIFICATION DATE: 7/20/88
UNIT CALIBRATION CURVE:
M: 9.9599
b: -0.0804

PUF SAMPLER NO.: 6931
FLOW MEAS. DEVICE NO.: 92
MOTOR NO.: 0988-0479
FLOW CONTROLLER NO.: --
TIMER NO.: 0886-1327
ETI NO: 0988-1039

DATE OF LAST CALIB.: 11/30/88
DATE OF INT.CALIB.: 10/14/88

BAR. PRESS.(INCHES HG.): 29.82
BAR. PRESS.(MM/HG): 757.43
TEMPERATURE (F): 35.6
TEMPERATURE (C): 2.0
TEMPERATURE (K): 275.16
STP CORRECTION FACTOR: 1.0799

TEST POINT	AMB. TEMP. (K)	AMB. PRESS. (MM)	REFERENCE MANOMETER OR MAGNEHELIC (Y) INCHES OF WATER (OBS.)	INCHES OF WATER (STD.)	REFERENCE FLOW RATE (M3)	SAMPLER MAGNAHELIC (X) INCHES OF WATER (RESP.)	FLOW RATE BASED ON CAL. (M3)	ACCURACY OF CURVE PTS. (%)
1	275.16	757.42	6.40	2.629	0.272	60.0	0.280	3.04%
2	275.16	757.42	5.60	2.459	0.255	50.0	0.252	-1.03%
3	275.16	757.42	4.60	2.229	0.232	40.0	0.224	-3.20%
4	275.16	757.42	3.40	1.916	0.200	30.0	0.196	-1.98%
5	275.16	757.42	2.20	1.541	0.163	20.0	0.169	3.52%
CLEAN FILTER	275.16	757.42	*****	*****	*****	45.6	0.243	0.07%

CURRENT STANDARD FLOW CURVE = 1/13/89
(RESP - b)/M
b = -40.349
M = 358.014
MAGNEHELIC SET POINT = 45.6

LAST CALIBRATION FLOW CURVE = 11/30/88
b = -42.849
M = 366.290
MAGNEHELIC SET POINT = 45.1

DIFFERENCE BETWEEN FLOW CURVES = 1.14%

ETI READING: 62389.1

MAINTENANCE RECORD
(COMPLETE DURING EVERY CALIBRATION)

CONDITION OF MOTOR: GOOD
CONDITION OF BALL VALVE: GOOD

CONDITION OF MOTOR BRUSHES: GOOD
LEAK CHECK PRIOR TO CALIBRATION: GOOD
#HOURS OF USE(CHANGE AFTER 900HRS): 392
LEAK CHECK PRIOR TO CALIBRATION: GOOD

CONDITON OF MOTOR GASKET: GOOD
SAMPLING WELL CLEANED: YES

MAGNEHELIC ZERO AS FOUND: 0.0
AFTER ADJUSTMENT: 0.0

NOTES ON THE PERFORMANCE AND CONDITON OF THE SAMPLER:

CONDITION OF FILTER GASKETS (2): GOOD
#HOURS OF USE(CHANGE WHEN WORN): 1039

POLYURETHANE FOAM SAMPLER CALIBRATION SHEET

Form#: A101
Date: 10/1/88
Revision: 0

ENVIROSPHERE COMPANY
A DIVISION OF EBASCO SERVICES INCORPORATED
211 CONGRESS STREET
BOSTON, MASSACHUSETTES 02199

PROJECT: NEW BEDFORD HARBOR
SITE: SOUTHWEST (SWF-C)
DATE/TIME: 1/27/89
TECHNICIAN: HANSON

CALIB.UNIT NO.: 86C
CERTIFICATION DATE: 7/20/88
UNIT CALIBRATION CURVE:
M: 9.9599
b: -0.0804

PUF SAMPLER NO.: 6931
FLOW MEAS. DEVICE NO.: 92
MOTOR NO.: 0988-0478
FLOW CONTROLLER NO.: --
TIMER NO.: 0888-1327
ETI NO: 0988-1039

DATE OF LAST CALIB.: 1/13/89
DATE OF INT.CALIB.: 10/14/88

BAR. PRESS.(INCHES HG): 29.92
BAR. PRESS.(MM/HG): 759.97
TEMPERATURE (F): 22.5
TEMPERATURE (C): -5.3
TEMPERATURE (K): 267.88
STP CORRECTION FACTOR: 1.1130

ETI READING: --

TEST POINT	AMB. TEMP. (K)	AMB. PRESS. (MM)	REFERENCE MANOMETER OR MAGNEHELIC (Y) INCHES OF WATER (OBS.)	REFERENCE MANOMETER OR MAGNEHELIC (Y) INCHES OF WATER (STD.)	REFERENCE MANOMETER OR MAGNEHELIC (Y) REFERENCE FLOW RATE (M3)	SAMPLER MAGNAHELIC (X) INCHES OF WATER (RESP.)	SAMPLER MAGNAHELIC (X) FLOW RATE BASED ON CAL. (M3)	ACCURACY OF CURVE PTS. (%)
1	267.88	759.96	6.60	2.710	0.280	60.0	0.287	2.37%
2	267.88	759.96	5.80	2.541	0.263	50.0	0.259	-1.68%
3	267.88	759.96	4.60	2.263	0.235	40.0	0.231	-1.83%
4	267.88	759.96	3.40	1.945	0.203	30.0	0.203	-0.22%
5	267.88	759.96	2.40	1.634	0.172	20.0	0.175	1.66%
CLEAN								
FILTER	267.88	759.96	*****	*****	*****	43.3	0.240	0.04%

CURRENT STANDARD FLOW CURVE = (RESP - b)/M
1/27/89
b = -42.727
M = 358.387
MAGNEHELIC SET POINT = 43.3

LAST CALIBRATION FLOW CURVE = b = -40.349
1/13/89 M = 358.014
MAGNEHELIC SET POINT = 45.6

DIFFERENCE BETWEEN FLOW CURVES = -5.02%

MAINTENANCE RECORD
(COMPLETE DURING EVERY CALIBRATION)

CONDITION OF MOTOR: GOOD

CONDITION OF MOTOR BRUSHES: GOOD
#HOURS OF USE(CHANGE AFTER 900HRS): 512

CONDITON OF MOTOR GASKET: GOOD

MAGNEHELIC ZERO AS FOUND: 0.0
AFTER ADJUSTMENT: 0.0

CONDITION OF FILTER GASKETS (2): GOOD
#HOURS OF USE(CHANGE WHEN WORN): 1551

CONDITION OF BALL VALVE: GOOD

LEAK CHECK PRIOR TO CALIBRATION: GOOD
LEAK CHECK PRIOR TO CALIBRATION: GOOD

SAMPLING WELL CLEANED: YES

NOTES ON THE PERFORMANCE AND CONDITON OF THE SAMPLER:

POLYURETHANE FOAM SAMPLER CALIBRATION SHEET

Form#: A101
Date: 10/1/88
Revision: 0

ENVIROSPHERE COMPANY
A DIVISION OF EBASCO SERVICES INCORPORATED
211 CONGRESS STREET
BOSTON, MASSACHUSETTES 02199

PROJECT: NEW BEDFORD HARBOR
SITE: SOUTHWEST (SWP-C)
DATE/TIME: 3/31/89
TECHNICIAN: HANSON

CALIB.UNIT NO.: 860
CERTIFICATION DATE: 7/20/88
UNIT CALIBRATION CURVE:
M: 9.9599
b: -0.0804

PUF SAMPLER NO.: 6931
FLOW MEAS. DEVICE NO.: 92
MOTOR NO.: 0988-0478
FLOW CONTROLLER NO.: --
TIMER NO.: 0888-1327
ETI NO: 0988-1039

DATE OF LAST CALIB.: 1/27/89
DATE OF INT.CALIB.: 10/14/88

BAR. PRESS.(INCHES HG): 25.69
BAR. PRESS.(MM/HG): 754.13
TEMPERATURE (F): 40.0
TEMPERATURE (C): 4.4
TEMPERATURE (K): 277.60
STP CORRECTION FACTOR: 1.0657

TEST POINT	AMB. TEMP. (K)	AMB. PRESS. (MM)	REFERENCE MANOMETER OR MAGNEHELIC (Y) INCHES OF WATER (OBS.)	REFERENCE MANOMETER OR MAGNEHELIC (Y) INCHES OF WATER (STD.)	REFERENCE MANOMETER OR MAGNEHELIC (Y) REFERENCE FLOW RATE (M3)	SAMPLER MAGNAHELIC (X) INCHES OF WATER (RESP.)	FLOW RATE BASED ON CAL. (M3)	ACCURACY OF CURVE PTS. (%)
1	277.60	754.12	7.25	2.780	0.287	70.0	0.292	1.73%
2	277.60	754.12	6.50	2.632	0.272	60.0	0.270	-1.00%
3	277.60	754.12	5.50	2.421	0.251	50.0	0.247	-1.63%
4	277.60	754.12	4.40	2.165	0.225	40.0	0.225	-0.43%
5	277.60	754.12	3.40	1.904	0.199	30.0	0.202	1.41%
CLEAN FILTER	277.60	754.12	*****	*****	*****	46.9	0.240	0.02%

CURRENT STANDARD FLOW CURVE = (RESP - b)/M
3/31/89
b = -59.646
M = 443.793
MAGNEHELIC SET POINT = 46.9

LAST CALIBRATION FLOW CURVE = b = -59.646
1/27/89 M = 443.793
MAGNEHELIC SET POINT = 46.9

DIFFERENCE BETWEEN FLOW CURVES = 0.00%

ETI READING: 66685

MAINTENANCE RECORD
(COMPLETE DURING EVERY CALIBRATION)

CONDITION OF MOTOR: GOOD

CONDITION OF MOTOR BRUSHES: CHANGED
#HOURS OF USE(CHANGE AFTER 900HRS): 512

CONDITON OF MOTOR GASKET: GOOD

MAGNEHELIC ZERO AS FOUND: 0.0
AFTER ADJUSTMENT: 0.0

CONDITION OF FILTER GASKETS (2): GOOD
#HOURS OF USE(CHANGE WHEN WORN): 1551

CONDITION OF BALL VALVE: GOOD

LEAK CHECK PRIOR TO CALIBRATION: GOOD
LEAK CHECK PRIOR TO CALIBRATION: GOOD

SAMPLING WELL CLEANED: YES

NOTES ON THE PERFORMANCE AND CONDITON OF THE SAMPLER:

POLYURETHANE FOAM SAMPLER CALIBRATION SHEET

Form#: A101
Date: 10/1/88
Revision: 0

ENVIROSPHERE COMPANY
A DIVISION OF EBASCO SERVICES INCORPORATED
211 CONGRESS STREET
BOSTON, MASSACHUSETTES 02199

PROJECT: NEW BEDFORD HARBOR
SITE: SOUTHWEST (SWP-C)
DATE/TIME: 4/27/89
TECHNICIAN: HANSON

CALIB.UNIT NO.: 86C
CERTIFICATION DATE: 7/20/88
UNIT CALIBRATION CURVE:
M: 9.9599
b: -0.0804

PUF SAMPLER NO.: 6931
FLOW MEAS. DEVICE NO.: 92
MOTOR NO.: 0988-0478
FLOW CONTROLLER NO.: --
TIMER NO.: 0888-1327
ETI NO: 0988-1039

DATE OF LAST CALIB.: 3/31/89
DATE OF INT.CALIB.: 10/14/88

BAR. PRESS.(INCHES HG): 29.82
BAR. PRESS.(MM/HG): 757.43
TEMPERATURE (F): 49.0
TEMPERATURE (C): 9.4
TEMPERATURE (K): 282.60
STP CORRECTION FACTOR: 1.0515

TEST POINT	AMB. TEMP. (K)	AMB. PRESS. (MM)	REFERENCE MANOMETER OR MAGNEHELIC: INCHES OF WATER (OBS.) (Y)	INCHES OF WATER (STD.)	REFERENCE FLOW RATE (M3) (X)	SAMPLER MAGNAHELIC: INCHES OF WATER (RESP.)	FLOW RATE BASED ON CAL. (M3)	ACCURACY OF CURVE PTS. (%)
1	282.60	757.42	7.40	2.789	0.288	70.0	0.290	0.68%
2	282.60	757.42	6.25	2.564	0.265	60.0	0.268	0.92%
3	282.60	757.42	5.55	2.416	0.251	50.0	0.246	-1.95%
4	282.60	757.42	4.50	2.175	0.226	40.0	0.224	-1.30%
5	282.60	757.42	3.40	1.891	0.198	30.0	0.201	1.73%
CLEAN FILTER	282.60	757.42	*****	*****	*****	47.4	0.240	0.02%

CURRENT STANDARD FLOW CURVE = 4/27/89
(RESP - b)/M
b = -60.741
M = 450.681
MAGNEHELIC SET POINT = 47.4

LAST CALIBRATION FLOW CURVE = 3/31/89
b = -59.646
M = 443.793
MAGNEHELIC SET POINT = 46.9

DIFFERENCE BETWEEN FLOW CURVES = 1.19%

ETI READING: 89267

MAINTENANCE RECORD
(COMPLETE DURING EVERY CALIBRATION)

CONDITION OF MOTOR: GOOD

CONDITION OF MOTOR BRUSHES: GOOD
#HOURS OF USE(CHANGE AFTER 900HRS): 368

CONDITON OF MOTOR GASKET: GOOD

MAGNEHELIC ZERO AS FOUND: 0.0
AFTER ADJUSTMENT: 0.0

CONDITION OF FILTER GASKETS (2): GOOD
#HOURS OF USE(CHANGE WHEN WORN): 1919

CONDITION OF BALL VALVE: GOOD

LEAK CHECK PRIOR TO CALIBRATION: GOOD
LEAK CHECK PRIOR TO CALIBRATION: GOOD

SAMPLING WELL CLEANED: YES

NOTES ON THE PERFORMANCE AND CONDITON OF THE SAMPLER:

POLYURETHANE FOAM SAMPLER CALIBRATION SHEET

Form#: A101
Date: 10/1/88
Revision: 0

ENVIROSPHERE COMPANY
A DIVISION OF EBASCO SERVICES INCORPORATED
211 CONGRESS STREET
BOSTON, MASSACHUSETTES 02199

PROJECT: NEW BEDFORD HARBOR
SITE: SOUTHEAST (SEP-1)
DATE/TIME: 10/14/88
TECHNICIAN: HANSON

CALIB.UNIT NO.: 86C
CERTIFICATION DATE: 7/20/88
UNIT CALIBRATION CURVE:
M: 9.9599
b: -0.0804

PUF SAMPLER NO.: 6935
FLOW MEAS. DEVICE NO.: 87
MOTOR NO.: 0988-0467
FLOW CONTROLLER NO.: --
TIMER NO.: 0888-1292
ETI NO: 31475

DATE OF LAST CALIB.: 10/14/88
DATE OF INT.CALIB.: 10/14/88

BAR. PRESS.(INCHES HG): 30.24
BAR. PRESS.(MM/HG): 768.10
TEMPERATURE (F): 51.0
TEMPERATURE (C): 10.6
TEMPERATURE (K): 283.72
STP CORRECTION FACTOR: 1.0621

ETI READING: 65.8

TEST POINT	AMB. TEMP. (K)	AMB. PRESS. (MM)	REFERENCE MANOMETER OR MAGNEHELIC (Y) INCHES OF WATER (OBS.)	REFERENCE MANOMETER OR MAGNEHELIC (Y) INCHES OF WATER (STD.)	REFERENCE MANOMETER OR MAGNEHELIC (Y) REFERENCE FLOW RATE (M3)	SAMPLER MAGNAHELIC (X) INCHES OF WATER (RESP.)	SAMPLER MAGNAHELIC (X) FLOW RATE BASED ON CAL. (M3)	ACCURACY OF CURVE PTS. (%)
1	283.71	768.09	6.90	2.707	0.280	60.0	0.281	0.27%
2	283.71	768.09	5.30	2.373	0.246	50.0	0.251	2.08%
3	283.71	768.09	4.50	2.186	0.228	40.0	0.222	-2.36%
4	283.71	768.09	3.35	1.886	0.197	30.0	0.193	-2.27%
5	283.71	768.09	2.15	1.511	0.160	20.0	0.164	2.49%
CLEAN FILTER	283.71	768.09	*****	*****	*****	46.1	0.240	0.04%

CURRENT STANDARD FLOW CURVE = (RESP - b)/M
10/14/88
b = -36.063
M = 342.323
MAGNEHELIC SET POINT = 46.1

LAST CALIBRATION FLOW CURVE = b = -36.063
10/14/88 M = 342.323
MAGNEHELIC SET POINT = 46.1

DIFFERENCE BETWEEN FLOW CURVES = 0.00%

MAINTENANCE RECORD
(COMPLETE DURING EVERY CALIBRATION)

CONDITION OF MOTOR: NEW

CONDITION OF MOTOR BRUSHES: NEW
#HOURS OF USE(CHANGE AFTER 900HRS): 0

CONDITON OF MOTOR GASKET: NEW

MAGNEHELIC ZERO AS FOUND: 0.0
AFTER ADJUSTMENT: 0.0

CONDITION OF FILTER GASKETS (2): NEW
#HOURS OF USE(CHANGE WHEN WORN): 0

CONDITION OF BALL VALVE: GOOD

LEAK CHECK PRIOR TO CALIBRATION: GOOD
LEAK CHECK PRIOR TO CALIBRATION: GOOD

SAMPLING WELL CLEANED: YES

NOTES ON THE PERFORMANCE AND CONDITON OF THE SAMPLER:

POLYURETHANE FOAM SAMPLER CALIBRATION SHEET

Form#: A101
Date: 10/1/88
Revision: 0

ENVIROSPHERE COMPANY
A DIVISION OF EBASCO SERVICES INCORPORATED
211 CONGRESS STREET
BOSTON, MASSACHUSETTES 02199

PROJECT: NEW BEDFORD HARBOR
SITE: SOUTHEAST (SEP-1)
DATE/TIME: 11/30/88
TECHNICIAN: HANSON

CALIB.UNIT NO.: 860
CERTIFICATION DATE: 7/20/88
UNIT CALIBRATION CURVE:
M: 9.9599
b: -0.0804

PUF SAMPLER NO.: 6935
FLOW MEAS. DEVICE NO.: 87
MOTOR NO.: 0985-0467
FLOW CONTROLLER NO.: --
TIMER NO.: 0886-1292
ETI NO: 31475

DATE OF LAST CALIB.: 10/14/88
DATE OF INT.CALIB.: 10/14/88

BAR. PRESS.(INCHES HG): 30.16
BAR. PRESS.(MM/HG): 766.07
TEMPERATURE (F): 43.0
TEMPERATURE (C): 6.1
TEMPERATURE (K): 279.27
STP CORRECTION FACTOR: 1.0762

ETI READING: 21729

TEST POINT	AMB. TEMP. (K)	AMB. PRESS. (MM)	REFERENCE MANOMETER OR MAGNEHELIC (Y) INCHES OF WATER (OBS.)	INCHES OF WATER (STD.)	REFERENCE FLOW RATE (M3)	SAMPLER MAGNAHELIC (X) INCHES OF WATER (RESP.)	FLOW RATE BASED ON CAL. (M3)	ACCUFACY OF CURVE PTS. (%)
1	279.27	766.06	6.30	2.604	0.270	60.0	0.276	2.48%
2	279.27	766.06	5.30	2.388	0.248	50.0	0.247	-0.16%
3	279.27	766.06	4.40	2.176	0.227	40.0	0.219	-3.45%
4	279.27	766.06	3.20	1.856	0.194	30.0	0.190	-2.26%
5	279.27	766.06	2.00	1.467	0.155	20.0	0.161	3.90%
CLEAN FILTER	279.27	766.06	*****	*****	*****	47.4	0.240	0.08%

CURRENT STANDARD FLOW CURVE = 11/30/88 (RESP - b)/M
b = -36.134
M = 348.068
MAGNEHELIC SET POINT = 47.4

LAST CALIBRATION FLOW CURVE = 10/14/88
b = -36.063
M = 342.323
MAGNEHELIC SET POINT = 46.1

DIFFERENCE BETWEEN FLOW CURVES = 2.84%

MAINTENANCE RECORD
(COMPLETE DURING EVERY CALIBRATION)

CONDITION OF MOTOR: GOOD

CONDITION OF MOTOR BRUSHES: CHANGED
#HOURS OF USE(CHANGE AFTER 900HRS): 500

CONDITON OF MOTOR GASKET: GOOD

MAGNEHELIC ZERO AS FOUND: 0.0
AFTER ADJUSTMENT: 0.0

CONDITION OF FILTER GASKETS (2): GOOD
#HOURS OF USE(CHANGE WHEN WORN): 500

CONDITION OF BALL VALVE: GOOD

LEAK CHECK PRIOR TO CALIBRATION: GOOD
LEAK CHECK PRIOR TO CALIBRATION: GOOD

SAMPLING WELL CLEANED: YES

NOTES ON THE PERFORMANCE AND CONDITON OF THE SAMPLER:

POLYURETHANE FOAM SAMPLER CALIBRATION SHEET

Form#: A101
Date: 10/1/88
Revision: 0

ENVIROSPHERE COMPANY
A DIVISION OF EBASCO SERVICES INCORPORATED
211 CONGRESS STREET
BOSTON, MASSACHUSETTES 02199

PROJECT: NEW BEDFORD HARBOR
SITE: SOUTHEAST (SEF-1)
DATE/TIME: 1/13/89
TECHNICIAN: HANSON

CALIB.UNIT NO.: 86C
CERTIFICATION DATE: 7/20/88
UNIT CALIBRATION CURVE:
M: 9.9599
b: -0.0804

PUF SAMPLER NO.: 6935
FLOW MEAS. DEVICE NO.: 87
MOTOR NO.: 098E-0467
FLOW CONTROLLER NO.: --
TIMER NO.: 0888-1292
ETI NO: 31475

		REFERENCE MANOMETER OR MAGNEHELIC (Y)			SAMPLER MAGNAHELIC (X)		
TEST POINT	AMB. TEMP. (K)	AMB. PRESS. (MM)	INCHES OF WATER (OBS.)	INCHES OF WATER (STD.)	REFERENCE FLOW RATE (M3)	INCHES OF WATER (RESP.)	FLOW RATE BASED ON CAL. (M3)	ACCURACY OF CURVE PTS. (%)
1	275.16	757.42	5.80	2.503	0.259	60.0	0.271	4.33%
2	275.16	757.42	5.10	2.347	0.244	50.0	0.240	-1.43%
3	275.16	757.42	4.30	2.155	0.224	40.0	0.210	-6.51%
4	275.16	757.42	2.40	1.610	0.170	30.0	0.179	5.75%
5	275.16	757.42	1.90	1.432	0.152	20.0	0.149	-1.88%
CLEAN FILTER	275.16	757.42	*****	*****	*****	49.9	0.240	0.05%

DATE OF LAST CALIB.: 11/30/88
DATE OF INT.CALIB.: 10/14/88

BAR. PRESS.(INCHES HG): 29.82
BAR. PRESS.(MM/HG): 757.43
TEMPERATURE (F): 35.6
TEMPERATURE (C): 2.0
TEMPERATURE (K): 275.16
STP CORRECTION FACTOR: 1.0799

CURRENT STANDARD FLOW CURVE = (RESP - b)/M
1/13/89
b = -29.048
M = 329.088
MAGNEHELIC SET POINT = 49.9

LAST CALIBRATION FLOW CURVE = b = -36.134
11/30/88 M = 348.068
MAGNEHELIC SET POINT = 47.4

DIFFERENCE BETWEEN FLOW CURVES = 5.34%

ETI READING: 53738

MAINTENANCE RECORD
(COMPLETE DURING EVERY CALIBRATION)

CONDITION OF MOTOR: GOOD

CONDITION OF MOTOR BRUSHES: GOOD
#HOURS OF USE(CHANGE AFTER 900HRS): 392

CONDITON OF MOTOR GASKET: GOOD

MAGNEHELIC ZERO AS FOUND: 0.0
AFTER ADJUSTMENT: 0.0

CONDITION OF FILTER GASKETS (2): GOOD
#HOURS OF USE(CHANGE WHEN WORN): 1039

CONDITION OF BALL VALVE: GOOD

LEAK CHECK PRIOR TO CALIBRATION: GOOD
LEAK CHECK PRIOR TO CALIBRATION: GOOD

SAMPLING WELL CLEANED: YES

NOTES ON THE PERFORMANCE AND CONDITON OF THE SAMPLER:

POLYURETHANE FOAM SAMPLER CALIBRATION SHEET

Form#: A101
Date: 10/1/88
Revision: 0

ENVIROSPHERE COMPANY
A DIVISION OF EBASCO SERVICES INCORPORATED
211 CONGRESS STREET
BOSTON, MASSACHUSETTES 02199

PROJECT: NEW BEDFORD HARBOR
SITE: SOUTHEAST (SEP-1)
DATE/TIME: 1/27/89
TECHNICIAN: HANSON

CALIB.UNIT NO.: 86C
CERTIFICATION DATE: 7/20/88
UNIT CALIBRATION CURVE:
M: 9.9599
b: -0.0804

PUF SAMPLER NO.: 6935
FLOW MEAS. DEVICE NO.: 87
MOTOR NO.: 0988-0467
FLOW CONTROLLER NO.: --
TIMER NO.: 0888-1292
ETI NO: 31475

TEST POINT	AMB. TEMP. (K)	AMB. PRESS. (MM)	REFERENCE MANOMETER OR MAGNEHELIC (Y) INCHES OF WATER (OBS.)	REFERENCE INCHES OF WATER (STD.)	REFERENCE FLOW RATE (M3)	SAMPLER MAGNAHELIC (X) INCHES OF WATER (RESP.)	FLOW RATE BASED ON CAL. (M3)	ACCURACY OF CURVE PTS. (%)
1	267.88	759.96	6.30	2.648	0.274	60.0	0.283	3.33%
2	267.88	759.96	5.05	2.371	0.246	50.0	0.251	1.82%
3	267.88	759.96	4.20	2.162	0.225	40.0	0.218	-3.12%
4	267.88	759.96	3.40	1.945	0.203	30.0	0.186	-8.72%
5	267.88	759.96	1.60	1.334	0.142	20.0	0.153	7.84%
CLEAN FILTER	267.88	759.96	*****	*****	*****	46.7	0.240	0.23%

DATE OF LAST CALIB.: 1/13/89
DATE OF INT.CALIB.: 10/14/88

BAR. PRESS.(INCHES HG): 29.92
BAR. PRESS.(MM/HG): 759.97
TEMPERATURE (F): 22.5
TEMPERATURE (C): -5.3
TEMPERATURE (K): 267.88
STP CORRECTION FACTOR: 1.1130

CURRENT STANDARD FLOW CURVE = 1/27/89
(RESP - b)/M
b = -27.181
M = 307.992
MAGNEHELIC SET POINT = 46.7

LAST CALIBRATION FLOW CURVE = 1/13/89
b = -29.049
M = 329.088
MAGNEHELIC SET POINT = 49.9

DIFFERENCE BETWEEN FLOW CURVES = -6.40%

ETI READING: --

MAINTENANCE RECORD
(COMPLETE DURING EVERY CALIBRATION)

CONDITION OF MOTOR: GOOD

CONDITION OF MOTOR BRUSHES: GOOD
#HOURS OF USE(CHANGE AFTER 900HRS): 512

CONDITON OF MOTOR GASKET: GOOD

MAGNEHELIC ZERO AS FOUND: 0.0
AFTER ADJUSTMENT: 0.0

CONDITION OF FILTER GASKETS (2): GOOD
#HOURS OF USE(CHANGE WHEN WORN): 1551

CONDITION OF BALL VALVE: GOOD

LEAK CHECK PRIOR TO CALIBRATION: GOOD
LEAK CHECK PRIOR TO CALIBRATION: GOOD

SAMPLING WELL CLEANED: YES

NOTES ON THE PERFORMANCE AND CONDITON OF THE SAMPLER:

POLYURETHANE FOAM SAMPLER CALIBRATION SHEET

Form#: A101
Date: 10/1/88
Revision: 0

ENVIROSPHERE COMPANY
A DIVISION OF EBASCO SERVICES INCORPORATED
211 CONGRESS STREET
BOSTON, MASSACHUSETTES 02199

PROJECT: NEW BEDFORD HARBOR
SITE: SOUTHEAST (SEP-1)
DATE/TIME: 3/31/89
TECHNICIAN: HANSON

CALIB.UNIT NO.: 86C
CERTIFICATION DATE: 7/20/88
UNIT CALIBRATION CURVE:
M: 9.9599
b: -0.0804

PUF SAMPLER NO.: 6935
FLOW MEAS. DEVICE NO.: 87
MOTOR NO.: 0988-0467
FLOW CONTROLLER NO.: --
TIMER NO.: 0888-1292
ETI NO: 31475

DATE OF LAST CALIB.: 1/27/89
DATE OF INT.CALIB.: 10/14/88

BAR. PRESS.(INCHES HG): 29.69
BAR. PRESS.(MM/HG): 754.10
TEMPERATURE (F): 40.0
TEMPERATURE (C): 4.4
TEMPERATURE (K): 277.60
STP CORRECTION FACTOR: 1.0657

TEST POINT	AMB. TEMP. (K)	AMB. PRESS. (MM)	REFERENCE MANOMETER OR MAGNEHELIC (Y): INCHES OF WATER (OBS.)	REFERENCE: INCHES OF WATER (STD.)	REFERENCE: FLOW RATE (M3)	SAMPLER MAGNAHELIC (X): INCHES OF WATER (RESP.)	SAMPLER: FLOW RATE BASED ON CAL. (M3)	ACCURACY OF CURVE PTS. (%)
1	277.60	754.12	7.45	2.818	0.291	70.0	0.294	1.05%
2	277.60	754.12	6.60	2.652	0.274	60.0	0.272	-0.97%
3	277.60	754.12	5.40	2.399	0.249	50.0	0.249	0.16%
4	277.60	754.12	4.60	2.214	0.230	40.0	0.227	-1.48%
5	277.60	754.12	3.50	1.931	0.202	30.0	0.205	1.30%
CLEAN FILTER	277.60	754.12	*****	*****	*****	45.8	0.240	0.01%

CURRENT STANDARD FLOW CURVE = 3/31/89
(RESP - b)/M
b = -61.532
M = 447.333
MAGNEHELIC SET POINT = 45.8

LAST CALIBRATION FLOW CURVE = 1/27/89
b = -61.532
M = 447.333
MAGNEHELIC SET POINT = 45.8

DIFFERENCE BETWEEN FLOW CURVES = 0.00%

ETI READING: 58041

MAINTENANCE RECORD
(COMPLETE DURING EVERY CALIBRATION)

CONDITION OF MOTOR: GOOD

CONDITION OF MOTOR BRUSHES: CHANGED
#HOURS OF USE(CHANGE AFTER 900HRS): 512

CONDITON OF MOTOR GASKET: GOOD

MAGNEHELIC ZERO AS FOUND: 0.0
AFTER ADJUSTMENT: 0.0

CONDITION OF FILTER GASKETS (2): GOOD
#HOURS OF USE(CHANGE WHEN WORN): 1551

CONDITION OF BALL VALVE: GOOD

LEAK CHECK PRIOR TO CALIBRATION: GOOD
LEAK CHECK PRIOR TO CALIBRATION: GOOD

SAMPLING WELL CLEANED: YES

NOTES ON THE PERFORMANCE AND CONDITON OF THE SAMPLER:

POLYURETHANE FOAM SAMPLER CALIBRATION SHEET

Form#: A101
Date: 10/1/83
Revision: 0

ENVIROSPHERE COMPANY
A DIVISION OF EBASCO SERVICES INCORPORATED
211 CONGRESS STREET
BOSTON, MASSACHUSETTES 02199

PROJECT: NEW BEDFORD HARBOR
SITE: SOUTHEAST (SEF-1)
DATE/TIME: 4/27/89
TECHNICIAN: HANSON

CALIB.UNIT NO.: 86C
CERTIFICATION DATE: 7/20/86
UNIT CALIBRATION CURVE:
M: 9.9599
b: -0.0804

PUF SAMPLER NO.: 6975
FLOW MEAS. DEVICE NO.: 87
MOTOR NO.: 0988-0467
FLOW CONTROLLER NO.: --
TIMER NO.: 0888-1292
ETI NO: 31475

DATE OF LAST CALIB.: 3/31/89
DATE OF INT.CALIB.: 10/14/88

BAR. PRESS.(INCHES HG): 29.82
BAR. PRESS.(MM/HG): 757.43
TEMPERATURE (F): 48.5
TEMPERATURE (C): 9.2
TEMPERATURE (K): 282.33
STP CORRECTION FACTOR: 1.0525

ETI READING: 81080

TEST POINT	AMB. TEMP. (K)	AMB. PRESS. (MM)	REFERENCE MANOMETER OR MAGNEHELIC INCHES OF WATER (OBS.) (Y)	REFERENCE MANOMETER OR MAGNEHELIC INCHES OF WATER (STD.)	REFERENCE MANOMETER OR MAGNEHELIC REFERENCE FLOW RATE (M3)	SAMPLER MAGNAHELIC INCHES OF WATER (RESP.) (X)	SAMPLER MAGNAHELIC FLOW RATE BASED ON CAL. (M3)	ACCURACY OF CURVE PTS. (%)
1	282.32	757.42	7.25	2.762	0.285	70.0	0.292	2.38%
2	282.32	757.42	6.30	2.575	0.267	60.0	0.271	1.63%
3	282.32	757.42	5.30	2.362	0.245	50.0	0.250	1.76%
4	282.32	757.42	5.50	2.406	0.250	40.0	0.228	-8.59%
5	282.32	757.42	3.50	1.919	0.201	30.0	0.207	3.02%
CLEAN FILTER	282.32	757.42	*****	*****	*****	45.5	0.240	0.03%

CURRENT STANDARD FLOW CURVE = 4/27/89
(RESP - b)/M
b = -66.909
M = 468.514
MAGNEHELIC SET POINT = 45.5

LAST CALIBRATION FLOW CURVE = 3/31/89
b = -61.532
M = 447.333
MAGNEHELIC SET POINT = 45.8

DIFFERENCE BETWEEN FLOW CURVES = -0.64%

MAINTENANCE RECORD
(COMPLETE DURING EVERY CALIBRATION)

CONDITION OF MOTOR: GOOD

CONDITION OF MOTOR BRUSHES: CHANGED
#HOURS OF USE(CHANGE AFTER 900HRS): 368

CONDITON OF MOTOR GASKET: GOOD

MAGNEHELIC ZERO AS FOUND: 0.0
AFTER ADJUSTMENT: 0.0

CONDITION OF FILTER GASKETS (S): GOOD
#HOURS OF USE(CHANGE WHEN WORN): 1919

CONDITION OF BALL VALVE: GOOD

LEAK CHECK PRIOR TO CALIBRATION: GOOD
LEAK CHECK PRIOR TO CALIBRATION: GOOD

SAMPLING WELL CLEANED: YES

NOTES ON THE PERFORMANCE AND CONDITON OF THE SAMPLER:

POLYURETHANE FOAM SAMPLER CALIBRATION SHEET

Form#: A101
Date: 10/1/88
Revision: 0

ENVIROSPHERE COMPANY
A DIVISION OF EBASCO SERVICES INCORPORATED
211 CONGRESS STREET
BOSTON, MASSACHUSETTES 02199

PROJECT: NEW BEDFORD HARBOR
SITE: NORTHEAST (NEP-1)
DATE/TIME: 10/14/88
TECHNICIAN: HANSON

CALIB.UNIT NO.: 86C
CERTIFICATION DATE: 7/20/88
UNIT CALIBRATION CURVE:
M: 9.9599
b: -0.0804

PUF SAMPLER NO.: 6934
FLOW MEAS. DEVICE NO.: 79
MOTOR NO.: 0988-0476
FLOW CONTROLLER NO.: --
TIMER NO.: 0888-1324
ETI NO: 0988-1042

DATE OF LAST CALIB.: 10/14/89
DATE OF INT.CALIB.: 10/14/88

BAR. PRESS.(INCHES HG): 30.24
BAR. PRESS.(MM/HG): 768.10
TEMPERATURE (F): 50.0
TEMPERATURE (C): 10.0
TEMPERATURE (K): 283.16
STP CORRECTION FACTOR: 1.0642

ETI READING: 65.3

TEST POINT	AMB. TEMP. (K)	AMB. PRESS. (MM)	REFERENCE MANOMETER OR MAGNEHELIC (Y) INCHES OF WATER (OBS.)	REFERENCE INCHES OF WATER (STD.)	REFERENCE FLOW RATE (M3)	SAMPLER MAGNAHELIC (X) INCHES OF WATER (RESP.)	SAMPLER FLOW RATE BASED ON CAL. (M3)	ACCURACY OF CURVE PTS. (%)
1	283.16	768.09	6.60	2.650	0.274	60.0	0.278	1.51%
2	283.16	768.09	5.60	2.441	0.253	50.0	0.251	-0.76%
3	283.16	768.09	4.50	2.188	0.228	40.0	0.224	-1.57%
4	283.16	768.09	3.40	1.902	0.199	30.0	0.197	-0.95%
5	283.16	768.09	2.35	1.581	0.167	20.0	0.170	1.95%
CLEAN FILTER	283.16	768.09	*****	*****	*****	45.8	0.240	0.04%

CURRENT STANDARD FLOW CURVE = 10/14/88
(RESP - b)/M
b = -42.881
M = 369.666
MAGNEHELIC SET POINT = 45.8

LAST CALIBRATION FLOW CURVE = 10/14/89
b = -42.881
M = 369.666
MAGNEHELIC SET POINT = 45.8

DIFFERENCE BETWEEN FLOW CURVES = 0.00%

MAINTENANCE RECORD
(COMPLETE DURING EVERY CALIBRATION)

CONDITION OF MOTOR: NEW

CONDITION OF MOTOR BRUSHES: NEW
#HOURS OF USE(CHANGE AFTER 900HRS): 0

CONDITON OF MOTOR GASKET: NEW

MAGNEHELIC ZERO AS FOUND: 0.0
AFTER ADJUSTMENT: 0.0

CONDITION OF FILTER GASKETS (Z): NEW
#HOURS OF USE(CHANGE WHEN WORN): 0

CONDITION OF BALL VALVE: GOOD

LEAK CHECK PRIOR TO CALIBRATION: GOOD
LEAK CHECK PRIOR TO CALIBRATION: GOOD

SAMPLING WELL CLEANED: YES

NOTES ON THE PERFORMANCE AND CONDITON OF THE SAMPLER:

POLYURETHANE FOAM SAMPLER CALIBRATION SHEET

Form#: A101
Date: 10/1/88
Revision: 0

ENVIROSPHERE COMPANY
A DIVISION OF EBASCO SERVICES INCORPORATED
211 CONGRESS STREET
BOSTON, MASSACHUSETTES 02199

PROJECT: NEW BEDFORD HARBOR
SITE: NORTHEAST (NEP-1)
DATE/TIME: 11/30/88
TECHNICIAN: HANSON

CALIB.UNIT NO.: 86C
CERTIFICATION DATE: 7/20/88
UNIT CALIBRATION CURVE:
M: 9.9599
b: -0.0804

PUF SAMPLER NO.: 6934
FLOW MEAS. DEVICE NO.: 79
MOTOR NO.: 0988-0476
FLOW CONTROLLER NO.: --
TIMER NO.: 0888-1324
ETI NO: 0988-1042

DATE OF LAST CALIB.: 10/24/88
DATE OF INT.CALIB.: 10/14/88

BAR. PRESS.(INCHES HG): 30.16
BAR. PRESS.(MM/HG): 766.07
TEMPERATURE (F): 43.0
TEMPERATURE (C): 6.1
TEMPERATURE (K): 279.27
STP CORRECTION FACTOR: 1.0762

ETI READING: 21759.2

	TEST POINT	AMB. TEMP. (K)	AMB. PRESS. (MM)	REFERENCE MANOMETER OR MAGNEHELIC INCHES OF WATER (OBS.)	REFERENCE MANOMETER OR MAGNEHELIC INCHES OF WATER (STD.)	REFERENCE MANOMETER OR MAGNEHELIC REFERENCE FLOW RATE (M3) Y	SAMPLER MAGNAHELIC INCHES OF WATER (RESP.) X	SAMPLER MAGNAHELIC FLOW RATE BASED ON CAL. (M3)	ACCURACY OF CURVE PTS. (%)
	1	279.27	766.06	6.60	2.665	0.276	60.0	0.282	2.29%
	2	279.27	766.06	5.60	2.455	0.255	50.0	0.254	-0.39%
	3	279.27	766.06	4.60	2.225	0.231	40.0	0.225	-2.73%
	4	279.27	766.06	3.45	1.927	0.202	30.0	0.197	-2.37%
	5	279.27	766.06	2.20	1.539	0.163	20.0	0.168	3.56%
	CLEAN FILTER	279.27	766.06	*****	*****	*****	45.2	0.240	0.07%

CURRENT STANDARD FLOW CURVE = 11/30/88 (RESP - b)/M
b = -39.272
M = 352.084
MAGNEHELIC SET POINT = 45.2

LAST CALIBRATION FLOW CURVE = 10/24/88
b = -42.831
M = 369.666
MAGNEHELIC SET POINT = 45.8

DIFFERENCE BETWEEN FLOW CURVES = -1.33%

MAINTENANCE RECORD
(COMPLETE DURING EVERY CALIBRATION)

CONDITION OF MOTOR: GOOD

CONDITION OF MOTOR BRUSHES: CHANGED
#HOURS OF USE(CHANGE AFTER 900HRS): 500

CONDITON OF MOTOR GASKET: GOOD

MAGNEHELIC ZERO AS FOUND: 0.0
AFTER ADJUSTMENT: 0.0

CONDITION OF FILTER GASKETS (2): GOOD
#HOURS OF USE(CHANGE WHEN WORN): 500

CONDITION OF BALL VALVE: GOOD

LEAK CHECK PRIOR TO CALIBRATION: GOOD
LEAK CHECK PRIOR TO CALIBRATION: GOOD

SAMPLING WELL CLEANED: YES

NOTES ON THE PERFORMANCE AND CONDITON OF THE SAMPLER:

POLYURETHANE FOAM SAMPLER CALIBRATION SHEET

Form#: A101
Date: 10/1/88
Revision: 0

ENVIROSPHERE COMPANY
A DIVISION OF EBASCO SERVICES INCORPORATED
211 CONGRESS STREET
BOSTON, MASSACHUSETTES 02199

PROJECT: NEW BEDFORD HARBOR
SITE: NORTHEAST (NEP-1)
DATE/TIME: 1/13/89
TECHNICIAN: HANSON

CALIB.UNIT NO.: 86C
CERTIFICATION DATE: 7/20/88
UNIT CALIBRATION CURVE:
M: 9.9599
b: -0.0804

PUF SAMPLER NO.: 6934
FLOW MEAS. DEVICE NO.: 79
MOTOR NO.: 0986-0476
FLOW CONTROLLER NO.: --
TIMER NO.: 0888-1324
ETI NO: 0988-1042

TEST POINT	AMB. TEMP. (K)	AMB. PRESS. (MM)	REFERENCE MANOMETER OR MAGNEHELIC: INCHES OF WATER (OBS.)	REFERENCE: INCHES OF WATER (STD.)	REFERENCE: REFERENCE FLOW RATE (M3) (Y)	SAMPLER MAGNAHELIC: INCHES OF WATER (RESP.) (X)	SAMPLER: FLOW RATE BASED ON CAL. (M3)	ACCURACY OF CURVE PTS. (%)
1	275.16	737.10	6.45	2.604	0.269	60.0	0.275	1.98%
2	275.16	737.10	5.40	2.382	0.247	50.0	0.246	-0.39%
3	275.16	737.10	4.40	2.150	0.224	40.0	0.219	-2.66%
4	275.16	737.10	3.20	1.834	0.192	30.0	0.190	-1.26%
5	275.16	737.10	2.10	1.486	0.157	20.0	0.162	2.72%
CLEAN FILTER	275.16	737.10	*****	*****	*****	47.8	0.249	0.06%

DATE OF LAST CALIB.: 11/30/88
DATE OF INT.CALIB.: 10/14/88

BAR. PRESS.(INCHES HG : 29.02
BAR. PRESS.(MM/HG): 737.11
TEMPERATURE (F): 35.6
TEMPERATURE (C): 2.0
TEMPERATURE (K): 275.16
STP CORRECTION FACTOR: 1.0510

CURRENT STANDARD FLOW CURVE = 1/13/89
(RESP - b)/M
b = -37.148
M = 353.846
MAGNEHELIC SET POINT = 47.8

LAST CALIBRATION FLOW CURVE = 11/30/88
b = -39.272
M = 352.084
MAGNEHELIC SET POINT = 45.2

DIFFERENCE BETWEEN FLOW CURVES = 5.63%

ETI READING: 54776.6

MAINTENANCE RECORD
(COMPLETE DURING EVERY CALIBRATION)

CONDITION OF MOTOR: GOOD

CONDITION OF MOTOR BRUSHES: GOOD
#HOURS OF USE(CHANGE AFTER 900HRS): 392

CONDITON OF MOTOR GASKET: GOOD

MAGNEHELIC ZERO AS FOUND: 0.0
AFTER ADJUSTMENT: 0.0

CONDITION OF FILTER GASKETS (2): GOOD
#HOURS OF USE(CHANGE WHEN WORN): 1039

CONDITION OF BALL VALVE: GOOD

LEAK CHECK PRIOR TO CALIBRATION: GOOD
LEAK CHECK PRIOR TO CALIBRATION: GOOD

SAMPLING WELL CLEANED: YES

NOTES ON THE PERFORMANCE AND CONDITON OF THE SAMPLER:

POLYURETHANE FOAM SAMPLER CALIBRATION SHEET

Form#: A101
Date: 10/1/88
Revision: 0

ENVIROSPHERE COMPANY
A DIVISION OF EBASCO SERVICES INCORPORATED
211 CONGRESS STREET
BOSTON, MASSACHUSETTES 02199

PROJECT: NEW BEDFORD HARBOR
SITE: NORTHEAST (NEP-1)
DATE/TIME: 1/27/89
TECHNICIAN: HANSON

CALIB.UNIT NO.: 86C
CERTIFICATION DATE: 7/20/88
UNIT CALIBRATION CURVE:
M: 9.9599
b: -0.0804

PUF SAMPLER NO.: 6934
FLOW MEAS. DEVICE NO.: 79
MOTOR NO.: 0988-0476
FLOW CONTROLLER NO.: --
TIMER NO.: 0888-1324
ETI NO: 0988-1042

DATE OF LAST CALIB.: 1/13/89
DATE OF INT.CALIB.: 10/14/88

BAR. PRESS.(INCHES HG): 29.92
BAR. PRESS.(MM/HG): 759.97
TEMPERATURE (F): 22.5
TEMPERATURE (C): -5.3
TEMPERATURE (K): 267.88
STP CORRECTION FACTOR: 1.1130

ETI READING: --

TEST POINT	AMB. TEMP. (K)	AMB. PRESS. (MM)	REFERENCE MANOMETER OR MAGNEHELIC (Y) INCHES OF WATER (OBS.)	REFERENCE MANOMETER OR MAGNEHELIC (Y) INCHES OF WATER (STD.)	REFERENCE MANOMETER OR MAGNEHELIC (Y) REFERENCE FLOW RATE (M3)	SAMPLER MAGNAHELIC (X) INCHES OF WATER (RESP.)	SAMPLER MAGNAHELIC (X) FLOW RATE BASED ON CAL. (M3)	ACCURACY OF CURVE PTS. (%)
1	267.88	759.96	6.50	2.690	0.278	60.0	0.293	1.87%
2	267.88	759.96	5.45	2.463	0.255	50.0	0.254	-0.55%
3	267.88	759.96	4.40	2.213	0.230	40.0	0.225	-2.47%
4	267.88	759.96	3.20	1.887	0.198	30.0	0.195	-1.20%
5	267.88	759.96	2.10	1.529	0.162	20.0	0.166	2.63%
CLEAN FILTER	267.88	759.96	#####	#####	#####	45.3	0.240	0.06%

CURRENT STANDARD FLOW CURVE = 1/27/89 — (RESP - b)/M; b = -36.437; M = 340.367 — MAGNEHELIC SET POINT = 45.3

LAST CALIBRATION FLOW CURVE = 1/13/89 — b = -37.148; M = 353.846 — MAGNEHELIC SET POINT = 47.8

DIFFERENCE BETWEEN FLOW CURVES = -5.28%

MAINTENANCE RECORD
(COMPLETE DURING EVERY CALIBRATION)

CONDITION OF MOTOR: GOOD

CONDITION OF MOTOR BRUSHES: GOOD
#HOURS OF USE(CHANGE AFTER 900HRS): 392

CONDITON OF MOTOR GASKET: GOOD

MAGNEHELIC ZERO AS FOUND: 0.0
AFTER ADJUSTMENT: 0.0

CONDITION OF FILTER GASKETS (2): GOOD
#HOURS OF USE(CHANGE WHEN WORN): 1039

CONDITION OF BALL VALVE: GOOD

LEAK CHECK PRIOR TO CALIBRATION: GOOD
LEAK CHECK PRIOR TO CALIBRATION: GOOD

SAMPLING WELL CLEANED: YES

NOTES ON THE PERFORMANCE AND CONDITON OF THE SAMPLER:

POLYURETHANE FOAM SAMPLER CALIBRATION SHEET

Form#: A101
Date: 10/1/88
Revision: 0

ENVIROSPHERE COMPANY
A DIVISION OF EBASCO SERVICES INCORPORATED
211 CONGRESS STREET
BOSTON, MASSACHUSETTES 02199

PROJECT: NEW BEDFORD HARBOR
SITE: NORTHEAST (NEP-1)
DATE/TIME: 3/31/89
TECHNICIAN: HANSON

CALIB.UNIT NO.: 86C
CERTIFICATION DATE: 7/20/88
UNIT CALIBRATION CURVE:
M: 9.9599
b: -0.0804

PUF SAMPLER NO.: 6934
FLOW MEAS. DEVICE NO.: 79
MOTOR NO.: 0988-0476
FLOW CONTROLLER NO.: --
TIMER NO.: 0888-1324
ETI NO: 0986-1042

TEST POINT	AMB. TEMP. (K)	AMB. PRESS. (MM)	REFERENCE MANOMETER OR MAGNEHELIC: INCHES OF WATER (OBS.)	REFERENCE: INCHES OF WATER (STD.)	REFERENCE: FLOW RATE (M3)	SAMPLER MAGNAHELIC: INCHES OF WATER (RESP.)	SAMPLER: FLOW RATE BASED ON CAL. (M3)	ACCURACY OF CURVE PTS. (%)
1	277.60	754.12	7.00	2.731	0.282	70.0	0.285	1.01%
2	277.60	754.12	6.20	2.571	0.266	60.0	0.264	-0.68%
3	277.60	754.12	5.20	2.354	0.244	50.0	0.244	-0.37%
4	277.60	754.12	4.40	2.165	0.225	40.0	0.223	-1.24%
5	277.60	754.12	3.40	1.904	0.199	30.0	0.202	1.35%
CLEAN FILTER	277.60	754.12	*****	*****	*****	48.3	0.240	0.01%

DATE OF LAST CALIB.: 1/27/89
DATE OF INT.CALIB.: 10/14/88

CURRENT STANDARD FLOW CURVE = 3/31/89
(RESP - b)/M
b = -66.962
M = 480.301
MAGNEHELIC SET POINT = 48.3

LAST CALIBRATION FLOW CURVE = 1/27/89
b = -37.148
M = 353.846
MAGNEHELIC SET POINT = 47.8

DIFFERENCE BETWEEN FLOW CURVES = 1.12%

BAR. PRESS.(INCHES HG): 29.69
BAR. PRESS.(MM/HG): 754.13
TEMPERATURE (F): 40.0
TEMPERATURE (C): 4.4
TEMPERATURE (K): 277.60
STP CORRECTION FACTOR: 1.0657

ETI READING: 59062

MAINTENANCE RECORD
(COMPLETE DURING EVERY CALIBRATION)

CONDITION OF MOTOR: GOOD

CONDITION OF MOTOR BRUSHES: CHANGED
#HOURS OF USE(CHANGE AFTER 900HRS): 512

CONDITON OF MOTOR GASKET: GOOD

MAGNEHELIC ZERO AS FOUND: 0.0
AFTER ADJUSTMENT: 0.0

CONDITION OF FILTER BASKETS (2): GOOD
#HOURS OF USE(CHANGE WHEN WORN): 1551

CONDITION OF BALL VALVE: GOOD

LEAK CHECK PRIOR TO CALIBRATION: GOOD
LEAK CHECK PRIOR TO CALIBRATION: GOOD

SAMPLING WELL CLEANED: YES

NOTES ON THE PERFORMANCE AND CONDITON OF THE SAMPLER:

POLYURETHANE FOAM SAMPLER CALIBRATION SHEET

Form#: A101
Date: 10/1/88
Revision: 0

ENVIROSPHERE COMPANY
A DIVISION OF EBASCO SERVICES INCORPORATED
211 CONGRESS STREET
BOSTON, MASSACHUSETTES 02199

PROJECT: NEW BEDFORD HARBOR
SITE: NORTHEAST (NEP-1)
DATE/TIME: 4/27/89
TECHNICIAN: HANSON

CALIB.UNIT NO.: 860
CERTIFICATION DATE: 7/20/88
UNIT CALIBRATION CURVE:
M: 9.9599
b: -0.0804

PUF SAMPLER NO.: 6934
FLOW MEAS. DEVICE NO.: 79
MOTOR NO.: 0985-0476
FLOW CONTROLLER NO.: --
TIMER NO.: 0822-1324
ETI NO: 0958-1042

DATE OF LAST CALIB.: 3/31/89
DATE OF INT.CALIB.: 10/14/88

BAR. PRESS.(INCHES HG): 29.82
BAR. PRESS.(MM/HG): 757.43
TEMPERATURE (F): 48.5
TEMPERATURE (C): 9.2
TEMPERATURE (K): 282.33
STP CORRECTION FACTOR: 1.0525

ETI READING: 82053

TEST POINT	AMB. TEMP. (K)	AMB. PRESS. (MM)	REFERENCE MANOMETER OR MAGNEHELIC (Y) INCHES OF WATER (OBS.)	INCHES OF WATER (STD.)	REFERENCE FLOW RATE (M3)	SAMPLER MAGNAHELIC (X) INCHES OF WATER (RESP.)	FLOW RATE BASED ON CAL. (M3)	ACCURACY OF CURVE PTS. (%)
1	282.32	757.42	7.40	2.791	0.288	70.0	0.297	3.02%
2	282.32	757.42	6.90	2.695	0.279	60.0	0.273	-2.19%
3	282.32	757.42	5.60	2.428	0.252	50.0	0.248	-1.48%
4	282.32	757.42	4.50	2.176	0.227	40.0	0.224	-1.29%
5	282.32	757.42	3.30	1.864	0.195	30.0	0.199	2.06%
CLEAN FILTER	282.32	757.42	*****	*****	*****	46.7	0.249	0.03%

CURRENT STANDARD FLOW CURVE = 4/27/89
(RESP - b)/M
b = -51.497
M = 409.092
MAGNEHELIC SET POINT = 46.7

LAST CALIBRATION FLOW CURVE = 3/31/89
b = -66.962
M = 480.301
MAGNEHELIC SET POINT = 48.3

DIFFERENCE BETWEEN FLOW CURVES = -3.36%

MAINTENANCE RECORD
(COMPLETE DURING EVERY CALIBRATION)

CONDITION OF MOTOR: GOOD

CONDITION OF MOTOR BRUSHES: GOOD
#HOURS OF USE(CHANGE AFTER 900HRS): 368

CONDITON OF MOTOR GASKET: GOOD

MAGNEHELIC ZERO AS FOUND: 0.0
AFTER ADJUSTMENT: 0.0

CONDITION OF FILTER GASKETS (2): GOOD
#HOURS OF USE(CHANGE WHEN WORN): 1919

CONDITION OF BALL VALVE: GOOD

LEAK CHECK PRIOR TO CALIBRATION: GOOD
LEAK CHECK PRIOR TO CALIBRATION: GOOD

SAMPLING WELL CLEANED: YES

NOTES ON THE PERFORMANCE AND CONDITON OF THE SAMPLER:

POLYURETHANE FOAM SAMPLER CALIBRATION SHEET

Form#: A101
Date: 10/1/88
Revision: 0

ENVIROSPHERE COMPANY
A DIVISION OF EBASCO SERVICES INCORPORATED
211 CONGRESS STREET
BOSTON, MASSACHUSETTES 02199

PROJECT: NEW BEDFORD HARBOR
SITE: NOTHWEST (NWP-1)
DATE/TIME: 10/14/88
TECHNICIAN: HANSON

CALIB.UNIT NO.: 86C
CERTIFICATION DATE: 7/20/88
UNIT CALIBRATION CURVE:
M: 9.9599
b: -0.0804

PUF SAMPLER NO.: 6930
FLOW MEAS. DEVICE NO.: 19
MOTOR NO.: 0988-0477
FLOW CONTROLLER NO.: --
TIMER NO.: 0888-1326
ETI NO: 0988-1040

	TEST POINT	AMB. TEMP. (K)	AMB. PRESS. (MM)	REFERENCE MANOMETER OR MAGNEHELIC: INCHES OF WATER (OBS.)	REFERENCE: INCHES OF WATER (STD.)	REFERENCE: FLOW RATE (M3) (Y)	SAMPLER MAGNAHELIC: INCHES OF WATER (RESP.) (X)	SAMPLER: FLOW RATE BASED ON CAL. (M3)	ACCURACY OF CURVE PTS. (%)
	1	283.16	768.09	6.15	2.558	0.265	60.0	0.271	2.42%
	2	283.16	768.09	5.35	2.386	0.248	50.0	0.245	-1.02%
	3	283.16	768.09	4.35	2.152	0.224	40.0	0.219	-2.31%
	4	283.16	768.09	3.30	1.874	0.196	30.0	0.193	-1.79%
	5	283.16	768.09	2.20	1.530	0.162	20.0	0.167	3.97%
	CLEAN FILTER	283.16	768.09	*****	*****	*****	48.0	0.240	0.05%

DATE OF LAST CALIB.: 10/14/88
DATE OF INT.CALIB.: 10/14/88

CURRENT STANDARD FLOW CURVE = 10/14/88
(RESP - b)/M
b = -43.538
M = 381.593
MAGNEHELIC SET POINT = 48.0

LAST CALIBRATION FLOW CURVE = 10/14/88
b = -43.538
M = 381.593
MAGNEHELIC SET POINT = 48.0

DIFFERENCE BETWEEN FLOW CURVES = 0.00%

BAR. PRESS.(INCHES HG): 30.24
BAR. PRESS.(MM/HG): 768.10
TEMPERATURE (F): 50.0
TEMPERATURE (C): 10.0
TEMPERATURE (K): 283.16
STP CORRECTION FACTOR: 1.0642

ETI READING: 190.4

MAINTENANCE RECORD
(COMPLETE DURING EVERY CALIBRATION)

CONDITION OF MOTOR: NEW

CONDITION OF MOTOR BRUSHES: NEW
#HOURS OF USE(CHANGE AFTER 900HRS): 0

CONDITON OF MOTOR GASKET: NEW

MAGNEHELIC ZERO AS FOUND: 0.0
AFTER ADJUSTMENT: 0.0

CONDITION OF FILTER GASKETS (2): NEW
#HOURS OF USE(CHANGE WHEN WORN): 0

CONDITION OF BALL VALVE: GOOD

LEAK CHECK PRIOR TO CALIBRATION: GOOD
LEAK CHECK PRIOR TO CALIBRATION: GOOD

SAMPLING WELL CLEANED: YES

NOTES ON THE PERFORMANCE AND CONDITON OF THE SAMPLER:

POLYURETHANE FOAM SAMPLER CALIBRATION SHEET

Form#: A101
Date: 10/1/88
Revision: 0

ENVIROSPHERE COMPANY
A DIVISION OF EBASCO SERVICES INCORPORATED
211 CONGRESS STREET
BOSTON, MASSACHUSETTES 02199

PROJECT: NEW BEDFORD HARBOR
SITE: NOTHWEST (NWP-1)
DATE/TIME: 11/30/88
TECHNICIAN: HANSON

CALIB.UNIT NO.: 86C
CERTIFICATION DATE: 7/20/88
UNIT CALIBRATION CURVE:
M: 9.9599
b: -0.0804

PUF SAMPLER NO.: 6930
FLOW MEAS. DEVICE NO.: 19
MOTOR NO.: 0988-0477
FLOW CONTROLLER NO.: --
TIMER NO.: 0888-1326
ETI NO: 0988-1040

DATE OF LAST CALIB.: 10/14/88
DATE OF INT.CALIB.: 10/14/88

BAR. PRESS.(INCHES HG): 30.16
BAR. PRESS.(MM/HG): 766.07
TEMPERATURE (F): 40.0
TEMPERATURE (C): 4.4
TEMPERATURE (K): 277.60
STP CORRECTION FACTOR: 1.0826

ETI READING: 18961.2

TEST POINT	AMB. TEMP. (K)	AMB. PRESS. (MM)	REFERENCE MANOMETER OR MAGNEHELIC (Y) INCHES OF WATER (OBS.)	REFERENCE MANOMETER OR MAGNEHELIC (Y) INCHES OF WATER (STD.)	REFERENCE MANOMETER OR MAGNEHELIC (Y) REFERENCE FLOW RATE (M3)	SAMPLER MAGNAHELIC (X) INCHES OF WATER (RESP.)	SAMPLER MAGNAHELIC (X) FLOW RATE BASED ON CAL. (M3)	ACCURACY OF CURVE PTS. (%)
1	277.60	766.06	6.40	2.632	0.272	60.0	0.278	2.18%
2	277.60	766.06	5.50	2.440	0.253	50.0	0.250	-1.77%
3	277.60	766.06	4.30	2.158	0.225	40.0	0.221	-1.69%
4	277.60	766.06	3.20	1.861	0.195	30.0	0.192	-1.40%
5	277.60	766.06	2.10	1.508	0.159	20.0	0.164	2.55%
CLEAN FILTER	277.60	766.06	*****	*****	*****	46.7	0.240	0.05%

CURRENT STANDARD FLOW CURVE = (RESP - b)/M
11/30/88
b = -36.998
M = 348.554
MAGNEHELIC SET POINT = 46.7

LAST CALIBRATION FLOW CURVE = b = -43.538
10/14/88 M = 381.593
MAGNEHELIC SET POINT = 48.0

DIFFERENCE BETWEEN FLOW CURVES = -2.89%

MAINTENANCE RECORD
(COMPLETE DURING EVERY CALIBRATION)

CONDITION OF MOTOR: GOOD

CONDITION OF MOTOR BRUSHES: CHANGED
#HOURS OF USE(CHANGE AFTER 900HRS): 500

CONDITON OF MOTOR GASKET: NEW

MAGNEHELIC ZERO AS FOUND: 0.0
AFTER ADJUSTMENT: 0.0

CONDITION OF FILTER GASKETS (2): GOOD
#HOURS OF USE(CHANGE WHEN WORN): 500

CONDITION OF BALL VALVE: GOOD

LEAK CHECK PRIOR TO CALIBRATION: GOOD
LEAK CHECK PRIOR TO CALIBRATION: GOOD

SAMPLING WELL CLEANED: YES

NOTES ON THE PERFORMANCE AND CONDITON OF THE SAMPLER:

POLYURETHANE FOAM SAMPLER CALIBRATION SHEET

Form#: A101
Date: 10/1/88
Revision: 0

ENVIROSPHERE COMPANY
A DIVISION OF EBASCO SERVICES INCORPORATED
211 CONGRESS STREET
BOSTON, MASSACHUSETTES 02199

PROJECT: NEW BEDFORD HARBOR
SITE: NOTHWEST (NWP-1)
DATE/TIME: 1/13/89
TECHNICIAN: HANSON

CALIB.UNIT NO.: 86C
CERTIFICATION DATE: 7/20/88
UNIT CALIBRATION CURVE:
M: 9.9599
b: -0.0804

PUF SAMPLER NO.: 6930
FLOW MEAS. DEVICE NO.: 19
MOTOR NO.: 0988-0477
FLOW CONTROLLER NO.: --
TIMER NO.: 0886-1726
ETI NO: 0986-1040

TEST POINT	AMB. TEMP. (K)	AMB. PRESS. (MM)	REFERENCE MANOMETER OR MAGNEHELIC (Y) INCHES OF WATER (OBS.)	REFERENCE INCHES OF WATER (STD.)	REFERENCE FLOW RATE (M3)	SAMPLER MAGNAHELIC (X) INCHES OF WATER (RESP.)	FLOW RATE BASED ON CAL. (M3)	ACCURACY OF CURVE PTS. (%)
1	275.16	757.42	6.40	2.629	0.272	60.0	0.277	1.82%
2	275.16	757.42	5.40	2.415	0.251	50.0	0.250	-0.31%
3	275.16	757.42	4.40	2.180	0.227	40.0	0.223	-1.93%
4	275.16	757.42	3.40	1.916	0.200	30.0	0.195	-2.55%
5	275.16	757.42	2.20	1.541	0.163	20.0	0.168	3.26%
CLEAN FILTER	275.16	757.42	*****	*****	*****	46.4	0.240	0.06%

DATE OF LAST CALIB.: 11/30/89
DATE OF INT.CALIB.: 10/14/88

BAR. PRESS.(INCHES HG): 29.82
BAR. PRESS.(MM/HG): 757.43
TEMPERATURE (F): 35.6
TEMPERATURE (C): 2.0
TEMPERATURE (K): 275.16
STP CORRECTION FACTOR: 1.0799

CURRENT STANDARD FLOW CURVE = (RESP - b)/M
1/13/89
b = -41.796
M = 367.529
MAGNEHELIC SET POINT = 46.4

LAST CALIBRATION FLOW CURVE =
11/30/89
b = -36.998
M = 348.554
MAGNEHELIC SET POINT = 46.7

DIFFERENCE BETWEEN FLOW CURVES = -0.52%

ETI READING: 52060.5

MAINTENANCE RECORD
(COMPLETE DURING EVERY CALIBRATION)

CONDITION OF MOTOR: GOOD

CONDITION OF MOTOR BRUSHES: GOOD
#HOURS OF USE(CHANGE AFTER 900HRS): 392

CONDITON OF MOTOR GASKET: GOOD

MAGNEHELIC ZERO AS FOUND: 0.0
AFTER ADJUSTMENT: 0.0

CONDITION OF FILTER GASKETS (2): GOOD
#HOURS OF USE(CHANGE WHEN WORN): 1039

CONDITION OF BALL VALVE: GOOD

LEAK CHECK PRIOR TO CALIBRATION: GOOD
LEAK CHECK PRIOR TO CALIBRATION: GOOD

SAMPLING WELL CLEANED: YES

NOTES ON THE PERFORMANCE AND CONDITON OF THE SAMPLER:

POLYURETHANE FOAM SAMPLER CALIBRATION SHEET

Form#: A101
Date: 10/1/88
Revision: 0

ENVIROSPHERE COMPANY
A DIVISION OF EBASCO SERVICES INCORPORATED
211 CONGRESS STREET
BOSTON, MASSACHUSETTES 02199

PROJECT: NEW BEDFORD HARBOR
SITE: NOTHWEST (NWF-1)
DATE/TIME: 1/27/89
TECHNICIAN: HANSON

CALIB.UNIT NO.: 86C
CERTIFICATION DATE: 7/20/88
UNIT CALIBRATION CURVE:
M: 9.9599
b: -0.0804

PUF SAMPLER NO.: 6930
FLOW MEAS. DEVICE NO.: 19
MOTOR NO.: 0988-0477
FLOW CONTROLLER NO.: --
TIMER NO.: 0888-1326
ETI NO: 0988-1040

DATE OF LAST CALIB.: 1/13/89
DATE OF INT.CALIB.: 10/14/88

BAR. PRESS.(INCHES HG): 29.92
BAR. PRESS.(MM/HG): 759.97
TEMPERATURE (F): 22.5
TEMPERATURE (C): -5.3
TEMPERATURE (K): 267.88
STP CORRECTION FACTOR: 1.1130

ETI READING: --

TEST POINT	AMB. TEMP. (K)	AMB. PRESS. (MM)	REFERENCE MANOMETER OR MAGNEHELIC (Y) INCHES OF WATER (OBS.)	REFERENCE INCHES OF WATER (STD.)	REFERENCE FLOW RATE (M3)	SAMPLER MAGNAHELIC (X) INCHES OF WATER (RESP.)	SAMPLER FLOW RATE BASED ON CAL. (M3)	ACCURACY OF CURVE PTS. (%)
1	267.88	759.96	6.70	2.731	0.282	60.0	0.286	1.41%
2	267.88	759.96	5.60	2.497	0.259	50.0	0.257	-0.69%
3	267.88	759.96	4.40	2.213	0.230	40.0	0.228	-1.12%
4	267.88	759.96	3.35	1.931	0.202	30.0	0.198	-1.76%
5	267.88	759.96	2.20	1.565	0.165	20.0	0.169	2.38%
CLEAN FILTER	267.88	759.96	*****	*****	*****	44.2	0.240	0.05%

CURRENT STANDARD FLOW CURVE = 1/27/89
(RESP - b)/M
b = -37.768
M = 341.581
MAGNEHELIC SET POINT = 44.2

LAST CALIBRATION FLOW CURVE = 1/13/89
b = -41.796
M = 367.529
MAGNEHELIC SET POINT = 46.4

DIFFERENCE BETWEEN FLOW CURVES = -4.74%

MAINTENANCE RECORD
(COMPLETE DURING EVERY CALIBRATION)

CONDITION OF MOTOR: GOOD

CONDITION OF MOTOR BRUSHES: GOOD
#HOURS OF USE(CHANGE AFTER 900HRS): 512

CONDITON OF MOTOR GASKET: GOOD

MAGNEHELIC ZERO AS FOUND: 0.0
AFTER ADJUSTMENT: 0.0

CONDITION OF FILTER GASKETS (2): GOOD
#HOURS OF USE(CHANGE WHEN WORN): 1551

CONDITION OF BALL VALVE: GOOD

LEAK CHECK PRIOR TO CALIBRATION: GOOD
LEAK CHECK PRIOR TO CALIBRATION: GOOD

SAMPLING WELL CLEANED: YES

NOTES ON THE PERFORMANCE AND CONDITON OF THE SAMPLER:

POLYURETHANE FOAM SAMPLER CALIBRATION SHEET

Form#: A101
Date: 10/1/88
Revision: 0

ENVIROSPHERE COMPANY
A DIVISION OF EBASCO SERVICES INCORPORATED
211 CONGRESS STREET
BOSTON, MASSACHUSETTES 02199

PROJECT: NEW BEDFORD HARBOR
SITE: NOTHWEST (NWP-1)
DATE/TIME: 3/31/89
TECHNICIAN: HANSON

CALIB.UNIT NO.: 86C
CERTIFICATION DATE: 7/20/88
UNIT CALIBRATION CURVE:
M: 9.9599
b: -0.0804

PUF SAMPLER NO.: 6930
FLOW MEAS. DEVICE NO.: 19
MOTOR NO.: 0988-0477
FLOW CONTROLLER NO.: --
TIMER NO.: 0888-1326
ETI NO: 0988-1040

TEST POINT	AMB. TEMP. (K)	AMB. PRESS. (MM)	REFERENCE MANOMETER OR MAGNEHELIC: INCHES OF WATER (OBS.) (Y)	REFERENCE: INCHES OF WATER (STD.)	REFERENCE: REFERENCE FLOW RATE (M3)	SAMPLER MAGNAHELIC: INCHES OF WATER (RESP.) (X)	SAMPLER: FLOW RATE BASED ON CAL. (M3)	ACCURACY OF CURVE FTB. (%)
1	277.60	754.12	6.80	2.692	0.278	70.0	0.285	2.39%
2	277.60	754.12	6.20	2.571	0.266	60.0	0.265	-0.61%
3	277.60	754.12	5.50	2.421	0.251	50.0	0.244	-2.82%
4	277.60	754.12	4.40	2.165	0.225	40.0	0.224	-0.84%
5	277.60	754.12	3.40	1.904	0.199	30.0	0.203	1.98%
CLEAN FILTER	277.60	754.12	#####	#####	#####	48.0	0.240	0.02%

DATE OF LAST CALIB.: 1/27/89
DATE OF INT.CALIB.: 10/14/88

CURRENT STANDARD FLOW CURVE = 3/31/89
(RESP - b)/M
b = -69.251
M = 488.590
MAGNEHELIC SET POINT = 48.0

BAR. PRESS.(INCHES HG): 29.69
BAR. PRESS.(MM/HG): 754.13
TEMPERATURE (F): 40.0
TEMPERATURE (C): 4.4
TEMPERATURE (K): 277.60
STP CORRECTION FACTOR: 1.0657

LAST CALIBRATION FLOW CURVE = 1/27/89
b = -37.768
M = 341.581
MAGNEHELIC SET POINT = 44.2

DIFFERENCE BETWEEN FLOW CURVES = 8.59%

ETI READING: 56373

MAINTENANCE RECORD
(COMPLETE DURING EVERY CALIBRATION)

CONDITION OF MOTOR: GOOD

CONDITION OF MOTOR BRUSHES: CHANGED
#HOURS OF USE(CHANGE AFTER 900HRS): 512

CONDITON OF MOTOR GASKET: GOOD

MAGNEHELIC ZERO AS FOUND: 0.0
AFTER ADJUSTMENT: 0.0

CONDITION OF FILTER GASKETS (2): GOOD
#HOURS OF USE(CHANGE WHEN WORN): 1551

CONDITION OF BALL VALVE: GOOD

LEAK CHECK PRIOR TO CALIBRATION: GOOD
LEAK CHECK PRIOR TO CALIBRATION: GOOD

SAMPLING WELL CLEANED: YES

NOTES ON THE PERFORMANCE AND CONDITON OF THE SAMPLER:

POLYURETHANE FOAM SAMPLER CALIBRATION SHEET

Form#: A101
Date: 10/1/88
Revision: 0

ENVIROSPHERE COMPANY
A DIVISION OF EBASCO SERVICES INCORPORATED
211 CONGRESS STREET
BOSTON, MASSACHUSETTES 02199

PROJECT: NEW BEDFORD HARBOR
SITE: BACKGROUND (BG-1)
DATE/TIME: 10/14/88
TECHNICIAN: HANSON

CALIB.UNIT NO.: 860
CERTIFICATION DATE: 7/20/88
UNIT CALIBRATION CURVE:
M: 9.9599
b: -0.0804

PUF SAMPLER NO.: 6932
FLOW MEAS. DEVICE NO.: B3
MOTOR NO.: 0988-0480
FLOW CONTROLLER NO.: --
TIMER NO.: 0988-1284
ETI NO: 0988-1037

			REFERENCE MANOMETER OR MAGNEHELIC			SAMPLER MAGNAHELIC		
TEST POINT	AMB. TEMP. (K)	AMB. PRESS. (MM)	INCHES OF WATER (OBS.)	INCHES OF WATER (STD.) (Y)	REFERENCE FLOW RATE (M3)	INCHES OF WATER (RESP.) (X)	FLOW RATE BASED ON CAL. (M3)	ACCURACY OF CURVE PTS. (%)
1	283.16	768.09	6.35	2.600	0.269	60.0	0.274	1.97%
2	283.16	768.09	5.40	2.397	0.249	50.0	0.247	-0.50%
3	283.16	768.09	4.40	2.164	0.225	40.0	0.221	-2.14%
4	283.16	768.09	3.35	1.888	0.198	30.0	0.194	-2.06%
5	283.16	768.09	2.20	1.530	0.162	20.0	0.167	3.05%
CLEAN FILTER	283.16	768.09	*****	*****	*****	47.2	0.240	0.06%

DATE OF LAST CALIB.: --
DATE OF INT.CALIB.: 10/14/88

CURRENT STANDARD FLOW CURVE = (RESP - b)/M
10/14/88
b = -41.862
M = 371.255
MAGNEHELIC SET POINT = 47.2

BAR. PRESS.(INCHES HG): 30.24
BAR. PRESS.(MM/HG): 768.10
TEMPERATURE (F): 50.0
TEMPERATURE (C): 10.0
TEMPERATURE (K): 283.16
STP CORRECTION FACTOR: 1.0642

LAST CALIBRATION FLOW CURVE = b = M =
--
MAGNEHELIC SET POINT = 0.0

DIFFERENCE BETWEEN FLOW CURVES =

ETI READING: 70.5

MAINTENANCE RECORD
(COMPLETE DURING EVERY CALIBRATION)

CONDITION OF MOTOR: NEW

CONDITION OF MOTOR BRUSHES: NEW
#HOURS OF USE(CHANGE AFTER 900HRS): 0

CONDITON OF MOTOR GASKET: NEW

MAGNEHELIC ZERO AS FOUND: 0.0
AFTER ADJUSTMENT: 0.0

CONDITION OF FILTER GASKETS (2): NEW
#HOURS OF USE(CHANGE WHEN WORN): 0

CONDITION OF BALL VALVE: NEW

LEAK CHECK PRIOR TO CALIBRATION: GOOD
LEAK CHECK PRIOR TO CALIBRATION: GOOD

SAMPLING WELL CLEANED: YES

NOTES ON THE PERFORMANCE AND CONDITON OF THE SAMPLER:

POLYURETHANE FOAM SAMPLER CALIBRATION SHEET

Form#: A101
Date: 10/1/88
Revision: 0

ENVIROSPHERE COMPANY
A DIVISION OF EBASCO SERVICES INCORPORATED
211 CONGRESS STREET
BOSTON, MASSACHUSETTES 02199

PROJECT: NEW BEDFORD HARBOR
SITE: BACKGROUND (BG-1)
DATE/TIME: 12/27/88
TECHNICIAN: HANSON

CALIB.UNIT NO.: 86C
CERTIFICATION DATE: 7/20/88
UNIT CALIBRATION CURVE:
M: 9.9599
b: -0.0804

PUF SAMPLER NO.: 6932
FLOW MEAS. DEVICE NO.: 83
MOTOR NO.: 0988-0480
FLOW CONTROLLER NO.: --
TIMER NO.: 0888-1284
ETI NO: 0988-1037

TEST POINT	AMB. TEMP. (K)	AMB. PRESS. (MM)	REFERENCE MANOMETER OR MAGNEHELIC (Y) INCHES OF WATER (OBS.)	REFERENCE MANOMETER OR MAGNEHELIC (Y) INCHES OF WATER (STD.)	REFERENCE MANOMETER OR MAGNEHELIC (Y) REFERENCE FLOW RATE (M3)	SAMPLER MAGNAHELIC (X) INCHES OF WATER (RESP.)	FLOW RATE BASED ON CAL. (M3)	ACCURACY OF CURVE PTS. (%)
1	271.93	770.89	6.40	2.668	0.276	60.0	0.279	1.01%
2	271.93	770.89	5.40	2.451	0.254	52.0	0.257	1.00%
3	271.93	770.89	4.40	2.212	0.230	41.0	0.226	-1.69%
4	271.93	770.89	3.40	1.945	0.203	30.0	0.196	-3.64%
5	271.93	770.89	2.20	1.564	0.165	21.0	0.171	3.60%
CLEAN FILTER	271.93	770.89	#####	#####	#####	46.0	0.240	0.06%

DATE OF LAST CALIB.: 10/14/88
DATE OF INT.CALIB.: 10/14/88

BAR. PRESS.(INCHES HG): 30.35
BAR. PRESS.(MM/HG): 770.89
TEMPERATURE (F): 29.8
TEMPERATURE (C): -1.2
TEMPERATURE (K): 271.94
STP CORRECTION FACTOR: 1.1121

CURRENT STANDARD FLOW CURVE = 12/27/88
(RESP - b)/M
b = -40.971
M = 362.247
MAGNEHELIC SET POINT = 46.0

LAST CALIBRATION FLOW CURVE = 10/14/88
b = -41.862
M = 371.255
MAGNEHELIC SET POINT = 47.2

DIFFERENCE BETWEEN FLOW CURVES = -2.69%

ETI READING: 70.5

MAINTENANCE RECORD
(COMPLETE DURING EVERY CALIBRATION)

CONDITION OF MOTOR: NEW

CONDITION OF MOTOR BRUSHES: NEW
#HOURS OF USE(CHANGE AFTER 900HRS): 0

CONDITON OF MOTOR GASKET: NEW

MAGNEHELIC ZERO AS FOUND: 0.0
AFTER ADJUSTMENT: 0.0

CONDITION OF FILTER GASKETS (2): NEW
#HOURS OF USE(CHANGE WHEN WORN): 0

CONDITION OF BALL VALVE: NEW

LEAK CHECK PRIOR TO CALIBRATION: GOOD
LEAK CHECK PRIOR TO CALIBRATION: GOOD

SAMPLING WELL CLEANED: YES

NOTES ON THE PERFORMANCE AND CONDITON OF THE SAMPLER:

POLYURETHANE FOAM SAMPLER CALIBRATION SHEET

Form#: A101
Date: 10/1/88
Revision: 0

ENVIROSPHERE COMPANY
A DIVISION OF EBASCO SERVICES INCORPORATED
211 CONGRESS STREET
BOSTON, MASSACHUSETTES 02199

PROJECT: NEW BEDFORD HARBOR
SITE: BACKGROUND (B6-1)
DATE/TIME: 1/27/89
TECHNICIAN: HANSON

CALIB.UNIT NO.: 86C
CERTIFICATION DATE: 7/20/88
UNIT CALIBRATION CURVE:
M: 9.9599
b: -0.0804

PUF SAMPLER NO.: 6932
FLOW MEAS. DEVICE NO.: 83
MOTOR NO.: 0988-0480
FLOW CONTROLLER NO.: --
TIMER NO.: 0888-1284
ETI NO: 0988-1037

TEST POINT	AMB. TEMP. (K)	AMB. PRESS. (MM)	REFERENCE MANOMETER OR MAGNEHELIC INCHES OF WATER (OBS.) (Y)	INCHES OF WATER (STD.)	REFERENCE FLOW RATE (M3) (X)	SAMPLER MAGNAHELIC INCHES OF WATER (RESP.)	FLOW RATE BASED ON CAL. (M3)	ACCURACY OF CURVE PTS. (%)
1	267.88	759.96	6.50	2.690	0.278	60.0	0.284	1.97%
2	267.88	759.96	5.55	2.485	0.258	50.0	0.255	-0.91%
3	267.88	759.96	4.40	2.213	0.230	40.0	0.227	-1.45%
4	267.88	759.96	3.40	1.945	0.203	30.0	0.199	-2.37%
5	267.88	759.96	2.20	1.565	0.165	20.0	0.170	3.05%
CLEAN FILTER	267.88	759.96	*****	*****	*****	44.6	0.240	0.06%

DATE OF LAST CALIB.: 12/27/89
DATE OF INT.CALIB.: 10/14/88

BAR. PRESS.(INCHES HG): 29.92
BAR. PRESS.(MM/HG): 759.97
TEMPERATURE (F): 22.5
TEMPERATURE (C): -5.3
TEMPERATURE (K): 267.88
STP CORRECTION FACTOR: 1.1130

CURRENT STANDARD FLOW CURVE = (RESP - b)/M
1/27/89
b = -40.046
M = 352.765
MAGNEHELIC SET POINT = 44.6

LAST CALIBRATION FLOW CURVE = b = -40.971
12/27/89
M = 362.247
MAGNEHELIC SET POINT = 46.0

DIFFERENCE BETWEEN FLOW CURVES = -2.94%

ETI READING: --

MAINTENANCE RECORD
(COMPLETE DURING EVERY CALIBRATION)

CONDITION OF MOTOR: GOOD

CONDITION OF MOTOR BRUSHES: GOOD
#HOURS OF USE(CHANGE AFTER 900HRS): 512

CONDITON OF MOTOR GASKET: GOOD

MAGNEHELIC ZERO AS FOUND: 0.0
AFTER ADJUSTMENT: 0.0

CONDITION OF FILTER GASKETS (2): GOOD
#HOURS OF USE(CHANGE WHEN WORN): 1551

CONDITION OF BALL VALVE: NEW

LEAK CHECK PRIOR TO CALIBRATION: GOOD
LEAK CHECK PRIOR TO CALIBRATION: GOOD

SAMPLING WELL CLEANED: YES

NOTES ON THE PERFORMANCE AND CONDITON OF THE SAMPLER:

POLYURETHANE FOAM SAMPLER CALIBRATION SHEET

Form#: A101
Date: 10/1/88
Revision: 0

ENVIROSPHERE COMPANY
A DIVISION OF EBASCO SERVICES INCORPORATED
211 CONGRESS STREET
BOSTON, MASSACHUSETTES 02199

PROJECT: NEW BEDFORD HARBOR
SITE: BACKGROUND (BG-1)
DATE/TIME: 3/31/89
TECHNICIAN: HANSON

CALIB.UNIT NO.: 86C
CERTIFICATION DATE: 7/20/88
UNIT CALIBRATION CURVE:
M: 9.9599
b: -0.0804

PUF SAMPLER NO.: 6932
FLOW MEAS. DEVICE NO.: 83
MOTOR NO.: 0988-0490
FLOW CONTROLLER NO.: --
TIMER NO.: 0888-1284
ETI NO: 0988-1037

TEST POINT	AMB. TEMP. (K)	AMB. PRESS. (MM)	REFERENCE MANOMETER OR MAGNEHELIC INCHES OF WATER (OBS.) (Y)	INCHES OF WATER (STD.)	REFERENCE FLOW RATE (M3)	SAMPLER MAGNAHELIC INCHES OF WATER (RESP.) (X)	FLOW RATE BASED ON CAL. (M3)	ACCURACY OF CURVE PTS. (%)
1	277.60	754.12	6.75	2.682	0.277	70.0	0.284	2.25%
2	277.60	754.12	6.15	2.560	0.265	60.0	0.261	-1.41%
3	277.60	754.12	5.10	2.331	0.242	50.0	0.239	-1.24%
4	277.60	754.12	4.20	2.116	0.220	40.0	0.217	-1.67%
5	277.60	754.12	3.10	1.818	0.191	30.0	0.195	2.15%
CLEAN FILTER	277.60	754.12	*****	*****	*****	50.4	0.249	0.02%

DATE OF LAST CALIB.: 1/27/89
DATE OF INT.CALIB.: 10/14/88

BAR. PRESS.(INCHES HG): 29.69
BAR. PRESS.(MM/HG): 754.13
TEMPERATURE (F): 40.0
TEMPERATURE (C): 4.4
TEMPERATURE (K): 277.60
STP CORRECTION FACTOR: 1.0657

CURRENT STANDARD FLOW CURVE = (RESP - b)/M
3/31/89
b = -57.553
M = 449.753
MAGNEHELIC SET POINT = 50.4

LAST CALIBRATION FLOW CURVE = b = -40.046
1/27/89
M = 352.765
MAGNEHELIC SET POINT = 44.6

DIFFERENCE BETWEEN FLOW CURVES = 12.93%

ETI READING: 17304

MAINTENANCE RECORD
(COMPLETE DURING EVERY CALIBRATION)

CONDITION OF MOTOR: GOOD

CONDITION OF MOTOR BRUSHES: CHANGED
#HOURS OF USE(CHANGE AFTER 900HRS): 512

CONDITON OF MOTOR GASKET: GOOD

MAGNEHELIC ZERO AS FOUND: 0.0
AFTER ADJUSTMENT: 0.0

CONDITION OF FILTER GASKETS (2): GOOD
#HOURS OF USE(CHANGE WHEN WORN): 1551

CONDITION OF BALL VALVE: NEW

LEAK CHECK PRIOR TO CALIBRATION: GOOD
LEAK CHECK PRIOR TO CALIBRATION: GOOD

SAMPLING WELL CLEANED: YES

NOTES ON THE PERFORMANCE AND CONDITON OF THE SAMPLER:

POLYURETHANE FOAM SAMPLER CALIBRATION SHEET

Form#: A101
Date: 10/1/88
Revision: 0

ENVIROSPHERE COMPANY
A DIVISION OF EBASCO SERVICES INCORPORATED
211 CONGRESS STREET
BOSTON, MASSACHUSETTES 02199

PROJECT: NEW BEDFORD HARBOR
SITE: BACKGROUND (BG-1)
DATE/TIME: 4/27/89
TECHNICIAN: HANSON

CALIB.UNIT NO.: 86C
CERTIFICATION DATE: 7/20/88
UNIT CALIBRATION CURVE:
M: 9.9599
b: -0.0804

PUF SAMPLER NO.: 6932
FLOW MEAS. DEVICE NO.: 83
MOTOR NO.: 0988-0480
FLOW CONTROLLER NO.: --
TIMER NO.: 0888-1284
ETI NO: 0988-1037

TEST POINT	AMB. TEMP. (K)	AMB. PRESS. (MM)	REFERENCE MANOMETER OR MAGNEHELIC (Y) INCHES OF WATER (OBS.)	INCHES OF WATER (STD.)	REFERENCE FLOW RATE (M3)	SAMPLER MAGNAHELIC (X) INCHES OF WATER (RESP.)	FLOW RATE BASED ON CAL. (M3)	ACCURACY OF CURVE PTS. (%)
1	285.38	757.42	7.30	2.757	0.285	70.0	0.288	1.94%
2	285.38	757.42	6.15	2.531	0.262	60.0	0.263	0.23%
3	285.38	757.42	5.15	2.316	0.241	50.0	0.239	-1.10%
4	285.38	757.42	4.20	2.091	0.218	40.0	0.213	-2.25%
5	285.38	757.42	2.95	1.753	0.184	30.0	0.188	2.32%
CLEAN FILTER	285.38	757.42	*****	*****	*****	50.8	0.240	0.03%

DATE OF LAST CALIB.: 3/31/89
DATE OF INT.CALIB.: 10/14/88

CURRENT STANDARD FLOW CURVE = 4/27/89
(RESP - b)/M
b = -45.908
M = 403.085
MAGNEHELIC SET POINT = 50.8

LAST CALIBRATION FLOW CURVE = 3/31/89
b = -57.553
M = 449.753
MAGNEHELIC SET POINT = 50.4

DIFFERENCE BETWEEN FLOW CURVES = 0.86%

BAR. PRESS.(INCHES HG): 29.82
BAR. PRESS.(MM/HG): 757.43
TEMPERATURE (F): 54.0
TEMPERATURE (C): 12.2
TEMPERATURE (K): 285.38
STP CORRECTION FACTOR: 1.0412

ETI READING: 39415

MAINTENANCE RECORD
(COMPLETE DURING EVERY CALIBRATION)

CONDITION OF MOTOR: GOOD
CONDITION OF MOTOR BRUSHES: GOOD
#HOURS OF USE(CHANGE AFTER 900HRS): 368
CONDITON OF MOTOR GASKET: GOOD
MAGNEHELIC ZERO AS FOUND: 0.0
AFTER ADJUSTMENT: 0.0
CONDITION OF FILTER GASKETS (2): GOOD
#HOURS OF USE(CHANGE WHEN WORN): 1919

CONDITION OF BALL VALVE: NEW
LEAK CHECK PRIOR TO CALIBRATION: GOOD
LEAK CHECK PRIOR TO CALIBRATION: GOOD
SAMPLING WELL CLEANED: YES

NOTES ON THE PERFORMANCE AND CONDITON OF THE SAMPLER:

HIGH VOLUME (HI-VOL) SAMPLERS

TABLE F-2

High Volume (HI-VOL) Sampler Calibration Summary

Site	Date	Calibration Slope	Calibration Intercept	Meter Set Point	Set Point Flow Rate	% Drift from Last Calibration
SOUTHWEST (PRIMARY)	10/30/88	16.968	10.652	30	1.130	—
	11/7/88	18.156	9.040	30	1.130	0.90%
	12/7/88	13.978	10.788	27	1.130	-10.06% *
	1/13/89	23.464	2.119	29	1.130	7.67%
	1/27/89	24.658	0.236	28	1.130	-1.87%
	3/31/89	11.661	11.399	25	1.130	-12.54% *
	4/27/89	15.187	7.282	25	1.130	-0.81%
SOUTHWEST (COLLOCATED)	10/30/88	29.697	-1.318	32	1.130	—
	11/7/88	32.945	-5.103	32	1.130	-0.35%
	12/7/88	27.193	-1.338	29	1.130	-8.51% *
	1/13/89	28.318	-3.139	29	1.130	-1.99%
	1/27/89	29.546	-5.271	28	1.130	-2.39%
	3/31/89	31.345	-4.207	31	1.130	11.02% *
	4/27/89	35.129	-7.071	32	1.130	4.48%

* Calibration/maintenance completed.

HIGH VOLUME SAMPLER CALIBRATION SHEET

Form#: A102
Date: 10/1/88
Revision: 0

ENVIROSPHERE COMPANY
A DIVISION OF EBASCO SERVICES INCORPORATED
211 CONGRESS STREET
BOSTON, MASSACHUSETTES 02199

PROJECT: NEW BEDFORD HARBOR
SITE: NEW BEDFORD HARBOR
DATE/TIME: 10/30/88
TECHNICIAN: HANSON

CALIB.UNIT NO.: C255
CERTIFICATION DATE: 10/19/88
UNIT CALIBRATION CURVE:
M: 1.9482
b: 0.0086

HV SAMPLER NO.: SW-1
FLOW MEAS. DEVICE NO.: --
MOTOR NO.: 17576
FLOW CONTROLLER NO.: F111
TIMER NO.: TIII
ETI NO: E111

DATE OF LAST CALIB.: --
DATE OF INT.CALIB.: 10/30/88

BAR. PRESS.(INCHES HG): 30.2
BAR. PRESS.(MM/HG): 767.08
TEMPERATURE (F): 40.0
TEMPERATURE (C): 4.4
TEMPERATURE (K): 277.60
STP CORRECTION FACTOR: 1.0841

ETI READING: 126.1

TEST POINT	AMB. TEMP. (K)	AMB. PRESS. (MM)	REFERENCE MANOMETER OR MAGNEHELIC INCHES OF WATER (OBS.)	REFERENCE FLOW RATE (STD M^3) (X)	REFERENCE FLOW RATE (ACT M^3) (X)	SAMPLER FLOW DEVICE METER RESPONSE (CFM) (Y)	FLOW RATE BASED ON CAL. (M3)	ACCURACY OF CURVE PTS. (%)
1	277.60	767.08	9.70	1.660	1.531	39.0	1.671	0.64%
2	277.60	767.08	7.60	1.469	1.355	36.0	1.494	1.70%
3	277.60	767.08	6.00	1.305	1.204	32.0	1.258	-3.57%
4	277.60	767.08	3.80	1.037	0.957	28.0	1.022	-1.45%
5	277.60	767.08	2.55	0.849	0.783	25.5	0.875	3.07%
CLEAN FILTER	277.60	767.08	*****	*****	*****	29.8	1.130	0.08%

STD CALIBRATION FLOW CURVE = (RESP - b)/M b = 10.652 FLOW METER
10/30/88 M = 16.948 SET POINT = 29.8
ACTUAL CALIBRATION FLOW CURVE = (RESP - b)/M b = 10.652
10/30/88 M = 18.395

LAST STD CALIBRATION FLOW CURVE = b = FLOW METER
-- M = SET POINT = 0.0

DIFFERENCE BETWEEN FLOW CURVES =

MAINTENANCE RECORD
(COMPLETE DURING EVERY CALIBRATION)

CONDITION OF MOTOR: NEW

CONDITION OF MOTOR BRUSHES: NEW
#HOURS OF USE(CHANGE AFTER 900HRS): 0

CONDITON OF MOTOR GASKET: NEW

FLOW METER ZERO AS FOUND: 0.0
AFTER ADJUSTMENT: 0.0

CONDITION OF FILTER GASKETS (2): NEW
#HOURS OF USE(CHANGE WHEN WORN): 0

CONDITION OF TUBING: NEW

LEAK CHECK PRIOR TO CALIBRATION: GOOD

SAMPLING WELL CLEANED: YES

NOTES ON THE PERFORMANCE AND CONDITON OF THE SAMPLER:

HIGH VOLUME SAMPLER CALIBRATION SHEET

Form#: A102
Date: 10/1/88
Revision: 0

ENVIROSPHERE COMPANY
A DIVISION OF EBASCO SERVICES INCORPORATED
211 CONGRESS STREET
BOSTON, MASSACHUSETTES 02199

PROJECT: NEW BEDFORD HARBOR
SITE: NEW BEDFORD HARBOR
DATE/TIME: 11/7/88
TECHNICIAN: HANSON

CALIB.UNIT NO.: C255
CERTIFICATION DATE: 10/19/88
UNIT CALIBRATION CURVE:
M: 1.9492
b: 0.0086

HV SAMPLER NO.: SW-1
FLOW MEAS. DEVICE NO.: --
MOTOR NO.: 17576
FLOW CONTROLLER NO.: F111
TIMER NO.: TIII
ETI NO: E111

DATE OF LAST CALIB.: 10/30/88
DATE OF INT.CALIB.: 10/30/88

BAR. PRESS.(INCHES HG): 30.2
BAR. PRESS.(MM/HG): 767.08
TEMPERATURE (F): 45.0
TEMPERATURE (C): 7.2
TEMPERATURE (K): 280.38
STP CORRECTION FACTOR: 1.0733

ETI READING: 218.7

TEST POINT	AMB. TEMP. (K)	AMB. PRESS. (MM)	INCHES OF WATER (OBS.)	REFERENCE FLOW RATE (STD M^3)	REFERENCE FLOW RATE (ACT M^3)	METER RESPONSE (CFM)	FLOW RATE BASED ON CAL. (M3)	ACCURACY OF CURVE PTS. (%)
			REFERENCE MANOMETER OR MAGNEHELIC X	X	X	SAMPLER FLOW DEVICE Y		
1	280.38	767.08	9.70	1.652	1.539	39.0	1.650	-0.10%
2	280.38	767.08	7.60	1.462	1.362	36.0	1.485	1.59%
3	280.38	767.08	5.00	1.298	1.209	32.0	1.265	-2.59%
4	280.38	767.08	3.80	1.032	0.962	28.0	1.044	1.17%
5	280.38	767.08	2.60	0.857	0.799	25.0	0.879	2.51%
CLEAN FILTER	280.38	767.08	*****	*****	*****	29.6	1.130	0.52%

STD CALIBRATION FLOW CURVE = (RESP - b)/M b = 9.040 FLOW METER
11/7/88 M = 18.156 SET POINT = 29.6
ACTUAL CALIBRATION FLOW CURVE = (RESP - b)/M b = 9.040
11/7/88 M = 19.488

LAST STD CALIBRATION FLOW CURVE = b = 10.652 FLOW METER
10/30/88 M = 16.968 SET POINT = 29.6

DIFFERENCE BETWEEN FLOW CURVES = -0.90%

MAINTENANCE RECORD
(COMPLETE DURING EVERY CALIBRATION)

CONDITION OF MOTOR: NEW

CONDITION OF MOTOR BRUSHES: NEW
#HOURS OF USE(CHANGE AFTER 900HRS): 0

CONDITON OF MOTOR BASKET: GOOD

FLOW METER ZERO AS FOUND: 0.0
AFTER ADJUSTMENT: 0.0

CONDITION OF FILTER BASKETS (2): GOOD
#HOURS OF USE(CHANGE WHEN WORN): 0

CONDITION OF TUBING: GOOD

LEAK CHECK PRIOR TO CALIBRATION: GOOD

SAMPLING WELL CLEANED: YES

NOTES ON THE PERFORMANCE AND CONDITON OF THE SAMPLER:

HIGH VOLUME SAMPLER CALIBRATION SHEET

Form#: A102
Date: 10/1/88
Revision: 0

ENVIROSPHERE COMPANY
A DIVISION OF EBASCO SERVICES INCORPORATED
211 CONGRESS STREET
BOSTON, MASSACHUSETTES 02199

PROJECT: NEW BEDFORD HARBOR
SITE: NEW BEDFORD HARBOR
DATE/TIME: 12/7/88
TECHNICIAN: HANSON

CALIB.UNIT NO.: C255
CERTIFICATION DATE: 10/19/88
UNIT CALIBRATION CURVE:
M: 1.9482
b: 0.0086

HV SAMPLER NO.: SW-1
FLOW MEAS. DEVICE NO.: --
MOTOR NO.: 17576
FLOW CONTROLLER NO.: F111
TIMER NO.: T111
ETI NO: E111

DATE OF LAST CALIB.: 11/7/88
DATE OF INT.CALIB.: 10/30/88

BAR. PRESS.(INCHES HG): 28.9
BAR. PRESS.(MM/HG): 734.06
TEMPERATURE (F): 52.0
TEMPERATURE (C): 11.1
TEMPERATURE (K): 284.27
STP CORRECTION FACTOR: 1.0131

ETI READING: 38803

TEST POINT	AMB. TEMP. (K)	AMB. PRESS. (MM)	REFERENCE MANOMETER OR MAGNEHELIC: INCHES OF WATER (OBS.)	REFERENCE FLOW RATE (STD M^3)	REFERENCE FLOW RATE (ACT M^3)	SAMPLER FLOW DEVICE: METER RESPONSE (CFM)	FLOW RATE BASED ON CAL. (M3)	ACCURACY OF CURVE PTS. (%)
1	284.27	734.06	9.60	1.596	1.576	33.0	1.589	-0.45%
2	284.27	734.06	7.00	1.362	1.345	30.0	1.375	0.88%
3	284.27	734.06	4.50	1.092	1.077	26.0	1.088	-0.29%
4	284.27	734.06	2.90	0.875	0.864	23.0	0.874	-0.19%
5	284.27	734.06						
CLEAN FILTER	284.27	734.06	#####	#####	#####	26.6	1.130	-0.01%

STD CALIBRATION FLOW CURVE = (RESP - b)/M b = 10.788 FLOW METER
12/7/86 M = 13.979 SET POINT = 26.6
ACTUAL CALIBRATION FLOW CURVE = (RESP - b)/M b = 10.788
12/7/88 M = 14.160

LAST STD CALIBRATION FLOW CURVE = b = 9.040 FLOW METER
11/7/88 M = 18.156 SET POINT = 29.6

DIFFERENCE BETWEEN FLOW CURVES = -10.06%

MAINTENANCE RECORD
(COMPLETE DURING EVERY CALIBRATION)

CONDITION OF MOTOR: 643 HRS

CONDITION OF MOTOR BRUSHES: CHANGED
#HOURS OF USE(CHANGE AFTER 900HRS): 643

CONDITON OF MOTOR GASKET: GOOD

FLOW METER ZERO AS FOUND: 0.0
AFTER ADJUSTMENT: 0.0

CONDITION OF FILTER GASKETS (2): GOOD
#HOURS OF USE(CHANGE WHEN WORN): 643

CONDITION OF TUBING: GOOD

LEAK CHECK PRIOR TO CALIBRATION: GOOD

SAMPLING WELL CLEANED: YES

NOTES ON THE PERFORMANCE AND CONDITON OF THE SAMPLER:

HIGH VOLUME SAMPLER CALIBRATION SHEET

Form#: A102
Date: 10/1/88
Revision: 0

ENVIROSPHERE COMPANY
A DIVISION OF EBASCO SERVICES INCORPORATED
211 CONGRESS STREET
BOSTON, MASSACHUSETTES 02199

PROJECT: NEW BEDFORD HARBOR
SITE: NEW BEDFORD HARBOR
DATE/TIME: 1/13/89
TECHNICIAN: HANSON

CALIB.UNIT NO.: C255
CERTIFICATION DATE: 10/19/88
UNIT CALIBRATION CURVE:
M: 1.9482
b: 0.0086

HV SAMPLER NO.: SW-1
FLOW MEAS. DEVICE NO.: --
MOTOR NO.: 17576
FLOW CONTROLLER NO.: F111
TIMER NO.: T111
ETI NO: E111

DATE OF LAST CALIB.: 12/7/89
DATE OF INT.CALIB.: 10/30/88

BAR. PRESS.(INCHES HG): 29.82
BAR. PRESS.(MM/HG): 757.43
TEMPERATURE (F): 35.6
TEMPERATURE (C): 2.0
TEMPERATURE (K): 275.16
STP CORRECTION FACTOR: 1.0799

ETI READING: --

TEST POINT	AMB. TEMP. (K)	AMB. PRESS. (MM)	REFERENCE MANOMETER OR MASNEHELIC: INCHES OF WATER (OBS.)	REFERENCE FLOW RATE (STD M^3)	REFERENCE FLOW RATE (ACT M^3)	SAMPLER FLOW DEVICE: METER RESPONSE (CFM)	FLOW RATE BASED ON CAL. (M3)	ACCURACY OF CURVE PTS. (%)
1	275.16	757.42	8.10	1.514	1.402	38.0	1.529	1.03%
2	275.16	757.42	5.20	1.212	1.122	30.0	1.188	-1.95%
3	275.16	757.42	3.40	0.979	0.907	25.0	0.975	-0.41%
4	275.16	757.42	2.00	0.750	0.694	20.0	0.762	1.62%
5	275.16	757.42						
CLEAN FILTER	275.16	757.42	#####	#####	#####	28.6	1.130	0.07%

STD CALIBRATION FLOW CURVE = (RESP - b)/M
1/13/89
b = 2.119
M = 23.464
FLOW METER SET POINT = 28.6

ACTUAL CALIBRATION FLOW CURVE = (RESP - b)/M
1/13/89
b = 2.119
M = 25.339

LAST STD CALIBRATION FLOW CURVE = b = 10.788
12/7/89 M = 13.987
FLOW METER SET POINT = 26.6

DIFFERENCE BETWEEN FLOW CURVES = 7.67%

MAINTENANCE RECORD
(COMPLETE DURING EVERY CALIBRATION)

CONDITION OF MOTOR: GOOD

CONDITION OF MOTOR BRUSHES: GOOD
#HOURS OF USE(CHANGE AFTER 900HRS): 232

CONDITON OF MOTOR GASKET: GOOD

FLOW METER ZERO AS FOUND: 0.0
AFTER ADJUSTMENT: 0.0

CONDITION OF FILTER GASKETS (2): GOOD
#HOURS OF USE(CHANGE WHEN WORN): 875

CONDITION OF TUBING: GOOD

LEAK CHECK PRIOR TO CALIBRATION: GOOD

SAMPLING WELL CLEANED: YES

NOTES ON THE PERFORMANCE AND CONDITON OF THE SAMPLER:

HIGH VOLUME SAMPLER CALIBRATION SHEET

Form#: A102
Date: 10/1/88
Revision: 0

ENVIROSPHERE COMPANY
A DIVISION OF EBASCO SERVICES INCORPORATED
211 CONGRESS STREET
BOSTON, MASSACHUSETTES 02199

PROJECT: NEW BEDFORD HARBOR
SITE: NEW BEDFORD HARBOR
DATE/TIME: 1/27/89
TECHNICIAN: HANSON

CALIB.UNIT NO.: C255
CERTIFICATION DATE: 10/19/88
UNIT CALIBRATION CURVE:
M: 1.9482
b: 0.0086

HV SAMPLER NO.: SW-1
FLOW MEAS. DEVICE NO.: --
MOTOR NO.: 17576
FLOW CONTROLLER NO.: F111
TIMER NO.: TIII
ETI NO: E111

DATE OF LAST CALIB.: 1/13/89
DATE OF INT.CALIB.: 10/30/88

BAR. PRESS.(INCHES HG): 29.92
BAR. PRESS.(MM/HG): 759.97
TEMPERATURE (F): 36.6
TEMPERATURE (C): 2.6
TEMPERATURE (K): 275.72
STP CORRECTION FACTOR: 1.0814

ETI READING: 68722

TEST POINT	AMB. TEMP. (K)	AMB. PRESS. (MM)	REFERENCE MANOMETER OR MAGNEHELIC: INCHES OF WATER (OBS.) (X)	REFERENCE: REFERENCE FLOW RATE (STD M^3) (X)	REFERENCE: REFERENCE FLOW RATE (ACT M^3) (X)	SAMPLER FLOW DEVICE: METER RESPONSE (CFM) (Y)	SAMPLER FLOW DEVICE: FLOW RATE BASED ON CAL. (M3)	ACCURACY OF CURVE PTS. (%)
1	275.71	759.96	8.20	1.524	1.409	38.0	1.532	0.49%
2	275.71	759.96	5.20	1.213	1.122	30.0	1.207	-0.47%
3	275.71	759.96	3.40	0.980	0.906	24.0	0.964	-1.64%
4	275.71	759.96	2.20	0.787	0.728	20.0	0.802	1.81%
5	275.71	759.96						
CLEAN								
FILTER	275.71	759.96	*****	*****	*****	28.1	1.130	0.05%

STD CALIBRATION FLOW CURVE = (RESP - b)/M
1/27/89
b = 0.236
M = 24.658
FLOW METER SET POINT = 28.1

ACTUAL CALIBRATION FLOW CURVE = (RESP - b)/M
1/27/89
b = 0.236
M = 26.664

LAST STD CALIBRATION FLOW CURVE = b = 2.119
1/13/89 M = 23.464
FLOW METER SET POINT = 28.6

DIFFERENCE BETWEEN FLOW CURVES = -1.87%

MAINTENANCE RECORD
(COMPLETE DURING EVERY CALIBRATION)

CONDITION OF MOTOR: GOOD

CONDITION OF MOTOR BRUSHES: GOOD
#HOURS OF USE(CHANGE AFTER 900HRS): 520

CONDITON OF MOTOR GASKET: GOOD

FLOW METER ZERO AS FOUND: 0.0
AFTER ADJUSTMENT: 0.0

CONDITION OF FILTER GASKETS (2): GOOD
#HOURS OF USE(CHANGE WHEN WORN): 1163

CONDITION OF TUBING: GOOD

LEAK CHECK PRIOR TO CALIBRATION: GOOD

SAMPLING WELL CLEANED: YES

NOTES ON THE PERFORMANCE AND CONDITON OF THE SAMPLER:

HIGH VOLUME SAMPLER CALIBRATION SHEET

Form#: A102
Date: 10/1/88
Revision: 0

ENVIROSPHERE COMPANY
A DIVISION OF EBASCO SERVICES INCORPORATED
211 CONGRESS STREET
BOSTON, MASSACHUSETTES 02199

PROJECT: NEW BEDFORD HARBOR
SITE: NEW BEDFORD HARBOR
DATE/TIME: 3/31/89
TECHNICIAN: HANSON

CALIB.UNIT NO.: C255
CERTIFICATION DATE: 10/19/88
UNIT CALIBRATION CURVE:
M: 1.9482
b: 0.0086

HV SAMPLER NO.: SW-1
FLOW MEAS. DEVICE NO.: --
MOTOR NO.: 17576
FLOW CONTROLLER NO.: F111
TIMER NO.: TIII
ETI NO: E111

DATE OF LAST CALIB.: 1/27/89
DATE OF INT.CALIB.: 10/30/88

BAR. PRESS.(INCHES HG): 29.69
BAR. PRESS.(MM/HG): 754.13
TEMPERATURE (F): 38.0
TEMPERATURE (C): 3.3
TEMPERATURE (K): 276.49
STP CORRECTION FACTOR: 1.0700

ETI READING: 67554

TEST POINT	AMB. TEMP. (K)	AMB. PRESS. (MM)	REFERENCE MANOMETER OR MAGNEHELIC: INCHES OF WATER (OBS.)	REFERENCE FLOW RATE (STD M^3) (X)	REFERENCE FLOW RATE (ACT M^3) (X)	SAMPLER FLOW DEVICE: METER RESPONSE (CFM) (Y)	FLOW RATE BASED ON CAL. (M3)	ACCURACY OF CURVE PTS. (%)
1	276.49	754.12	8.90	1.580	1.476	30.0	1.595	0.99%
2	276.49	754.12	6.60	1.360	1.271	27.0	1.338	-1.60%
3	276.49	754.12	4.20	1.084	1.013	24.0	1.081	-0.29%
4	276.49	754.12	2.90	0.900	0.841	22.0	0.909	1.04%
5	276.49	754.12						
CLEAN FILTER	276.49	754.12	*****	*****	*****	24.6	1.130	0.03%

STD CALIBRATION FLOW CURVE = (RESP - b)/M b = 11.399 M = 11.661 FLOW METER SET POINT = 24.6
3/31/89

ACTUAL CALIBRATION FLOW CURVE = (RESP - b)/M b = 11.399 M = 12.477
3/31/89

LAST STD CALIBRATION FLOW CURVE = b = 0.236 M = 24.658 FLOW METER SET POINT = 28.1
1/27/89

DIFFERENCE BETWEEN FLOW CURVES = -12.54%

MAINTENANCE RECORD
(COMPLETE DURING EVERY CALIBRATION)

CONDITION OF MOTOR: GOOD

CONDITION OF MOTOR BRUSHES: CHANGED
#HOURS OF USE(CHANGE AFTER 900HRS): 520

CONDITON OF MOTOR GASKET: GOOD

FLOW METER ZERO AS FOUND: 0.0
AFTER ADJUSTMENT: 0.0

CONDITION OF FILTER BASKETS (2): GOOD
#HOURS OF USE(CHANGE WHEN WORN): 1163

CONDITION OF TUBING: NEW

LEAK CHECK PRIOR TO CALIBRATION: GOOD

SAMPLING WELL CLEANED: YES

NOTES ON THE PERFORMANCE AND CONDITON OF THE SAMPLER:
REPLACED SILICONE SEAL AROUND MOTOR HOUSING _____

HIGH VOLUME SAMPLER CALIBRATION SHEET

Form#: A102
Date: 10/1/88
Revision: 0

ENVIROSPHERE COMPANY
A DIVISION OF EBASCO SERVICES INCORPORATED
211 CONGRESS STREET
BOSTON, MASSACHUSETTES 02199

PROJECT: NEW BEDFORD HARBOR
SITE: NEW BEDFORD HARBOR
DATE/TIME: 4/27/89
TECHNICIAN: HANSON

CALIB.UNIT NO.: C255
CERTIFICATION DATE: 10/19/88
UNIT CALIBRATION CURVE:
M: 1.9482
b: 0.0086

HV SAMPLER NO.: SW-1
FLOW MEAS. DEVICE NO.: --
MOTOR NO.: 17571
FLOW CONTROLLER NO.: F111
TIMER NO.: TI11
ETI NO: E111

DATE OF LAST CALIB.: 3/31/89
DATE OF INT.CALIB.: 10/30/88

BAR. PRESS.(INCHES HG): 28.82
BAR. PRESS.(MM/HG): 732.03
TEMPERATURE (F): 49.0
TEMPERATURE (C): 9.4
TEMPERATURE (K): 282.60
STP CORRECTION FACTOR: 1.0162

ETI READING: 90118

TEST POINT	AMB. TEMP. (K)	AMB. PRESS. (MM)	REFERENCE MANOMETER OR MAGNEHELIC: INCHES OF WATER (OBS.)	REFERENCE MANOMETER OR MAGNEHELIC: REFERENCE FLOW RATE (STD M^3) Y	REFERENCE MANOMETER OR MAGNEHELIC: REFERENCE FLOW RATE (ACT M^3) Y	SAMPLER FLOW DEVICE: METER RESPONSE (CFM) X	SAMPLER FLOW DEVICE: FLOW RATE BASED ON CAL. (M3)	ACCURACY OF CURVE PTS. (%)
1	282.60	732.02	8.30	1.486	1.463	30.5	1.529	2.86%
2	282.60	732.02	7.00	1.365	1.343	27.0	1.298	-4.86%
3	282.60	732.02	4.30	1.069	1.052	24.0	1.101	3.02%
4	282.60	732.02	2.70	0.846	0.832	20.0	0.837	-1.00%
5	282.60	732.02						
CLEAN FILTER	282.60	732.02	*****	*****	*****	24.4	1.130	0.01%

STD CALIBRATION FLOW CURVE = (RESP - b)/M b = 7.282 FLOW METER
4/27/89 M = 15.187 SET POINT = 24.4
ACTUAL CALIBRATION FLOW CURVE = (RESP - b)/M b = 7.282
4/27/89 M = 15.432
LAST STD CALIBRATION FLOW CURVE = b = 11.399 FLOW METER
3/31/89 M = 11.661 SET POINT = 24.6
DIFFERENCE BETWEEN FLOW CURVES = **-0.81%**

MAINTENANCE RECORD
(COMPLETE DURING EVERY CALIBRATION)

CONDITION OF MOTOR: GOOD

CONDITION OF MOTOR BRUSHES: GOOD
#HOURS OF USE(CHANGE AFTER 900HRS): 480

CONDITON OF MOTOR GASKET: GOOD

FLOW METER ZERO AS FOUND: 0.0
AFTER ADJUSTMENT: 0.0

CONDITION OF FILTER GASKETS (2): NEW
#HOURS OF USE(CHANGE WHEN WORN): 1643

CONDITION OF TUBING: NEW

LEAK CHECK PRIOR TO CALIBRATION: GOOD

SAMPLING WELL CLEANED: YES

NOTES ON THE PERFORMANCE AND CONDITON OF THE SAMPLER:

HIGH VOLUME SAMPLER CALIBRATION SHEET

Form#: A102
Date: 10/1/88
Revision: 0

ENVIROSPHERE COMPANY
A DIVISION OF EBASCO SERVICES INCORPORATED
211 CONGRESS STREET
BOSTON, MASSACHUSETTES 02199

PROJECT: NEW BEDFORD HARBOR
SITE: NEW BEDFORD HARBOR
DATE/TIME: 10/30/88
TECHNICIAN: HANSON

CALIB.UNIT NO.: C255
CERTIFICATION DATE: 10/19/86
UNIT CALIBRATION CURVE:
M: 1.9482
b: 0.0086

HV SAMPLER NO.: SW-C
FLOW MEAS. DEVICE NO.: --
MOTOR NO.: 17571
FLOW CONTROLLER NO.: F112
TIMER NO.: TI12
ETI NO: E112

DATE OF LAST CALIB.: --
DATE OF INT.CALIB.: 10/30/88

BAR. PRESS.(INCHES HG): 30.2
BAR. PRESS.(MM/HG): 767.08
TEMPERATURE (F): 42.0
TEMPERATURE (C): 5.6
TEMPERATURE (K): 278.72
STP CORRECTION FACTOR: 1.0797

ETI READING: 8804.5

TEST POINT	AMB. TEMP. (K)	AMB. PRESS. (MM)	REFERENCE MANOMETER OR MAGNEHELIC: INCHES OF WATER (OBS.) (Y)	REFERENCE FLOW RATE (STD M^3) (Y)	REFERENCE FLOW RATE (ACT M^3) (Y)	SAMPLER FLOW DEVICE: METER RESPONSE (CFM) (X)	FLOW RATE BASED ON CAL. (M3)	ACCURACY OF CURVE PTS. (%)
1	278.71	767.08	10.00	1.682	1.558	52.0	1.795	6.73%
2	278.71	767.08	7.90	1.495	1.384	42.0	1.459	-2.41%
3	278.71	767.08	5.00	1.188	1.100	32.0	1.122	-5.58%
4	278.71	767.08	3.30	0.964	0.893	27.0	0.954	-1.13%
5	278.71	767.08						
CLEAN FILTER	278.71	767.08	*****	*****	*****	32.2	1.130	-6.60%

STD CALIBRATION FLOW CURVE = (RESP - b)/M
10/30/88
b = -1.318
M = 29.697
FLOW METER SET POINT = 32.2

ACTUAL CALIBRATION FLOW CURVE = (RESP - b)/M
10/30/89
b = -7.460
M = 37.041

LAST STD CALIBRATION FLOW CURVE = b =
-- M =
FLOW METER SET POINT = 0.0

DIFFERENCE BETWEEN FLOW CURVES =

MAINTENANCE RECORD
(COMPLETE DURING EVERY CALIBRATION)

CONDITION OF MOTOR: NEW

CONDITION OF MOTOR BRUSHES: NEW
#HOURS OF USE(CHANGE AFTER 900HRS): 0

CONDITON OF MOTOR GASKET: NEW

FLOW METER ZERO AS FOUND: 0.0
AFTER ADJUSTMENT: 0.0

CONDITION OF FILTER GASKETS (2): NEW
#HOURS OF USE(CHANGE WHEN WORN): 0

CONDITION OF TUBING: NEW

LEAK CHECK PRIOR TO CALIBRATION: GOOD

SAMPLING WELL CLEANED: YES

NOTES ON THE PERFORMANCE AND CONDITON OF THE SAMPLER:

HIGH VOLUME SAMPLER CALIBRATION SHEET

Form#: A102
Date: 10/1/88
Revision: 0

ENVIROSPHERE COMPANY
A DIVISION OF EBASCO SERVICES INCORPORATED
211 CONGRESS STREET
BOSTON, MASSACHUSETTES 02199

PROJECT: NEW BEDFORD HARBOR
SITE: NEW BEDFORD HARBOR
DATE/TIME: 11/7/88
TECHNICIAN: HANSON

CALIB.UNIT NO.: C255
CERTIFICATION DATE: 10/19/88
UNIT CALIBRATION CURVE:
M: 1.9482
b: 0.0086

HV SAMPLER NO.: SW-C
FLOW MEAS. DEVICE NO.: --
MOTOR NO.: 17571
FLOW CONTROLLER NO.: F112
TIMER NO.: TII2
ETI NO: E112

DATE OF LAST CALIB.: 10/30/88
DATE OF INT.CALIB.: 10/30/88

BAR. PRESS.(INCHES HG): 30.2
BAR. PRESS.(MM/HG): 767.08
TEMPERATURE (F): 45.0
TEMPERATURE (C): 7.2
TEMPERATURE (K): 280.38
STP CORRECTION FACTOR: 1.0733

ETI READING: 8828.1

TEST POINT	AMB. TEMP. (K)	AMB. PRESS. (MM)	REFERENCE MANOMETER OR MAGNEHELIC: INCHES OF WATER (OBS.)	REFERENCE MANOMETER OR MAGNEHELIC: REFERENCE FLOW RATE (STD M^3)	REFERENCE MANOMETER OR MAGNEHELIC: REFERENCE FLOW RATE (ACT M^3)	SAMPLER FLOW DEVICE: METER RESPONSE (CFM)	SAMPLER FLOW DEVICE: FLOW RATE BASED ON CAL. (M3)	ACCURACY OF CURVE PTS. (%)
1	280.38	767.08	10.00	1.677	1.563	52.0	1.733	3.34%
2	280.38	767.08	7.80	1.481	1.380	42.0	1.430	-3.45%
3	280.38	767.08	5.00	1.185	1.104	32.0	1.126	-4.94%
4	280.38	767.08	3.20	0.951	0.886	28.0	1.005	5.62%
5	280.38	767.08						
CLEAN FILTER	280.38	767.08	*****	*****	*****	32.1	1.130	0.15%

STD CALIBRATION FLOW CURVE = (RESP - b)/M b = -5.103 FLOW METER
11/7/88 M = 32.945 SET POINT = 32.1
ACTUAL CALIBRATION FLOW CURVE = (RESP - b)/M b = -5.103
11/7/88 M = 35.361

LAST STD CALIBRATION FLOW CURVE = b = -1.318 FLOW METER
10/30/88 M = 29.697 SET POINT = 32.2

DIFFERENCE BETWEEN FLOW CURVES = -0.35%

MAINTENANCE RECORD
(COMPLETE DURING EVERY CALIBRATION)

CONDITION OF MOTOR: GOOD

CONDITION OF MOTOR BRUSHES: NEW
#HOURS OF USE(CHANGE AFTER 900HRS): 0

CONDITON OF MOTOR GASKET: GOOD

FLOW METER ZERO AS FOUND: 0.0
AFTER ADJUSTMENT: 0.0

CONDITION OF FILTER GASKETS (2): GOOD
#HOURS OF USE(CHANGE WHEN WORN): 0

CONDITION OF TUBING: GOOD

LEAK CHECK PRIOR TO CALIBRATION: GOOD

SAMPLING WELL CLEANED: YES

NOTES ON THE PERFORMANCE AND CONDITON OF THE SAMPLER:

HIGH VOLUME SAMPLER CALIBRATION SHEET

Form#: A102
Date: 10/1/88
Revision: 0

ENVIROSPHERE COMPANY
A DIVISION OF EBASCO SERVICES INCORPORATED
211 CONGRESS STREET
BOSTON, MASSACHUSETTES 02199

PROJECT: NEW BEDFORD HARBOR
SITE: NEW BEDFORD HARBOR
DATE/TIME: 12/7/88
TECHNICIAN: HANSON

CALIB.UNIT NO.: C255
CERTIFICATION DATE: 10/19/88
UNIT CALIBRATION CURVE:
M: 1.9482
b: 0.0086

HV SAMPLER NO.: SW-C
FLOW MEAS. DEVICE NO.: --
MOTOR NO.: 17571
FLOW CONTROLLER NO.: F112
TIMER NO.: T112
ETI NO: E112

DATE OF LAST CALIB.: 11/7/88
DATE OF INT.CALIB.: 10/30/88

BAR. PRESS.(INCHES HG): 29.98
BAR. PRESS.(MM/HG): 761.49
TEMPERATURE (F): 52.0
TEMPERATURE (C): 11.1
TEMPERATURE (K): 284.27
STP CORRECTION FACTOR: 1.0509

TEST POINT	AMB. TEMP. (K)	AMB. PRESS. (MM)	REFERENCE MANOMETER OR MAGNEHELIC: INCHES OF WATER (OBS.) (Y)	REFERENCE: REFERENCE FLOW RATE (STD M^3) (Y)	REFERENCE: REFERENCE FLOW RATE (ACT M^3) (Y)	SAMPLER FLOW DEVICE: METER RESPONSE (CFM) (X)	SAMPLER FLOW DEVICE: FLOW RATE BASED ON CAL. (M3) (X)	ACCURACY OF CURVE PTS. (%)
1	284.27	761.49	3.50	0.980	0.933	26.0	1.005	2.58%
2	284.27	761.49	5.20	1.196	1.138	30.0	1.152	-3.60%
3	284.27	761.49	8.20	1.502	1.430	40.0	1.520	1.18%
4	284.27	761.49						
5	284.27	761.49						
CLEAN FILTER	284.27	761.49	*****	*****	*****	29.4	1.130	0.05%

STD CALIBRATION FLOW CURVE = (RESP - b)/M b = -1.338 FLOW METER
12/7/88 M = 27.193 SET POINT = 29.4
ACTUAL CALIBRATION FLOW CURVE = (RESP - b)/M b = -1.338
12/7/88 M = 28.578

LAST STD CALIBRATION FLOW CURVE = b = -5.103 FLOW METER
11/7/88 M = 32.945 SET POINT = 32.1

DIFFERENCE BETWEEN FLOW CURVES = -8.51%

ETI READING: 47303

MAINTENANCE RECORD
(COMPLETE DURING EVERY CALIBRATION)

CONDITION OF MOTOR: GOOD

CONDITION OF MOTOR BRUSHES: CHANGED
#HOURS OF USE(CHANGE AFTER 900HRS): 643

CONDITON OF MOTOR GASKET: GOOD

FLOW METER ZERO AS FOUND: 0.0
AFTER ADJUSTMENT: 0.0

CONDITION OF FILTER GASKETS (2): GOOD
#HOURS OF USE(CHANGE WHEN WORN): 643

CONDITION OF TUBING: GOOD

LEAK CHECK PRIOR TO CALIBRATION: GOOD

SAMPLING WELL CLEANED: YES

NOTES ON THE PERFORMANCE AND CONDITON OF THE SAMPLER:

HIGH VOLUME SAMPLER CALIBRATION SHEET

Form#: A102
Date: 10/1/88
Revision: 0

ENVIROSPHERE COMPANY
A DIVISION OF EBASCO SERVICES INCORPORATED
211 CONGRESS STREET
BOSTON, MASSACHUSETTES 02199

PROJECT: NEW BEDFORD HARBOR
SITE: NEW BEDFORD HARBOR
DATE/TIME: 1/13/89
TECHNICIAN: HANSON

CALIB.UNIT NO.: C255
CERTIFICATION DATE: 10/19/88
UNIT CALIBRATION CURVE:
M: 1.9482
b: 0.0086

HV SAMPLER NO.: SW-C
FLOW MEAS. DEVICE NO.: --
MOTOR NO.: 17571
FLOW CONTROLLER NO.: F112
TIMER NO.: TII2
ETI NO: E112

DATE OF LAST CALIB.: 12/7/89
DATE OF INT.CALIB.: 10/30/88

BAR. PRESS.(INCHES HG): 29.82
BAR. PRESS.(MM/HG): 757.43
TEMPERATURE (F): 35.6
TEMPERATURE (C): 2.0
TEMPERATURE (K): 275.16
STP CORRECTION FACTOR: 1.0799

ETI READING: --

TEST POINT	AMB. TEMP. (K)	AMB. PRESS. (MM)	REFERENCE MANOMETER OR MAGNEHELIC: INCHES OF WATER (OBS.)	REFERENCE FLOW RATE (STD M^3) (Y)	REFERENCE FLOW RATE (ACT M^3) (Y)	SAMPLER FLOW DEVICE: METER RESPONSE (CFM) (X)	FLOW RATE BASED ON CAL. (M3)	ACCURACY OF CURVE PTS. (%)
1	275.16	757.42	8.10	1.514	1.402	40.0	1.525	0.77%
2	275.16	757.42	5.10	1.200	1.111	30.0	1.172	-2.34%
3	275.16	757.42	3.40	0.979	0.907	25.0	0.996	1.68%
4	275.16	757.42						
5	275.16	757.42						
CLEAN FILTER	275.16	757.42	*****	*****	*****	28.8	1.130	0.04%

STD CALIBRATION FLOW CURVE = (RESP - b)/M b = -3.193 M = 28.318 FLOW METER SET POINT = 28.8
1/13/89
ACTUAL CALIBRATION FLOW CURVE = (RESP - b)/M b = -3.193 M = 30.581
1/13/89
LAST STD CALIBRATION FLOW CURVE = b = -1.338 M = 27.193 FLOW METER SET POINT = 29.4
12/7/89
DIFFERENCE BETWEEN FLOW CURVES = -1.99%

MAINTENANCE RECORD
(COMPLETE DURING EVERY CALIBRATION)

CONDITION OF MOTOR: GOOD

CONDITION OF MOTOR BRUSHES: GOOD
#HOURS OF USE(CHANGE AFTER 900HRS): 232

CONDITON OF MOTOR GASKET: GOOD

FLOW METER ZERO AS FOUND: 0.0
AFTER ADJUSTMENT: 0.0

CONDITION OF FILTER GASKETS (2): GOOD
#HOURS OF USE(CHANGE WHEN WORN): 875

CONDITION OF TUBING: GOOD

LEAK CHECK PRIOR TO CALIBRATION: GOOD

SAMPLING WELL CLEANED: YES

NOTES ON THE PERFORMANCE AND CONDITON OF THE SAMPLER:

HIGH VOLUME SAMPLER CALIBRATION SHEET

Form#: A102
Date: 10/1/88
Revision: 0

ENVIROSPHERE COMPANY
A DIVISION OF EBASCO SERVICES INCORPORATED
211 CONGRESS STREET
BOSTON, MASSACHUSETTES 02199

PROJECT: NEW BEDFORD HARBOR
SITE: NEW BEDFORD HARBOR
DATE/TIME: 1/27/89
TECHNICIAN: HANSON

CALIB.UNIT NO.: C255
CERTIFICATION DATE: 10/19/88
UNIT CALIBRATION CURVE:
M: 1.9482
b: 0.0086

HV SAMPLER NO.: SW-C
FLOW MEAS. DEVICE NO.: --
MOTOR NO.: 17571
FLOW CONTROLLER NO.: F112
TIMER NO.: TI12
ETI NO: E112

DATE OF LAST CALIB.: 1/13/89
DATE OF INT.CALIB.: 10/30/88

BAR. PRESS.(INCHES HG): 29.92
BAR. PRESS.(MM/HG): 759.97
TEMPERATURE (F): 36.6
TEMPERATURE (C): 2.6
TEMPERATURE (K): 275.72
STP CORRECTION FACTOR: 1.0814

ETI READING: 75912.3

TEST POINT	AMB. TEMP. (K)	AMB. PRESS. (MM)	INCHES OF WATER (OBS.)	REFERENCE FLOW RATE (STD M^3)	REFERENCE FLOW RATE (ACT M^3)	METER RESPONSE (CFM)	FLOW RATE BASED ON CAL. (M3)	ACCURACY OF CURVE PTS. (%)
			Y	Y	Y	X	X	
1	275.71	759.96	8.20	1.524	1.409	40.0	1.532	0.53%
2	275.71	759.96	5.20	1.213	1.122	30.0	1.194	-1.57%
3	275.71	759.96	3.40	0.980	0.906	24.0	0.991	1.11%
4	275.71	759.96						
5	275.71	759.96						
CLEAN FILTER	275.71	759.96	#####	#####	#####	28.1	1.130	0.03%

STD CALIBRATION FLOW CURVE = (RESP - b)/M b = -5.271 FLOW METER
1/27/89 M = 29.546 SET POINT = 28.1
ACTUAL CALIBRATION FLOW CURVE = (RESP - b)/M b = -5.271
1/27/89 M = 31.950

LAST STD CALIBRATION FLOW CURVE = b = -3.193 FLOW METER
1/13/89 M = 28.318 SET POINT = 28.8

DIFFERENCE BETWEEN FLOW CURVES = -2.39%

MAINTENANCE RECORD
(COMPLETE DURING EVERY CALIBRATION)

CONDITION OF MOTOR: GOOD

CONDITION OF MOTOR BRUSHES: CHANGED
#HOURS OF USE(CHANGE AFTER 900HRS): 520

CONDITON OF MOTOR GASKET: GOOD

FLOW METER ZERO AS FOUND: 0.0
AFTER ADJUSTMENT: 0.0

CONDITION OF FILTER GASKETS (2): GOOD
#HOURS OF USE(CHANGE WHEN WORN): 1163

CONDITION OF TUBING: GOOD

LEAK CHECK PRIOR TO CALIBRATION: GOOD

SAMPLING WELL CLEANED: YES

NOTES ON THE PERFORMANCE AND CONDITON OF THE SAMPLER:

HIGH VOLUME SAMPLER CALIBRATION SHEET

Form#: A102
Date: 10/1/88
Revision: 0

ENVIROSPHERE COMPANY
A DIVISION OF EBASCO SERVICES INCORPORATED
211 CONGRESS STREET
BOSTON, MASSACHUSETTES 02199

PROJECT: NEW BEDFORD HARBOR
SITE: NEW BEDFORD HARBOR
DATE/TIME: 3/31/89
TECHNICIAN: HANSON

CALIB.UNIT NO.: C255
CERTIFICATION DATE: 10/19/88
UNIT CALIBRATION CURVE:
M: 1.9482
b: 0.0086

HV SAMPLER NO.: SW-C
FLOW MEAS. DEVICE NO.: --
MOTOR NO.: 17571
FLOW CONTROLLER NO.: F112
TIMER NO.: TII2
ETI NO: E112

DATE OF LAST CALIB.: 1/27/89
DATE OF INT.CALIB.: 10/30/88

BAR. PRESS.(INCHES HG): 29.69
BAR. PRESS.(MM/HG): 754.13
TEMPERATURE (F): 37.5
TEMPERATURE (C): 3.1
TEMPERATURE (K): 276.22
STP CORRECTION FACTOR: 1.0711

TEST POINT	AMB. TEMP. (K)	AMB. PRESS. (MM)	REFERENCE MANOMETER OR MAGNEHELIC: INCHES OF WATER (OBS.)	REFERENCE FLOW RATE (STD M^3) (Y)	REFERENCE FLOW RATE (ACT M^3) (Y)	SAMPLER FLOW DEVICE: METER RESPONSE (CFM) (X)	FLOW RATE BASED ON CAL. (M3)	ACCURACY OF CURVE PTS. (%)
1	276.21	754.12	8.70	1.562	1.459	45.0	1.570	0.47%
2	276.21	754.12	6.30	1.329	1.241	37.0	1.315	-1.08%
3	276.21	754.12	4.20	1.084	1.012	30.0	1.091	0.65%
4	276.21	754.12	2.70	0.868	0.811	25.0	0.932	7.29%
5	276.21	754.12						
CLEAN FILTER	276.21	754.12	*****	*****	*****	31.2	1.130	1.83%

STD CALIBRATION FLOW CURVE = (RESP - b)/M b = -4.207 FLOW METER
3/31/89 M = 31.345 SET POINT = 31.2
ACTUAL CALIBRATION FLOW CURVE = (RESP - b)/M b = -4.207
3/31/89 M = 33.574
LAST STD CALIBRATION FLOW CURVE = b = -5.271 FLOW METER
1/27/89 M = 29.546 SET POINT = 28.1
DIFFERENCE BETWEEN FLOW CURVES = 11.02%

ETI READING: 75956.7

MAINTENANCE RECORD
(COMPLETE DURING EVERY CALIBRATION)

CONDITION OF MOTOR: GOOD

CONDITION OF MOTOR BRUSHES: CHANGED
#HOURS OF USE(CHANGE AFTER 900HRS): 520

CONDITON OF MOTOR GASKET: GOOD

FLOW METER ZERO AS FOUND: 0.0
AFTER ADJUSTMENT: 0.0

CONDITION OF FILTER GASKETS (2): GOOD
#HOURS OF USE(CHANGE WHEN WORN): 1163

CONDITION OF TUBING: GOOD

LEAK CHECK PRIOR TO CALIBRATION: GOOD

SAMPLING WELL CLEANED: YES

NOTES ON THE PERFORMANCE AND CONDITON OF THE SAMPLER:
REPLACED SILICONE AROUND MOTOR COMPARTMENT.

HIGH VOLUME SAMPLER CALIBRATION SHEET

Form#: 4102
Date: 10/1/85
Revision: 0

ENVIROSPHERE COMPANY
A DIVISION OF EBASCO SERVICES INCORPORATED
211 CONGRESS STREET
BOSTON, MASSACHUSETTES 02199

PROJECT: NEW BEDFORD HARBOR
SITE: NEW BEDFORD HARBOR
DATE/TIME: 4/27/89
TECHNICIAN: HANSON

CALIB.UNIT NO.: C255
CERTIFICATION DATE: 10/19/88
UNIT CALIBRATION CURVE:
M: 1.9482
b: 0.0086

HV SAMPLER NO.: SW-C
FLOW MEAS. DEVICE NO.: --
MOTOR NO.: 17571
FLOW CONTROLLER NO.: F112
TIMER NO.: TI12
ETI NO: E112

DATE OF LAST CALIB.: 3/31/89
DATE OF INT.CALIB.: 10/30/88

BAR. PRESS.(INCHES HG): 28.82
BAR. PRESS.(MM/HG): 732.03
TEMPERATURE (F): 49.0
TEMPERATURE (C): 9.4
TEMPERATURE (K): 282.60
STP CORRECTION FACTOR: 1.0162

ETI READING: 90118

TEST POINT	AMB. TEMP. (K)	AMB. PRESS. (MM)	REFERENCE MANOMETER OR MAGNEHELIC: INCHES OF WATER (OBS.)	REFERENCE MANOMETER OR MAGNEHELIC: REFERENCE FLOW RATE (STD M^3) (Y)	REFERENCE MANOMETER OR MAGNEHELIC: REFERENCE FLOW RATE (ACT M^3) (Y)	SAMPLER FLOW DEVICE: METER RESPONSE (CFM) (X)	SAMPLER FLOW DEVICE: FLOW RATE BASED ON CAL. (M3)	ACCURACY OF CURVE PTS. (%)
1	282.60	732.02	9.00	1.548	1.523	49.0	1.556	3.12%
2	282.60	732.02	7.10	1.374	1.352	39.5	1.326	-3.54%
3	282.60	732.02	4.60	1.105	1.088	30.5	1.070	-3.24%
4	282.60	732.02	2.90	0.877	0.863	25.0	0.913	4.13%
5	282.60	732.02						
CLEAN FILTER	282.60	732.02	*****	*****	*****	32.6	1.130	6.12%

STD CALIBRATION FLOW CURVE = (RESP - b)/M
4/27/89
b = -7.071
M = 35.129
FLOW METER SET POINT = 32.6

ACTUAL CALIBRATION FLOW CURVE = (RESP - b)/M
4/27/89
b = -7.071
M = 35.698

LAST STD CALIBRATION FLOW CURVE = b = -4.207
3/31/89 M = 31.345
FLOW METER SET POINT = 31.2

DIFFERENCE BETWEEN FLOW CURVES = 4.49%

MAINTENANCE RECORD
(COMPLETE DURING EVERY CALIBRATION)

CONDITION OF MOTOR: GOOD

CONDITION OF MOTOR BRUSHES: GOOD
#HOURS OF USE(CHANGE AFTER 900HRS): 480

CONDITON OF MOTOR GASKET: GOOD

FLOW METER ZERO AS FOUND: 0.0
AFTER ADJUSTMENT: 0.0

CONDITION OF FILTER GASKETS (2): NEW
#HOURS OF USE(CHANGE WHEN WORN): 1643

CONDITION OF TUBING: NEW

LEAK CHECK PRIOR TO CALIBRATION: GOOD

SAMPLING WELL CLEANED: YES

NOTES ON THE PERFORMANCE AND CONDITON OF THE SAMPLER:

APPENDIX G

DAILY WIND ROSE/
FREQUENCY DISTRIBUTION

NEW BEDFORD HARBOR
24-HOUR WIND ROSE
START DATE: 15 NOVEMBER 1989
START HOUR: 0900

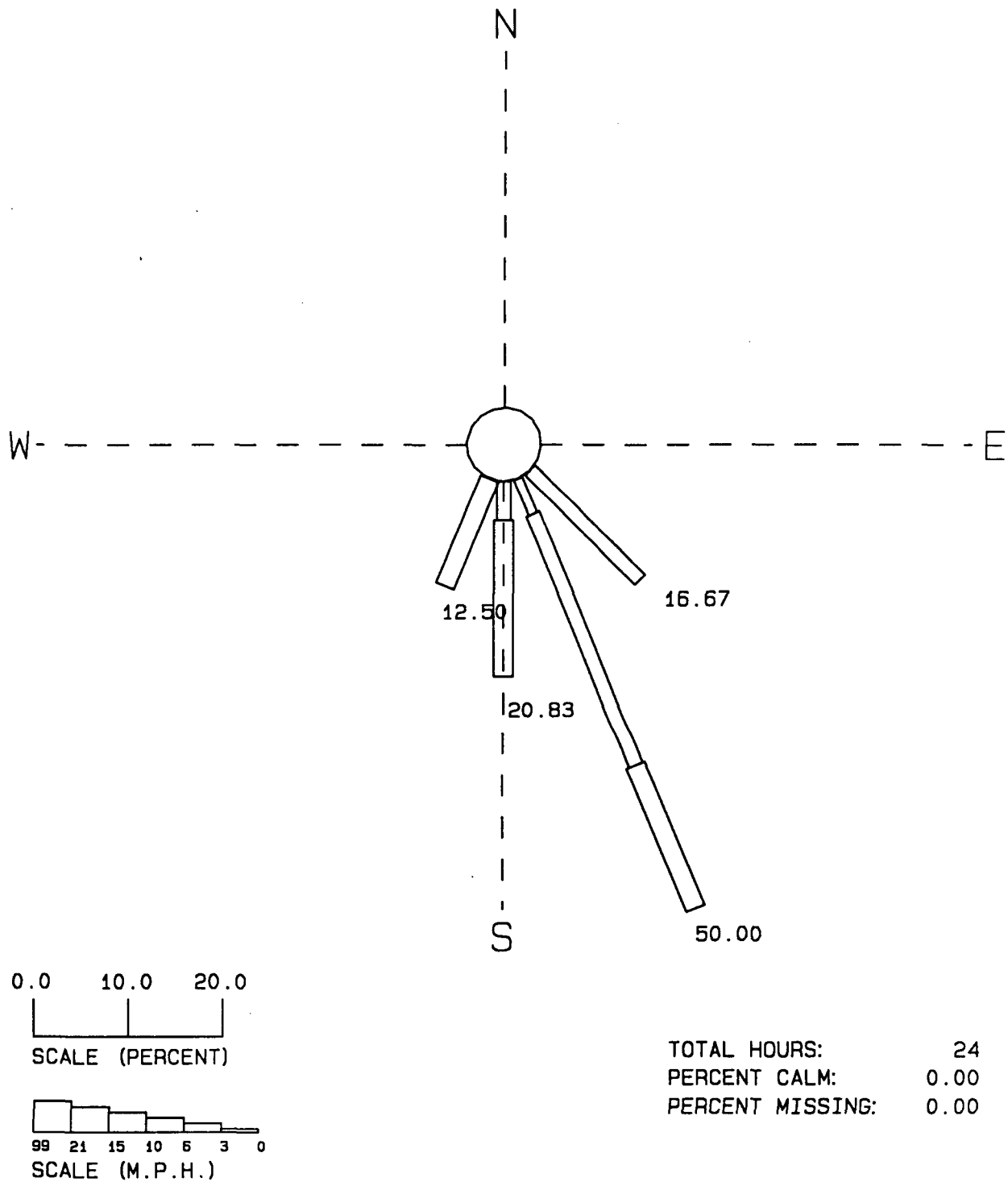

TOTAL HOURS:	24
PERCENT CALM:	0.00
PERCENT MISSING:	0.00

NEW BEDFORD HARBOR
24-HOUR WIND ROSE
START DATE: NOVEMBER 15,1989
START HOUR: 0900

TOTAL HOURS - 24
PERCENT CALM - .00
PERCENT MISSING - .00

WIND DIRECTION	WIND SPEED CATAGORY (MPH) < 3	3 - 6	6 -10	10-15	15 - 21	> 21	TOTAL
N	.000	.000	.000	.000	.000	.000	.000
NNE	.000	.000	.000	.000	.000	.000	.000
NE	.000	.000	.000	.000	.000	.000	.000
ENE	.000	.000	.000	.000	.000	.000	.000
E	.000	.000	.000	.000	.000	.000	.000
ESE	.000	.000	.000	.000	.000	.000	.000
SE	.000	.000	16.667	.000	.000	.000	16.667
SSE	.000	4.167	29.167	16.667	.000	.000	50.000
S	.000	.000	4.167	16.667	.000	.000	20.833
SSW	.000	.000	.000	12.500	.000	.000	12.500
SW	.000	.000	.000	.000	.000	.000	.000
WSW	.000	.000	.000	.000	.000	.000	.000
W	.000	.000	.000	.000	.000	.000	.000
WNW	.000	.000	.000	.000	.000	.000	.000
NW	.000	.000	.000	.000	.000	.000	.000
NNW	.000	.000	.000	.000	.000	.000	.000
ALL	.000	4.167	50.000	45.833	.000	.000	100.000

NEW BEDFORD HARBOR
24-HOUR WIND ROSE
START DATE: 17 NOVEMBER 1989
START HOUR: 0900

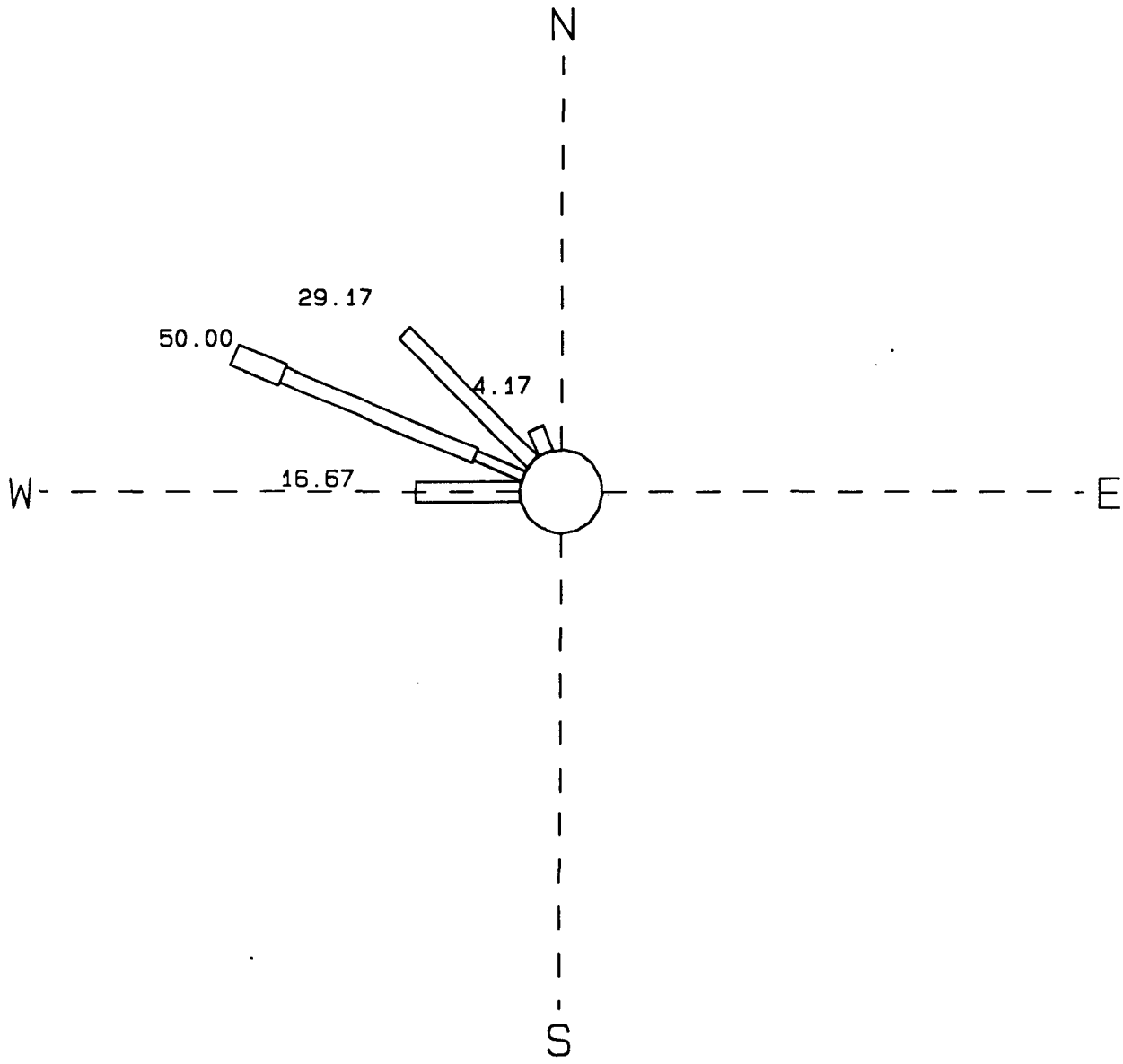

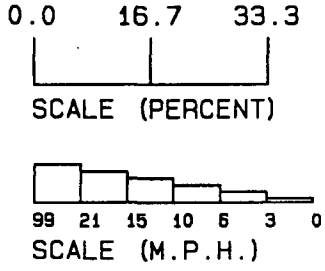

TOTAL HOURS:	24
PERCENT CALM:	0.00
PERCENT MISSING:	0.00

NEW BEDFORD HARBOR
24-HOUR WIND ROSE
START DATE: NOVEMBER 17,1989
START HOUR: 0900

TOTAL HOURS - 24
PERCENT CALM - .00
PERCENT MISSING - .00

WIND DIRECTION	WIND SPEED CATAGORY (MPH) < 3	3 - 6	6 -10	10-15	15 - 21	> 21	TOTAL
N	.000	.000	.000	.000	.000	.000	.000
NNE	.000	.000	.000	.000	.000	.000	.000
NE	.000	.000	.000	.000	.000	.000	.000
ENE	.000	.000	.000	.000	.000	.000	.000
E	.000	.000	.000	.000	.000	.000	.000
ESE	.000	.000	.000	.000	.000	.000	.000
SE	.000	.000	.000	.000	.000	.000	.000
SSE	.000	.000	.000	.000	.000	.000	.000
S	.000	.000	.000	.000	.000	.000	.000
SSW	.000	.000	.000	.000	.000	.000	.000
SW	.000	.000	.000	.000	.000	.000	.000
WSW	.000	.000	.000	.000	.000	.000	.000
W	.000	.000	.000	16.667	.000	.000	16.667
WNW	.000	8.333	33.333	8.333	.000	.000	50.000
NW	.000	.000	29.167	.000	.000	.000	29.167
NNW	.000	.000	4.167	.000	.000	.000	4.167
ALL	.000	8.333	66.667	25.000	.000	.000	100.000

NEW BEDFORD HARBOR
24-HOUR WIND ROSE
START DATE: 18 NOVEMBER 1989
START HOUR: 0900

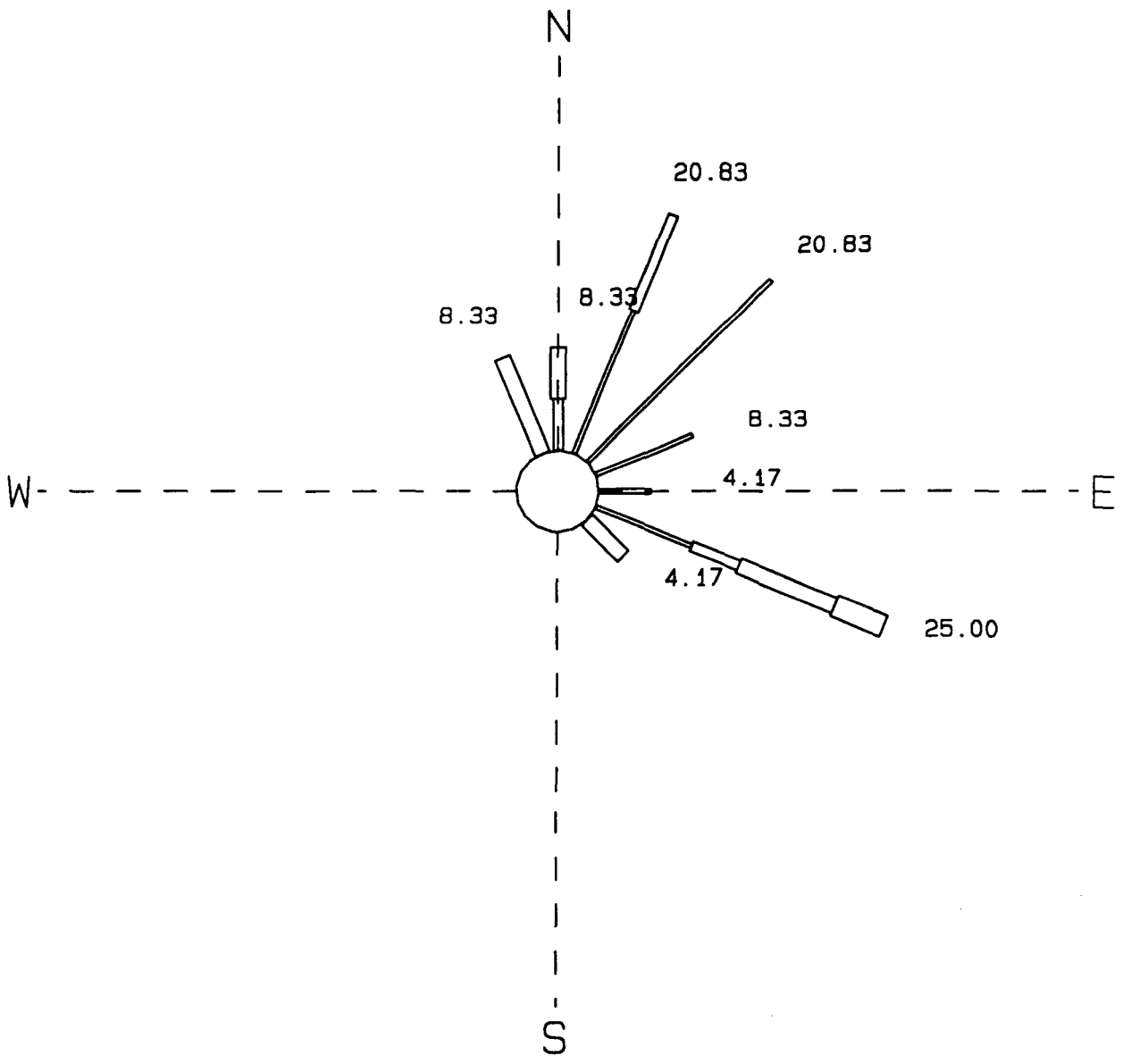

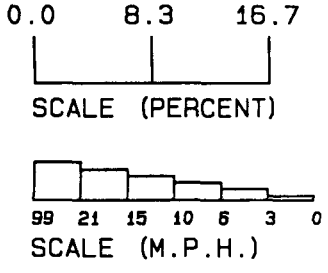

TOTAL HOURS:	24
PERCENT CALM:	0.00
PERCENT MISSING:	0.00

NEW BEDFORD HARBOR
24-HOUR WIND ROSE
START DATE: NOVEMBER 18,1989
START HOUR: 0900

TOTAL HOURS - 24
PERCENT CALM - .00
PERCENT MISSING - .00

WIND DIRECTION	WIND SPEED CATAGORY (MPH) < 3	3 - 6	6 -10	10-15	15 - 21	> 21	TOTAL
N	.000	4.167	4.167	.000	.000	.000	8.333
NNE	12.500	8.333	.000	.000	.000	.000	20.833
NE	20.833	.000	.000	.000	.000	.000	20.833
ENE	8.333	.000	.000	.000	.000	.000	8.333
E	4.167	.000	.000	.000	.000	.000	4.167
ESE	8.333	4.167	8.333	4.167	.000	.000	25.000
SE	.000	.000	4.167	.000	.000	.000	4.167
SSE	.000	.000	.000	.000	.000	.000	.000
S	.000	.000	.000	.000	.000	.000	.000
SSW	.000	.000	.000	.000	.000	.000	.000
SW	.000	.000	.000	.000	.000	.000	.000
WSW	.000	.000	.000	.000	.000	.000	.000
W	.000	.000	.000	.000	.000	.000	.000
WNW	.000	.000	.000	.000	.000	.000	.000
NW	.000	.000	.000	.000	.000	.000	.000
NNW	.000	.000	8.333	.000	.000	.000	8.333
ALL	54.167	16.667	25.000	4.167	.000	.000	100.000

NEW BEDFORD HARBOR
24-HOUR WIND ROSE
START DATE: 21 NOVEMBER 1989
START HOUR: 0900

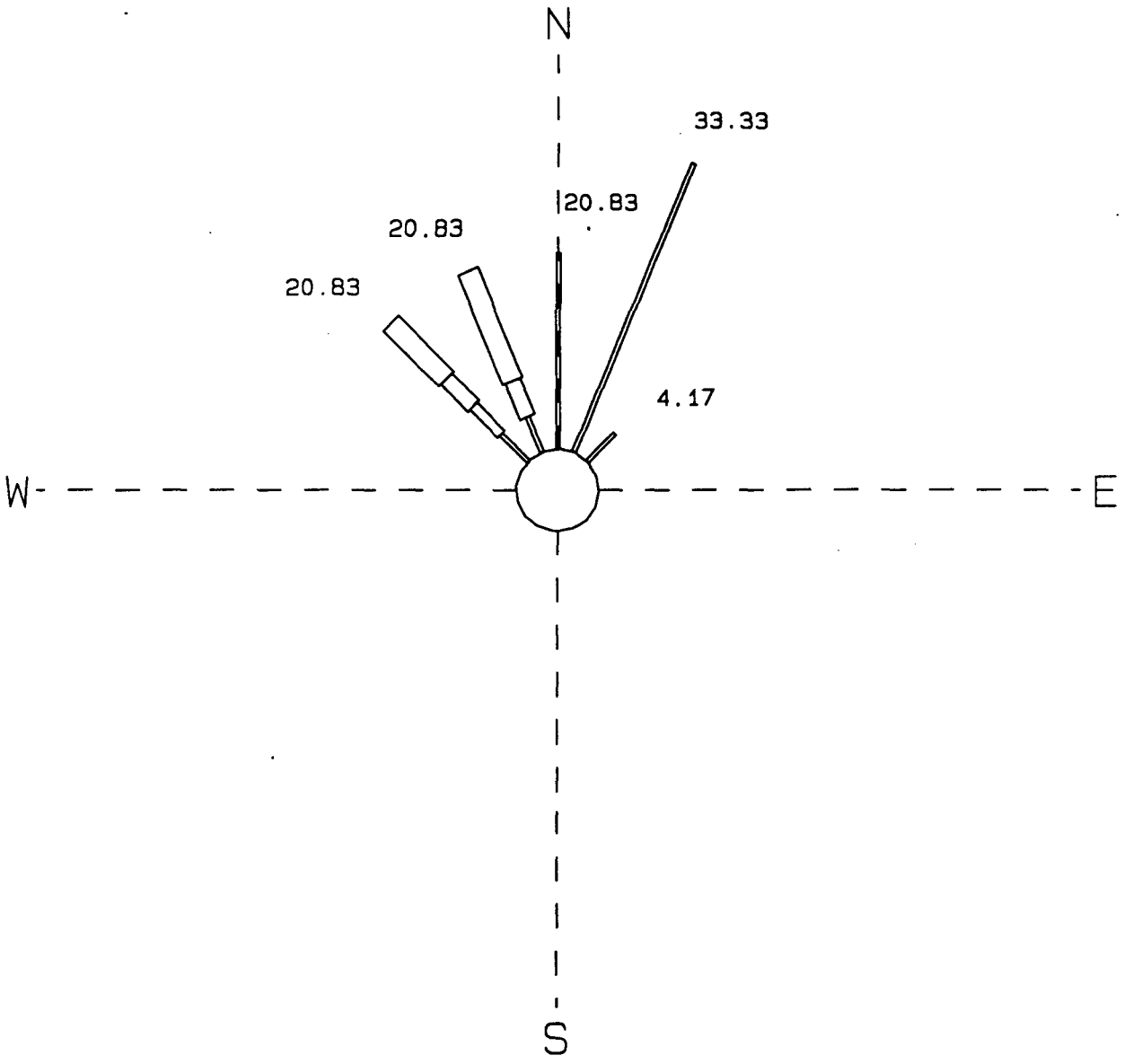

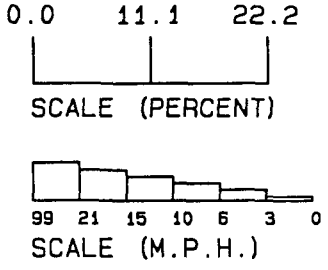

TOTAL HOURS:	24
PERCENT CALM:	0.00
PERCENT MISSING:	0.00

NEW BEDFORD HARBOR
24-HOUR WIND ROSE
START DATE: NOVEMBER 21,1989
START HOUR: 0900

TOTAL HOURS - 24
PERCENT CALM - .00
PERCENT MISSING - .00

WIND DIRECTION	WIND SPEED CATAGORY (MPH) < 3	3 - 6	6 -10	10-15	15 - 21	> 21	TOTAL
N	20.833	.000	.000	.000	.000	.000	20.833
NNE	33.333	.000	.000	.000	.000	.000	33.333
NE	4.167	.000	.000	.000	.000	.000	4.167
ENE	.000	.000	.000	.000	.000	.000	.000
E	.000	.000	.000	.000	.000	.000	.000
ESE	.000	.000	.000	.000	.000	.000	.000
SE	.000	.000	.000	.000	.000	.000	.000
SSE	.000	.000	.000	.000	.000	.000	.000
S	.000	.000	.000	.000	.000	.000	.000
SSW	.000	.000	.000	.000	.000	.000	.000
SW	.000	.000	.000	.000	.000	.000	.000
WSW	.000	.000	.000	.000	.000	.000	.000
W	.000	.000	.000	.000	.000	.000	.000
WNW	.000	.000	.000	.000	.000	.000	.000
NW	4.167	4.167	4.167	8.333	.000	.000	20.833
NNW	4.167	.000	4.167	12.500	.000	.000	20.833
ALL	66.667	4.167	8.333	20.833	.000	.000	100.000

NEW BEDFORD HARBOR
24-HOUR WIND ROSE
START DATE: 22 NOVEMBER 1989
START HOUR: 0900

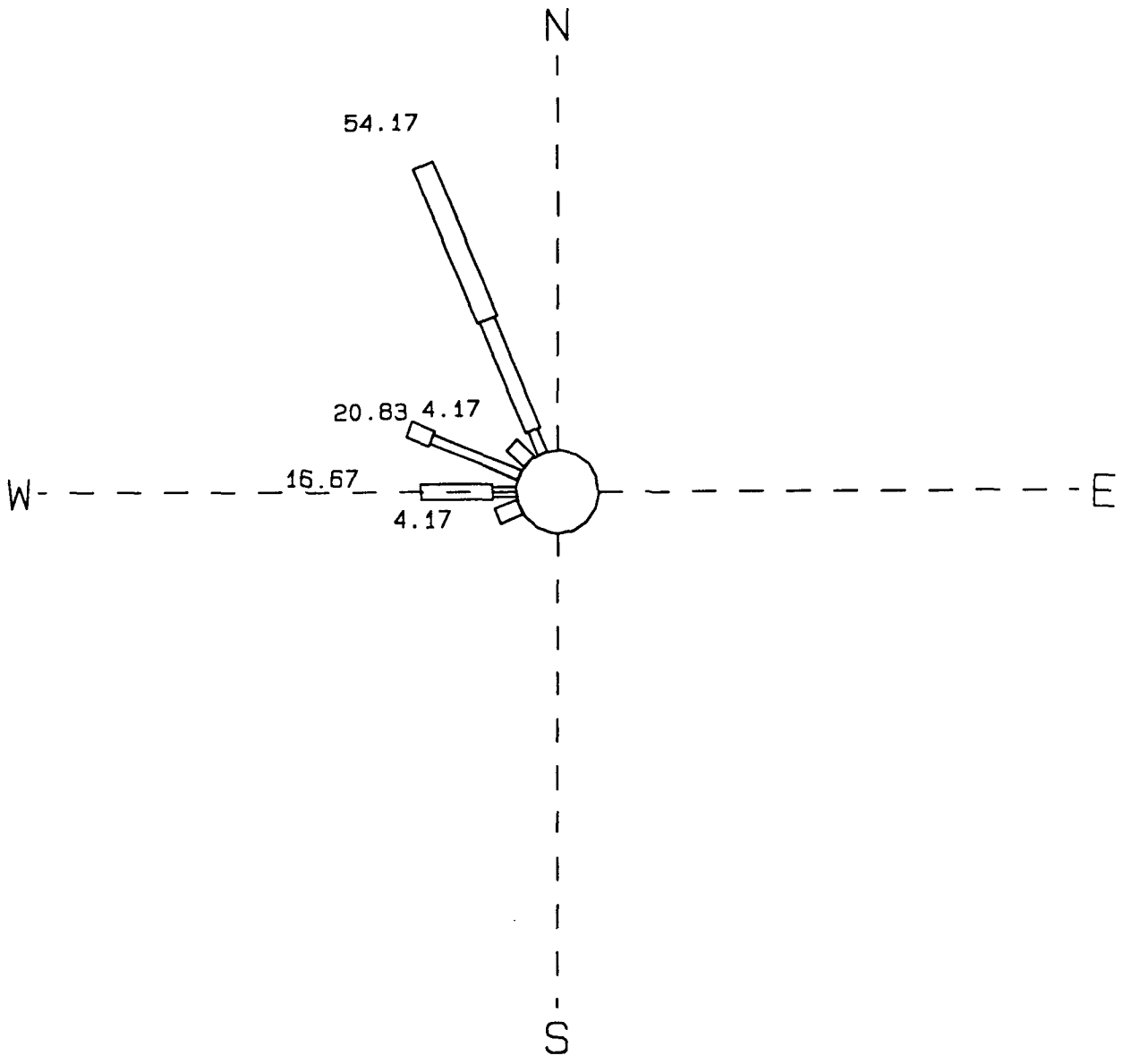

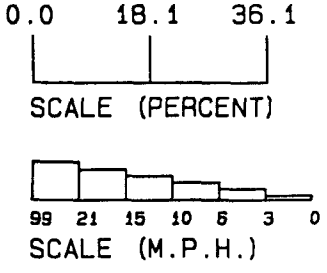

TOTAL HOURS:	24
PERCENT CALM:	0.00
PERCENT MISSING:	0.00

1

NEW BEDFORD HARBOR
24-HOUR WIND ROSE
START DATE: NOVEMBER 22,1989
START HOUR: 0900

TOTAL HOURS - 24
PERCENT CALM - .00
PERCENT MISSING - .00

WIND DIRECTION	WIND SPEED CATAGORY (MPH) < 3	3 - 6	6 -10	10-15	15 - 21	> 21	TOTAL
N	.000	.000	.000	.000	.000	.000	.000
NNE	.000	.000	.000	.000	.000	.000	.000
NE	.000	.000	.000	.000	.000	.000	.000
ENE	.000	.000	.000	.000	.000	.000	.000
E	.000	.000	.000	.000	.000	.000	.000
ESE	.000	.000	.000	.000	.000	.000	.000
SE	.000	.000	.000	.000	.000	.000	.000
SSE	.000	.000	.000	.000	.000	.000	.000
S	.000	.000	.000	.000	.000	.000	.000
SSW	.000	.000	.000	.000	.000	.000	.000
SW	.000	.000	.000	.000	.000	.000	.000
WSW	.000	.000	4.167	.000	.000	.000	4.167
W	.000	4.167	12.500	.000	.000	.000	16.667
WNW	.000	16.667	4.167	.000	.000	.000	20.833
NW	.000	.000	4.167	.000	.000	.000	4.167
NNW	.000	4.167	20.833	29.167	.000	.000	54.167
ALL	.000	25.000	45.833	29.167	.000	.000	100.000

NEW BEDFORD HARBOR
24-HOUR WIND ROSE
START DATE: 23 NOVEMBER 1989
START HOUR: 0900

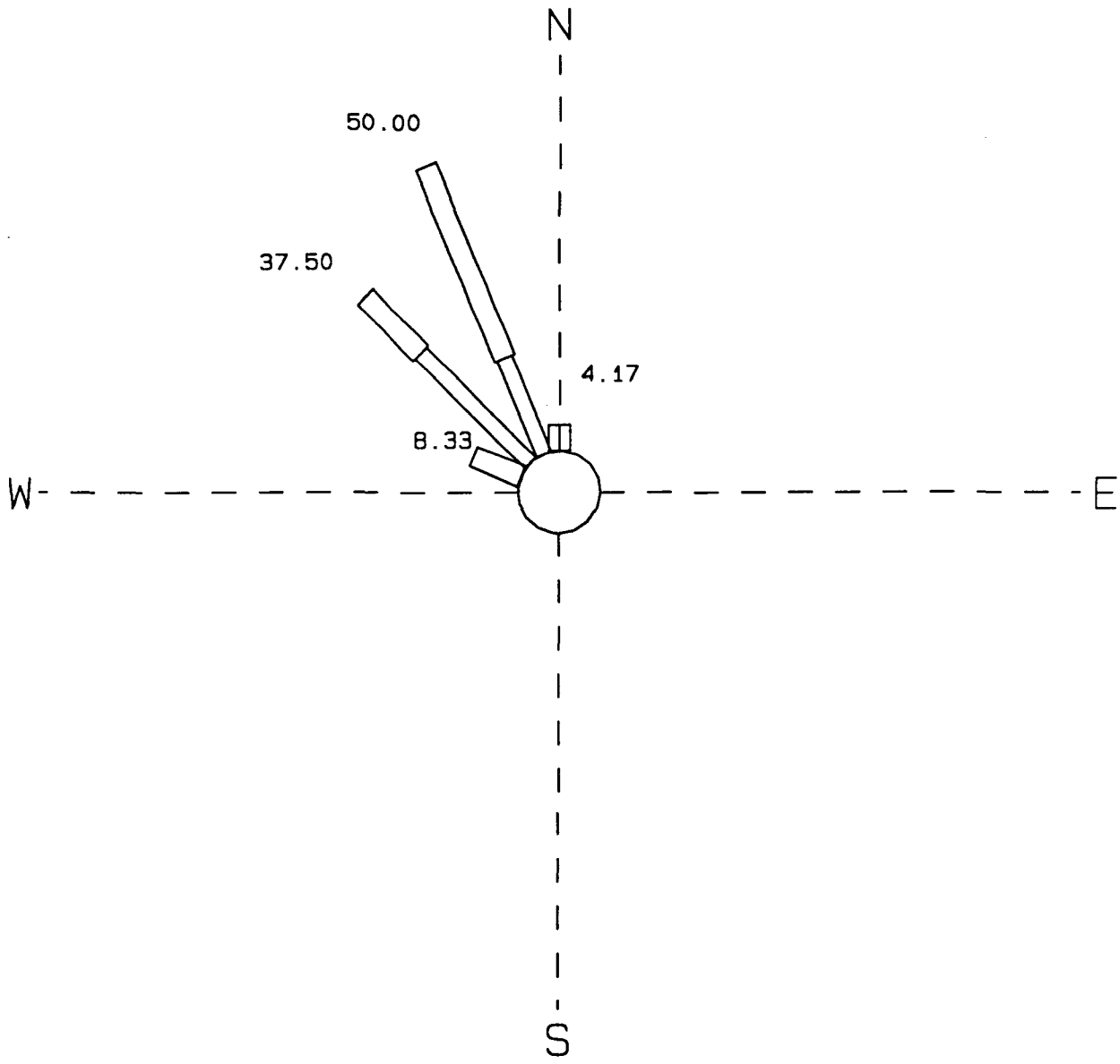

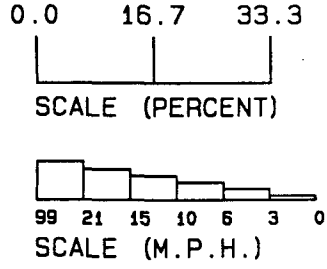

TOTAL HOURS:	24
PERCENT CALM:	0.00
PERCENT MISSING:	0.00

NEW BEDFORD HARBOR
24-HOUR WIND ROSE
START DATE: NOVEMBER 23,1989
START HOUR: 0900

TOTAL HOURS - 24
PERCENT CALM - .00
PERCENT MISSING - .00

WIND DIRECTION	WIND SPEED CATAGORY (MPH) < 3	3 - 6	6 -10	10-15	15 - 21	> 21	TOTAL
N	.000	.000	.000	4.167	.000	.000	4.167
NNE	.000	.000	.000	.000	.000	.000	.000
NE	.000	.000	.000	.000	.000	.000	.000
ENE	.000	.000	.000	.000	.000	.000	.000
E	.000	.000	.000	.000	.000	.000	.000
ESE	.000	.000	.000	.000	.000	.000	.000
SE	.000	.000	.000	.000	.000	.000	.000
SSE	.000	.000	.000	.000	.000	.000	.000
S	.000	.000	.000	.000	.000	.000	.000
SSW	.000	.000	.000	.000	.000	.000	.000
SW	.000	.000	.000	.000	.000	.000	.000
WSW	.000	.000	.000	.000	.000	.000	.000
W	.000	.000	.000	.000	.000	.000	.000
WNW	.000	.000	.000	8.333	.000	.000	8.333
NW	.000	.000	25.000	12.500	.000	.000	37.500
NNW	.000	.000	16.667	33.333	.000	.000	50.000
ALL	.000	.000	41.667	58.333	.000	.000	100.000

NEW BEDFORD HARBOR
24-HOUR WIND ROSE
START DATE: 25 NOVEMBER 1989
START HOUR: 0900

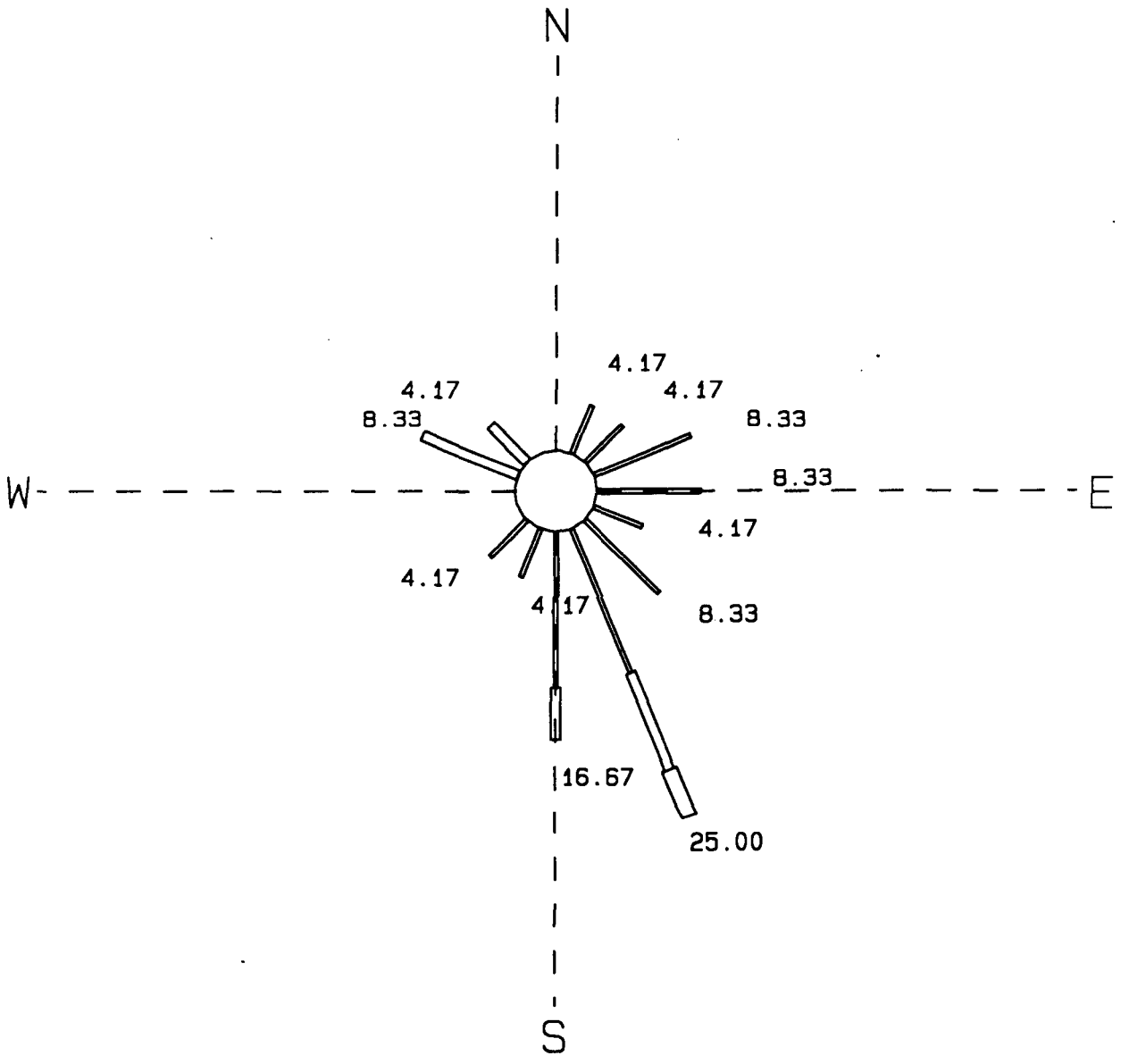

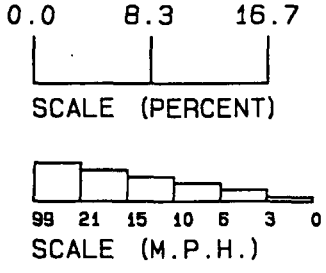

TOTAL HOURS:	24
PERCENT CALM:	0.00
PERCENT MISSING:	0.00

1

NEW BEDFORD HARBOR
24-HOUR WIND ROSE
START DATE: NOVEMBER 25,1989
START HOUR: 0900

TOTAL HOURS - 24
PERCENT CALM - .00
PERCENT MISSING - .00

WIND DIRECTION	WIND SPEED CATAGORY (MPH) < 3	3 - 6	6 -10	10-15	15 - 21	> 21	TOTAL
N	.000	.000	.000	.000	.000	.000	.000
NNE	4.167	.000	.000	.000	.000	.000	4.167
NE	4.167	.000	.000	.000	.000	.000	4.167
ENE	8.333	.000	.000	.000	.000	.000	8.333
E	8.333	.000	.000	.000	.000	.000	8.333
ESE	4.167	.000	.000	.000	.000	.000	4.167
SE	8.333	.000	.000	.000	.000	.000	8.333
SSE	12.500	8.333	4.167	.000	.000	.000	25.000
S	12.500	4.167	.000	.000	.000	.000	16.667
SSW	4.167	.000	.000	.000	.000	.000	4.167
SW	4.167	.000	.000	.000	.000	.000	4.167
WSW	.000	.000	.000	.000	.000	.000	.000
W	.000	.000	.000	.000	.000	.000	.000
WNW	.000	8.333	.000	.000	.000	.000	8.333
NW	.000	4.167	.000	.000	.000	.000	4.167
NNW	.000	.000	.000	.000	.000	.000	.000
ALL	70.833	25.000	4.167	.000	.000	.000	100.000

NEW BEDFORD HARBOR
24-HOUR WIND ROSE
START DATE: 29 NOVEMBER 1989
START HOUR: 0900

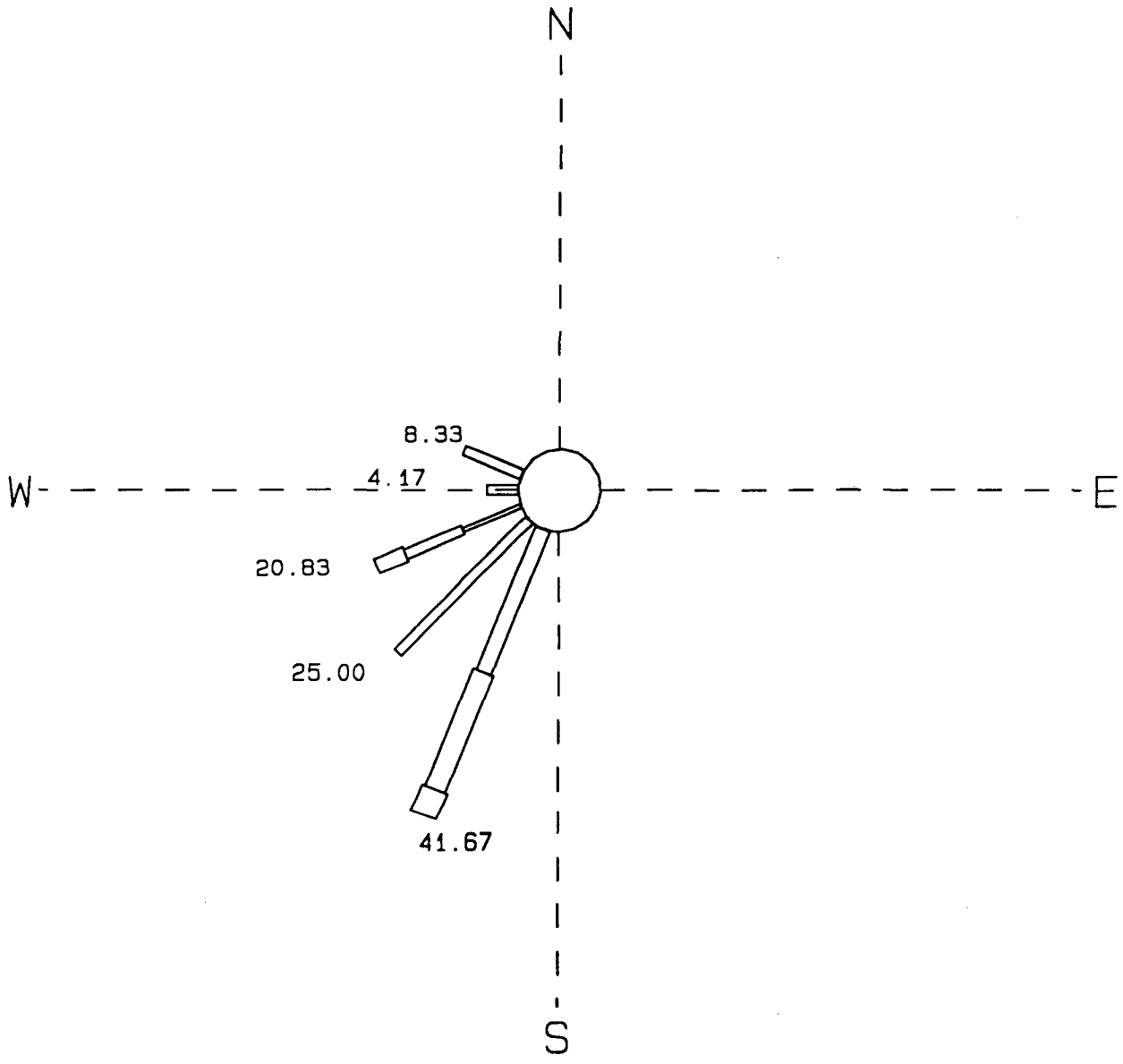

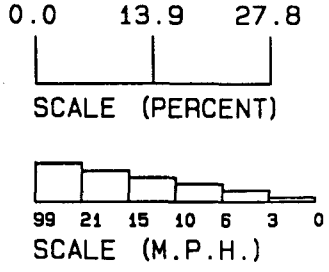

TOTAL HOURS:	24
PERCENT CALM:	0.00
PERCENT MISSING:	0.00

NEW BEDFORD HARBOR
24-HOUR WIND ROSE
START DATE: NOVEMBER 29,1989
START HOUR: 0900

TOTAL HOURS - 24
PERCENT CALM - .00
PERCENT MISSING - .00

WIND DIRECTION	WIND SPEED CATAGORY (MPH) < 3	3 - 6	6 -10	10-15	15 - 21	> 21	TOTAL
N	.000	.000	.000	.000	.000	.000	.000
NNE	.000	.000	.000	.000	.000	.000	.000
NE	.000	.000	.000	.000	.000	.000	.000
ENE	.000	.000	.000	.000	.000	.000	.000
E	.000	.000	.000	.000	.000	.000	.000
ESE	.000	.000	.000	.000	.000	.000	.000
SE	.000	.000	.000	.000	.000	.000	.000
SSE	.000	.000	.000	.000	.000	.000	.000
S	.000	.000	.000	.000	.000	.000	.000
SSW	.000	.000	20.833	16.667	4.167	.000	41.667
SW	.000	25.000	.000	.000	.000	.000	25.000
WSW	8.333	8.333	4.167	.000	.000	.000	20.833
W	.000	4.167	.000	.000	.000	.000	4.167
WNW	.000	8.333	.000	.000	.000	.000	8.333
NW	.000	.000	.000	.000	.000	.000	.000
NNW	.000	.000	.000	.000	.000	.000	.000
ALL	8.333	45.833	25.000	16.667	4.167	.000	100.000

NEW BEDFORD HARBOR
24-HOUR WIND ROSE
START DATE: 30 NOVEMBER 1989
START HOUR: 0900

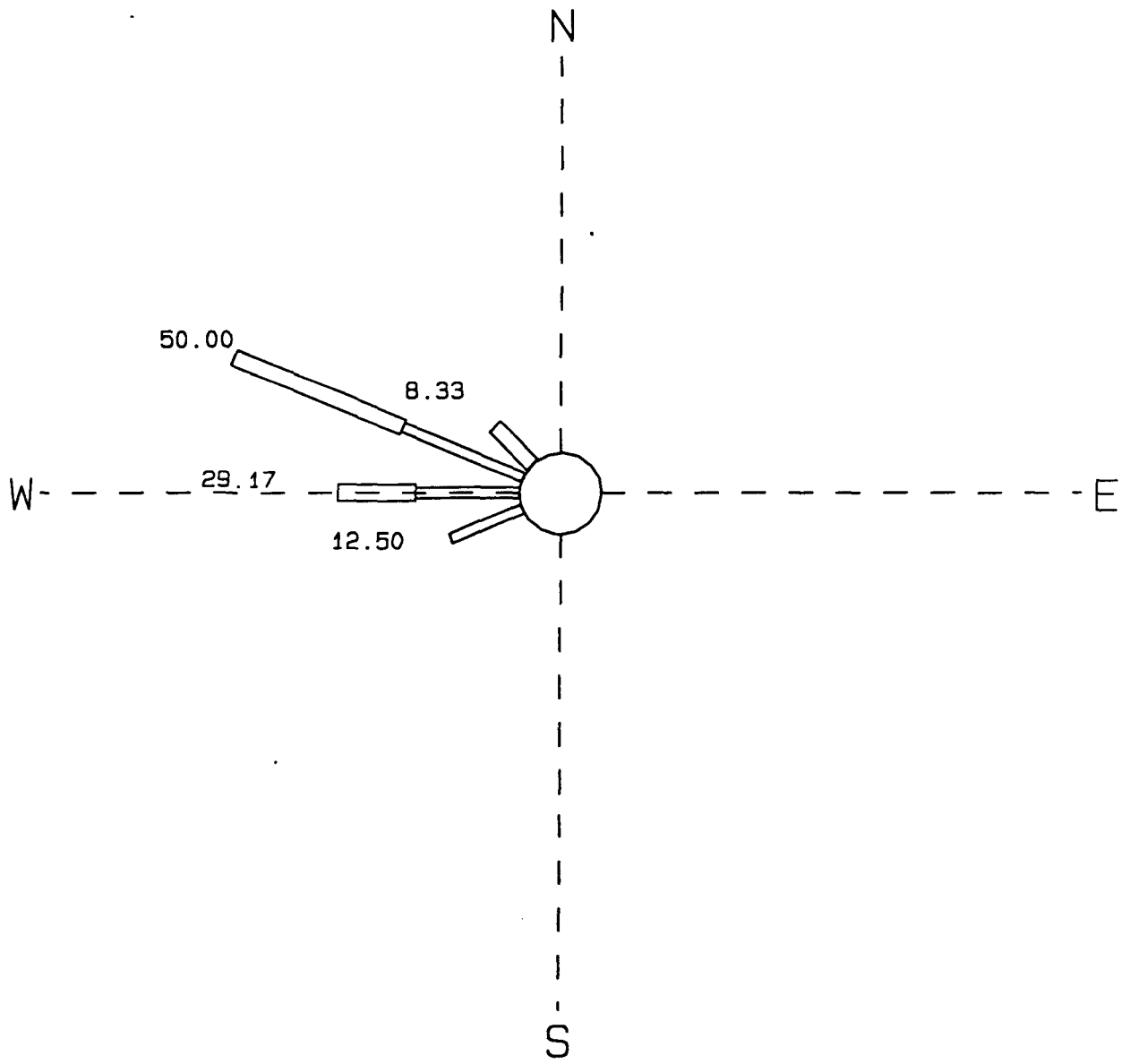

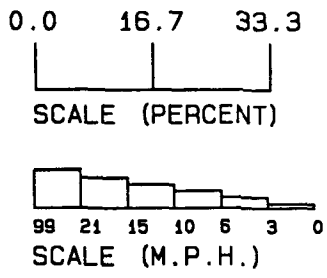

TOTAL HOURS:	24
PERCENT CALM:	0.00
PERCENT MISSING:	0.00

NEW BEDFORD HARBOR
24-HOUR WIND ROSE
START DATE: NOVEMBER 30,1989
START HOUR: 0900

TOTAL HOURS - 24
PERCENT CALM - .00
PERCENT MISSING - .00

WIND DIRECTION	WIND SPEED CATAGORY (MPH) < 3	3 - 6	6 -10	10-15	15 - 21	> 21	TOTAL
N	.000	.000	.000	.000	.000	.000	.000
NNE	.000	.000	.000	.000	.000	.000	.000
NE	.000	.000	.000	.000	.000	.000	.000
ENE	.000	.000	.000	.000	.000	.000	.000
E	.000	.000	.000	.000	.000	.000	.000
ESE	.000	.000	.000	.000	.000	.000	.000
SE	.000	.000	.000	.000	.000	.000	.000
SSE	.000	.000	.000	.000	.000	.000	.000
S	.000	.000	.000	.000	.000	.000	.000
SSW	.000	.000	.000	.000	.000	.000	.000
SW	.000	.000	.000	.000	.000	.000	.000
WSW	.000	12.500	.000	.000	.000	.000	12.500
W	.000	16.667	12.500	.000	.000	.000	29.167
WNW	.000	20.833	29.167	.000	.000	.000	50.000
NW	.000	.000	8.333	.000	.000	.000	8.333
NNW	.000	.000	.000	.000	.000	.000	.000
ALL	.000	50.000	50.000	.000	.000	.000	100.000

NEW BEDFORD HARBOR
24-HOUR WIND ROSE
START DATE: 1 DECEMBER 1989
START HOUR: 0900

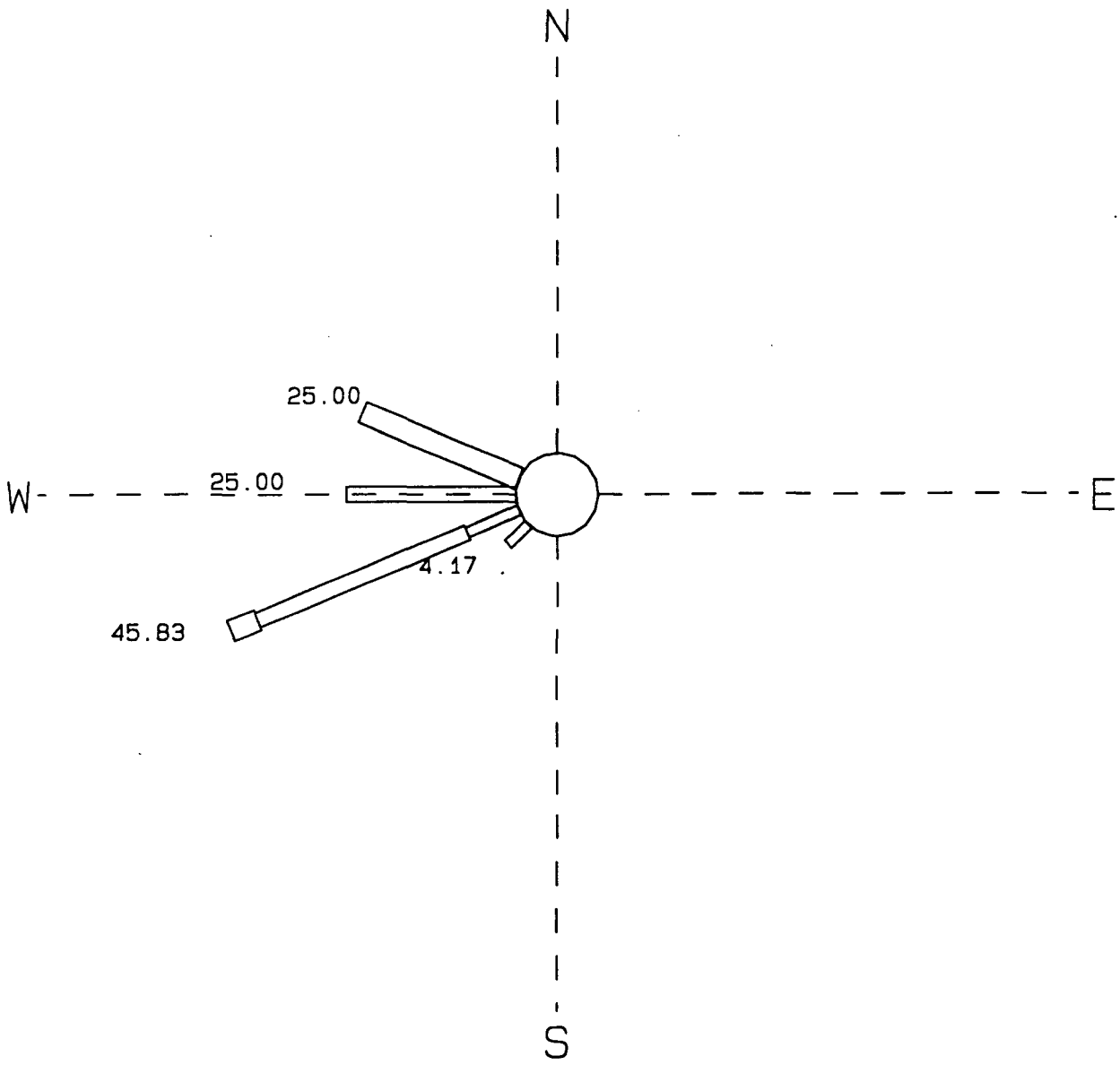

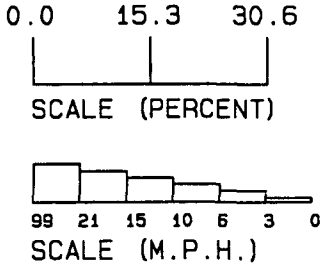

TOTAL HOURS:	24
PERCENT CALM:	0.00
PERCENT MISSING:	0.00

NEW BEDFORD HARBOR
24-HOUR WIND ROSE
START DATE: 1 DECEMBER 1989
START HOUR: 0900

TOTAL HOURS - 24
PERCENT CALM - .00
PERCENT MISSING - .00

WIND DIRECTION	WIND SPEED CATAGORY (MPH) < 3	3 - 6	6 -10	10-15	15 - 21	> 21	TOTAL
N	.000	.000	.000	.000	.000	.000	.000
NNE	.000	.000	.000	.000	.000	.000	.000
NE	.000	.000	.000	.000	.000	.000	.000
ENE	.000	.000	.000	.000	.000	.000	.000
E	.000	.000	.000	.000	.000	.000	.000
ESE	.000	.000	.000	.000	.000	.000	.000
SE	.000	.000	.000	.000	.000	.000	.000
SSE	.000	.000	.000	.000	.000	.000	.000
S	.000	.000	.000	.000	.000	.000	.000
SSW	.000	.000	.000	.000	.000	.000	.000
SW	.000	4.167	.000	.000	.000	.000	4.167
WSW	.000	8.333	33.333	4.167	.000	.000	45.833
W	.000	.000	25.000	.000	.000	.000	25.000
WNW	.000	.000	.000	25.000	.000	.000	25.000
NW	.000	.000	.000	.000	.000	.000	.000
NNW	.000	.000	.000	.000	.000	.000	.000
ALL	.000	12.500	58.333	29.167	.000	.000	100.000

NEW BEDFORD HARBOR
24-HOUR WIND ROSE
START DATE: 2 DECEMBER 1989
START HOUR: 0900

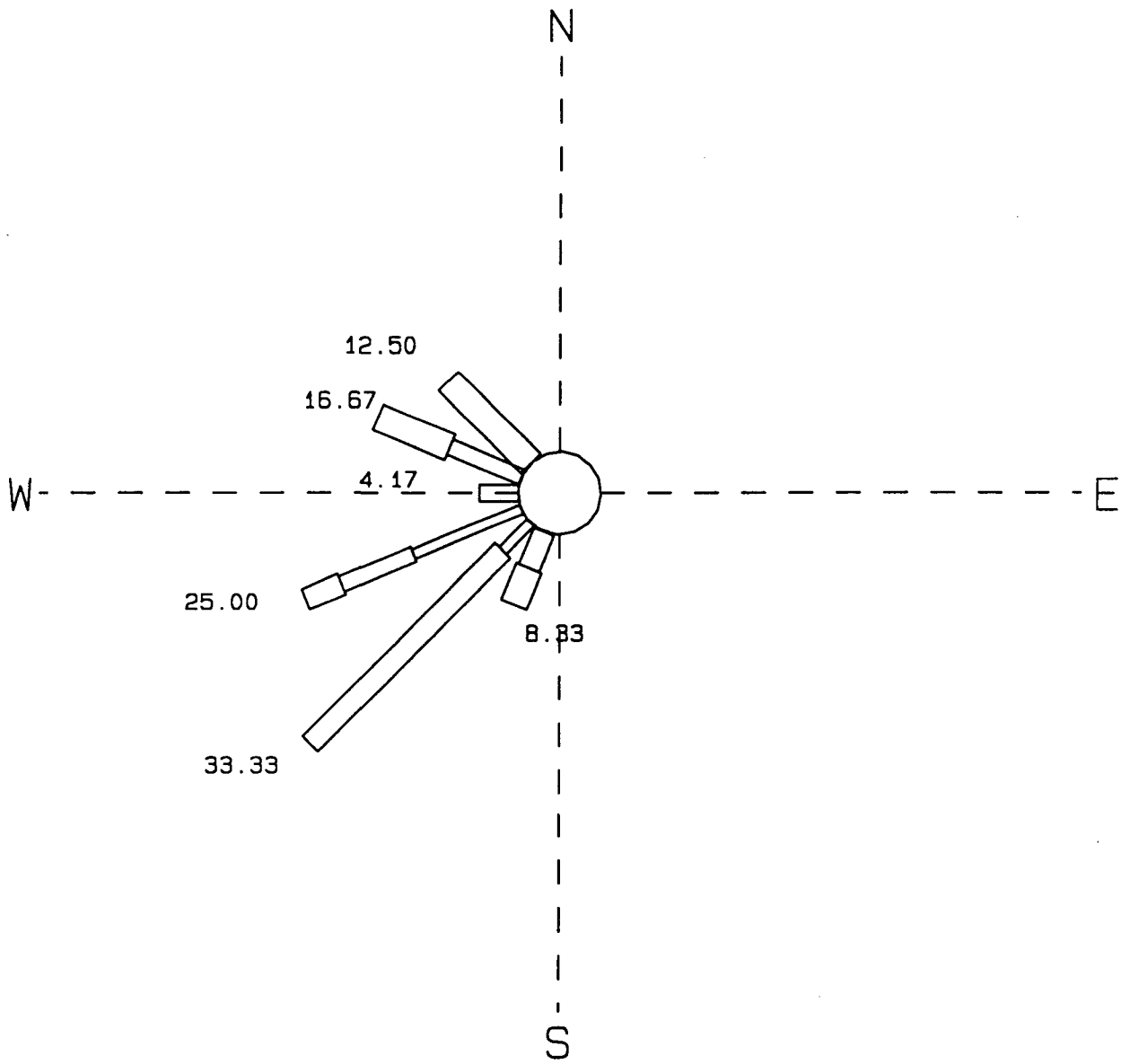

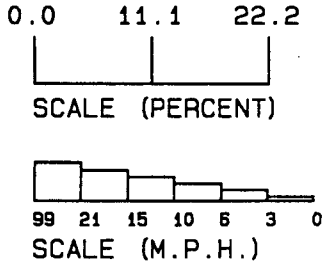

TOTAL HOURS:	24
PERCENT CALM:	0.00
PERCENT MISSING:	0.00

NEW BEDFORD HARBOR
24-HOUR WIND ROSE
START DATE: 2 DECEMBER 1989
START HOUR: 0900

TOTAL HOURS - 24
PERCENT CALM - .00
PERCENT MISSING - .00

WIND DIRECTION	WIND SPEED CATAGORY (MPH) < 3	3 - 6	6 -10	10-15	15 - 21	> 21	TOTAL
N	.000	.000	.000	.000	.000	.000	.000
NNE	.000	.000	.000	.000	.000	.000	.000
NE	.000	.000	.000	.000	.000	.000	.000
ENE	.000	.000	.000	.000	.000	.000	.000
E	.000	.000	.000	.000	.000	.000	.000
ESE	.000	.000	.000	.000	.000	.000	.000
SE	.000	.000	.000	.000	.000	.000	.000
SSE	.000	.000	.000	.000	.000	.000	.000
S	.000	.000	.000	.000	.000	.000	.000
SSW	.000	.000	.000	4.167	4.167	.000	8.333
SW	.000	4.167	.000	29.167	.000	.000	33.333
WSW	.000	12.500	8.333	4.167	.000	.000	25.000
W	.000	.000	4.167	.000	.000	.000	4.167
WNW	.000	.000	8.333	.000	8.333	.000	16.667
NW	.000	.000	.000	.000	12.500	.000	12.500
NNW	.000	.000	.000	.000	.000	.000	.000
ALL	.000	16.667	20.833	37.500	25.000	.000	100.000

NEW BEDFORD HARBOR
24-HOUR WIND ROSE
START DATE: 3 DECEMBER 1989
START HOUR: 0900

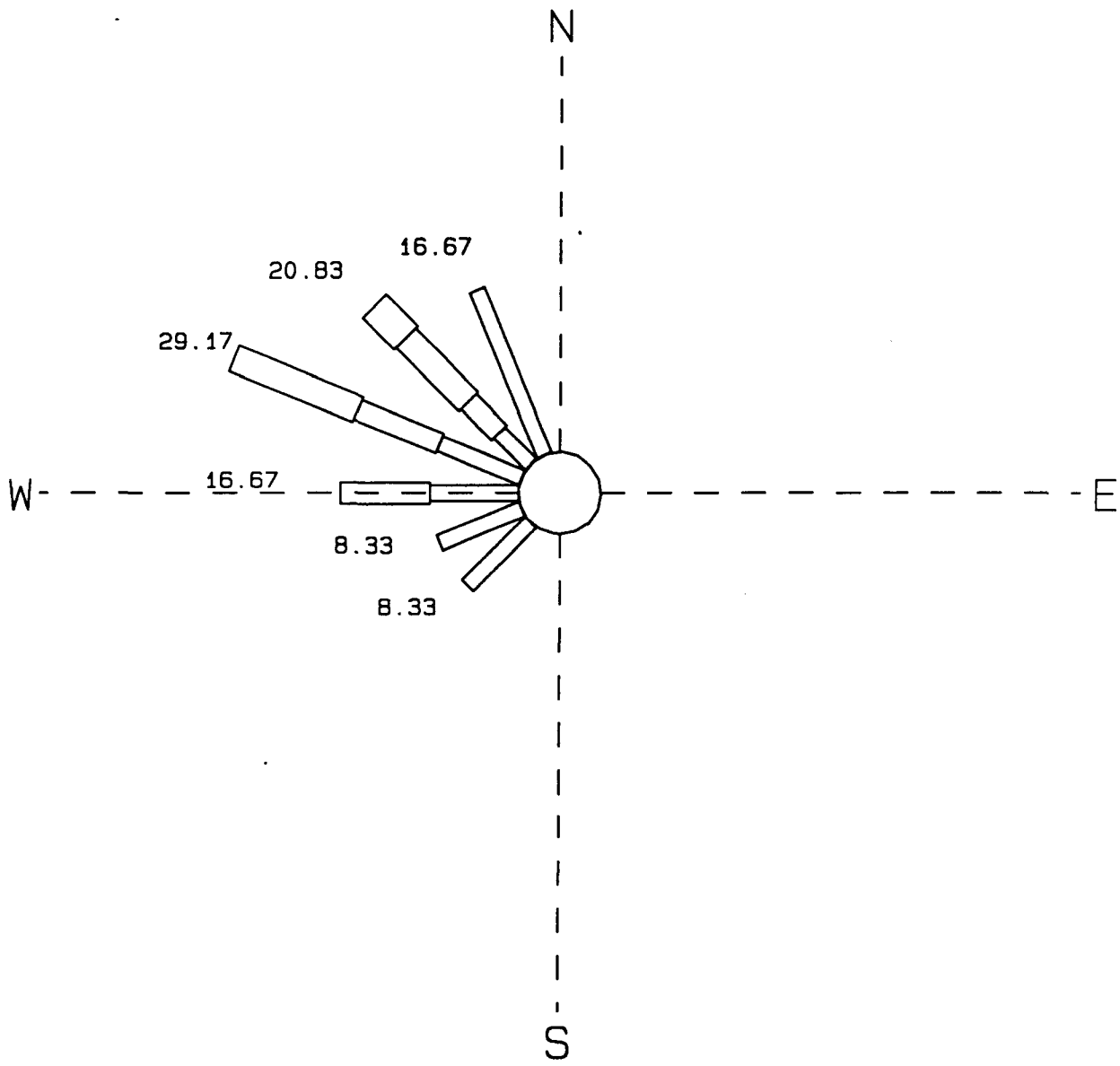

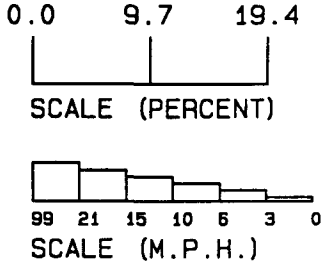

TOTAL HOURS:	24
PERCENT CALM:	0.00
PERCENT MISSING:	0.00

NEW BEDFORD HARBOR
24-HOUR WIND ROSE
START DATE: 3 DECEMBER 1989
START HOUR: 0900

TOTAL HOURS - 24
PERCENT CALM - .00
PERCENT MISSING - .00

WIND DIRECTION	WIND SPEED CATAGORY (MPH) < 3	3 - 6	6 -10	10-15	15 - 21	> 21	TOTAL
N	.000	.000	.000	.000	.000	.000	.000
NNE	.000	.000	.000	.000	.000	.000	.000
NE	.000	.000	.000	.000	.000	.000	.000
ENE	.000	.000	.000	.000	.000	.000	.000
E	.000	.000	.000	.000	.000	.000	.000
ESE	.000	.000	.000	.000	.000	.000	.000
SE	.000	.000	.000	.000	.000	.000	.000
SSE	.000	.000	.000	.000	.000	.000	.000
S	.000	.000	.000	.000	.000	.000	.000
SSW	.000	.000	.000	.000	.000	.000	.000
SW	.000	.000	8.333	.000	.000	.000	8.333
WSW	.000	.000	8.333	.000	.000	.000	8.333
W	.000	.000	8.333	8.333	.000	.000	16.667
WNW	.000	.000	8.333	8.333	12.500	.000	29.167
NW	.000	.000	4.167	4.167	8.333	4.167	20.833
NNW	.000	.000	16.667	.000	.000	.000	16.667
ALL	.000	.000	54.167	20.833	20.833	4.167	100.000

NEW BEDFORD HARBOR
24-HOUR WIND ROSE
START DATE: 4 DECEMBER 1989
START HOUR: 0900

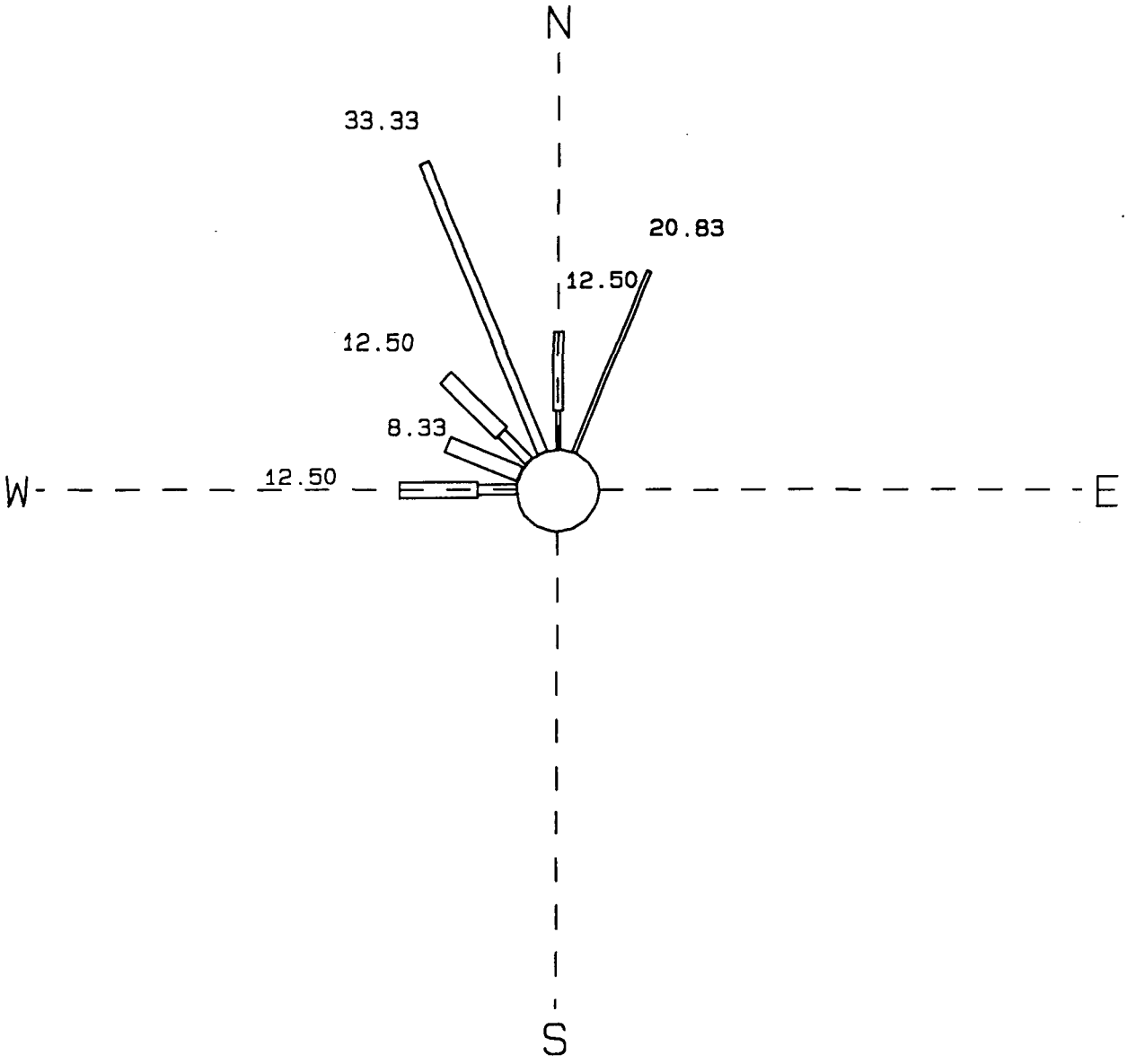

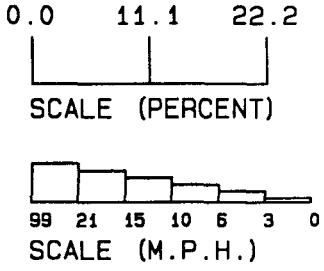

TOTAL HOURS:	24
PERCENT CALM:	0.00
PERCENT MISSING:	0.00

NEW BEDFORD HARBOR
24-HOUR WIND ROSE
START DATE: 4 DECEMBER 1989
START HOUR: 0900

TOTAL HOURS - 24
PERCENT CALM - .00
PERCENT MISSING - .00

WIND DIRECTION	WIND SPEED CATAGORY (MPH) < 3	3 - 6	6 -10	10-15	15 - 21	> 21	TOTAL
N	4.167	8.333	.000	.000	.000	.000	12.500
NNE	20.833	.000	.000	.000	.000	.000	20.833
NE	.000	.000	.000	.000	.000	.000	.000
ENE	.000	.000	.000	.000	.000	.000	.000
E	.000	.000	.000	.000	.000	.000	.000
ESE	.000	.000	.000	.000	.000	.000	.000
SE	.000	.000	.000	.000	.000	.000	.000
SSE	.000	.000	.000	.000	.000	.000	.000
S	.000	.000	.000	.000	.000	.000	.000
SSW	.000	.000	.000	.000	.000	.000	.000
SW	.000	.000	.000	.000	.000	.000	.000
WSW	.000	.000	.000	.000	.000	.000	.000
W	.000	4.167	8.333	.000	.000	.000	12.500
WNW	.000	.000	8.333	.000	.000	.000	8.333
NW	.000	4.167	8.333	.000	.000	.000	12.500
NNW	.000	33.333	.000	.000	.000	.000	33.333
ALL	25.000	50.000	25.000	.000	.000	.000	100.000

NEW BEDFORD HARBOR
24-HOUR WIND ROSE
START DATE: 5 DECEMBER 1989
START HOUR: 0900

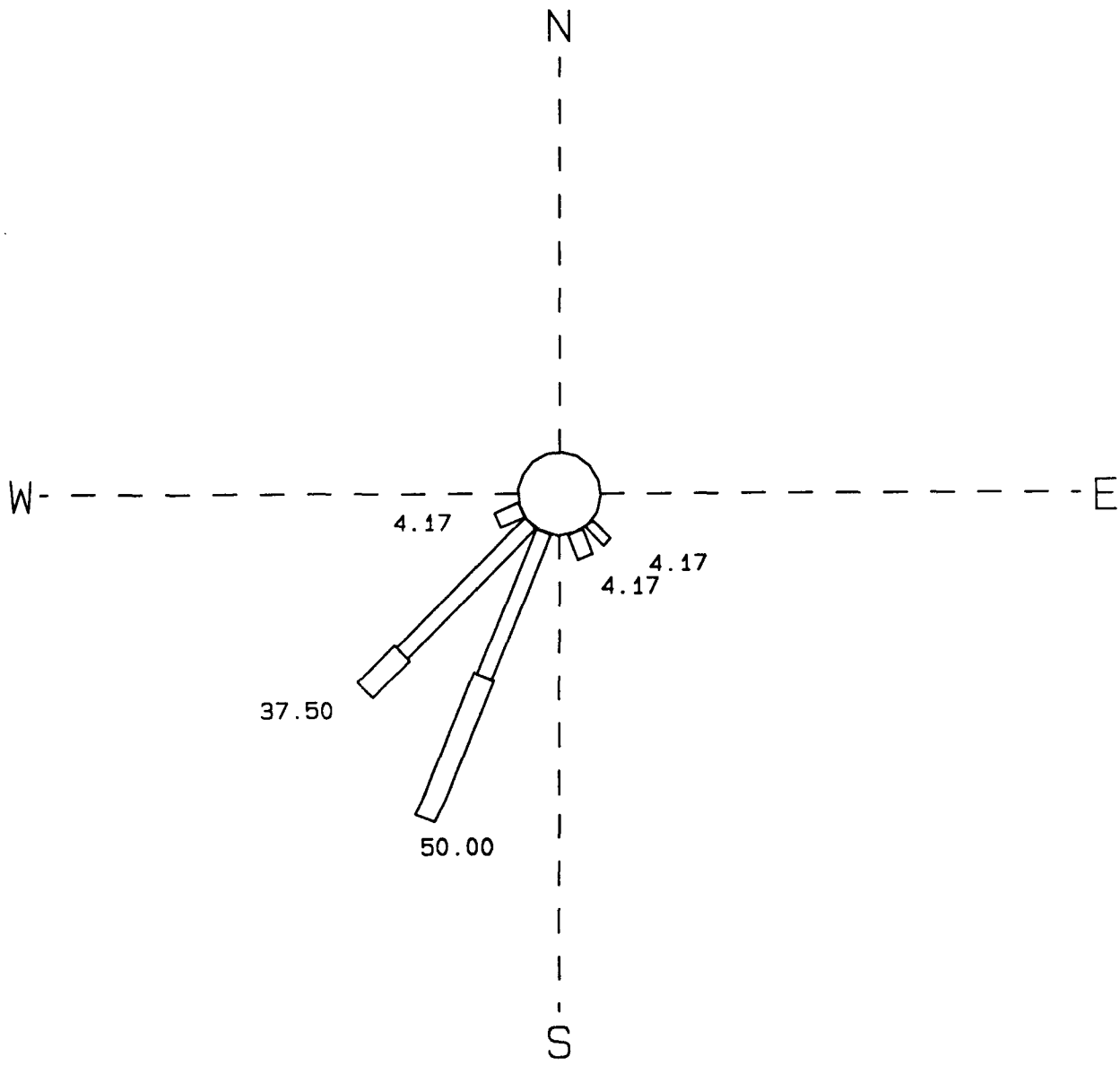

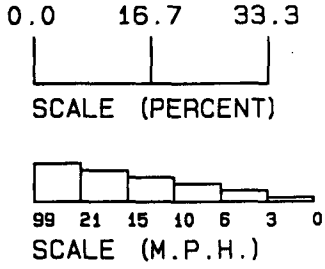

TOTAL HOURS:	24
PERCENT CALM:	0.00
PERCENT MISSING:	0.00

NEW BEDFORD HARBOR
24-HOUR WIND ROSE
START DATE: 5 DECEMBER 1989
START HOUR: 0900

TOTAL HOURS - 24
PERCENT CALM - .00
PERCENT MISSING - .00

WIND DIRECTION	WIND SPEED CATAGORY (MPH) < 3	3 - 6	6 -10	10-15	15 - 21	> 21	TOTAL
N	.000	.000	.000	.000	.000	.000	.000
NNE	.000	.000	.000	.000	.000	.000	.000
NE	.000	.000	.000	.000	.000	.000	.000
ENE	.000	.000	.000	.000	.000	.000	.000
E	.000	.000	.000	.000	.000	.000	.000
ESE	.000	.000	.000	.000	.000	.000	.000
SE	.000	4.167	.000	.000	.000	.000	4.167
SSE	.000	.000	4.167	.000	.000	.000	4.167
S	.000	.000	.000	.000	.000	.000	.000
SSW	.000	.000	25.000	25.000	.000	.000	50.000
SW	.000	.000	29.167	8.333	.000	.000	37.500
WSW	.000	.000	4.167	.000	.000	.000	4.167
W	.000	.000	.000	.000	.000	.000	.000
WNW	.000	.000	.000	.000	.000	.000	.000
NW	.000	.000	.000	.000	.000	.000	.000
NNW	.000	.000	.000	.000	.000	.000	.000
ALL	.000	4.167	62.500	33.333	.000	.000	100.000

NEW BEDFORD HARBOR
24-HOUR WIND ROSE
START DATE: 6 DECEMBER 1989
START HOUR: 0900

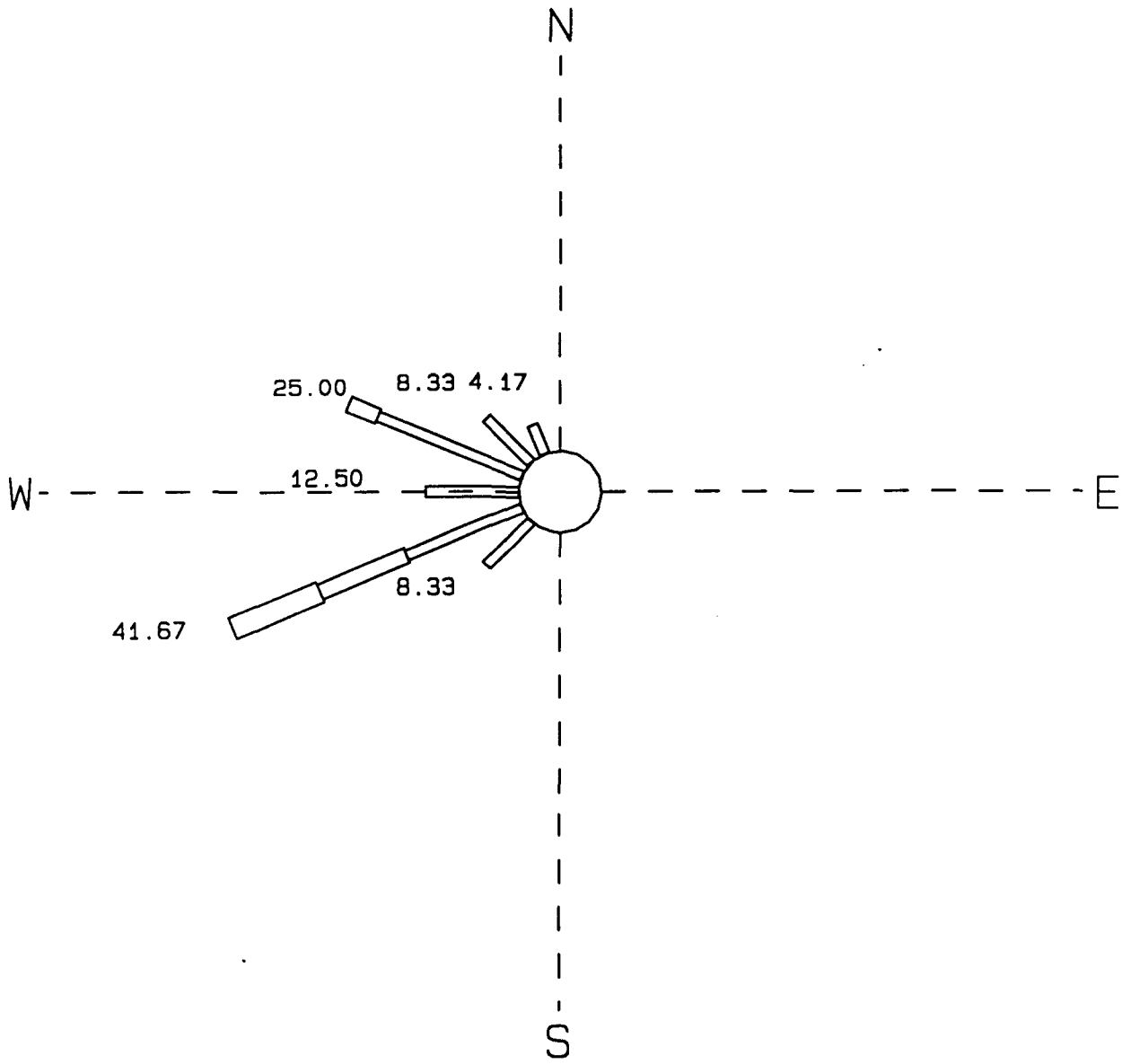

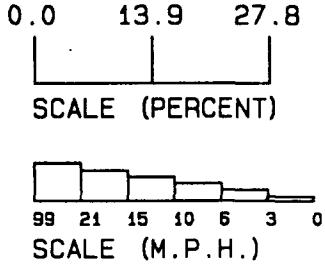

TOTAL HOURS:	24
PERCENT CALM:	0.00
PERCENT MISSING:	0.00

NEW BEDFORD HARBOR
24-HOUR WIND ROSE
START DATE: 6 DECEMBER 1989
START HOUR: 0900

TOTAL HOURS - 24
PERCENT CALM - .00
PERCENT MISSING - .00

WIND DIRECTION	WIND SPEED CATAGORY (MPH) < 3	3 - 6	6 -10	10-15	15 - 21	> 21	TOTAL
N	.000	.000	.000	.000	.000	.000	.000
NNE	.000	.000	.000	.000	.000	.000	.000
NE	.000	.000	.000	.000	.000	.000	.000
ENE	.000	.000	.000	.000	.000	.000	.000
E	.000	.000	.000	.000	.000	.000	.000
ESE	.000	.000	.000	.000	.000	.000	.000
SE	.000	.000	.000	.000	.000	.000	.000
SSE	.000	.000	.000	.000	.000	.000	.000
S	.000	.000	.000	.000	.000	.000	.000
SSW	.000	.000	.000	.000	.000	.000	.000
SW	.000	8.333	.000	.000	.000	.000	8.333
WSW	.000	16.667	12.500	12.500	.000	.000	41.667
W	.000	12.500	.000	.000	.000	.000	12.500
WNW	.000	20.833	4.167	.000	.000	.000	25.000
NW	.000	8.333	.000	.000	.000	.000	8.333
NNW	.000	4.167	.000	.000	.000	.000	4.167
ALL	.000	70.833	16.667	12.500	.000	.000	100.000

NEW BEDFORD HARBOR
24-HOUR WIND ROSE
START DATE: 9 DECEMBER 1989
START HOUR: 0900

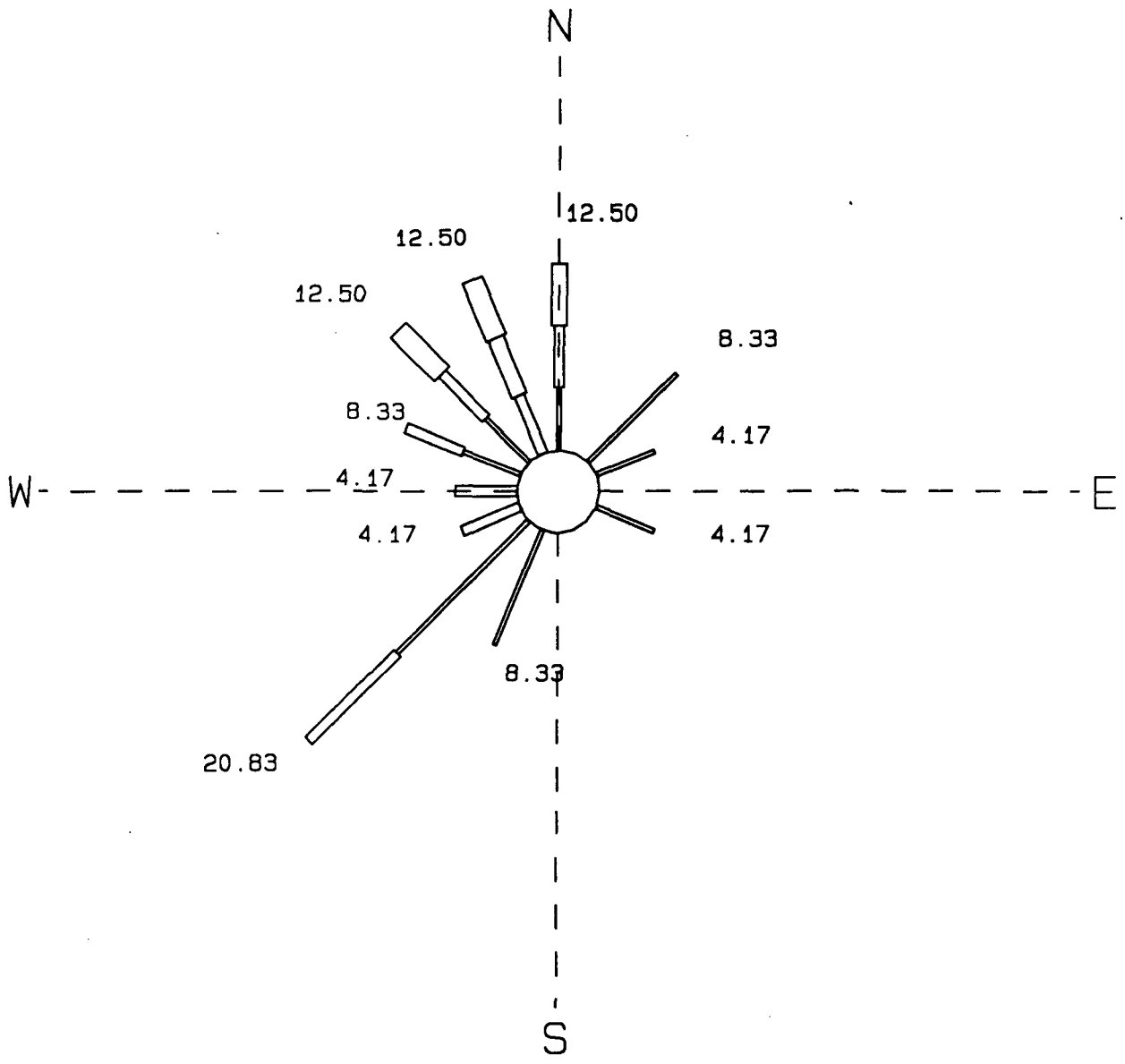

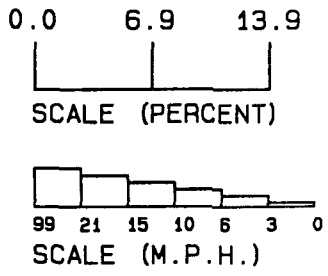

TOTAL HOURS:	24
PERCENT CALM:	0.00
PERCENT MISSING:	0.00

NEW BEDFORD HARBOR
24-HOUR WIND ROSE
START DATE: 9 DECEMBER 1989
START HOUR: 0900

TOTAL HOURS - 24
PERCENT CALM - .00
PERCENT MISSING - .00

WIND DIRECTION	WIND SPEED CATAGORY (MPH) < 3	3 - 6	6 -10	10-15	15 - 21	> 21	TOTAL
N	4.167	4.167	4.167	.000	.000	.000	12.500
NNE	.000	.000	.000	.000	.000	.000	.000
NE	8.333	.000	.000	.000	.000	.000	8.333
ENE	4.167	.000	.000	.000	.000	.000	4.167
E	.000	.000	.000	.000	.000	.000	.000
ESE	4.167	.000	.000	.000	.000	.000	4.167
SE	.000	.000	.000	.000	.000	.000	.000
SSE	.000	.000	.000	.000	.000	.000	.000
S	.000	.000	.000	.000	.000	.000	.000
SSW	8.333	.000	.000	.000	.000	.000	8.333
SW	12.500	8.333	.000	.000	.000	.000	20.833
WSW	.000	4.167	.000	.000	.000	.000	4.167
W	.000	4.167	.000	.000	.000	.000	4.167
WNW	4.167	4.167	.000	.000	.000	.000	8.333
NW	4.167	4.167	.000	4.167	.000	.000	12.500
NNW	.000	4.167	4.167	4.167	.000	.000	12.500
ALL	50.000	33.333	8.333	8.333	.000	.000	100.000

NEW BEDFORD HARBOR
24-HOUR WIND ROSE
START DATE: 10 DECEMBER 1989
START HOUR: 0900

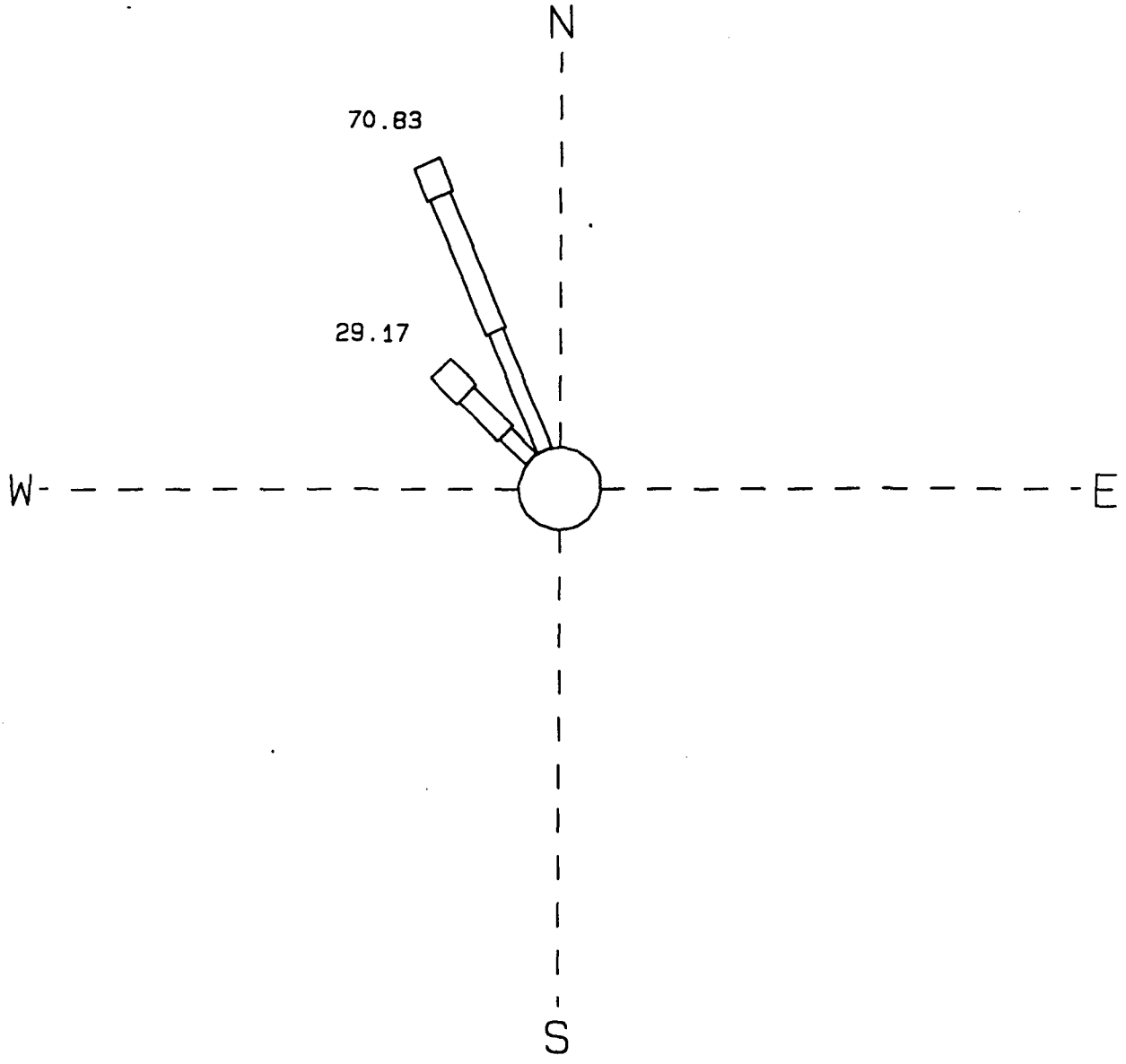

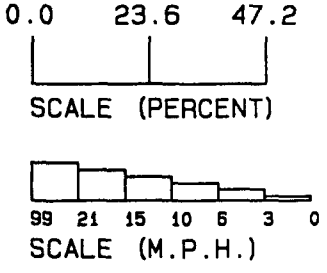

TOTAL HOURS:	24
PERCENT CALM:	0.00
PERCENT MISSING:	0.00

NEW BEDFORD HARBOR
24-HOUR WIND ROSE
START DATE: 10 DECEMBER 1989
START HOUR: 0900

TOTAL HOURS - 24
PERCENT CALM - .00
PERCENT MISSING - .00

WIND DIRECTION	WIND SPEED CATAGORY (MPH) < 3	3 - 6	6 -10	10-15	15 - 21	> 21	TOTAL
N	.000	.000	.000	.000	.000	.000	.000
NNE	.000	.000	.000	.000	.000	.000	.000
NE	.000	.000	.000	.000	.000	.000	.000
ENE	.000	.000	.000	.000	.000	.000	.000
E	.000	.000	.000	.000	.000	.000	.000
ESE	.000	.000	.000	.000	.000	.000	.000
SE	.000	.000	.000	.000	.000	.000	.000
SSE	.000	.000	.000	.000	.000	.000	.000
S	.000	.000	.000	.000	.000	.000	.000
SSW	.000	.000	.000	.000	.000	.000	.000
SW	.000	.000	.000	.000	.000	.000	.000
WSW	.000	.000	.000	.000	.000	.000	.000
W	.000	.000	.000	.000	.000	.000	.000
WNW	.000	.000	.000	.000	.000	.000	.000
NW	.000	.000	8.333	12.500	8.333	.000	29.167
NNW	.000	.000	29.167	33.333	8.333	.000	70.833
ALL	.000	.000	37.500	45.833	16.667	.000	100.000

NEW BEDFORD HARBOR
24-HOUR WIND ROSE
START DATE: 11 DECEMBER 1989
START HOUR: 0900

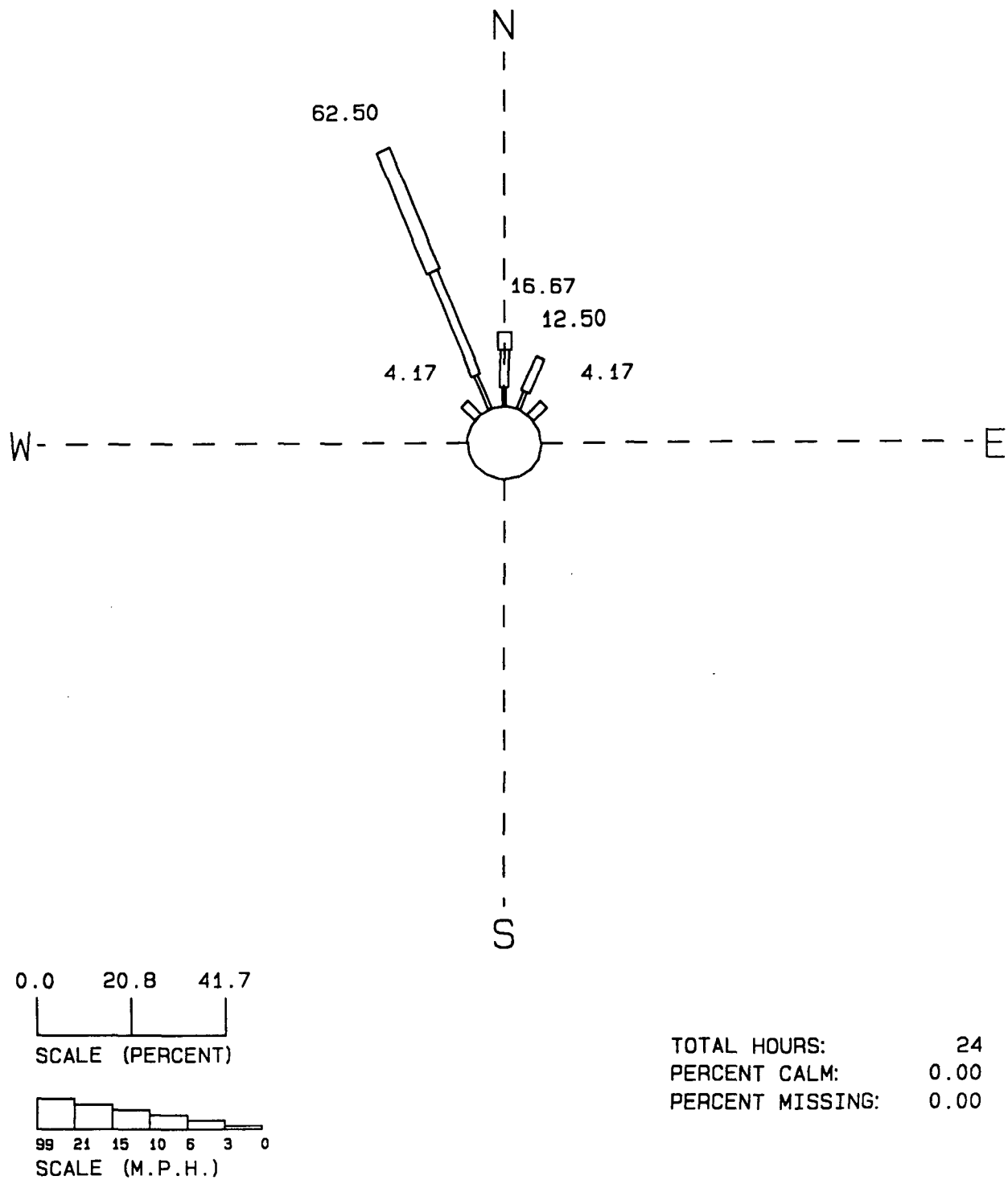

TOTAL HOURS:	24
PERCENT CALM:	0.00
PERCENT MISSING:	0.00

NEW BEDFORD HARBOR
24-HOUR WIND ROSE
START DATE: 11 DECEMBER 1989
START HOUR: 0900

TOTAL HOURS - 24
PERCENT CALM - .00
PERCENT MISSING - .00

WIND DIRECTION	WIND SPEED CATAGORY (MPH) < 3	3 - 6	6 -10	10-15	15 - 21	> 21	TOTAL
N	4.167	8.333	4.167	.000	.000	.000	16.667
NNE	4.167	8.333	.000	.000	.000	.000	12.500
NE	.000	4.167	.000	.000	.000	.000	4.167
ENE	.000	.000	.000	.000	.000	.000	.000
E	.000	.000	.000	.000	.000	.000	.000
ESE	.000	.000	.000	.000	.000	.000	.000
SE	.000	.000	.000	.000	.000	.000	.000
SSE	.000	.000	.000	.000	.000	.000	.000
S	.000	.000	.000	.000	.000	.000	.000
SSW	.000	.000	.000	.000	.000	.000	.000
SW	.000	.000	.000	.000	.000	.000	.000
WSW	.000	.000	.000	.000	.000	.000	.000
W	.000	.000	.000	.000	.000	.000	.000
WNW	.000	.000	.000	.000	.000	.000	.000
NW	.000	4.167	.000	.000	.000	.000	4.167
NNW	8.333	25.000	29.167	.000	.000	.000	62.500
ALL	16.667	50.000	33.333	.000	.000	.000	100.000

NEW BEDFORD HARBOR
24-HOUR WIND ROSE
START DATE: 12 DECEMBER 1989
START HOUR: 0900

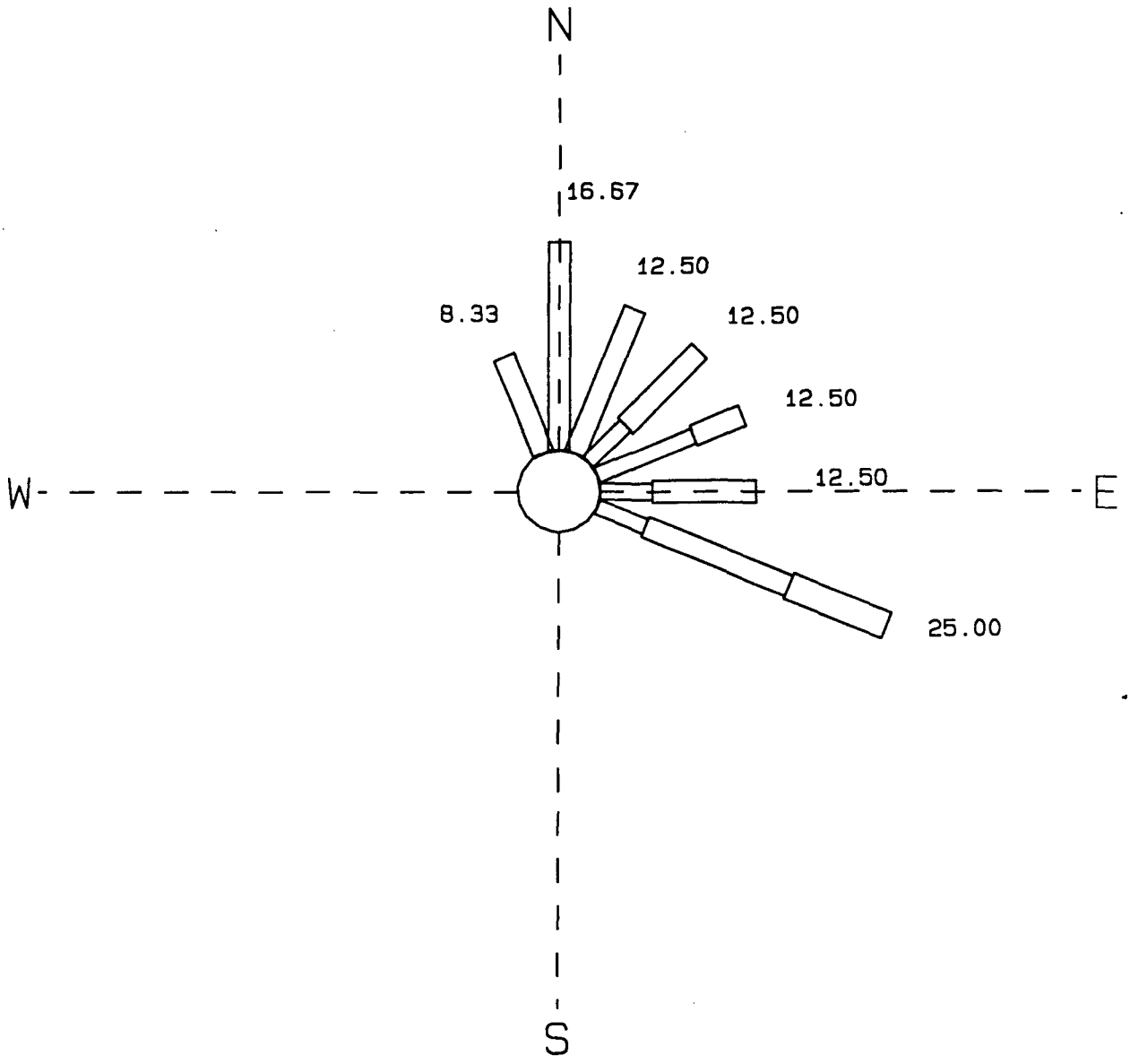

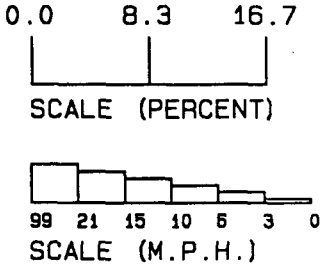

TOTAL HOURS:	24
PERCENT CALM:	0.00
PERCENT MISSING:	0.00

NEW BEDFORD HARBOR
24-HOUR WIND ROSE
START DATE: 12 DECEMBER 1989
START HOUR: 0900

TOTAL HOURS - 24
PERCENT CALM - .00
PERCENT MISSING - .00

WIND DIRECTION	WIND SPEED CATAGORY (MPH) < 3	3 - 6	6 -10	10-15	15 - 21	> 21	TOTAL
N	.000	.000	.000	16.667	.000	.000	16.667
NNE	.000	.000	.000	12.500	.000	.000	12.500
NE	.000	.000	4.167	8.333	.000	.000	12.500
ENE	.000	.000	8.333	4.167	.000	.000	12.500
E	.000	.000	4.167	8.333	.000	.000	12.500
ESE	.000	.000	4.167	12.500	8.333	.000	25.000
SE	.000	.000	.000	.000	.000	.000	.000
SSE	.000	.000	.000	.000	.000	.000	.000
S	.000	.000	.000	.000	.000	.000	.000
SSW	.000	.000	.000	.000	.000	.000	.000
SW	.000	.000	.000	.000	.000	.000	.000
WSW	.000	.000	.000	.000	.000	.000	.000
W	.000	.000	.000	.000	.000	.000	.000
WNW	.000	.000	.000	.000	.000	.000	.000
NW	.000	.000	.000	.000	.000	.000	.000
NNW	.000	.000	.000	8.333	.000	.000	8.333
ALL	.000	.000	20.833	70.833	8.333	.000	100.000

NEW BEDFORD HARBOR
24-HOUR WIND ROSE
START DATE: 13 DECEMBER 1989
START HOUR: 0900

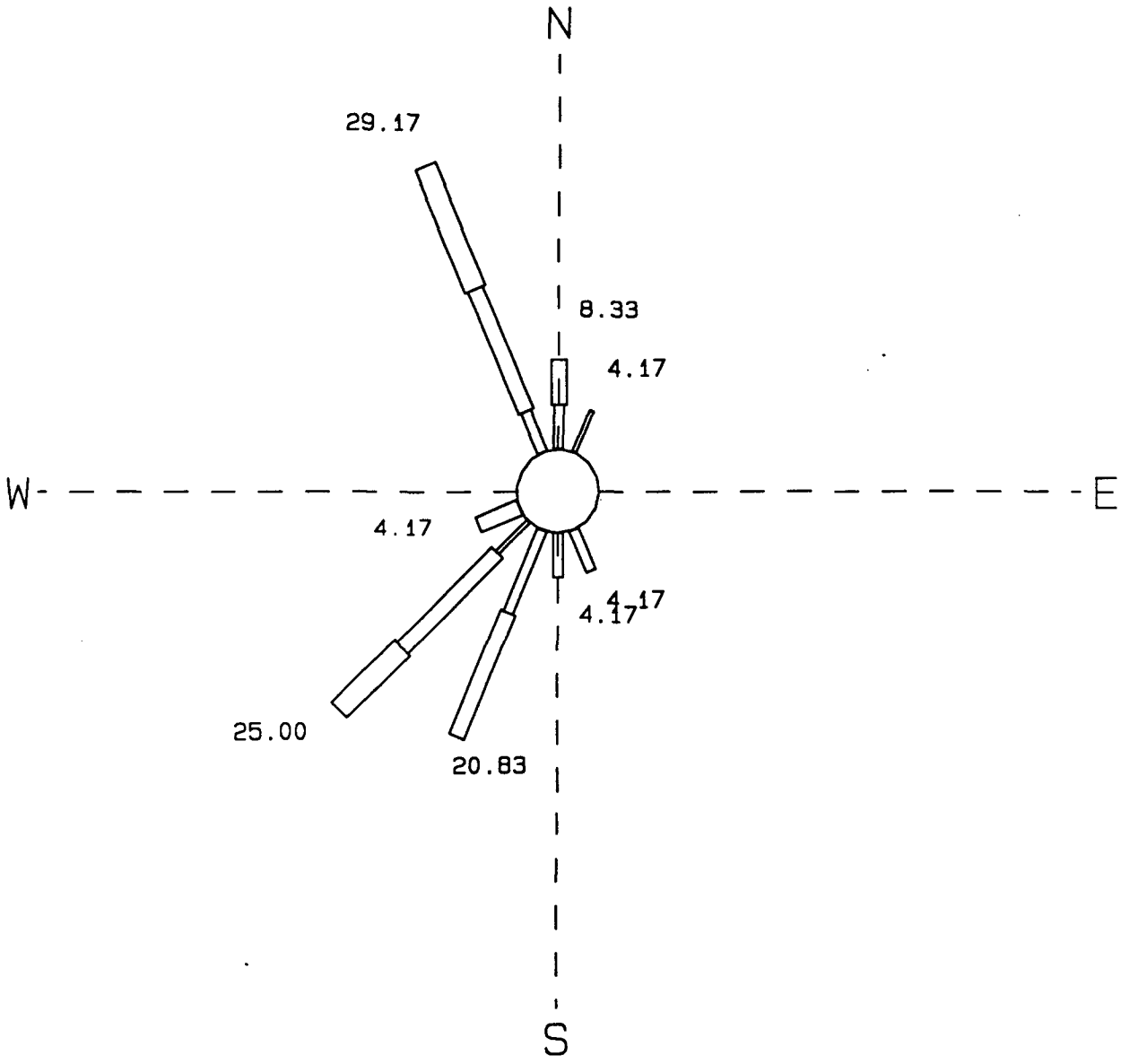

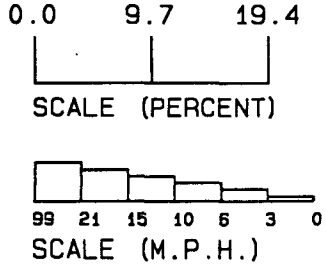

TOTAL HOURS:	24
PERCENT CALM:	0.00
PERCENT MISSING:	0.00

NEW BEDFORD HARBOR
24-HOUR WIND ROSE
START DATE: 13 DECEMBER 1989
START HOUR: 0900

TOTAL HOURS - 24
PERCENT CALM - .00
PERCENT MISSING - .00

WIND DIRECTION	WIND SPEED CATAGORY (MPH) < 3	3 - 6	6 -10	10-15	15 - 21	> 21	TOTAL
N	.000	4.167	4.167	.000	.000	.000	8.333
NNE	4.167	.000	.000	.000	.000	.000	4.167
NE	.000	.000	.000	.000	.000	.000	.000
ENE	.000	.000	.000	.000	.000	.000	.000
E	.000	.000	.000	.000	.000	.000	.000
ESE	.000	.000	.000	.000	.000	.000	.000
SE	.000	.000	.000	.000	.000	.000	.000
SSE	.000	4.167	.000	.000	.000	.000	4.167
S	.000	4.167	.000	.000	.000	.000	4.167
SSW	.000	8.333	12.500	.000	.000	.000	20.833
SW	4.167	.000	12.500	8.333	.000	.000	25.000
WSW	.000	.000	4.167	.000	.000	.000	4.167
W	.000	.000	.000	.000	.000	.000	.000
WNW	.000	.000	.000	.000	.000	.000	.000
NW	.000	.000	.000	.000	.000	.000	.000
NNW	.000	4.167	12.500	12.500	.000	.000	29.167
ALL	8.333	25.000	45.833	20.833	.000	.000	100.000

NEW BEDFORD HARBOR
24-HOUR WIND ROSE
START DATE: 16 DECEMBER 1989
START HOUR: 0900

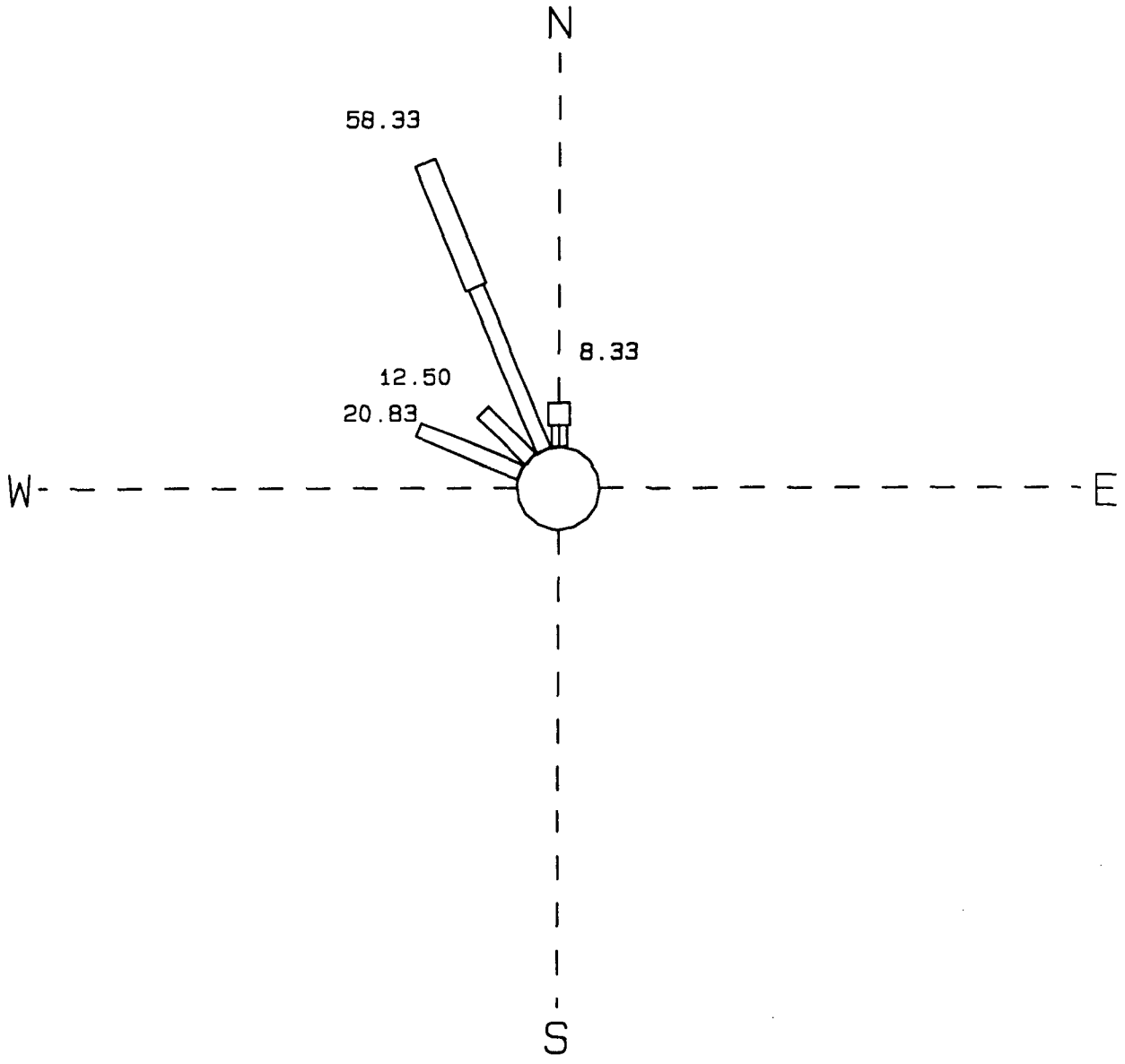

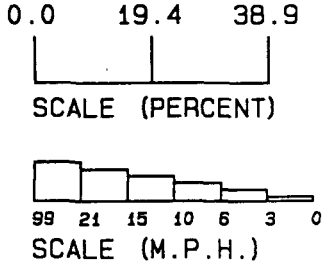

TOTAL HOURS:	24
PERCENT CALM:	0.00
PERCENT MISSING:	0.00

NEW BEDFORD HARBOR
24-HOUR WIND ROSE
START DATE: 16 DECEMBER 1989
START HOUR: 0900

TOTAL HOURS - 24
PERCENT CALM - .00
PERCENT MISSING - .00

WIND DIRECTION	WIND SPEED CATAGORY (MPH) < 3	3 - 6	6 -10	10-15	15 - 21	> 21	TOTAL
N	.000	.000	4.167	4.167	.000	.000	8.333
NNE	.000	.000	.000	.000	.000	.000	.000
NE	.000	.000	.000	.000	.000	.000	.000
ENE	.000	.000	.000	.000	.000	.000	.000
E	.000	.000	.000	.000	.000	.000	.000
ESE	.000	.000	.000	.000	.000	.000	.000
SE	.000	.000	.000	.000	.000	.000	.000
SSE	.000	.000	.000	.000	.000	.000	.000
S	.000	.000	.000	.000	.000	.000	.000
SSW	.000	.000	.000	.000	.000	.000	.000
SW	.000	.000	.000	.000	.000	.000	.000
WSW	.000	.000	.000	.000	.000	.000	.000
W	.000	.000	.000	.000	.000	.000	.000
WNW	.000	.000	20.833	.000	.000	.000	20.833
NW	.000	.000	12.500	.000	.000	.000	12.500
NNW	.000	.000	33.333	25.000	.000	.000	58.333
ALL	.000	.000	70.833	29.167	.000	.000	100.000

NEW BEDFORD HARBOR
24-HOUR WIND ROSE
START DATE: 17 DECEMBER 1989
START HOUR: 0900

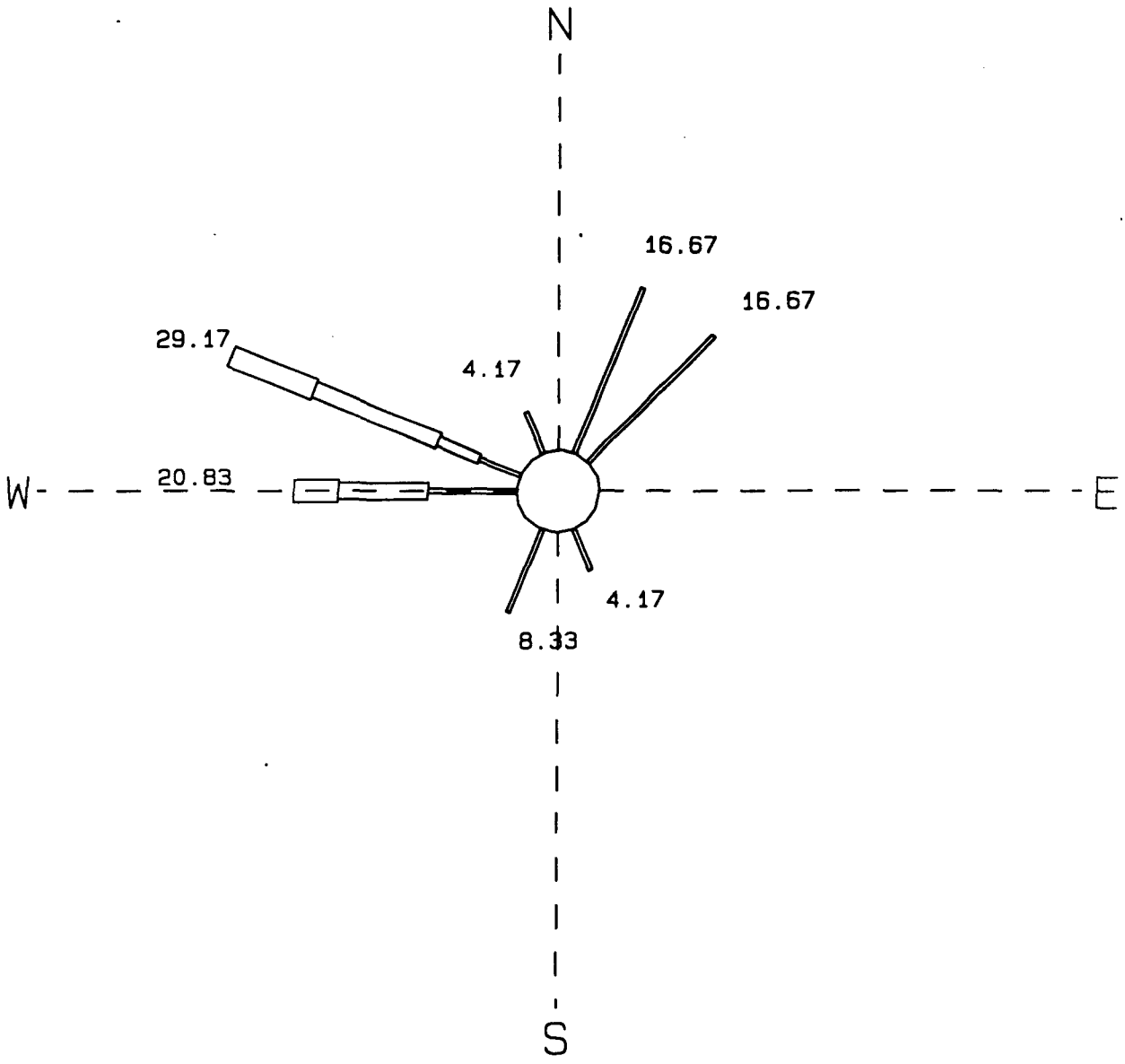

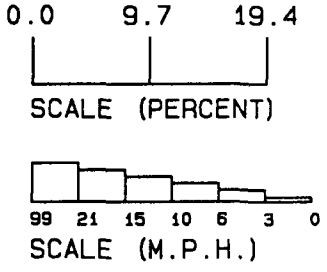

TOTAL HOURS:	24
PERCENT CALM:	0.00
PERCENT MISSING:	0.00

NEW BEDFORD HARBOR
24-HOUR WIND ROSE
START DATE: 17 DECEMBER 1989
START HOUR: 0900

TOTAL HOURS - 24
PERCENT CALM - .00
PERCENT MISSING - .00

WIND DIRECTION	WIND SPEED CATAGORY (MPH) < 3	3 - 6	6 -10	10-15	15 - 21	> 21	TOTAL
N	.000	.000	.000	.000	.000	.000	.000
NNE	16.667	.000	.000	.000	.000	.000	16.667
NE	16.667	.000	.000	.000	.000	.000	16.667
ENE	.000	.000	.000	.000	.000	.000	.000
E	.000	.000	.000	.000	.000	.000	.000
ESE	.000	.000	.000	.000	.000	.000	.000
SE	.000	.000	.000	.000	.000	.000	.000
SSE	4.167	.000	.000	.000	.000	.000	4.167
S	.000	.000	.000	.000	.000	.000	.000
SSW	8.333	.000	.000	.000	.000	.000	8.333
SW	.000	.000	.000	.000	.000	.000	.000
WSW	.000	.000	.000	.000	.000	.000	.000
W	8.333	.000	8.333	4.167	.000	.000	20.833
WNW	4.167	4.167	12.500	8.333	.000	.000	29.167
NW	.000	.000	.000	.000	.000	.000	.000
NNW	4.167	.000	.000	.000	.000	.000	4.167
ALL	62.500	4.167	20.833	12.500	.000	.000	100.000

NEW BEDFORD HARBOR
24-HOUR WIND ROSE
START DATE: 18 DECEMBER 1989
START HOUR: 0900

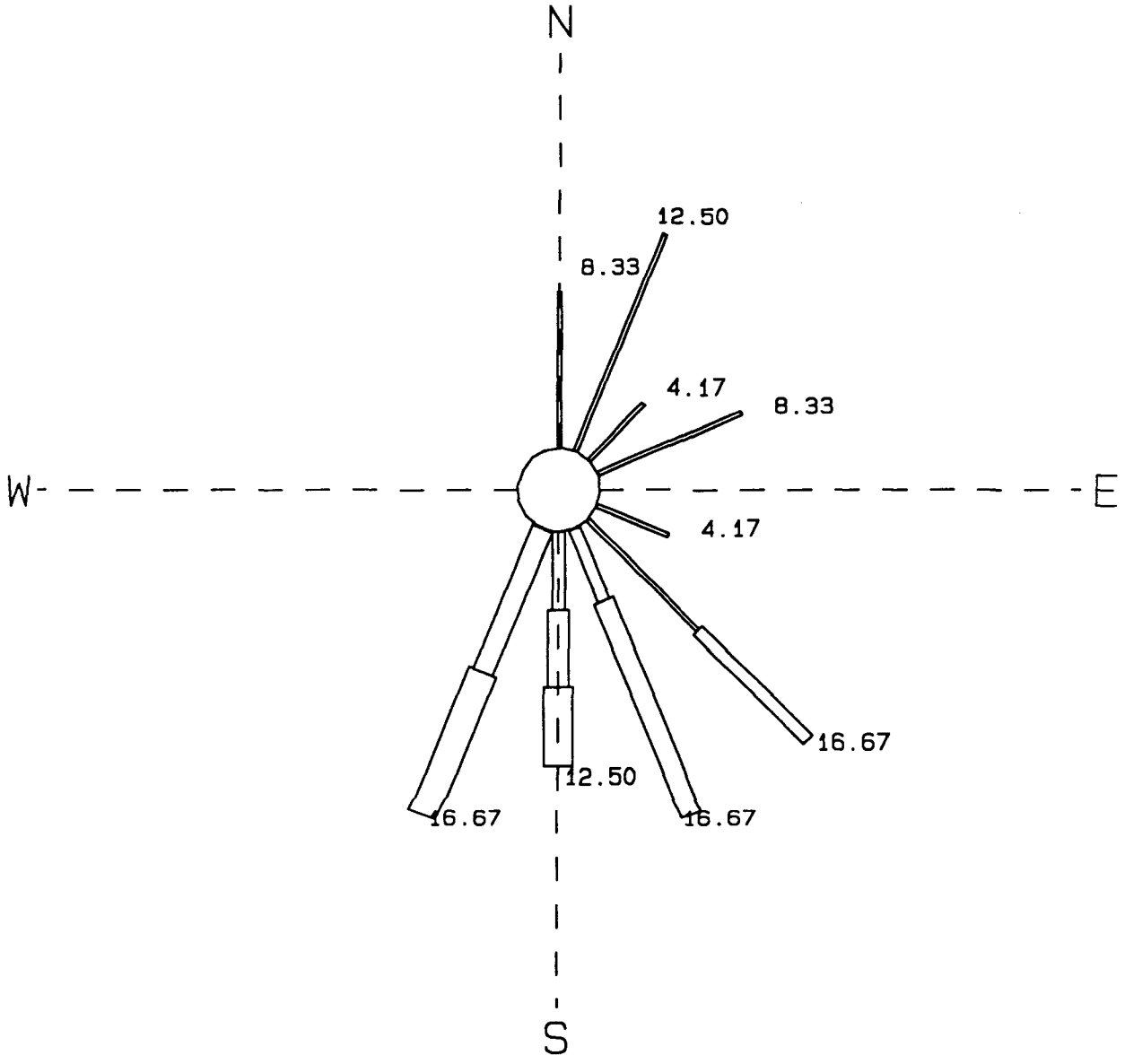

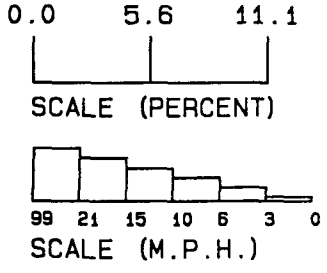

TOTAL HOURS:	24
PERCENT CALM:	0.00
PERCENT MISSING:	0.00

NEW BEDFORD HARBOR
24-HOUR WIND ROSE
START DATE: 18 DECEMBER 1989
START HOUR: 0900

TOTAL HOURS - 24
PERCENT CALM - .00
PERCENT MISSING - .00

WIND DIRECTION	WIND SPEED CATAGORY (MPH) < 3	3 - 6	6 -10	10-15	15 - 21	> 21	TOTAL
N	8.333	.000	.000	.000	.000	.000	8.333
NNE	12.500	.000	.000	.000	.000	.000	12.500
NE	4.167	.000	.000	.000	.000	.000	4.167
ENE	8.333	.000	.000	.000	.000	.000	8.333
E	.000	.000	.000	.000	.000	.000	.000
ESE	4.167	.000	.000	.000	.000	.000	4.167
SE	8.333	8.333	.000	.000	.000	.000	16.667
SSE	.000	4.167	12.500	.000	.000	.000	16.667
S	.000	4.167	4.167	4.167	.000	.000	12.500
SSW	.000	.000	8.333	8.333	.000	.000	16.667
SW	.000	.000	.000	.000	.000	.000	.000
WSW	.000	.000	.000	.000	.000	.000	.000
W	.000	.000	.000	.000	.000	.000	.000
WNW	.000	.000	.000	.000	.000	.000	.000
NW	.000	.000	.000	.000	.000	.000	.000
NNW	.000	.000	.000	.000	.000	.000	.000
ALL	45.833	16.667	25.000	12.500	.000	.000	100.000

NEW BEDFORD HARBOR
24-HOUR WIND ROSE
START DATE: 19 DECEMBER 1989
START HOUR: 0900

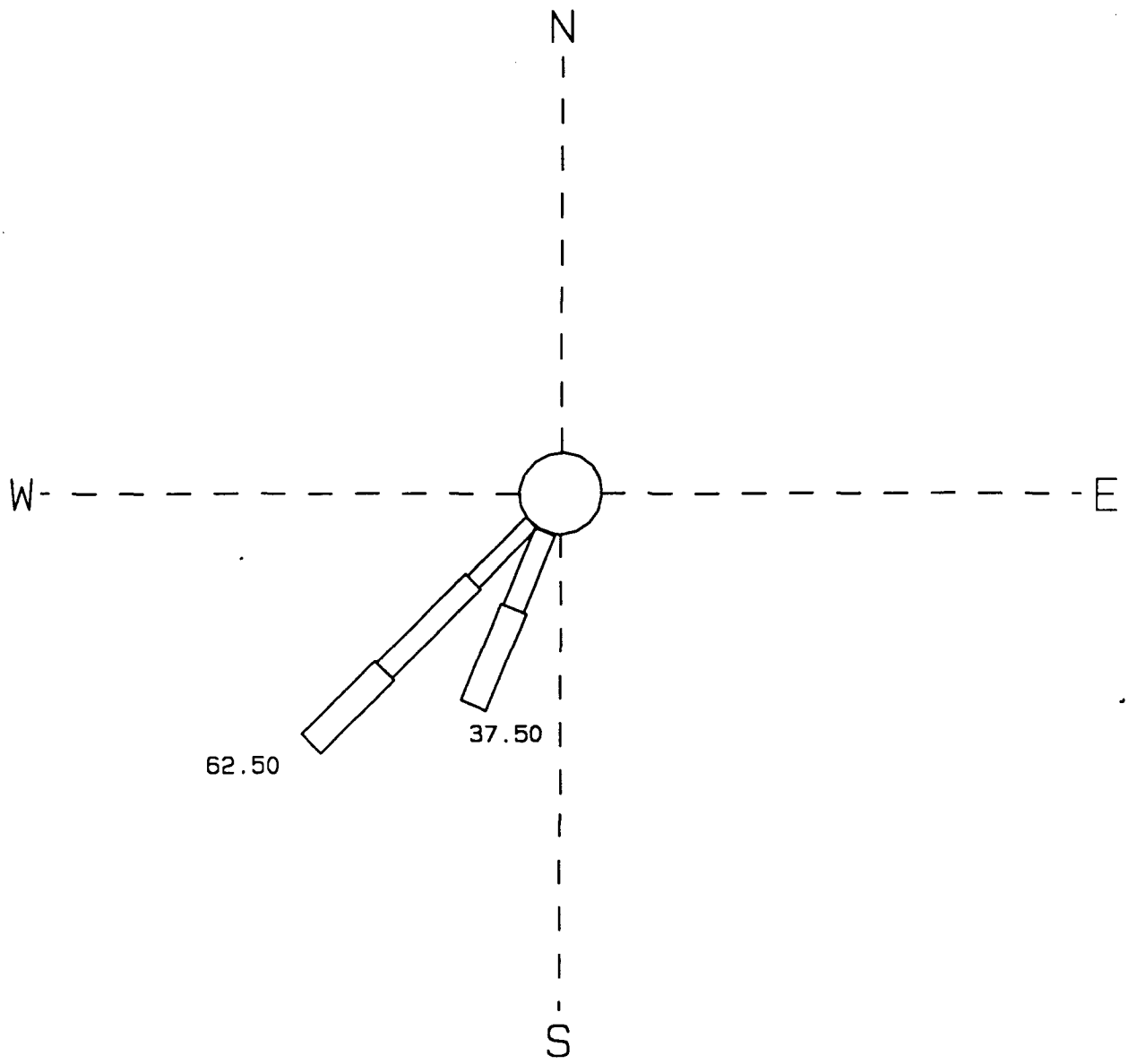

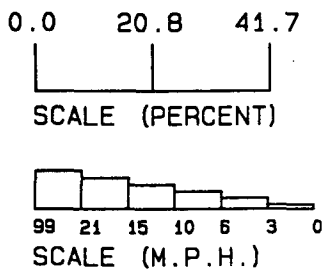

TOTAL HOURS:	24
PERCENT CALM:	0.00
PERCENT MISSING:	0.00

NEW BEDFORD HARBOR
24-HOUR WIND ROSE
START DATE: 19 DECEMBER 1989
START HOUR: 0900

TOTAL HOURS - 24
PERCENT CALM - .00
PERCENT MISSING - .00

WIND DIRECTION	WIND SPEED CATAGORY (MPH) < 3	3 - 6	6 -10	10-15	15 - 21	> 21	TOTAL
N	.000	.000	.000	.000	.000	.000	.000
NNE	.000	.000	.000	.000	.000	.000	.000
NE	.000	.000	.000	.000	.000	.000	.000
ENE	.000	.000	.000	.000	.000	.000	.000
E	.000	.000	.000	.000	.000	.000	.000
ESE	.000	.000	.000	.000	.000	.000	.000
SE	.000	.000	.000	.000	.000	.000	.000
SSE	.000	.000	.000	.000	.000	.000	.000
S	.000	.000	.000	.000	.000	.000	.000
SSW	.000	.000	.000	16.667	20.833	.000	37.500
SW	.000	.000	16.667	25.000	20.833	.000	62.500
WSW	.000	.000	.000	.000	.000	.000	.000
W	.000	.000	.000	.000	.000	.000	.000
WNW	.000	.000	.000	.000	.000	.000	.000
NW	.000	.000	.000	.000	.000	.000	.000
NNW	.000	.000	.000	.000	.000	.000	.000
ALL	.000	.000	16.667	41.667	41.667	.000	100.000

NEW BEDFORD HARBOR
24-HOUR WIND ROSE
START DATE: 21 DECEMBER 1989
START HOUR: 0900

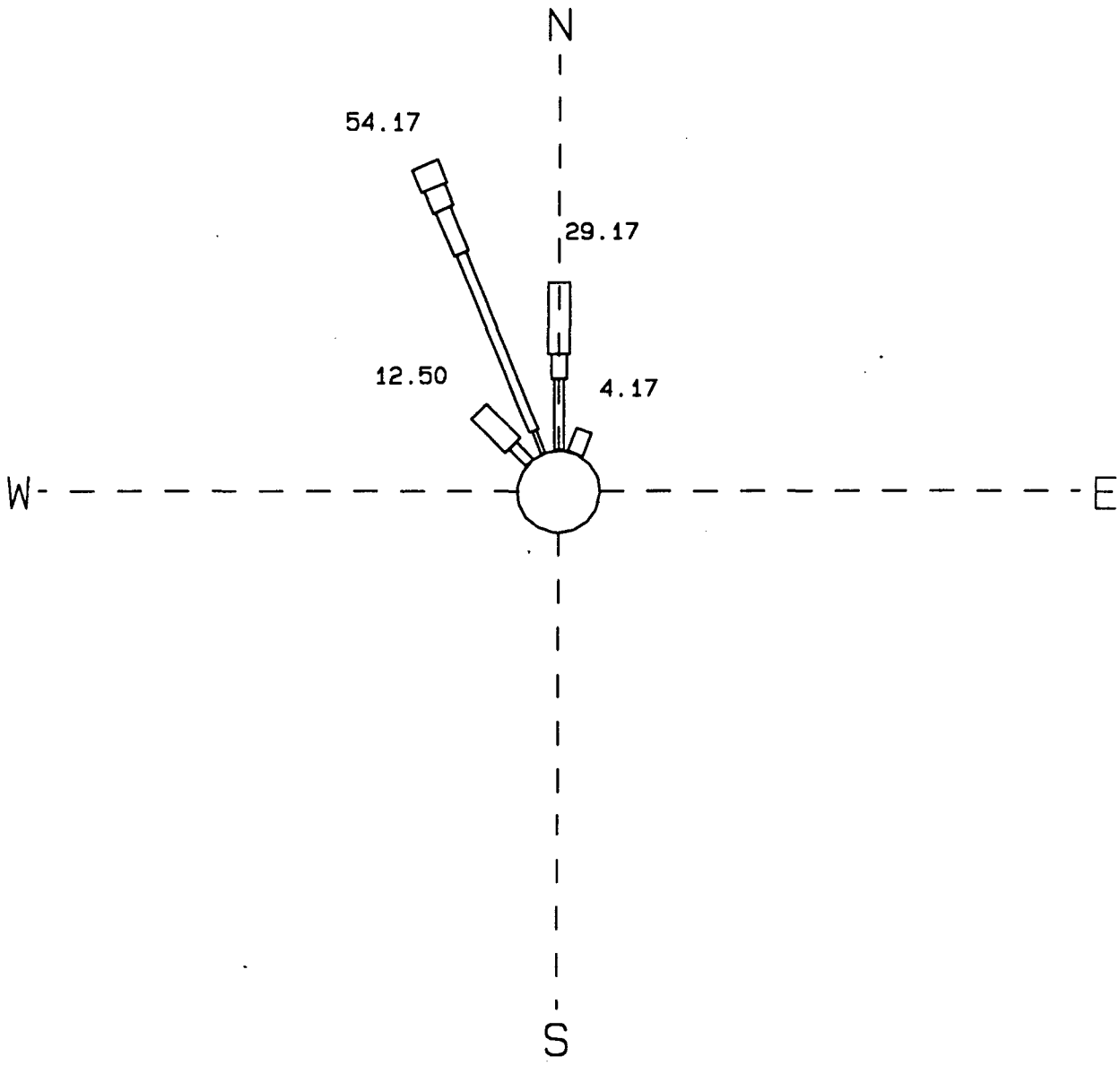

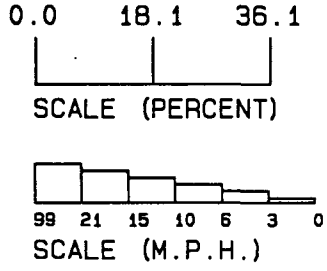

TOTAL HOURS:	24
PERCENT CALM:	0.00
PERCENT MISSING:	0.00

NEW BEDFORD HARBOR
24-HOUR WIND ROSE
START DATE: 21 DECEMBER 1989
START HOUR: 0900

TOTAL HOURS - 24
PERCENT CALM - .00
PERCENT MISSING - .00

WIND DIRECTION	WIND SPEED CATAGORY (MPH) < 3	3 - 6	6 -10	10-15	15 - 21	> 21	TOTAL
N	.000	12.500	4.167	12.500	.000	.000	29.167
NNE	.000	.000	4.167	.000	.000	.000	4.167
NE	.000	.000	.000	.000	.000	.000	.000
ENE	.000	.000	.000	.000	.000	.000	.000
E	.000	.000	.000	.000	.000	.000	.000
ESE	.000	.000	.000	.000	.000	.000	.000
SE	.000	.000	.000	.000	.000	.000	.000
SSE	.000	.000	.000	.000	.000	.000	.000
S	.000	.000	.000	.000	.000	.000	.000
SSW	.000	.000	.000	.000	.000	.000	.000
SW	.000	.000	.000	.000	.000	.000	.000
WSW	.000	.000	.000	.000	.000	.000	.000
W	.000	.000	.000	.000	.000	.000	.000
WNW	.000	.000	.000	.000	.000	.000	.000
NW	.000	4.167	.000	8.333	.000	.000	12.500
NNW	4.167	33.333	8.333	4.167	4.167	.000	54.167
ALL	4.167	50.000	16.667	25.000	4.167	.000	100.000

NEW BEDFORD HARBOR
24-HOUR WIND ROSE
START DATE: 27 DECEMBER 1989
START HOUR: 0900

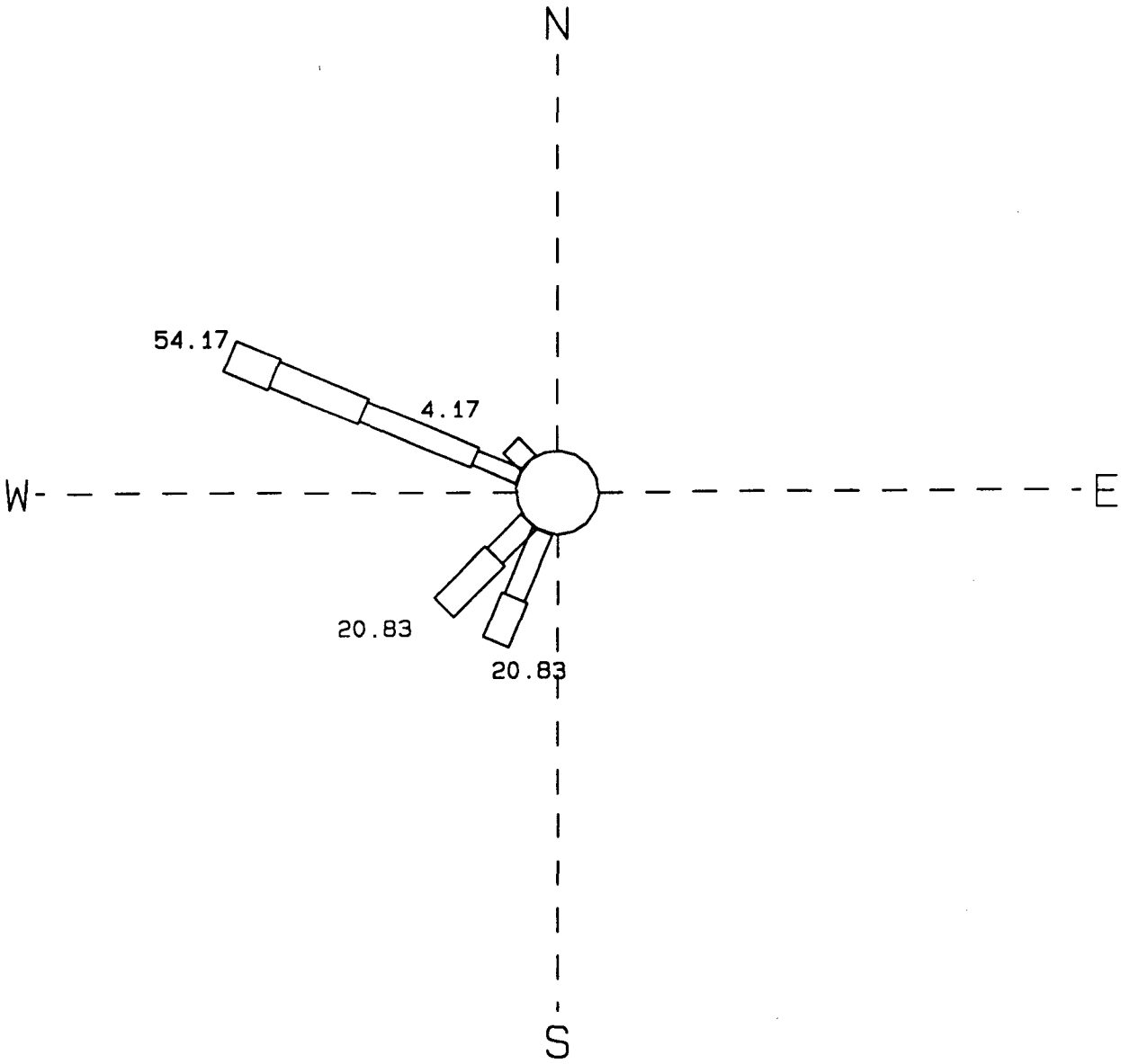

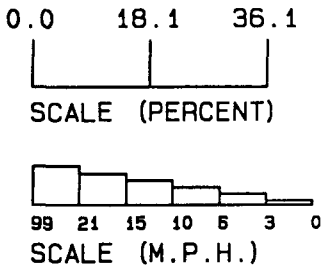

TOTAL HOURS:	24
PERCENT CALM:	0.00
PERCENT MISSING:	0.00

NEW BEDFORD HARBOR
24-HOUR WIND ROSE
START DATE: 27 DECEMBER 1989
START HOUR: 0900

TOTAL HOURS - 24
PERCENT CALM - .00
PERCENT MISSING - .00

WIND DIRECTION	WIND SPEED CATAGORY (MPH) < 3	3 - 6	6 -10	10-15	15 - 21	> 21	TOTAL
N	.000	.000	.000	.000	.000	.000	.000
NNE	.000	.000	.000	.000	.000	.000	.000
NE	.000	.000	.000	.000	.000	.000	.000
ENE	.000	.000	.000	.000	.000	.000	.000
E	.000	.000	.000	.000	.000	.000	.000
ESE	.000	.000	.000	.000	.000	.000	.000
SE	.000	.000	.000	.000	.000	.000	.000
SSE	.000	.000	.000	.000	.000	.000	.000
S	.000	.000	.000	.000	.000	.000	.000
SSW	.000	.000	.000	12.500	8.333	.000	20.833
SW	.000	.000	.000	8.333	12.500	.000	20.833
WSW	.000	.000	.000	.000	.000	.000	.000
W	.000	.000	.000	.000	.000	.000	.000
WNW	.000	.000	8.333	20.833	16.667	8.333	54.167
NW	.000	.000	.000	4.167	.000	.000	4.167
NNW	.000	.000	.000	.000	.000	.000	.000
ALL	.000	.000	8.333	45.833	37.500	8.333	100.000

NEW BEDFORD HARBOR
24-HOUR WIND ROSE
START DATE: 28 DECEMBER 1989
START HOUR: 0900

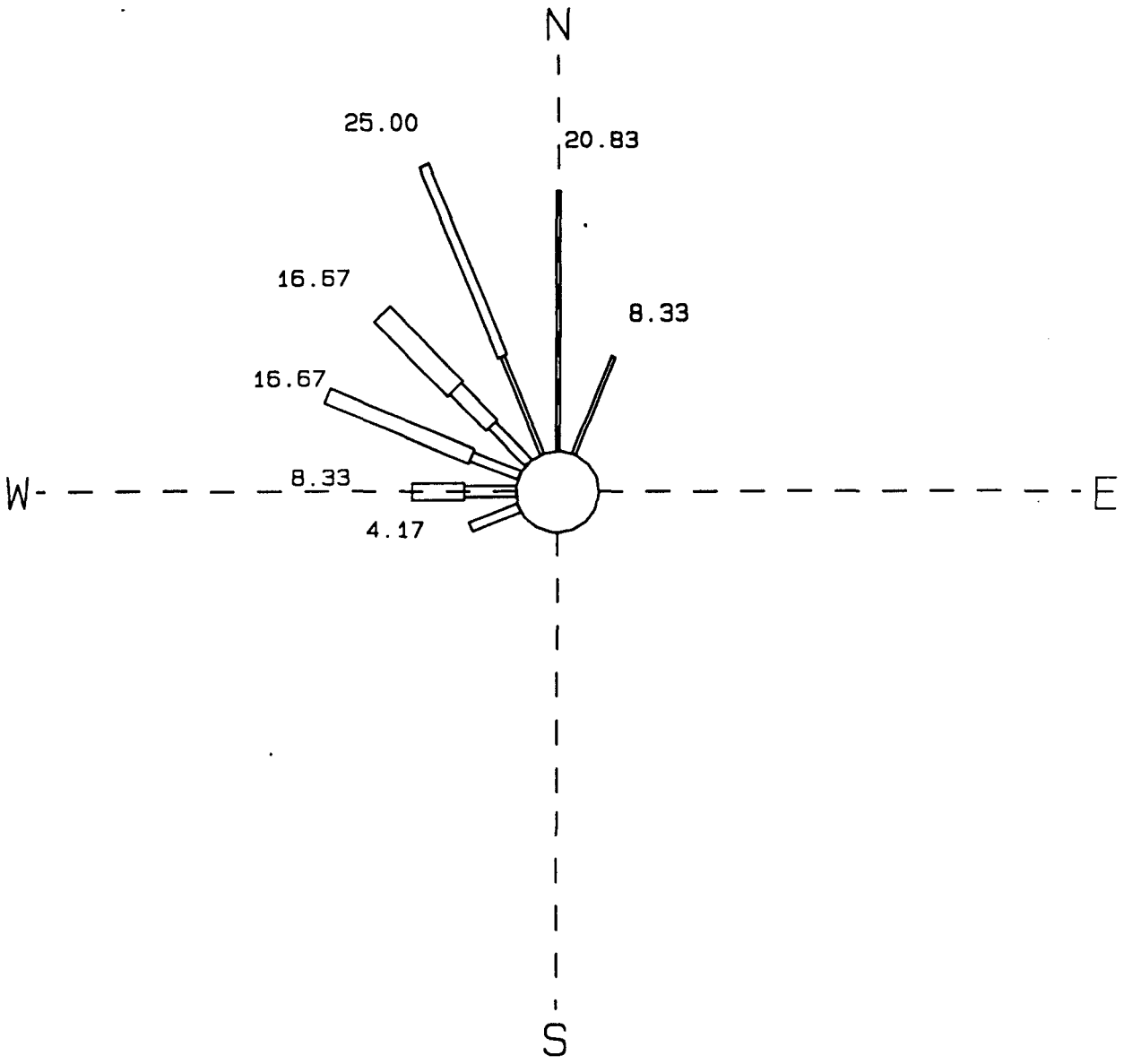

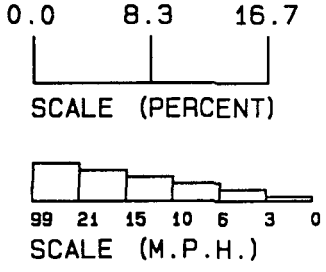

TOTAL HOURS:	24
PERCENT CALM:	0.00
PERCENT MISSING:	0.00

NEW BEDFORD HARBOR
24-HOUR WIND ROSE
START DATE: 28 DECEMBER 1989
START HOUR: 0900

TOTAL HOURS - 24
PERCENT CALM - .00
PERCENT MISSING - .00

WIND DIRECTION	WIND SPEED CATAGORY (MPH) < 3	3 - 6	6 -10	10-15	15 - 21	> 21	TOTAL
N	20.833	.000	.000	.000	.000	.000	20.833
NNE	8.333	.000	.000	.000	.000	.000	8.333
NE	.000	.000	.000	.000	.000	.000	.000
ENE	.000	.000	.000	.000	.000	.000	.000
E	.000	.000	.000	.000	.000	.000	.000
ESE	.000	.000	.000	.000	.000	.000	.000
SE	.000	.000	.000	.000	.000	.000	.000
SSE	.000	.000	.000	.000	.000	.000	.000
S	.000	.000	.000	.000	.000	.000	.000
SSW	.000	.000	.000	.000	.000	.000	.000
SW	.000	.000	.000	.000	.000	.000	.000
WSW	.000	4.167	.000	.000	.000	.000	4.167
W	.000	4.167	4.167	.000	.000	.000	8.333
WNW	.000	4.167	12.500	.000	.000	.000	16.667
NW	.000	4.167	4.167	8.333	.000	.000	16.667
NNW	8.333	16.667	.000	.000	.000	.000	25.000
ALL	37.500	33.333	20.833	8.333	.000	.000	100.000

NEW BEDFORD HARBOR
24-HOUR WIND ROSE
START DATE: 29 DECEMBER 1989
START HOUR: 0900

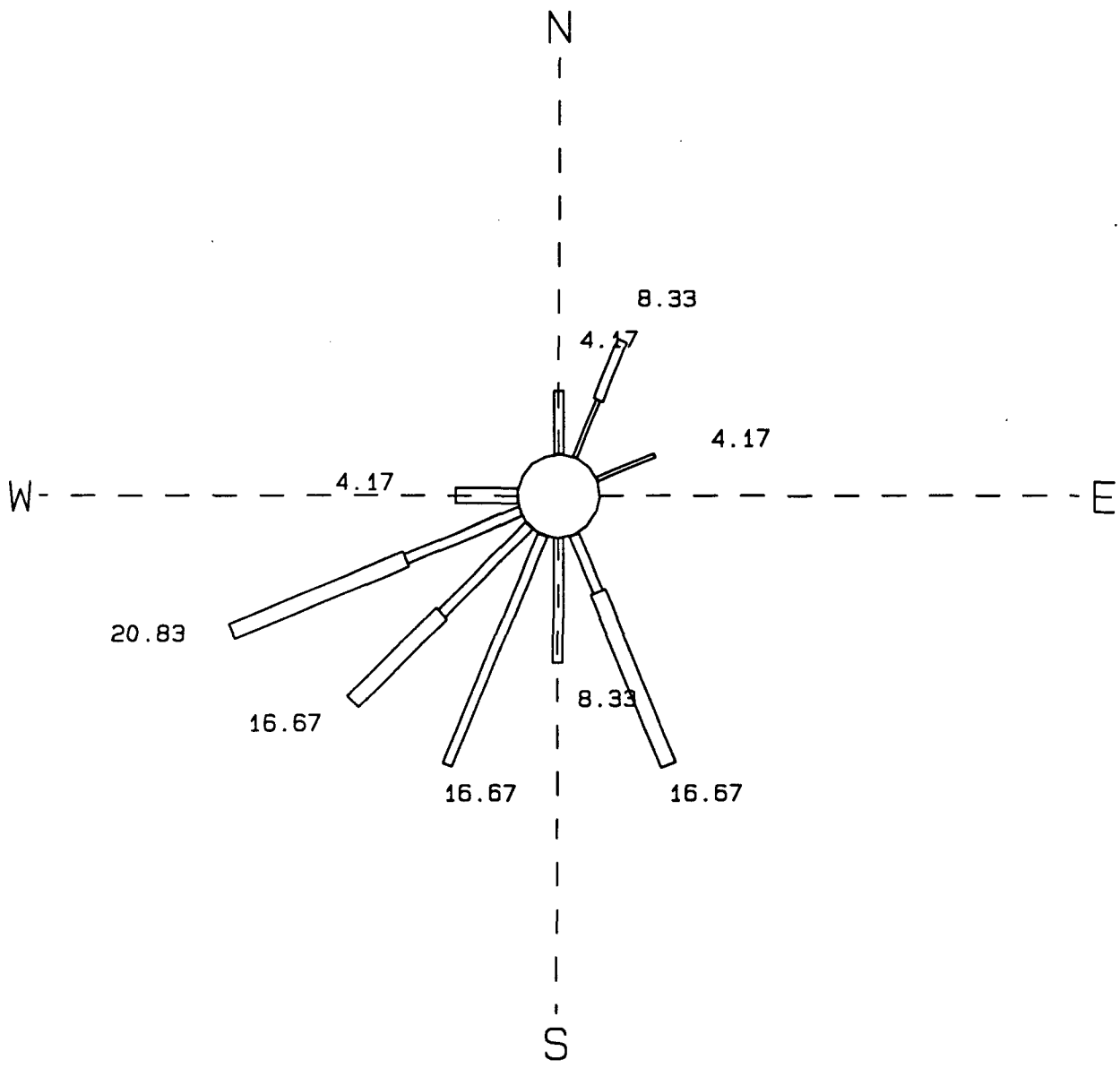

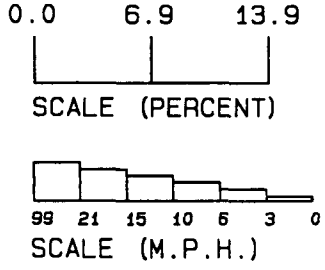

TOTAL HOURS:	24
PERCENT CALM:	0.00
PERCENT MISSING:	0.00

NEW BEDFORD HARBOR
24-HOUR WIND ROSE
START DATE: 29 DECEMBER 1989
START HOUR: 0900

TOTAL HOURS - 24
PERCENT CALM - .00
PERCENT MISSING - .00

WIND DIRECTION	WIND SPEED CATAGORY (MPH) < 3	3 - 6	6 -10	10-15	15 - 21	> 21	TOTAL
N	.000	4.167	.000	.000	.000	.000	4.167
NNE	4.167	4.167	.000	.000	.000	.000	8.333
NE	.000	.000	.000	.000	.000	.000	.000
ENE	4.167	.000	.000	.000	.000	.000	4.167
E	.000	.000	.000	.000	.000	.000	.000
ESE	.000	.000	.000	.000	.000	.000	.000
SE	.000	.000	.000	.000	.000	.000	.000
SSE	.000	4.167	12.500	.000	.000	.000	16.667
S	.000	8.333	.000	.000	.000	.000	8.333
SSW	.000	16.667	.000	.000	.000	.000	16.667
SW	.000	8.333	8.333	.000	.000	.000	16.667
WSW	.000	8.333	12.500	.000	.000	.000	20.833
W	.000	.000	4.167	.000	.000	.000	4.167
WNW	.000	.000	.000	.000	.000	.000	.000
NW	.000	.000	.000	.000	.000	.000	.000
NNW	.000	.000	.000	.000	.000	.000	.000
ALL	8.333	54.167	37.500	.000	.000	.000	100.000

NEW BEDFORD HARBOR
24-HOUR WIND ROSE
START DATE: 7 JANUARY 1989
START HOUR: 0900

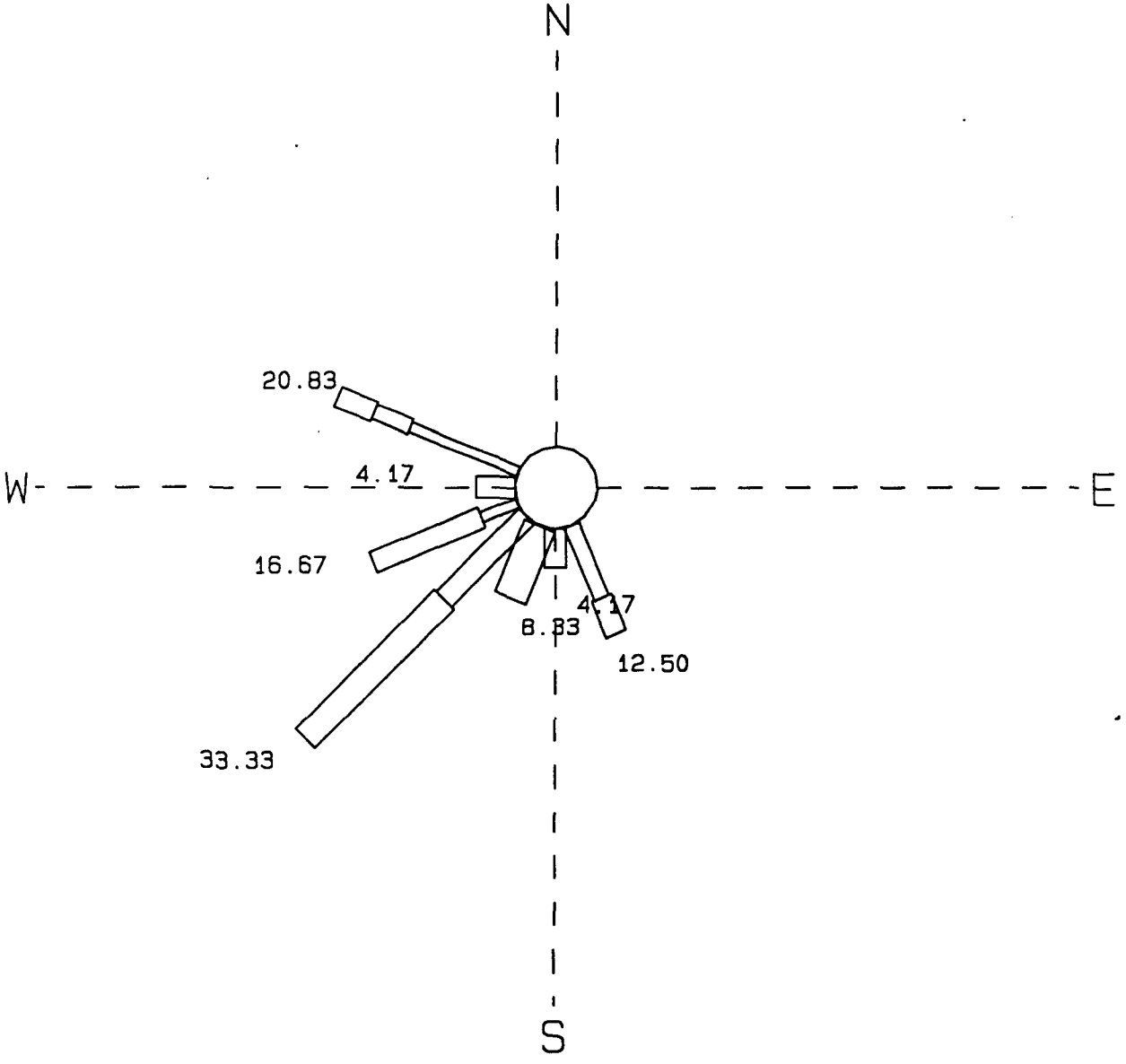

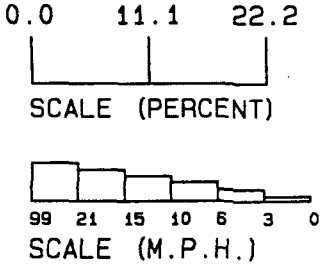

TOTAL HOURS:	24
PERCENT CALM:	0.00
PERCENT MISSING:	0.00

NEW BEDFORD HARBOR
24-HOUR WIND ROSE
START DATE: 7 JANUARY 1989
START HOUR: 0900

TOTAL HOURS - 24
PERCENT CALM - .00
PERCENT MISSING - .00

WIND DIRECTION	WIND SPEED CATAGORY (MPH) < 3	3 - 6	6 -10	10-15	15 - 21	> 21	TOTAL
N	.000	.000	.000	.000	.000	.000	.000
NNE	.000	.000	.000	.000	.000	.000	.000
NE	.000	.000	.000	.000	.000	.000	.000
ENE	.000	.000	.000	.000	.000	.000	.000
E	.000	.000	.000	.000	.000	.000	.000
ESE	.000	.000	.000	.000	.000	.000	.000
SE	.000	.000	.000	.000	.000	.000	.000
SSE	.000	.000	8.333	4.167	.000	.000	12.500
S	.000	.000	.000	4.167	.000	.000	4.167
SSW	.000	.000	.000	.000	.000	8.333	8.333
SW	.000	.000	.000	12.500	20.833	.000	33.333
WSW	.000	4.167	.000	12.500	.000	.000	16.667
W	.000	.000	.000	4.167	.000	.000	4.167
WNW	.000	12.500	4.167	4.167	.000	.000	20.833
NW	.000	.000	.000	.000	.000	.000	.000
NNW	.000	.000	.000	.000	.000	.000	.000
ALL	.000	16.667	12.500	41.667	20.833	8.333	100.000

NEW BEDFORD HARBOR
24-HOUR WIND ROSE
START DATE: 8 JANUARY 1989
START HOUR: 0900

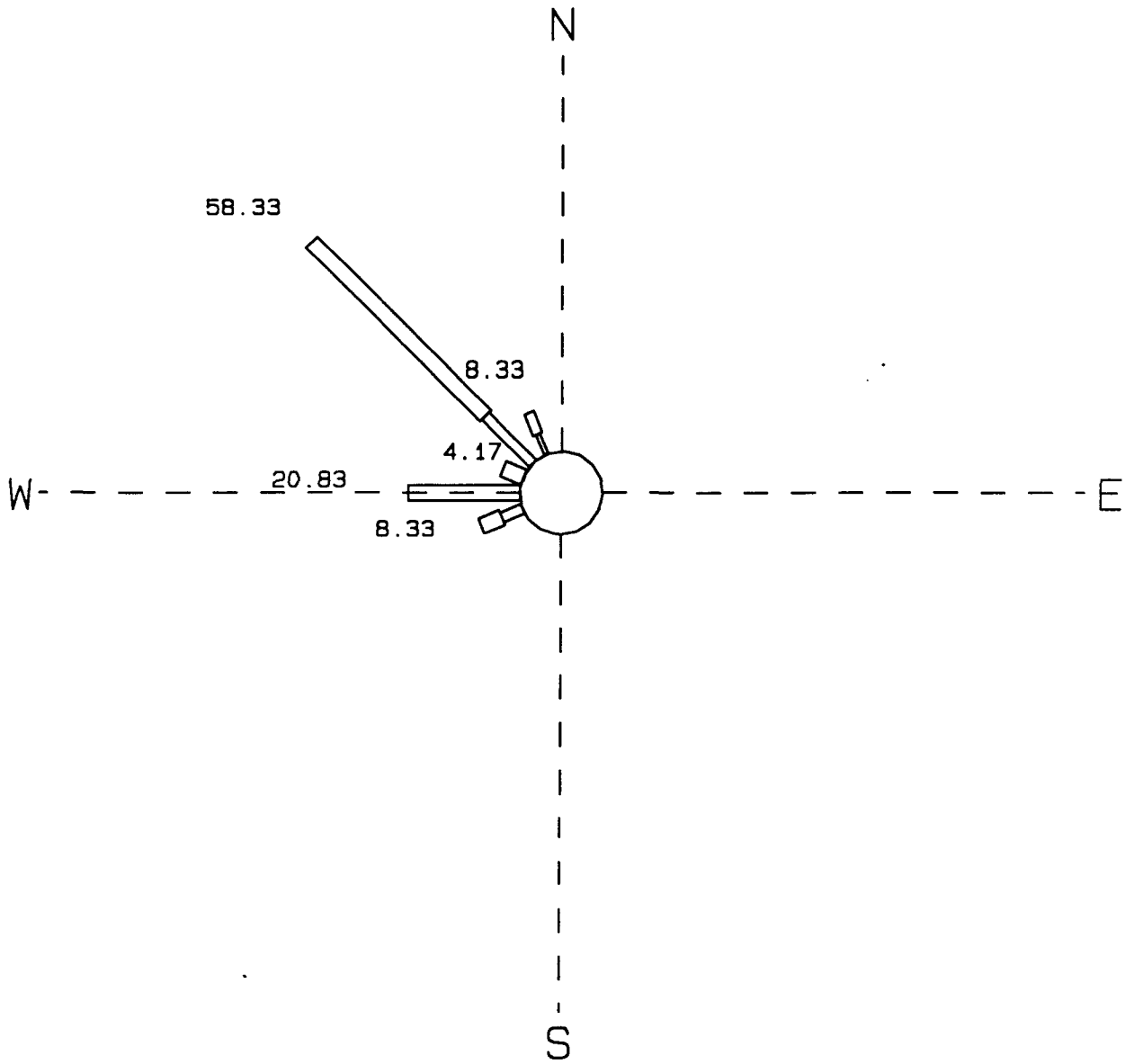

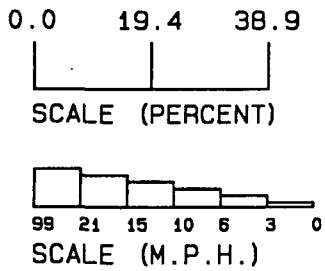

TOTAL HOURS:	24
PERCENT CALM:	0.00
PERCENT MISSING:	0.00

NEW BEDFORD HARBOR
24-HOUR WIND ROSE
START DATE: 8 JANUARY 1989
START HOUR: 0900

TOTAL HOURS - 24
PERCENT CALM - .00
PERCENT MISSING - .00

WIND DIRECTION	WIND SPEED CATAGORY (MPH) < 3	3 - 6	6 -10	10-15	15 - 21	> 21	TOTAL
N	.000	.000	.000	.000	.000	.000	.000
NNE	.000	.000	.000	.000	.000	.000	.000
NE	.000	.000	.000	.000	.000	.000	.000
ENE	.000	.000	.000	.000	.000	.000	.000
E	.000	.000	.000	.000	.000	.000	.000
ESE	.000	.000	.000	.000	.000	.000	.000
SE	.000	.000	.000	.000	.000	.000	.000
SSE	.000	.000	.000	.000	.000	.000	.000
S	.000	.000	.000	.000	.000	.000	.000
SSW	.000	.000	.000	.000	.000	.000	.000
SW	.000	.000	.000	.000	.000	.000	.000
WSW	.000	4.167	4.167	.000	.000	.000	8.333
W	.000	.000	20.833	.000	.000	.000	20.833
WNW	.000	.000	4.167	.000	.000	.000	4.167
NW	.000	12.500	45.833	.000	.000	.000	58.333
NNW	4.167	4.167	.000	.000	.000	.000	8.333
ALL	4.167	20.833	75.000	.000	.000	.000	100.000

NEW BEDFORD HARBOR
24-HOUR WIND ROSE
START DATE: 9 JANUARY 1989
START HOUR: 0900

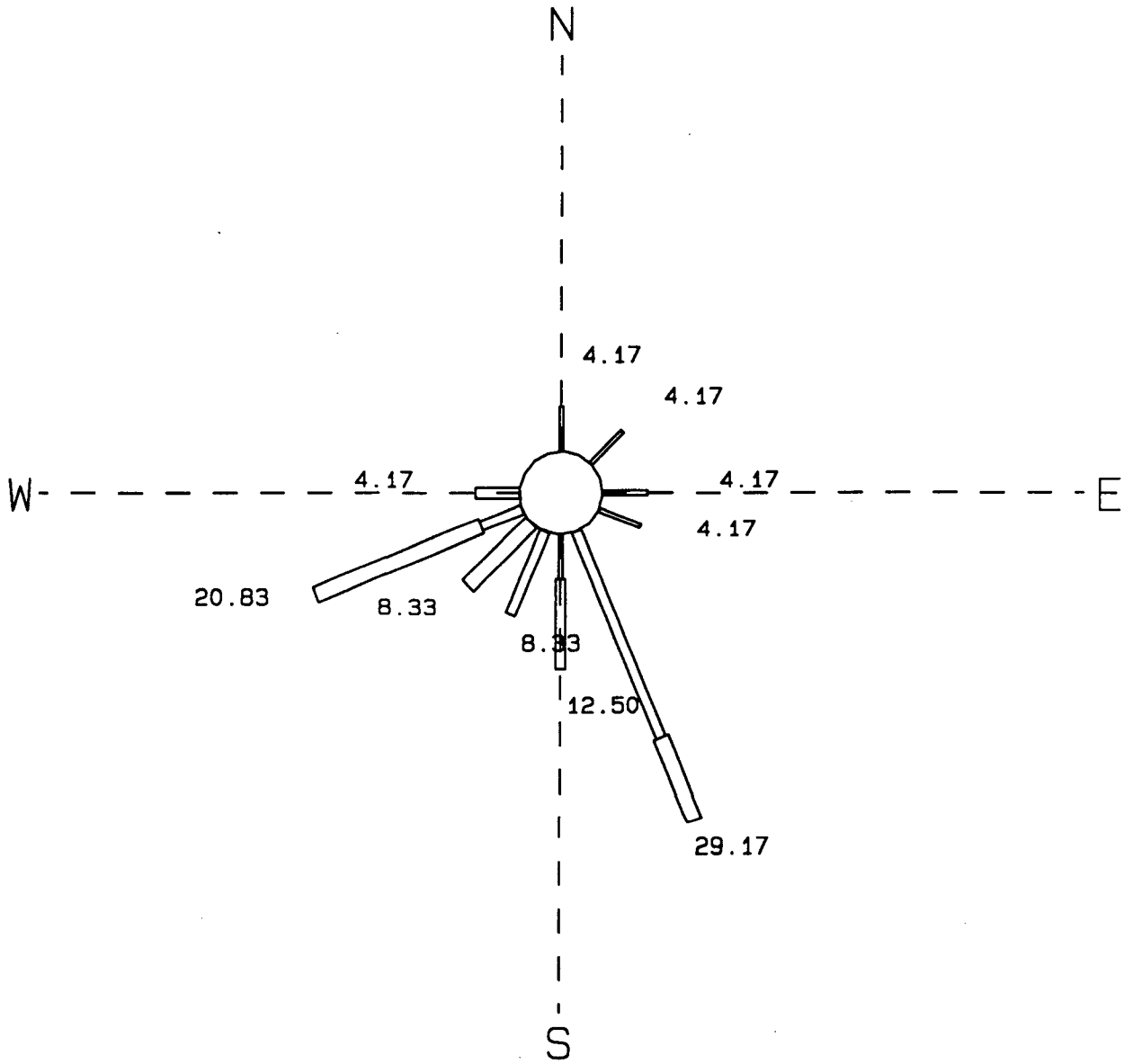

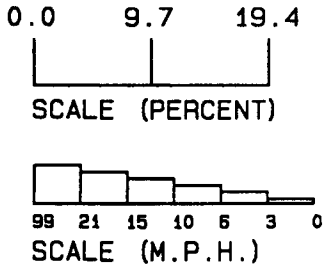

TOTAL HOURS:	24
PERCENT CALM:	0.00
PERCENT MISSING:	0.00

NEW BEDFORD HARBOR
24-HOUR WIND ROSE
START DATE: 9 JANUARY 1989
START HOUR: 0900

TOTAL HOURS - 24
PERCENT CALM - .00
PERCENT MISSING - .00

WIND DIRECTION	WIND SPEED CATAGORY (MPH) < 3	3 - 6	6 -10	10-15	15 - 21	> 21	TOTAL
N	4.167	.000	.000	.000	.000	.000	4.167
NNE	.000	.000	.000	.000	.000	.000	.000
NE	4.167	.000	.000	.000	.000	.000	4.167
ENE	.000	.000	.000	.000	.000	.000	.000
E	4.167	.000	.000	.000	.000	.000	4.167
ESE	4.167	.000	.000	.000	.000	.000	4.167
SE	.000	.000	.000	.000	.000	.000	.000
SSE	.000	20.833	8.333	.000	.000	.000	29.167
S	4.167	8.333	.000	.000	.000	.000	12.500
SSW	.000	8.333	.000	.000	.000	.000	8.333
SW	.000	.000	8.333	.000	.000	.000	8.333
WSW	.000	4.167	16.667	.000	.000	.000	20.833
W	.000	4.167	.000	.000	.000	.000	4.167
WNW	.000	.000	.000	.000	.000	.000	.000
NW	.000	.000	.000	.000	.000	.000	.000
NNW	.000	.000	.000	.000	.000	.000	.000
ALL	20.833	45.833	33.333	.000	.000	.000	100.000

NEW BEDFORD HARBOR
24-HOUR WIND ROSE
START DATE: 10 JANUARY 1989
START HOUR: 0900

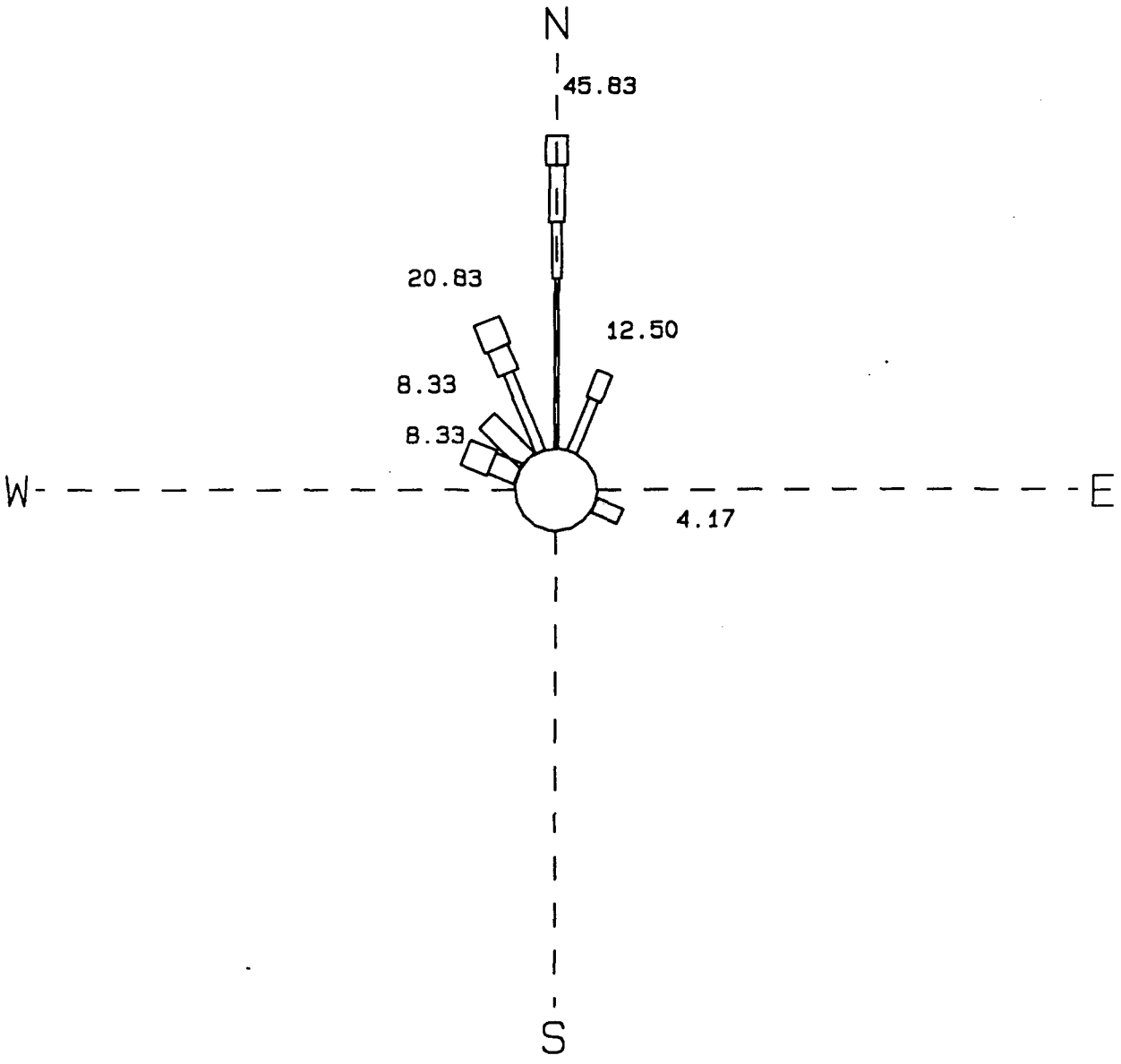

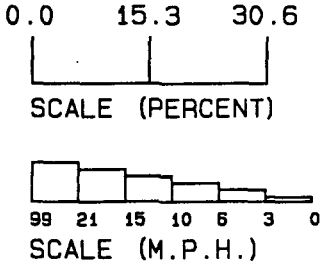

TOTAL HOURS:	24
PERCENT CALM:	0.00
PERCENT MISSING:	0.00

NEW BEDFORD HARBOR
24-HOUR WIND ROSE
START DATE: 10 JANUARY 1989
START HOUR: 0900

TOTAL HOURS - 24
PERCENT CALM - .00
PERCENT MISSING - .00

WIND DIRECTION	WIND SPEED CATAGORY (MPH) < 3	3 - 6	6 -10	10-15	15 - 21	> 21	TOTAL
N	25.000	8.333	8.333	4.167	.000	.000	45.833
NNE	.000	8.333	4.167	.000	.000	.000	12.500
NE	.000	.000	.000	.000	.000	.000	.000
ENE	.000	.000	.000	.000	.000	.000	.000
E	.000	.000	.000	.000	.000	.000	.000
ESE	.000	.000	4.167	.000	.000	.000	4.167
SE	.000	.000	.000	.000	.000	.000	.000
SSE	.000	.000	.000	.000	.000	.000	.000
S	.000	.000	.000	.000	.000	.000	.000
SSW	.000	.000	.000	.000	.000	.000	.000
SW	.000	.000	.000	.000	.000	.000	.000
WSW	.000	.000	.000	.000	.000	.000	.000
W	.000	.000	.000	.000	.000	.000	.000
WNW	.000	.000	.000	4.167	4.167	.000	8.333
NW	.000	.000	.000	8.333	.000	.000	8.333
NNW	.000	12.500	.000	4.167	4.167	.000	20.833
ALL	25.000	29.167	16.667	20.833	8.333	.000	100.000

NEW BEDFORD HARBOR
24-HOUR WIND ROSE
START DATE: 11 JANUARY 1989
START HOUR: 0900

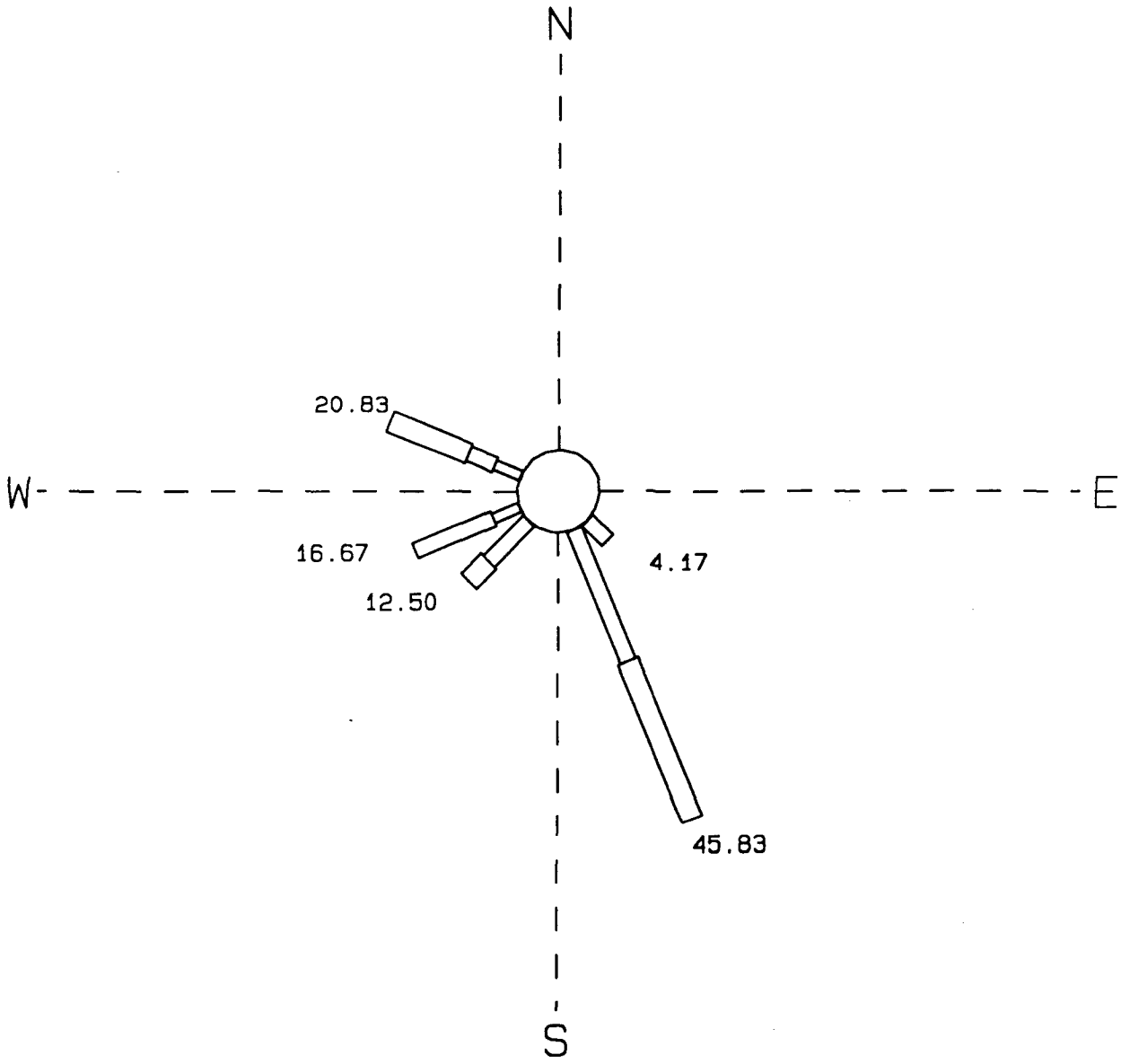

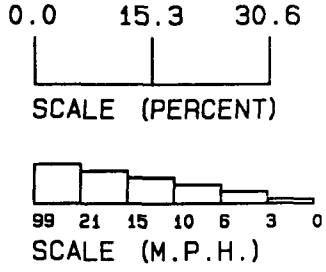

TOTAL HOURS:	24
PERCENT CALM:	0.00
PERCENT MISSING:	0.00

NEW BEDFORD HARBOR
24-HOUR WIND ROSE
START DATE: 11 JANUARY 1989
START HOUR: 0900

TOTAL HOURS - 24
PERCENT CALM - .00
PERCENT MISSING - .00

WIND DIRECTION	WIND SPEED CATAGORY (MPH) < 3	3 - 6	6 -10	10-15	15 - 21	> 21	TOTAL
N	.000	.000	.000	.000	.000	.000	.000
NNE	.000	.000	.000	.000	.000	.000	.000
NE	.000	.000	.000	.000	.000	.000	.000
ENE	.000	.000	.000	.000	.000	.000	.000
E	.000	.000	.000	.000	.000	.000	.000
ESE	.000	.000	.000	.000	.000	.000	.000
SE	.000	.000	4.167	.000	.000	.000	4.167
SSE	.000	.000	20.833	25.000	.000	.000	45.833
S	.000	.000	.000	.000	.000	.000	.000
SSW	.000	.000	.000	.000	.000	.000	.000
SW	.000	.000	8.333	4.167	.000	.000	12.500
WSW	.000	4.167	12.500	.000	.000	.000	16.667
W	.000	.000	.000	.000	.000	.000	.000
WNW	.000	4.167	4.167	12.500	.000	.000	20.833
NW	.000	.000	.000	.000	.000	.000	.000
NNW	.000	.000	.000	.000	.000	.000	.000
ALL	.000	8.333	50.000	41.667	.000	.000	100.000

NEW BEDFORD HARBOR
24-HOUR WIND ROSE
START DATE: 12 JANUARY 1989
START HOUR: 0900

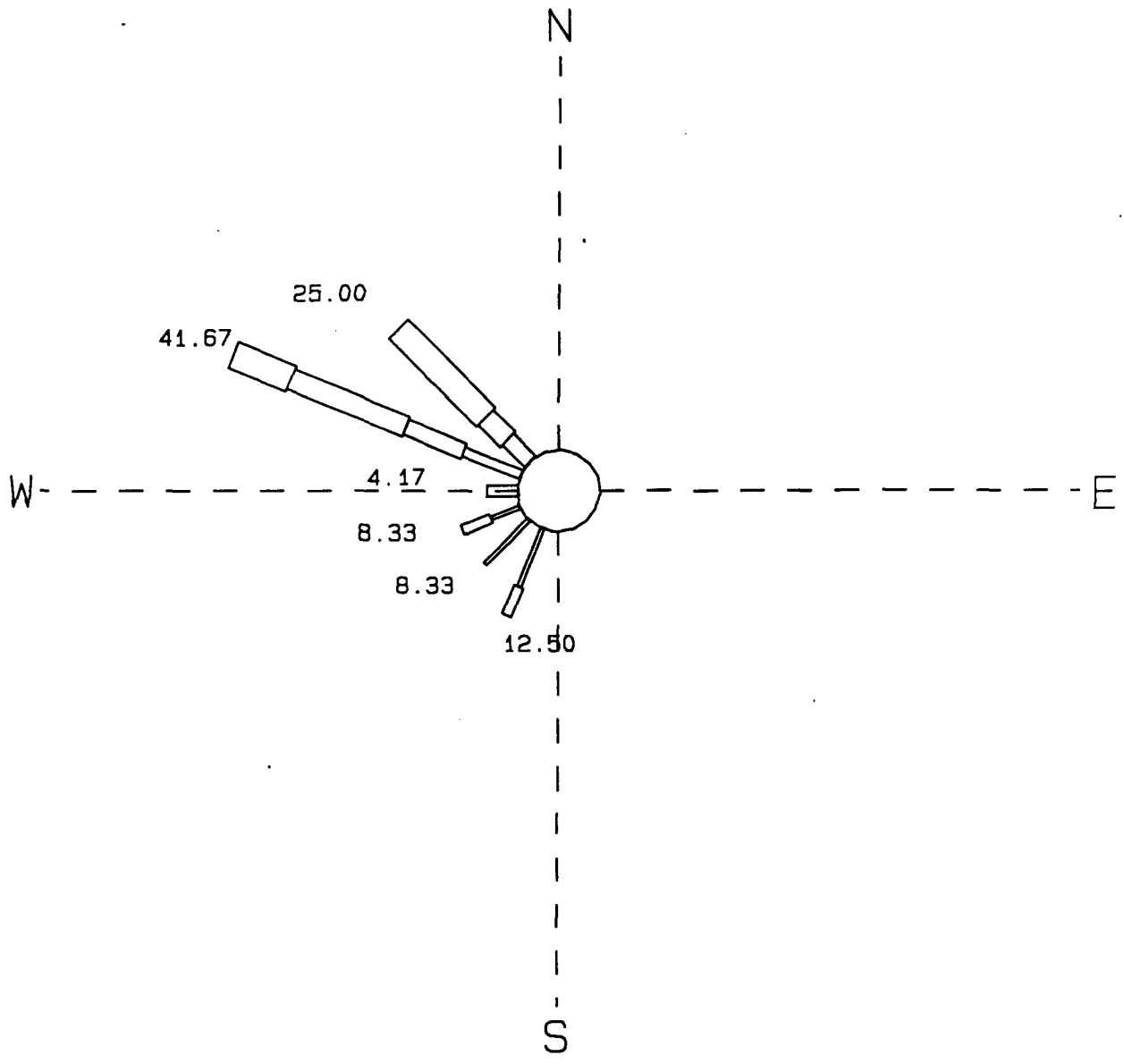

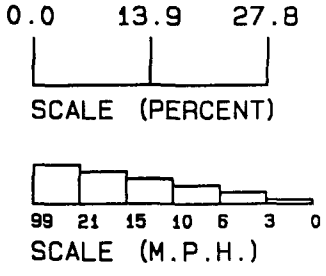

TOTAL HOURS:	24
PERCENT CALM:	0.00
PERCENT MISSING:	0.00

NEW BEDFORD HARBOR
24-HOUR WIND ROSE
START DATE: 12 JANUARY 1989
START HOUR: 0900

TOTAL HOURS - 24
PERCENT CALM - .00
PERCENT MISSING - .00

WIND DIRECTION	WIND SPEED CATAGORY (MPH) < 3	3 - 6	6 -10	10-15	15 - 21	> 21	TOTAL
N	.000	.000	.000	.000	.000	.000	.000
NNE	.000	.000	.000	.000	.000	.000	.000
NE	.000	.000	.000	.000	.000	.000	.000
ENE	.000	.000	.000	.000	.000	.000	.000
E	.000	.000	.000	.000	.000	.000	.000
ESE	.000	.000	.000	.000	.000	.000	.000
SE	.000	.000	.000	.000	.000	.000	.000
SSE	.000	.000	.000	.000	.000	.000	.000
S	.000	.000	.000	.000	.000	.000	.000
SSW	8.333	4.167	.000	.000	.000	.000	12.500
SW	8.333	.000	.000	.000	.000	.000	8.333
WSW	4.167	4.167	.000	.000	.000	.000	8.333
W	.000	4.167	.000	.000	.000	.000	4.167
WNW	.000	8.333	8.333	16.667	8.333	.000	41.667
NW	.000	.000	4.167	4.167	16.667	.000	25.000
NNW	.000	.000	.000	.000	.000	.000	.000
ALL	20.833	20.833	12.500	20.833	25.000	.000	100.000

NEW BEDFORD HARBOR
24-HOUR WIND ROSE
START DATE: 18 JANUARY 1989
START HOUR: 0900

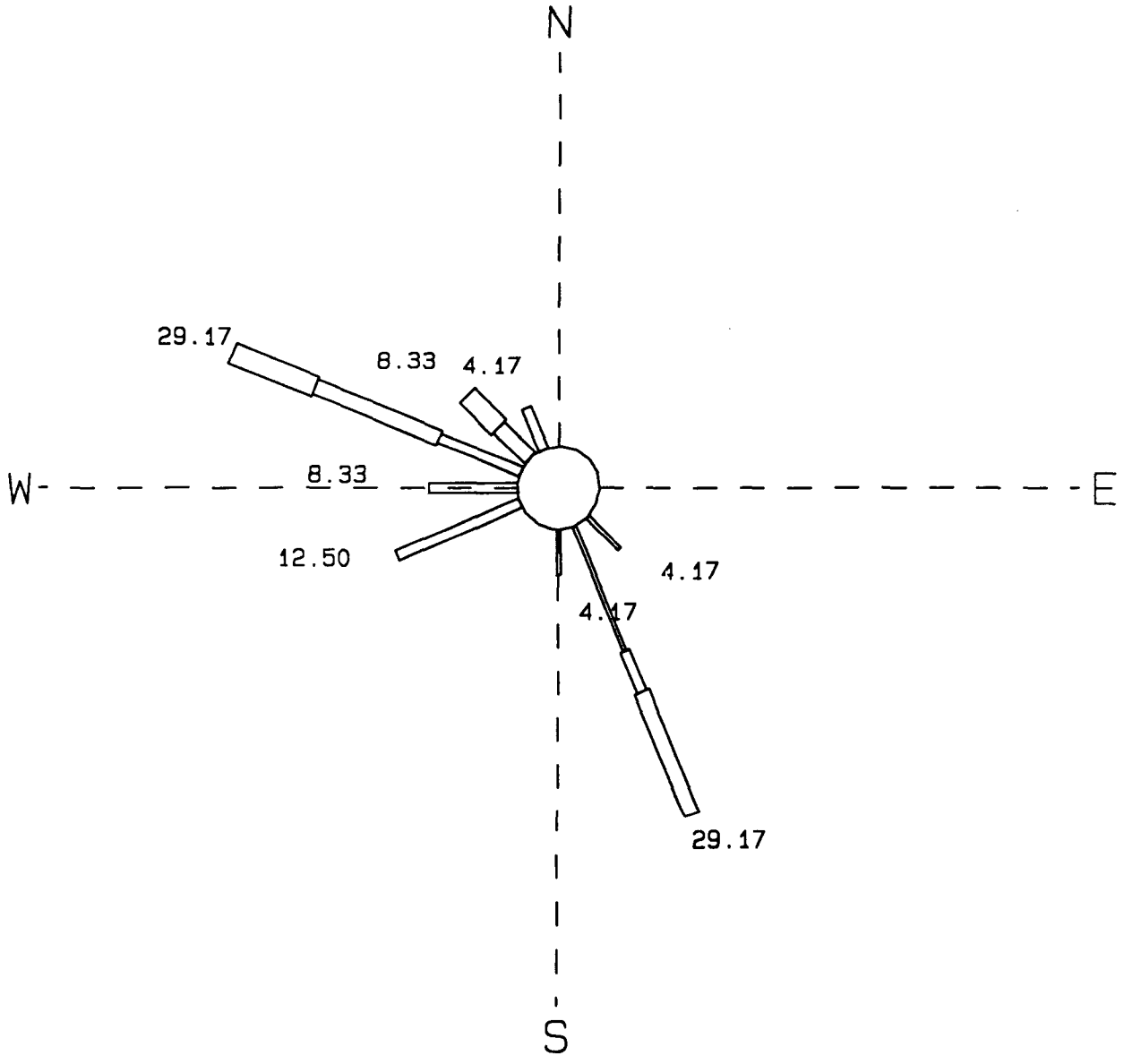

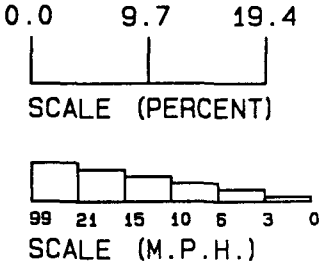

TOTAL HOURS:	24
PERCENT CALM:	0.00
PERCENT MISSING:	0.00

NEW BEDFORD HARBOR
24-HOUR WIND ROSE
START DATE: 18 JANUARY 1989
START HOUR: 0900

TOTAL HOURS - 24
PERCENT CALM - .00
PERCENT MISSING - .00

WIND DIRECTION	WIND SPEED CATAGORY (MPH) < 3	3 - 6	6 -10	10-15	15 - 21	> 21	TOTAL
N	.000	.000	.000	.000	.000	.000	.000
NNE	.000	.000	.000	.000	.000	.000	.000
NE	.000	.000	.000	.000	.000	.000	.000
ENE	.000	.000	.000	.000	.000	.000	.000
E	.000	.000	.000	.000	.000	.000	.000
ESE	.000	.000	.000	.000	.000	.000	.000
SE	4.167	.000	.000	.000	.000	.000	4.167
SSE	12.500	4.167	12.500	.000	.000	.000	29.167
S	4.167	.000	.000	.000	.000	.000	4.167
SSW	.000	.000	.000	.000	.000	.000	.000
SW	.000	.000	.000	.000	.000	.000	.000
WSW	.000	12.500	.000	.000	.000	.000	12.500
W	.000	8.333	.000	.000	.000	.000	8.333
WNW	.000	8.333	12.500	8.333	.000	.000	29.167
NW	.000	.000	4.167	4.167	.000	.000	8.333
NNW	.000	4.167	.000	.000	.000	.000	4.167
ALL	20.833	37.500	29.167	12.500	.000	.000	100.000

NEW BEDFORD HARBOR
24-HOUR WIND ROSE
START DATE: 19 JANUARY 1989
START HOUR: 0900

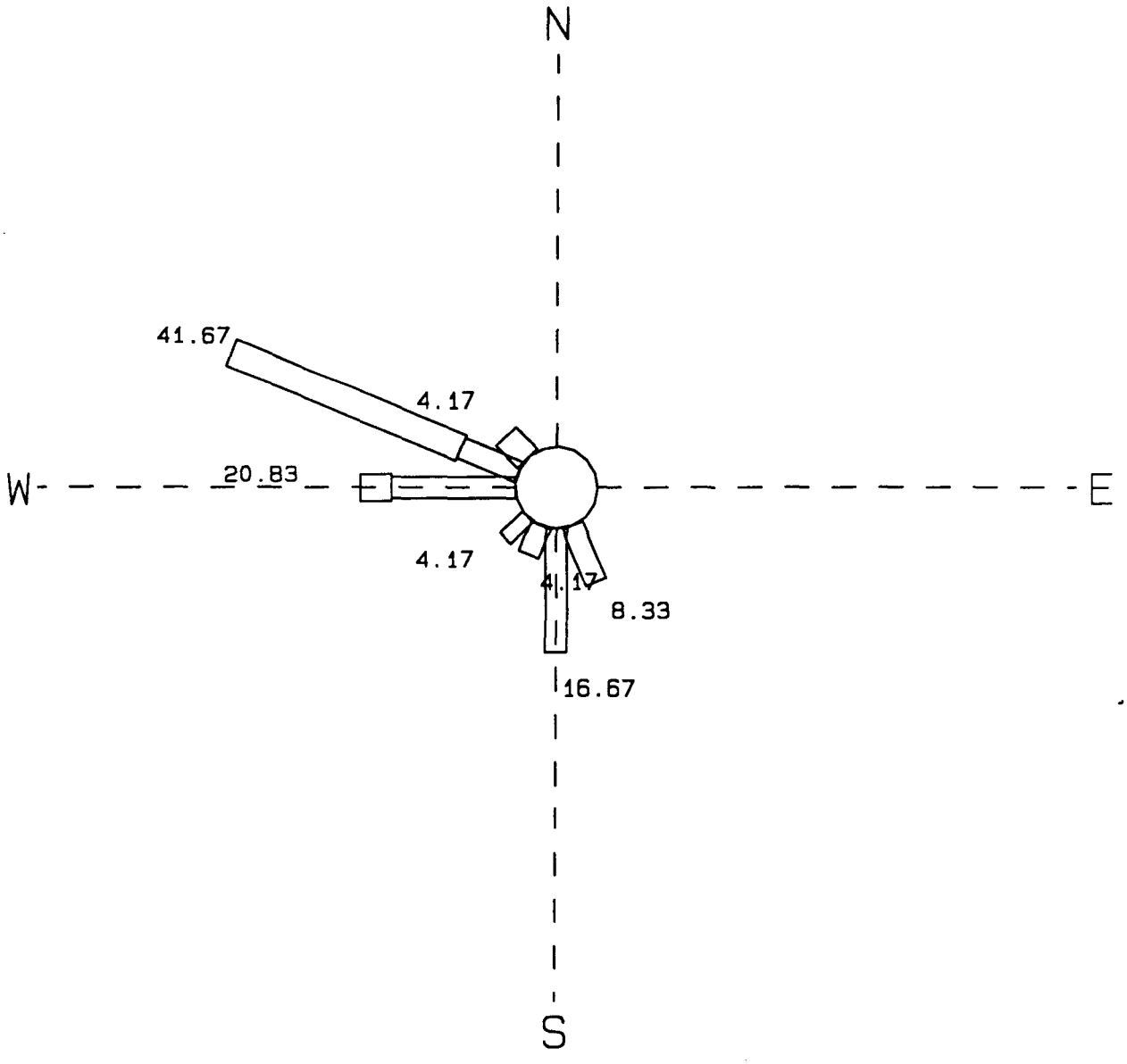

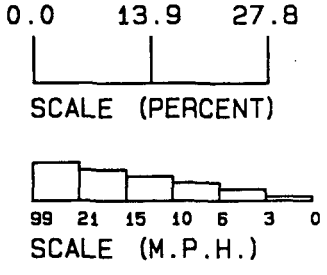

TOTAL HOURS:	24
PERCENT CALM:	0.00
PERCENT MISSING:	0.00

NEW BEDFORD HARBOR
24-HOUR WIND ROSE
START DATE: 19 JANUARY 1989
START HOUR: 0900

TOTAL HOURS - 24
PERCENT CALM - .00
PERCENT MISSING - .00

WIND DIRECTION	WIND SPEED CATAGORY (MPH) < 3	3 - 6	6 -10	10-15	15 - 21	> 21	TOTAL
N	.000	.000	.000	.000	.000	.000	.000
NNE	.000	.000	.000	.000	.000	.000	.000
NE	.000	.000	.000	.000	.000	.000	.000
ENE	.000	.000	.000	.000	.000	.000	.000
E	.000	.000	.000	.000	.000	.000	.000
ESE	.000	.000	.000	.000	.000	.000	.000
SE	.000	.000	.000	.000	.000	.000	.000
SSE	.000	.000	.000	8.333	.000	.000	8.333
S	.000	.000	.000	16.667	.000	.000	16.667
SSW	.000	.000	.000	4.167	.000	.000	4.167
SW	.000	.000	4.167	.000	.000	.000	4.167
WSW	.000	.000	.000	.000	.000	.000	.000
W	.000	.000	.000	16.667	4.167	.000	20.833
WNW	.000	.000	.000	8.333	33.333	.000	41.667
NW	.000	.000	.000	.000	4.167	.000	4.167
NNW	.000	.000	.000	.000	.000	.000	.000
ALL	.000	.000	4.167	54.167	41.667	.000	100.000

NEW BEDFORD HARBOR
24-HOUR WIND ROSE
START DATE: 20 JANUARY 1989
START HOUR: 0900

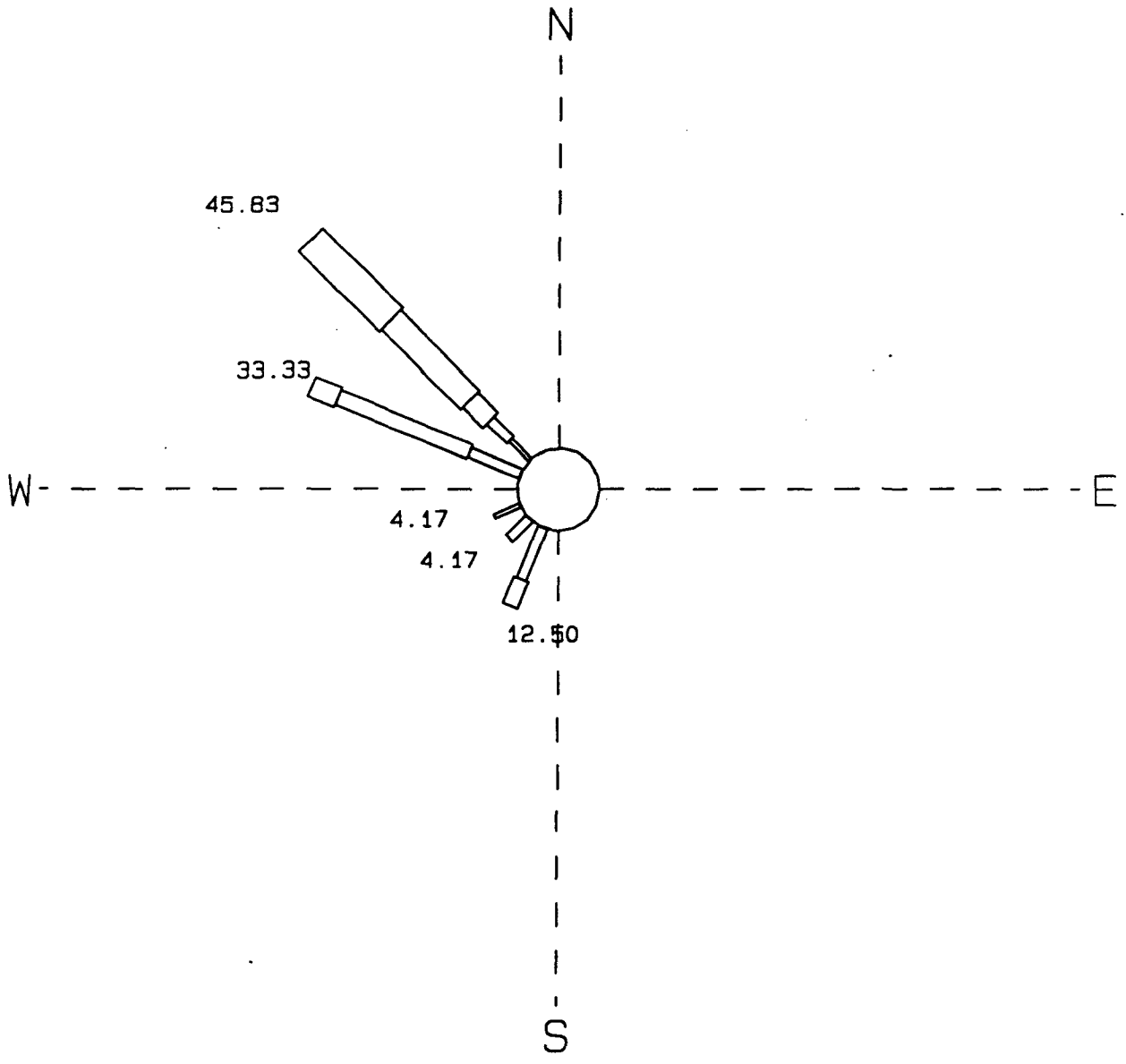

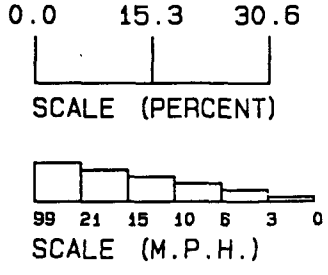

TOTAL HOURS:	24
PERCENT CALM:	0.00
PERCENT MISSING:	0.00

NEW BEDFORD HARBOR
24-HOUR WIND ROSE
START DATE: 20 JANUARY 1989
START HOUR: 0900

TOTAL HOURS - 24
PERCENT CALM - .00
PERCENT MISSING - .00

WIND DIRECTION	WIND SPEED CATAGORY (MPH) < 3	3 - 6	6 -10	10-15	15 - 21	> 21	TOTAL
N	.000	.000	.000	.000	.000	.000	.000
NNE	.000	.000	.000	.000	.000	.000	.000
NE	.000	.000	.000	.000	.000	.000	.000
ENE	.000	.000	.000	.000	.000	.000	.000
E	.000	.000	.000	.000	.000	.000	.000
ESE	.000	.000	.000	.000	.000	.000	.000
SE	.000	.000	.000	.000	.000	.000	.000
SSE	.000	.000	.000	.000	.000	.000	.000
S	.000	.000	.000	.000	.000	.000	.000
SSW	.000	8.333	4.167	.000	.000	.000	12.500
SW	.000	4.167	.000	.000	.000	.000	4.167
WSW	4.167	.000	.000	.000	.000	.000	4.167
W	.000	.000	.000	.000	.000	.000	.000
WNW	.000	8.333	20.833	4.167	.000	.000	33.333
NW	4.167	4.167	.000	4.167	16.667	16.667	45.833
NNW	.000	.000	.000	.000	.000	.000	.000
ALL	8.333	25.000	25.000	8.333	16.667	16.667	100.000

NEW BEDFORD HARBOR
24-HOUR WIND ROSE
START DATE: 3 APRIL 1989
START HOUR: 0900

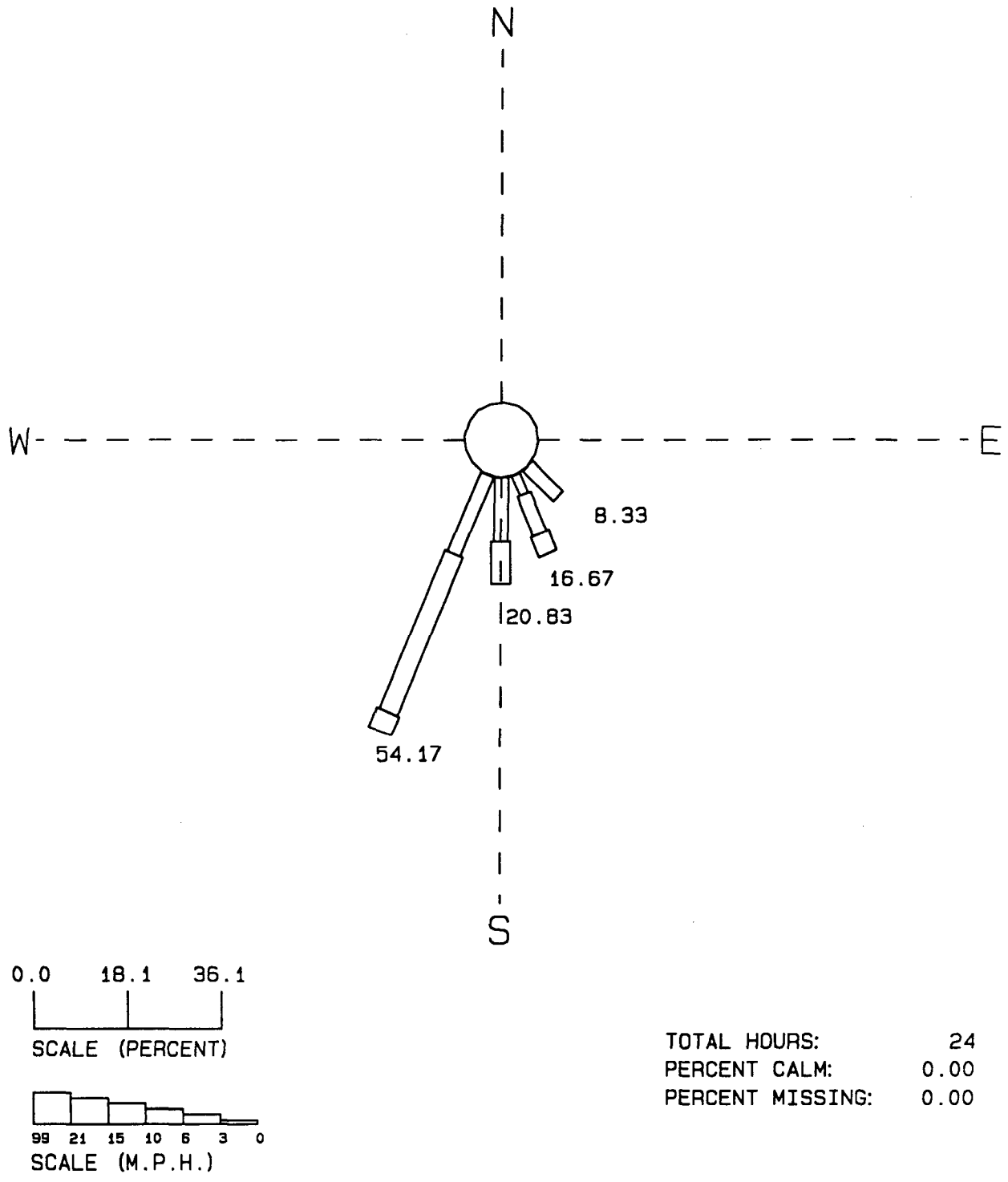

TOTAL HOURS:	24
PERCENT CALM:	0.00
PERCENT MISSING:	0.00

NEW BEDFORD HARBOR
24-HOUR WIND ROSE
START DATE: 3 APRIL 1989
START HOUR: 0900

TOTAL HOURS - 24
PERCENT CALM - .00
PERCENT MISSING - .00

WIND DIRECTION	WIND SPEED CATAGORY (MPH) < 3	3 - 6	6 -10	10-15	15 - 21	> 21	TOTAL
N	.000	.000	.000	.000	.000	.000	.000
NNE	.000	.000	.000	.000	.000	.000	.000
NE	.000	.000	.000	.000	.000	.000	.000
ENE	.000	.000	.000	.000	.000	.000	.000
E	.000	.000	.000	.000	.000	.000	.000
ESE	.000	.000	.000	.000	.000	.000	.000
SE	.000	.000	8.333	.000	.000	.000	8.333
SSE	.000	4.167	8.333	4.167	.000	.000	16.667
S	.000	.000	12.500	8.333	.000	.000	20.833
SSW	.000	.000	16.667	33.333	4.167	.000	54.167
SW	.000	.000	.000	.000	.000	.000	.000
WSW	.000	.000	.000	.000	.000	.000	.000
W	.000	.000	.000	.000	.000	.000	.000
WNW	.000	.000	.000	.000	.000	.000	.000
NW	.000	.000	.000	.000	.000	.000	.000
NNW	.000	.000	.000	.000	.000	.000	.000
ALL	.000	4.167	45.833	45.833	4.167	.000	100.000

NEW BEDFORD HARBOR
24-HOUR WIND ROSE
START DATE: 4 APRIL 1989
START HOUR: 0900

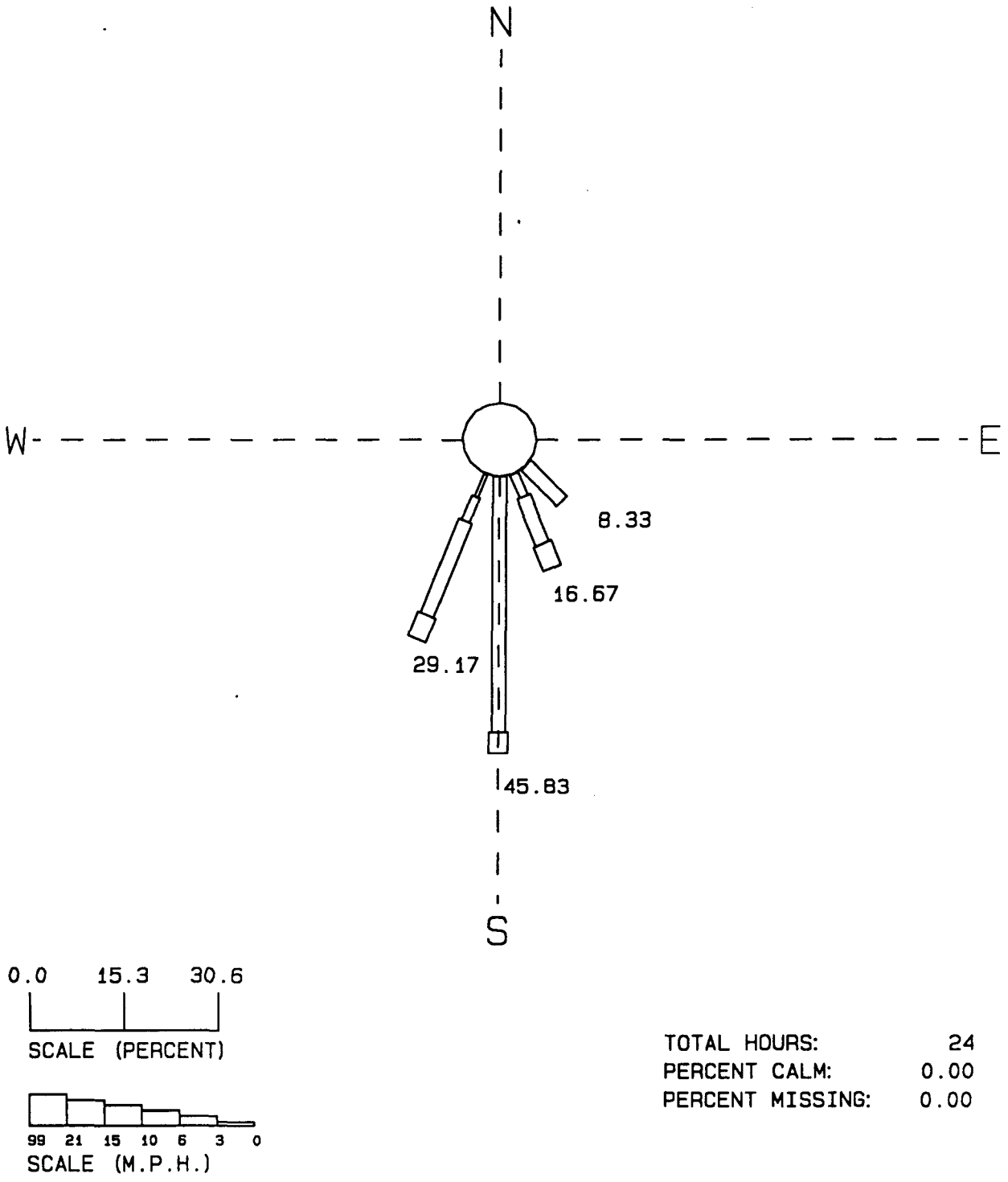

TOTAL HOURS:	24
PERCENT CALM:	0.00
PERCENT MISSING:	0.00

NEW BEDFORD HARBOR
24-HOUR WIND ROSE
START DATE: 4 APRIL 1989
START HOUR: 0900

TOTAL HOURS - 24
PERCENT CALM - .00
PERCENT MISSING - .00

WIND DIRECTION	WIND SPEED CATAGORY (MPH) < 3	3 - 6	6 -10	10-15	15 - 21	> 21	TOTAL
N	.000	.000	.000	.000	.000	.000	.000
NNE	.000	.000	.000	.000	.000	.000	.000
NE	.000	.000	.000	.000	.000	.000	.000
ENE	.000	.000	.000	.000	.000	.000	.000
E	.000	.000	.000	.000	.000	.000	.000
ESE	.000	.000	.000	.000	.000	.000	.000
SE	.000	.000	8.333	.000	.000	.000	8.333
SSE	.000	4.167	8.333	4.167	.000	.000	16.667
S	.000	.000	41.667	4.167	.000	.000	45.833
SSW	4.167	4.167	16.667	4.167	.000	.000	29.167
SW	.000	.000	.000	.000	.000	.000	.000
WSW	.000	.000	.000	.000	.000	.000	.000
W	.000	.000	.000	.000	.000	.000	.000
WNW	.000	.000	.000	.000	.000	.000	.000
NW	.000	.000	.000	.000	.000	.000	.000
NNW	.000	.000	.000	.000	.000	.000	.000
ALL	4.167	8.333	75.000	12.500	.000	.000	100.000

NEW BEDFORD HARBOR
24-HOUR WIND ROSE
START DATE: 5 APRIL 1989
START HOUR: 0900

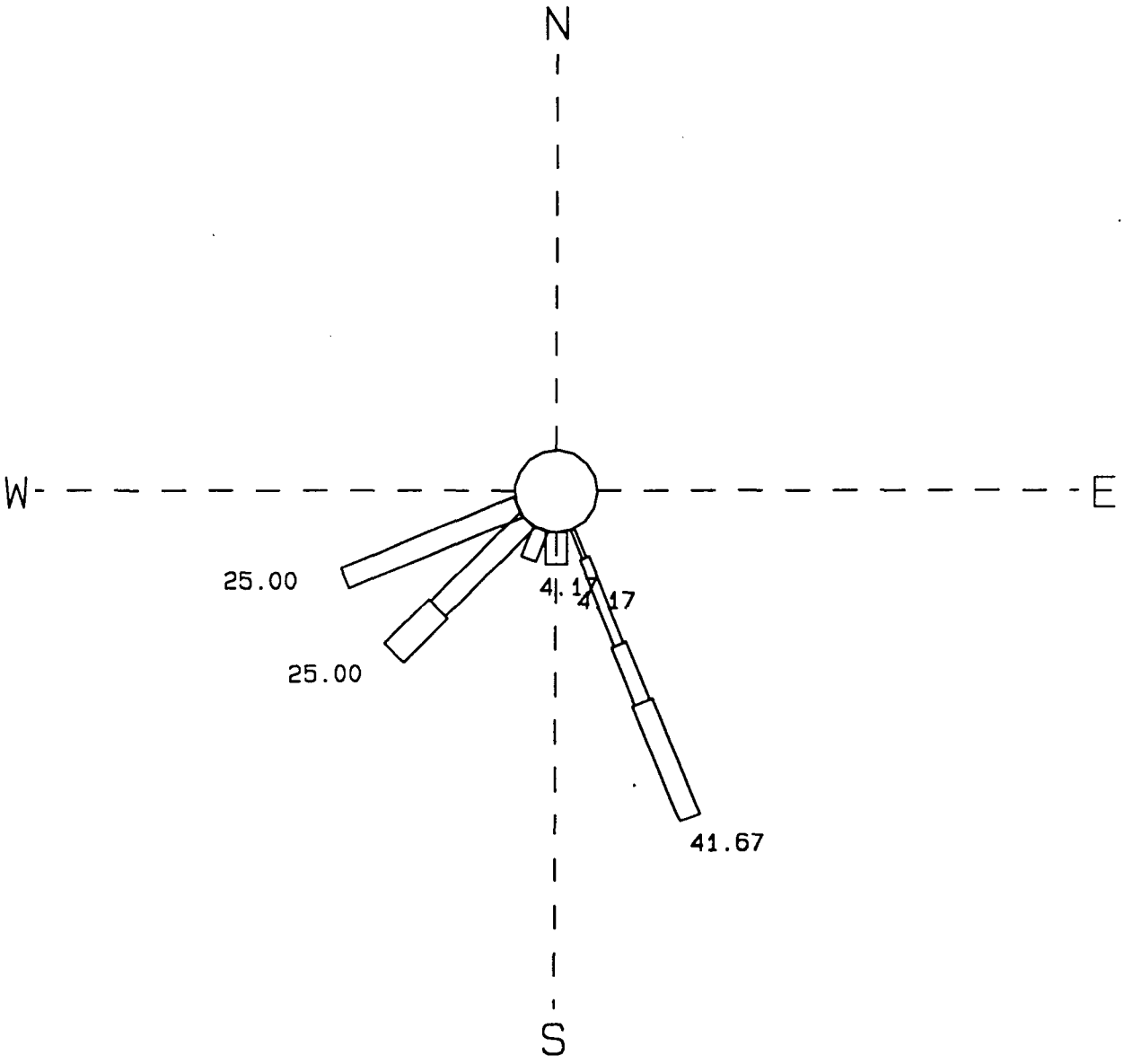

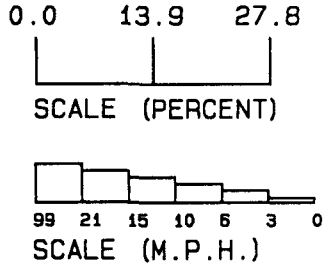

TOTAL HOURS:	24
PERCENT CALM:	0.00
PERCENT MISSING:	0.00

NEW BEDFORD HARBOR
24-HOUR WIND ROSE
START DATE: 5 APRIL 1989
START HOUR: 0900

TOTAL HOURS - 24
PERCENT CALM - .00
PERCENT MISSING - .00

WIND DIRECTION	WIND SPEED CATAGORY (MPH) < 3	3 - 6	6 -10	10-15	15 - 21	> 21	TOTAL
N	.000	.000	.000	.000	.000	.000	.000
NNE	.000	.000	.000	.000	.000	.000	.000
NE	.000	.000	.000	.000	.000	.000	.000
ENE	.000	.000	.000	.000	.000	.000	.000
E	.000	.000	.000	.000	.000	.000	.000
ESE	.000	.000	.000	.000	.000	.000	.000
SE	.000	.000	.000	.000	.000	.000	.000
SSE	4.167	12.500	8.333	16.667	.000	.000	41.667
S	.000	.000	.000	4.167	.000	.000	4.167
SSW	.000	.000	4.167	.000	.000	.000	4.167
SW	.000	.000	.000	16.667	8.333	.000	25.000
WSW	.000	.000	.000	25.000	.000	.000	25.000
W	.000	.000	.000	.000	.000	.000	.000
WNW	.000	.000	.000	.000	.000	.000	.000
NW	.000	.000	.000	.000	.000	.000	.000
NNW	.000	.000	.000	.000	.000	.000	.000
ALL	4.167	12.500	12.500	62.500	8.333	.000	100.000

NEW BEDFORD HARBOR
24-HOUR WIND ROSE
START DATE: 6 APRIL 1989
START HOUR: 0900

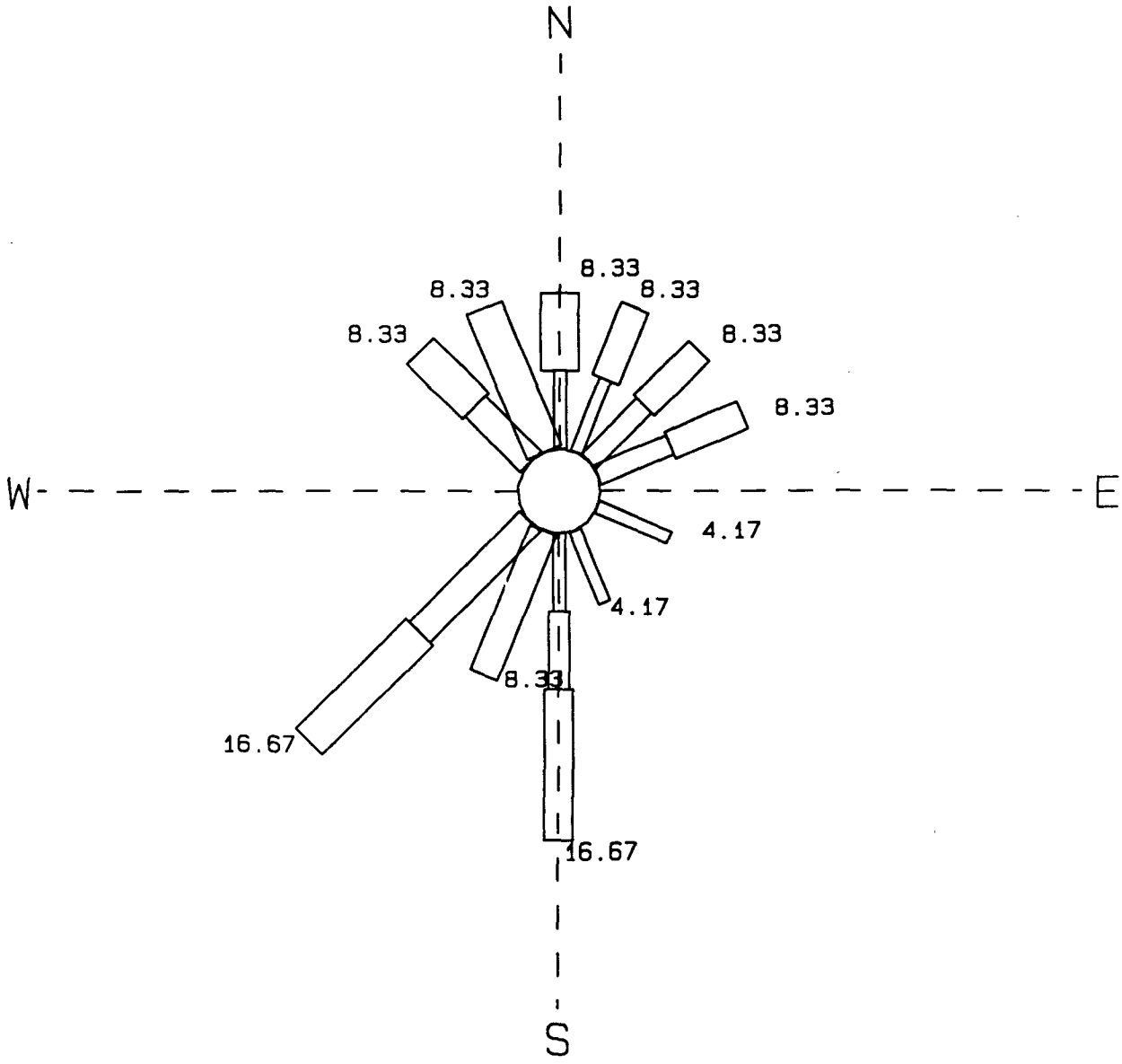

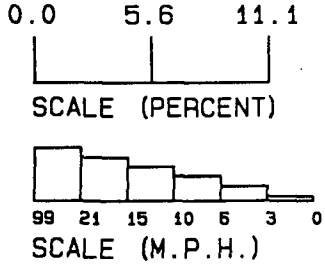

TOTAL HOURS:	24
PERCENT CALM:	0.00
PERCENT MISSING:	0.00

NEW BEDFORD HARBOR
24-HOUR WIND ROSE
START DATE: 6 APRIL 1989
START HOUR: 0900

TOTAL HOURS - 24
PERCENT CALM - .00
PERCENT MISSING - .00

WIND DIRECTION	WIND SPEED CATAGORY (MPH) < 3	3 - 6	6 -10	10-15	15 - 21	> 21	TOTAL
N	.000	4.167	.000	.000	4.167	.000	8.333
NNE	.000	4.167	.000	4.167	.000	.000	8.333
NE	.000	.000	4.167	4.167	.000	.000	8.333
ENE	.000	.000	4.167	4.167	.000	.000	8.333
E	.000	.000	.000	.000	.000	.000	.000
ESE	.000	4.167	.000	.000	.000	.000	4.167
SE	.000	.000	.000	.000	.000	.000	.000
SSE	.000	4.167	.000	.000	.000	.000	4.167
S	.000	4.167	4.167	8.333	.000	.000	16.667
SSW	.000	.000	.000	8.333	.000	.000	8.333
SW	.000	.000	.000	8.333	8.333	.000	16.667
WSW	.000	.000	.000	.000	.000	.000	.000
W	.000	.000	.000	.000	.000	.000	.000
WNW	.000	.000	.000	.000	.000	.000	.000
NW	.000	.000	.000	4.167	4.167	.000	8.333
NNW	.000	.000	.000	.000	8.333	.000	8.333
ALL	.000	20.833	12.500	41.667	25.000	.000	100.000

NEW BEDFORD HARBOR
24-HOUR WIND ROSE
START DATE: 10 APRIL 1989
START HOUR: 0900

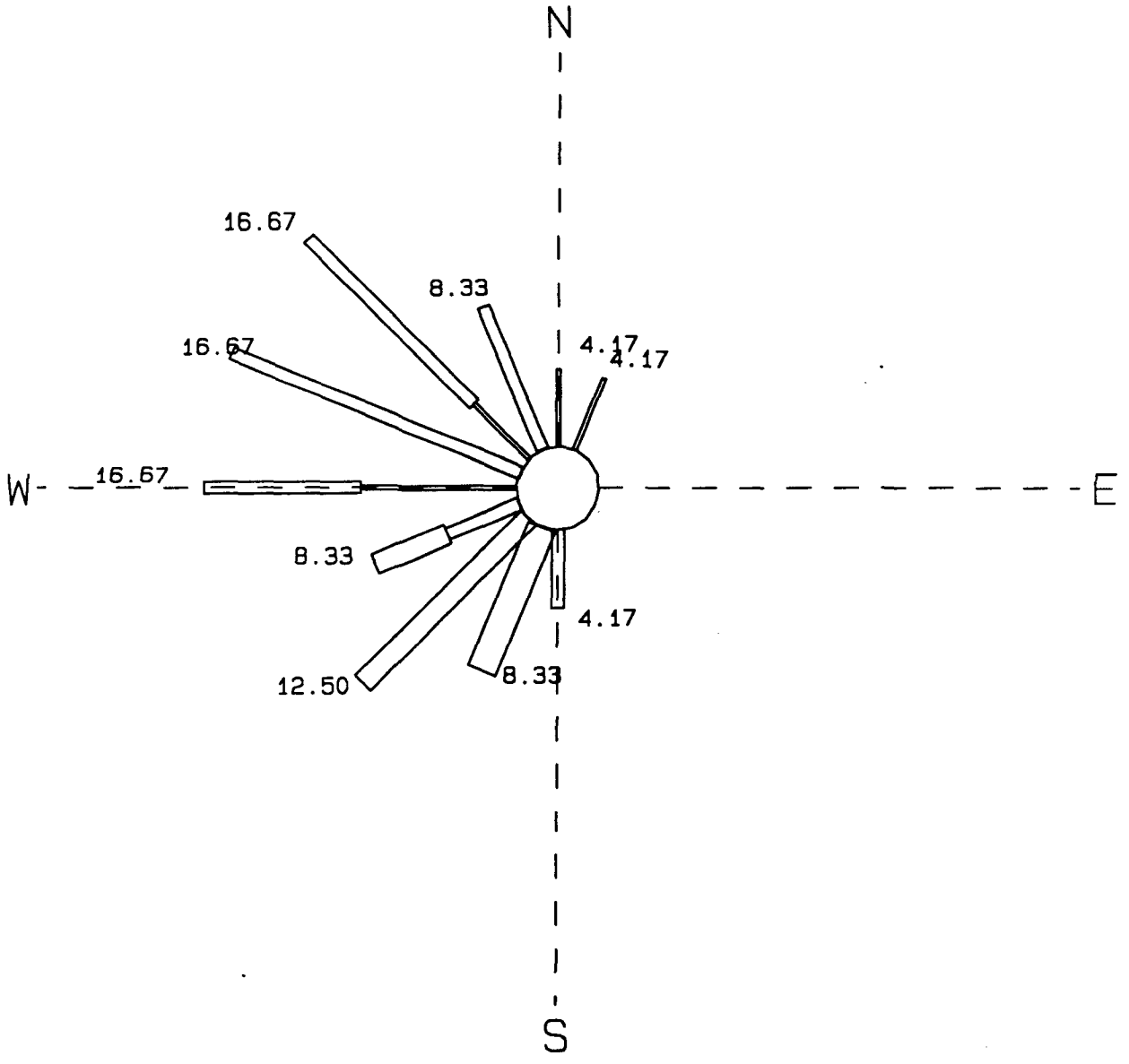

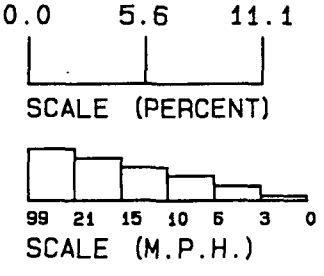

TOTAL HOURS:	24
PERCENT CALM:	0.00
PERCENT MISSING:	0.00

NEW BEDFORD HARBOR
24-HOUR WIND ROSE
START DATE: 10 APRIL 1989
START HOUR: 0900

TOTAL HOURS - 24
PERCENT CALM - .00
PERCENT MISSING - .00

WIND DIRECTION	WIND SPEED CATAGORY (MPH) < 3	3 - 6	6 -10	10-15	15 - 21	> 21	TOTAL
N	4.167	.000	.000	.000	.000	.000	4.167
NNE	4.167	.000	.000	.000	.000	.000	4.167
NE	.000	.000	.000	.000	.000	.000	.000
ENE	.000	.000	.000	.000	.000	.000	.000
E	.000	.000	.000	.000	.000	.000	.000
ESE	.000	.000	.000	.000	.000	.000	.000
SE	.000	.000	.000	.000	.000	.000	.000
SSE	.000	.000	.000	.000	.000	.000	.000
S	.000	4.167	.000	.000	.000	.000	4.167
SSW	.000	.000	.000	8.333	.000	.000	8.333
SW	.000	.000	12.500	.000	.000	.000	12.500
WSW	.000	4.167	4.167	.000	.000	.000	8.333
W	8.333	8.333	.000	.000	.000	.000	16.667
WNW	.000	16.667	.000	.000	.000	.000	16.667
NW	4.167	12.500	.000	.000	.000	.000	16.667
NNW	.000	8.333	.000	.000	.000	.000	8.333
ALL	20.833	54.167	16.667	8.333	.000	.000	100.000

NEW BEDFORD HARBOR
24-HOUR WIND ROSE
START DATE: 11 APRIL 1989
START HOUR: 0900

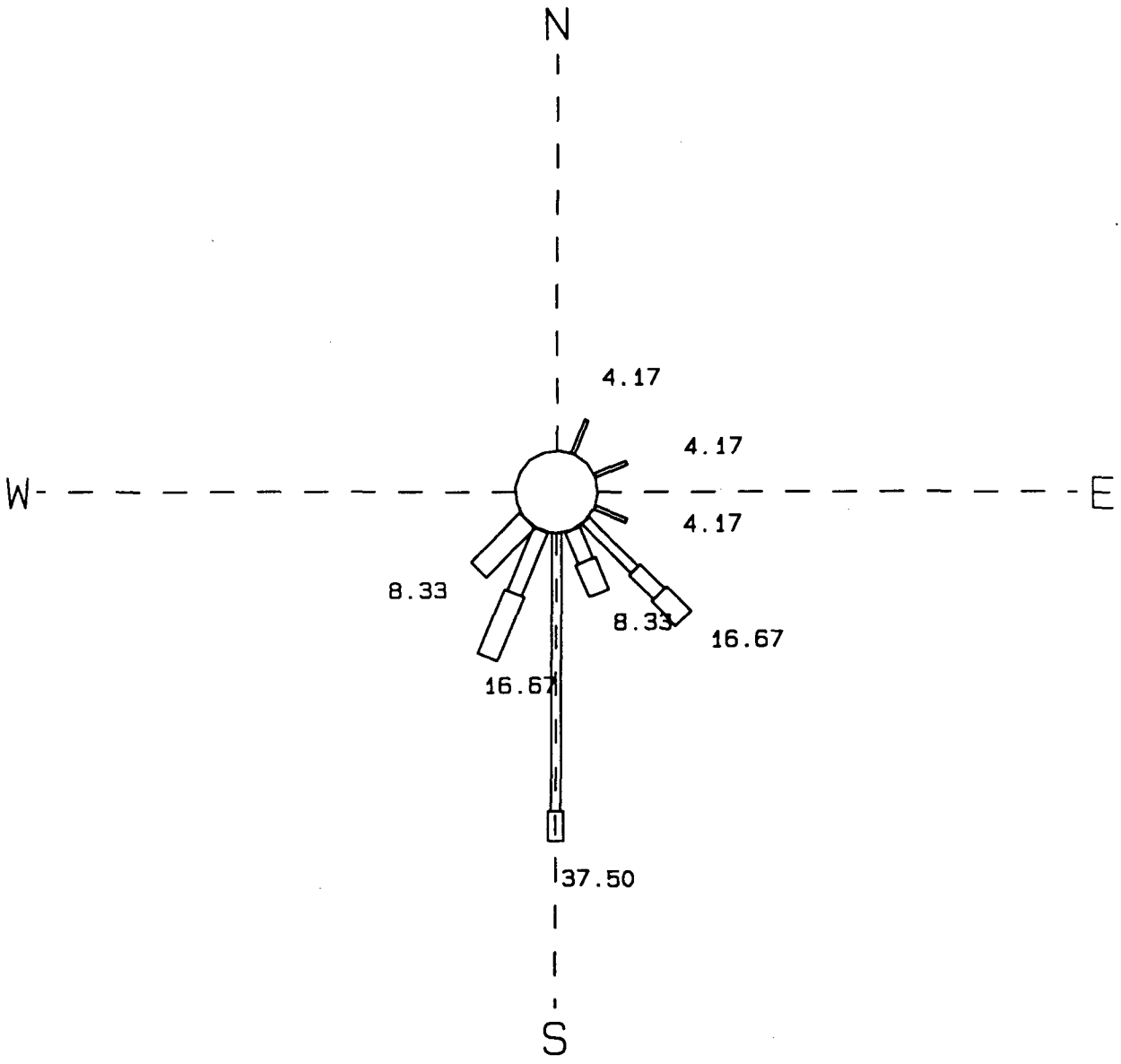

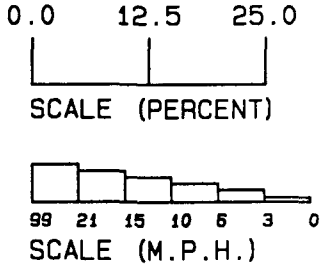

TOTAL HOURS:	24
PERCENT CALM:	0.00
PERCENT MISSING:	0.00

NEW BEDFORD HARBOR
24-HOUR WIND ROSE
START DATE: 11 APRIL 1989
START HOUR: 0900

TOTAL HOURS - 24
PERCENT CALM - .00
PERCENT MISSING - .00

WIND DIRECTION	WIND SPEED CATAGORY (MPH) < 3	3 - 6	6 -10	10-15	15 - 21	> 21	TOTAL
N	.000	.000	.000	.000	.000	.000	.000
NNE	4.167	.000	.000	.000	.000	.000	4.167
NE	.000	.000	.000	.000	.000	.000	.000
ENE	4.167	.000	.000	.000	.000	.000	4.167
E	.000	.000	.000	.000	.000	.000	.000
ESE	4.167	.000	.000	.000	.000	.000	4.167
SE	.000	8.333	4.167	4.167	.000	.000	16.667
SSE	.000	.000	4.167	4.167	.000	.000	8.333
S	.000	33.333	4.167	.000	.000	.000	37.500
SSW	.000	.000	8.333	8.333	.000	.000	16.667
SW	.000	.000	.000	8.333	.000	.000	8.333
WSW	.000	.000	.000	.000	.000	.000	.000
W	.000	.000	.000	.000	.000	.000	.000
WNW	.000	.000	.000	.000	.000	.000	.000
NW	.000	.000	.000	.000	.000	.000	.000
NNW	.000	.000	.000	.000	.000	.000	.000
ALL	12.500	41.667	20.833	25.000	.000	.000	100.000

NEW BEDFORD HARBOR
24-HOUR WIND ROSE
START DATE: 12 APRIL 1989
START HOUR: 0900

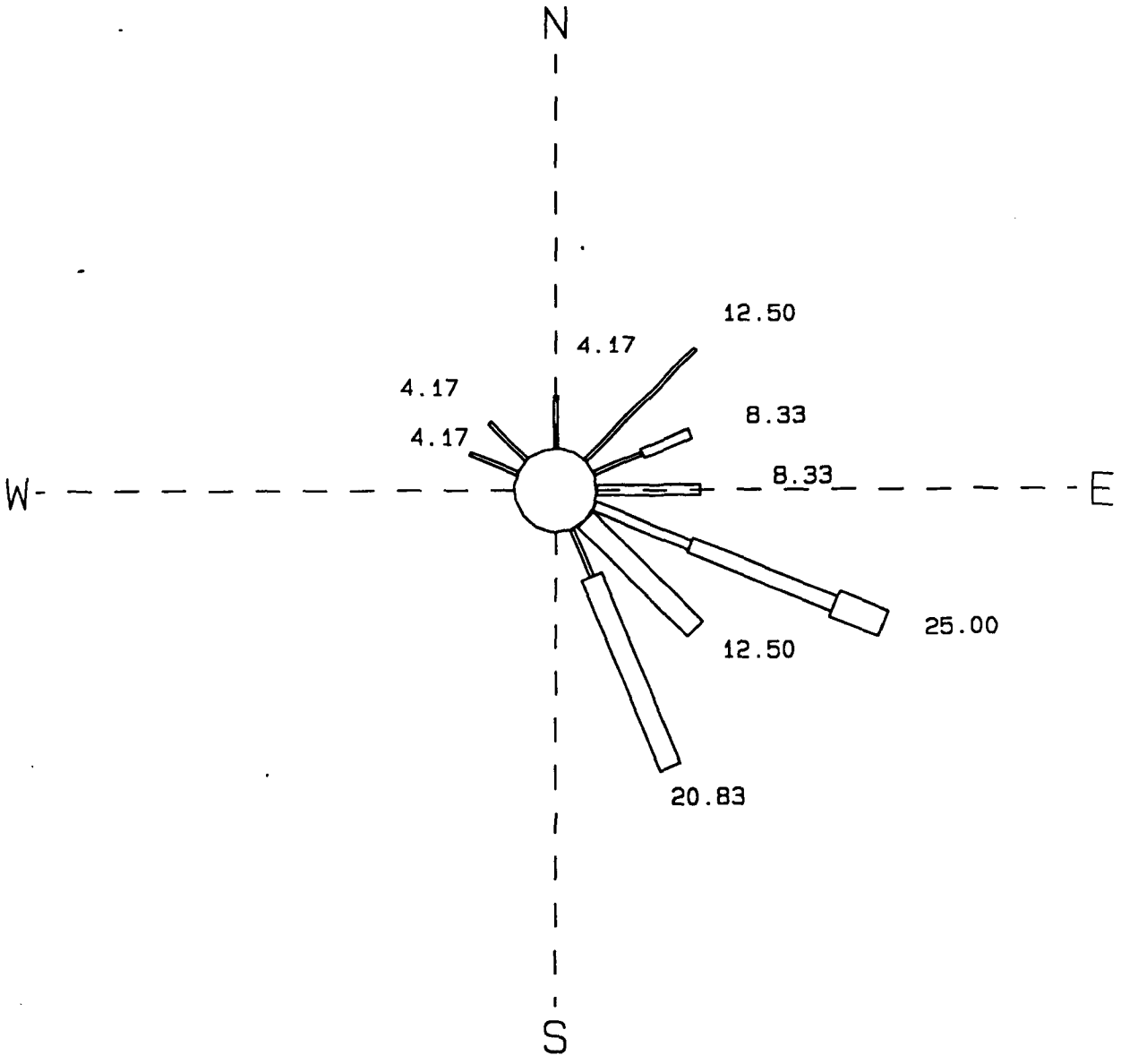

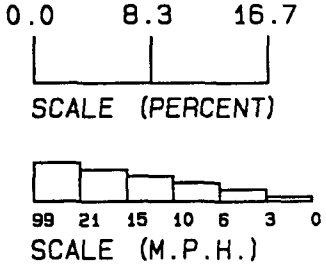

TOTAL HOURS:	24
PERCENT CALM:	0.00
PERCENT MISSING:	0.00

NEW BEDFORD HARBOR
24-HOUR WIND ROSE
START DATE: 12 APRIL 1989
START HOUR: 0900

TOTAL HOURS - 24
PERCENT CALM - .00
PERCENT MISSING - .00

WIND DIRECTION	WIND SPEED CATAGORY (MPH) < 3	3 - 6	6 -10	10-15	15 - 21	> 21	TOTAL
N	4.167	.000	.000	.000	.000	.000	4.167
NNE	.000	.000	.000	.000	.000	.000	.000
NE	12.500	.000	.000	.000	.000	.000	12.500
ENE	4.167	4.167	.000	.000	.000	.000	8.333
E	.000	8.333	.000	.000	.000	.000	8.333
ESE	.000	8.333	12.500	.000	4.167	.000	25.000
SE	.000	.000	.000	12.500	.000	.000	12.500
SSE	4.167	.000	.000	16.667	.000	.000	20.833
S	.000	.000	.000	.000	.000	.000	.000
SSW	.000	.000	.000	.000	.000	.000	.000
SW	.000	.000	.000	.000	.000	.000	.000
WSW	.000	.000	.000	.000	.000	.000	.000
W	.000	.000	.000	.000	.000	.000	.000
WNW	4.167	.000	.000	.000	.000	.000	4.167
NW	4.167	.000	.000	.000	.000	.000	4.167
NNW	.000	.000	.000	.000	.000	.000	.000
ALL	33.333	20.833	12.500	29.167	4.167	.000	100.000

NEW BEDFORD HARBOR
24-HOUR WIND ROSE
START DATE: 13 APRIL 1989
START HOUR: 0900

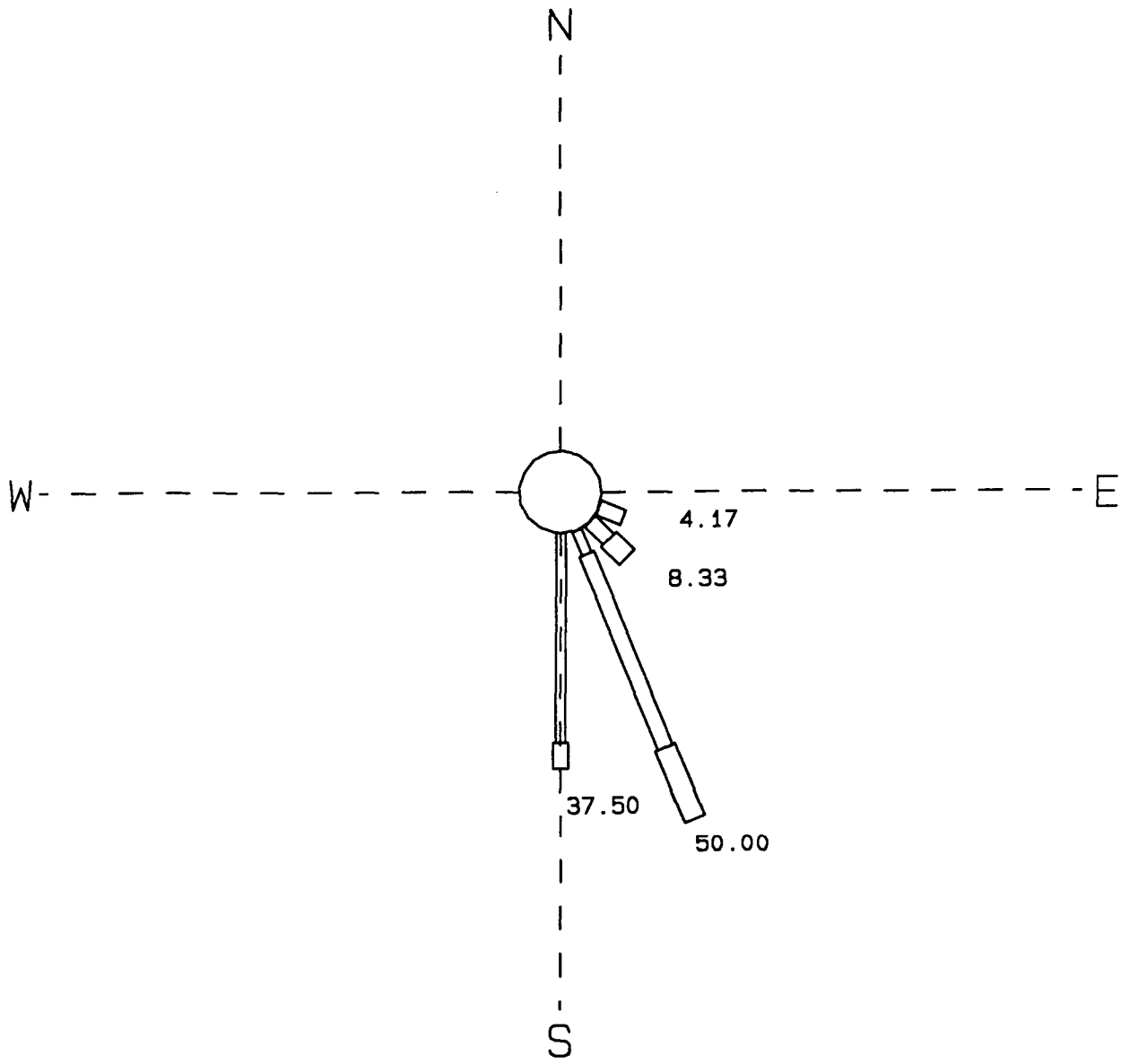

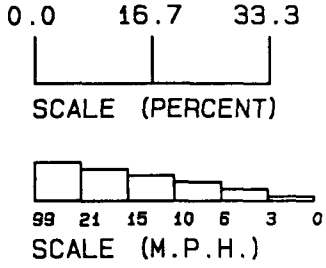

TOTAL HOURS:	24
PERCENT CALM:	0.00
PERCENT MISSING:	0.00

NEW BEDFORD HARBOR
24-HOUR WIND ROSE
START DATE: 13 APRIL 1989
START HOUR: 0900

TOTAL HOURS - 24
PERCENT CALM - .00
PERCENT MISSING - .00

WIND DIRECTION	WIND SPEED CATAGORY (MPH) < 3	3 - 6	6 -10	10-15	15 - 21	> 21	TOTAL
N	.000	.000	.000	.000	.000	.000	.000
NNE	.000	.000	.000	.000	.000	.000	.000
NE	.000	.000	.000	.000	.000	.000	.000
ENE	.000	.000	.000	.000	.000	.000	.000
E	.000	.000	.000	.000	.000	.000	.000
ESE	.000	.000	4.167	.000	.000	.000	4.167
SE	.000	.000	4.167	4.167	.000	.000	8.333
SSE	.000	4.167	33.333	12.500	.000	.000	50.000
S	.000	33.333	4.167	.000	.000	.000	37.500
SSW	.000	.000	.000	.000	.000	.000	.000
SW	.000	.000	.000	.000	.000	.000	.000
WSW	.000	.000	.000	.000	.000	.000	.000
W	.000	.000	.000	.000	.000	.000	.000
WNW	.000	.000	.000	.000	.000	.000	.000
NW	.000	.000	.000	.000	.000	.000	.000
NNW	.000	.000	.000	.000	.000	.000	.000
ALL	.000	37.500	45.833	16.667	.000	.000	100.000

NEW BEDFORD HARBOR
24-HOUR WIND ROSE
START DATE: 17 APRIL 1989
START HOUR: 0900

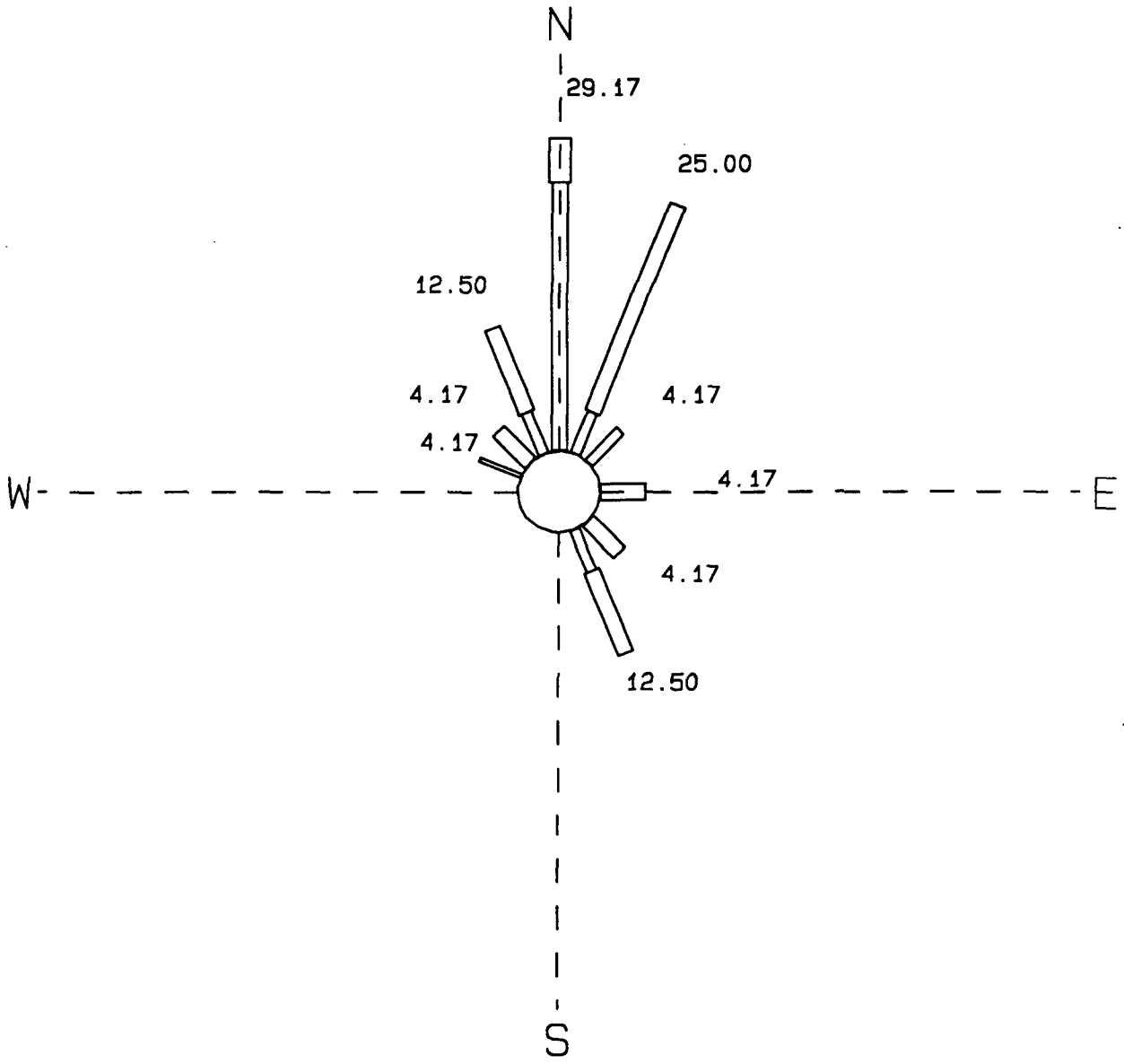

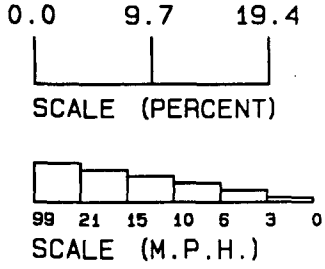

TOTAL HOURS:	24
PERCENT CALM:	0.00
PERCENT MISSING:	0.00

NEW BEDFORD HARBOR
24-HOUR WIND ROSE
START DATE: 17 APRIL 1989
START HOUR: 0900

TOTAL HOURS - 24
PERCENT CALM - .00
PERCENT MISSING - .00

WIND DIRECTION	WIND SPEED CATAGORY (MPH) < 3	3 - 6	6 -10	10-15	15 - 21	> 21	TOTAL
N	.000	.000	25.000	4.167	.000	.000	29.167
NNE	.000	4.167	20.833	.000	.000	.000	25.000
NE	.000	4.167	.000	.000	.000	.000	4.167
ENE	.000	.000	.000	.000	.000	.000	.000
E	.000	.000	4.167	.000	.000	.000	4.167
ESE	.000	.000	.000	.000	.000	.000	.000
SE	.000	.000	4.167	.000	.000	.000	4.167
SSE	.000	4.167	8.333	.000	.000	.000	12.500
S	.000	.000	.000	.000	.000	.000	.000
SSW	.000	.000	.000	.000	.000	.000	.000
SW	.000	.000	.000	.000	.000	.000	.000
WSW	.000	.000	.000	.000	.000	.000	.000
W	.000	.000	.000	.000	.000	.000	.000
WNW	4.167	.000	.000	.000	.000	.000	4.167
NW	.000	.000	4.167	.000	.000	.000	4.167
NNW	.000	4.167	8.333	.000	.000	.000	12.500
ALL	4.167	16.667	75.000	4.167	.000	.000	100.000

NEW BEDFORD HARBOR
24-HOUR WIND ROSE
START DATE: 18 APRIL 1989
START HOUR: 0900

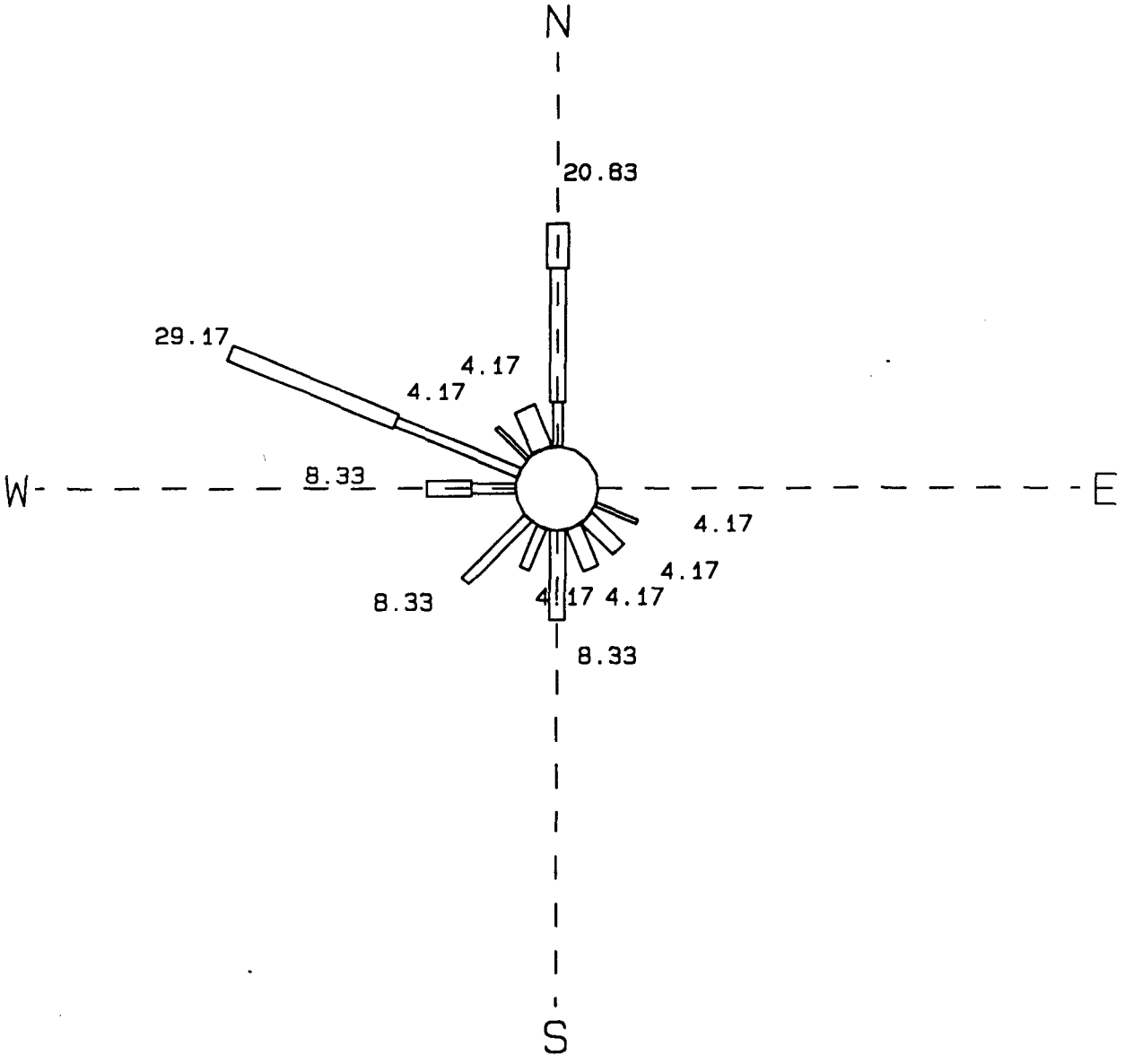

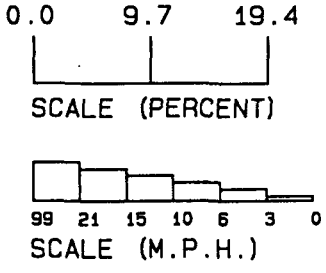

TOTAL HOURS:	24
PERCENT CALM:	0.00
PERCENT MISSING:	0.00

NEW BEDFORD HARBOR
24-HOUR WIND ROSE
START DATE: 18 APRIL 1989
START HOUR: 0900

TOTAL HOURS - 24
PERCENT CALM - .00
PERCENT MISSING - .00

WIND DIRECTION	WIND SPEED CATAGORY (MPH) < 3	3 - 6	6 -10	10-15	15 - 21	> 21	TOTAL
N	.000	4.167	12.500	4.167	.000	.000	20.833
NNE	.000	.000	.000	.000	.000	.000	.000
NE	.000	.000	.000	.000	.000	.000	.000
ENE	.000	.000	.000	.000	.000	.000	.000
E	.000	.000	.000	.000	.000	.000	.000
ESE	4.167	.000	.000	.000	.000	.000	4.167
SE	.000	.000	4.167	.000	.000	.000	4.167
SSE	.000	.000	4.167	.000	.000	.000	4.167
S	.000	.000	8.333	.000	.000	.000	8.333
SSW	.000	4.167	.000	.000	.000	.000	4.167
SW	.000	8.333	.000	.000	.000	.000	8.333
WSW	.000	.000	.000	.000	.000	.000	.000
W	.000	4.167	4.167	.000	.000	.000	8.333
WNW	.000	12.500	16.667	.000	.000	.000	29.167
NW	4.167	.000	.000	.000	.000	.000	4.167
NNW	.000	.000	.000	4.167	.000	.000	4.167
ALL	8.333	33.333	50.000	8.333	.000	.000	100.000

NEW BEDFORD HARBOR
24-HOUR WIND ROSE
START DATE: 19 APRIL 1989
START HOUR: 0900

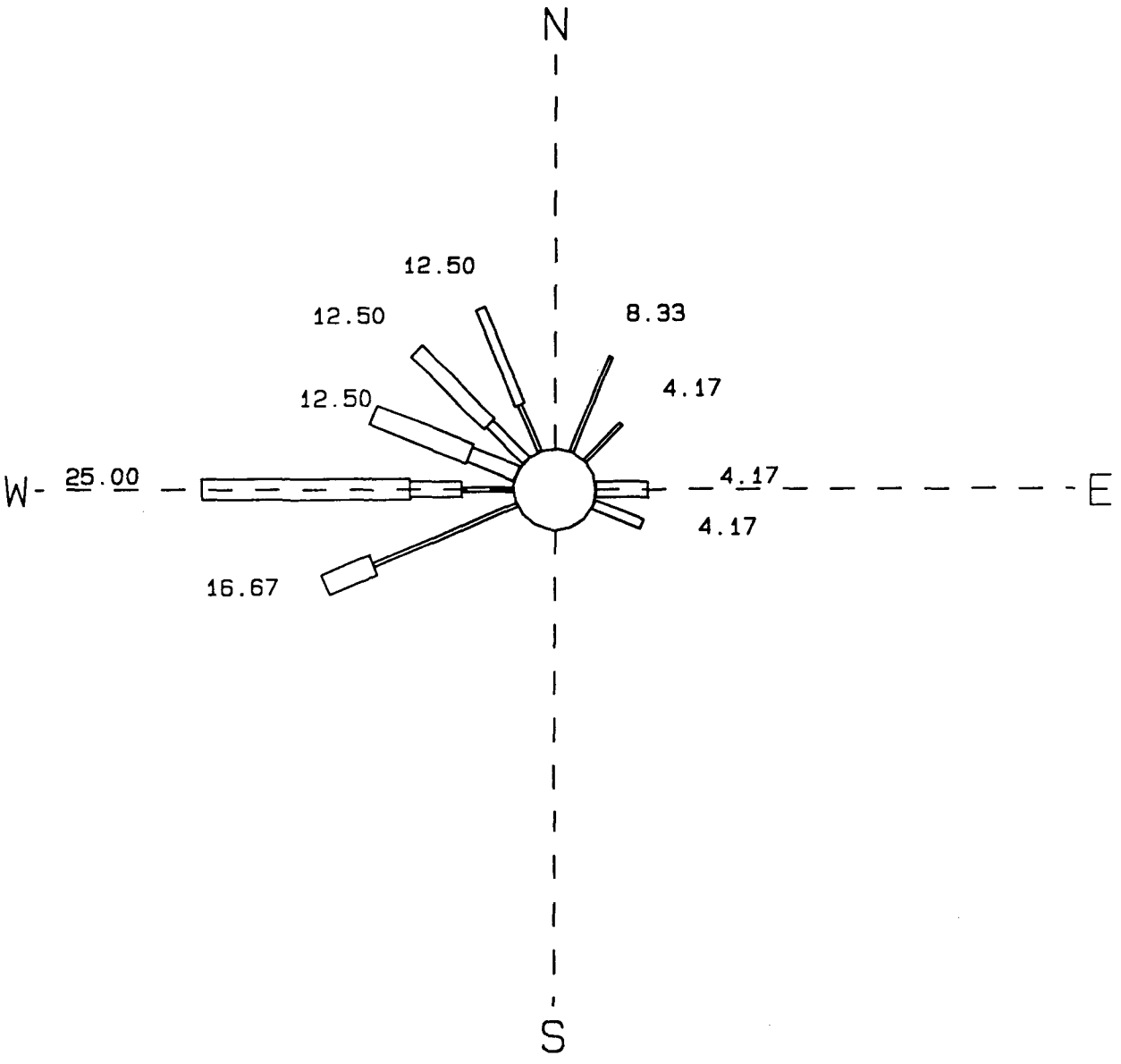

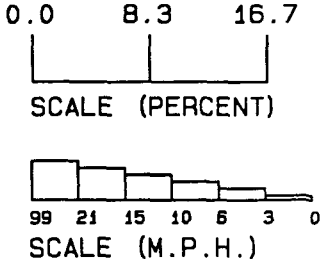

TOTAL HOURS:	24
PERCENT CALM:	0.00
PERCENT MISSING:	0.00

NEW BEDFORD HARBOR
24-HOUR WIND ROSE
START DATE: 19 APRIL 1989
START HOUR: 0900

TOTAL HOURS - 24
PERCENT CALM - .00
PERCENT MISSING - .00

WIND DIRECTION	WIND SPEED CATAGORY (MPH) < 3	3 - 6	6 -10	10-15	15 - 21	> 21	TOTAL
N	.000	.000	.000	.000	.000	.000	.000
NNE	8.333	.000	.000	.000	.000	.000	8.333
NE	4.167	.000	.000	.000	.000	.000	4.167
ENE	.000	.000	.000	.000	.000	.000	.000
E	.000	.000	4.167	.000	.000	.000	4.167
ESE	.000	4.167	.000	.000	.000	.000	4.167
SE	.000	.000	.000	.000	.000	.000	.000
SSE	.000	.000	.000	.000	.000	.000	.000
S	.000	.000	.000	.000	.000	.000	.000
SSW	.000	.000	.000	.000	.000	.000	.000
SW	.000	.000	.000	.000	.000	.000	.000
WSW	12.500	.000	.000	4.167	.000	.000	16.667
W	4.167	.000	4.167	16.667	.000	.000	25.000
WNW	.000	.000	4.167	8.333	.000	.000	12.500
NW	.000	4.167	8.333	.000	.000	.000	12.500
NNW	4.167	8.333	.000	.000	.000	.000	12.500
ALL	33.333	16.667	20.833	29.167	.000	.000	100.000

NEW BEDFORD HARBOR
24-HOUR WIND ROSE
START DATE: 20 APRIL 1989
START HOUR: 0900

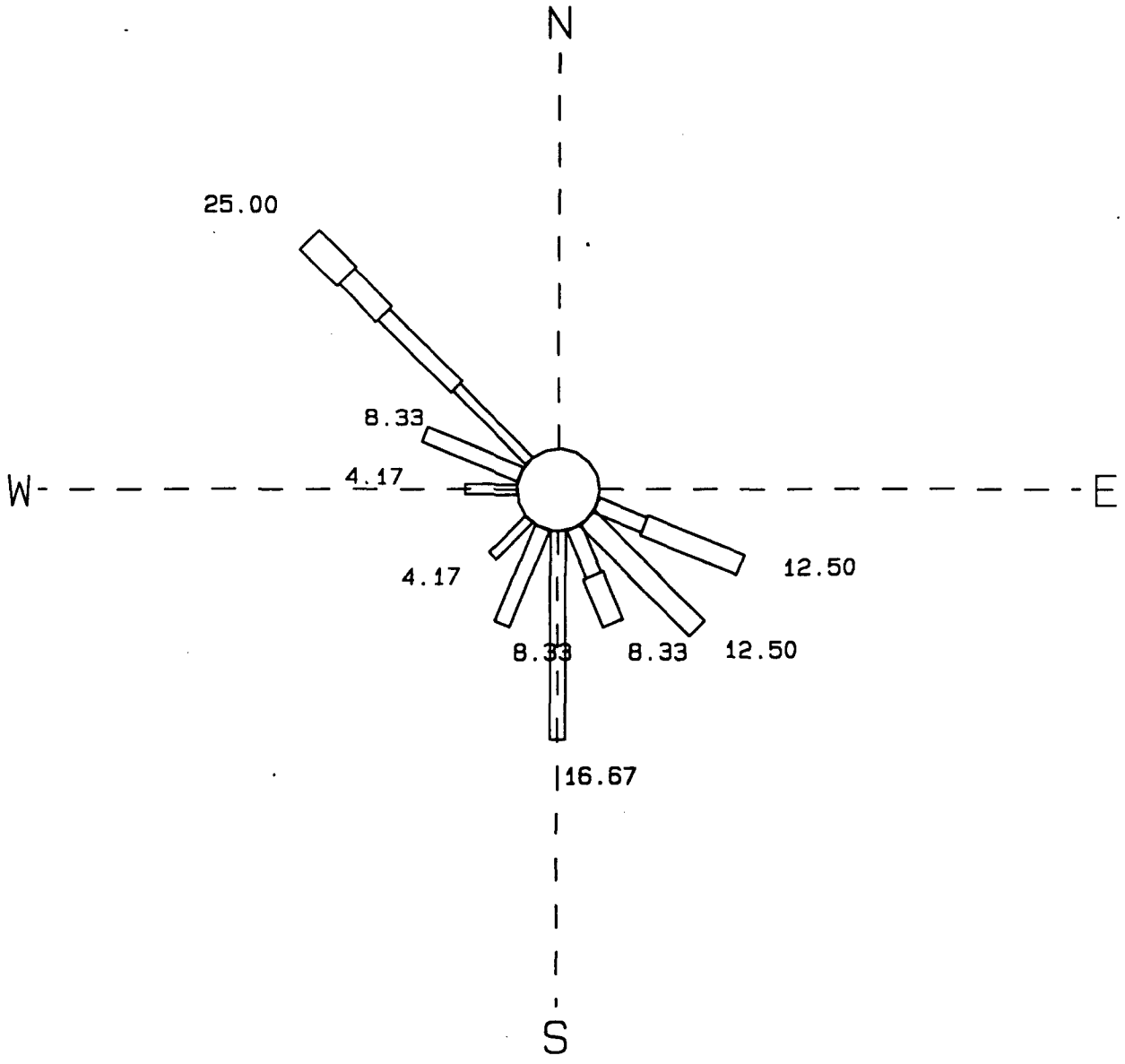

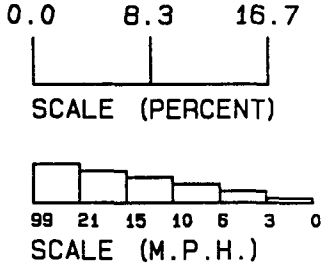

TOTAL HOURS:	24
PERCENT CALM:	0.00
PERCENT MISSING:	0.00

NEW BEDFORD HARBOR
24-HOUR WIND ROSE
START DATE: 20 APRIL 1989
START HOUR: 0900

TOTAL HOURS - 24
PERCENT CALM - .00
PERCENT MISSING - .00

WIND DIRECTION	WIND SPEED CATAGORY (MPH) < 3	3 - 6	6 -10	10-15	15 - 21	> 21	TOTAL
N	.000	.000	.000	.000	.000	.000	.000
NNE	.000	.000	.000	.000	.000	.000	.000
NE	.000	.000	.000	.000	.000	.000	.000
ENE	.000	.000	.000	.000	.000	.000	.000
E	.000	.000	.000	.000	.000	.000	.000
ESE	.000	.000	4.167	8.333	.000	.000	12.500
SE	.000	.000	.000	12.500	.000	.000	12.500
SSE	.000	.000	4.167	4.167	.000	.000	8.333
S	.000	.000	16.667	.000	.000	.000	16.667
SSW	.000	.000	8.333	.000	.000	.000	8.333
SW	.000	4.167	.000	.000	.000	.000	4.167
WSW	.000	.000	.000	.000	.000	.000	.000
W	.000	4.167	.000	.000	.000	.000	4.167
WNW	.000	.000	8.333	.000	.000	.000	8.333
NW	.000	8.333	8.333	4.167	4.167	.000	25.000
NNW	.000	.000	.000	.000	.000	.000	.000
ALL	.000	16.667	50.000	29.167	4.167	.000	100.000

NEW BEDFORD HARBOR
24-HOUR WIND ROSE
START DATE: 24 APRIL 1989
START HOUR: 0900

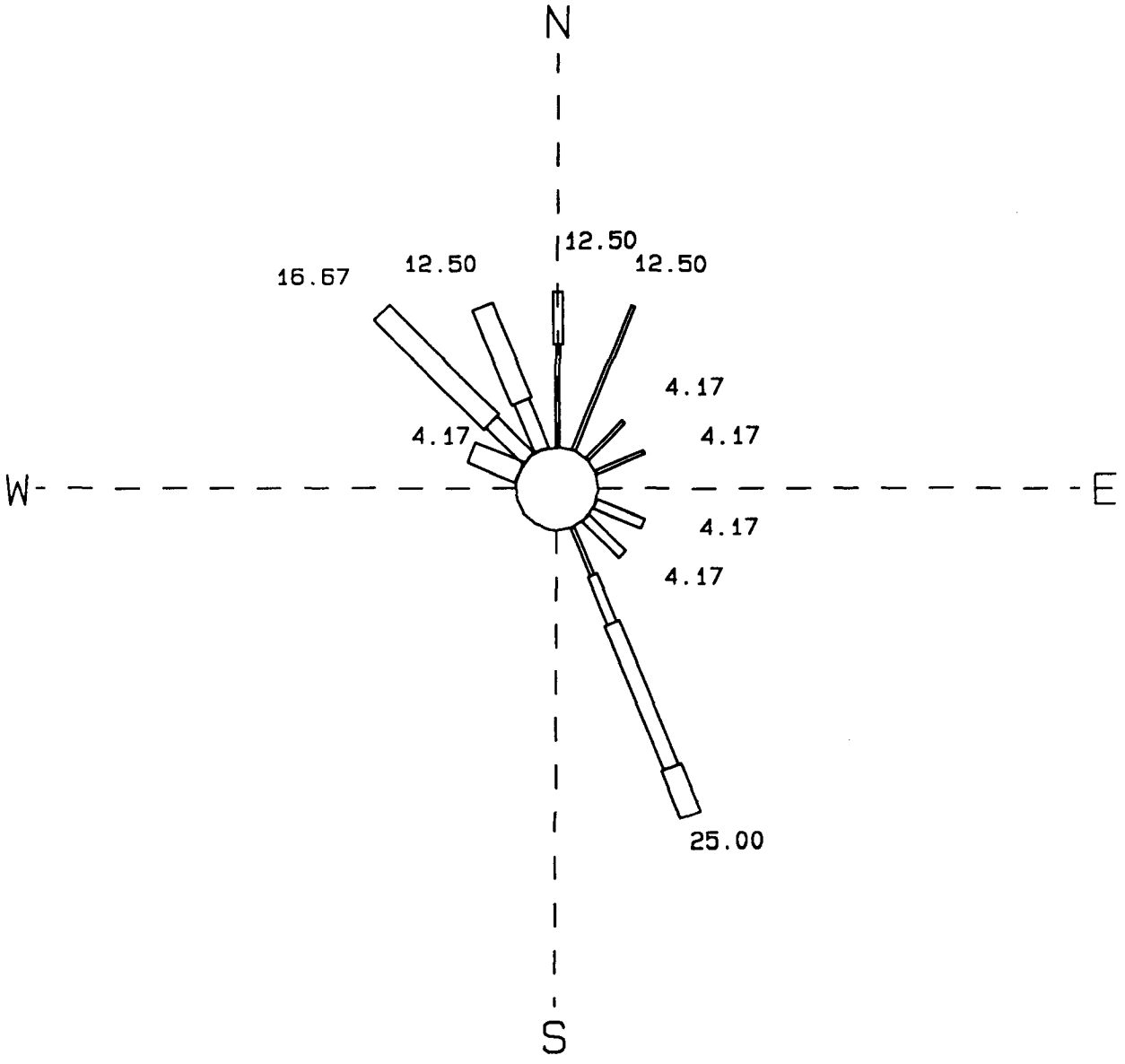

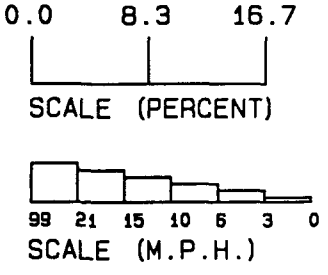

TOTAL HOURS:	24
PERCENT CALM:	0.00
PERCENT MISSING:	0.00

NEW BEDFORD HARBOR
24-HOUR WIND ROSE
START DATE: 27 APRIL 1989
START HOUR: 0900

TOTAL HOURS - 24
PERCENT CALM - .00
PERCENT MISSING - .00

WIND DIRECTION	WIND SPEED CATAGORY (MPH) < 3	3 - 6	6 -10	10-15	15 - 21	> 21	TOTAL
N	.000	.000	.000	.000	.000	.000	.000
NNE	.000	.000	.000	.000	.000	.000	.000
NE	.000	.000	.000	.000	.000	.000	.000
ENE	4.167	.000	.000	.000	.000	.000	4.167
E	.000	.000	.000	.000	.000	.000	.000
ESE	.000	.000	.000	.000	.000	.000	.000
SE	.000	.000	8.333	.000	.000	.000	8.333
SSE	.000	4.167	20.833	20.833	8.333	.000	54.167
S	.000	16.667	4.167	.000	.000	.000	20.833
SSW	4.167	.000	4.167	.000	.000	.000	8.333
SW	.000	.000	.000	.000	.000	.000	.000
WSW	.000	.000	.000	.000	.000	.000	.000
W	.000	.000	.000	.000	.000	.000	.000
WNW	.000	.000	.000	.000	.000	.000	.000
NW	.000	.000	.000	.000	.000	.000	.000
NNW	.000	.000	4.167	.000	.000	.000	4.167
ALL	8.333	20.833	41.667	20.833	8.333	.000	100.000

NEW BEDFORD HARBOR
24-HOUR WIND ROSE
START DATE: 25 APRIL 1989
START HOUR: 0900

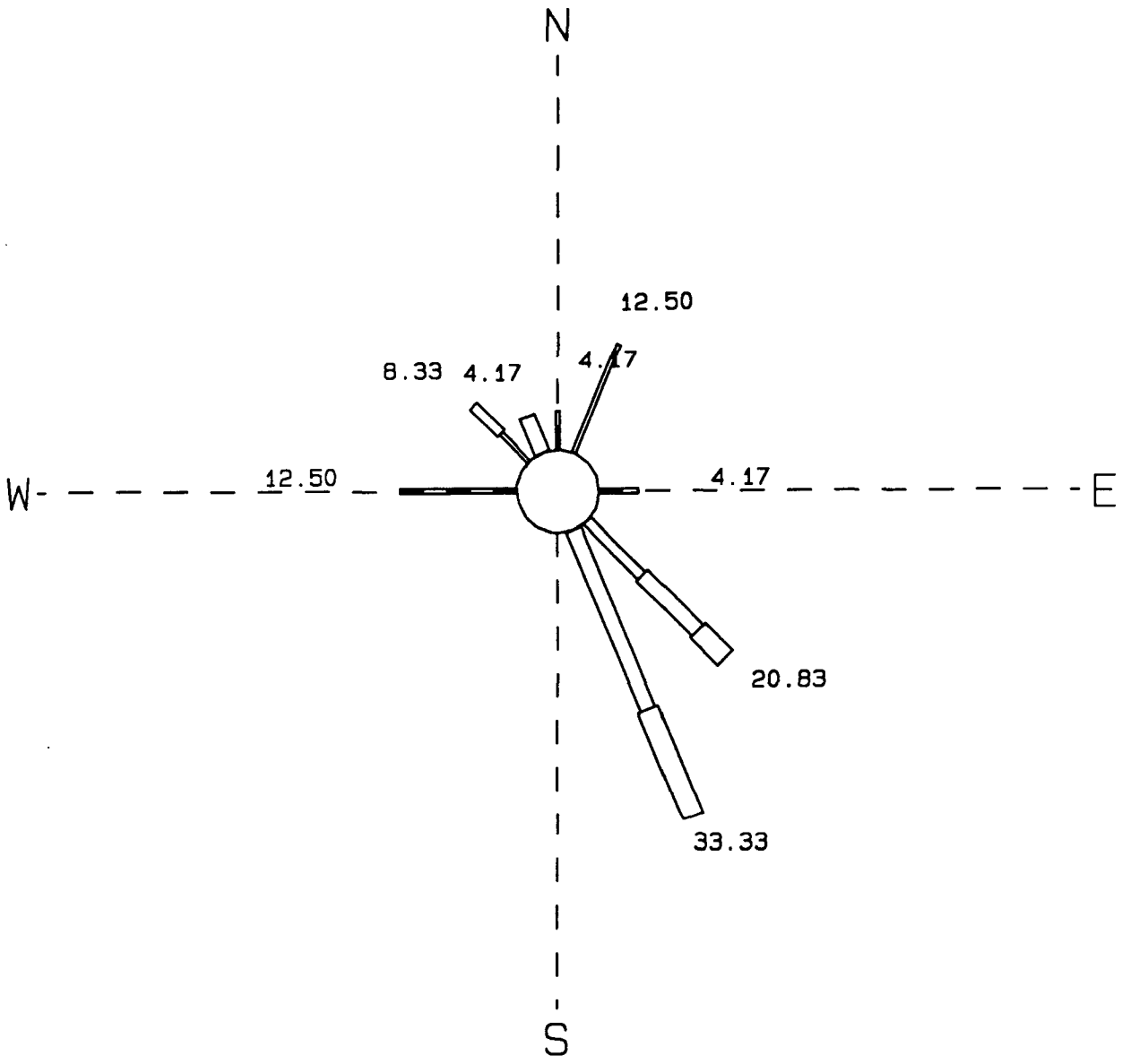

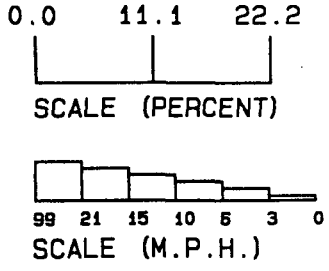

TOTAL HOURS:	24
PERCENT CALM:	0.00
PERCENT MISSING:	0.00

NEW BEDFORD HARBOR
24-HOUR WIND ROSE
START DATE: 25 APRIL 1989
START HOUR: 0900

TOTAL HOURS - 24
PERCENT CALM - .00
PERCENT MISSING - .00

WIND DIRECTION	WIND SPEED CATAGORY (MPH) < 3	3 - 6	6 -10	10-15	15 - 21	> 21	TOTAL
N	4.167	.000	.000	.000	.000	.000	4.167
NNE	12.500	.000	.000	.000	.000	.000	12.500
NE	.000	.000	.000	.000	.000	.000	.000
ENE	.000	.000	.000	.000	.000	.000	.000
E	4.167	.000	.000	.000	.000	.000	4.167
ESE	.000	.000	.000	.000	.000	.000	.000
SE	.000	8.333	8.333	4.167	.000	.000	20.833
SSE	.000	.000	20.833	12.500	.000	.000	33.333
S	.000	.000	.000	.000	.000	.000	.000
SSW	.000	.000	.000	.000	.000	.000	.000
SW	.000	.000	.000	.000	.000	.000	.000
WSW	.000	.000	.000	.000	.000	.000	.000
W	12.500	.000	.000	.000	.000	.000	12.500
WNW	.000	.000	.000	.000	.000	.000	.000
NW	4.167	4.167	.000	.000	.000	.000	8.333
NNW	.000	.000	4.167	.000	.000	.000	4.167
ALL	37.500	12.500	33.333	16.667	.000	.000	100.000

NEW BEDFORD HARBOR
24-HOUR WIND ROSE
START DATE: 26 APRIL 1989
START HOUR: 0900

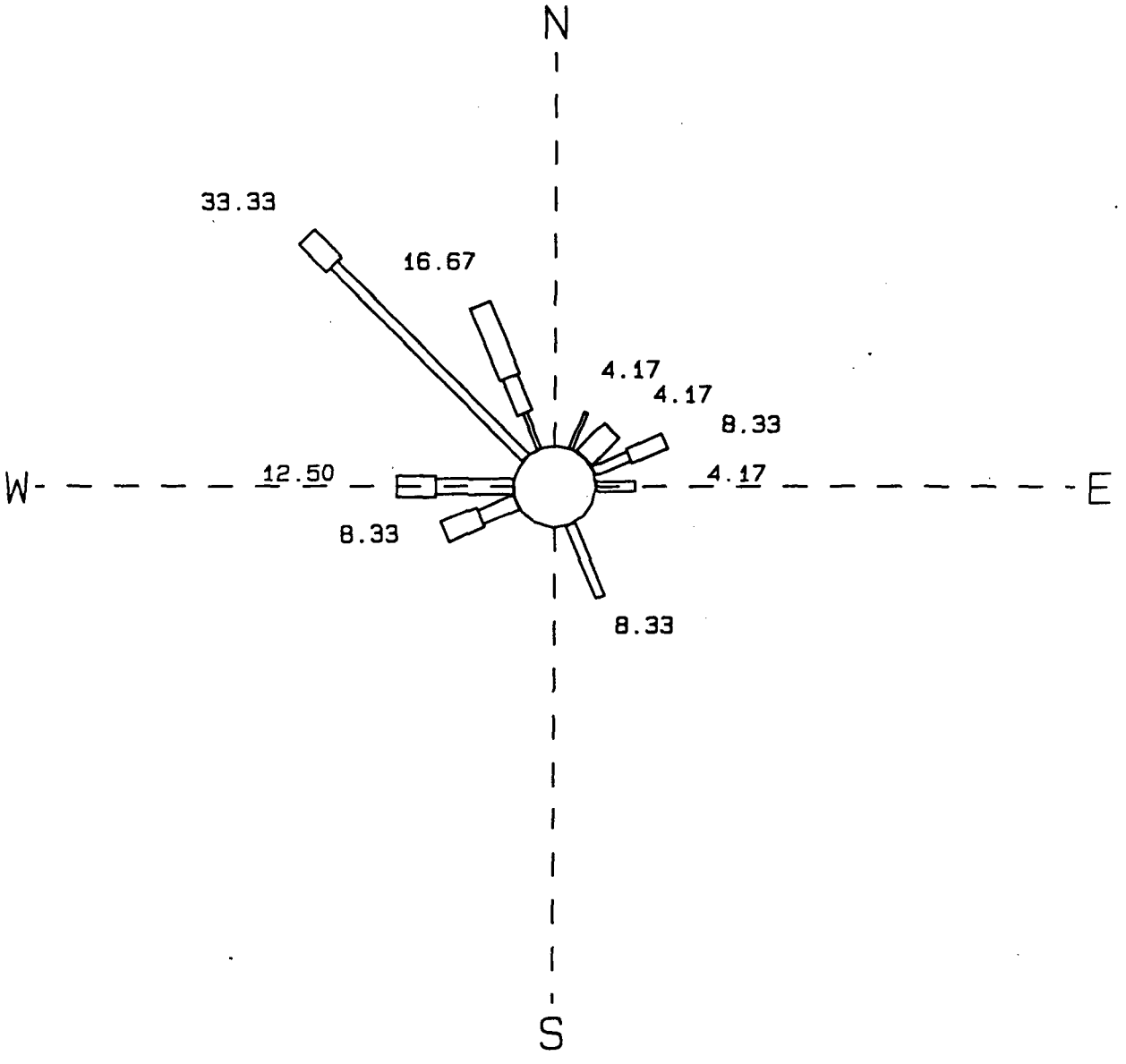

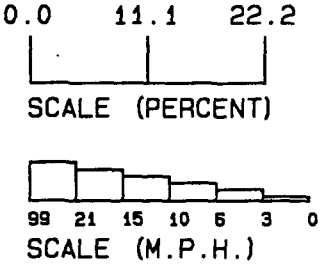

TOTAL HOURS:	24
PERCENT CALM:	0.00
PERCENT MISSING:	0.00

NEW BEDFORD HARBOR
24-HOUR WIND ROSE
START DATE: 26 APRIL 1989
START HOUR: 0900

TOTAL HOURS - 24
PERCENT CALM - .00
PERCENT MISSING - .00

WIND DIRECTION	WIND SPEED CATAGORY (MPH) < 3	3 - 6	6 -10	10-15	15 - 21	> 21	TOTAL
N	.000	.000	.000	.000	.000	.000	.000
NNE	4.167	.000	.000	.000	.000	.000	4.167
NE	.000	.000	.000	4.167	.000	.000	4.167
ENE	.000	4.167	4.167	.000	.000	.000	8.333
E	.000	4.167	.000	.000	.000	.000	4.167
ESE	.000	.000	.000	.000	.000	.000	.000
SE	.000	.000	.000	.000	.000	.000	.000
SSE	.000	8.333	.000	.000	.000	.000	8.333
S	.000	.000	.000	.000	.000	.000	.000
SSW	.000	.000	.000	.000	.000	.000	.000
SW	.000	.000	.000	.000	.000	.000	.000
WSW	.000	.000	4.167	4.167	.000	.000	8.333
W	.000	.000	8.333	4.167	.000	.000	12.500
WNW	.000	.000	.000	.000	.000	.000	.000
NW	.000	29.167	.000	4.167	.000	.000	33.333
NNW	4.167	.000	4.167	8.333	.000	.000	16.667
ALL	8.333	45.833	20.833	25.000	.000	.000	100.000

NEW BEDFORD HARBOR
24-HOUR WIND ROSE
START DATE: 27 APRIL 1989
START HOUR: 0900

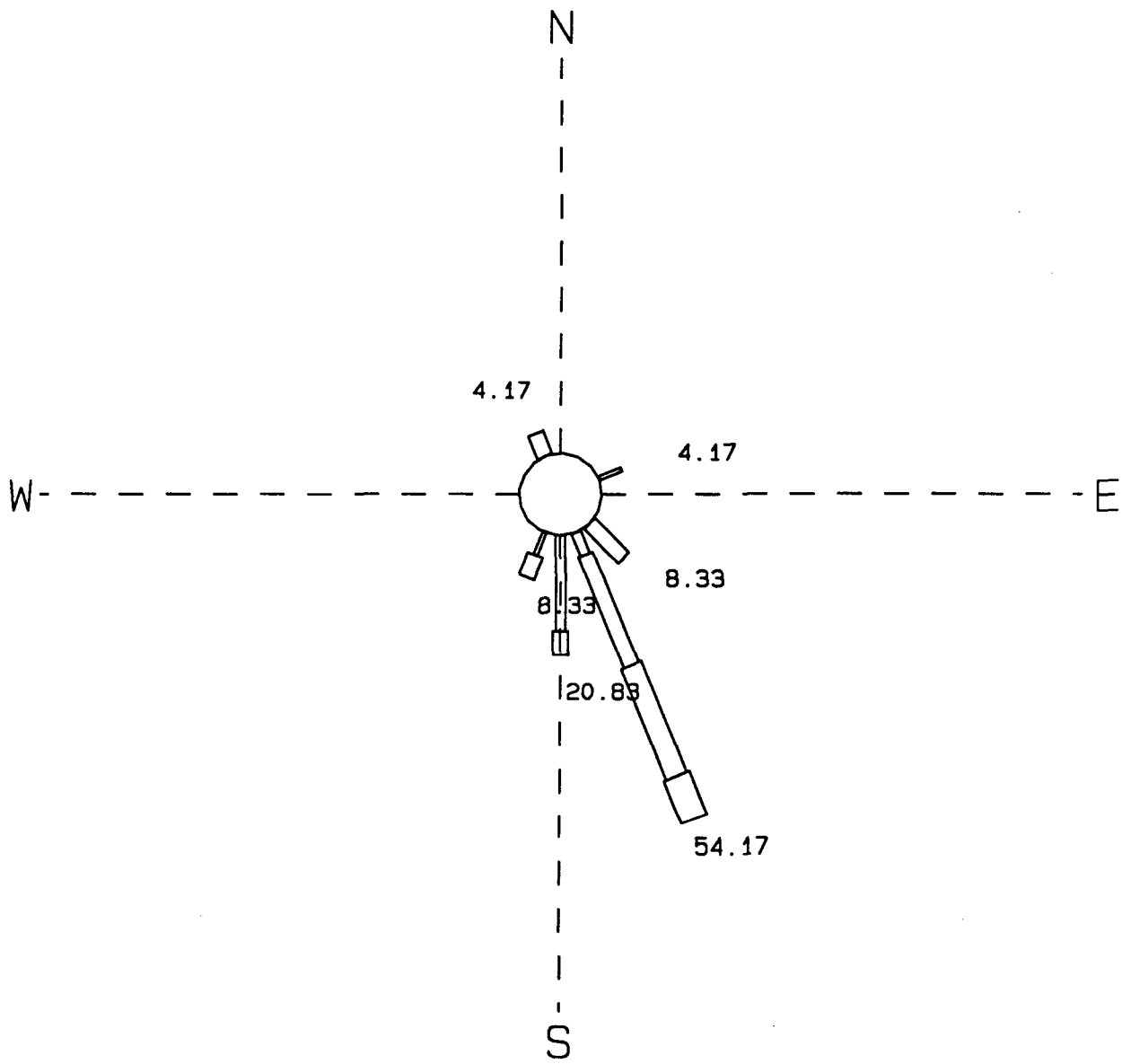

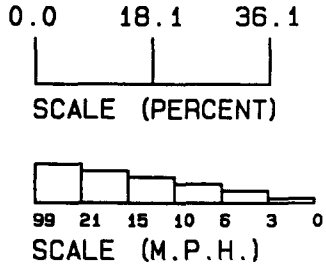

TOTAL HOURS:	24
PERCENT CALM:	0.00
PERCENT MISSING:	0.00

NEW BEDFORD HARBOR
24-HOUR WIND ROSE
START DATE: 24 APRIL 1989
START HOUR: 0900

TOTAL HOURS - 24
PERCENT CALM - .00
PERCENT MISSING - .00

WIND DIRECTION	WIND SPEED CATAGORY (MPH) < 3	3 - 6	6 -10	10-15	15 - 21	> 21	TOTAL
N	8.333	4.167	.000	.000	.000	.000	12.500
NNE	12.500	.000	.000	.000	.000	.000	12.500
NE	4.167	.000	.000	.000	.000	.000	4.167
ENE	4.167	.000	.000	.000	.000	.000	4.167
E	.000	.000	.000	.000	.000	.000	.000
ESE	.000	4.167	.000	.000	.000	.000	4.167
SE	.000	4.167	.000	.000	.000	.000	4.167
SSE	4.167	4.167	12.500	4.167	.000	.000	25.000
S	.000	.000	.000	.000	.000	.000	.000
SSW	.000	.000	.000	.000	.000	.000	.000
SW	.000	.000	.000	.000	.000	.000	.000
WSW	.000	.000	.000	.000	.000	.000	.000
W	.000	.000	.000	.000	.000	.000	.000
WNW	.000	.000	.000	4.167	.000	.000	4.167
NW	.000	.000	4.167	12.500	.000	.000	16.667
NNW	.000	.000	4.167	8.333	.000	.000	12.500
ALL	33.333	16.667	20.833	29.167	.000	.000	100.000