Click Here to Return to AR Index

6.4

Golder Associates Inc.
CONSULTING ENGINEERS

Industri-Plex
6.4
OU01.

SDMS DocID 000230857

SDMS # 230857

6

REMEDIAL DESIGN

CONCEPTUAL GROUNDWATER REMEDIATION SYSTEM REPORT

INDUSTRI-PLEX SITE
WOBURN, MASSACHUSETTS

Prepared for:

Industri-Plex Site Remedial Trust
800 North Linbergh Boulevard
St. Louis, Missouri 63167

DISTRIBUTION:

7 Copies - Industri-Plex Site Remedial Trust
2 Copies - U.S. Environmental Protection Agency
1 Copy - Massachusetts Dept. of Environmental Protection
1 Copy - NUS Corporation
1 Copy - STV/Sanders and Thomas
2 Copies - Golder Associates Inc.

August 1990 Project No.: 893-6260

GOLDER ASSOCIATES INC. • 20000 HORIZON WAY, SUITE 500, MT. LAUREL, NEW JERSEY 08054 • TELEPHONE (609) 273-1110 • FACSIMILE (609) 273-0778

OFFICES IN UNITED STATES • CANADA • UNITED KINGDOM • SWEDEN • ITALY • AUSTRALIA

Golder Associates Inc.
CONSULTING ENGINEERS

August 31, 1990 Project No. 893-6260

United States Environmental Protection Agency, Region I
J.F.K. Federal Building, HRS-CAN-3
Boston, Massachusetts 02203-2211

Attn: Marilyn M. Wade, P.E.
Remedial Project Manager

RE: INDUSTRI-PLEX SITE REMEDIAL DESIGN
CONCEPTUAL GROUNDWATER REMEDIATION SYSTEM REPORT

Dear Ms. Wade:

On behalf of the Industri-Plex Site Remedial Trust, we are submitting this Conceptual Groundwater Remediation System Report for the Industri-Plex Site in Woburn, Massachusetts. This report is being submitted in accordance with the Remedial Design Work Plan (RDWP) reporting requirements (RDWP Section 4.2.2.10, p. 37).

The conceptual groundwater remediation system for the site is shown in the attached flow system diagrams and piping and instrumentation control diagrams prepared by STV/ Sanders and Thomas. Groundwater from extraction wells will be transported to a collection tank for temporary storage, and then transferred to the treatment system at a fixed rate. The extraction well design and anticipated groundwater flow rate will not be available until completion of the aquifer testing program being conducted under Pre Design Investigation (PDI) Task GW-2. However, the groundwater extraction system will consist of several production wells oriented perpendicular and/or parallel to the axis of the groundwater plume.

The groundwater treatment system will be sized to accomodate the flow rate determined from the PDI Task GW-2 investigation. The system will be designed to treat groundwater containing arsenic, cadmium, lead, and zinc, odiferous constituents (H_2S and methyl mercaptan) and volatile organic compounds (e.g., toluene and benzene). After treatment, the concentrations of these subtances in the discharge water will meet the levels required by the Applicable or Relevant and Appropriate Requirements (ARARs) being developed as part of the remedial design work. The ARARs will be proposed in the 30% design stage submittal.

As shown in the attached figures, the conceptual groundwater treatment system consists of the following elements:

1. Water Collection System to collect groundwater from the extraction wells into an equilization tank;
2. Oxidation System to remove odors;
3. Filtration System to remove any precipitates present after the oxidation process;
4. Air Stripping System with carbon absorber beds to remove volatile organic compounds, such as toluene and benzene in the off-gas;
5. Carbon Adsorption filtering to remove organic compounds in the water after air stripping;
6. Reagent System to provide reagents at suitable concentrations in other parts of the plant;
7. Ion Exchange System, if required, to remove heavy metal ions in the groundwater;
8. Backwash Treatment System to regenerate the ion exchange beds and concentrate the metals;
9. Clean Water Disposal System to deliver water to the recharge basin (subsurface leaching pit), and, if necessary because of the effluent flow rate, to a POTW or stream.

The groundwater treatment system will also incorporate electrical and instrumentation systems, that will be developed as the design proceeds.

The conceptual groundwater remediation system for the site will be refined as additional data are obtained from the PDI tasks for Plume Delineation (Task GW-1, Phase 2), Hydrogeologic Characterization for Extraction/Recharge System (Task GW-2), and Groundwater Treatability (Task GW-3). If you have any questions, please contact us.

Very truly yours,

GOLDER ASSOCIATES INC.

Kenneth R. Moser

Kenneth R. Moser
Associate

C:62600831
cc: J. Naparstek, MDEP
A. Ostrofsky, NUS
D. L. Baumgartner, ISRT
W. L. Smull, ISRT
J. Marmo, STV/Sanders and Thomas

PROCESS FLOW SHEETS

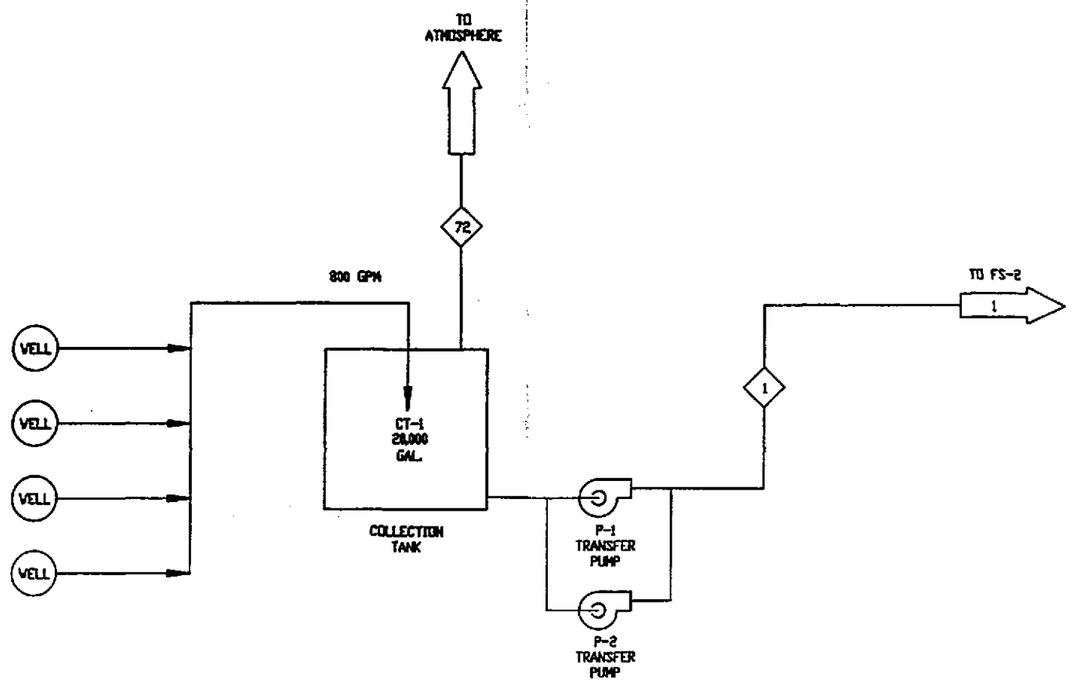

STREAM NUMBER	1	72
STREAM NAME	WELL WATER	COLLECTION TANK VENT
WATER (LB/HR)	400,420	—
AIR (LB/HR)	—	—
DRY SOLIDS (LB/HR)	—	—
BENZENE (ppb)	1,150	—
TOLUENE (ppb)	7,300	—
OTHER ORGANICS (ppb)	3,100	—
ARSENIC (ppb)	630	—
CADMIUM (ppb)	11	—
LEAD (ppb)	80	—
ZINC (ppb)	2,500	—
OTHER METALS (ppb)	434,234	—
SULFUR DIOXIDE (ppb)	—	—
SODIUM CHLORIDE (ppb)	—	—
FLOW RATE (GPM)	800	—
GAS VOLUME (ACFM)	—	—
GAS VOLUME (SCFM)	—	—
PIPE DIAMETER (IN.)	—	—
PIPE MATERIAL	—	—

STV/SANDERS & THOMAS
ENGINEERS ARCHITECTS PLANNERS

PROJECT TITLE
INDUSTRI-PLEX SITE
WOBURN, MASSACHUSETTS

SHEET TITLE
GROUND WATER TREATMENT SYSTEM
PROCESS FLOW DIAGRAM
COLLECTION SYSTEM

SCALE	DATE ISSUED	PROJECT NUMBER	SHEET NUMBER
NONE	7/10/90	08-6209	FS-1

DRAWN BY J.D. | CHK'D BY | APP'D BY

NO.	REVISIONS	DATE	BY	CHK'D

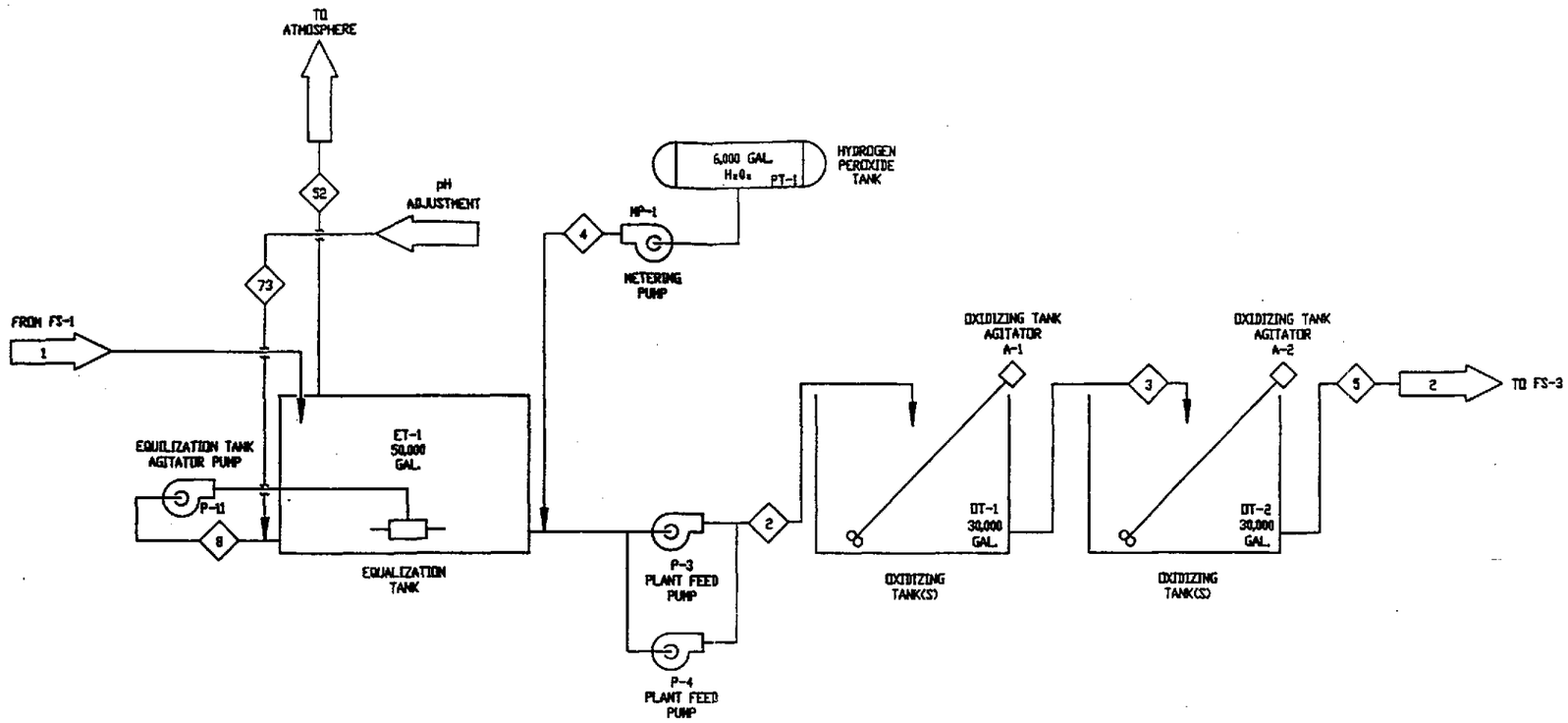

STREAM NUMBER	2	3	4	5	8	52	73
STREAM NAME	EQUALIZED WELL WATER	FIRST OXIDIZER DISCHARGE	HYDROGEN PEROXIDE	SECOND OXIDIZER DISCHARGE	AGITATION STREAM	EQUALIZATION TANK VENT	pH ADJUST.
WATER (LB/HR)	400,420	—	—	—	—	—	—
AIR (LB/HR)	—	—	—	—	—	—	—
DRY SOLIDS (LB/HR)	—	—	—	—	—	—	—
BENZENE (ppb)	1,150	—	—	—	1,150	—	—
TOLUENE (ppb)	7,300	—	—	—	7,300	—	—
OTHER ORGANICS (ppb)	3,100	—	—	—	3,100	—	—
ARSENIC (ppb)	630	—	—	—	630	—	—
CADMIUM (ppb)	11	—	—	—	11	—	—
LEAD (ppb)	80	—	—	—	80	—	—
ZINC (ppb)	2,500	—	—	—	2,500	—	—
OTHER METALS (ppb)	434,234	—	—	—	434,234	—	—
SULFUR DIOXIDE (ppb)	—	—	—	—	—	—	—
SODIUM CHLORIDE (ppb)	—	—	—	—	—	—	—
FLOW RATE (GPM)	800	—	—	—	—	—	—
GAS VOLUME (ACFM)	—	—	—	—	—	—	—
GAS VOLUME (SCFM)	—	—	—	—	—	—	—
PIPE DIAMETER (IN.)	—	—	—	—	—	—	—
PIPE MATERIAL	—	—	—	—	—	—	—

NO.	REVISIONS	DATE	BY	CHK'D

STV/SANDERS & THOMAS
ENGINEERS ARCHITECTS PLANNERS
Executive Offices Pittsburgh, PA

PROJECT TITLE
INDUSTRI-PLEX SITE
WOBURN, MASSACHUSETTS

SHEET TITLE
GROUND WATER TREATMENT SYSTEM
PROCESS FLOW DIAGRAM
OXIDATION SYSTEM

SCALE	DATE ISSUED	PROJECT NUMBER	SHEET NUMBER
NONE	8/20/90	08-6209	FS-2

DRAWN BY J.D. CHK'D BY APP'D BY

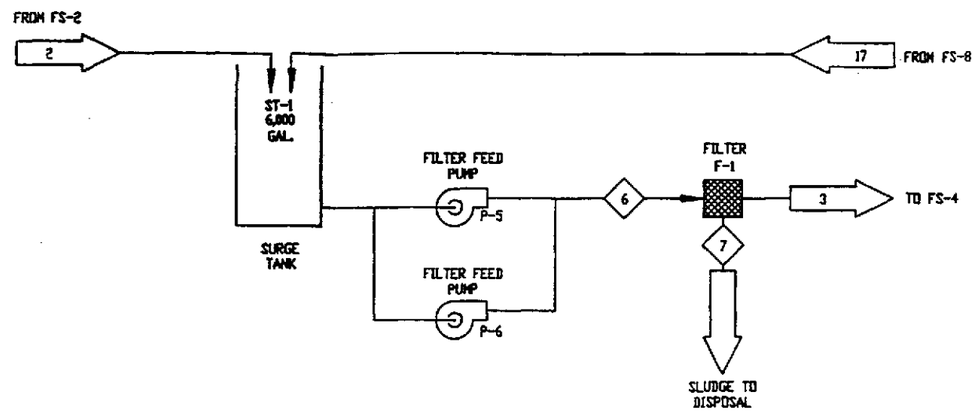

STREAM NUMBER	6	7
STREAM NAME	FILTER FEED WATER	SLUDGE
WATER (LB/HR)	—	—
AIR (LB/HR)	—	—
DRY SOLIDS (LB/HR)	—	—
BENZENE (ppb)	—	—
TOLUENE (ppb)	—	—
OTHER ORGANICS (ppb)	—	—
ARSENIC (ppb)	—	—
CADMIUM (ppb)	—	—
LEAD (ppb)	—	—
ZINC (ppb)	—	—
OTHER METALS (ppb)	—	—
SULFUR DIOXIDE (ppb)	—	—
SODIUM CHLORIDE (ppb)	—	—
FLOW RATE (GPM)	—	—
GAS VOLUME (ACFM)	—	—
GAS VOLUME (SCFM)	—	—
PIPE DIAMETER (IN.)	—	—
PIPE MATERIAL	—	—

STV/SANDERS & THOMAS
ENGINEERS ARCHITECTS PLANNERS

PROJECT TITLE
INDUSTRI-PLEX SITE
WOBURN, MASSACHUSETTS

SHEET TITLE
GROUND WATER TREATMENT SYSTEM
PROCESS FLOW DIAGRAM
FILTRATION SYSTEM

SCALE	DATE ISSUED	PROJECT NUMBER	SHEET NUMBER
NONE	7/2/90	08-6209	FS-3

DRAWN BY J.D. | CHK'D BY | APP'D BY

NO.	REVISIONS	DATE	BY	CHK'D

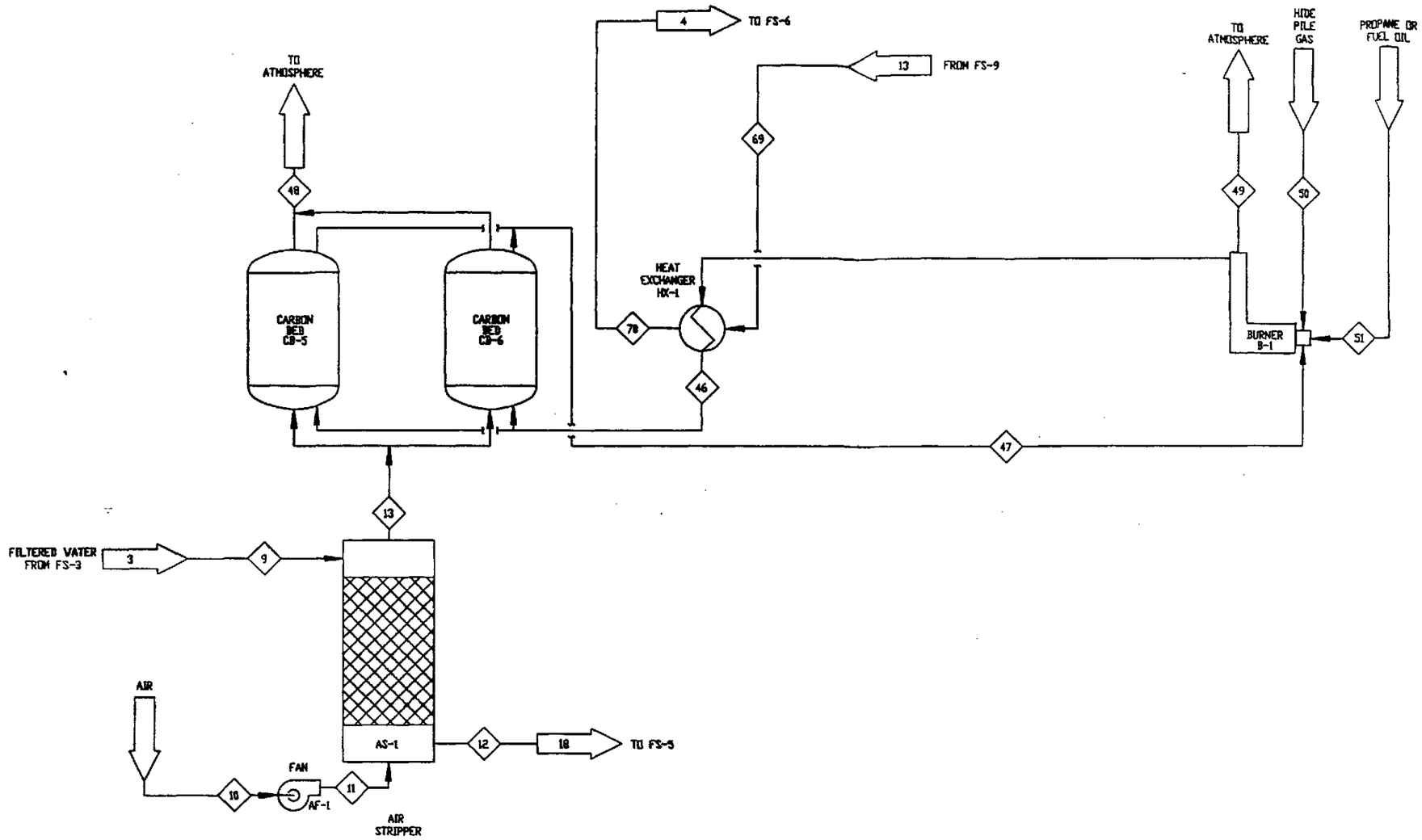

STREAM NUMBER	9	10	11	12	13	14	46	47	48	49	50	51	69	70
STREAM NAME	STRIPPER FEED WATER	AIR	STRIPPER INLET AIR	STRIPPER DISCHARGE WATER	STRIPPER DISCHARGE AIR	STRIPPER PUMP DISCHARGE	HOT REGEN. GAS	USED REGEN. GAS	DISCHARGE AIR	BURNER FLUE GAS	HIDE PILE GAS	NATURAL GAS	COLD WATER	HOT WATER
WATER (LB/HR)	—	—	—	—	—	—	—	—	—	—	—	—	—	—
AIR (LB/HR)	—	—	—	—	—	—	—	—	—	—	—	—	—	—
DRY SOLIDS (LB/HR)	—	—	—	—	—	—	—	—	—	—	—	—	—	—
BENZENE (ppb)	—	—	—	—	—	—	—	—	—	—	—	—	—	—
TOLUENE (ppb)	—	—	—	—	—	—	—	—	—	—	—	—	—	—
OTHER ORGANICS (ppb)	—	—	—	—	—	—	—	—	—	—	—	—	—	—
ARSENIC (ppb)	—	—	—	—	—	—	—	—	—	—	—	—	—	—
CADMIUM (ppb)	—	—	—	—	—	—	—	—	—	—	—	—	—	—
LEAD (ppb)	—	—	—	—	—	—	—	—	—	—	—	—	—	—
ZINC (ppb)	—	—	—	—	—	—	—	—	—	—	—	—	—	—
OTHER METALS (ppb)	—	—	—	—	—	—	—	—	—	—	—	—	—	—
SULFUR DIOXIDE (ppb)	—	—	—	—	—	—	—	—	—	—	—	—	—	—
SODIUM CHLORIDE (ppb)	—	—	—	—	—	—	—	—	—	—	—	—	—	—
FLOW RATE (GPM)	—	—	—	—	—	—	—	—	—	—	—	—	—	—
GAS VOLUME (ACFM)	—	—	—	—	—	—	—	—	—	—	—	—	—	—
GAS VOLUME (SCFM)	—	—	—	—	—	—	—	—	—	—	—	—	—	—
PIPE DIAMETER (IN.)	—	—	—	—	—	—	—	—	—	—	—	—	—	—
PIPE MATERIAL	—	—	—	—	—	—	—	—	—	—	—	—	—	—
	—	—	—	—	—	—	—	—	—	—	—	—	—	—

NO.	REVISIONS	DATE	BY	CHK'D

STV/SANDERS & THOMAS
ENGINEERS ARCHITECTS PLANNERS

PROJECT TITLE
INDUSTRI-PLEX SITE
WOBURN, MASSACHUSETTS

SHEET TITLE
GROUND WATER TREATMENT SYSTEM
PROCESS FLOW DIAGRAM
AIR STRIPPING SYSTEM

SCALE	DATE ISSUED	PROJECT NUMBER	SHEET NUMBER
NONE	7/10/90	08-6209	FS-4

DRAWN BY J.D. | CHK'D BY | APP'D BY

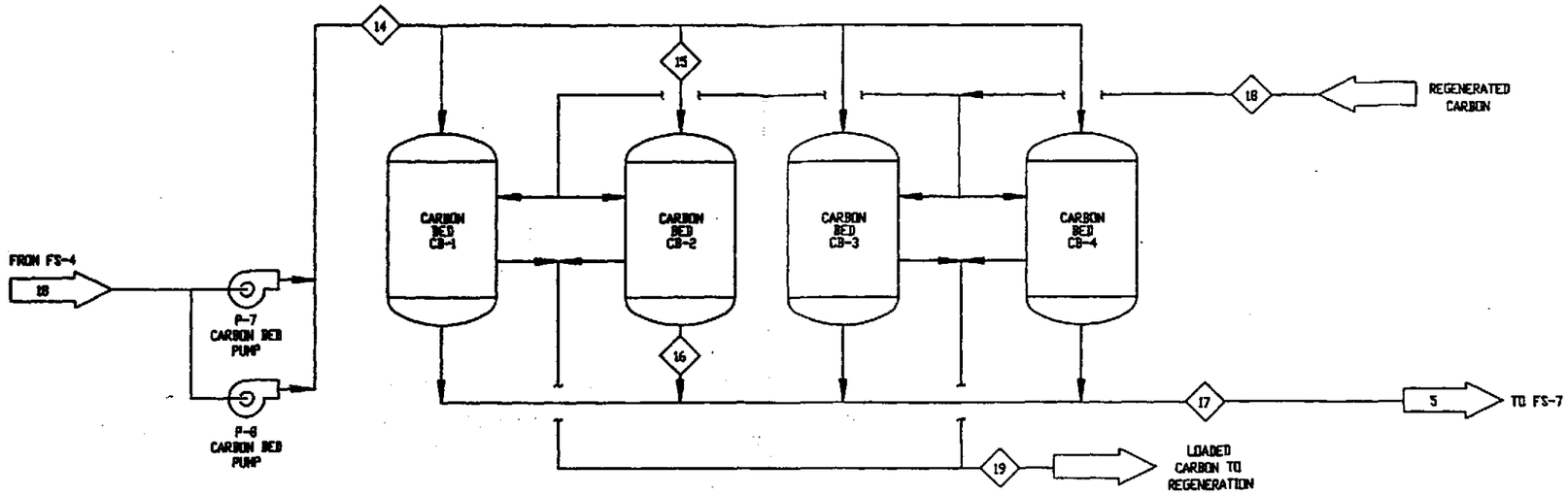

STREAM NUMBER	15	16	17	18	19
STREAM NAME	CARBON BED FEED	CARBON BED DISCHARGE	ORGANIC FREE WATER	REGEN. CARBON	LOADED CARBON
WATER (LB/HR)	—	—	—	—	—
AIR (LB/HR)	—	—	—	—	—
DRY SOLIDS (LB/HR)	—	—	—	—	—
BENZENE (ppb)	—	—	—	—	—
TOLUENE (ppb)	—	—	—	—	—
OTHER ORGANICS (ppb)	—	—	—	—	—
ARSENIC (ppb)	—	—	—	—	—
CADMIUM (ppb)	—	—	—	—	—
LEAD (ppb)	—	—	—	—	—
ZINC (ppb)	—	—	—	—	—
OTHER METALS (ppb)	—	—	—	—	—
SULFUR DIOXIDE (ppb)	—	—	—	—	—
SODIUM CHLORIDE (ppb)	—	—	—	—	—
FLOW RATE (GPM)	—	—	—	—	—
GAS VOLUME (ACFM)	—	—	—	—	—
GAS VOLUME (SCFM)	—	—	—	—	—
PIPE DIAMETER (IN)	—	—	—	—	—
PIPE MATERIAL	—	—	—	—	—

NO.	REVISIONS	DATE	BY	CHK'D

STV/SANDERS & THOMAS
ENGINEERS ARCHITECTS PLANNERS

PROJECT TITLE
INDUSTRI-PLEX SITE
WOBURN, MASSACHUSETTS

SHEET TITLE
GROUND WATER TREATMENT SYSTEM
PROCESS FLOW DIAGRAM
CARBON ADSORPTION SYSTEM

SCALE	DATE ISSUED	PROJECT NUMBER	SHEET NUMBER
NONE	7/10/90	08-6209	FS-5

DRAWN BY J.D. CHK'D BY APP'D BY

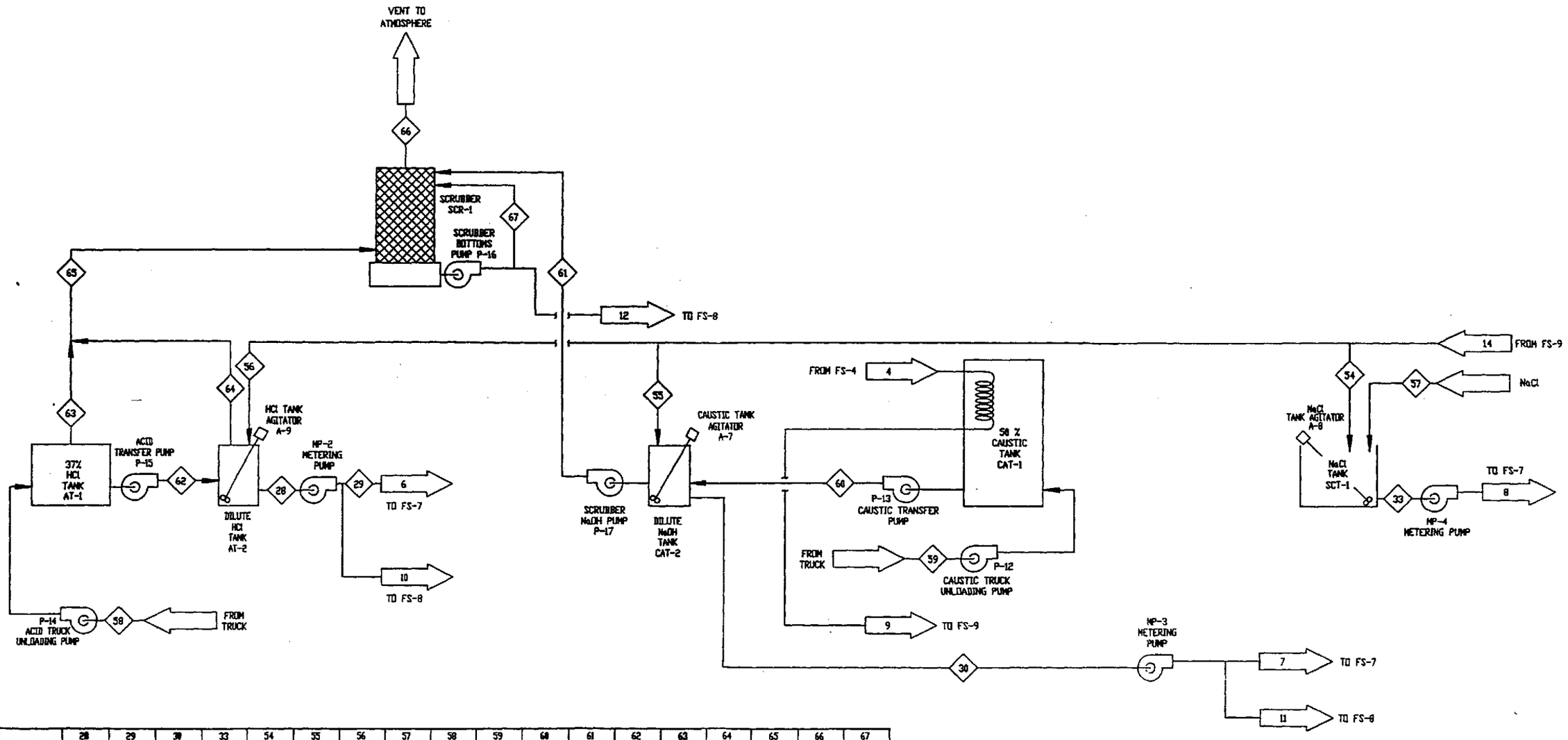

STREAM NUMBER	28	29	30	33	54	55	56	57	58	59	60	61	62	63	64	65	66	67
STREAM NAME	HCl PUMP SUPPLY	REGEN. HCl FEED	NaOH PUMP SUPPLY	REGEN. NaCl FEED	NaCl SOLUTION WATER	NaOH DILUTION WATER	HCl DILUTION WATER	NaCl	HCl	NaOH	NaOH TO DILUTION	DILUTE NaOH TO SCRUBBER	HCl TO DILUTION	HCl VENT	DILUTE HCl VENT	COMBINED HCl VENT	SCRUBBER AIR OUTLET	SCRUBBER RECIRC.
WATER (LB/HR)	—	—	—	—	—	—	—	—	—	—	—	—	—	—	—	—	—	—
AIR (LB/HR)	—	—	—	—	—	—	—	—	—	—	—	—	—	—	—	—	—	—
DRY SOLIDS (LB/HR)	—	—	—	—	—	—	—	—	—	—	—	—	—	—	—	—	—	—
BENZENE (ppb)	—	—	—	—	—	—	—	—	—	—	—	—	—	—	—	—	—	—
TOLUENE (ppb)	—	—	—	—	—	—	—	—	—	—	—	—	—	—	—	—	—	—
OTHER ORGANICS (ppb)	—	—	—	—	—	—	—	—	—	—	—	—	—	—	—	—	—	—
ARSENIC (ppb)	—	—	—	—	—	—	—	—	—	—	—	—	—	—	—	—	—	—
CADMIUM (ppb)	—	—	—	—	—	—	—	—	—	—	—	—	—	—	—	—	—	—
LEAD (ppb)	—	—	—	—	—	—	—	—	—	—	—	—	—	—	—	—	—	—
ZINC (ppb)	—	—	—	—	—	—	—	—	—	—	—	—	—	—	—	—	—	—
OTHER METALS (ppb)	—	—	—	—	—	—	—	—	—	—	—	—	—	—	—	—	—	—
SULFUR DIOXIDE (ppb)	—	—	—	—	—	—	—	—	—	—	—	—	—	—	—	—	—	—
SODIUM CHLORIDE (ppb)	—	—	—	—	—	—	—	—	—	—	—	—	—	—	—	—	—	—
FLOW RATE (GPM)	—	—	—	—	—	—	—	—	—	—	—	—	—	—	—	—	—	—
GAS VOLUME (ACFM)	—	—	—	—	—	—	—	—	—	—	—	—	—	—	—	—	—	—
GAS VOLUME (SCFM)	—	—	—	—	—	—	—	—	—	—	—	—	—	—	—	—	—	—
PIPE DIAMETER (IN)	—	—	—	—	—	—	—	—	—	—	—	—	—	—	—	—	—	—
PIPE MATERIAL	—	—	—	—	—	—	—	—	—	—	—	—	—	—	—	—	—	—
	—	—	—	—	—	—	—	—	—	—	—	—	—	—	—	—	—	—

NO.	REVISIONS	DATE	BY	CHK'D

STV/SANDERS & THOMAS
ENGINEERS ARCHITECTS PLANNERS

PROJECT TITLE
INDUSTRI-PLEX SITE
WOBURN, MASSACHUSETTS

SHEET TITLE
GROUND WATER TREATMENT SYSTEM
PROCESS FLOW DIAGRAM
REAGENT SYSTEMS

SCALE	DATE ISSUED	PROJECT NUMBER	SHEET NUMBER
NONE	8/20/90	08-6209	FS-6

DRAWN BY J.D. CHK'D BY APP'D BY

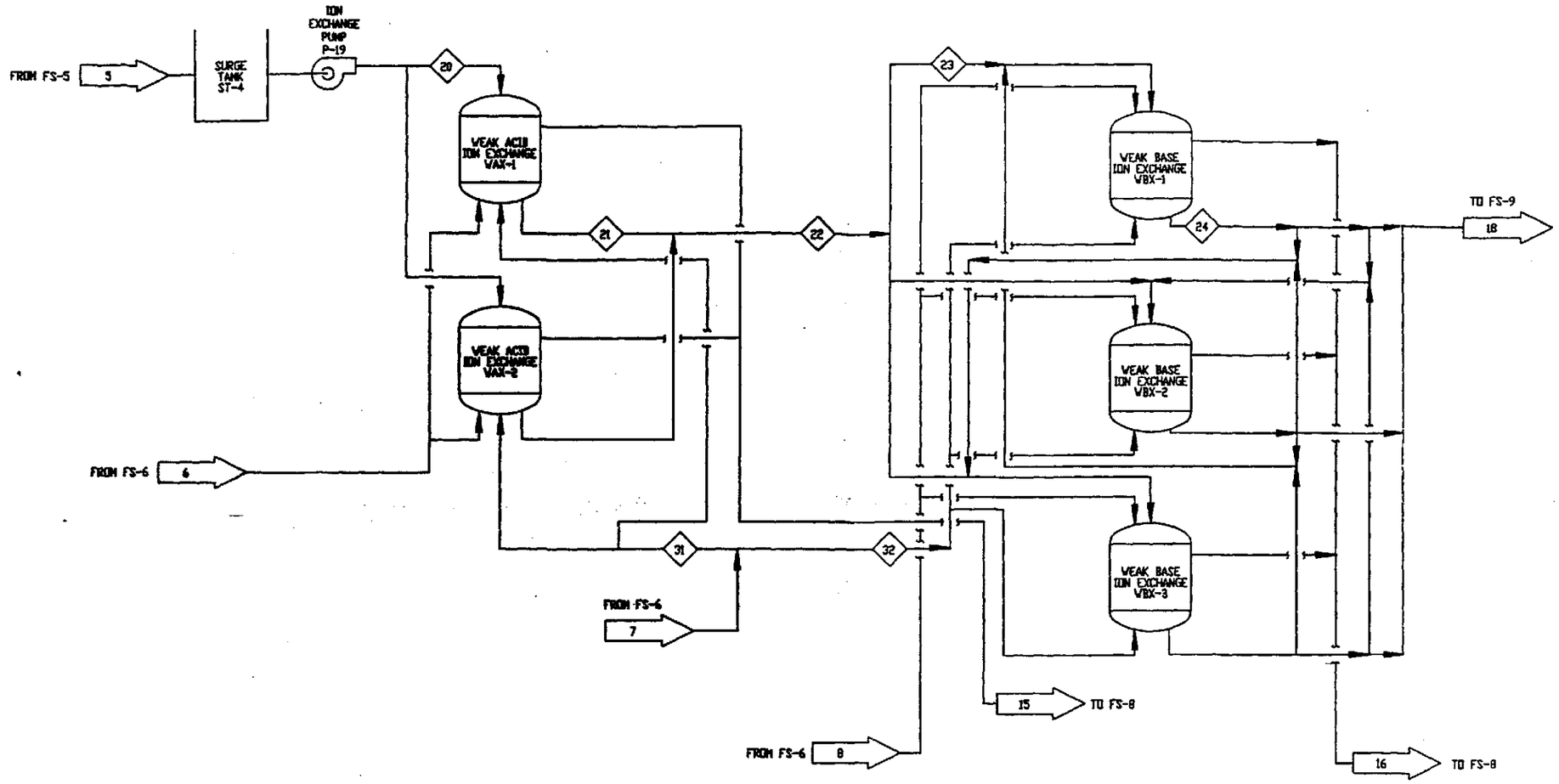

STREAM NUMBER	20	21	22	23	24	31	32
STREAM NAME	ACID EXCHANGE FEED	ACID EXCHANGE DISCHARGE	TO BASE EXCHANGE	BASE EXCHANGE FEED	BASE EXCHANGE DISCHARGE	WEAK ACID REGEN. NaOH	WEAK BASE REGEN. NaOH
WATER (LB/HR)	—	—	—	—	—	—	—
AIR (LB/HR)	—	—	—	—	—	—	—
DRY SOLIDS (LB/HR)	—	—	—	—	—	—	—
BENZENE (ppb)	—	—	—	—	—	—	—
TOLUENE (ppb)	—	—	—	—	—	—	—
OTHER ORGANICS (ppb)	—	—	—	—	—	—	—
ARSENIC (ppb)	—	—	—	—	—	—	—
CADMIUM (ppb)	—	—	—	—	—	—	—
LEAD (ppb)	—	—	—	—	—	—	—
ZINC (ppb)	—	—	—	—	—	—	—
OTHER METALS (ppb)	—	—	—	—	—	—	—
SULFUR DIOXIDE (ppb)	—	—	—	—	—	—	—
SODIUM CHLORIDE (ppb)	—	—	—	—	—	—	—
FLOW RATE (GPM)	—	—	—	—	—	—	—
GAS VOLUME (ACFM)	—	—	—	—	—	—	—
GAS VOLUME (SCFM)	—	—	—	—	—	—	—
PIPE DIAMETER (IN.)	—	—	—	—	—	—	—
PIPE MATERIAL	—	—	—	—	—	—	—

NO.	REVISIONS	DATE	BY	CHK'D

STV/SANDERS & THOMAS
ENGINEERS ARCHITECTS PLANNERS

PROJECT TITLE
INDUSTRI-PLEX SITE
WOBURN, MASSACHUSETTS

SHEET TITLE
GROUND WATER TREATMENT SYSTEM
PROCESS FLOW DIAGRAM
ION EXCHANGE SYSTEM

SCALE	DATE ISSUED	PROJECT NUMBER	SHEET NUMBER
NONE	8/20/90	08-6209	FS-7

DRAWN BY J.D. CHK'D BY APP'D BY

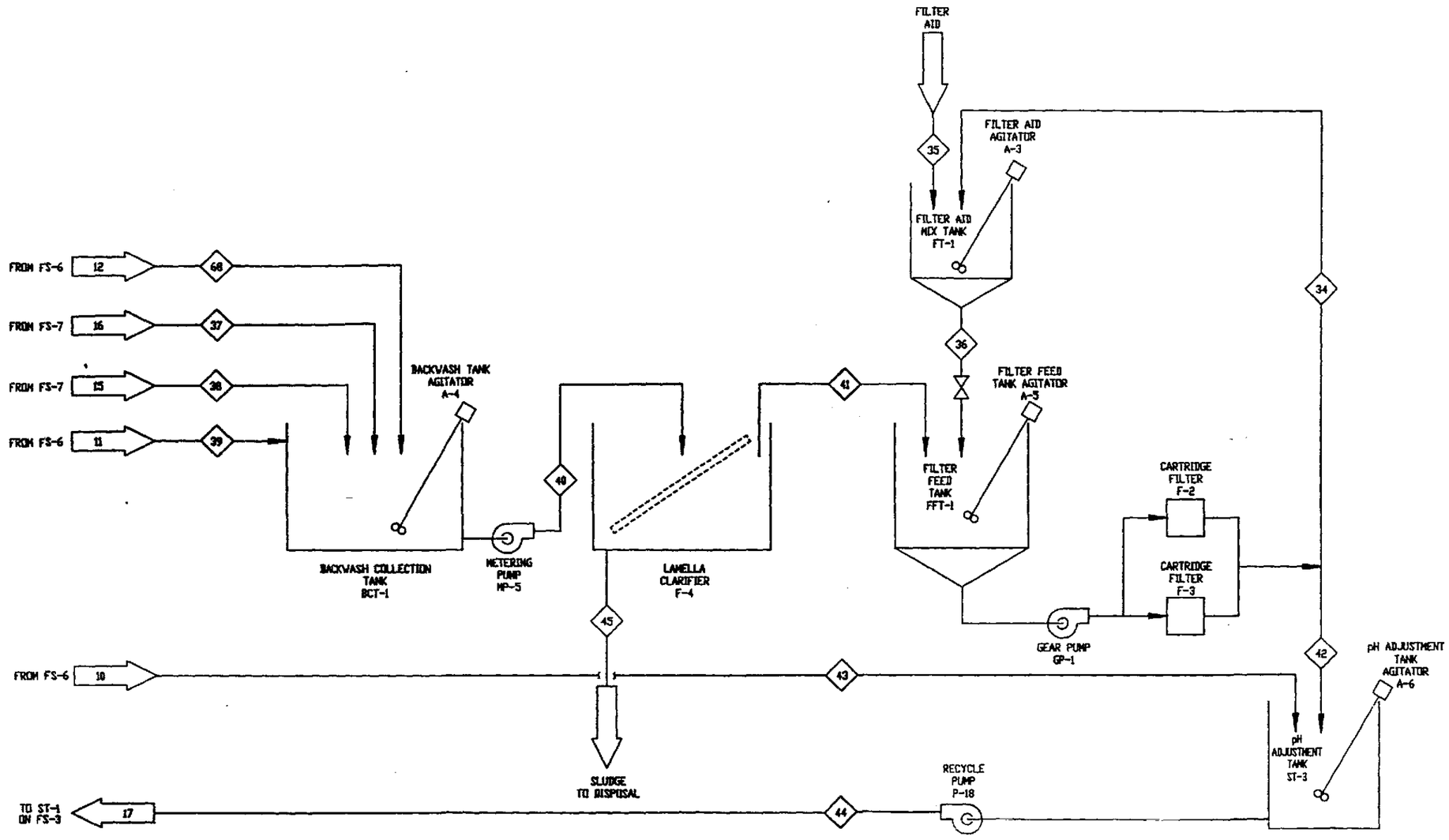

STREAM NUMBER	34	35	36	37	38	39	40	41	42	43	44	45	68
STREAM NAME	WATER FOR FILTER AID PREPARATION	FILTER AID	MIXED FILTER AID	WEAK BASE REGEN. DISCHARGE	WEAK ACID REGEN. DISCHARGE	pH ADJUSTMENT NaOH	PRECIPITATED BACKWASH	COARSE FILTERED BACKWASH	FINAL FILTERED BACKWASH	pH ADJUSTMENT ACID	pH ADJUSTED FILTERED BACKWASH	SLUDGE	STRIPPER BRINE NaOH
WATER (LB/HR)	—	—	—	—	—	—	—	—	—	—	—	—	—
AIR (LB/HR)	—	—	—	—	—	—	—	—	—	—	—	—	—
DRY SOLIDS (LB/HR)	—	—	—	—	—	—	—	—	—	—	—	—	—
BENZENE (ppb)	—	—	—	—	—	—	—	—	—	—	—	—	—
TOLUENE (ppb)	—	—	—	—	—	—	—	—	—	—	—	—	—
OTHER ORGANICS (ppb)	—	—	—	—	—	—	—	—	—	—	—	—	—
ARSENIC (ppb)	—	—	—	—	—	—	—	—	—	—	—	—	—
CADMIUM (ppb)	—	—	—	—	—	—	—	—	—	—	—	—	—
LEAD (ppb)	—	—	—	—	—	—	—	—	—	—	—	—	—
ZINC (ppb)	—	—	—	—	—	—	—	—	—	—	—	—	—
OTHER METALS (ppb)	—	—	—	—	—	—	—	—	—	—	—	—	—
SULFUR DIOXIDE (ppb)	—	—	—	—	—	—	—	—	—	—	—	—	—
SODIUM CHLORIDE (ppb)	—	—	—	—	—	—	—	—	—	—	—	—	—
FLOW RATE (GPM)	—	—	—	—	—	—	—	—	—	—	—	—	—
GAS VOLUME (ACFM)	—	—	—	—	—	—	—	—	—	—	—	—	—
GAS VOLUME (SCFM)	—	—	—	—	—	—	—	—	—	—	—	—	—
PIPE DIAMETER (IN)	—	—	—	—	—	—	—	—	—	—	—	—	—
PIPE MATERIAL	—	—	—	—	—	—	—	—	—	—	—	—	—

NO.	REVISIONS	DATE	BY	CHK'D

STV/SANDERS & THOMAS
ENGINEERS ARCHITECTS PLANNERS

PROJECT TITLE
INDUSTRI-PLEX SITE
WOBURN, MASSACHUSETTS

SHEET TITLE
GROUND WATER TREATMENT SYSTEM
PROCESS FLOW DIAGRAM
BACKWASH TREATMENT SYSTEM

SCALE	DATE ISSUED	PROJECT NUMBER	SHEET NUMBER
NONE	7/10/90	08-6209	FS-8

DRAWN BY J.D. | CHK'D BY | APP'D BY

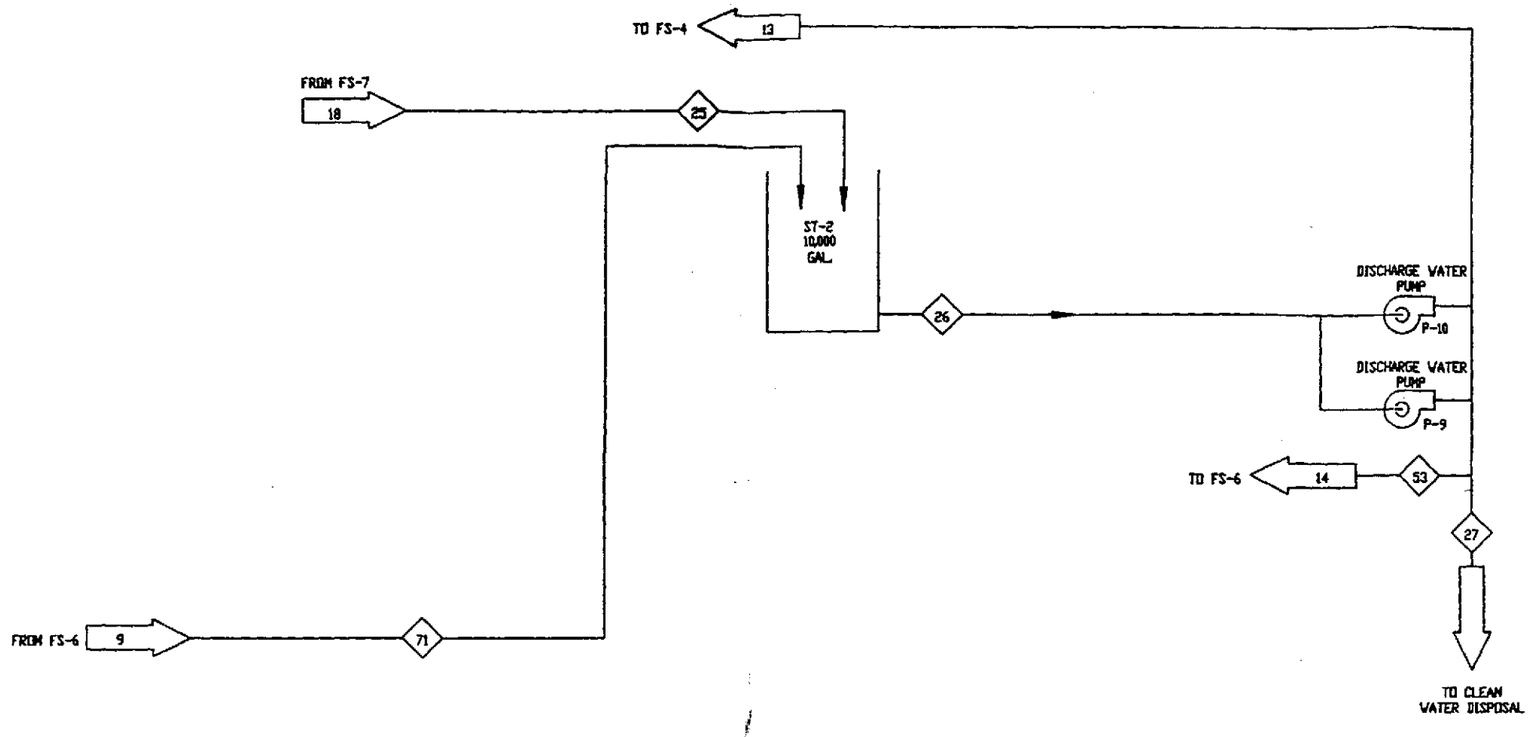

STREAM NUMBER	25	26	27	53	71
STREAM NAME	SURGE TANK FILL	SURGE TANK OUTLET	DISPOSAL STREAM	BRINE SOLUTION WATER	COOL WATER RETURN
WATER (LB/HR)	—	—	—	—	—
AIR (LB/HR)	—	—	—	—	—
DRY SOLIDS (LB/HR)	—	—	—	—	—
BENZENE (ppb)	—	—	—	—	—
TOLUENE (ppb)	—	—	—	—	—
OTHER ORGANICS (ppb)	—	—	—	—	—
ARSENIC (ppb)	—	—	—	—	—
CADMIUM (ppb)	—	—	—	—	—
LEAD (ppb)	—	—	—	—	—
ZINC (ppb)	—	—	—	—	—
OTHER METALS (ppb)	—	—	—	—	—
SULFUR DIOXIDE (ppb)	—	—	—	—	—
SODIUM CHLORIDE (ppb)	—	—	—	—	—
FLOW RATE (GPM)	—	—	—	—	—
GAS VOLUME (ACFM)	—	—	—	—	—
GAS VOLUME (SCFM)	—	—	—	—	—
PIPE DIAMETER (IN.)	—	—	—	—	—
PIPE MATERIAL	—	—	—	—	—
	—	—	—	—	—

NO.	REVISION	DATE	BY	CHK'D

STV/SANDERS & THOMAS
ENGINEERS ARCHITECTS PLANNERS

PROJECT TITLE
INDUSTRI-PLEX SITE
WOBURN, MASSACHUSETTS

SHEET TITLE
GROUND WATER TREATMENT SYSTEM
PROCESS FLOW DIAGRAM
CLEAN WATER DISPOSAL SYSTEM

SCALE	DATE ISSUED	PROJECT NUMBER	SHEET NUMBER
NONE	7/2/90	08-6209	FS-9

DRAWN BY J.D. CHK'D BY APP'D BY

P&ID'S

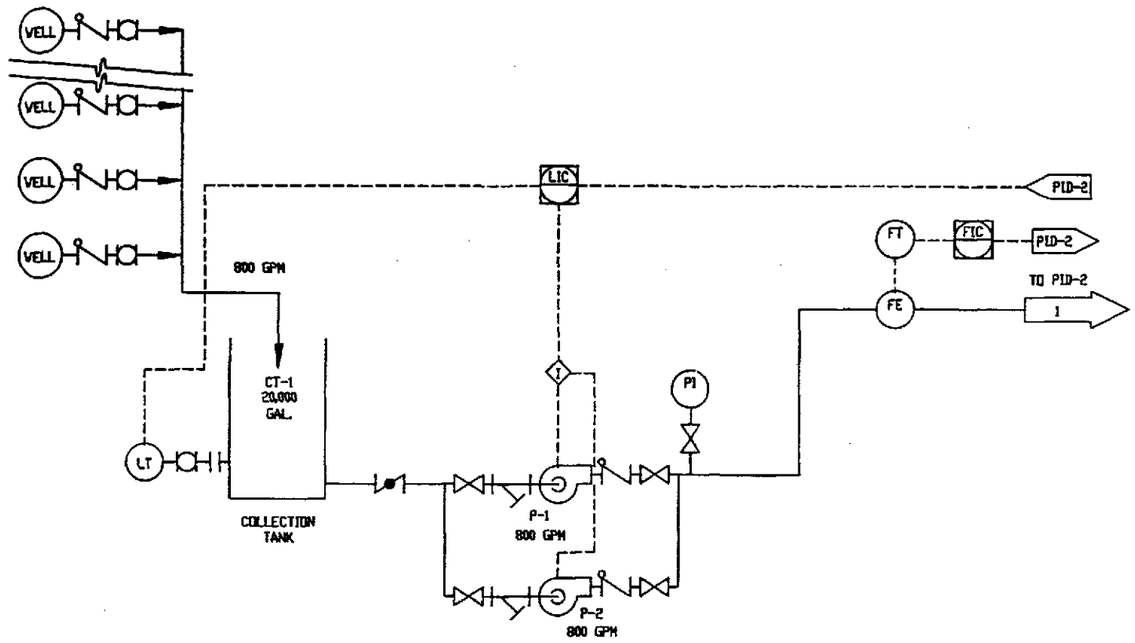

NO.	REVISIONS	DATE	BY	CHK'D

STV/SANDERS & THOMAS
ENGINEERS ARCHITECTS PLANNERS

PROJECT TITLE
INDUSTRI-PLEX SITE
WOBURN, MASSACHUSETTS

SHEET TITLE
GROUND WATER TREATMENT SYSTEM
PIPING & INSTRUMENT DIAGRAM

SCALE	DATE ISSUED	PROJECT NUMBER	SHEET NUMBER
NONE	7/13/90	08-6209	PID-1

DRAWN BY JJL | CHK'D BY | APP'D BY

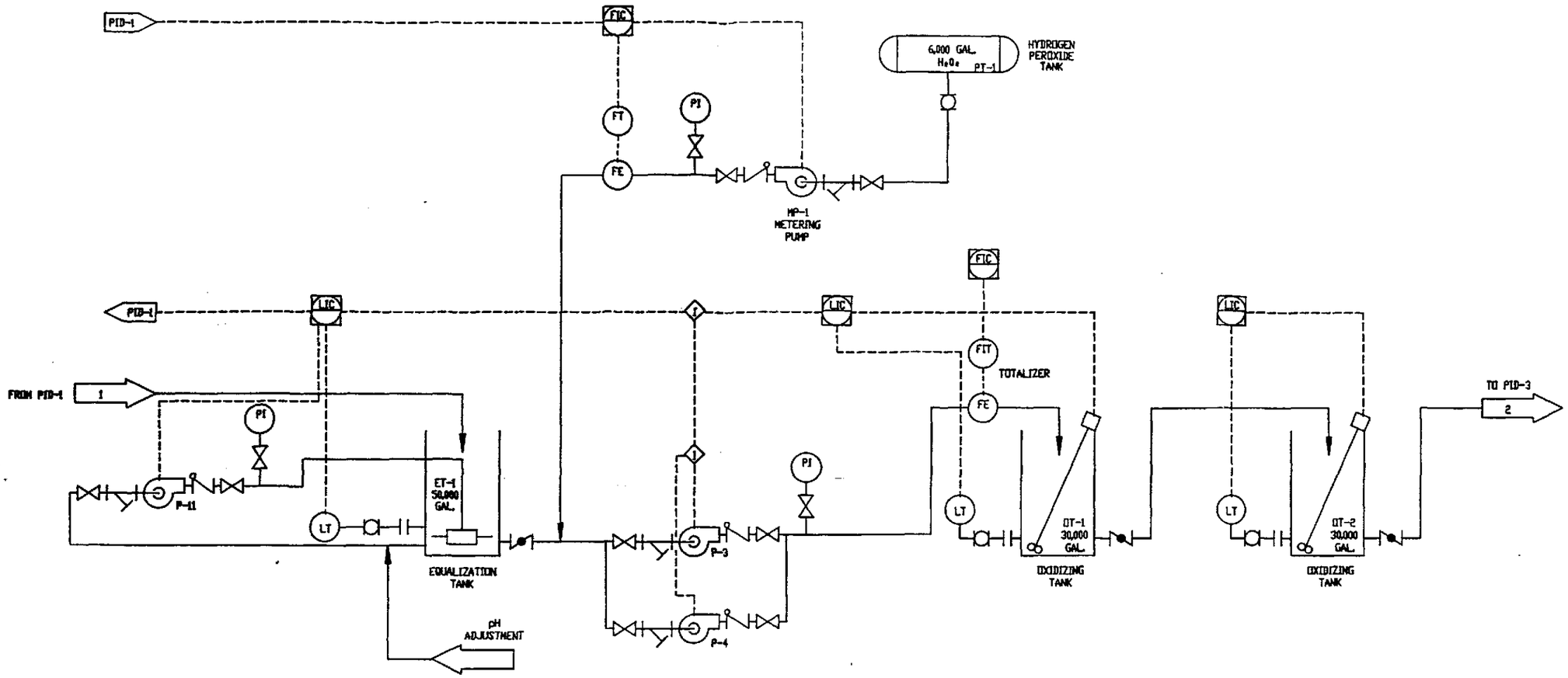

NO.	REVISIONS	DATE	BY	CHK'D

STV/ SANDERS & THOMAS
ENGINEERS ARCHITECTS PLANNERS

PROJECT TITLE
INDUSTRI-PLEX SITE
WOBURN, MASSACHUSETTS

SHEET TITLE
GROUND WATER TREATMENT SYSTEM
PIPING & INSTRUMENT DIAGRAM
OXIDATION SYSTEM

SCALE	DATE ISSUED	PROJECT NUMBER	SHEET NUMBER
NONE	8/20/90	08-6209	PID-2

DRAWN BY D.A.M. CHK'D BY APP'D BY

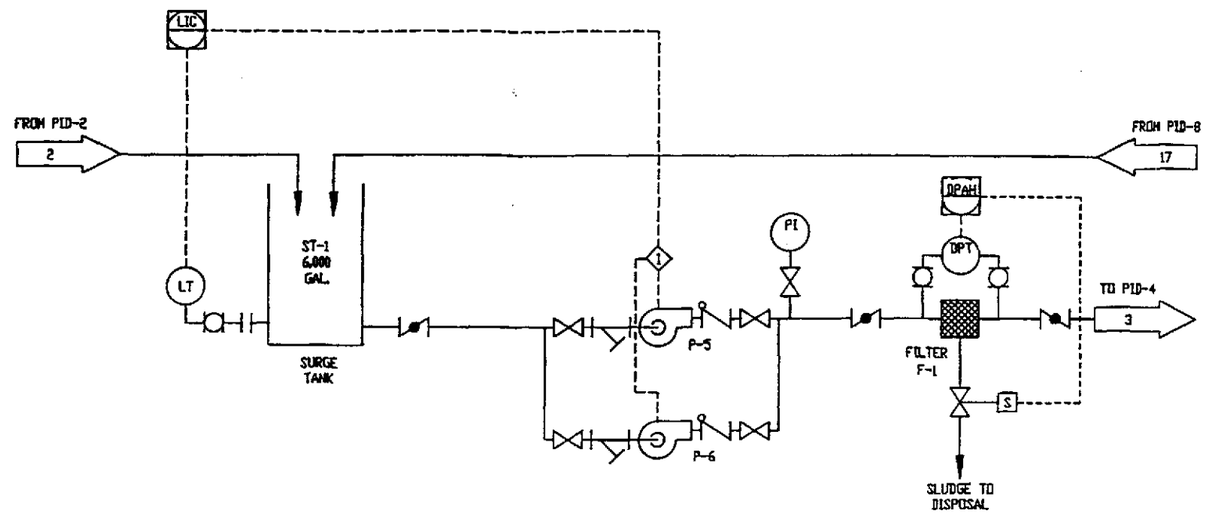

NO.	REVISIONS	DATE	BY	CHK'D

STV/ SANDERS & THOMAS
ENGINEERS ARCHITECTS PLANNERS

PROJECT TITLE
INDUSTRI-PLEX SITE
WOBURN, MASSACHUSETTS

SHEET TITLE
GROUND WATER TREATMENT SYSTEM
PIPING & INSTRUMENT DIAGRAM
FILTRATION SYSTEM

SCALE	DATE ISSUED	PROJECT NUMBER	SHEET NUMBER
NONE	7/13/93	08-6209	PID-3

DRAWN BY J.D. | CHK'D BY | APP'D BY

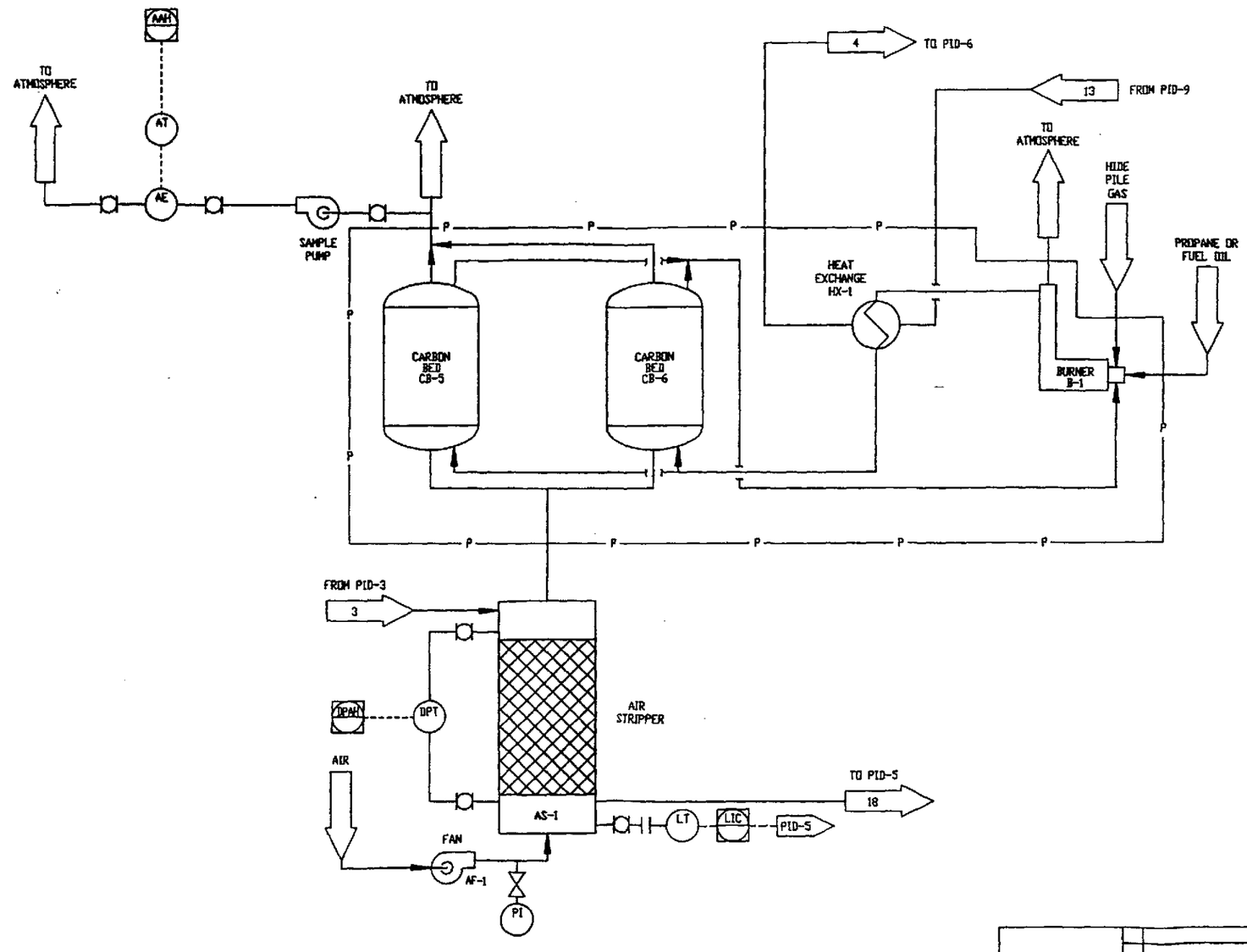

STV/SANDERS & THOMAS
ENGINEERS ARCHITECTS PLANNERS

PROJECT TITLE
INDUSTRI-PLEX SITE
WOBURN, MASSACHUSETTS

SHEET TITLE
GROUND WATER TREATMENT SYSTEM
PIPING & INSTRUMENT DIAGRAM
AIR STRIPPING SYSTEM

SCALE	DATE ISSUED	PROJECT NUMBER	SHEET NUMBER
NONE	7/13/93	08-6209	PID-4

DRAWN BY D.A.M. | CHK'D BY | APP'D BY

NO.	REVISIONS	DATE	BY	CHK'D

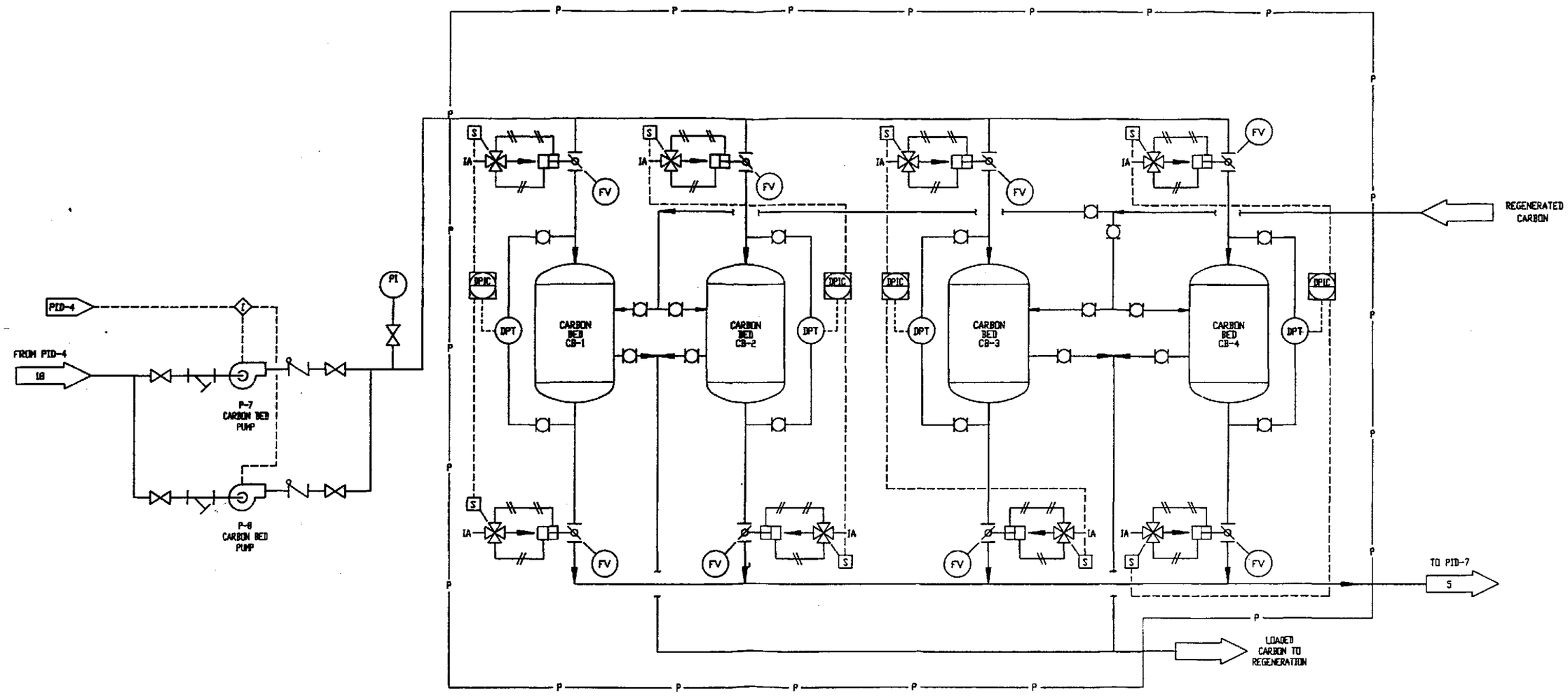

NO.	REVISIONS	DATE	BY	CHK'D

STV/ SANDERS & THOMAS
ENGINEERS ARCHITECTS PLANNERS

PROJECT TITLE
INDUSTRI-PLEX SITE
WOBURN, MASSACHUSETTS

SHEET TITLE
GROUND WATER TREATMENT SYSTEM
PIPING & INSTRUMENT DIAGRAM
CARBON ADSORPTION SYSTEM

SCALE	DATE ISSUED	PROJECT NUMBER	SHEET NUMBER
NONE	7/13/93	08-6209	PID-5

DRAWN BY D.A.M. CHK'D BY APP'D BY

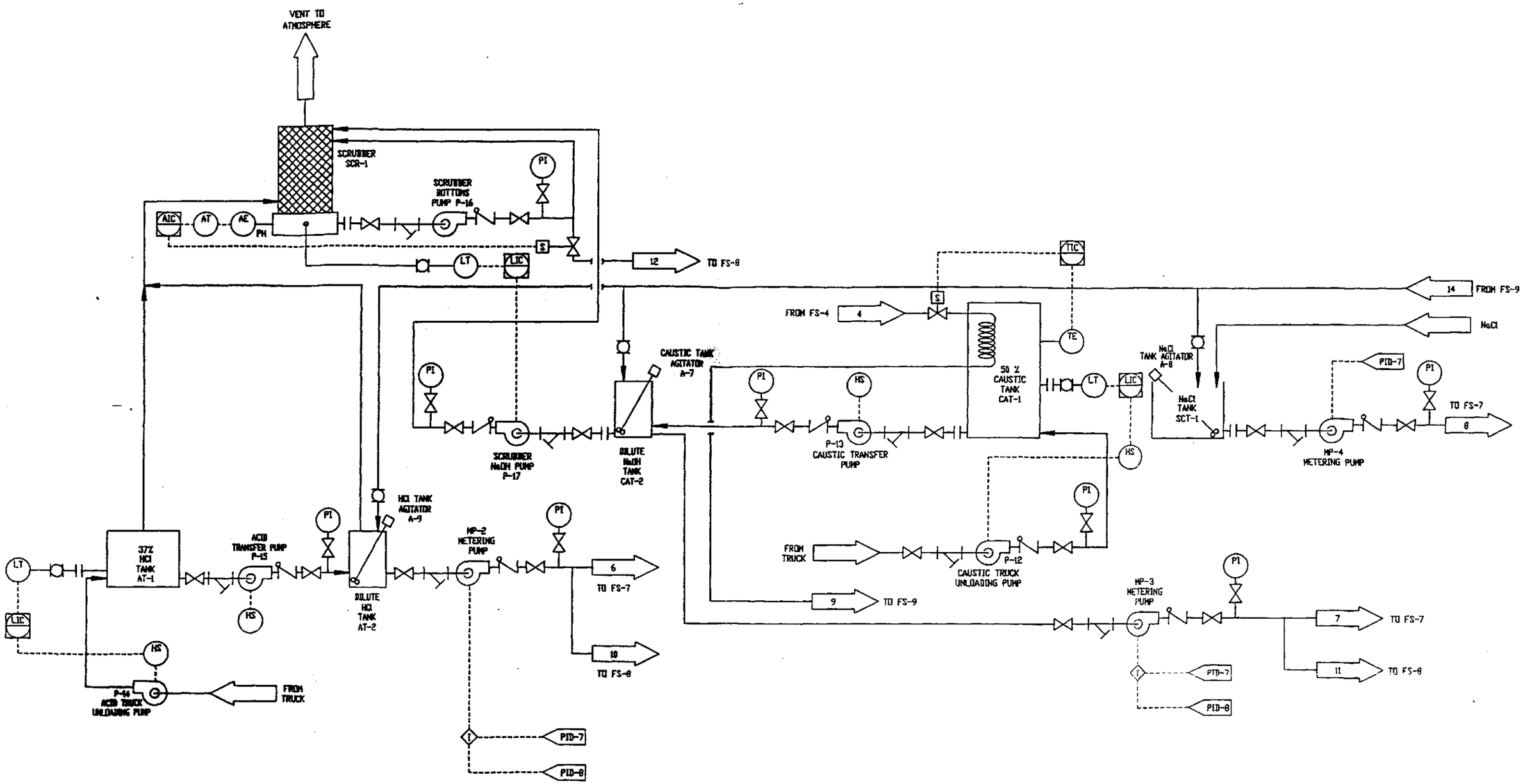

STV/ SANDERS & THOMAS
ENGINEERS ARCHITECTS PLANNERS

PROJECT TITLE
INDUSTRI-PLEX SITE
WOBURN, MASSACHUSETTS

SHEET TITLE
GROUND WATER TREATMENT SYSTEM
PIPING & INSTRUMENT DIAGRAM

NO.	REVISIONS	DATE	BY	CHK'D

SCALE	DATE ISSUED	PROJECT NUMBER	SHEET NUMBER
NONE	7/13/90	08-6209	PID-6

DRAWN BY J.D. CHK'D BY APP'D BY

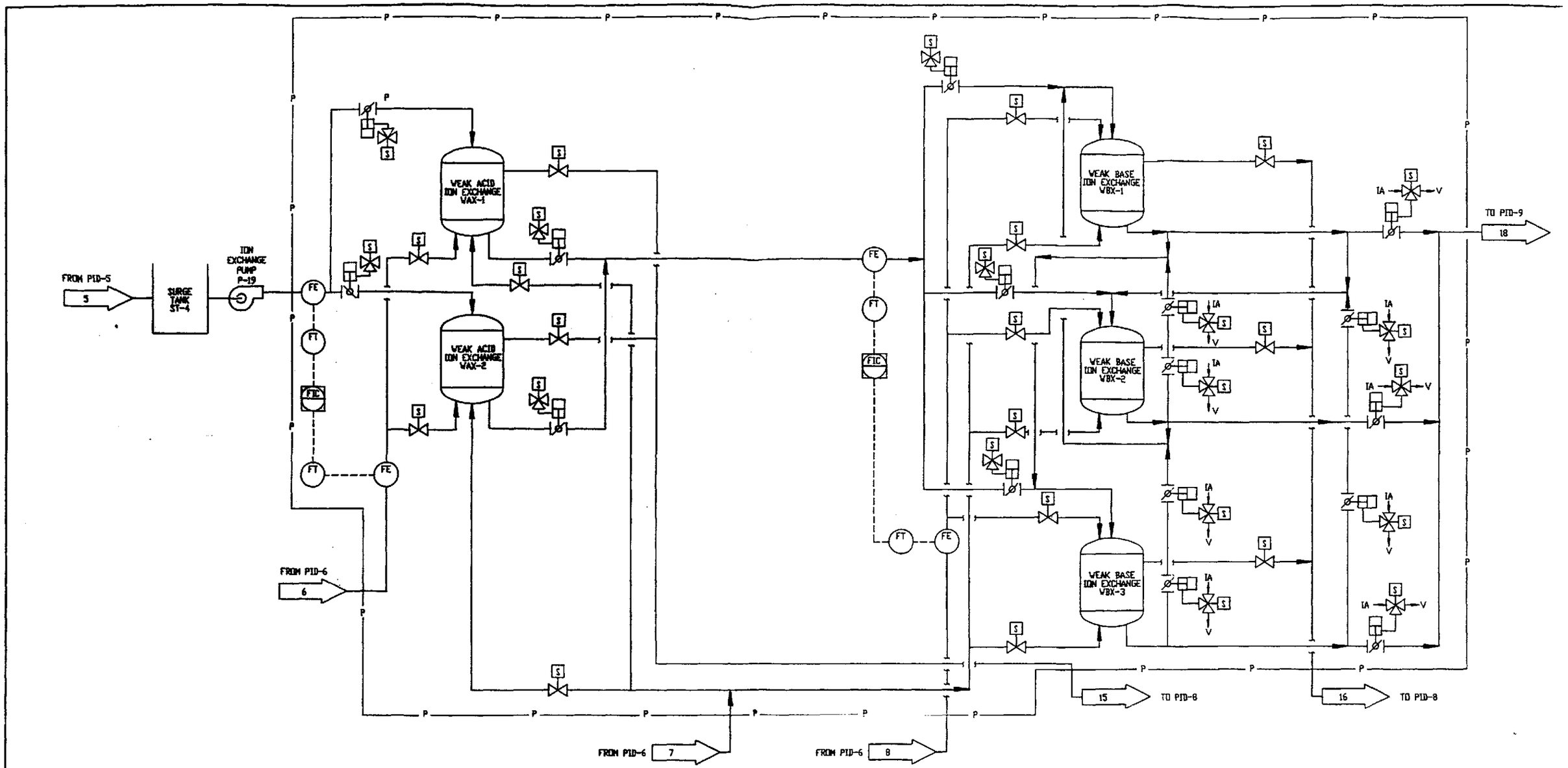

NO.	REVISIONS	DATE	BY	CHK'D

STV/SANDERS & THOMAS
ENGINEERS ARCHITECTS PLANNERS

PROJECT TITLE
INDUSTRI-PLEX SITE
WOBURN, MASSACHUSETTS

SHEET TITLE
GROUND WATER TREATMENT SYSTEM
PIPING & INSTRUMENT DIAGRAM
ION EXCHANGE SYSTEM

SCALE	DATE ISSUED	PROJECT NUMBER	SHEET NUMBER
NONE	8/20/90	08-6209	PID-7

DRAWN BY D.A.M. | CHK'D BY | APP'D BY

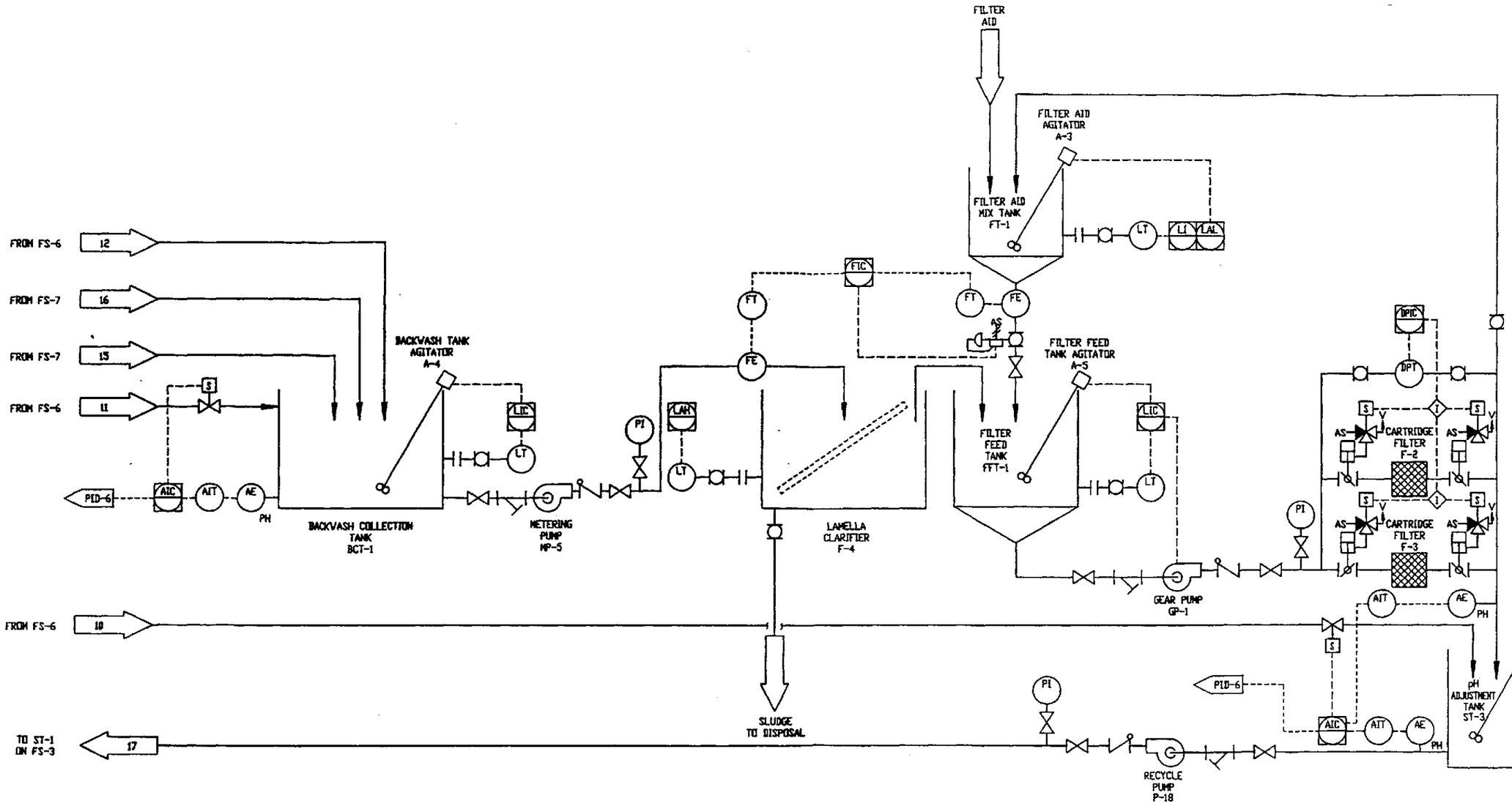

STV/SANDERS & THOMAS
ENGINEERS ARCHITECTS PLANNERS

PROJECT TITLE
INDUSTRI-PLEX SITE
WOBURN, MASSACHUSETTS

SHEET TITLE
GROUND WATER TREATMENT SYSTEM
PIPING & INSTRUMENT DIAGRAM
BACKWASH TREATMENT SYSTEM

SCALE	DATE ISSUED	PROJECT NUMBER	SHEET NUMBER
NONE	7/13/93	08-6209	PID-8

DRAWN BY D.A.H. | CHK'D BY | APP'D BY

NO.	REVISIONS	DATE	BY	CHK'D

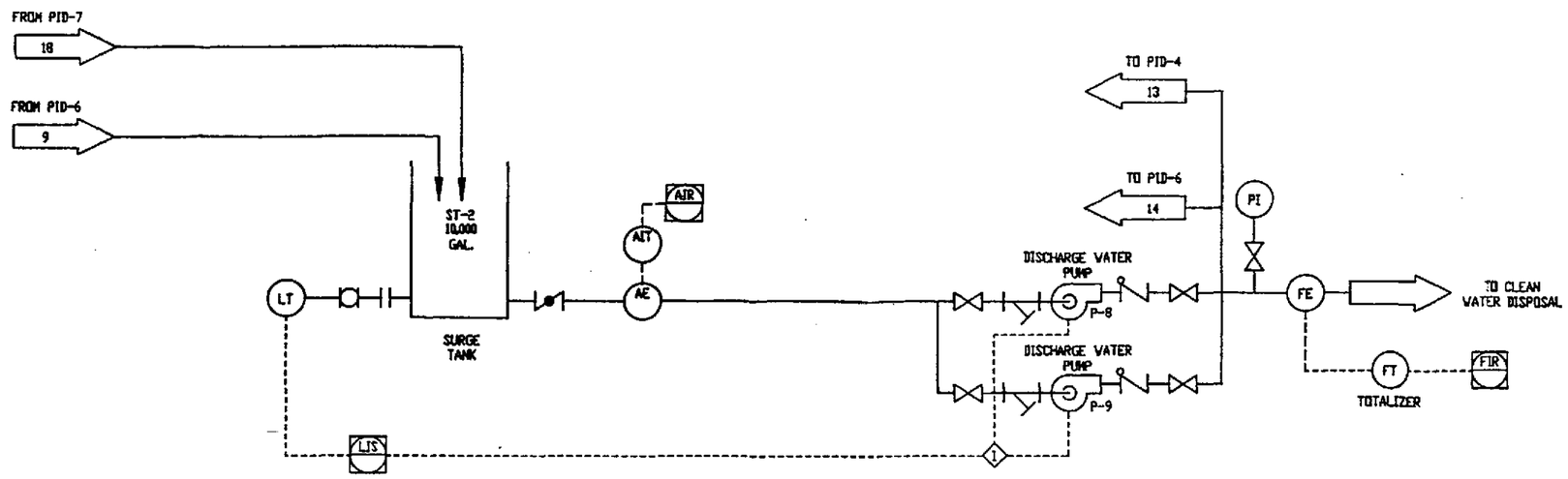

STV/ SANDERS & THOMAS
ENGINEERS ARCHITECTS PLANNERS

PROJECT TITLE
INDUSTRI-PLEX SITE
WOBURN, MASSACHUSETTS

SHEET TITLE
GROUND WATER TREATMENT SYSTEM
PIPING & INSTRUMENT DIAGRAM
CLEAN WATER DISPOSAL SYSTEM

SCALE	DATE ISSUED	PROJECT NUMBER	SHEET NUMBER
NONE	7/13/93	08-6209	PID-9

DRAWN BY D.A.M. | CHK'D BY | APP'D BY

NO.	REVISIONS	DATE	BY	CHK'D