ARCADIS
Infrastructure · Water · Environment · Buildings

Imagine the result

DRAFT

FOR EPA REVIEW

General Electric Company
Albany, New York

Final (100%) Design Report for the OSD Remedy

Volume III of III – Appendices

Fletcher's Paint Works and Storage Facility
Superfund Site - Operable Unit 1
Milford, New Hampshire

November 21, 2012

SDMS Doc ID 529091

Volume III of III

Appendices

D OSD Staging Scenario

E Truck Route and Traffic Analysis Report

F Design Calculations

G Project Construction Schedule

H Construction Quality Assurance Plan

I Contingency Plan

Appendix D

OSD Staging Scenario

Appendix D
OSD Staging Scenario

General Electric Company
Fletcher's Paint Works and Storage Facility Superfund Site
Milford, New Hampshire

Preliminary Summary of Anticipated Work Activities – OSD Remedy

The following summary is intended to only provide a potential conceptual approach for sequencing the implementation of the off-site disposal (OSD) soil remedy. The selected remedial contractor (the Remedial Action Contractor) will ultimately be responsible for proposing its own approach, which will be subject to review and approval by the Design Engineer (on behalf of the General Electric Company [GE]) prior to mobilization to the Site.

As further discussed in Section 4.7 of the *Final (100%) Design Report for the OSD Remedy* (Final Design Report), more than one scenario for the performance and sequencing of the OSD soil remedy was evaluated. Under the selected scenario, which was referred to as Scenario 2 in the *Intermediate (60%) Design Report for the OSD Remedy* (Intermediate OSD Design Report), the Remedial Action at the Elm and Mill Street Areas will be performed in two phases (Phases 1 and 2), with the excavation and backfilling activities at the Elm and Mill Street Areas performed concurrently, subject to certain constraints (e.g., no simultaneous closure of the west-bound lane of Elm Street and the eastern end of Mill Street). Under such a scenario, it is anticipated that the Remedial Action Contractor would have two field crews performing the Remedial Action activities at the Elm and Mill Street Areas. Additional information regarding this sequencing approach is summarized below, and is organized in the following five sections:

1. Site Preparation Activities;

2. Phase 1 Remediation Activities;

3. Phase 2 Remediation Activities;

4. Site Restoration Activities; and

5. Key Assumptions.

Furthermore, the following tables and figures were prepared in support of this OSD staging scenario:

Tables

D-1 – Estimated Total Volume of Material Subject to Remedial Action at the Elm Street Area

D-2 – Additional Soil Removal Required for Replacement Storm Sewer, Cover System, Storm Water Retention Area, and Gabion Wall at the Elm Street Area

D-3 – Estimated Total Volume of Material Subject to Remedial Action at the Mill Street Area

Appendix D
OSD Staging Scenario

General Electric Company
Fletcher's Paint Works and Storage Facility Superfund Site
Milford, New Hampshire

Preliminary Summary of Anticipated Work Activities – OSD Remedy

Figures

D-1 – Keyes Park – Staging Plan – OSD Remedy – Sequencing of Remedial Action

D-2 – Phase 1 Soil Removal Areas – Elm Street Area – OSD Remedy – Sequencing of Remedial Action

D-3 – Phase 1 Soil Removal Areas – Mill Street Area – OSD Remedy – Sequencing of Remedial Action

D-4 – Phase 2 Soil Removal Areas – Elm Street Area – OSD Remedy – Sequencing of Remedial Action

D-5 – Phase 2 Soil Removal Areas – Mill Street Area – OSD Remedy – Sequencing of Remedial Action

1. <u>Site Preparation Activities</u>

- Mobilize and perform general site preparation activities at the Elm and Mill Street Areas (field office trailer setup [see Figure D-1], clearing and grubbing of working areas, establishing perimeter fencing, etc.);

- Identify and temporarily relocate utilities, install portion of replacement storm sewer at Elm Street Area between catch basin CB-1 on Cottage Street and temporary manhole at the Elm Street Area;

- Construct clean backfill, equipment, and materials staging areas;

- Construct temporary equipment and personnel decontamination areas;

- Construct alternate access to Mill Street residences, if necessary to install excavation support systems (otherwise, this task will be performed prior to full-scale excavation at the Mill Street Area);

- Establish and maintain environmental monitoring stations (e.g., air, geotechnical, etc.), as necessary; and,

Appendix D
OSD Staging Scenario

General Electric Company
Fletcher's Paint Works and Storage Facility Superfund Site
Milford, New Hampshire

Preliminary Summary of Anticipated Work Activities – OSD Remedy

- Implement the applicable portions of the traffic control activities specified in Section 3.14 of the Final Design Report, the T-series of Technical Drawings (Appendix B) and the *Truck Route and Traffic Analysis Report* (TR/TA Report, Appendix E).

2. Phase 1 Remediation Activities

- Excavate approximately 135 cubic yards (cy) of material from portions of excavation cells located within Elm Street. Excavated materials may be sent off-site directly, or staged for subsequent off-site disposal with remaining Elm Street Area soils subject to excavation;

- Verify limits of soil removal for excavations beneath Elm Street via survey and backfill excavations with gravel material to restore normal traffic patterns;

- Install excavation support systems for subsurface soil removal areas at both the Elm and Mill Street Areas. Excavation spoils and estimated 2,000 cy of slurry associated with SPTC wall construction may be sent off-site directly, or staged for subsequent off-site disposal with remaining soils subject to excavation;

- Construct temporary water treatment system at the Mill Street Area and conduct performance testing;

- Segregate and stockpile all but the bottom few inches of the sand cap installed by the United States Environmental Protection Agency (EPA) in January 2001 over the former building slab at the Elm Street Area;

- Perform confirmation sampling of stockpiled sand cap materials for potential re-use as backfill;

- Initiate dewatering activities and full-scale operation of the water treatment facility at the Mill Street Area;

- Excavate approximately 16,150 cy of material from the Elm Street Area Phase 1 excavations shown on Figure D-2 (this includes approximately 15,325 cy to achieve the soil cleanup levels [SCLs] and approximately 825 cy of additional excavation associated with construction of the engineered cover system, replacement storm sewer, gabion wall installation and excavation sloping [see Tables D-1 and D-2]). These volumes exclude the approximately 135 cy of material previously removed from excavations beneath Elm Street;

Appendix D
OSD Staging Scenario

General Electric Company
Fletcher's Paint Works and Storage Facility Superfund Site
Milford, New Hampshire

Preliminary Summary of Anticipated Work Activities – OSD Remedy

- Segregate and stockpile approximately 825 cy of excavated material associated with installation of the engineered cover system, replacement storm sewer, gabion wall installation and excavation sloping (which is not subject to off-site disposal), for future use as backfill material (see Tables D-1 and D-2);

- Concurrently with the Phase 1 remediation activities at the Elm Street Area, excavate approximately 8,600 cy of materials from the Phase 1 excavations at the Mill Street Area illustrated on Figure D-3 (this includes approximately 7,900 cy to achieve the SCLs and approximately 700 cy of additional excavation associated with excavation sloping [see Table D-3]);

- Segregate and stockpile approximately 700 cy of excavated material associated with excavation sloping (which is not subject to off-site disposal), for future use as backfill material at the Mill Street Area (see Table D-3);

- Dewater and stabilize saturated materials (if any) excavated in vicinity of seasonal low water table at the Elm Street Area, and excavated below the water table at the Mill Street Area prior to transportation of those materials for off-site disposal at appropriately permitted facilities;

- Perform verification sampling activities for excavation bottoms and sidewalls at the Elm Street Area and excavation bottoms at the Mill Street Area in accordance with the *Verification Sampling Plan* (VSP, Appendix A);

- Place and compact soil from the former sand cap installed by EPA at the Elm Street Area (approximately 1,000 cy) either behind the gabion wall or in excavation areas located within the horizontal limits of the future engineered cover system at the Elm Street Area (this assumes that the required verification sampling indicates that this material meets the applicable SCLs);

- Place and compact stockpiled Phase 1 soils excavated from the Elm Street Area that are not subject to off-site disposal (approximately 825 cy) as subsurface backfill in excavation areas located within the horizontal limits of the future engineered cover system at the Elm Street Area;

- Place and compact stockpiled Phase 1 soils excavated from the Mill Street Area that are not subject to off-site disposal (approximately 700 cy) as subsurface backfill in excavation areas at the Mill Street Area;

Appendix D
OSD Staging Scenario

General Electric Company
Fletcher's Paint Works and Storage Facility Superfund Site
Milford, New Hampshire

Preliminary Summary of Anticipated Work Activities – OSD Remedy

- Import, place, and compact clean backfill materials in the Phase 1 excavations at the Elm and Mill Street Areas to the specified excavation sub-grades, for subsequent surface restoration; and

- Relocate clean backfill, equipment, and materials staging areas, and temporary equipment and personnel decontamination area(s), at the Elm and Mill Street Areas as necessary to accommodate performance of the Phase 2 remediation activities.

3. <u>Phase 2 Remediation Activities</u>

- Excavate approximately 8,115 cy of material from the Elm Street Area Phase 2 excavations illustrated on Figure D-4 (this includes approximately 5,790 cy to achieve the SCLs and approximately 2,325 cy of additional excavation associated with construction of the engineered cover system, replacement storm sewer, storm water retention area, gabion wall installation, and excavation sloping [see Tables D-1 and D-2]);

- Segregate and stockpile approximately 2,325 cy of excavated material associated with installation of the engineered cover system, replacement storm sewer, storm water retention area, gabion wall installation and excavation sloping (which is not subject to off-site disposal), for future use as backfill material (see Tables D-1 and D-2);

- Concurrently with the Phase 2 remedial activities at the Elm Street Area, excavate approximately 1,305 cy of materials from the Phase 2 excavations at the Mill Street Area illustrated on Figure D-5 (this includes approximately 1,055 cy to achieve the SCLs and approximately 250 cy of additional excavation associated with excavation sloping [see Table D-3]);

- Segregate and stockpile approximately 250 cy of excavated material associated with excavation sloping (which is not subject to off-site disposal), for future use as backfill material (see Table D-2);

- Perform verification sampling activities for excavation bottoms in accordance with the VSP (Appendix A).

- Place and compact stockpiled Phase 2 soils excavated from the Elm Street Area that are not subject to off-site disposal (approximately 2,325 cy) as subsurface backfill in excavation areas located within the horizontal limits of the future engineered cover system at the Elm Street Area;

Appendix D
OSD Staging Scenario

General Electric Company
Fletcher's Paint Works and Storage Facility Superfund Site
Milford, New Hampshire

Preliminary Summary of Anticipated Work Activities – OSD Remedy

- Place and compact stockpiled Phase 2 soils excavated from the Mill Street Area that are not subject to off-site disposal (approximately 250 cy) as subsurface backfill in excavation areas at the Mill Street Area; and

- Import, place, and compact clean backfill materials in the Phase 2 excavations at the Elm and Mill Street Areas to the specified excavation sub-grades for subsequent surface restoration.

4. Site Restoration Activities

- Perform equipment decontamination and demobilization of the temporary water treatment system and other miscellaneous heavy construction equipment;

- Remove and dispose of temporary equipment/materials staging areas and equipment decontamination areas (these materials may be used as structural backfill materials, subject to the verification sampling and testing specified in the VSP);

- Construct engineered cover system, replacement storm sewer, storm water retention area, install gabion wall and riprap, and perform miscellaneous site restoration (e.g., vegetative restoration for non-cover system/riprap areas at Elm and Mill Street Areas, realign Mill Street, repave Elm Street, Keyes Drive and new parking area at the Elm Street Area, remove temporary/alternate residential access roads and alternate access/parking area in Keyes Park, restore residential properties and Keyes Park [as necessary], restore support zone, and restore/relocate above-grade utilities etc.); and,

- Demobilize from the Site and perform remaining inspection, site restoration, and housekeeping activities.

5. Key Assumptions

- The Mill Street Area has insufficient space to accommodate staging of equipment, materials, and facilities, with the exception of the temporary water treatment system and the equipment used during implementation of the Remedial Action (e.g., installation of excavation supports, material excavation and site restoration activities, etc.) at the Mill Street Area.

- The temporary water treatment system will be located at the Mill Street Area because: 1) space limitations at the Elm Street Area prevent staging there; 2) the majority of soils excavated from the Elm Street Area will not require dewatering; 3) the majority of the liquids generated during the project will be associated with dewatering the excavations at the Mill Street Area, and 4) discharge to the Souhegan River via the on-site drainage ditch/culvert

system is available at the Mill Street Area. Liquids generated during remediation activities at the Elm Street Area will be stored in tanks, and transported to the Mill Street Area for treatment and discharge, as necessary. Alternately, water could be pumped from the Elm Street Area to the temporary water treatment system at the Mill Street Area via piping run through the restored storm sewer and along the on-site drainage ditch/culvert system. (The portion of the storm sewer between Cottage Street and the Elm Street Area would be restored during the site preparation phase of the Remedial Action, as discussed in Section 1 above.)

- The estimated volume of Toxic Substances Control Act (TSCA) and non-TSCA excavated materials is based upon the pre-design investigation and supplemental investigation data summarized in the revised Final Design Report. As indicated therein, the estimated volume of excavated materials subject to TSCA disposal regulations is approximately 26,985 cy, which includes approximately 20,070 cy from the Elm Street Area and approximately 6,915 cy from the Mill Street Area. The estimated volume of non-TSCA excavated materials is approximately 3,190 cy, which includes approximately 1,160 cy from the Elm Street Area and approximately 2,030 cy from the Mill Street Area. In addition, certain of these soils may contain non-PCB constituents, at concentrations that require handling and disposal under Resource Conservation and Recovery Act (RCRA) disposal regulations.

- All operations and materials of construction will be located within the limits of the Elm Street Area and/or the Mill Street Area, with the exception that the following facilities may be staged in Keyes Park (see Figure D-1):

  - Clean equipment/backfill staging areas;

  - Site office/support trailers;

  - Portable sanitary services; and

  - Personal vehicles for contractors and authorized visitors.

- No equipment, materials, or facilities can be staged within the 100-year floodplain (with the exception of field office trailers).

- Excavation activities at the Elm and Mill Street Areas will be performed concurrently;

Appendix D
OSD Staging Scenario

General Electric Company
Fletcher's Paint Works and Storage Facility Superfund Site
Milford, New Hampshire

Preliminary Summary of Anticipated Work Activities – OSD Remedy

- With the exception of the sand cap at the Elm Street Area (discussed below) and the additional soil excavated to facilitate construction of the engineered cover system, replacement storm sewer, storm water retention area, and gabion wall at the Elm Street Area (approximately 1,310 cy, as indicated on Table D-2), as well as additional generated as part of excavation sloping at both the Elm and Mill Street Areas to safely implement the Remedial Action (approximately 1,840 cy at the Elm Street Area and 950 cy at the Mill Street Area, as indicated on Tables D-1 and D-3), no other site materials will be segregated for re-use as backfill material. All other excavated materials will be transported off-site for disposal.

- Multiple relocations of clean backfill and equipment/materials staging areas, the temporary equipment and personnel staging area(s), and the personnel and equipment cleaning areas (i.e., contaminant reduction zones) will be necessary to accommodate the performance of the remediation activities within the limited space available and to also limit the use of Keyes Park for construction support.

- Approximately 1,000 cy of excavated soils, obtained from the sand cap installed by EPA in January 2001, can be reused as backfill in excavation areas. This assumption is based on data obtained from the *Asbestos Removal and Building Demolition Source Control Remedial Action – Final Completion Report* (U.S. Army Corps of Engineers [USACE], May 2002); however, these soils will be subject to the verification sampling proposed in the VSP (Appendix A).

- The excavation volume for the Mill Street Area is based upon the assumption that the southern rail line will be relocated prior to the excavation activities specified in the Remedial Design. The remediation activities include the performance of a focused excavation along the southern rail line. As indicated in the Final Design Report, the remediation activities proposed in the Final Design Report are subject to review and comment by Guilford Transportation Industries, Inc. (the owner of the railroad). If those discussions result in modifications to the limits of soil removal for the Mill Street Area, this scenario will be revised as appropriate in future Remedial Design/Remedial Action submittals.

TABLE D-1
ESTIMATED TOTAL VOLUME OF MATERIAL SUBJECT TO REMEDIAL ACTION AT THE ELM STREET AREA

OSD STAGING SCENARIO
FINAL (100%) DESIGN REPORT
FLETCHER'S PAINT WORKS AND STORAGE FACILITY SUPERFUND SITE
GENERAL ELECTRIC COMPANY - MILFORD, NEW HAMPSHIRE

Area	Excavation Cell Identifier	Excavation Depth Below Ground Surface (feet)	Elevation of Excavation Bottom (feet)	Approximate Surface Area (square feet)	Approximate In-Situ Volume (cubic feet)	Approximate In-Situ Volume (cubic yards)
Elm Street Area - Phase 1	A1	1	--	2,128.25	2,130	80
	D	--	238	1,247.28	13,100	490
	F	--	238	918.96	7,730	290
	H	--	241	2,548.23	28,880	1,070
	I (portion)	1	--	1,355.00	1,360	50
	J	--	236	4,708.03	56,270	2,080
	K	--	240	2,225.14	32,260	1,190
	L	--	249	2,492.54	12,410	460
	O (portion)	--	262	270.00	950	40
	S	--	239	1,018.08	19,340	720
	T	--	244	665.10	9,640	360
	U	--	253	380.80	1,140	40
	V	--	247	3,001.02	32,510	1,200
	W	--	234.5	6,571.17	117,800	4,360
	X1	--	250	2,509.51	26,980	1,000
	X2	--	250	170.54	1,830	70
	AA (portion)	1	--	66.00	70	5
	FF (portion)	1	--	1,074.00	1,070	40
	II	13.5	--	180.64	2,440	90
	JJ1	--	251	85.96	860	30
	JJ2	--	251	1,777.77	20,080	750
	KK	12.5	--	280.32	3,500	150
	LL	--	248	1,143.12	12,570	470
	MM	--	245	650.26	8,450	310
	NN	2.3	--	555.89	1,280	50
	OO	1	--	1,615.12	1,620	60
	PP	1	--	2,402.73	2,403	100
	QQ	1	--	294.13	290	10
	RR	2.5	--	--	2,310	90
	Additional volume associated with sloping			--	--	630
			Subtotal:	**42,336**	**421,273**	**16,285**
Elm Street Area - Phase 2	A1	1	--	14,354.32	14,350	530
	A2	--	241	1,670.47	7,520	280
	B	--	244	459.50	1,150	40
	C	3	--	1,338.94	4,020	150
	E	--	244	617.66	2,470	90
	G	1	--	1,209.75	1,210	40
	I (portion)	1	--	9,317.59	9,310	350
	M	3.3	--	6,175.49	20,380	750
	N	--	263	388.79	780	30
	O (portion)	--	262	521.86	1,820	60
	P	--	256	1,189.24	8,320	310
	Q	--	258	734.50	3,310	120
	R	--	251	4,097.52	40,980	1,520
	Y1	--	252.5	2,084.93	17,720	660
	Y2	--	252.5	91.26	780	30
	Z1	--	255	789.28	5,130	180
	Z2	--	255	31.46	200	10
	AA (portion)	1	--	1,504.00	1,500	55
	BB	3.3	--	3,918.32	14,570	550
	CC	1	--	307.24	310	10
	DD	12	--	180.15	2,160	80
	EE	13	--	588.78	7,650	290
	FF (portion)	1	--	5,853.01	16,270	620
	GG	13	--	44.36	580	30
	HH	13.5	--	124.16	1,680	50
	RR	2.5	--	--	1,150	40
	Pavement Removal		--	695.12	30	30
	Additional volume associated with sloping			--	--	1,210
			Subtotal:	**58,288**	**171,000**	**8,115**
			Total:	**100,623**	**554,921**	**24,400**

Notes:
1. Refer to Figures D-2 and D-4 for excavation cell identifiers.
2. Approximate volumes were rounded using computer software.
3. Based on the support of excavation (SOE) design performed by Haley & Aldrich, the sloping of excavations shown in the S-Series Technical Drawings will require the excavation of an additional approximately 1,840 cy of material from the Elm Street Area as shown in this table.
4. Total volumes shown on this table include the volumes shown on Table D-2.

TABLE D-2
ADDITIONAL SOIL REMOVAL REQUIRED FOR REPLACEMENT STORM SEWER, COVER SYSTEM, STORM WATER RETENTION AREA AND GABION WALL AT THE ELM STREET AREA

OSD STAGING SCENARIO
FINAL (100%) DESIGN REPORT
FLETCHER'S PAINT WORKS AND STORAGE FACILITY SUPERFUND SITE
GENERAL ELECTRIC COMPANY - MILFORD, NEW HAMPSHIRE

Area	Excavation Cell Identifier	Excavation Depth Below Ground Surface (feet)	Approximate Surface Area (square feet)	Approximate In-Situ Volume (cubic feet)	Approximate In-Situ Volume (cubic yards)
Elm Street Area - Phase 1	B	0.3	3,722	1,240	5
	O	4	181	720	30
	P	5	225	1,130	40
	Q	2.5	862	2160	80
	R	2.3	507.13	1,180	40
		Subtotal:	**5,497**	**6,430**	**195**
Elm Street Area - Phase 2	A	0.3	3722	1,240	50
	C	2.3	1,227	2,860	105
	D	2.3	512	1,200	40
	E	2.3	71	170	10
	F	1.3	501	670	20
	G	0.3	135	50	5
	H	0.3	1,373	460	20
	I	2.3	2,516	5,870	220
	J	3.3	16	50	5
	K	12	180	2,160	80
	L	12	589	7,070	260
	M	7.5	44	330	10
	N	5.3	124	650	20
	Q	2.5	512	1,280	50
	S	3.5	1,670	5,850	220
		Subtotal:	**13,193**	**29,910**	**1,115**
		Total:	**18,691**	**36,340**	**1,310**

Notes:
1. Refer to Figure 10 for excavation cell identifiers.
2. Approximate volumes were rounded using computer software.
3. Volume calculations for Excavation Cells K, L, M, N, O, and P are based on assumed excavation depth to the bedding for the replacement storm sewer as illustrated on Technical Drawing G-20.

TABLE D-3
ESTIMATED TOTAL VOLUME OF MATERIAL SUBJECT TO REMEDIAL ACTION AT THE MILL STREET AREA

OSD STAGING SCENARIO
FINAL (100%) DESIGN REPORT
FLETCHER'S PAINT WORKS AND STORAGE FACILITY SUPERFUND SITE
GENERAL ELECTRIC COMPANY - MILFORD, NEW HAMPSHIRE

Area	Excavation Cell Identifier	Excavation Depth Below Ground Surface (feet)	Elevation of Excavation Bottom (feet)	Approximate Surface Area (square feet)	Approximate In-Situ Volume (cubic feet)	Approximate In-Situ Volume (cubic yards)
Mill Street Area - Phase 1	A	1	--	1,623.45	1,620	60
	B	--	256	315.59	630	20
	D	--	257	929.68	1,860	70
	E	--	250	803.70	7,230	270
	F	--	254	159.29	800	30
	G	--	254	155.43	890	30
	H	--	238	831.54	19,960	740
	I	--	249	2,123.17	23,350	860
	K	--	251	2,162.23	22,000	810
	L	--	258	276.51	1,660	60
	M	--	254	2,367.63	15,260	570
	N	--	251	284.30	2,560	90
	O	--	238	3,471.58	77,420	2,870
	P	--	254	308.91	1,850	70
	Q	--	248	88.76	1,070	40
	R	--	245	907.13	13,790	510
	S	--	255	1,602.11	9,250	340
	T	--	254	1,323.03	11,090	410
	V	1	--	1,405.95	1,410	50
	Additional volume associated with sloping			--	--	700
			Subtotal:	**21,140**	**213,700**	**8,600**
Mill Street Area - Phase 2	C	1	--	731.98	730	30
	J	3	--	5,111.68	15,340	570
	U	1	--	4,809.87	4,810	180
	1	2	--	408.64	610	20
	2	2	--	184.53	390	10
	3	2	--	1,211.42	2,420	90
	4	3	--	81.89	250	5
	5	4	--	351.42	1,410	50
	6	3	--	938.67	2,820	100
	Additional volume associated with sloping			--	--	250
			Subtotal:	**13,830**	**28,780**	**1,305**
			Total:	**34,970**	**242,480**	**9,905**

Notes:
1. Refer to Figures D-3 and D-5 for excavation cell identifiers.
2. Approximate volumes were rounded using computer software.
3. Based on the support of excavation (SOE) design performed by Haley & Aldrich, the sloping of excavations shown in the S-Series Technical Drawings will require the excavation of an additional approximately 950 cy of material from the Mill Street Area as shown in this table.
4. The volumes listed in this table do not include approximately 2,000 cy of slurry material associated with the installation of the SPTC walls at the Mill Street Area, which will be transported off-site during the pre-mobilization phase of the project during following installation of the SPTC walls.

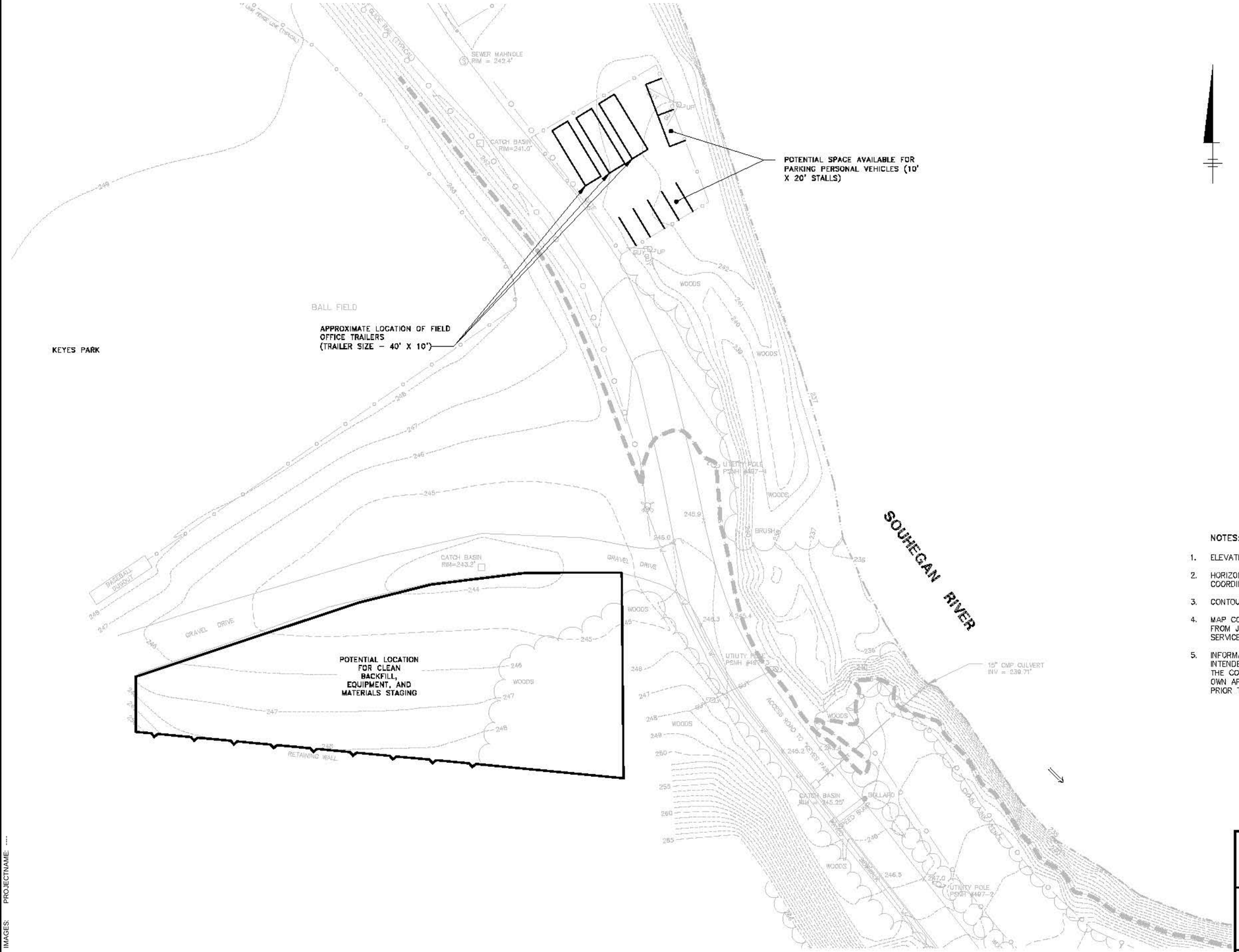

LEGEND:

- INDEX SURFACE ELEVATION CONTOUR
- INTERMEDIATE SURFACE ELEVATION CONTOUR
- CHAIN LINK FENCE
- EXISTING STORM SEWER
- EXISTING WATER LINE
- EXISTING SANITARY SEWER
- APPROXIMATE ELEVATION OF 100-YEAR FLOOD PLAIN (245)
- EDGE OF PAVEMENT
- PROPERTY LINE
- RIGHT-OF-WAY
- EXISTING EDGE OF WATER
- POTENTIAL SUPPORT ZONE
- UTILITY POLE
- CATCH BASIN
- SANITARY MANHOLE
- STORM MANHOLE
- WATER VALVE
- WATER METER
- TELEPHONE JACK
- FIRE HYDRANT
- ASBESTOS CONCRETE PIPE
- VITRIFIED CLAY PIPE
- GUY WIRE

NOTES:

1. ELEVATIONS BASED ON NORTH AMERICAN VERTICAL DATUM OF 1988.
2. HORIZONTAL DATUM BASED ON NEW HAMPSHIRE STATE PLANE COORDINATE SYSTEM OF 1983.
3. CONTOUR INTERVAL = 1 FEET.
4. MAP COMPILED FROM ACTUAL FIELD SURVEY PERFORMED BY BBL, INC. FROM JULY 16, 2003 THROUGH AUGUST 14, 2003, BY MERIDAN LAND SERVICES, INC. JANUARY 22, 2004, AND BY ARCADIS ON MAY 24, 2007.
5. INFORMATION SHOWN HEREON IS CONCEPTUAL IN NATURE AND IS INTENDED ONLY TO IDENTIFY POTENTIAL STAGING LOCATIONS AND SIZES. THE CONTRACTOR WILL ULTIMATELY BE RESPONSIBLE FOR PROPOSING ITS OWN APPROACH, WHICH WILL BE SUBJECT TO REVIEW AND APPROVAL PRIOR TO ON-SITE MOBILIZATION.

0 30' 60'
GRAPHIC SCALE

DRAFT
FOR EPA REVIEW

GENERAL ELECTRIC COMPANY
FLETCHER'S PAINT WORKS AND STORAGE FACILITY
SUPERFUND SITE - MILFORD, NEW HAMPSHIRE
FINAL (100%) DESIGN REPORT

KEYES PARK - STAGING PLAN - OSD REMEDY - SEQUENCING OF REMEDIAL ACTION

ARCADIS

FIGURE
D-1

SYR-65-JHR GMS LJP LAYER: GM=*, OFF=*REF, |0005_rs_swq_lbt, |0005_rs_spot, |005_rs_swq_lt, |005_rs_grfd_dim, |005_rs_mw PENTABLE:PLTFULL.ctb PRINTED:11/20/2012 11:25 AM BY:BDECLERCQ
X:\DIVCAD\SYRACUSE\ACT\C\B0020995\0002\D0005\DWG\REPORT\FINAL\20985001.DWG SAVED:11/20/2012 11:23 AM LAYOUT:D-1 PAGESETUP:---- PENTABLE:
XREFS: IMAGES: PROJECTNAME: ----
20985X00
20985X06

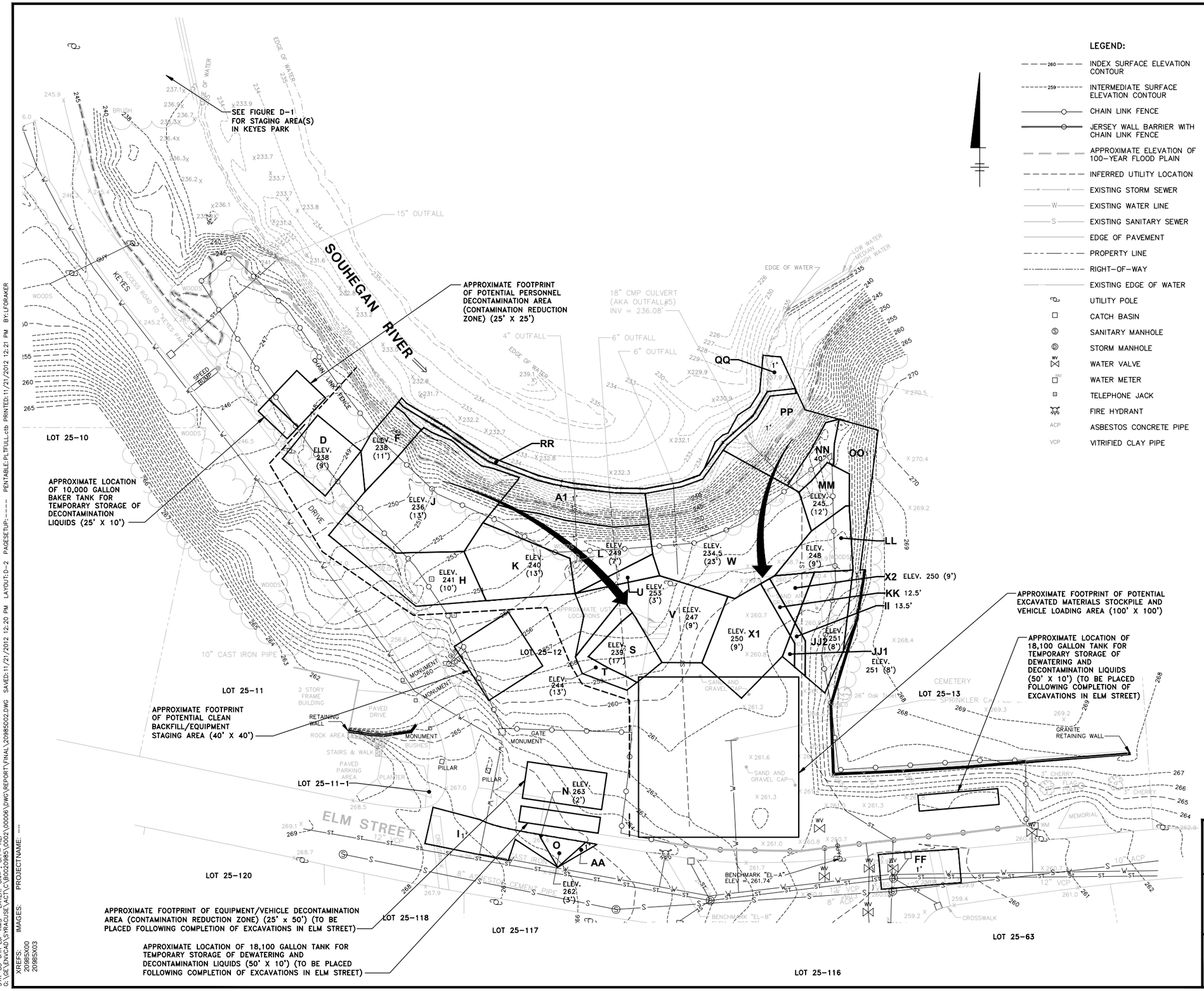

LEGEND:

- INDEX SURFACE ELEVATION CONTOUR
- INTERMEDIATE SURFACE ELEVATION CONTOUR
- CHAIN LINK FENCE
- JERSEY WALL BARRIER WITH CHAIN LINK FENCE
- APPROXIMATE ELEVATION OF 100-YEAR FLOOD PLAIN
- INFERRED UTILITY LOCATION
- EXISTING STORM SEWER
- EXISTING WATER LINE
- EXISTING SANITARY SEWER
- EDGE OF PAVEMENT
- PROPERTY LINE
- RIGHT-OF-WAY
- EXISTING EDGE OF WATER
- UTILITY POLE
- CATCH BASIN
- SANITARY MANHOLE
- STORM MANHOLE
- WATER VALVE
- WATER METER
- TELEPHONE JACK
- FIRE HYDRANT
- ASBESTOS CONCRETE PIPE
- VITRIFIED CLAY PIPE
- EXCAVATION LIMITS
- ELEV. 252 (4') — BOTTOM OF EXCAVATION ELEVATION (DEPTH SHOWN IN PARENTHESES REPRESENTS APPROXIMATE DEPTH OF SAMPLE(S) REQUIRING REMOVAL AND IS PROVIDED FOR INFORMATIONAL PURPOSES ONLY)
- 4' — DEPTH OF EXCAVATION (AS MEASURED FROM GROUND SURFACE EXCAVATION OR BOTTOM OF SAND CAP WHERE PRESENT)
- J — EXCAVATION CELL ID
- GENERAL EXCAVATION SEQUENCING
- EXCLUSION ZONE FENCING

NOTES:

1. ELEVATIONS BASED ON NORTH AMERICAN VERTICAL DATUM OF 1988.
2. HORIZONTAL DATUM BASED ON NEW HAMPSHIRE STATE PLANE COORDINATE SYSTEM OF 1983.
3. CONTOUR INTERVAL = 1 FEET.
4. MAP COMPILED FROM ACTUAL FIELD SURVEY PERFORMED BY BBL, INC. FROM JULY 16, 2003 THROUGH AUGUST 14, 2003, BY MERIDAN LAND SERVICES, INC. JANUARY 22, 2004, AND BY ARCADIS ON MAY 24, 2007.
5. ELM STREET SITE PROPERTY LINE SHOWN WAS ESTABLISHED FROM DEEDS OF RECORD, SURVEY, AND EXISTING MONUMENTATION. OTHER PROPERTY LINES SHOWN WERE OBTAINED FROM TOWN OF MILFORD TAX MAP 25.
6. SEE DRAWING G-13 IN APPENDIX B FOR ADDITIONAL INFORMATION ON EXCAVATION LIMITS.
7. EXCAVATION WITHIN ELM STREET MUST BE PERFORMED PRIOR TO INITIATION OF ACTIVE EXCAVATION ACTIVITIES AT THE MILL STREET AREA.
8. INFORMATION SHOWN HEREON IS CONCEPTUAL IN NATURE AND IS INTENDED ONLY TO IDENTIFY POTENTIAL STAGING LOCATIONS AND SIZES. THE CONTRACTOR WILL ULTIMATELY BE RESPONSIBLE FOR PROPOSING ITS OWN APPROACH, WHICH WILL BE SUBJECT TO REVIEW AND APPROVAL PRIOR TO ON-SITE MOBILIZATION.
9. DUE TO SPACE LIMITATIONS THE VARIOUS STAGING AREAS WILL NEED TO BE RELOCATED DURING THE PERFORMANCE OF THE REMEDIATION ACTIVITIES.

0 30' 60'
GRAPHIC SCALE

DRAFT
FOR EPA REVIEW

GENERAL ELECTRIC COMPANY
FLETCHER'S PAINT WORKS AND STORAGE FACILITY
SUPERFUND SITE - MILFORD, NEW HAMPSHIRE
FINAL (100%) DESIGN REPORT

PHASE 1 SOIL REMOVAL AREAS - ELM STREET AREA - OSD REMEDY - SEQUENCING OF REMEDIAL ACTION

ARCADIS

FIGURE
D-2

SYR-85-JHR LJP AMS LAYER: ON=*, OFF=*REF PENTABLE:PLTFULL.ctb PRINTED:11/21/2012 12:21 PM BY:LFORAKER
G:\GE\ENVCAD\SYRACUSE\ACT\G\B0020985\0002\00006\DWG\REPORT\FINAL\20985D02.DWG SAVED:11/21/2012 12:20 PM LAYOUT:D-2 PAGESETUP:---- PROJECTNAME: ----
XREFS: 20985X00 20985X03 IMAGES:

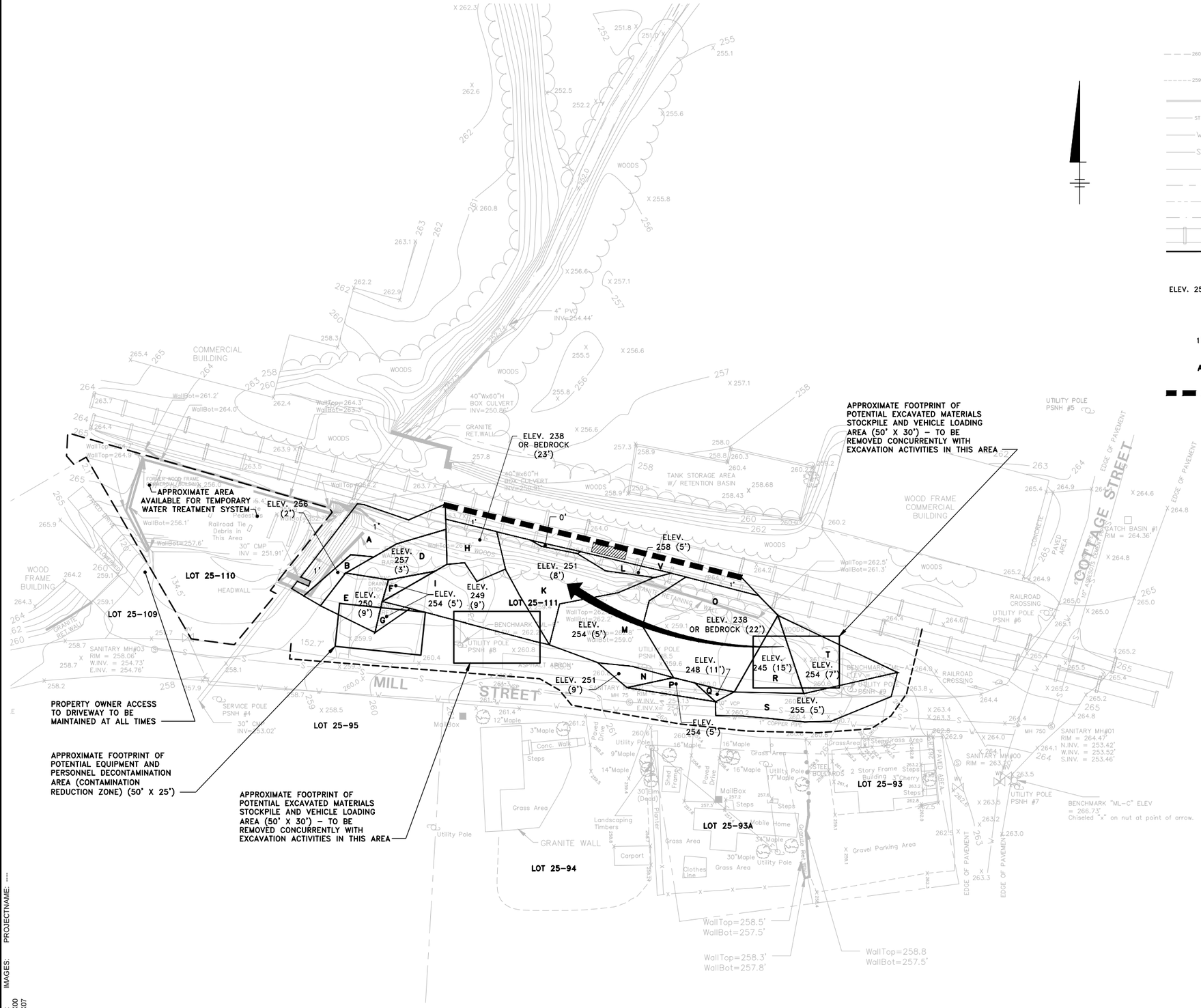

LEGEND:

- EXISTING INDEX SURFACE ELEVATION CONTOUR
- EXISTING INTERMEDIATE SURFACE ELEVATION CONTOUR
- JERSEY WALL BARRIER
- EXISTING STORM SEWER
- EXISTING WATER LINE
- EXISTING SANITARY SEWER
- EDGE OF PAVEMENT
- PROPERTY LINE
- RIGHT-OF-WAY
- EDGE OF DITCH
- EXISTING RAILROAD TRACKS
- EXCAVATION LIMITS
- ELEV. 252 (4') — BOTTOM OF EXCAVATION ELEVATION (DEPTH SHOWN IN PARENTHESES REPRESENTS APPROXIMATE DEPTH OF SAMPLE(S) REQUIRING REMOVAL AND IS PROVIDED FOR INFORMATIONAL PURPOSES ONLY)
- 1' — DEPTH OF EXCAVATION (AS MEASURED FROM GROUND SURFACE EXCAVATION OR BOTTOM OF SAND CAP WHERE PRESENT)
- A — EXCAVATION CELL ID
- INDICATES A 1-FOOT VERTICAL TO 1.5 FOOT HORIZONTAL EXCAVATION SLOPE TO 1 FOOT BELOW BALLAST
- FOCUSED EXCAVATION
- UTILITY POLE
- CATCH BASIN
- SANITARY MANHOLE
- STORM MANHOLE
- WATER VALVE
- WATER METER
- TELEPHONE JACK
- FIRE HYDRANT
- ACP — ASBESTOS CONCRETE PIPE
- VCP — VITRIFIED CLAY PIPE
- GENERAL EXCAVATION SEQUENCING
- EXCLUSION ZONE FENCING

NOTES:

1. ELEVATIONS BASED ON NORTH AMERICAN VERTICAL DATUM OF 1988.
2. HORIZONTAL DATUM BASED ON NEW HAMPSHIRE STATE PLANE COORDINATE SYSTEM OF 1983.
3. CONTOUR INTERVAL = 1 FOOT.
4. MAP COMPILED FROM ACTUAL FIELD SURVEY PERFORMED BY BBL, INC. FROM JULY 16, 2003 THROUGH AUGUST 14, 2003, AND FROM MERIDAN LAND SERVICES, INC. ON JANUARY 22, 2004, AND BY ARCADIS ON MAY 24, 2007.
5. MILL STREET SITE PROPERTY LINE SHOWN WAS ESTABLISHED FROM DEEDS OF RECORD, SURVEY, AND EXISTING MONUMENTATION. OTHER PROPERTY LINES SHOWN WERE OBTAINED FROM TOWN OF MILFORD TAX MAP 25.
6. LOCATION OF UNDERGROUND UTILITIES AND OTHER UNDERGROUND STRUCTURES OBTAINED BY FIELD MEASUREMENTS WHERE POSSIBLE. LOCATION OF WATER, SEWER, AND DRAINAGE UTILITIES OBTAINED FROM TOWN OF MILFORD DEPARTMENT OF PUBLIC WORKS RECORDS.
7. SEE DRAWING G-16 IN APPENDIX B FOR ADDITIONAL INFORMATION ON EXCAVATION LIMITS.
8. STAGING LOCATIONS AT THE MILL STREET AREA WILL BE A FUNCTION OF THE FINAL SEQUENCING OF EXCAVATION ACTIVITIES AT THIS AREA. IT IS ANTICIPATED THAT STAGING OF MATERIALS, EQUIPMENT, VEHICLES, ETC. NEEDED AT THIS AREA WILL OCCUR ON THE PORTION OF THE AREA THAT IS NOT BEING ACTIVELY EXCAVATED
9. INFORMATION SHOWN HEREON IS CONCEPTUAL IN NATURE AND IS INTENDED ONLY TO IDENTIFY POTENTIAL STAGING LOCATIONS AND SIZES. THE CONTRACTOR WILL ULTIMATELY BE RESPONSIBLE FOR PROPOSING ITS OWN APPROACH, WHICH WILL BE SUBJECT TO REVIEW AND APPROVAL PRIOR TO ON-SITE MOBILIZATION.
10. DUE TO SPACE LIMITATIONS THE VARIOUS STAGING AREAS WILL NEED TO BE RELOCATED DURING THE PERFORMANCE OF THE REMEDIATION ACTIVITIES.

0 30' 60'
GRAPHIC SCALE

DRAFT
FOR EPA REVIEW

GENERAL ELECTRIC COMPANY
FLETCHER'S PAINT WORKS AND STORAGE FACILITY
SUPERFUND SITE - MILFORD, NEW HAMPSHIRE
FINAL (100%) DESIGN REPORT

PHASE 1 SOIL REMOVAL AREAS - MILL STREET AREA - OSD REMEDY - SEQUENCING OF REMEDIAL ACTION

ARCADIS

FIGURE
D-3

SYR-85-JHR KLS LJP LAYER: ON=*, OFF=*REF*
G:\GE\ENVCAD\SYRACUSE\ACT\C\B0020985\0002\00006\DWG\REPORT\FINAL\20985D03.DWG SAVED:11/21/2012 12:22 PM LAYOUT:D-3 PAGESETUP:---- PENTABLE:PLTFULL.ctb PRINTED:11/21/2012 12:22 PM BY:LFORAKER
XREFS: 20985X00 20985X07 IMAGES: PROJECTNAME: ----

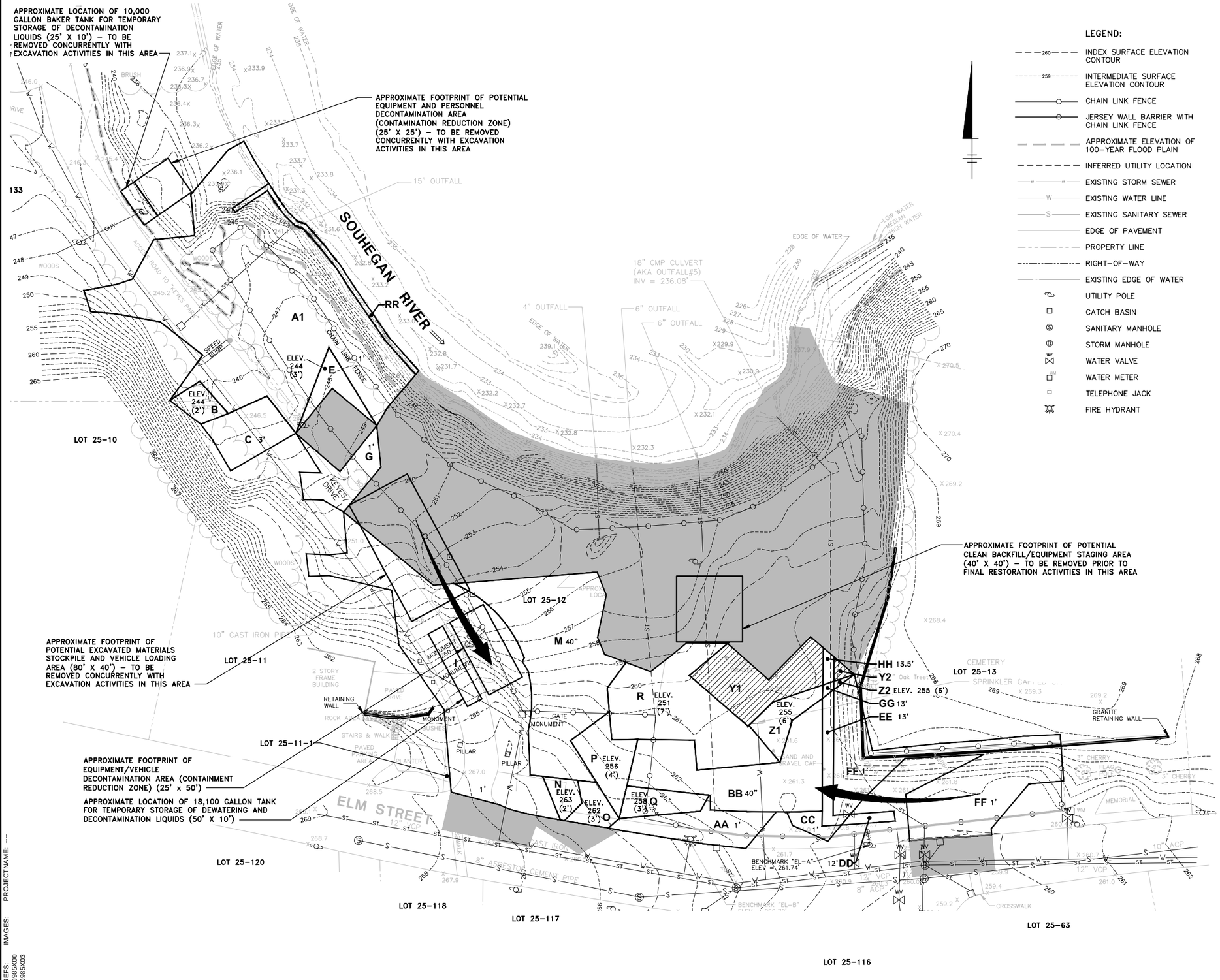

LEGEND:

- 260 — INDEX SURFACE ELEVATION CONTOUR
- 259 — INTERMEDIATE SURFACE ELEVATION CONTOUR
- CHAIN LINK FENCE
- JERSEY WALL BARRIER WITH CHAIN LINK FENCE
- APPROXIMATE ELEVATION OF 100-YEAR FLOOD PLAIN
- INFERRED UTILITY LOCATION
- EXISTING STORM SEWER
- W — EXISTING WATER LINE
- S — EXISTING SANITARY SEWER
- EDGE OF PAVEMENT
- PROPERTY LINE
- RIGHT-OF-WAY
- EXISTING EDGE OF WATER
- UTILITY POLE
- CATCH BASIN
- SANITARY MANHOLE
- STORM MANHOLE
- WATER VALVE
- WM — WATER METER
- TELEPHONE JACK
- FIRE HYDRANT
- ACP — ASBESTOS CONCRETE PIPE
- VCP — VITRIFIED CLAY PIPE
- EXCAVATION LIMITS
- ELEV. 252 (4') — BOTTOM OF EXCAVATION ELEVATION (DEPTH SHOWN IN PARENTHESES REPRESENTS APPROXIMATE DEPTH OF SAMPLE(S) REQUIRING REMOVAL AND IS PROVIDED FOR INFORMATIONAL PURPOSES ONLY)
- 4' — DEPTH OF EXCAVATION (AS MEASURED FROM GROUND SURFACE EXCAVATION OR BOTTOM OF SAND CAP WHERE PRESENT)
- A — EXCAVATION CELL ID
- GENERAL EXCAVATION SEQUENCING
- PHASE 1 EXCAVATION – BACKFILLED TO SUBGRADE ELEVATION FOR APPLICABLE SURFACE RESTORATION
- EXCAVATION IN THIS AREA TO BE SLOPED FROM CELLS R, Z1, AND Z2 TO CELLS X1, JJ1, AND JJ2 (SEE DRAWING G-12)

NOTES:

1. ELEVATIONS BASED ON NORTH AMERICAN VERTICAL DATUM OF 1988.
2. HORIZONTAL DATUM BASED ON NEW HAMPSHIRE STATE PLANE COORDINATE SYSTEM OF 1983.
3. CONTOUR INTERVAL = 1 FEET.
4. MAP COMPILED FROM ACTUAL FIELD SURVEY PERFORMED BY BBL, INC. FROM JULY 16, 2003 THROUGH AUGUST 14, 2003, BY MERIDAN LAND SERVICES, INC. JANUARY 22, 2004, AND BY ARCADIS ON MAY 24, 2007.
5. ELM STREET SITE PROPERTY LINE SHOWN WAS ESTABLISHED FROM DEEDS OF RECORD, SURVEY, AND EXISTING MONUMENTATION. OTHER PROPERTY LINES SHOWN WERE OBTAINED FROM TOWN OF MILFORD TAX MAP 25.
6. SEE DRAWING G-14 IN APPENDIX B FOR ADDITIONAL INFORMATION ON EXCAVATION LIMITS.
7. INFORMATION SHOWN HEREON IS CONCEPTUAL IN NATURE AND IS INTENDED ONLY TO IDENTIFY POTENTIAL STAGING LOCATIONS AND SIZES. THE CONTRACTOR WILL ULTIMATELY BE RESPONSIBLE FOR PROPOSING ITS OWN APPROACH, WHICH WILL BE SUBJECT TO REVIEW AND APPROVAL PRIOR TO ON-SITE MOBILIZATION.
8. DUE TO SPACE LIMITATIONS THE VARIOUS STAGING AREAS WILL NEED TO BE RELOCATED DURING THE PERFORMANCE OF THE REMEDIATION ACTIVITIES.
9. IN PHASE 2, PERIMETER FENCING WILL SERVE AS EXCLUSION ZONE FENCING.

DRAFT
FOR EPA REVIEW

GENERAL ELECTRIC COMPANY
FLETCHER'S PAINT WORKS AND STORAGE FACILITY
SUPERFUND SITE - MILFORD, NEW HAMPSHIRE
FINAL (100%) DESIGN REPORT

PHASE 2 SOIL REMOVAL AREAS - ELM STREET AREA - OSD REMEDY - SEQUENCING OF REMEDIAL ACTION

ARCADIS

FIGURE
D-4

SYR-85-JHR QMS LJP LAYER: ON=*, OFF=*REF
G:\GE\ENVCAD\SYRACUSE\ACT\C\B0020985\0002\00006\DWG\REPORT\FINAL\20985004.DWG SAVED:11/21/2012 12:23 PM LAYOUT:D-4 PAGESETUP:---- PENTABLE:PLTFULL.ctb PRINTED:11/21/2012 12:23 PM BY:LFORAKER
XREFS: 20985X00 20985X03 IMAGES: PROJECTNAME: ----

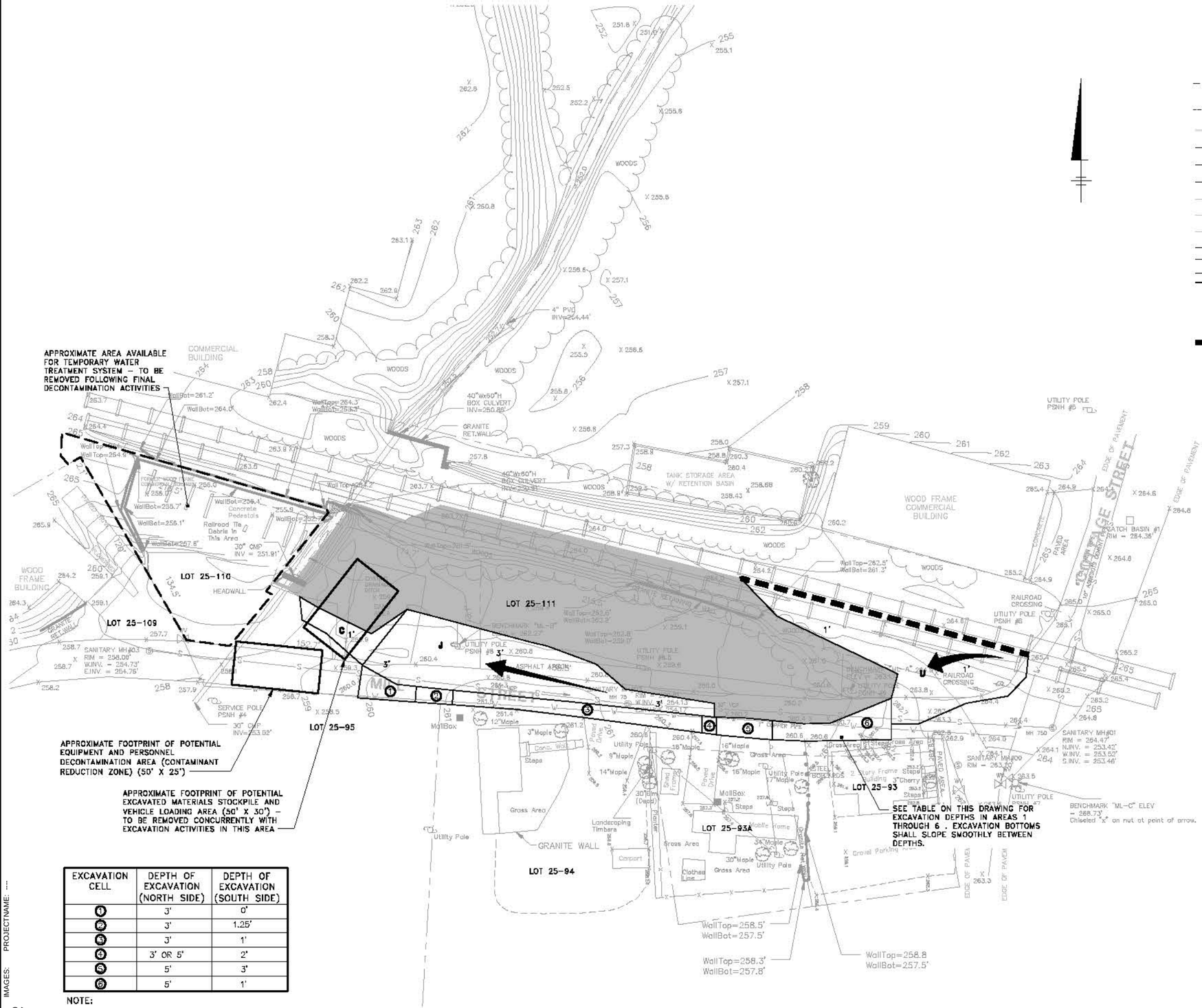

LEGEND:

- EXISTING INDEX SURFACE ELEVATION CONTOUR
- EXISTING INTERMEDIATE SURFACE ELEVATION CONTOUR
- JERSEY WALL BARRIER
- EXISTING STORM SEWER
- EXISTING WATER LINE
- EXISTING SANITARY SEWER
- EDGE OF PAVEMENT
- PROPERTY LINE
- RIGHT-OF-WAY
- EDGE OF DITCH
- EXISTING RAILROAD TRACKS
- EXCAVATION LIMITS
- 1' DEPTH OF EXCAVATION
- U EXCAVATION CELL ID
- INDICATES A 1-FOOT VERTICAL TO 1.5 FOOT HORIZONTAL EXCAVATION SLOPE TO 1 FOOT BELOW BALLAST
- UTILITY POLE
- CATCH BASIN
- SANITARY MANHOLE
- STORM MANHOLE
- WATER VALVE
- WATER METER
- TELEPHONE JACK
- FIRE HYDRANT
- ACP ASBESTOS CONCRETE PIPE
- VCP VITRIFIED CLAY PIPE
- GENERAL EXCAVATION SEQUENCING
- PHASE 1 EXCAVATION – BACKFILLED TO SUBGRADE ELEVATION FOR APPLICABLE SURFACE RESTORATION

NOTES:

1. ELEVATIONS BASED ON NORTH AMERICAN VERTICAL DATUM OF 1988.
2. HORIZONTAL DATUM BASED ON NEW HAMPSHIRE STATE PLANE COORDINATE SYSTEM OF 1983.
3. CONTOUR INTERVAL = 1 FOOT.
4. MAP COMPILED FROM ACTUAL FIELD SURVEY PERFORMED BY BBL, INC. FROM JULY 16, 2003 THROUGH AUGUST 14, 2003, AND FROM MERIDAN LAND SERVICES, INC. ON JANUARY 22, 2004, AND BY ARCADIS ON MAY 24, 2007.
5. MILL STREET SITE PROPERTY LINE SHOWN WAS ESTABLISHED FROM DEEDS OF RECORD, SURVEY, AND EXISTING MONUMENTATION. OTHER PROPERTY LINES SHOWN WERE OBTAINED FROM TOWN OF MILFORD TAX MAP 25.
6. LOCATION OF UNDERGROUND UTILITIES AND OTHER UNDERGROUND STRUCTURES OBTAINED BY FIELD MEASUREMENTS WHERE POSSIBLE. LOCATION OF WATER, SEWER, AND DRAINAGE UTILITIES OBTAINED FROM TOWN OF MILFORD DEPARTMENT OF PUBLIC WORKS RECORDS.
7. SEE DRAWING G-17 IN APPENDIX B FOR ADDITIONAL INFORMATION ON EXCAVATION LIMITS.
8. STAGING LOCATIONS AT THE MILL STREET AREA WILL BE A FUNCTION OF THE FINAL SEQUENCING OF EXCAVATION ACTIVITIES AT THIS AREA. IT IS ANTICIPATED THAT STAGING OF MATERIALS, EQUIPMENT, VEHICLES, ETC. NEEDED AT THIS AREA WILL OCCUR ON THE PORTION OF THE AREA THAT IS NOT BEING ACTIVELY EXCAVATED.
9. INFORMATION SHOWN HEREON IS CONCEPTUAL IN NATURE AND IS INTENDED ONLY TO IDENTIFY POTENTIAL STAGING LOCATIONS AND SIZES. THE CONTRACTOR WILL ULTIMATELY BE RESPONSIBLE FOR PROPOSING ITS OWN APPROACH, WHICH WILL BE SUBJECT TO REVIEW AND APPROVAL PRIOR TO ON-SITE MOBILIZATION.
10. DUE TO SPACE LIMITATIONS THE VARIOUS STAGING AREAS WILL NEED TO BE RELOCATED DURING THE PERFORMANCE OF THE REMEDIATION ACTIVITIES.
11. IN PHASE 2, PERIMETER FENCING WILL SERVE AS EXCLUSION ZONE FENCING.

0 30' 60'
GRAPHIC SCALE

EXCAVATION CELL	DEPTH OF EXCAVATION (NORTH SIDE)	DEPTH OF EXCAVATION (SOUTH SIDE)
1	3'	0'
2	3'	1.25'
3	3'	1'
4	3' OR 5'	2'
5	5'	3'
6	5'	1'

NOTE:

1. SLOPE EXCAVATION UNIFORMLY BETWEEN NORTHERN AND SOUTHERN SIDES.

DRAFT
FOR EPA REVIEW

GENERAL ELECTRIC COMPANY
FLETCHER'S PAINT WORKS AND STORAGE FACILITY
SUPERFUND SITE - MILFORD, NEW HAMPSHIRE
FINAL (100%) DESIGN REPORT

PHASE 2 SOIL REMOVAL AREAS - MILL STREET AREA - OSD REMEDY - SEQUENCING OF REMEDIAL ACTION

ARCADIS

FIGURE
D-5

SYR-BS-JHR KLS LJP LAYER: ON=*, OFF=*REF*
G:\GE\ENVIRO\SYRACUSE\ACT\C\B0020985\D002\G0006\DWG\REPORT\FINAL\20985D05.DWG SAVED:11/21/2012 12:24 PM LAYOUT:D-5 PAGESETUP:---- PENTABLE:PLTFULL.ctb PRINTED:11/21/2012 12:24 PM BY:LFORAKER
XREFS: 20985X00 20985X07 IMAGES: PROJECTNAME: ---

Appendix E

Truck Route and Traffic Analysis

Imagine the result

DRAFT FOR EPA REVIEW

General Electric Company
Albany, New York

Truck Route and Traffic Analysis Report

Appendix E to the Final (100%) Design Report for the OSD Remedy

Fletcher's Paint Works and Storage Facility
Superfund Site - Operable Unit 1
Milford, New Hampshire

November 21, 2012

DRAFT

FOR EPA REVIEW

Fletcher's Paint Works and
Storage Facility Superfund Site –
Operable Unit 1
Milford, New Hampshire

Prepared for:

General Electric Company

Prepared by:

ARCADIS U.S., Inc.
1100 Superior Avenue
Suite 1250
Cleveland, Ohio 44114
Tel 216 781 6177
Fax 216 781 6243
www.arcadis-us.com

Our Ref.:

B0020985

Date:

November 21, 2012

ARCADIS

DRAFT
FOR EPA REVIEW

Table of Contents

Abbreviations **i**

1. Introduction and Summary **1**

1.1 Purpose and Objective 1

1.2 Previous Related Submittals 1

1.3 Executive Summary 2

2. Impact Analysis **4**

2.1 Off-Site Disposal Remedy Description 4

2.2 Estimated Truck Traffic Associated with Remedy Implementation 5

2.2.1 Concurrent Excavation of Impacted Material from the Elm and Mill Street Areas and Transportation to the Applicable Off-Site Disposal Facility 5

2.2.2 Transportation of Clean Materials for Site Restoration 6

2.2.3 Summary 9

2.3 Truck Routes 9

2.4 Overview of Impacts Associated with Remedy Implementation 10

2.4.1 Truck Routes 10

2.4.2 Adjacent Properties 13

3. Recommendations and Analysis **15**

3.1 Truck Route Recommendations 15

3.2 Capacity Analysis 16

3.3 Impact Summary 18

3.4 Impact Mitigation Recommendations 19

Figures

E-1 Primary Truck Route – Elm Street Area to NH Route 101 East

E-2 Primary Truck Route – Mill Street Area to NH Route 101 East

E-3 Primary Truck Staging Area – Site Modifications

E-4 Overflow Staging Area – Site Modifications

Attachments

A Preliminary Traffic Report

B Intersection Summaries

C Peak Hour Summary Tables

D Existing Traffic Counts

E Projected 2009 Capacity Analyses

Abbreviations

Addendum No.1	*Preliminary (30%) Design Report Addendum No. 1*
ADT	Average daily traffic
cy	Cubic yards
EPA	United States Environmental Protection Agency
Final Design Report	Final (100%) Design Report for the OSD Remedy
GE	General Electric Company
Intermediate LTTD Design Report	Intermediate (60%) Design Report for the LTTD Remedy
Intermediate OSD Design Report	Intermediate (60%) Design Report for the OSD Remedy
LOS	Level of service
LTTD	Low temperature thermal desorption
mg/kg	Milligrams per kilogram (parts per million [ppm])
OSD	Off-site disposal
OU-1	Operable Unit 1
ppm	Parts per million
PCBs	Polychlorinated biphenyls
Preliminary Design Report	Preliminary (30%) Design Report for the LTTD Remedy
Preliminary Traffic Report	Truck Route and Traffic Analysis Preliminary Report
ROD	Record of Decision
SCL	Soil cleanup level

sec	Seconds
Site	Fletcher's Paint Works and Storage Facility Superfund Site
Town	Town of Milford
TR/TA Report	Truck Route and Traffic Analysis Report
TSCA	Toxic Substances Control Act
VHB	Vannasse, Hangen, Brustlin, Inc.

1. Introduction and Summary

1.1 Purpose and Objective

The purpose of this revised *Truck Route and Traffic Analysis Report* (TR/TA Report) is to support the revised *Final (100%) Design Report for the OSD Remedy* (Final Design Report) by providing information regarding the potential impacts to the vehicular and pedestrian traffic patterns associated with implementation of the off-site disposal (OSD) soil remedy for Operable Unit 1 (OU-1) of the Fletcher's Paint Works and Storage Facility Superfund Site (the Site) located in Milford, New Hampshire. In support of this objective, Section 2 of this TR/TA Report provides an overview of the OSD soil remedy, including: a description of the significant activities associated with implementation of the OSD soil remedy; an overview of the truck traffic associated with implementation of the OSD soil remedy; the identification of potential truck routes; an overview of the potential impacts to properties adjacent to the Site; and the recommended truck routes associated with implementation of the OSD soil remedy for OU-1 soils. Section 3 of this report provides an analysis of the traffic data collected during the Remedial Design phase of the project, including: recommended truck routes for transportation of materials to and from the Site; a traffic capacity analysis for the recommended truck routes; an evaluation of the potential impacts associated with the implementation of the OSD soil remedy in light of the traffic capacity analysis and an evaluation of the need for measures to mitigate such impacts.

1.2 Previous Related Submittals

The General Electric Company (GE) has previously submitted information related to the identification of preliminary truck routes and traffic counts in several submittals, including:

- *Truck Route and Traffic Analysis Preliminary Report* (Preliminary Traffic Report) prepared by Vannasse, Hangen, Brustlin, Inc. (VHB), presented as Appendix A to the *Preliminary (30%) Design Report Addendum No. 1* (Addendum No.1) submitted on May 11, 2006;

- *Truck Route and Traffic Analysis Report* presented as Appendix E of the *Intermediate (60%) Design Report for the LTTD Remedy* (Intermediate LTTD Design Report) submitted on June 4, 2007; and

- *Truck Route and Traffic Analysis Report* presented as Appendix E of the *Intermediate (60%) Design Report for the OSD Remedy* (Intermediate OSD Design Report) submitted on June 12, 2007.

Concurrent with the Intermediate OSD Design Report, GE also submitted a Remedy Comparison Document on June 12, 2007, which provided a comparison of the traffic information associated with the implementation of the OSD soil remedy (as presented in Intermediate OSD Design Report) and similar information associated with the implementation of the low-temperature thermal desorption (LTTD) soil remedy (as presented in the Intermediate LTTD Design Report).

ARCADIS provided an updated version of the TR/RA Report as Appendix E of the December 2007 draft Final Design Report. Subsequent to that submittal, ARCADIS made the following additional submittals related to the TR/TA Report:

- A letter from GE to the EPA dated October 30, 2008 identifying the former Milford Police Department property as the primary truck staging area and providing revised elements of the TR/TA Report;

- A letter from GE to the EPA dated June 22, 2009 providing additional revisions to the TR/TA Report; and

- A letter from GE to the EPA dated August 13, 2009 providing additional revisions to the TR/TA Report.

This revised TR/TA Report presents additional revisions resulting from modifications to the Remedial Design resulting from EPA comments on the December 2007 draft Final Design Report (as provided in a letter to GE dated September 30, 2011) and supplemental design data collection activities performed at the Site between May and October 2012 (see Section 2.4 of the revised Final Design Report for additional details).

1.3 Executive Summary

As previously indicated, this document: provides evaluations of the anticipated truck traffic associated with implementation of the OSD soil remedy; summarizes the truck routes proposed for transportation of excavated materials from the Elm and Mill Street Areas through the Town of Milford (Town) to the applicable off-site disposal facilities, and also from off-site sources of backfill to the Elm and Mill Street Areas; and provides an evaluation of the potential impacts to those routes and properties adjacent to the Site based on the information contained herein. As part of the final design for the OSD soil remedy, the study area was refined to focus on the proposed truck routes from the Elm and Mill Street Areas to NH Route 101, and to the Elm and Mill Street Areas from NH Route 101, based on the routes identified in the Preliminary Traffic Report which was prepared for the LTTD soil remedy (and included herein for informational purposes

as Attachment A). As a result, this document provides a comparison of traffic in the vicinity of the Site under existing conditions and under projected conditions during implementation of the Remedial Action to determine the actual impact on the proposed truck routes determined in the Preliminary Traffic Report. Based on those findings, it was determined that the implementation of the OSD soil remedy will have limited or negligible impacts on pedestrian or vehicular traffic in the vicinity of the Site. As a result, it is the conclusion of this TR/TA Report that no measures will be necessary to mitigate potential impacts associated with implementation of the OSD soil remedy.

2. Impact Analysis

This section of the report provides: an overview of the major components of the OSD soil remedy; an estimate of the truck traffic associated with remedy implementation; the identification of truck routes for transportation of materials to and from the Site; and a summary of the potential impacts to the typical pedestrian and vehicular traffic patterns and volumes in the vicinity of the Site resulting from implementation of the OSD soil remedy.

2.1 Off-Site Disposal Remedy Description

In general, the OSD soil remedy includes the following major work activities:

- Site preparation;
- Installation of excavation support systems;
- Concurrent excavation and transportation of soil and debris from the Elm and Mill Street Areas to the appropriate off-site disposal facilities;
- Transportation and placement of clean backfill and restoration materials to the Site; and
- Backfilling and site restoration.

Certain of the above-listed activities are not expected to generate a significant volume of truck traffic on adjacent public streets. As a result, this report focuses on those aspects of the Remedial Action that will generate the most significant volume of truck traffic impacting the normal pedestrian and vehicular traffic patterns and volumes in the vicinity of the Site. Specifically, the evaluation presented in this report focuses on truck traffic associated with the following activities:

- Concurrent excavation of impacted material from the Elm and Mill Street Areas and transportation to the applicable off-site disposal facilities; and
- Transportation of clean materials to the Site for use in backfilling and site restoration.

Additional details regarding the volume of truck traffic associated with each of these activities is presented in the following section.

2.2 Estimated Truck Traffic Associated with Remedy Implementation

This section provides a summary of the estimated truck traffic associated with each of the components of the OSD soil remedy that are expected to generate the most significant volume of truck traffic on public streets adjacent to the Site. In the course of developing this evaluation, certain assumptions were made, as further discussed below.

As indicated in the staging scenario evaluation included in Appendix D to the revised Final Design Report, it was assumed for the purposes of this revised TR/TA Report, that Keyes Drive will be closed to public travel during a significant portion of the Remedial Action. (As further discussed in Section 2.4.2 below, a design for an alternate access/parking area for Keyes Park was provided to EPA as part of a July 2012 Technical Scope of Work - Accelerated Remedial Action Items enabling the Town to continue using Keyes Park during implementation of the OU-1 soil remedy.) In addition, the evaluation presented herein does not factor in certain ancillary traffic associated with this type of project (e.g., overnight courier deliveries, temporary sanitary facility service, miscellaneous supply deliveries, equipment mobilization/demobilization, the personal vehicles of Site workers, etc.). The remainder of this section provides a summary of the estimated truck traffic associated with each of the components of the OSD soil remedy that are expected to generate the most significant volume of truck traffic on public streets adjacent to the Site.

2.2.1 Concurrent Excavation of Impacted Material from the Elm and Mill Street Areas and Transportation to the Applicable Off-Site Disposal Facility

Section 2.6 of the revised Final Design Report indicates that the volume of material requiring excavation at the Elm and Mill Street Areas to achieve the soil cleanup levels (SCLs) specified in EPA's Record of Decision (ROD, as amended) totals approximately 30,175 cubic yards (cy), including 21,220 cy from the Elm Street Area and 8,955 cy from the Mill Street Area. Also, approximately 2,030 cy of additional material requiring off-site disposal will be generated during the implementation of the Remedial Action. This total includes approximately 2,000 cy of slurry material associated with the installation of the soldier pile tremie concrete (SPTC) excavation supports at the Mill Street Area and approximately 30 cy of asphalt pavement/subbase materials along Keyes Drive that is not required to be excavated to achieve the Site SCLs. Therefore, the total volume of materials subject to off-site disposal is 32,205 cy.

The revised Final Design Report also indicates that an additional 1,310 cy of material will be excavated at the Elm Street Area to facilitate installation of an engineered cover system, replacement storm sewer, storm water retention area, and gabion walls at the

Elm Street Area. In addition, it is estimated that approximately 2,790 cy of additional material will be excavated from the Elm and Mill Street Areas as part of excavation sloping associated with safely implementing the Remedial Action. However, as presented in the revised Final Design Report, these additional materials will be used as backfill in deeper excavations that are located within the horizontal extent of the cover system (at the Elm Street Area) or within subsurface excavations at the Mill Street Area. As the additional 4,100 cy of material summarized above are not subject to off-site disposal, these materials will not generate any truck traffic on public streets adjacent to the Site.

It is assumed that the 32,205 cy of materials excavated from the Elm and Mill Street Areas will be transported for off-site disposal utilizing dump trucks with a capacity of 20 cy. As a result, it will take approximately 3,221 truck trips to transport the excavated impacted materials from the Elm and Mill Street Areas to the applicable off-site disposal facilities. This total will include approximately 200 truck trips to transport the slurry associated with the installation of the SPTC walls at the Mill Street Area. As those truck trips are anticipated to occur prior to the full-scale implementation of the Remedial Action, those trips are not included in the calculation of the daily number of truck trips anticipated during full-scale implementation, as discussed in Section 2.4. The estimated total truck trips described in the report assumes one trip to be one leg of an operation, such as from an off-site location to the Elm Street Area, with the return leg to the applicable off-site disposal facility counting as another trip. It should be noted that the soil removal volumes presented in the revised Final Design Report are divided between soils containing polychlorinated biphenyls (PCBs) at concentrations equal to or greater than 50 milligrams per kilogram (mg/kg, or parts per million [ppm]), which represents soils subject to regulation under the Toxic Substances Control Act (TSCA), and soils containing PCBs at concentrations less than 50 mg/kg, which are not subject to TSCA disposal regulations. In addition, certain of those soils may also contain concentrations of non-PCB constituents at concentrations requiring management and handling in accordance Resource Conservation and Recovery Act (RCRA) disposal regulations. However, for the purposes of this report, no distinction is necessary between the various types of soil since the potential impacts to public roadways in the vicinity of the Site will be the same regardless of which off-site disposal facility is utilized.

2.2.2 Transportation of Clean Materials for Site Restoration

Implementation of the OSD soil remedy will require the selected remedial contractor (the Remedial Action Contractor) to import clean materials that will be used as part of site restoration. This includes materials associated with the following activities: backfilling of the excavation areas at the Elm and Mill Street Areas; installation of an

engineered cover system at the Elm Street Area; installation of riprap materials along the river banks of the Souhegan River and adjacent to the cemetery abutting the Elm Street Area; and miscellaneous site restoration. Additional details regarding the volume of clean material associated with each of these activities and the quantity of truck trips necessary to transport such materials is provided below.

Elm Street Area Surface Restoration

- Engineered cover system – This cover system consists of a 40-inch layer of clean backfill materials (including an 18-inch low-permeability layer, an 18-inch sand layer, and a 4-inch vegetated topsoil layer). The revised Final Design Report estimates that approximately 0.9 acre of the Elm Street Area will receive this engineered cover system. As a result, a total of approximately 4,700 cy of clean imported material will be transported to the Elm Street Area for the engineered cover system.

- Riverbank/cemetery/Keyes Drive embankment restoration – The riverbank at the Elm Street Area and the embankments adjacent to the cemetery and along Keyes Drive will be restored with stone (embankment along Keyes Drive), riprap (riverbank and cemetery embankment), and gabions (riverbank only) to provide flood protection and/or structural support. It is estimated that this will require the transportation of approximately 1,605 cy of riprap materials to the Elm Street Area.

- Asphalt/concrete pavement – Portions of Keyes Drive and Elm Street will be restored with asphalt pavement. In addition, the site restoration plans include the construction of additional parking at the Elm Street Area. Finally, the sidewalk along Elm Street will be restored with concrete pavement. It is estimated that this will require the transportation of approximately 885 cy of pavement restoration materials (including subbase materials) to the Elm Street Area.

- Storm Water Retention Area – A storm water retention area will be constructed to manage storm water run-off from the new parking lot at the Elm Street Area. The retention area will include a coarse aggregate, soil filter layer, mulch layer and appropriate plantings. Water passing through the filter layer will discharge to the riverbank via perforated under drains or during severe storm events via a manhole. It is estimated that this will require the transportation of approximately 185 cy of riprap materials to the Elm Street Area.

- Vegetated topsoil – The remaining portions of the Elm Street Area that are not subject to the restoration activities described above will be restored with a 4-inch

layer of vegetated topsoil. It is estimated that this will require the transportation of approximately 220 cy of clean materials to the Elm Street Area.

Mill Street Area Surface Restoration

- Vegetated topsoil – The portion of the Mill Street Area not subject to realignment of Mill Street will be restored with a 4-inch layer of vegetated topsoil. It is estimated that this will require the transportation of approximately 300 cy of clean materials to the Mill Street Area. (Note that GE has continued discussions with Guilford Transportation Industries, Inc., the owner of the railroad adjacent to the Mill Street Area, regarding the scope and performance of the Remedial Action on railroad property. As a result, the specific restoration activities associated with the railroad may be subject to change based on comments provided by Guilford. As such, for the purposes of this estimate, surface restoration of the railroad was included in this category based upon the area of excavation and an assumed 4-inch restoration layer.)

- Asphalt/concrete pavement – The Final Design Report indicates that an approximate 400-foot-long section of Mill Street will be removed during the Remedial Action and realigned following completion of the Remedial Action. As such, it is estimated that approximately 830 cy of pavement restoration materials will be required to restore the realigned portion of Mill Street.

General Site Restoration

As indicated in Section 2.2.1, approximately 30,205 cy of material will be excavated from the Elm and Mill Street Areas and sent off-site for disposal at permitted disposal facilities. The revised Final Design Report indicates that approximately 1,000 cy of material associated with the sand cap installed by the United States Environmental Protection Agency (EPA) over the footprint of the former building at the Elm Street Area will be segregated for use as backfill (assuming that the confirmation sampling required by the Verification Sampling Plan included as Appendix A of the revised Final Design Report indicates that this material is acceptable for use as subgrade backfill at the Elm Street Area). However, approximately 705 cy of material will be required to restore the riverbank per the Remedial Design (which requires a modified slope and gabions based on a slope stability analysis). Some of the sand cap materials could be used for this purpose. As a result, the Remedial Action Contractor will be required to import 29,910 cy of clean materials to maintain the pre-excavation surface grades at the Site, as modified by the riverbank restoration design. Since approximately 8,725 cy of clean materials will be required to perform the surface restoration activities specified above for the Elm and Mill Street Area, only 21,185 cy of clean, general fill materials

will be needed to maintain the pre-excavation surface grades at the Site. It is assumed that these materials will generally be transported to the Site using 20-cy trucks, requiring approximately 2,991 truck trips (i.e., 873 truck trips for the clean materials needed to perform the surface restoration activities, and 2,118 truck trips for the clean materials needed for general site restoration).

2.2.3 Summary

Based on the information provided in Section 2.2.2 above, it is currently estimated that the truck traffic associated with the implementation of the OSD soil remedy will require approximately 6,412 truck trips, all between the Site and off-site backfill sources or disposal facilities. As also indicated therein, this includes approximately 200 truck trips during the pre-mobilization phase (for the transportation and off-site disposal of the slurry materials associated with the installation of the SPTC walls) and 6,212 truck trips during full-scale remedy implementation (for the transportation and off-site disposal of materials excavated from the Elm and Mill Street Areas).

2.3 Truck Routes

The trucking routes for the transportation of clean materials to the Site and impacted materials from the Site will be performed using the same highways to/from Milford, New Hampshire. Since the impact to the highway traffic is considered negligible, this revised TR/TA Report focuses on the trucking routes within Milford and in the vicinity of the Site.

The Preliminary Traffic Report identified two routes from the Site to NH Route 101 (from which the trucks will travel to the applicable off-site disposal facilities) that would be utilized during the OSD soil remedy. Those two routes between the Elm Street Area and NH Route 101 were as follows:

- Elm Street to NH Route 101; or
- Elm Street to NH Route 13 to NH Route 101, with a reverse direction of NH Route 101 to NH Route 13 to Lincoln Street to Union Street to Garden Street to Cottage Street to Elm Street to avoid the downtown traffic circle.

The Preliminary Traffic Report identified two routes from the Mill Street Area to the Elm Street Area. Those two routes included the following:

- North on Cottage Street to Elm Street; or

- West on Mill Street to West Street to Elm Street.

From Elm Street, the trucks would follow one of the routes identified above between the Elm Street Area and NH Route 101.

Further detail and maps of the above-listed truck routes are provided on Figures E-1 and E-2. These figures also display the locations of two Truck Staging Areas, consisting of a Primary Staging Area located on Elm Street and an Overflow Staging Area located on Perry Road. Use of the latter staging area may not be required for implementation of the OSD soil remedy.

2.4 Overview of Impacts Associated with Remedy Implementation

This section provides an overview of the anticipated impacts to the proposed truck routes and properties adjacent to the Elm and Mill Street Areas associated with the truck traffic required to implement the OSD soil remedy, as described in Section 2.2.

2.4.1 Truck Routes

As indicated in Section 2.2.3, approximately 6,412 truck trips will be required on public roadways to implement the OSD soil remedy, all of which will be long distance trips entering and leaving Milford. Approximately 3,221 truck trips are associated with the off-site transportation of impacted materials to applicable off-site disposal facilities, while approximately 3,191 truck trips are associated with the transportation of clean backfill/surface restoration materials to the Site.

It is currently anticipated that inbound trucks will be routed to the Primary Staging Area identified on Figures E-1 and E-2. However, should additional truck staging capacity be required during implementation of the OSD soil remedy, GE anticipates the use of the Overflow Staging Area. The latter staging area was identified by the Town subsequent to the submittal of the *Preliminary (30%) Design Report for the LTTD Remedy* (Preliminary Design Report), along with another potential staging area located on Heron Pond Road. The Perry Road staging area and the Heron Pond Road staging areas were referred to as Staging Areas #1 and #2, respectively in the December 2007 draft Final Design Report. As further described below, the staging area on Heron Pond Road has since been eliminated in response to comments provided by the Town.

Subsequent to submittal of the draft Final Design Report on December 31, 2007, the Town identified a third property for use as the potential primary truck staging area: the former Milford Police Department property located on the north side of Elm Street to the west of the Site. Based on the identification of the former Milford Police

Department property, as well as comments received by EPA in its April 5, 2007 approval with modification letter for the Preliminary Design Report (regarding the proximity of a school to the staging area located on Heron Pond Road), and a further determination of the quantity of trucks required on a daily basis to implement the OSD soil remedy, it is currently anticipated that the former Milford Police Department property will be utilized as the Primary Staging Area for any trucks that do not travel directly to the Site, with the staging area located on Perry Road utilized as the Overflow Staging Area, if necessary. Finally, the Town indicated a preference that the staging area on Heron Pond Road not be used during implementation of the OSD soil remedy due to the proximity of the school to that staging area. In response to that request, and based on the availability of the primary truck staging area located directly on Elm Street, the use of the staging area on Heron Pond Road has been eliminated. Since the two remaining staging Areas (i.e., the Primary Staging Area and Overflow Staging Area) are located along the travel route to the Site (i.e., between NH Route 101 and the Site), the routing of the trucks to the staging area(s) and from the staging area(s) to the Site is considered a part of the inbound leg for trucks traveling to the Site.

As indicated later in this section, it is currently estimated that approximately 56 truck trips per day will be required to implement the OSD soil remedy. Since this includes both the inbound and outbound legs of the trip (i.e., one truck makes both an inbound and outbound truck trip to/from the Site), it can be concluded that implementation of the OSD soil remedy will require approximately 28 trucks visiting the Site each working day. The Remedial Action Contractor will be responsible for phasing the arrival of the trucks to the Site for either loading of impacted materials for off-site disposal or off-loading clean backfill materials for site restoration. As a result, it is anticipated that the approximately 28 trucks traveling to the Site will be phased to arrive at the Site over the course of a 10 hour work day (which includes 8 hours of active trucking operations). Therefore, staging of 28 trucks at any one time will not be required. Instead, it is anticipated that the Primary Staging Area, which is approximately 2.5 acres, including approximately 14,300 square feet of pavement, is sufficiently large to stage 12 to 16 trucks, with another five or six trucks staged on-site (split between Mill Street and the portion of Keyes Drive adjacent to the Elm Street Area) for material loading/off-loading activities. Therefore, by phasing the arrival of trucks throughout the construction day, it is anticipated that the Primary Staging Area is sufficiently large to accommodate any trucks that need to be staged prior to traveling to the Site and that use of the Overflow Staging Area may not be required to implement the OSD soil remedy. In preparation for using the former Milford Police Department property as the Primary Staging Area, ARCADIS visited the property and determined that certain modifications will be necessary prior to use as the Primary Staging Area. Those modifications are presented on Figure E-3. In addition, although use of the Overflow Staging Area may not be required to implement the OSD soil remedy, ARCADIS visited that property and

determined that certain modifications would be necessary prior to use as the Overflow Staging Area. Those modifications are presented on Figure E-4. Finally, it should be noted that trucks leaving the Site will travel directly to the appropriate off-site locations (i.e., disposal facility/clean fill source). These trucks will not return to the Primary Staging Area or, if used, the Overflow Staging Area, so no capacity is required at either staging area to stage outbound trucks.

Section 4 of the revised Final Design Report for the OSD soil remedy indicates that the excavation and transportation of the impacted materials at the Elm and Mill Street Areas will be performed in two phases. In general, the excavation activities at both areas will generally proceed from the deeper excavations to the shallower excavations. More specifically, it is anticipated that the excavation activities at the Elm Street Area will proceed from the deeper excavations located in the northeast corner and central portions of the property (Phase 1 – 16,285 cy, which includes approximately 825 cy of material excavated for the soil cover, replacement storm sewer, gabion wall and excavation sloping) to the shallower excavations located along Keyes Drive and Elm Street (Phase 2 – 8,115 cy, which includes approximately 2,325 cy of material excavated for the soil cover, replacement storm sewer, storm water retention area, gabion wall and excavation sloping), as shown on Figures D-1 and D-2 (included in Appendix D to the revised Final Design Report). Similarly, it is anticipated that the excavation activities at the Mill Street Area will proceed from the deeper excavations in the central portion of the property (Phase 1 – 8,600 cy, which includes approximately 700 cy of material associated with excavation sloping) to the shallower excavations located along the western and eastern portions of the property (Phase 2 – 1,305 cy, which includes 250 cy of material associated with excavation sloping), as shown on Figures D-3 and D-4 (included in Appendix D to the revised Final Design Report). As previously indicated, the above totals exclude approximately 2,000 cy of slurry material associated with the installation of the SPTC walls as that materials will be transported off-site during the pre-mobilization phase of the project and prior to the initiation of the full-scale excavation activities during the construction phase of the project.

The Project Construction Schedule provided in Appendix G of the revised Final Design Report indicates that the concurrent excavation activities for the Phase 1 excavations at the Elm and Mill Street Areas (approximately 24,885 cy) would be performed over a period of approximately 64 working days (i.e., intrusive activities will be performed 12 hours a day, 6 days a week). Further, the Phase 2 excavations at the Elm and Mill Street Areas (approximately 9,420 cy) would be performed over a period of approximately 32 working days. As also shown on that schedule, the backfilling activities would generally be performed concurrently with the excavation activities at the Site, but lagging behind such excavation activities to accommodate verification of the limits of removal. Specifically, the limits of soil removal for each excavation area

will be surveyed to verify achievement of the required excavation limits to achieve the soil cleanup levels (SCLs) specified in the ROD (as amended) for OU-1. Additionally, confirmation sampling will be required in many completed excavations prior to backfill materials being placed in those excavations. In total, it is estimated that the concurrent excavation and off-site disposal activities at the Elm and Mill Street Areas will be performed over a period of approximately 112 work days, or 130 calendar days. These estimated durations assume that the excavation and transportation activities will be performed to provide sufficient materials to maintain an excavation production rate of approximately 420 tons (i.e., 300 cy) per day. Based on the information provided above, it is assumed that approximately 6,212 truck trips will be spread evenly over 112 days for a total of approximately 56 truck trips per day between the Site and the off-site sources of clean materials and off-site disposal facilities.

Based on the traffic counts taken at the intersection of Elm Street and West Street (approximate average daily traffic [ADT] of 15,250), the addition of 56 trips per day would represent an increase of approximately 0.37% of traffic during any given day. It is not anticipated that this will represent a substantial impact to the overall intersection. This conclusion is supported by the detailed capacity analysis that was performed for the public roads adjacent to the Site and the staging areas as part of the final design of the OSD soil remedy, as further described in Section 3. As discussed therein, the capacity analysis was combined with the traffic data collected for the roads in the vicinity of the Site (provided in Attachments A through D of this report) to develop a detailed evaluation of potential impacts associated with the implementation of the OSD soil remedy and support an evaluation of the need for measures to mitigate such impacts.

2.4.2 Adjacent Properties

During implementation of the OSD soil remedy at the Elm and Mill Street Areas, the normal traffic and pedestrian patterns associated with Elm Street and Mill Street is expected to be impacted. It is anticipated that one lane of Elm Street will have to close for a limited duration to facilitate excavation of soils and the replacement of the portion of the storm sewer utility under Cottage Street and Elm Street as described in Section 3.7 of the revised Final Design Report. As indicated in the revised Final Design Report, the Remedial Action will be performed in such a manner that the northern (i.e., west-bound) lane of Elm Street will not be closed concurrently with Mill Street. When the northern lane of Elm Street is closed, two-way traffic on Elm Street will be maintained utilizing one lane with traffic being maintained by flaggers or temporary signals. Pedestrians on Elm Street will be re-routed to the opposite (i.e., south) side of the street both east and west of the work area at adjacent intersections. Mill Street traffic will be detoured during excavation, backfilling and restoration of the Mill Street

Area (including reconstruction/realignment of Mill Street). For additional information on the above-referenced maintenance of traffic plans, see Technical Drawings T-1 to T-5, which are included in Appendix B of the revised Final Design Report.

The adjacent properties that may be impacted the greatest during the remedy are Keyes Field (Parcel 25-133) and the business/residence adjacent to the Elm Street Area (Parcel 25-11), as well as the four residences on Mill Street located immediately across the street from the Mill Street Area (Parcels 25-93, 25-93A, 25-94, and 25-109). The business at Parcel 25-11 is accessed directly from Elm Street, and will not be impacted. The revised Final Design Report contains provisions for construction of an alternate access/parking area for Keyes Park, providing access to the park through the former Permattach property (see Technical Drawing G-5B in Appendix B of the revised Final Design Report). The revised Final Design Report also includes provisions for maintaining access to residences at Parcels 25-11 and 25-109, and for providing alternate and/or temporary access to the residences at Parcels 25-93, 25-93A, and 25-94 (see Technical Drawing G-6C in Appendix B of the revised Final Design Report).

Properties located along the truck routes may experience some minor impact as the trucks pass by. The impacts are expected to include engine and tire noise, engine exhaust emissions and visual impacts of large dump trucks. These impacts are not considered significant since the anticipated truck volume is low (approximately 56 truck trips per day or approximately 7 truck trips per hour).

3. Recommendations and Analysis

This section provides: a recommendation of the truck routes to and from the Site; capacity analyses determining the levels of service and impact to those levels for significant intersections along the truck routes; a description of the potential impacts to the roadways and properties adjacent to the Site; and an evaluation of the need for measures to mitigate potential impacts created by the implementation of the OSD soil remedy at the Elm and Mill Street Areas.

3.1 Truck Route Recommendations

As indicated in Section 2.3, the Preliminary Traffic Report included in Attachment A identified primary and secondary haul routes depicted for each site and the original two staging areas (which now represent the Overflow Staging Area and the former Contingent Overflow Staging Area, the latter of which has now been eliminated). In letters dated May 15 and October 31, 2007, the Town provided comments on the truck routes presented in the Preliminary Design Report and the Intermediate OSD Design Report. Those comments indicated the Town's desire that the "Oval" located in the center of town be excluded from any trucking routes used for the implementation of the OSD soil remedy. As indicated in Section 2.3, one of the routes from the Elm Street Area included travel east on Elm Street to the Oval, turning south on Route 13.

In response to the Town's comments, the truck route through the Oval and the staging area located on Heron Pond Road were eliminated from further consideration. Also, as indicated in Section 2.4.1, a new Primary Staging Area was identified at the location of the former Milford Police Department on Elm Street to the west of the Site, which should be sufficient to handle the truck queues associated with implementation of the OSD soil remedy. Therefore, use of the staging area located on Perry Road (Overflow Staging Area) may not be necessary to implement the OSD soil remedy. In summary, the recommended routes from/to the Site and to/from the Primary Staging Area are as follows (see Figures E-1 and E-2):

- From the Elm Street Area - Exit the Elm Street Area traveling west on Elm Street, turning east on NH Route 101;

- From the Mill Street Area - Exit the Mill Street Area traveling west on Mill Street, turning north on West Street, turning west on Elm Street, turning east on NH Route 101;

- To the Elm Street Area - Traveling west on NH Route 101, turning east on Elm Street, turning north into the Elm Street Area;

- To the Mill Street Area - Traveling west on NH Route 101, turning east on Elm Street, turning south on West Street, turning east on Mill Street to the Mill Street Area;

- To the Primary Staging Area - Trucks would follow the above two routes, stopping at the former Milford Police Department property located on Elm Street on their way to the Site (as previously indicated, the Primary Staging Area will only be used for trucks inbound to the Site);

- To the Elm Street Area from the Primary Staging Area - Traveling east on Elm Street, turning north into the Elm Street Area; and

- To the Mill Street Area from the Primary Staging Area - Traveling east on Elm Street, turning south on West Street, turning east on Mill Street to the Mill Street Area.

3.2 Capacity Analysis

To measure the impact associated with implementing the OSD soil remedy on the existing vehicular traffic in the vicinity of the Site, capacity analyses were performed in the December 2007 draft Final Design Report for key intersections along the truck routes utilizing the computer program Synchro under both estimated existing and projected Remedial Action conditions (assuming a construction start date in 2009). As indicated in Section 2.4.1, the addition of 56 trips per day would represent an increase of only approximately 0.37% of traffic during any given day at the East Street and West Street intersection (which is on the primary truck route), as compared to an estimated increase of 0.34%, as specified in the TR/TA Report provided in Appendix E of the December 2007 draft Final Design Report. As further described below, the evaluation presented therein indicated that the implementation of the Remedial Action was expected to have negligible impact to the areas surrounding the truck routes. Since the estimated increase in traffic associated with the revised Final Design Report is only 0.03% greater than the estimates provide in the December 2007 draft Final Design Report, the 2009 projections were maintained for this report.

Capacity analyses take into consideration a number of variables in determining delay such as vehicle volume, lane width, number of lanes, vertical grades, signal timing, signal phasing, traffic control, turn lane lengths, and other geometric information. The analyses measured the actual impact in terms of level of service (LOS) at the key intersections. LOS is a measure of delay of the intersection in seconds (sec). Below is a table of the LOS and the delay in seconds for each level, with LOS A being the best in terms of delay and LOS F being the worst in terms of delay.

Table 1 – Levels of Service

LOS	Signalized Intersection	Unsignalized Intersection
A	≤10 sec	≤10 sec
B	10-20 sec	10-15 sec
C	20-35 sec	15-25 sec
D	35-55 sec	25-35 sec
E	55-80 sec	35-50 sec
F	≥80 sec	≥50 sec

Capacity analyses were performed for the four major intersections located along the recommended truck routes that would be impacted by implementation of the OSD soil remedy, including: Mill/Knight Street and West Street; Elm Street and West Street; Elm Street and Old Wilton Road; and Elm Street and NH Route 101. The assumptions for the capacity analyses were that trucks would be traveling to both the Elm and Mill Street Areas concurrently. The analyses were performed for the peak hours identified for weekday mornings, weekday afternoons/evenings, and Saturday midday, as determined through a review of the traffic counts obtained in 2006 during the preliminary design phase (see Attachment C). The existing counts were projected to 2009, which was the anticipated year during which the OSD soil remedy would be implemented, utilizing the existing count information that is located in Attachment D.

This revised Final Design Report estimates that a total of 6,212 truck trips will be needed over a 112-day period during the implementation of the OSD soil remedy. Based on an 8-hour day, this represents approximately 56 truck trips per day, or a total of approximately 7 trips per hour to/from the Site. The truck trips associated with remedy implementation were distributed along the haul routes per the traffic split diagram located in Attachment D. All of the existing and projected Remedial Action traffic counts are summarized in tables and charts located in Attachments B through E.

Tables 2 and 3 below summarize the results of the capacity analyses that were completed for the signalized (Table 2) and unsignalized (Table 3) intersections located along the truck routes between NH Route 101 and the Site. Capacity analyses were also performed for the intersection of Elm Street and Old Wilton Road for trucks utilizing the Overflow Staging Area; however, that capacity analysis is also relevant to the Primary Staging Area. As a conservative measure, the analysis for this intersection was completed assuming five vehicles per hour were traveling to/from the staging area (even though it is not anticipated that the staging area will be needed for each of the 28 trucks traveling to/from the Site on a daily basis, as described in Section 2.4.1). Due to

the low hourly volume of truck trips, there is not a significant change in the delay of any intersection and the expected impact to the haul routes will be negligible.

Table 2 - Delay in Seconds/Level of Service at Signalized Intersections

Intersection	Projected LOS Non-Construction Conditions			Projected LOS Construction Conditions		
	AM	PM	SAT	AM	PM	SAT
Elm Street/NH Route 101	26.0/C	46.9/D	20.7/C	26.4/C	46.9/D	21.2/C
Elm Street/West Street	13.7/B	14.1/B	10.7/B	13.8/B	14.1/B	10.8/B

Table 3 - Delay in Seconds/Level of Service at Unsignalized Intersections

Stopped Approach	Intersecting Street	Projected LOS Non-Construction Conditions			Projected LOS Construction Conditions		
		AM	PM	SAT	AM	PM	SAT
Old Wilton Road NEB	Elm Street	12.6/B	11.8/B	12.9/B	12.7/B	11.9/B	13.0/B
Knight Street EB	West Street	13.2/B	10.9/B	11.3/B	13.3/B	11.0/B	11.3/B
Knight Street WB	West Street	15.1/C	10.9/B	10.7/B	15.1/C	10.9/B	10.7/B

As indicated in the tables above and documented in the capacity analyses located in Attachment E, none of the evaluated intersections will have a significant decrease in LOS during implementation of the OSD soil remedy due to trucks traveling to/from the Site and/or NH Route 101. The complete capacity analyses for the projected existing and Remedial Action conditions during workday morning, workday afternoon/evening and Saturday midday peak hours can be found in Attachment E.

3.3 Impact Summary

The overall impact associated with implementation of the OSD soil remedy to the areas surrounding the truck routes would be negligible. This conclusion is based on the minimal delay differences in the capacity analyses, the minimal truck volumes per hour associated with remedy implementation, the truck routes being located primarily on major thoroughfares and the minimal residential areas adjacent to the haul routes.

All of the intersections that were analyzed will operate at a LOS of B or C except the workday afternoon/evening peak hour at the intersection of Elm Street and NH Route 101 which is projected to have a LOS of D under non-construction conditions.

However, by optimizing the times of the signal phases, the Elm Street/NH Route 101 intersection delay could be reduced from 46.9 seconds (a LOS of D) to 29.8 seconds (a LOS of C) under non-construction conditions. Most importantly, the projected LOS at each intersection under projected construction conditions all fall within the same category as the projected LOS under non-construction conditions. Therefore, implementation of the OSD soil remedy is expected to have negligible impact on the LOS at the intersections along the truck routes.

Elm Street roadway work is expected to have an impact on pedestrians and the motoring public when the crossing near Keyes Drive is closed and two-way traffic is maintained in one lane. Mill Street roadway work is expected to have an impact on the motoring public and residential access when the detour of Mill Street is in effect. As a result, a maintenance of traffic plan has been developed to mitigate these expected impacts. Please refer to the T-series of Technical Drawings located in Appendix B of the Final Design Report for the maintenance of traffic plan.

3.4 Impact Mitigation Recommendations

No mitigation is required along any of the truck routes since implementation of the OSD soil remedy will not impact the LOS at any of the intersections along the truck routes, as indicated in Section 3.3. Regarding impacts to adjacent roadways associated with remedy implementation, the Final Design Report indicates that the excavation work proposed for Mill Street and the northern (i.e., west-bound) lane of Elm Street will not be performed concurrently. Further, the Elm Street roadway work shall be in accordance with the T-series of Technical Drawings located in Appendix B of the revised Final Design Report and, to the extent practicable, will be performed during a period of time that minimizes the inconvenience to pedestrians and motoring public. The Mill Street detour shall also be completed per the T-series of Technical Drawings. In addition, the Remedial Design includes the possible phasing of the Mill Street Remedial Action such that access to the adjacent residences might be minimized, while provisions have also been made for alternate access to those residences. In summary, the overall impacts to vehicular and pedestrian traffic in the vicinity of the Site are considered minimal since the impacts associated with implementation of the OSD soil remedy are typical for projects of this size and the impact to the roadway network and traffic flows from the truck traffic associated with the implementation of the OSD soil remedy is negligible.

Figures

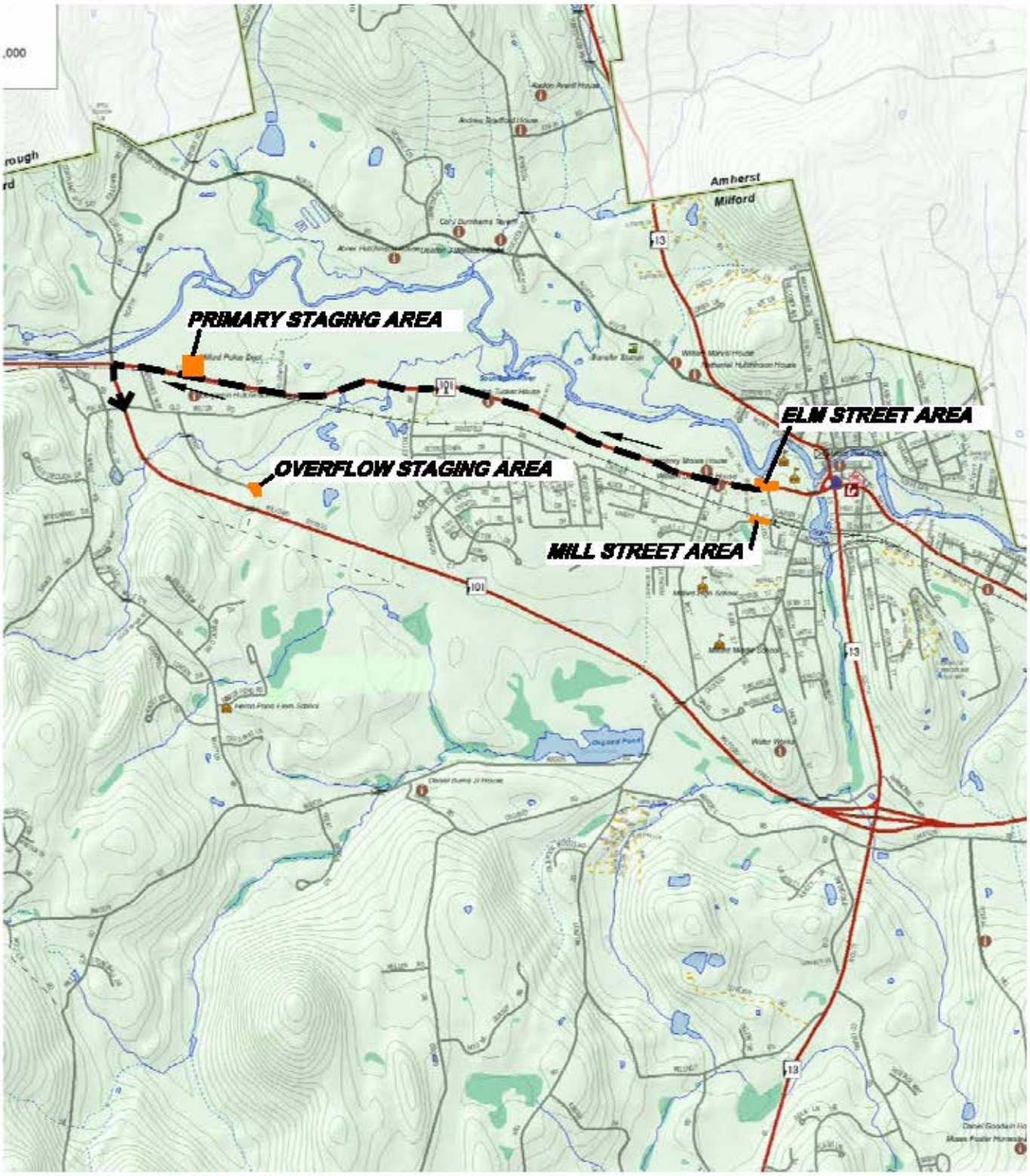

DRAFT
FOR EPA REVIEW

NOTE:

1. TRUCK ROUTE AND TRAFFIC ANALYSIS PRELIMINARY REPORT DEVELOPED BY VANASSE HANGEN BRUSTLIN, INC. DATED MAY 10, 2006.

GENERAL ELECTRIC COMPANY
FLETCHER'S PAINT WORKS AND STORAGE FACILITY
SUPERFUND SITE - MILFORD, NEW HAMPSHIRE
FINAL (100%) DESIGN REPORT

PRIMARY TRUCK ROUTE - ELM STREET AREA TO NH ROUTE 101 EAST

ARCADIS

FIGURE
E-1

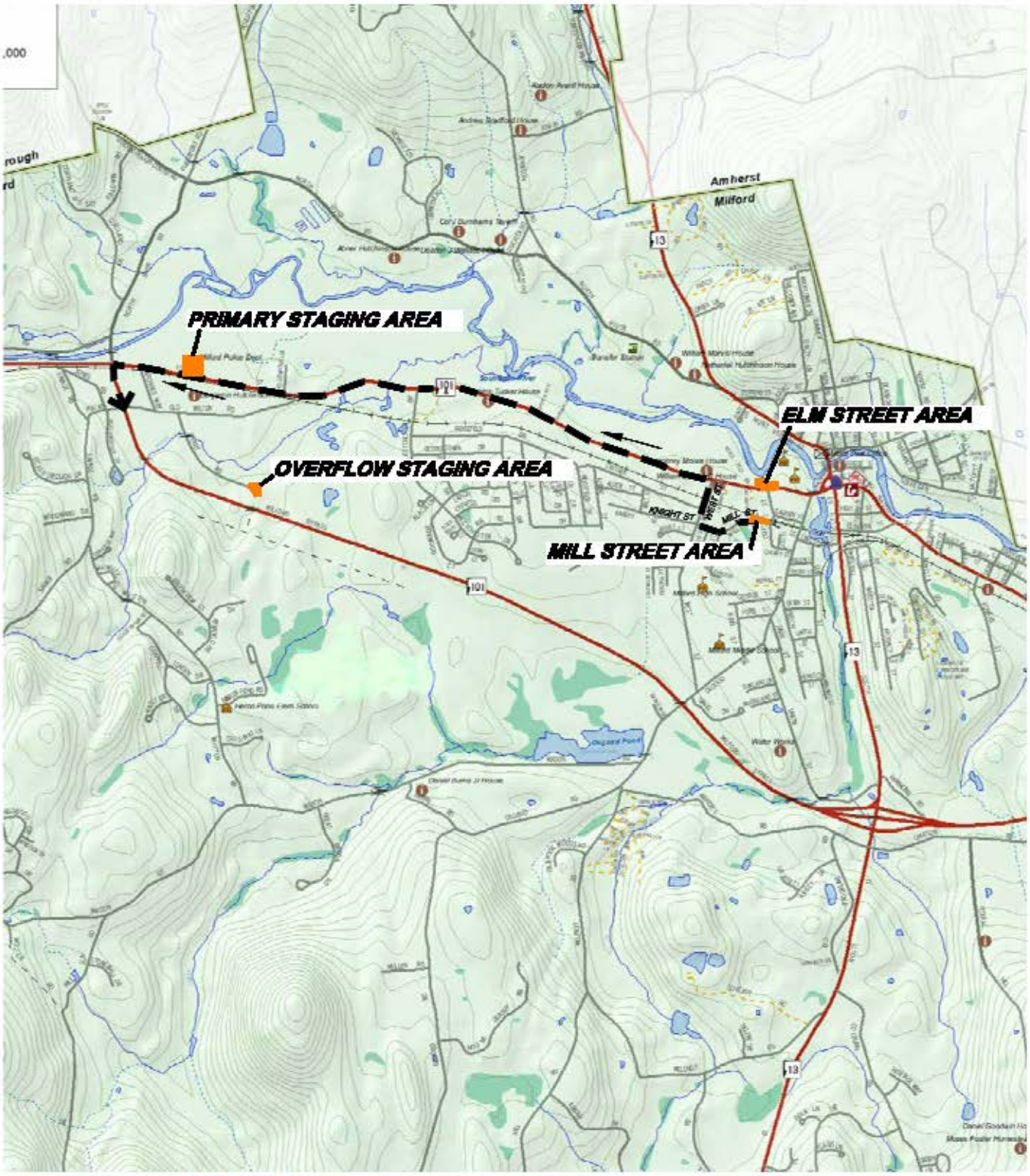

DRAFT
FOR EPA REVIEW

NOTE:

1. TRUCK ROUTE AND TRAFFIC ANALYSIS PRELIMINARY REPORT DEVELOPED BY VANASSE HANGEN BRUSTLIN, INC. DATED MAY 10, 2006.

GENERAL ELECTRIC COMPANY
FLETCHER'S PAINT WORKS AND STORAGE FACILITY
SUPERFUND SITE - MILFORD, NEW HAMPSHIRE
FINAL (100%) DESIGN REPORT

PRIMARY TRUCK ROUTE - MILL STREET AREA TO NH ROUTE 101 EAST

ARCADIS

FIGURE
E-2

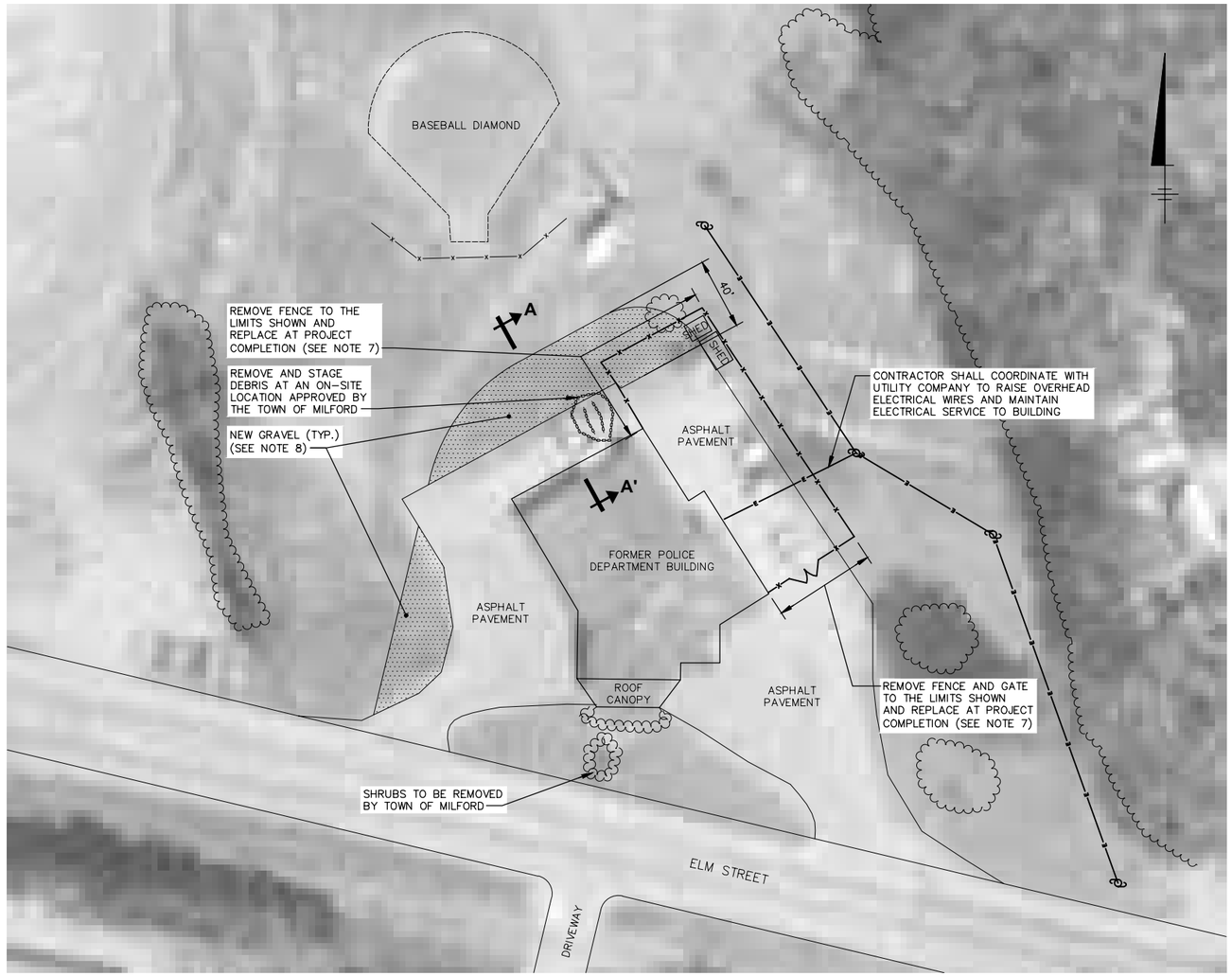

PLAN

0 40' 80'

SCALE: 1"=40'

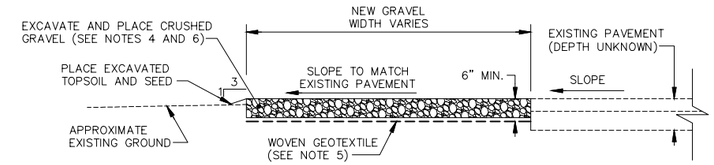

SECTION A-A'

NOT TO SCALE

LEGEND:

- CHAIN LINK FENCE
- EDGE OF PAVEMENT
- OVERHEAD ELECTRICAL
- UTILITY POLE
- NEW GRAVEL

NOTES:

1. REFER TO DRAWINGS G-1 AND G-2 (APPENDIX B) FOR GENERAL NOTES PERTAINING TO CONTRACT REQUIREMENTS AND SITE INFORMATION.
2. BASE MAP FEATURES ARE BASED ON BEST AVAILABLE AERIAL PHOTOGRAPHY AND SITE PHOTOS. ALL LOCATIONS SHOWN ON THIS DRAWING ARE APPROXIMATE. THE CONTRACTOR SHALL FIELD VERIFY LOCATIONS AND DIMENSIONS SHOWN PRIOR TO COMMENCING WITH THE WORK.
3. A PRE-CONSTRUCTION SURVEY OF THE PROPERTY SHALL BE PERFORMED BY THE CONTRACTOR TO DOCUMENT THE EXISTING CONDITION OF THE PROPERTY AND TO FACILITATE PROPERTY RESTORATION AT THE COMPLETION OF THE PROJECT. THE SURVEY IS TO INCLUDE PHOTOGRAPHS AND FIELD MEASUREMENTS AS NEEDED TO ADEQUATELY ESTABLISH EXISTING SITE CONDITIONS.
4. CONTRACTOR SHALL STAGE EXCAVATED SOILS AT AN APPROVED LOCATION FOR REUSE/RESTORATION AT END OF PROJECT.
5. WOVEN GEOTEXTILE SHALL BE GEOTEX 315ST (AS MANUFACTURED BY PROPEX) OR AN APPROVED EQUAL.
6. CRUSHED GRAVEL SHALL CONSIST OF CLEAN, HARD CRUSHED GRAVEL AND MEET THE REQUIREMENTS OF NHDOT STANDARD SPECIFICATIONS SECTION 304. CRUSHED GRAVEL SHALL BE PLACED IN A SINGLE 6 INCH THICK LIFT AND COMPACTED TO MINIMUM 95 PERCENT MAXIMUM DENSITY.
7. FENCE POST HOLES WITHIN PAVEMENT AREAS SHALL BE FILLED TO GRADE WITH CRUSHED GRAVEL.
8. NEW GRAVEL WIDENING AREAS SHALL BE REMOVED AND RESTORED AT PROJECT COMPLETION IN ACCORDANCE WITH SECTION 02208 OF THE CONTRACT SPECIFICATIONS.

DRAFT
FOR EPA REVIEW

GENERAL ELECTRIC COMPANY
FLETCHER'S PAINT WORKS AND STORAGE FACILITY
SUPERFUND SITE - MILFORD, NEW HAMPSHIRE
FINAL (100%) DESIGN REPORT

PRIMARY TRUCK STAGING AREA SITE MODIFICATIONS

ARCADIS

FIGURE
E-3

CITY: SYRACUSE-NY DIV/GROUP: 141/ENV DB: B.PITTSLEY G.STOWELL, K.SARTORI PIC:(Opt) PM:(Reqd) TM:(Opt) LYR:(Opt)ON=*;OFF=REF
V:\ENVCAD\SYRACUSE\ACT\CIB\0020985\0002\00006\DWG\REPORT\FINAL\20985GE3.dwg LAYOUT: E-3 SAVED: 11/8/2012 9:50 AM ACADVER: 18.1S (LMS TECH) PAGESETUP: ---- PLOTSTYLETABLE: PLTFULL.CTB PLOTTED: 11/8/2012 9:50 AM BY: SARTORI, KATHERINE
XREFS: 20985X00 20985X01 IMAGES: 20985X01.JPG PROJECTNAME: ----

PLAN

0 60' 120'

SCALE: 1"=60'

LEGEND:

- GATE
- EDGE OF PAVEMENT
- EDGE OF GRAVEL ROAD
- OVERHEAD ELECTRICAL
- UTILITY POLE
- EXISTING TREE LINE
- EXISTING DEBRIS/BERM

NOTES:

1. REFER TO DRAWINGS G-1 AND G-2 (APPENDIX B) FOR GENERAL NOTES PERTAINING TO CONTRACT REQUIREMENTS AND SITE INFORMATION.
2. BASE MAP FEATURES ARE BASED ON BEST AVAILABLE AERIAL PHOTOGRAPHY AND SITE PHOTOS. ALL LOCATIONS SHOWN ON THIS DRAWING ARE APPROXIMATE. THE CONTRACTOR SHALL FIELD VERIFY LOCATIONS SHOWN PRIOR TO COMMENCING WITH THE WORK.
3. CONTRACTOR SHALL FILL HOLES/RUTS AND GRADE GRAVEL ROAD AND TURNAROUND TO ACCOMMODATE TRUCK TRAFFIC.
4. CONTRACTOR SHALL STAGE DEBRIS/BERM MATERIALS AT AN APPROVED LOCATION FOR REUSE/RESTORATION AT END OF PROJECT.

DRAFT
FOR EPA REVIEW

GENERAL ELECTRIC COMPANY
FLETCHER'S PAINT WORKS AND STORAGE FACILITY
SUPERFUND SITE - MILFORD, NEW HAMPSHIRE
FINAL (100%) DESIGN REPORT

OVERFLOW TRUCK STAGING AREA SITE MODIFICATIONS

ARCADIS

FIGURE
E-4

CITY: SYRACUSE-NY DIV/GROUP: 141/ENV DB: B.PITTSLEY, K.SARTORI PIC:(Opt) PM:(Reqd) TM:(Opt) LYR:(Opt)ON=*;OFF=*REF*
V:\ENVCAD\SYRACUSE\ACT\CB0020985\0002\00006\DWG\REPORT\FINAL\20985GE4.dwg LAYOUT: E-4 SAVED: 11/8/2012 9:44 AM ACADVER: 18.1S (LMS TECH) PAGESETUP: ---- PLOTSTYLETABLE: PLTFULL.CTB PLOTTED: 11/8/2012 9:51 AM BY: SARTORI, KATHERINE
XREFS: 20985X00 20985X02 IMAGES: 20985X02.jpg PROJECTNAME: ----

Attachments

Attachment A

Preliminary Traffic Report

`

Transportation
Land Development
Environmental
S e r v i c e s

Vanasse Hangen Brustlin, Inc.

Six Bedford Farms, Suite 607
Bedford, New Hampshire 03110-6532
603 644-0888
FAX 603 644-2385

Memorandum

To: Mr. Corey Averill
Blasland, Bouck & Lee, Inc.
6723 Towpath Road, Box 66
Syracuse, NY 13214-0066

Date: May 10, 2006

Project No.: 51784.00

From: Mark Suennen, P.E.
Project Engineer

Re: Truck Route and Traffic Analysis,
Preliminary Report
Fletcher's Paint Works and Storage Facility Superfund Site
Milford, New Hampshire

Vanasse Hangen Brustlin, Inc. (VHB) has been retained to assist Blasland, Bouck & Lee, Inc. (BBL) with transportation engineering services associated with the environmental clean-up of the Fletcher's Paint Works & Storage Facility Superfund Site (the Site) in Milford, NH. This preliminary report documents our initial findings with regard to the identification of truck routes through the Town of Milford for two potential remedial alternatives: the Low Temperature Thermal Desorption (LTTD) Remedy specified in EPA's Record of Decision (ROD) for the Site and the alternate Off-Site Disposal (OSD) Remedy. In addition, two nearby sites have been tentatively identified within the Town of Milford for consideration as off-site staging areas (as necessary) for transportation vehicles utilized during implementation of either remedy. For the purpose of this study, it has been assumed that all transportation vehicles traveling to and from the Site will utilize state and/or interstate highways. Therefore, this study focused on transportation routes for truck trips to/from NH Route 101.

BBL's Request for Proposal calls for the inventory of 14 truck route alternatives for access between the Elm Street and Mill Street areas, the off-site staging areas, and Route NH 101. These 14 routes, which include a primary and secondary route for each origin-destination pair, are detailed as follows:

- Two routes for in-town transportation between the Elm Street area and the Mill Street area;
- Two routes to/from the Elm Street area and Staging Area #1;
- Two routes to/from the Mill Street area and Staging Area #1;
- Two routes to/from the Elm Street area and Staging Area #2;
- Two routes to/from the Mill Street area and Staging Area #2;
- Two routes to/from the Elm Street area and NH Route 101; and
- Two routes to/from the Mill Street area and NH Route 101.

It should be noted that the designations primary and secondary provided in this document are for reference purposes only within this document and are only intended to identify potential transportation routes that could be utilized during implementation of the Remedial Action.
This preliminary report provides the following:

- A description of the existing roadway network in the vicinity of the Site;
- An evaluation of two potential off-site staging area for transportation vehicles used to implement the remedy;
- Information regarding federal, state and local permitting requirements for the transportation of hazardous materials and hazardous waste on public roadways;
- A description of the primary and secondary truck routes between the Elm Street Area and the Mill Street Area;
- A description of the primary and secondary truck routes between the Elm Street and Mill Street Areas and the off-site staging areas;
- A description of the primary and secondary truck routes between the Elm Street and Mill Street Areas and NH Route 101; and
- Potential vehicular and pedestrian detour plans for closures of Elm Street and Mill Street adjacent to the remediation areas.

EXISTING CONDITIONS

The Town of Milford, located in southern New Hampshire, has a population of approximately 13,535 (2000 Census). The Elm Street and Mill Street Areas are located approximately 1,200 feet west of the central business district. The state highway network near Milford consists of three highways: NH Route 101, the major east-west route in southern New Hampshire, which bypasses the downtown area to the south; NH Route 101A, a local arterial that intersects NH Route 101 east and west of the downtown area and passes through the center of the downtown area; and NH Route 13, a north-south highway that intersects NH Route 101A in the downtown area and intersects NH Route 101 south of the downtown area. NH Route 101A is signed for No Thru Trucks at both its eastern and western intersections with NH Route 101. A map showing the relationship of the two sites to the local road network is shown in Figure 1.

Elm Street Area

Elm Street, also known as NH Route 101A, is an east-west state highway that passes through the center of town with an average daily traffic (ADT) of 16,300 vehicles per day near the Elm Street Area. Elm Street is a two lane undivided roadway with a speed limit of 30 MPH. The lanes are of variable width from 16 feet to 22 feet. There is sidewalk on both sides of Elm Street with crosswalks at the east leg of the intersection at Cottage Street and at the west leg of the intersection at Keyes Field Road. The Elm Street Area is bounded by Elm Street to the south, Keyes Field Road to the west, the Souhegan River to the northwest, a cemetery to the northeast, and the Milford Korean War Memorial Wall and Cemetery to the east. Keyes Field Road leads to a large public park with baseball diamonds, tennis courts, playground equipment, and a public swimming pool.

Mill Street Area

Mill Street is an east-west street that parallels the Boston-Maine (B&M) rail line south of Elm Street. Mill Street is a two lane undivided roadway with a speed limit of 25 MPH. The lanes are 11 feet wide with variable width shoulders ranging from 0 to 2 feet. There is no sidewalk adjacent to Mill Street throughout its length from Johnson Street to Cottage Street. The Mill Street Area is bounded

by Mill Street to the south, a private residence and open paved parking area to the west, the B&M rail line to the north and Cottage Street to the east.

Railroad Line – Guilford Transportation Industries

The B&M rail line that forms the northern border of the Mill Street site is owned and operated by Guilford Transportation Industries. Guilford Transportation Industries was contacted for information regarding regularity of service and schedules along the Milford portion of the B&M rail line. The best information available at this time is that trains run 2-20 times per week on an as-needed basis. There is no set schedule for operations. Trains are operated on demand for bulk material customers such as rock quarries, coal mining and industrial manufacturing. Work within or adjacent to the railroad rights of way may require the use of a flagman and temporary work stoppages during the train's passage. Further information on traffic controls required during construction will be provided by Guilford Transportation Industries and will be included in the final report.

Off-Site Staging Area #1

The first off-site staging area is located near the end of Perry Road, north of the NH Route 101 overpass. A map of the site location is shown in Figure 2. The site is a gravel, level, open space that is triangular in shape and approximately 0.32 acres. The site has two access points along Perry Road and has overhead electric service in the northeast corner. Perry Road is a north-south paved two lane, 36 foot wide roadway that changes to a gravel road approximately halfway between Old Wilton Road and the proposed staging area. The speed limit on the paved section is 25 MPH. The gravel road is moderately rough with numerous shallow holes. Access to Perry Road is via Old Wilton Road.

Off-Site Staging Area #2

The second staging area is located at the east end of Heron Pond Road. A map of the site location can be found at Figure 2. The site is a gravel, level, open space that appears to be a gravel pit. The site is roughly circular in shape and approximately 25 acres. The site has one access point along Heron Pond Road. The access point is located approximately 250 feet from the entrance to an elementary school, although the school is not adjacent to Heron Pond Road. Heron Pond Road is an east-west two lane roadway with a speed limit of 25 MPH. The lanes are 12 feet wide with no shoulders and with a sidewalk along the north side of the road.

EVALUATION OF STAGING AREAS

Staging Area #1 is the closer site to the Elm Street and Mill Street Areas; however, Staging Area #2 is the larger of the two sites. Both sites are relatively private with few residential or commercial properties adjacent. The roadway network to access Staging Area #1 consists of a state highway through a commercial area and local roads though light industrial areas. Perry Road, the gravel road leading to Staging Area #1, may need to be repaired prior to and after the proposed use. The roadway network to access Staging Area #2 consists of local roads through residential neighborhoods and some commercial areas. Heron Pond Road would provide direct access to Staging Area #2 and is a relatively new roadway in good physical condition.

TRANSPORTATION OF HAZARDOUS MATERIALS

The transportation of hazardous materials (HAZMAT) and hazardous wastes in the state of New Hampshire is regulated by the New Hampshire Department of Environmental Services (NHDES) and the New Hampshire Department of Safety (NHDOS). The applicable regulations regarding the transportation of HAZMAT in New Hampshire are contained in Chapter Saf-C 600 titled Hazardous Materials Transportation Rules New Hampshire Department of Safety. The statutory authority for the regulation of HAZMAT is contained in the New Hampshire Revised Statutes Annotated (RSA) Title 21-P:14, II(a). In general, the regulation states that New Hampshire follows all federal mandates and regulations, with copies of documentation to be provided to the NHDOS concurrently with federal submissions.

Federal regulations regarding the transport of HAZMAT are contained in Title 49, Parts 100-185 of the Code of Federal Regulations (CFR). Part 107 discusses the procedures, agencies and personnel with regulatory authority pertaining to the transport of HAZMAT in the United States. Part 172 lists and classifies materials designated as hazardous for the purpose of transportation. Part 172 also includes requirements for marking, labeling, shipping documents and placarding shipments of HAZMAT. Title 49 also authorizes the US Department of Transportation (USDOT) to regulate the transportation of HAZMAT in accordance with the Hazardous Materials Transportation Act (HMTA). The Secretary of USDOT has delegated the regulatory authority to the Federal Motor Carrier Safety Administration (FMCSA). Effective January 1, 2005, all motor carriers must obtain and maintain a Hazardous Materials Safety Permit (HMSP) prior to transporting specific highly hazardous materials such as:

- Radioactive materials
- Certain explosives
- One liter or more of "material poisonous by inhalation" in "hazard zone A"
- 460 liters or more of "material poisonous by inhalation" in "hazard zone B"
- 13,248 liters or more of "material poisonous by inhalation" in "hazard zone C or D"
- 13,248 liters or more of compressed or refrigerated liquefied methane, liquefied natural gas or other liquefied gas containing at least 85% methane.

(CFR Title 49 Part 385.400)

Part 397 provides further guidance to shippers regarding the rules of the road for driving and parking with HAZMAT. Subpart A covers general rules such as attendance and surveillance of the vehicle, smoking, fires and documentation. Subpart C covers specific rules regarding the routing of non-radioactive HAZMAT for intercounty and interstate travel.

According to the state and local officials contacted at NHDES, NHDOS and the Town of Milford, there are no restrictions on the time of day or day of the week for the transportation of HAZMAT. Any construction work along roadways within the Town of Milford is regulated by the Milford Police Department, including the trucking of materials site to site and the short term or long term closure of roadways. Any and all construction activities adjacent to the local roads must be coordinated with the Milford Police Department.

TRUCK ROUTES

Through physical inspection and coordination with local and state officials, the proposed truck route alternatives were determined. All routes described below are assumed to be two way routes (directions can be reversed) unless otherwise noted. The alternatives selected for truck routing take into account multiple factors. Truck routes should provide the most direct route to the destination while minimizing travel through residential neighborhoods and heavily traveled pedestrian areas,

and past schools, hospitals, and housing for the elderly. To the greatest extent possible, the downtown area was avoided due to the traffic patterns and heavy pedestrian activity. None of the routes selected have any signed height or weight restrictions beyond the standard height and weight limits for public travel.

Elm Street Area to Mill Street Area

The primary route between the Elm Street area and the Mill Street area is as follows:

- Turn right out of the Elm Street area onto westbound Elm Street;
- Turn left at the first traffic signal onto West Street, heading south;
- Turn left at the intersection with Knight Street, heading east;
- Knight Street becomes Mill Street at Johnson Street where the roadway curves to the left;
- The Mill Street site will be on the left.

The secondary route between the Elm Street area and the Mill Street area is as follows:

- Turn left out of the Elm Street area onto eastbound Elm Street;
- Turn right at the intersection with Cottage Street, heading south;
- Turn right at the intersection with Mill Street, heading west;
- The Mill Street site will be on the right.

Maps showing these routes can be found in Figures 3 and 4.

Elm Street Area to Staging Area #1

The primary route between the Elm Street area and Staging Area #1 is as follows:

- Turn right out of the Elm Street area onto westbound Elm Street;
- Turn left at the intersection with Old Wilton Road, heading southwest;
- Turn left at intersection with Perry Road, heading south;
- Staging Area #1 is located along the gravel portion of the road on the left where the road curves to the right.

The secondary route between the Elm Street area and Staging Area #1 is as follows:

- Turn left out of the Elm Street area onto eastbound Elm Street;
- Turn right at the intersection with NH Route 13 (South Street), heading south;
- Follow NH Route 13 to the interchange at NH Route 101;
- Take the right exit to NH Route 101 West toward Wilton;
- Turn right at the first traffic signal onto Old Wilton Road, heading east;
- Turn right at the intersection with Perry Road, heading south;
- Staging Area #1 is located along the gravel portion of the road on the left where the road curves to the right.

In order to avoid the downtown area traffic pattern, the reverse direction for the secondary route is as follows:

- Begin north on Perry Road;
- Turn left at the intersection with Old Wilton Road, heading west;
- Turn right at the first traffic signal onto NH Route 101 East toward Manchester;
- Take the exit for NH Route 13, bearing left at the split toward NH Route 13 North;
- Turn left at the end of the ramp to NH Route 13 North;
- Turn left at the intersection with Lincoln Street, heading west;
- Turn right at the intersection with Union Street, heading north;

- Turn left at the intersection with Garden Street, heading west;
- Turn right at the intersection with Cottage Street, heading north;
- Turn left at the intersection with Elm Street, heading west;
- Turn right into the Elm Street area.

Maps showing these routes can be found in Figures 5 and 6.

Mill Street Area to Staging Area #1

The primary route between the Mill Street area and Staging Area #1 is as follows:

- Turn right out of the Mill Street area onto westbound Mill Street;
- Follow Mill Street, which becomes Knight Street, continuing westbound;
- Turn right at the intersection with West Street, heading north;
- Turn left at the first traffic signal onto Elm Street, heading west;
- Turn left at the intersection with Old Wilton Road, heading southwest;
- Turn left at intersection with Perry Road, heading south;
- Staging Area #1 is located along the gravel portion of the road on the left where the road curves to the right.

The secondary route between the Elm Street area and Staging Area #1 is as follows:

- Turn left out of the Mill Street area onto eastbound Mill Street;
- Turn left at the intersection with Cottage Street, heading north;
- Turn right at the intersection with Elm Street, heading east;
- Turn right at the intersection with NH Route 13 (South Street), heading south;
- Follow NH Route 13 to the interchange at NH Route 101;
- Take the right exit to NH Route 101 West toward Wilton;
- Turn right at the first traffic signal onto Old Wilton Road, heading east;
- Turn right at the intersection with Perry Road, heading south;
- Staging Area #1 is located along the gravel portion of the road on the left where the road curves to the right.

In order to avoid the downtown area traffic pattern, the reverse direction for the secondary route is as follows:

- Begin north on Perry Road;
- Turn left at the intersection with Old Wilton Road, heading west;
- Turn right at the first traffic signal onto NH Route 101 East toward Manchester;
- Take the exit for NH Route 13, bearing left at the split toward NH Route 13 North;
- Turn left at the end of the ramp to NH Route 13 North;
- Turn left at the intersection with Lincoln Street, heading west;
- Turn right at the intersection with Union Street, heading north;
- Turn left at the intersection with Garden Street, heading west;
- Turn left at the intersection with Cottage Street, heading south;
- Turn right at the intersection with Mill Street, heading west;
- Turn right into the Mill Street area.

Maps showing these routes can be found in Figures 7 and 8.

Elm Street Area to Staging Area #2

The primary route between the Elm Street area and Staging Area #2 is as follows:

- Turn left out of the Elm Street area onto eastbound Elm Street;
- Turn right at the intersection with Cottage Street, heading south;
- Turn left at the intersection with Garden Street, heading east;
- Turn right at the intersection with Union Street, heading south;
- Bear right at the intersection with Beech Street, continuing south;
- Bear right at the intersection with Osgood Street, heading southwest;
- Turn right at the intersection with Mason Road, heading west;
- Turn right at the intersection with Whitten Road, heading north;
- Turn right at the intersection with Heron Pond Road, heading east;
- Staging Area #2 is located at the end of the road on the right.

The secondary route between the Elm Street area and Staging Area #2 is as follows:

- Turn right out of the Elm Street area onto westbound Elm Street;
- Turn left at the traffic signal for NH Route 101 East, heading south;
- Turn right at the first traffic signal onto Phelan Road, heading west;
- Bear left at the intersection with Whitten Road, heading southeast;
- Turn left at the intersection with Heron Pond Road, heading east;
- Staging Area #2 is located at the end of the road on the right.

Maps showing these routes can be found in Figures 9 and 10.

Mill Street Area to Staging Area #2

The primary route between the Mill Street area and Staging Area #2 is as follows:

- Turn left out of the Mill Street area onto eastbound Mill Street;
- Turn left at the intersection with Cottage Street, heading north;
- Turn right at the intersection with Garden Street, heading east;
- Turn right at the intersection with Union Street, heading south;
- Bear right at the intersection with Beech Street, continuing south;
- Bear right at the intersection with Osgood Street, heading southwest;
- Turn right at the intersection with Mason Road, heading west;
- Turn right at the intersection with Whitten Road, heading north;
- Turn right at the intersection with Heron Pond Road, heading east;
- Staging Area #2 is located at the end of the road on the right.

The secondary route between the Mill Street area and Staging Area #2 is as follows:

- Turn right out of the Mill Street area onto westbound Mill Street;
- Follow Mill Street as it becomes Knight Street, continuing westbound;
- Turn right at the intersection with West Street, heading north;
- Turn left at the first traffic signal onto Elm Street, heading west;
- Turn left at the traffic signal for NH Route 101 East, heading south;
- Turn right at the first traffic signal onto Phelan Road, heading west;
- Bear left at the intersection with Whitten Road, heading southeast;
- Turn left at the intersection with Heron Pond Road, heading east;
- Staging Area #2 is located at the end of the road on the right.

Maps showing these routes can be found in Figures 11 and 12.

Elm Street Area to NH Route 101 East

The primary route between the Elm Street area and NH Route 101 East is as follows:

- Turn right out of the Elm Street area onto westbound Elm Street;
- Turn left at the traffic signal for NH Route 101 East, heading south.

The secondary route between the Elm Street area and NH Route 101 East is as follows:

- Turn left out of the Elm Street area onto eastbound Elm Street;
- Turn right at the intersection with NH Route 13 (South Street), heading south;
- Follow NH Route 13 to the interchange at NH Route 101;
- Take the left exit to NH 101 East toward Manchester, heading east.

In order to avoid the downtown area traffic pattern, the reverse direction for the secondary route is as follows:

- Begin west along NH Route 101 West;
- Take the exit for NH Route 13, bearing right at the split toward NH Route 13 North;
- Merge onto NH Route 13 North;
- Turn left at the intersection with Lincoln Street, heading west;
- Turn right at the intersection with Union Street, heading north;
- Turn left at the intersection with Garden Street, heading west;
- Turn right at the intersection with Cottage Street, heading north;
- Turn left at the intersection with Elm Street, heading west;
- Turn right into the Elm Street area.

Maps showing these routes can be found in Figures 13 and 14.

Mill Street Area to NH Route 101 East

The primary route between the Mill Street area and NH Route 101 East is as follows:

- Turn right out of the Mill Street area onto westbound Mill Street;
- Follow Mill Street as it becomes Knight Street, continuing westbound;
- Turn right at the intersection with West Street, heading north;
- Turn left at the first traffic signal onto Elm Street, heading west;
- Turn left at the traffic signal for NH Route 101 East, heading south;

The secondary route between the Mill Street area and NH Route 101 East is as follows:

- Turn left out of the Mill Street area onto eastbound Mill Street;
- Turn left at the intersection with Cottage Street, heading north;
- Turn right at the intersection with Elm Street, heading east;
- Turn right at the intersection with NH Route 13 (South Street), heading south;
- Follow NH Route 13 to the interchange at NH Route 101;
- Take the left exit to NH 101 East toward Manchester, heading east.

In order to avoid the downtown area traffic pattern, the reverse direction for the secondary route is as follows:

- Begin west along NH Route 101 West;
- Take the exit for NH Route 13, bearing right at the split toward NH Route 13 North;
- Merge onto NH Route 13 North;
- Turn left at the intersection with Lincoln Street, heading west;
- Turn right at the intersection with Union Street, heading north;
- Turn left at the intersection with Garden Street, heading west;
- Turn left at the intersection with Cottage Street, heading south;

- Turn right at the intersection with Mill Street, heading west;
- Turn right into the Mill Street area.

Maps showing these routes can be found in Figures 15 and 16.

CONSTRUCTION DETOURS

During the remediation of the Elm Street and Mill Street Areas, it is expected that the adjacent roadway may be closed temporarily. In the event of a road closure, a detour plan must be put in place to maintain traffic around the work area(s). At this time, it is anticipated that Mill Street will be closed to all traffic adjacent to the Mill Street Area throughout the remedial action. Elm Street will require a single lane closure on the north side (westbound lane and shoulder) for a short duration during the remedial action.

Closure of Mill Street

Mill Street between West Street and Cottage Street services one commercial property and less than ten residential properties. The closure of Mill Street adjacent to the Mill Street Area will directly impact a total of three residential properties. Accommodations for these properties can be made in the field. The closure of Mill Street will require a detour of traffic to Elm Street, exclusive of the time period when Elm Street will be partially closed. The detour would consist of West Street, Garden Street, Union Street and Elm Street. This detour route is shown in Figure 17.

Closure of Elm Street (single lane) and Mill Street, Concurrently

With an average daily traffic of over 16,000 vehicles per day, Elm Street is a principal roadway for east-west mobility within the town. The full closure of Elm Street would have significant impact on the transportation system within Milford. Mill Street would be the next closest east-west roadway, although it would also be closed in this scenario. A proposed detour route must be capable of sustaining not only the normal daily traffic, but also must have excess capacity to handle the additional traffic detoured away from Elm Street. Under the assumption that Elm Street can accommodate a single lane of traffic on the south side (eastbound lane), a one directional detour would be required. If the detour were to occur when school is out of session (summer), a local detour utilizing West Street, Osgood Street and Union Street could be implemented. In this scenario, the westbound traffic would continue to be the through movement along Elm Street, shifting to the eastbound lane in the constrained portion of Elm Street. The eastbound traffic along Elm Street would be detoured at West Street, to Osgood Road, to Union Street, returning to Elm Street east of the closure. This detour route is shown in Figure 18.

Pedestrian Detours

Pedestrian traffic must also be accommodated when considering the closure or partial closure of roadways. In addition, pedestrian access to the existing park to the west of the Elm Street Area should be maintained. As Elm Street will not be completely closed, pedestrians will still have access to the sidewalk on the south side (eastbound side) of Elm Street. Mill Street does not have existing sidewalk and from physical observations, does not appear to be heavily traveled by pedestrians. With Mill Street closed to all traffic, pedestrians would be detoured to the nearest through path, which would be at Elm Street. Therefore, the south side sidewalk along Elm Street should remain open and protected for use by pedestrians. The existing crosswalks at Cottage Street and Keyes

Field Road could be utilized to detour pedestrians from the north side sidewalk to the south side sidewalk.

ONGOING ACTIVITIES

In addition to the evaluation of physical conditions described herein, VHB is conducting a traffic count data collection program to establish current (2006) daily and peak hour traffic volumes at key locations. The data collection effort is presently underway, with automatic traffic recorders (ATRs) placed on Elm Street, Union Street and West Street. The ATRs will be in place for 30 days, including Memorial Day weekend. In addition, weekday morning, weekday evening and Saturday midday peak hour turning movement counts are scheduled for early May at the following intersections:

- Elm Street at Cottage Street
- Elm Street at West Street
- Elm Street at Old Wilton Road
- NH Route 101 at Elm Street
- NH Route 13 at Lincoln Street
- Osgood Road at Mason Road

Upon completing the data collection program, VHB will conduct traffic operations analyses to determine existing levels of service (LOS) at these key locations. Based on the findings of these analyses, VHB will conduct an evaluation of the proposed truck routes. The final report will be included in the next Remedial Design submittal.

APPENDIX

FIGURES

- Figure 1: Site Location Map
- Figure 2: Site Location Map of Staging Areas
- Figure 3: Elm Street Area to Mill Street Area, Primary Route
- Figure 4: Elm Street Area to Mill Street Area, Secondary Route
- Figure 5: Elm Street Area to Staging Area #1, Primary Route
- Figure 6: Elm Street Area to Staging Area #1, Secondary Route
- Figure 7: Mill Street Area to Staging Area #1, Primary Route
- Figure 8: Mill Street Area to Staging Area #1, Secondary Route
- Figure 9: Elm Street Area to Staging Area #2, Primary Route
- Figure 10: Elm Street Area to Staging Area #2, Secondary Route
- Figure 11: Mill Street Area to Staging Area #2, Primary Route
- Figure 12: Mill Street Area to Staging Area #2, Secondary Route
- Figure 13: Elm Street Area to NH Route 101 East, Primary Route
- Figure 14: Elm Street Area to NH Route 101 East, Secondary Route
- Figure 15: Mill Street Area to NH Route 101 East, Primary Route
- Figure 16: Mill Street Area to NH Route 101 East, Secondary Route
- Figure 17: Detour Plan for Mill Street Closure
- Figure 18: Detour Plan for Elm Street Partial Closure

J:\51784.00\graphics\FIGURES\51784SLM.DWG

Vanasse Hangen Brustlin, Inc.

Figure 1

Site Location Map

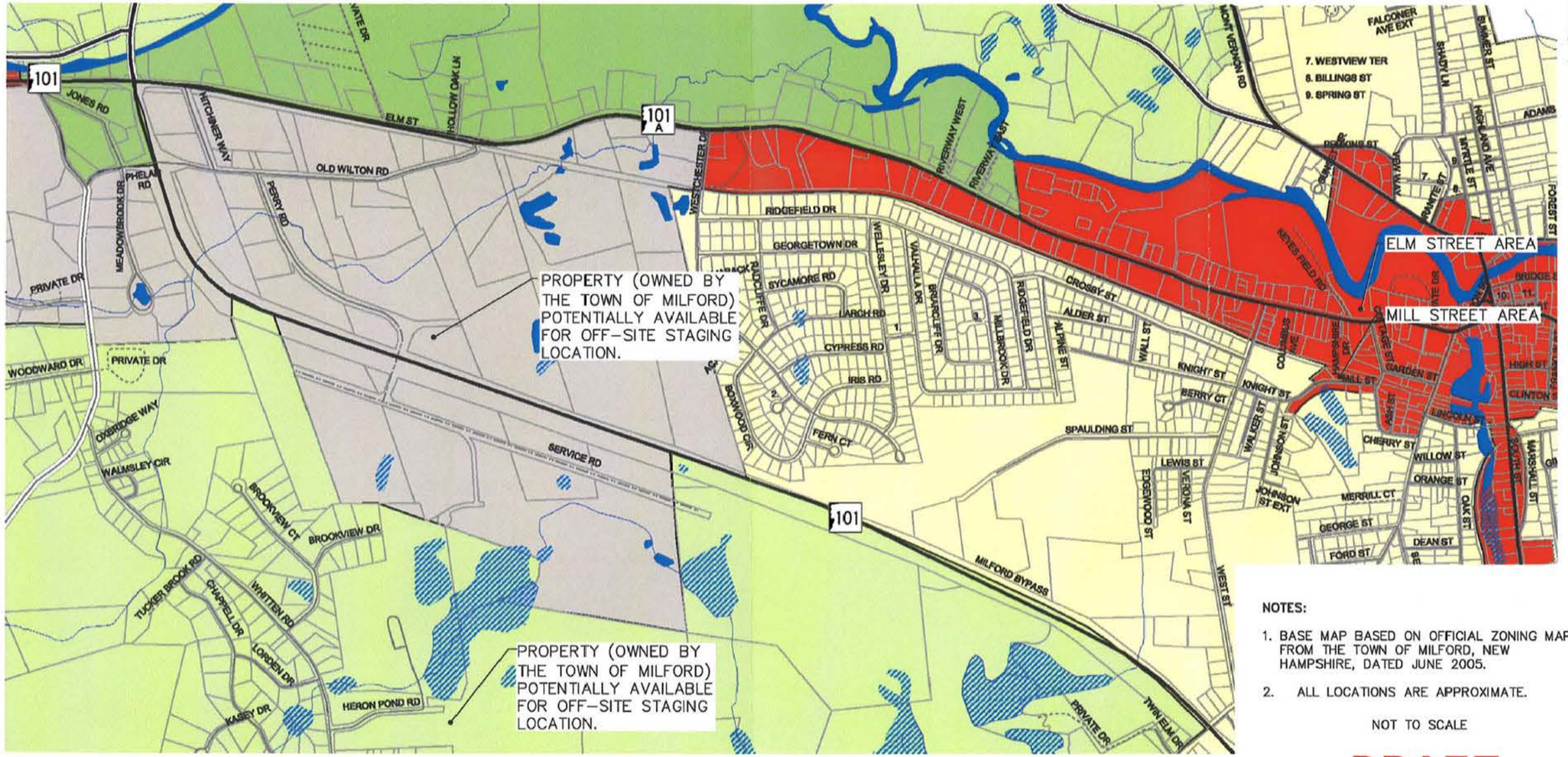

NOTES:

1. BASE MAP BASED ON OFFICIAL ZONING MAP FROM THE TOWN OF MILFORD, NEW HAMPSHIRE, DATED JUNE 2005.
2. ALL LOCATIONS ARE APPROXIMATE.

NOT TO SCALE

DRAFT

CONFIDENTIAL

ZONING DISTRICTS
- COMMERCIAL
- INDUSTRIAL
- INTEGRATED COMMERCIAL INDUSTRIAL
- LIMITED COMMERCIAL
- RESIDENCE A
- RESIDENCE B
- RESIDENCE R

MILFORD ROAD SYSTEM
- STATE ROAD
- LOCAL ROAD
- CLASS VI
- PRIVATE ROAD
- UNDER CONSTRUCTION AS OF 12/2005
- SCENIC ROAD

MILFORD WATER RESOURCES
- LAKE/POND
- WETLANDS
- RIVER/STREAM
- OTHER

X: 10002X00.DWG
L: ON=*, OFF=*, REF
P: PAGESET/PLT-BL1
4/11/06 SYR-85-KLS
10002102/10002B01.DWG

FLETCHER'S PAINT WORKS & STORAGE FACILITY
SUPERFUND SITE
MILFORD, NEW HAMPSHIRE

POTENTIAL STAGING AREAS SITE MAP

BBL® BLASLAND, BOUCK & LEE, INC. engineers, scientists, economists

FIGURE 1

Vanasse Hangen Brustlin, Inc.

Figure 2

Site Layout Plan

J:\51784.00\graphics\FIGURES\MilfordTownMapping.dwg

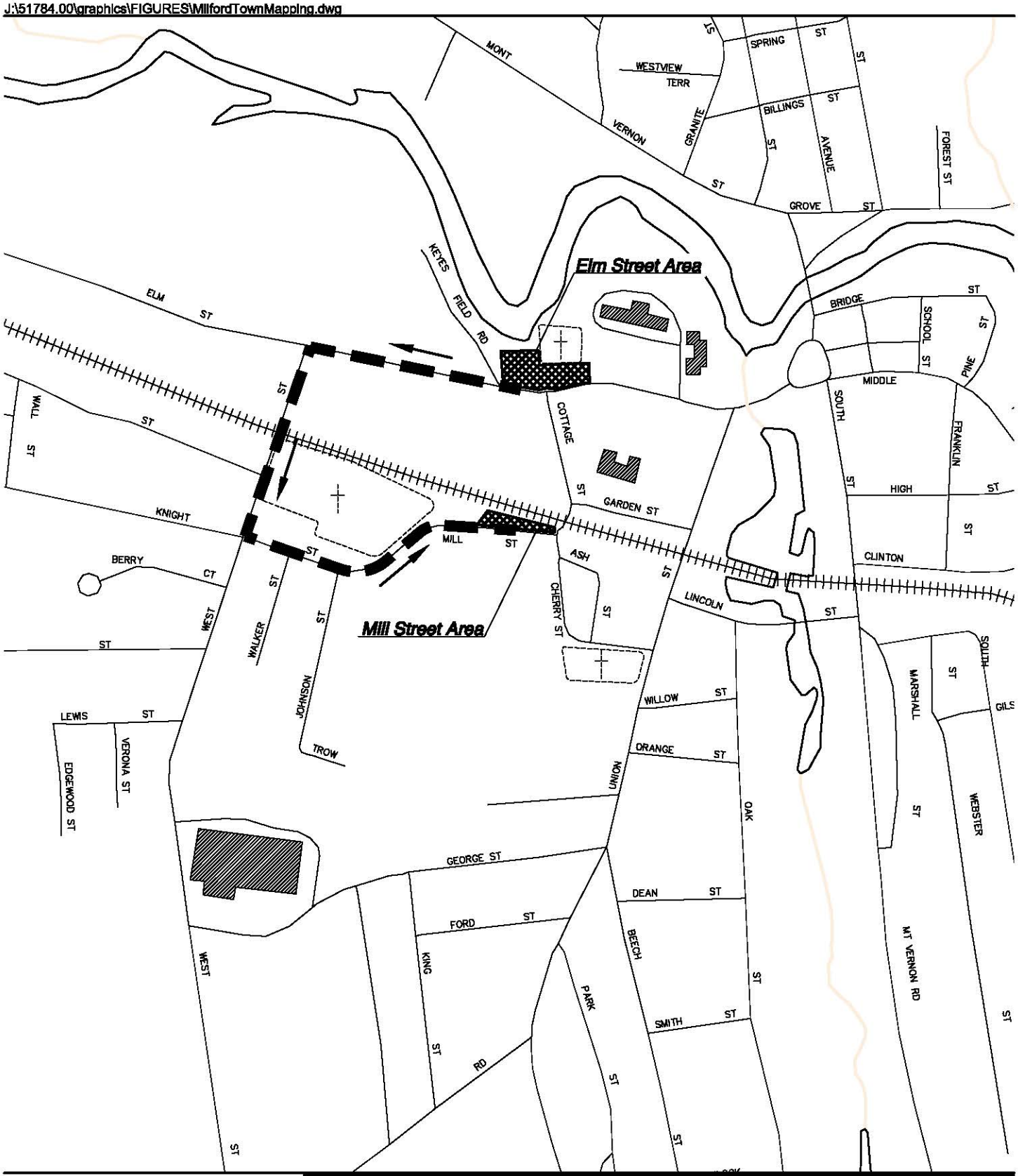

Vanasse Hangen Brustlin, Inc.

Elm Street Area to Mill Street Area
Primary Route

Figure 3

Not to Scale

J:\51784.00\graphics\FIGURES\MilfordTownMapping.dwg

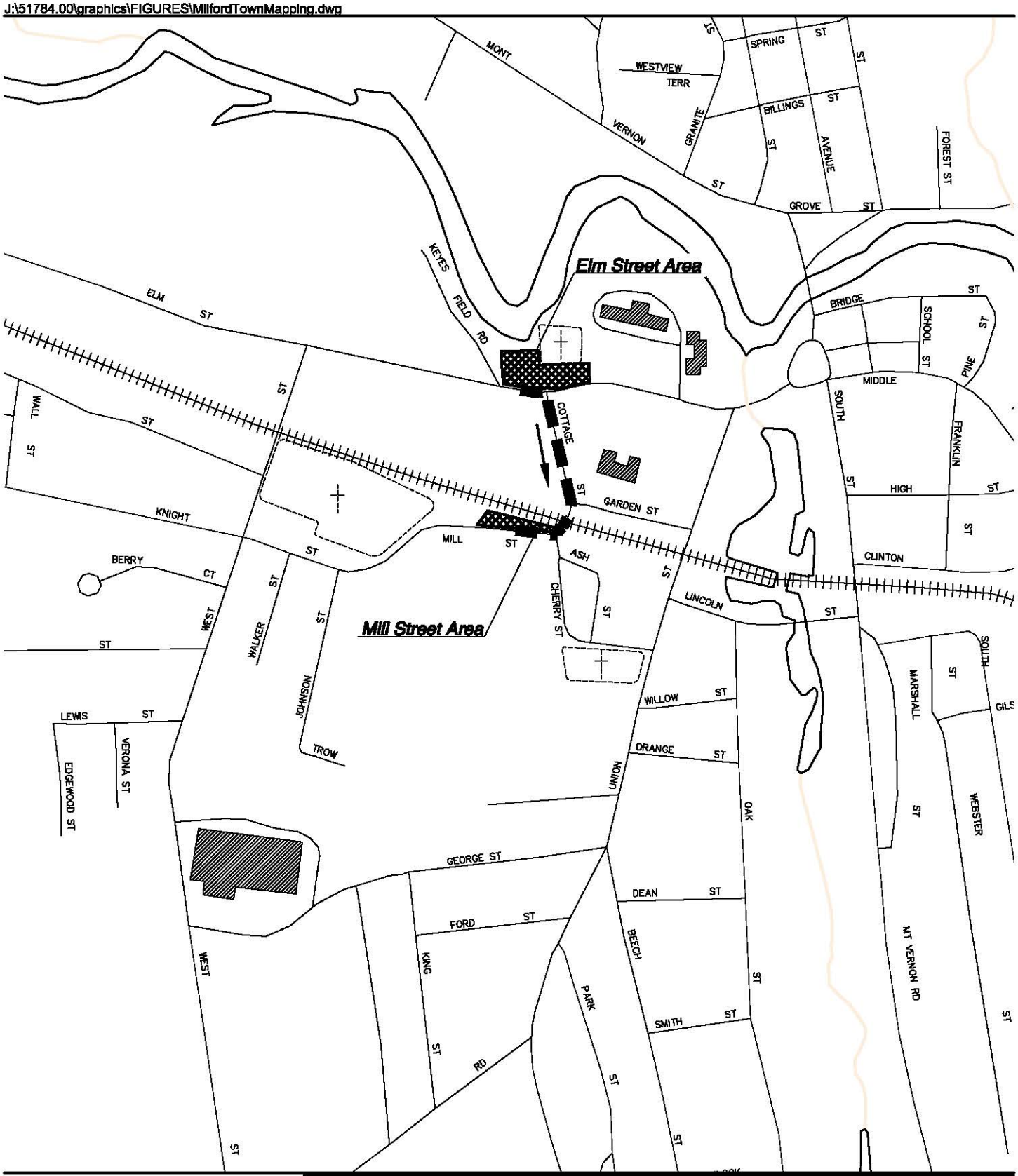

Vanasse Hangen Brustlin, Inc.

Elm Street Area to Mill Street Area
Secondary Route

Figure 4

Not to Scale

J:\51784.00\graphics\FIGURES\MilfordTownMapping.dwg

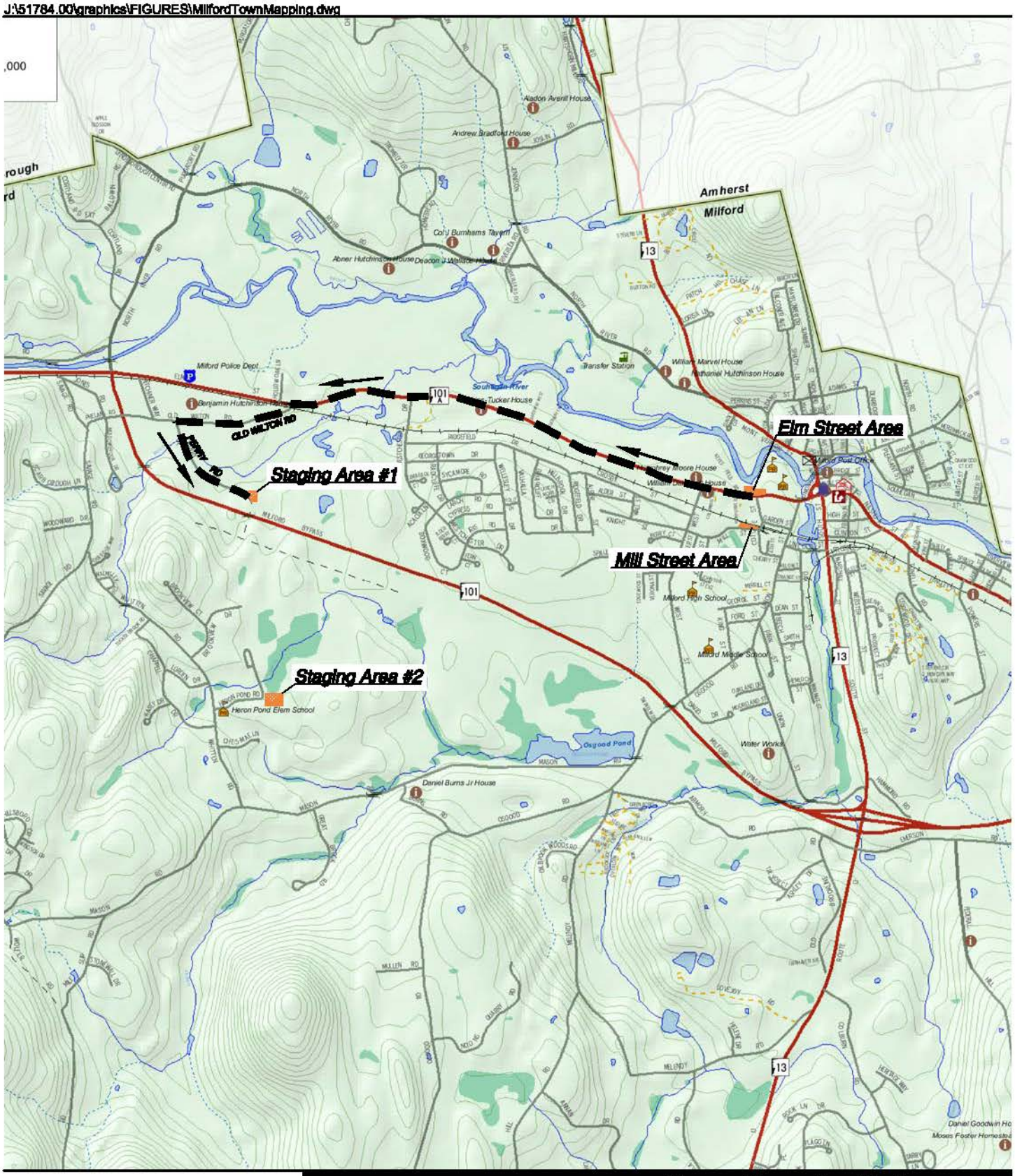

Vanasse Hangen Brustlin, Inc.

Elm Street Area to Staging Area #1
Primary Route

Figure 5

Not to Scale

J:\51784.00\graphics\FIGURES\MilfordTownMapping.dwg

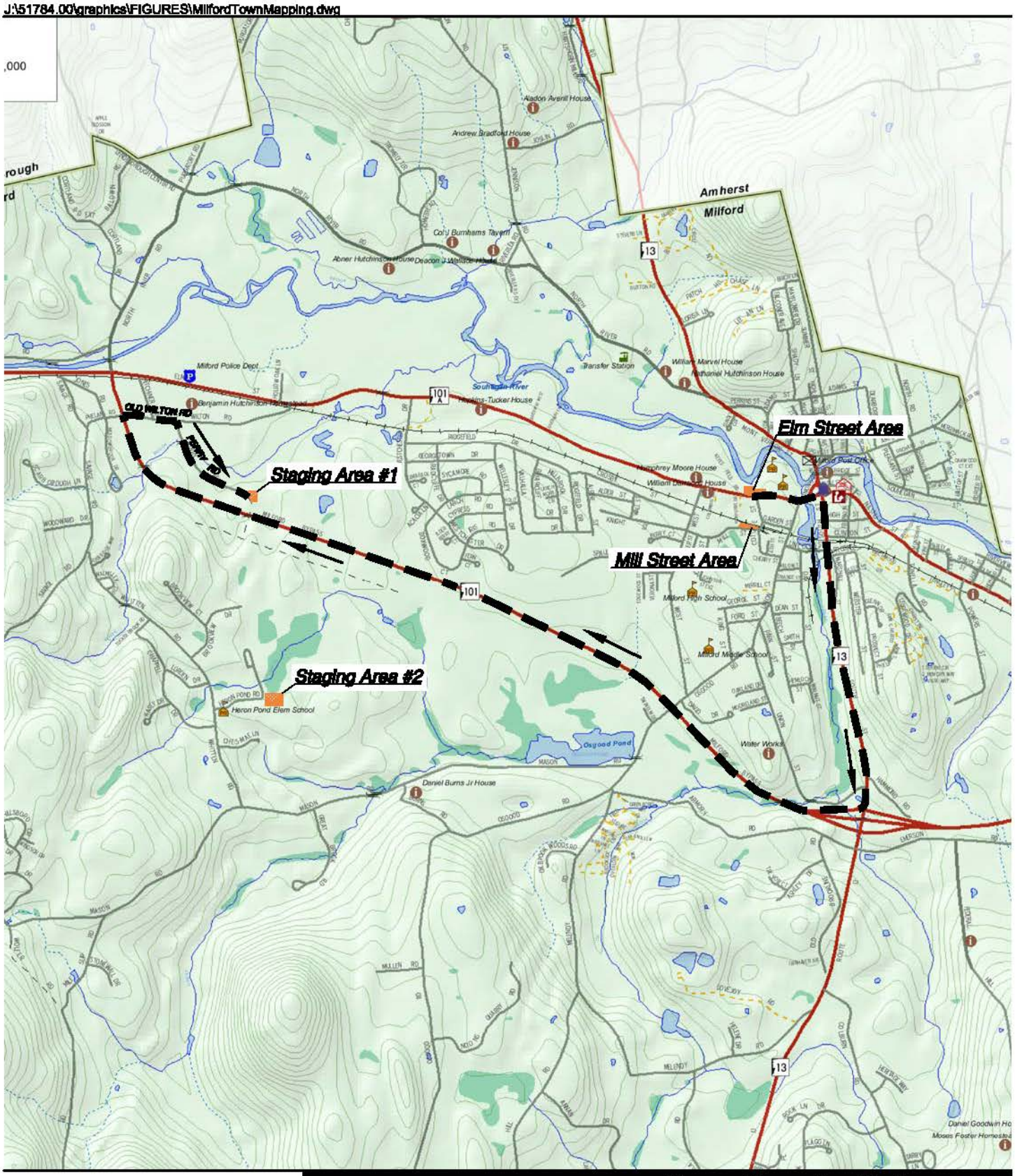

Vanasse Hangen Brustlin, Inc.

Elm Street Area to Staging Area #1
Secondary Route

Figure 6

Not to Scale

J:\51784.00\graphics\FIGURES\MilfordTownMapping.dwg

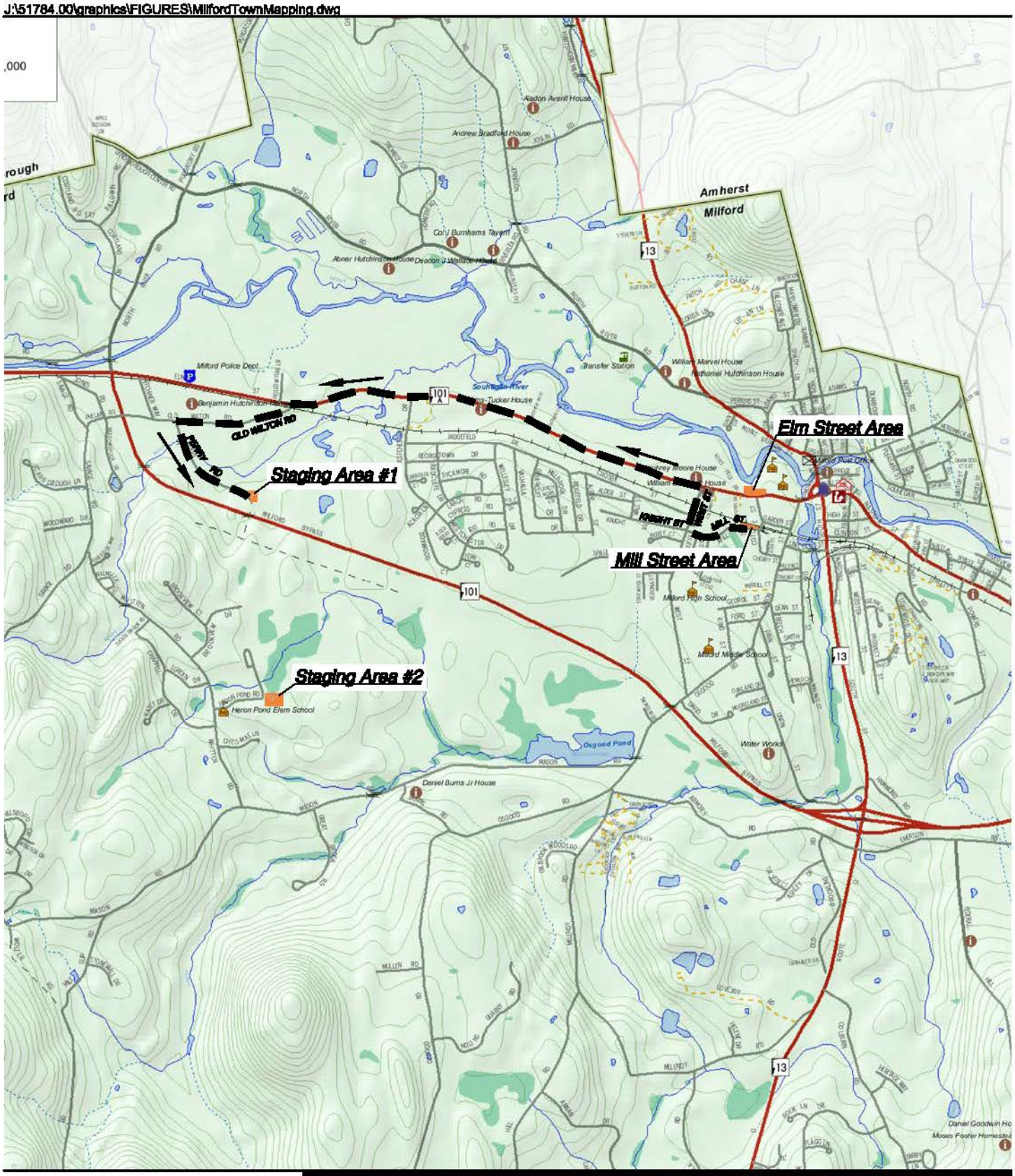

Vanasse Hangen Brustlin, Inc.

Mill Street Area to Staging Area #1 Figure 7
Primary Route

Not to Scale

J:\51784.00\graphics\FIGURES\MilfordTownMapping.dwg

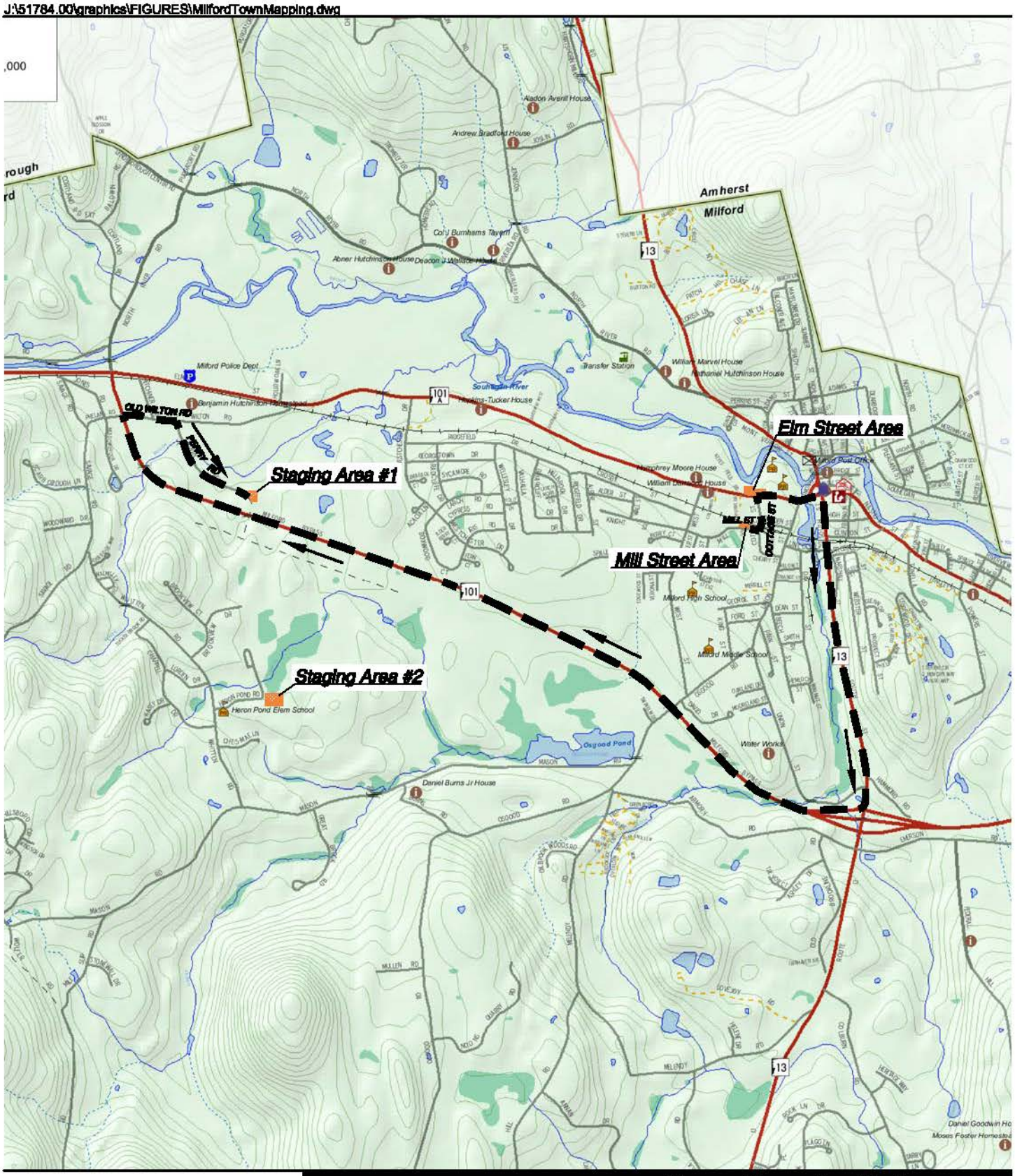

Vanasse Hangen Brustlin, Inc.

Mill Street Area to Staging Area #1
Secondary Route

Figure 8

Not to Scale

J:\51784.00\graphics\FIGURES\MilfordTownMapping.dwg

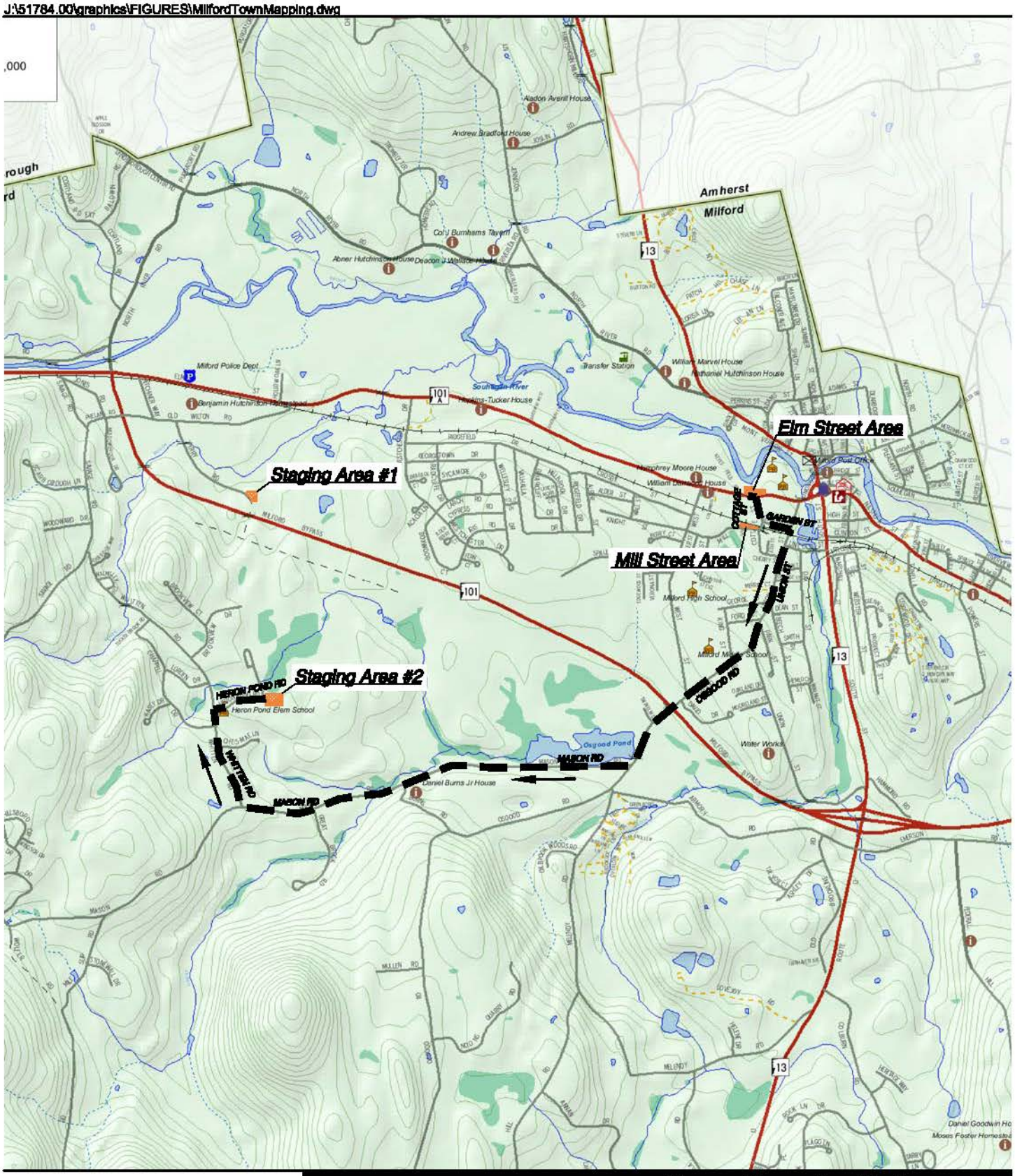

Vanasse Hangen Brustlin, Inc.

Elm Street Area to Staging Area #2
Primary Route

Figure 9

Not to Scale

J:\51784.00\graphics\FIGURES\MilfordTownMapping.dwg

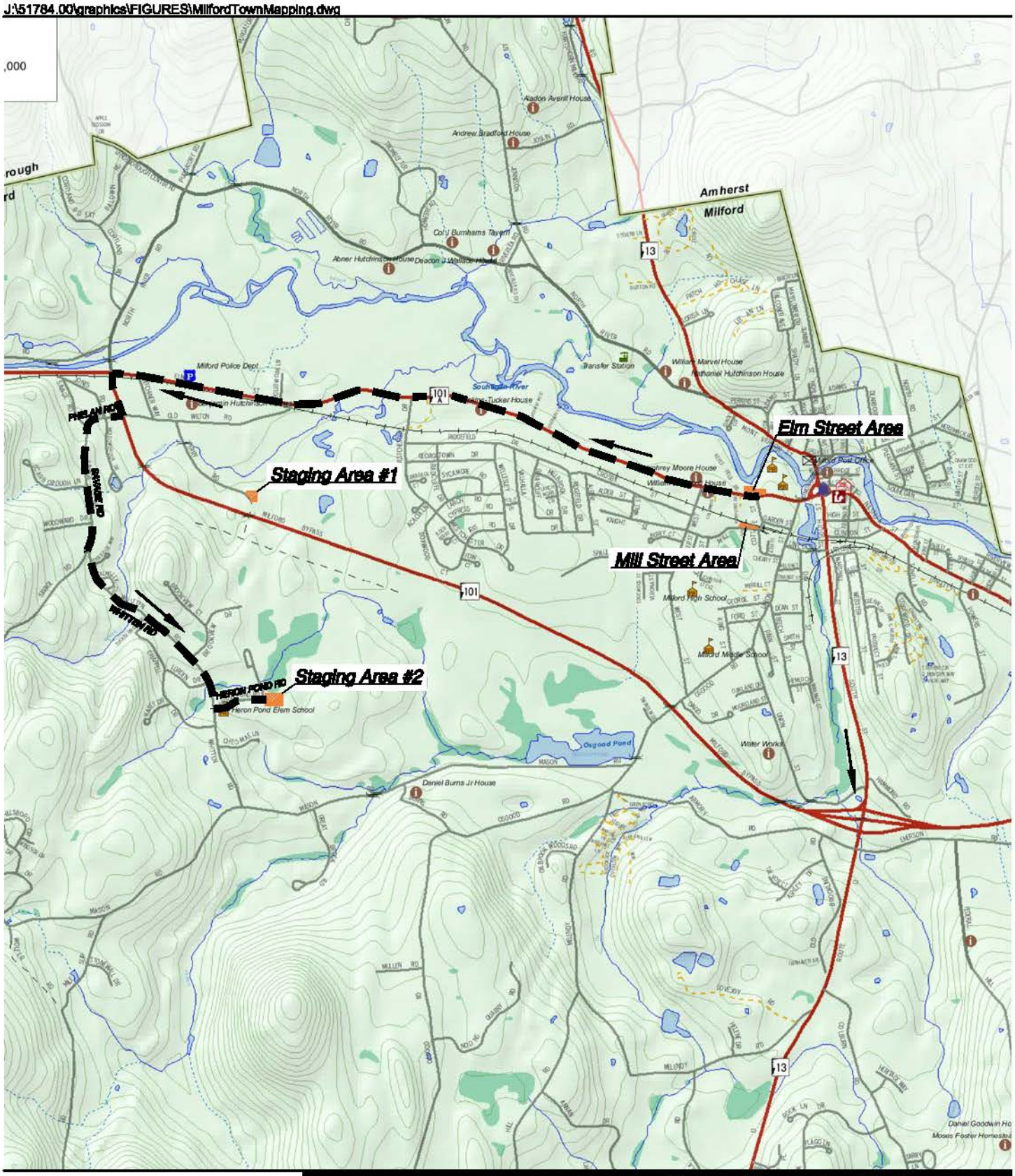

Vanasse Hangen Brustlin, Inc.

Elm Street Area to Staging Area #2
Secondary Route

Figure 10

Not to Scale

J:\51784.00\graphics\FIGURES\MilfordTownMapping.dwg

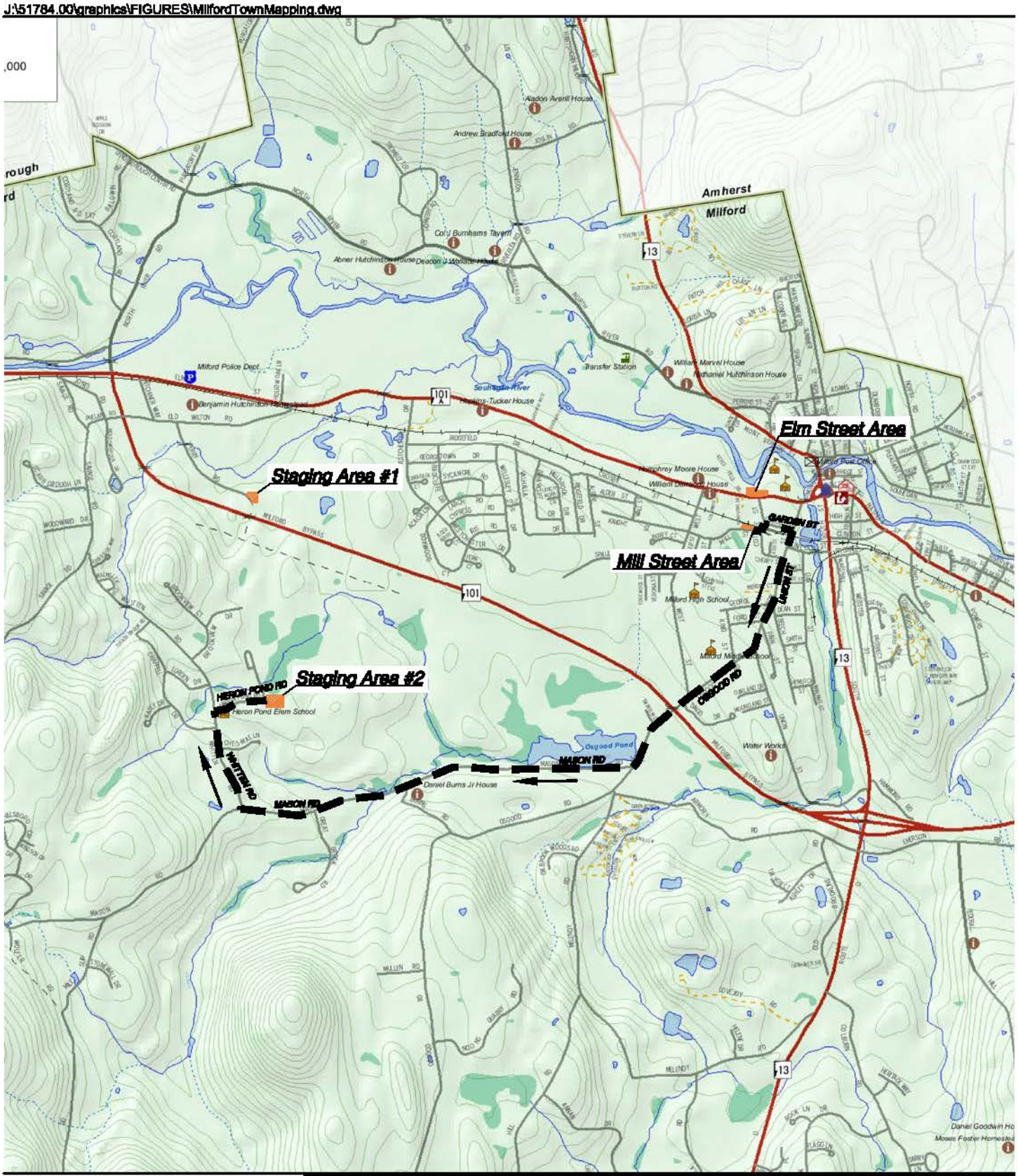

Vanasse Hangen Brustlin, Inc.

Mill Street Area to Staging Area #2 Primary Route

Figure 11

Not to Scale

J:\51784.00\graphics\FIGURES\MilfordTownMapping.dwg

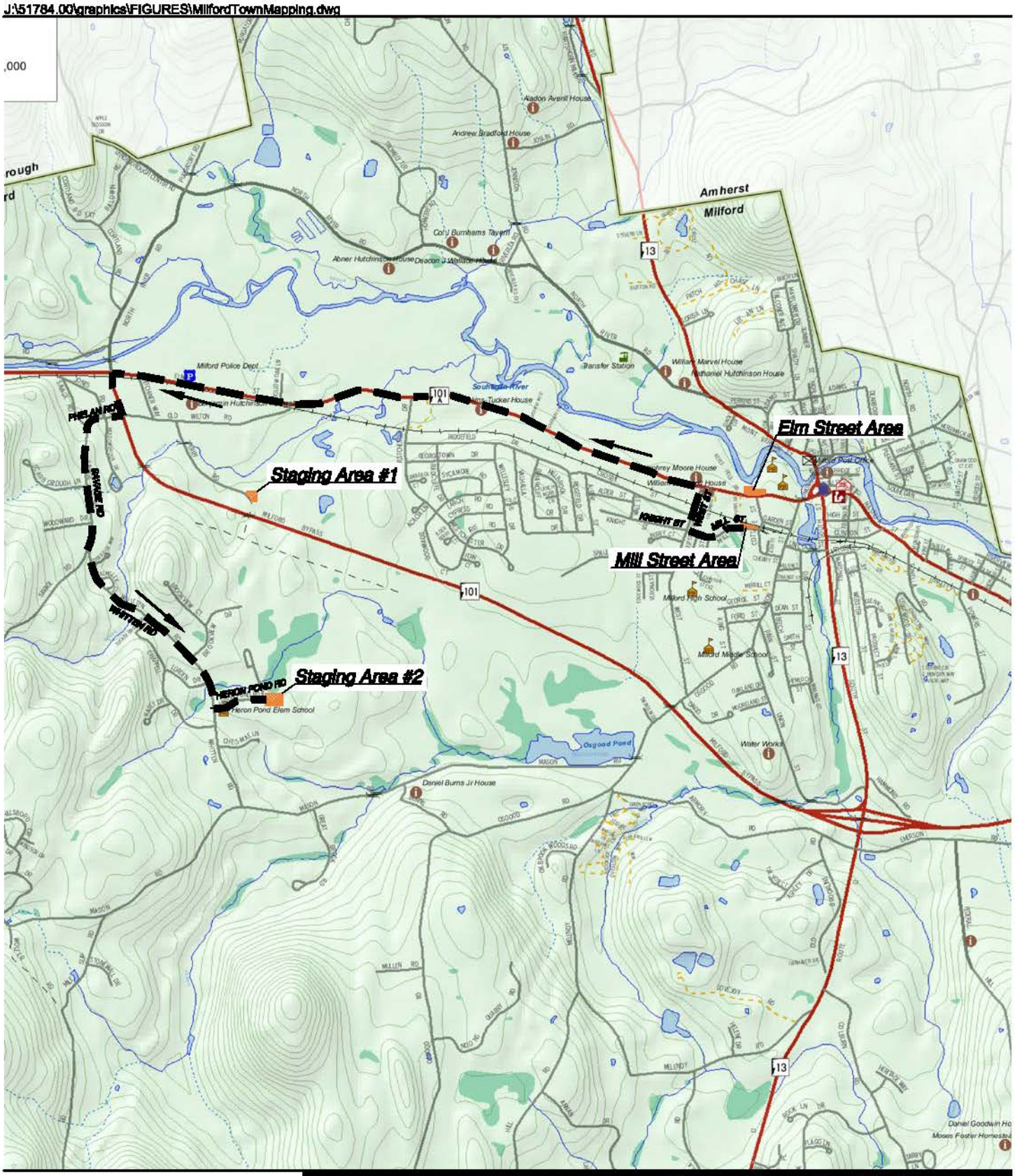

Vanasse Hangen Brustlin, Inc.

Mill Street Area to Staging Area #2 Figure 12
Secondary Route

Not to Scale

J:\51784.00\graphics\FIGURES\MilfordTownMapping.dwg

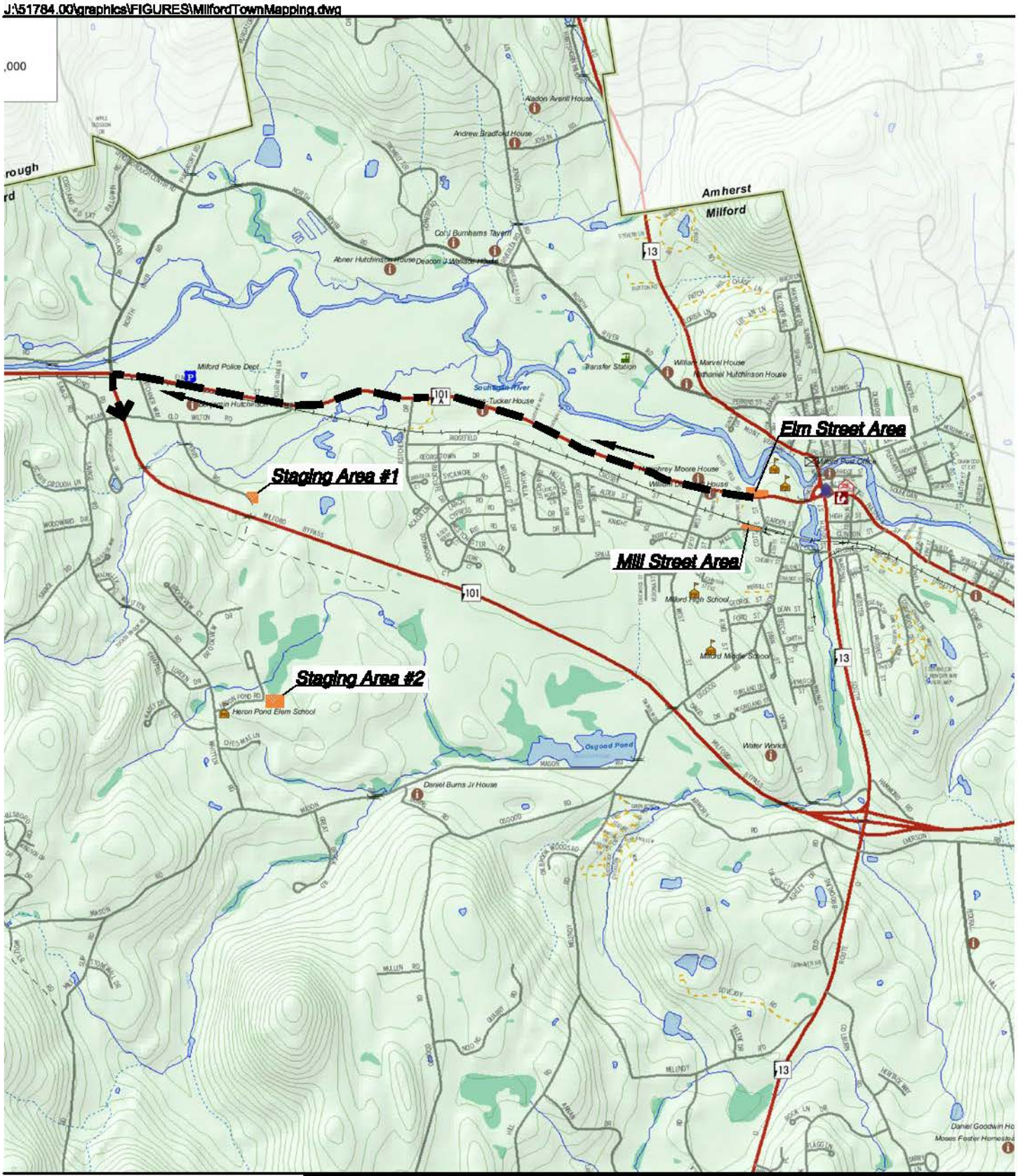

Vanasse Hangen Brustlin, Inc.

Elm Street Area to NH Route 101 East Primary Route

Figure 13

Not to Scale

J:\51784.00\graphics\FIGURES\MilfordTownMapping.dwg

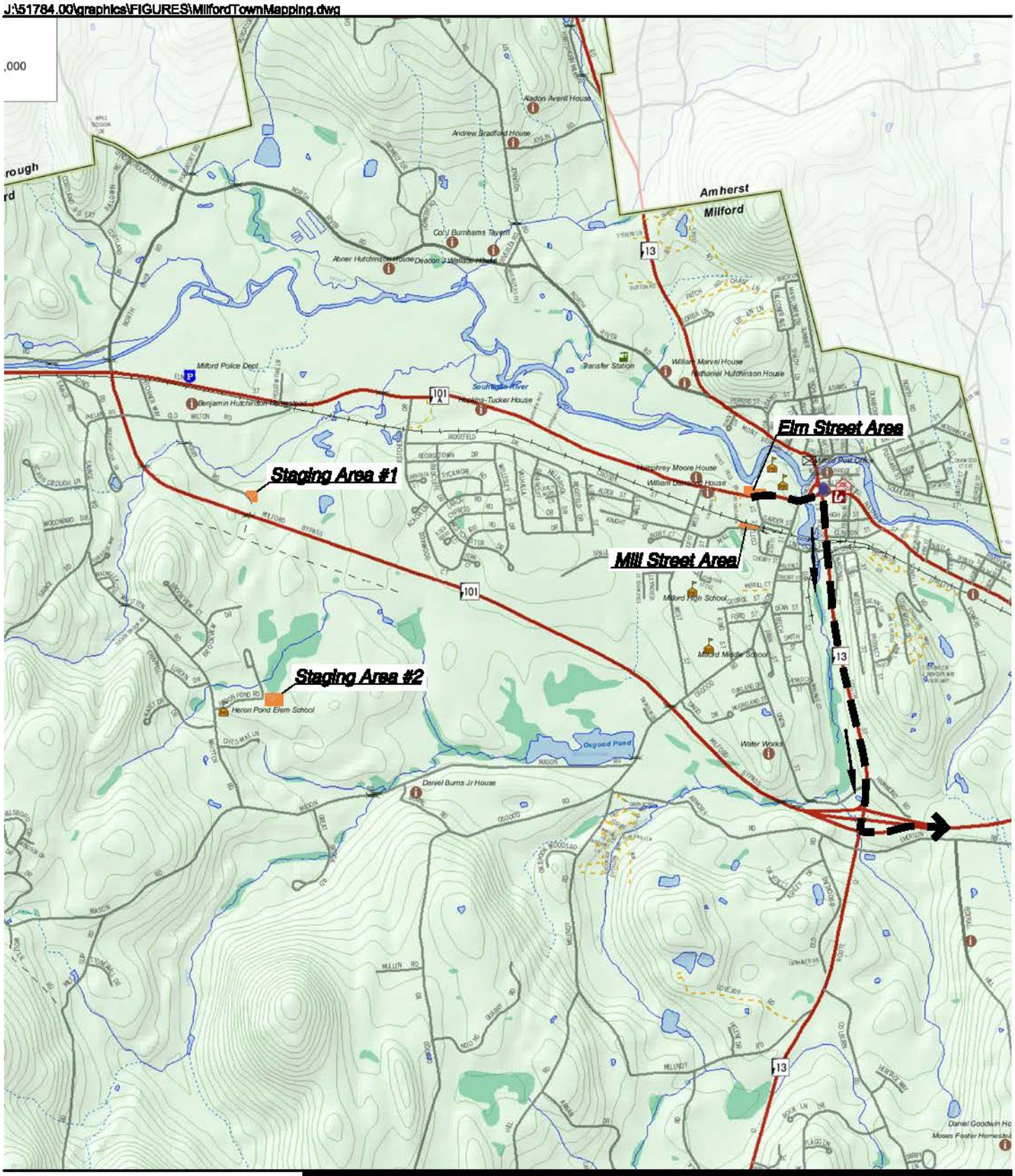

Vanasse Hangen Brustlin, Inc.

Elm Street Area to NH Route 101 East Secondary Route

Figure 14

Not to Scale

J:\51784.00\graphics\FIGURES\MilfordTownMapping.dwg

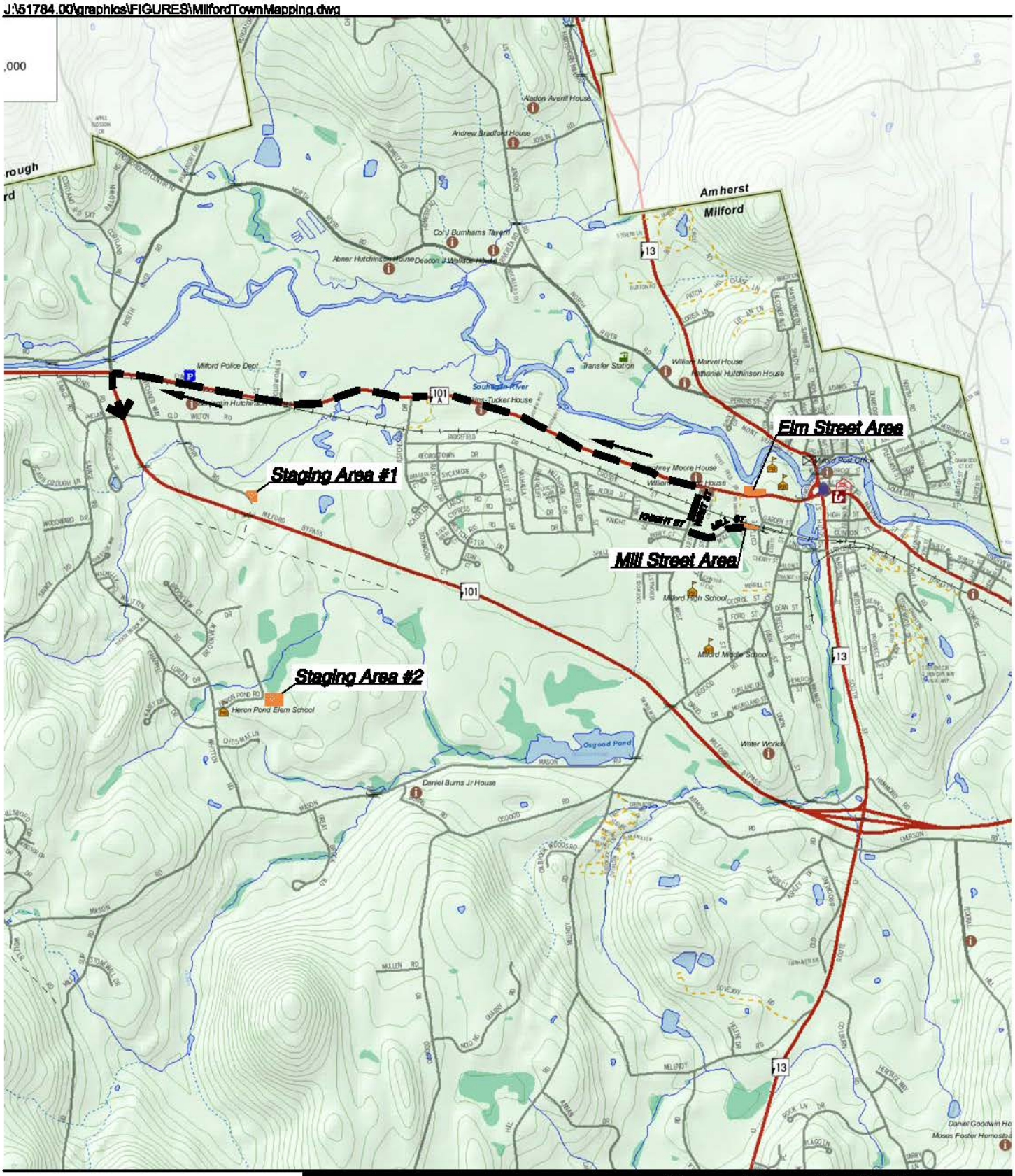

Vanasse Hangen Brustlin, Inc.

Mill Street Area to NH Route 101 East Primary Route

Figure 15

Not to Scale

J:\51784.00\graphics\FIGURES\MilfordTownMapping.dwg

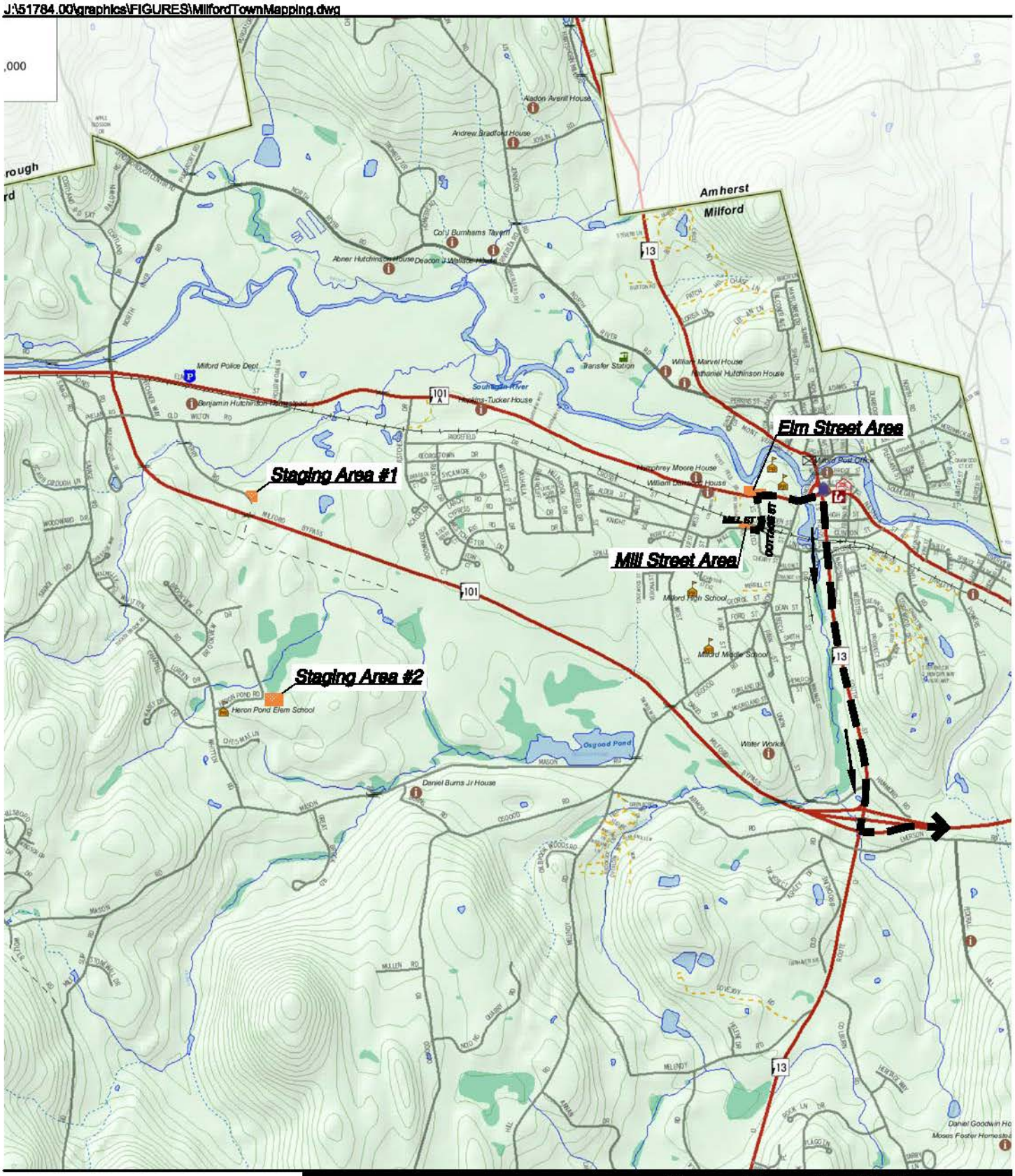

Vanasse Hangen Brustlin, Inc.

Mill Street Area to NH Route 101 East Secondary Route

Figure 16

Not to Scale

J:\51784.00\graphics\FIGURES\MilfordTownMapping.dwg

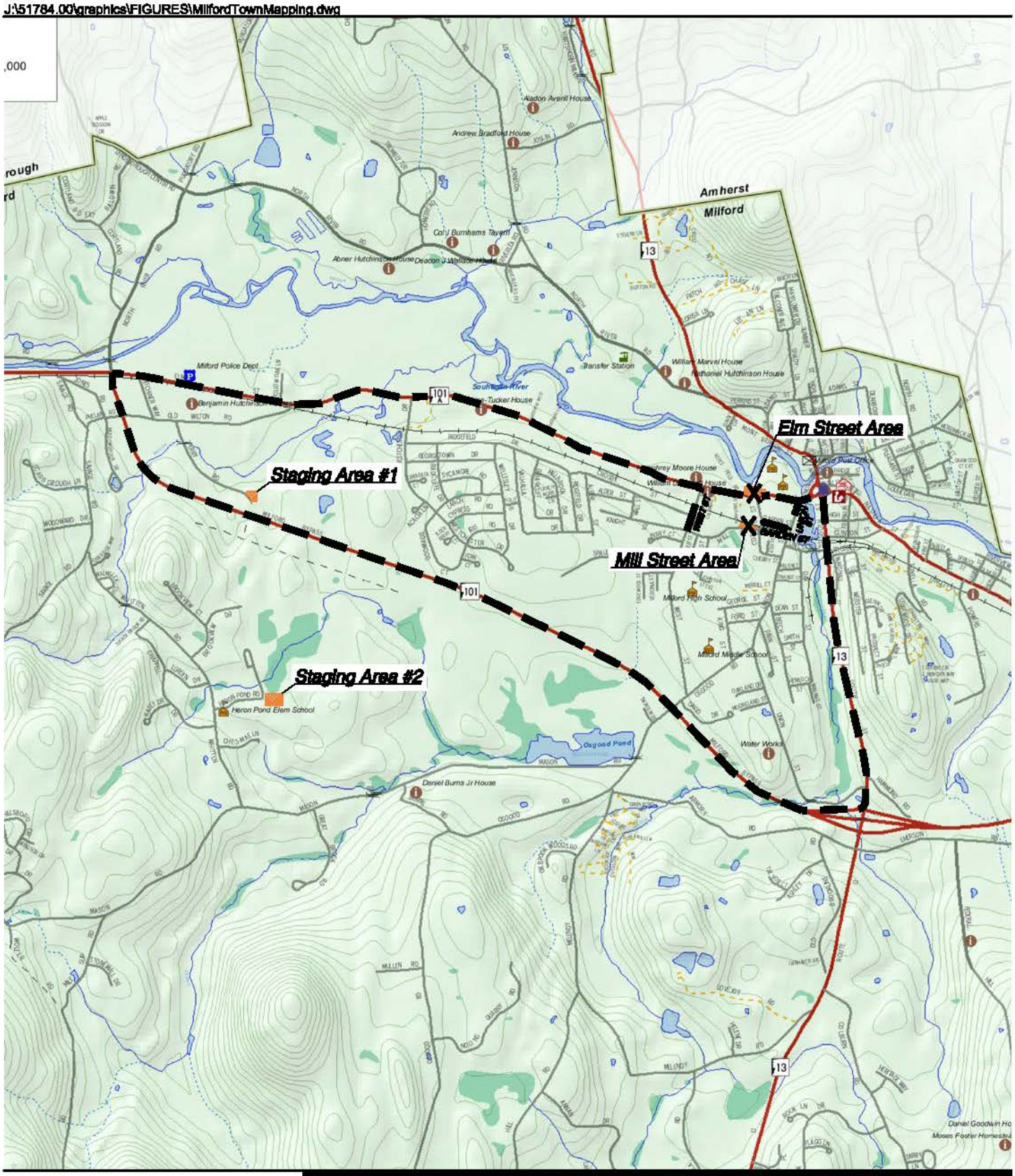

Vanasse Hangen Brustlin, Inc.

Detour Plan for Elm Street and Mill Street Closures

Figure 17

Not to Scale

J:\51784.00\graphics\FIGURES\MilfordTownMapping.dwg

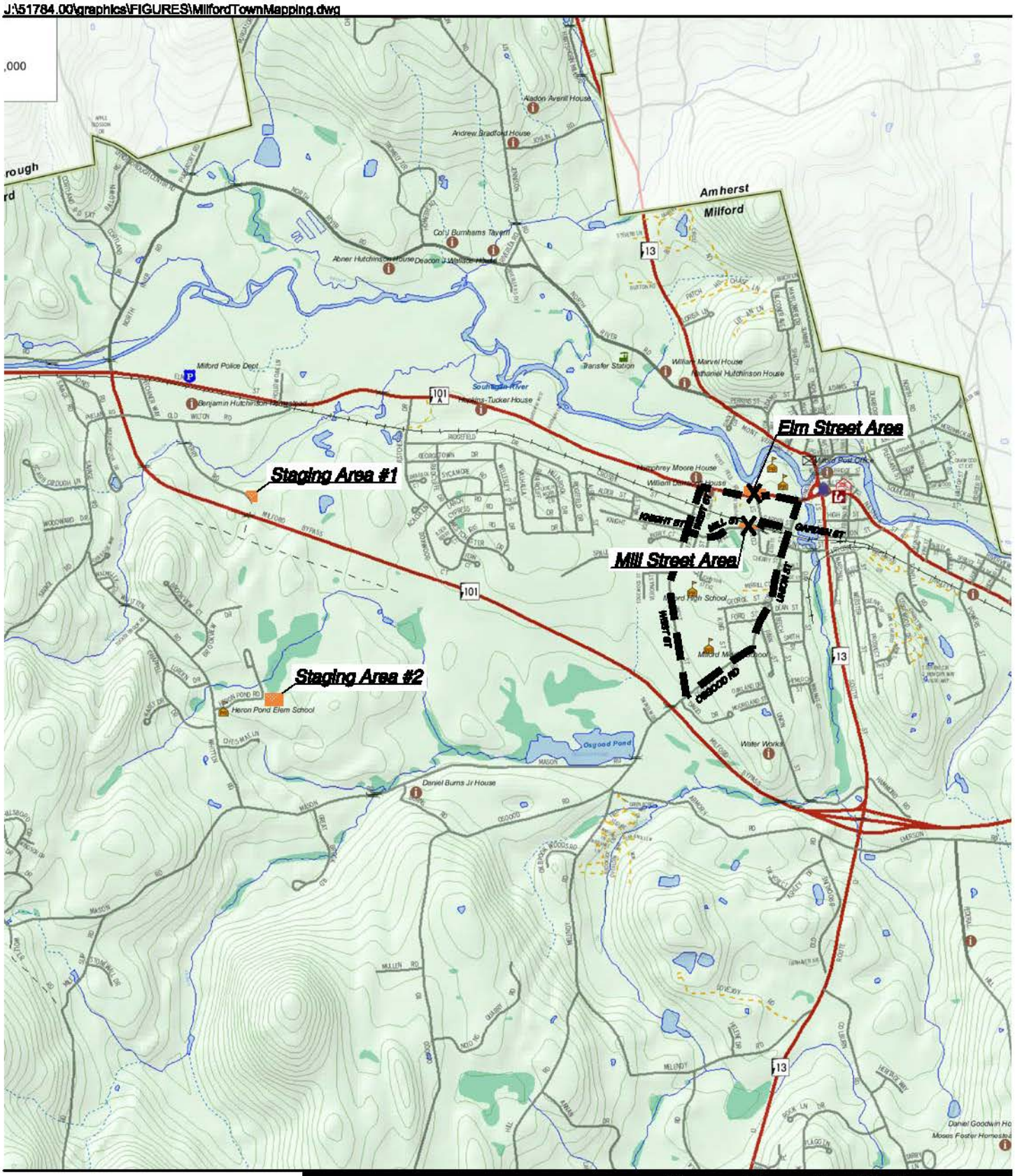

Vanasse Hangen Brustlin, Inc.

Alternative Off-Peak Detour Plan for Elm Street and Mill Street Closures

Figure 18

Not to Scale

Attachment B

Intersection Summaries

Attachment B-1

Existing (2006) Intersection Summaries

INTERSECTION SUMMARY

TURNING MOVEMENT COUNT

Project: FLETCHER'S PAINT **Date:** 11/30/2007

Location: ELM STREET & COTTAGE STREET **Job Number:**

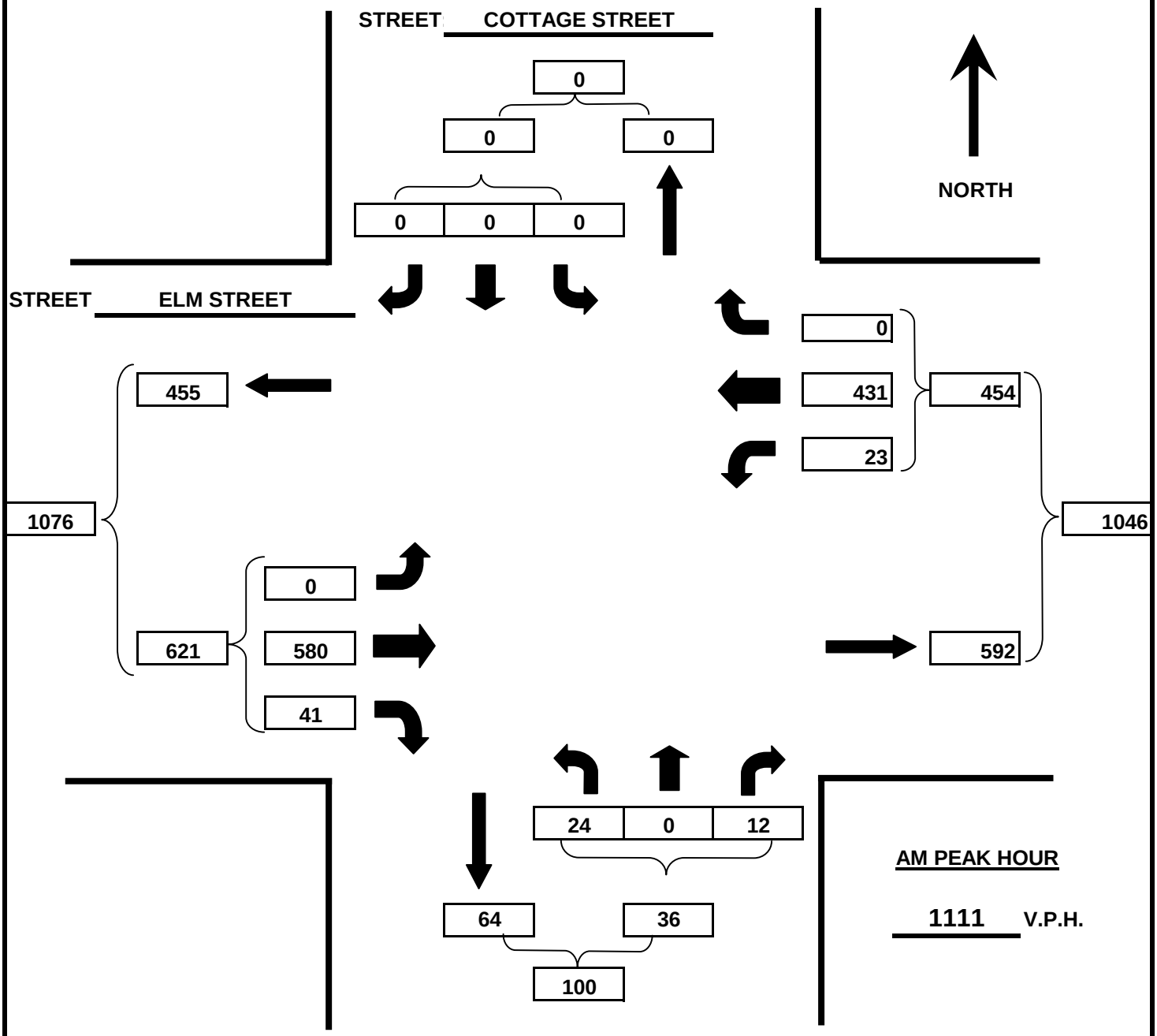

SURVEY DATE 5/2/2006 DAY OF WEEK Tuesday WEATHER RAIN

AM PEAK HOUR FROM 7:15 AM TO 8:15 AM

ARCADIS

INTERSECTION SUMMARY

TURNING MOVEMENT COUNT

Project: FLETCHER'S PAINT **Date:** 11/30/2007

Location: ELM STREET & COTTAGE STREET **Job Number:**

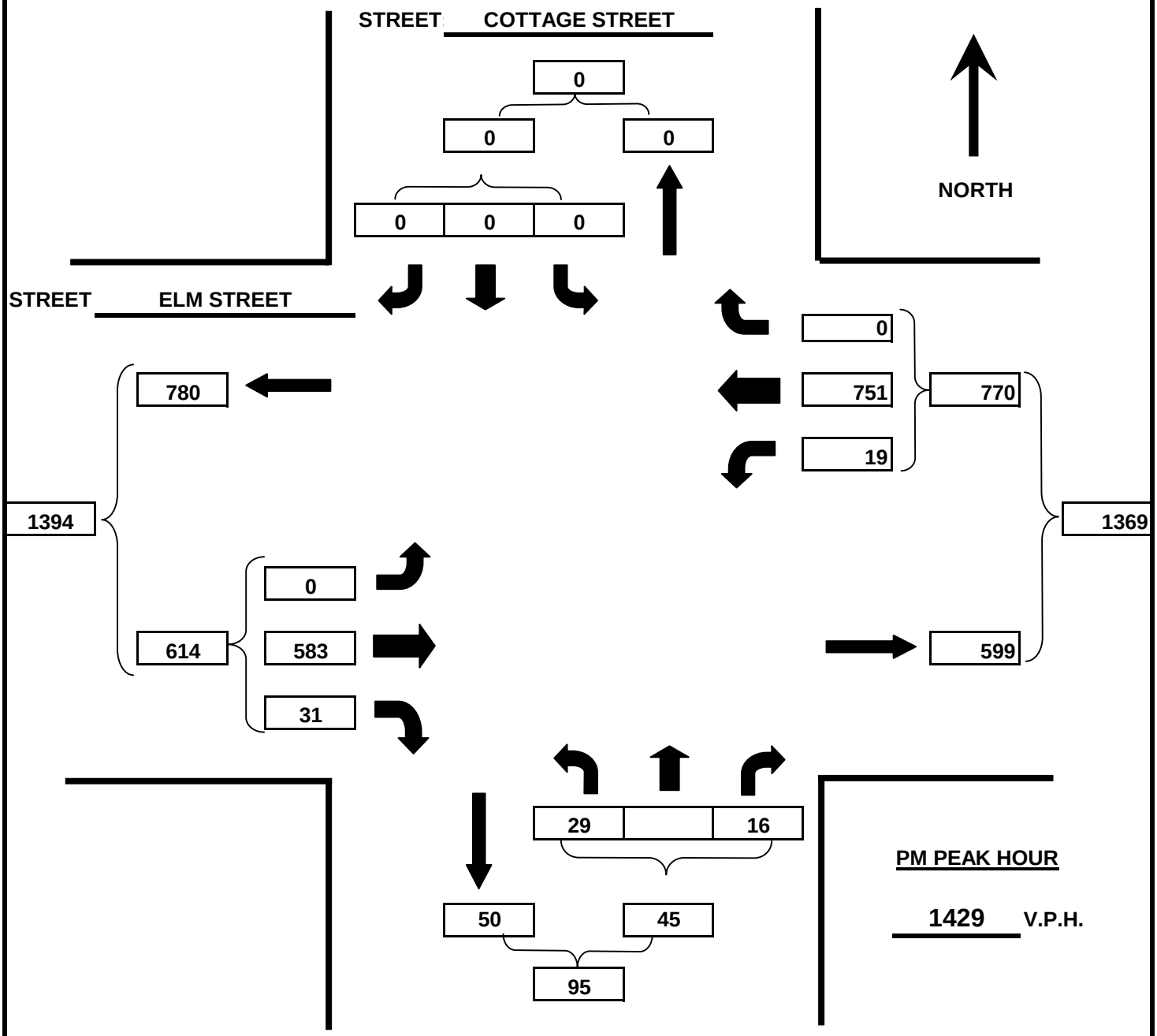

SURVEY DATE 5/2/2006 DAY OF WEEK Tuesday WEATHER RAIN

PM PEAK HOUR FROM 5:00 PM TO 6:00 PM

ARCADIS

INTERSECTION SUMMARY

TURNING MOVEMENT COUNT

Project: FLETCHER'S PAINT **Date:** 11/30/2007

Location: ELM STREET & COTTAGE STREET **Job Number:**

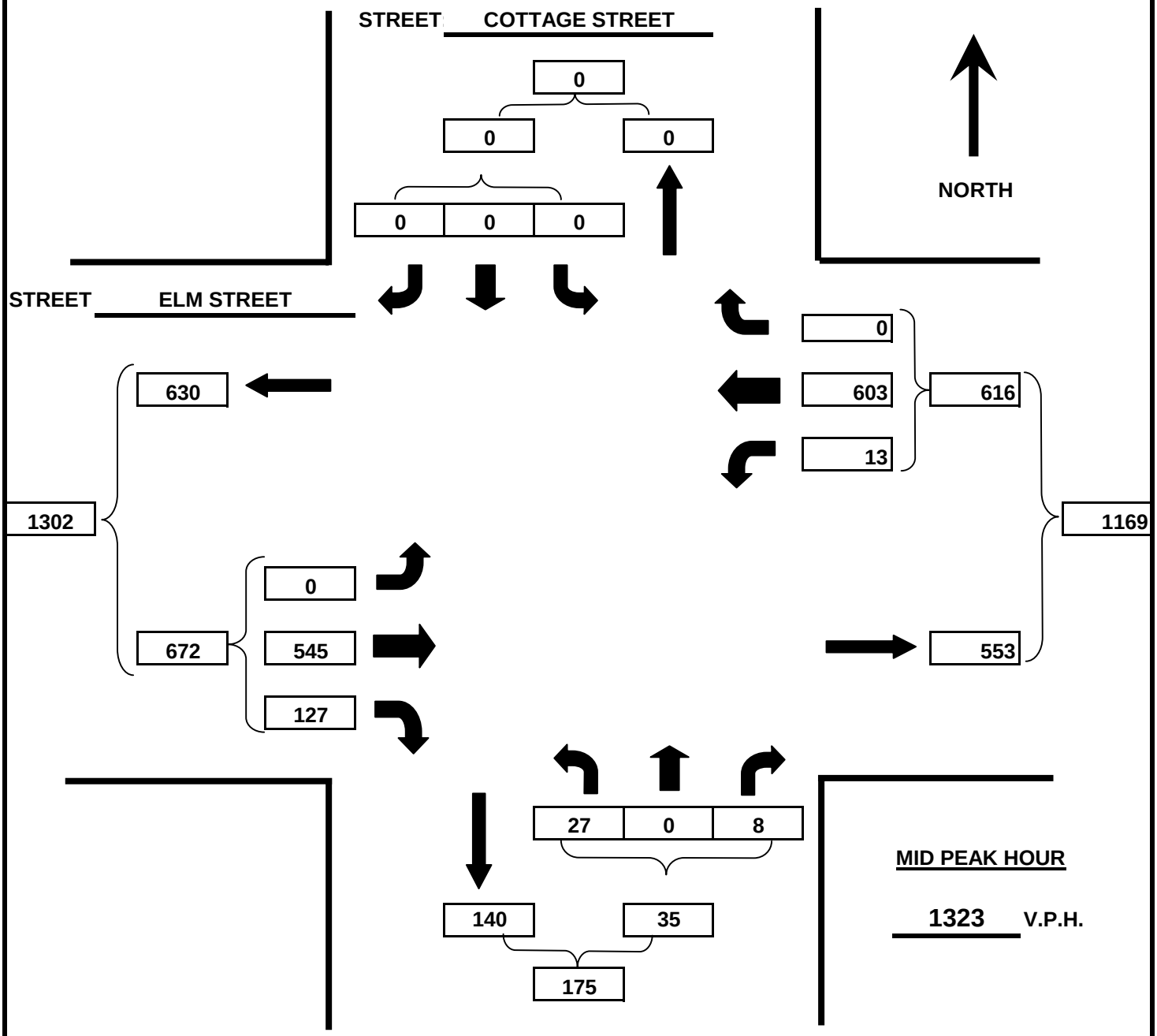

SURVEY DATE 5/13/2006 DAY OF WEEK Saturday WEATHER RAIN

MID PEAK HOUR FROM 11:45 AM TO 12:45 PM

ARCADIS

INTERSECTION SUMMARY

TURNING MOVEMENT COUNT

Project: FLETCHER'S PAINT **Date:** 11/30/2007

Location: ELM STREET & WEST STREET **Job Number:**

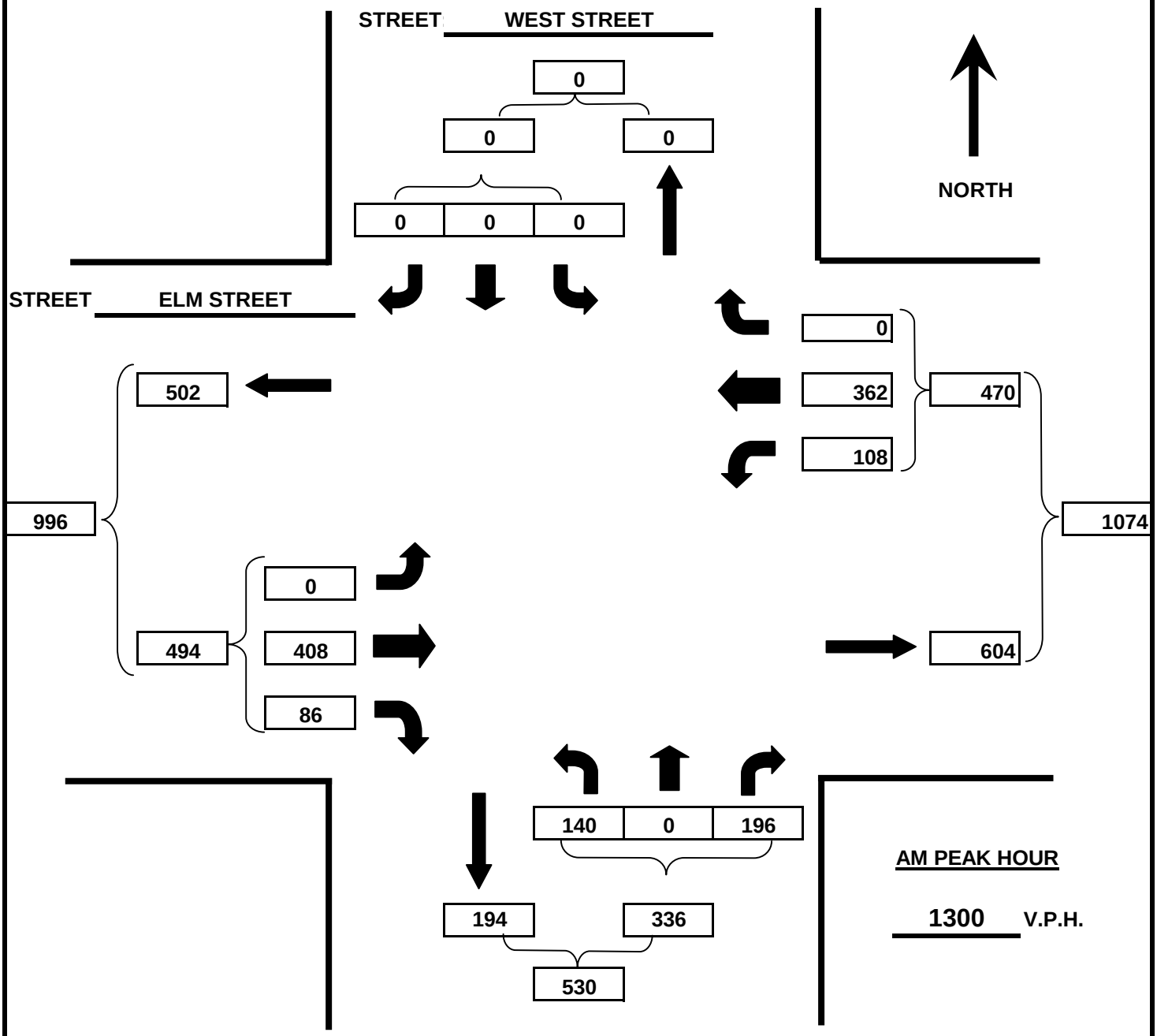

AM PEAK HOUR

1300 V.P.H.

SURVEY DATE 5/2/2006 DAY OF WEEK Tuesday WEATHER RAIN

AM PEAK HOUR FROM 7:15 AM TO 8:15 AM

ARCADIS

INTERSECTION SUMMARY
TURNING MOVEMENT COUNT

Project: FLETCHER'S PAINT **Date:** 11/30/2007

Location: ELM STREET & WEST STREET **Job Number:**

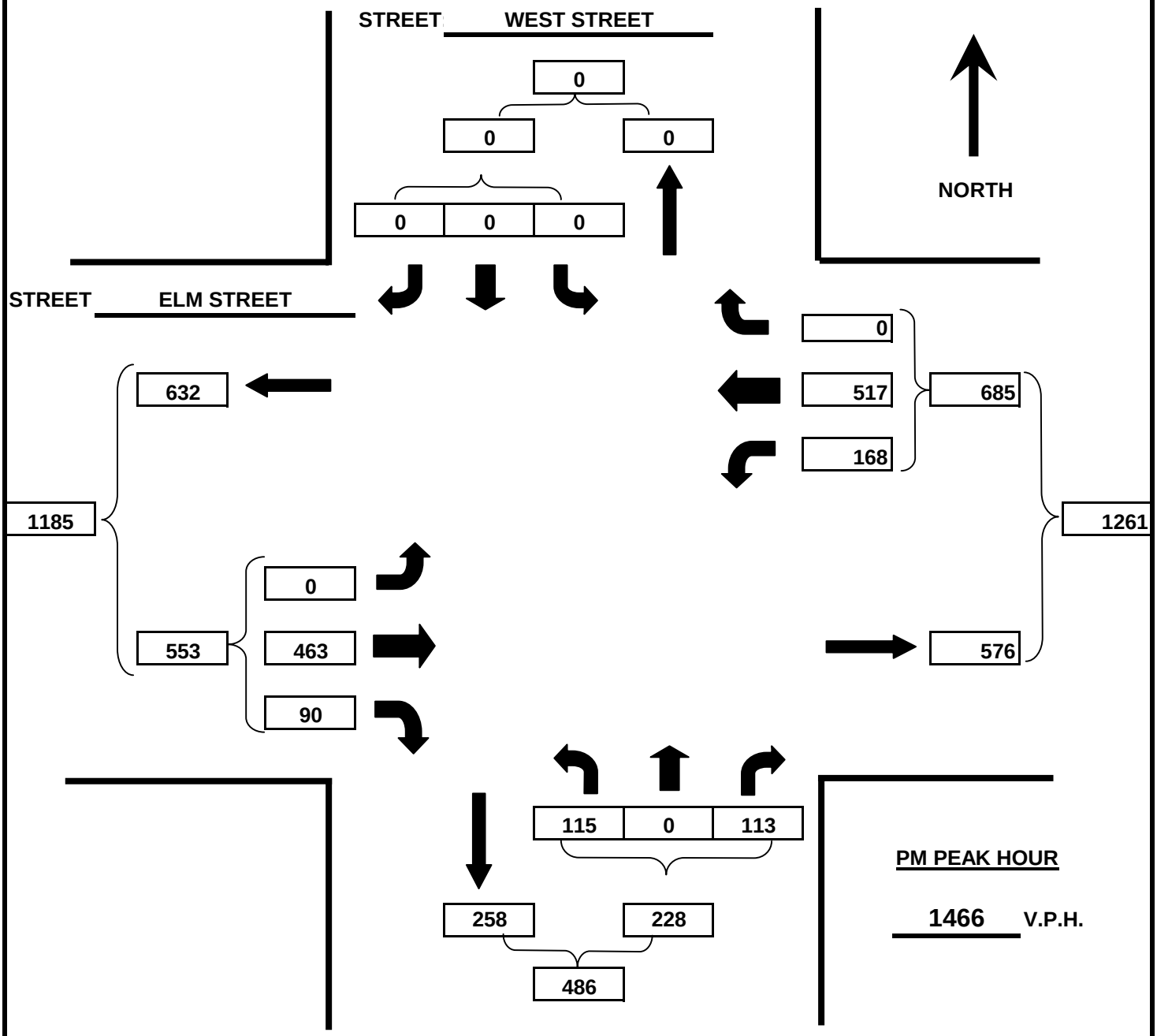

SURVEY DATE 5/2/2006 DAY OF WEEK Tuesday WEATHER RAIN

PM PEAK HOUR FROM 4:30 PM TO 5:30 PM

ARCADIS

INTERSECTION SUMMARY
TURNING MOVEMENT COUNT

Project: FLETCHER'S PAINT **Date:** 11/30/2007

Location: ELM STREET & WEST STREET **Job Number:**

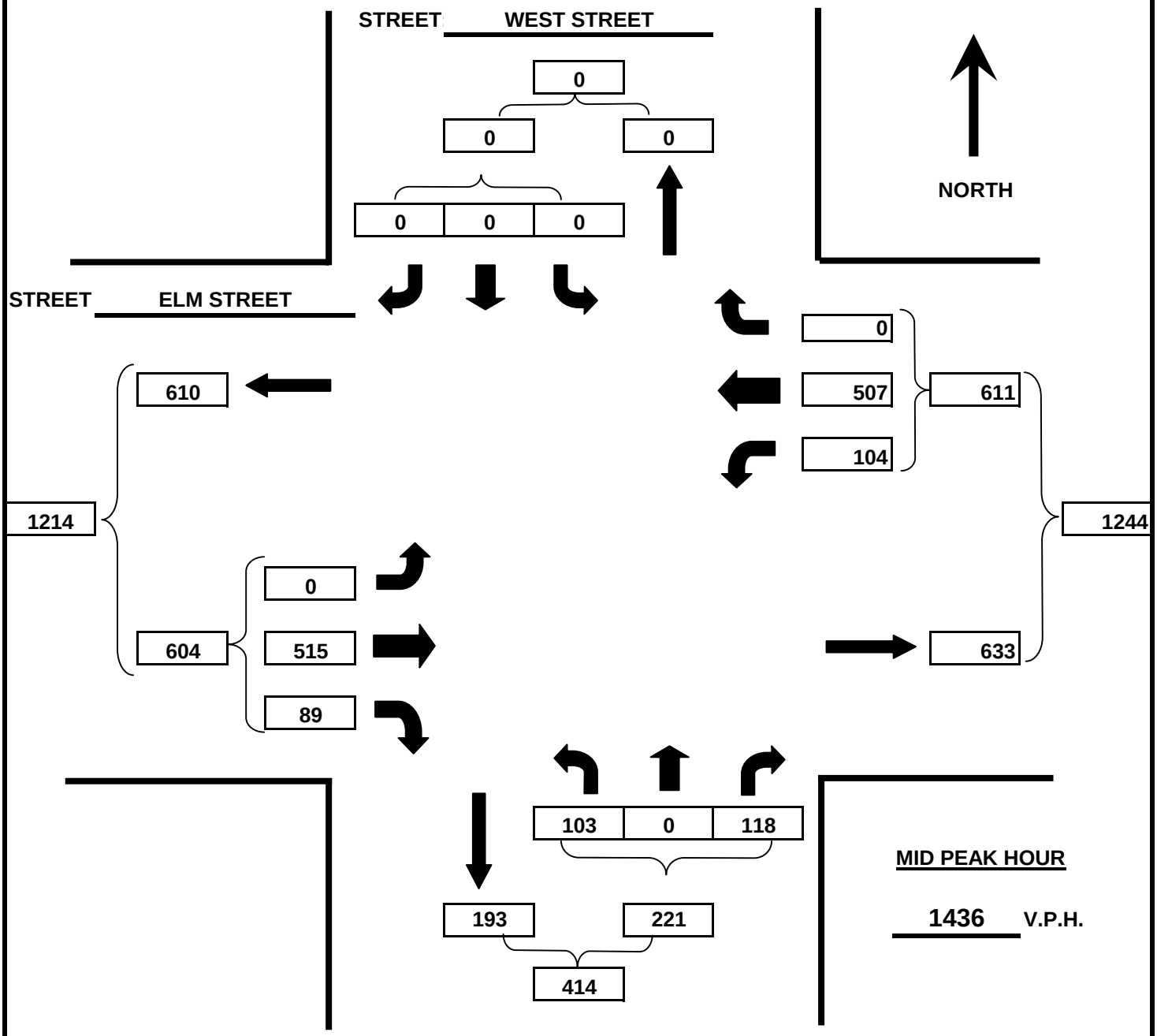

MID PEAK HOUR

1436 V.P.H.

SURVEY DATE 5/13/2006 DAY OF WEEK Saturday WEATHER RAIN

MID PEAK HOUR FROM 11:45 AM TO 12:45 PM

ARCADIS

INTERSECTION SUMMARY
TURNING MOVEMENT COUNT

Project: FLETCHER'S PAINT **Date:** 11/30/2007

Location: ELM STREET & OLD WILTON ROAD **Job Number:**

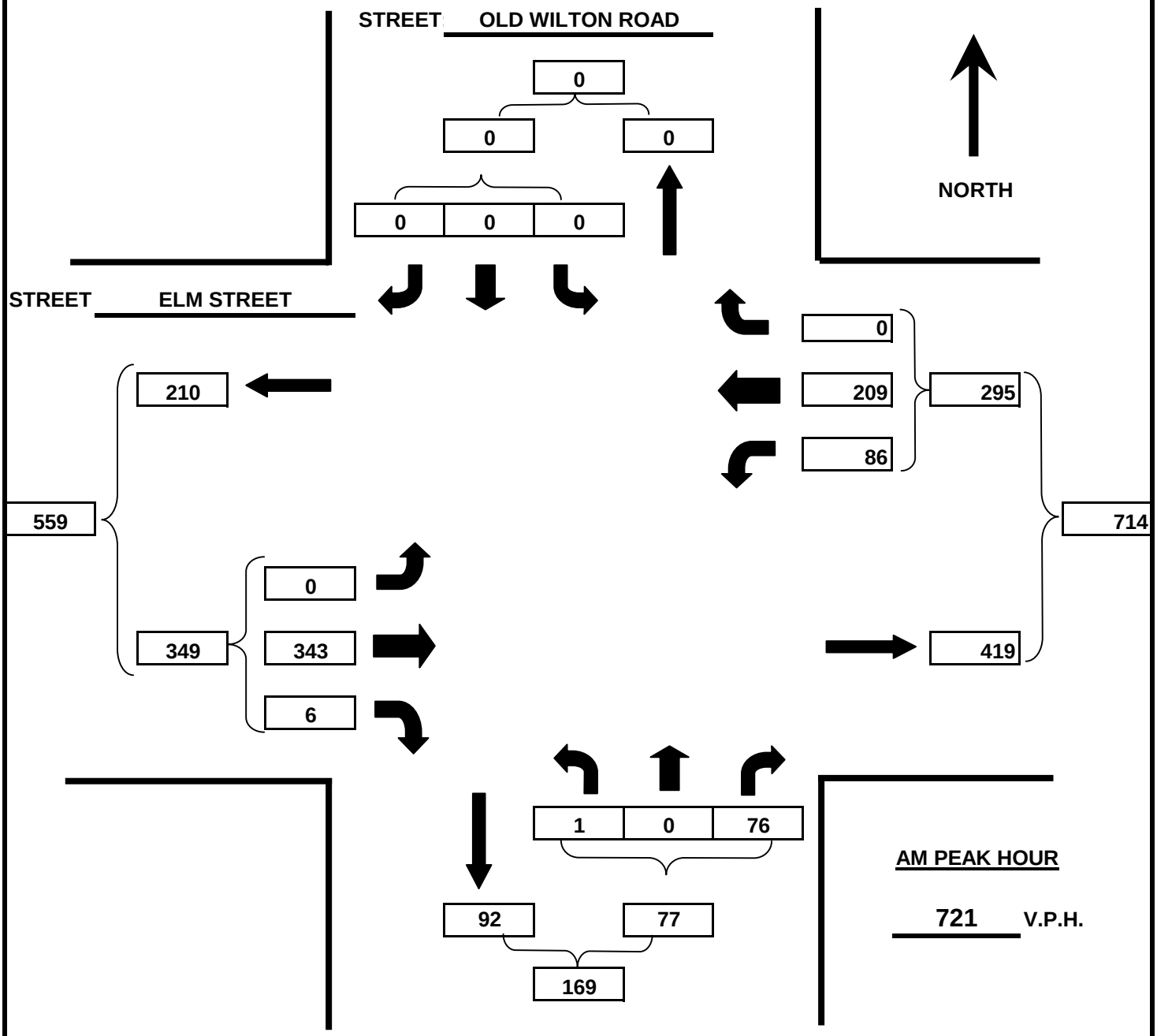

AM PEAK HOUR

721 V.P.H.

SURVEY DATE 5/2/2006 DAY OF WEEK Tuesday WEATHER RAIN

AM PEAK HOUR FROM 7:15 AM TO 8:15 AM

ARCADIS

INTERSECTION SUMMARY
TURNING MOVEMENT COUNT

Project: FLETCHER'S PAINT **Date:** 11/30/2007

Location: ELM STREET & OLD WILTON ROAD **Job Number:**

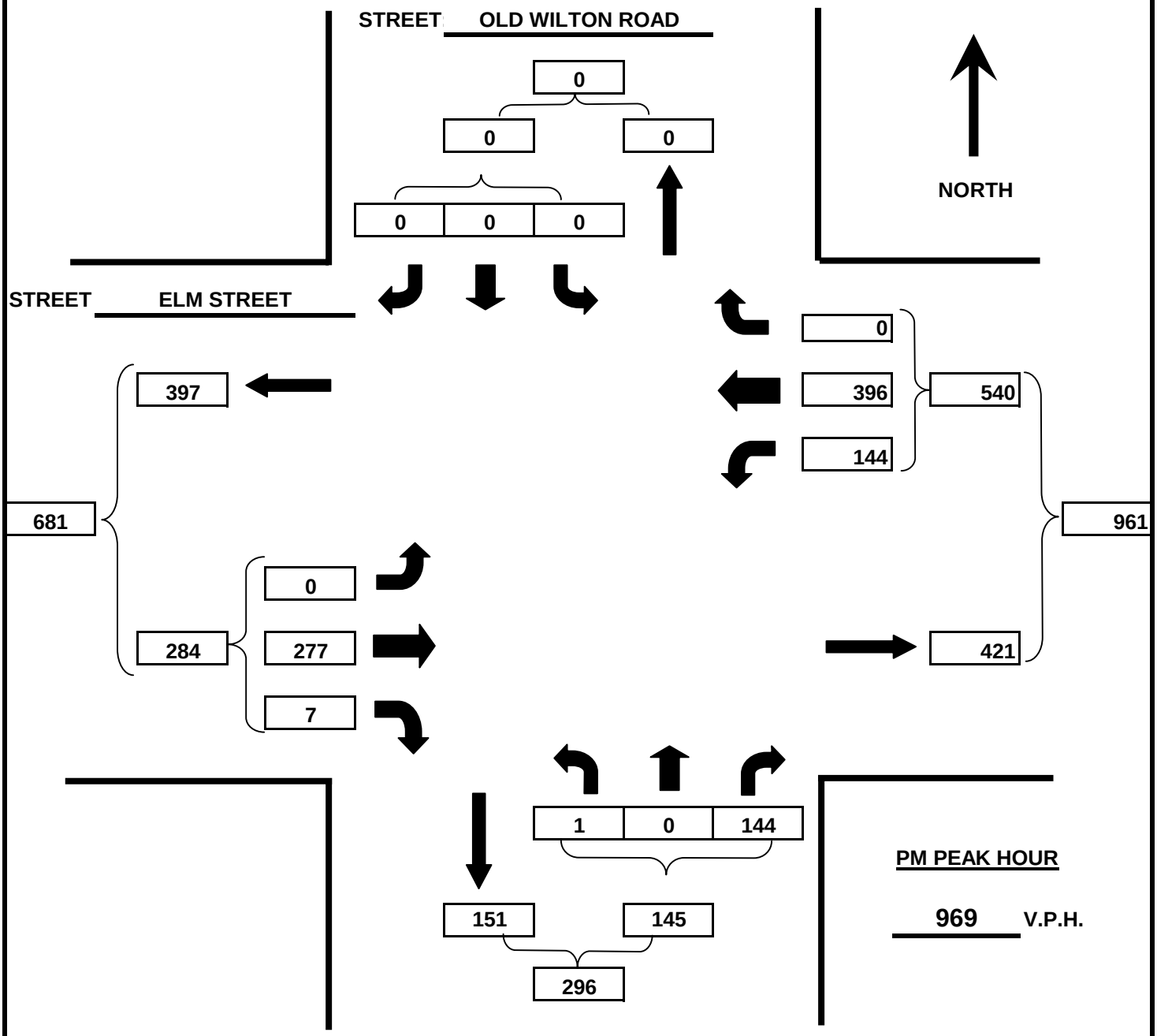

PM PEAK HOUR

969 V.P.H.

SURVEY DATE 5/2/2006 DAY OF WEEK Tuesday WEATHER RAIN

PM PEAK HOUR FROM 4:30 PM TO 5:30 PM

ARCADIS

INTERSECTION SUMMARY

TURNING MOVEMENT COUNT

Project: FLETCHER'S PAINT **Date:** 11/30/2007

Location: ELM STREET & OLD WILTON ROAD **Job Number:**

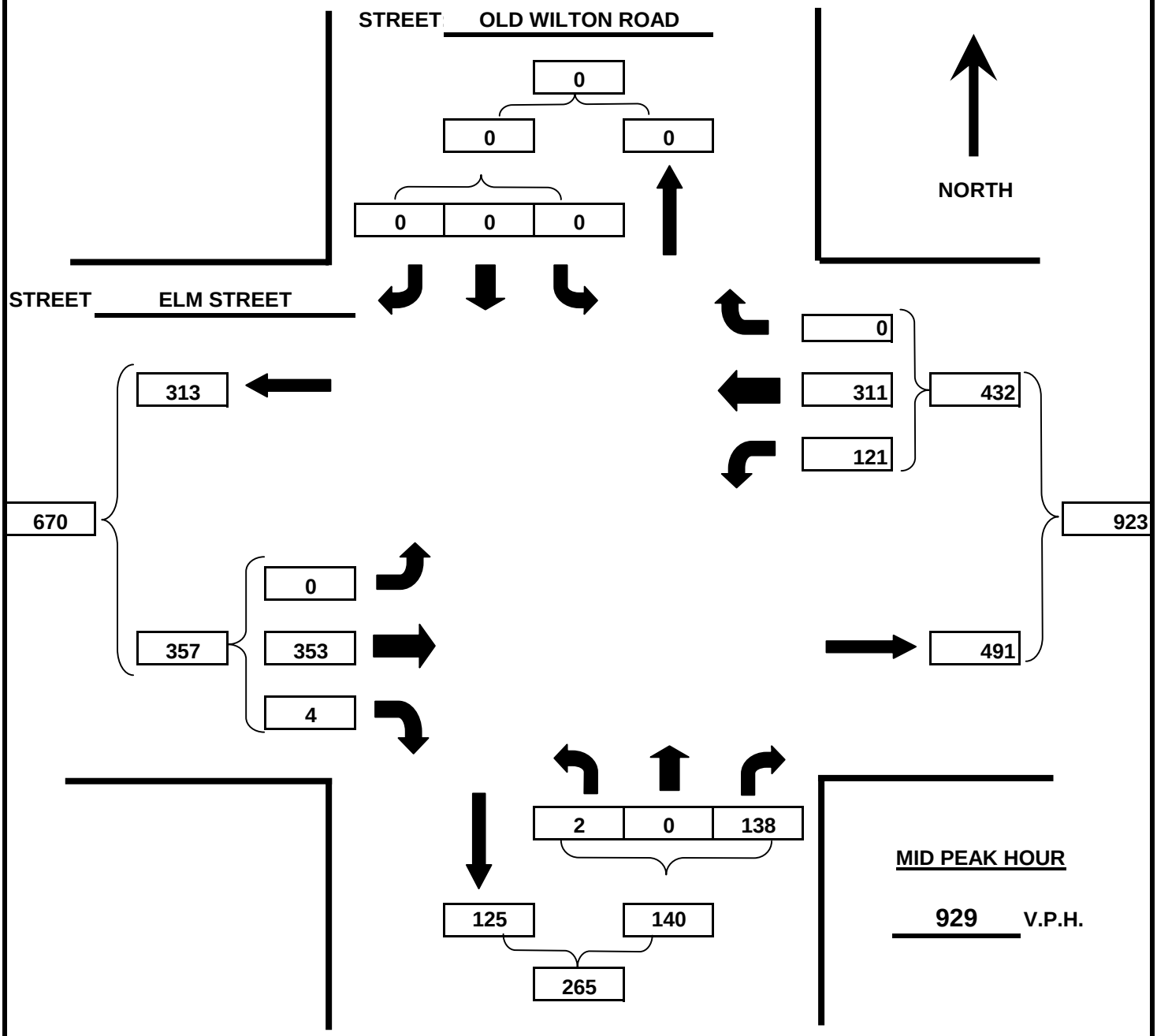

MID PEAK HOUR

929 V.P.H.

SURVEY DATE 5/13/2006 DAY OF WEEK Saturday WEATHER RAIN

MID PEAK HOUR FROM 11:30 AM TO 12:30 PM

ARCADIS

INTERSECTION SUMMARY
TURNING MOVEMENT COUNT

Project: FLETCHER'S PAINT **Date:** 11/30/2007

Location: ELM STREET & N. RIVER ROAD **Job Number:**

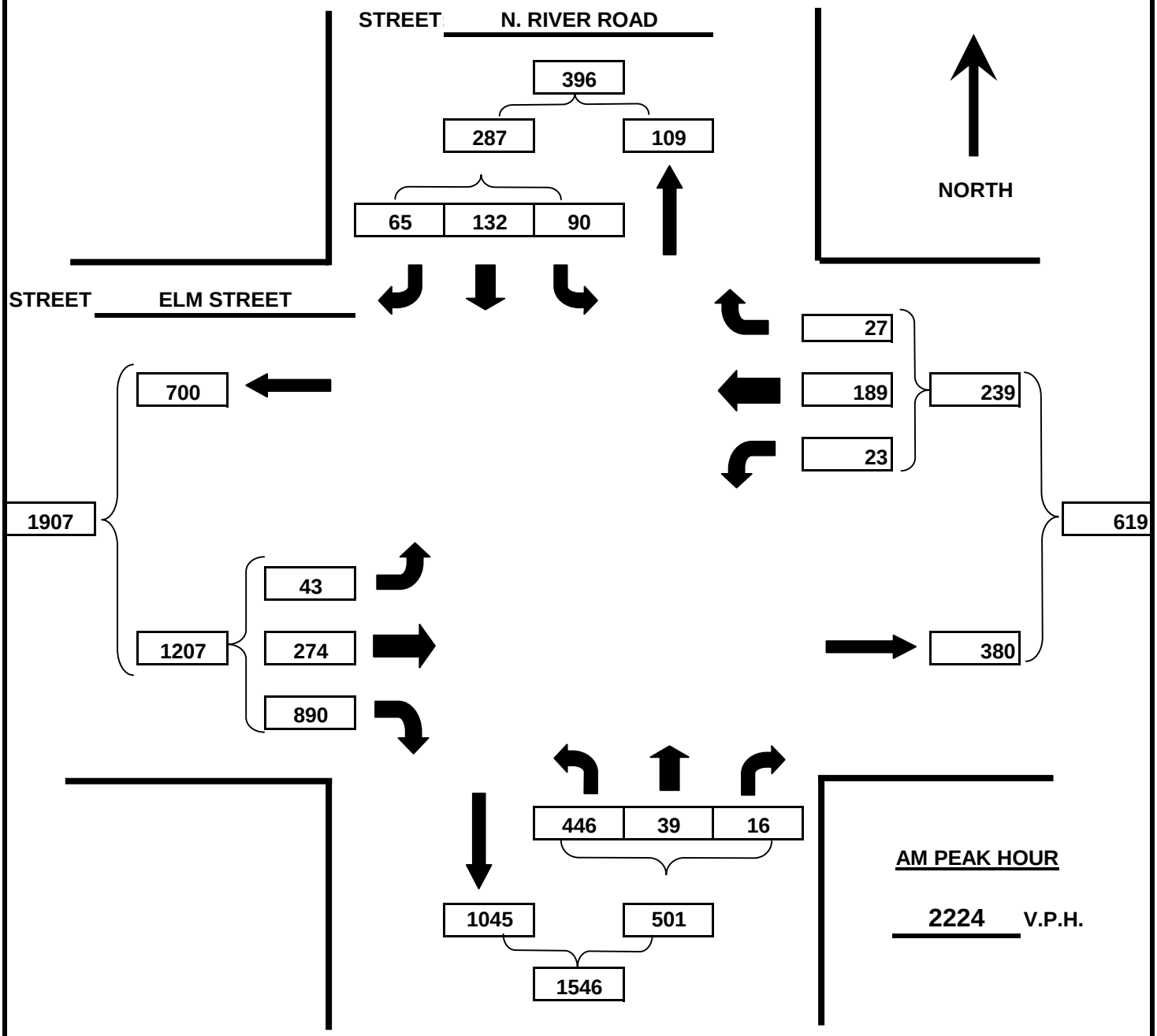

AM PEAK HOUR

2224 V.P.H.

SURVEY DATE 5/2/2006 DAY OF WEEK Tuesday WEATHER RAIN

AM PEAK HOUR FROM 7:15 AM TO 8:15 AM

ARCADIS

INTERSECTION SUMMARY
TURNING MOVEMENT COUNT

Project: FLETCHER'S PAINT **Date:** 11/30/2007

Location: ELM STREET & N. RIVER ROAD **Job Number:**

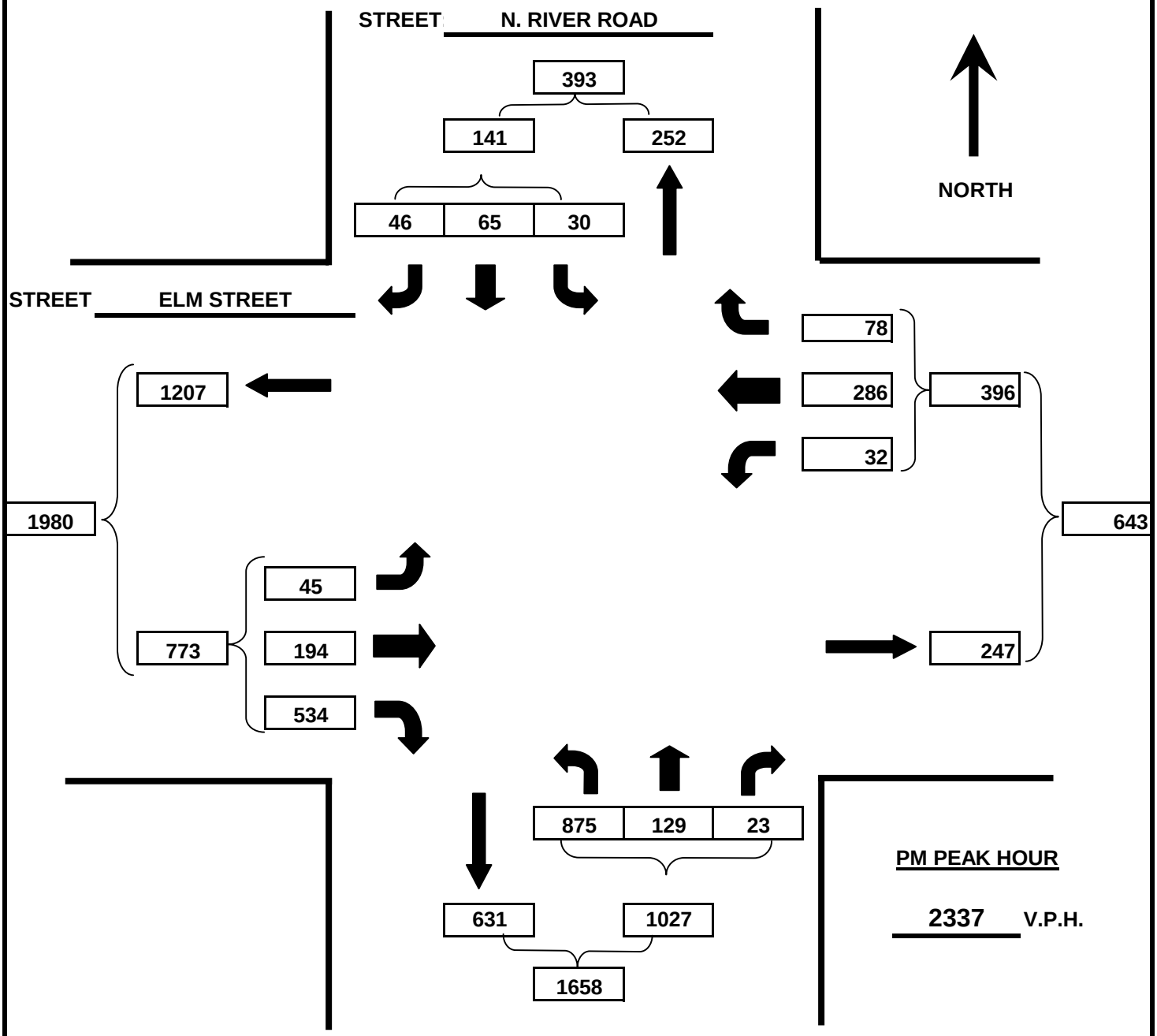

PM PEAK HOUR

2337 V.P.H.

SURVEY DATE 5/2/2006 DAY OF WEEK Tuesday WEATHER RAIN

PM PEAK HOUR FROM 5:00 PM TO 6:00 PM

ARCADIS

INTERSECTION SUMMARY

TURNING MOVEMENT COUNT

Project: FLETCHER'S PAINT **Date:** 11/30/2007

Location: ELM STREET & N. RIVER ROAD **Job Number:**

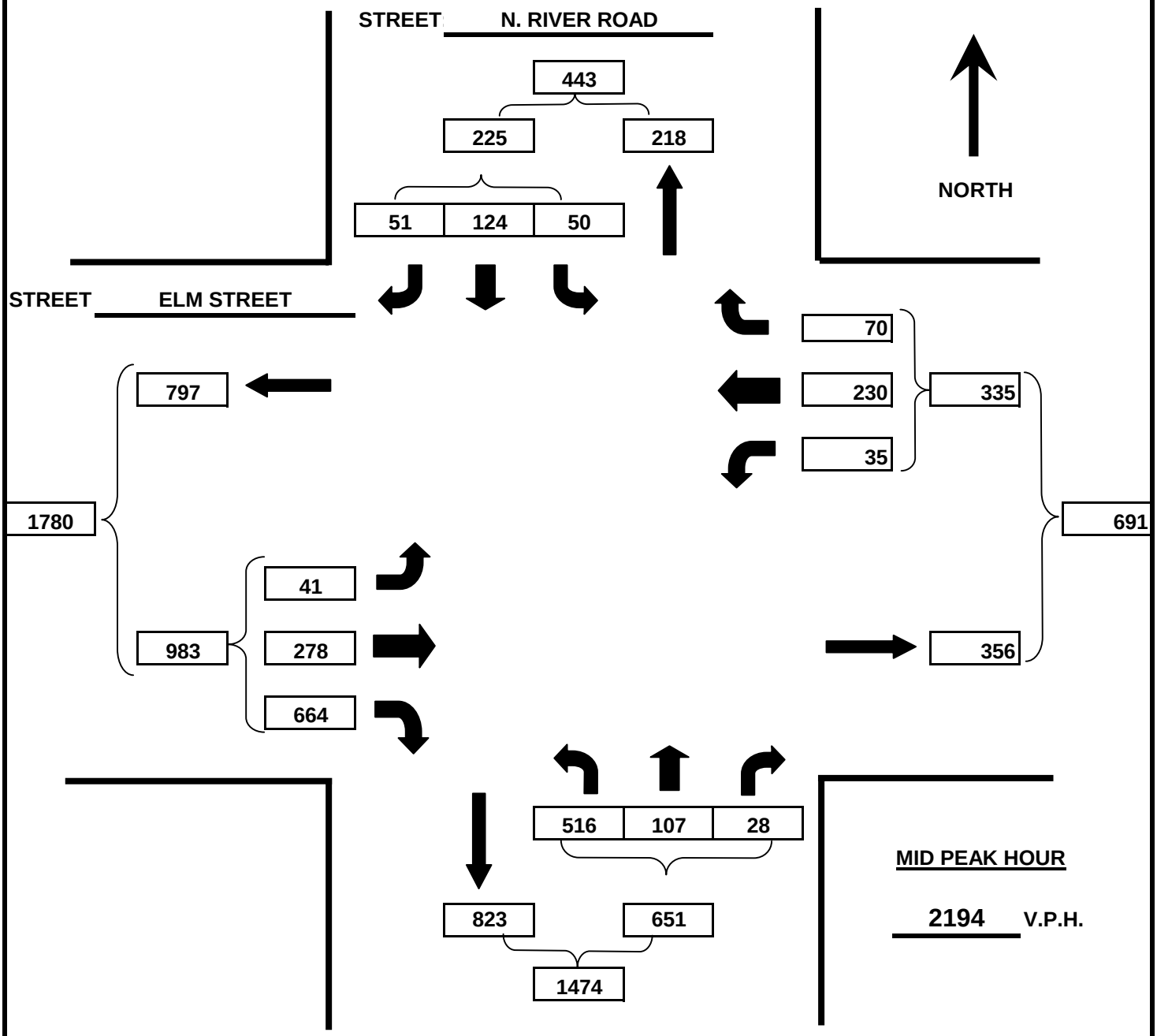

MID PEAK HOUR

2194 V.P.H.

SURVEY DATE 5/13/2006 DAY OF WEEK Saturday WEATHER RAIN

MID PEAK HOUR FROM 11:00 AM TO 12:00 PM

ARCADIS

INTERSECTION SUMMARY
TURNING MOVEMENT COUNT

Project: FLETCHER'S PAINT **Date:** 11/30/2007

Location: ROUTE 13 & LINCOLN STREET **Job Number:**

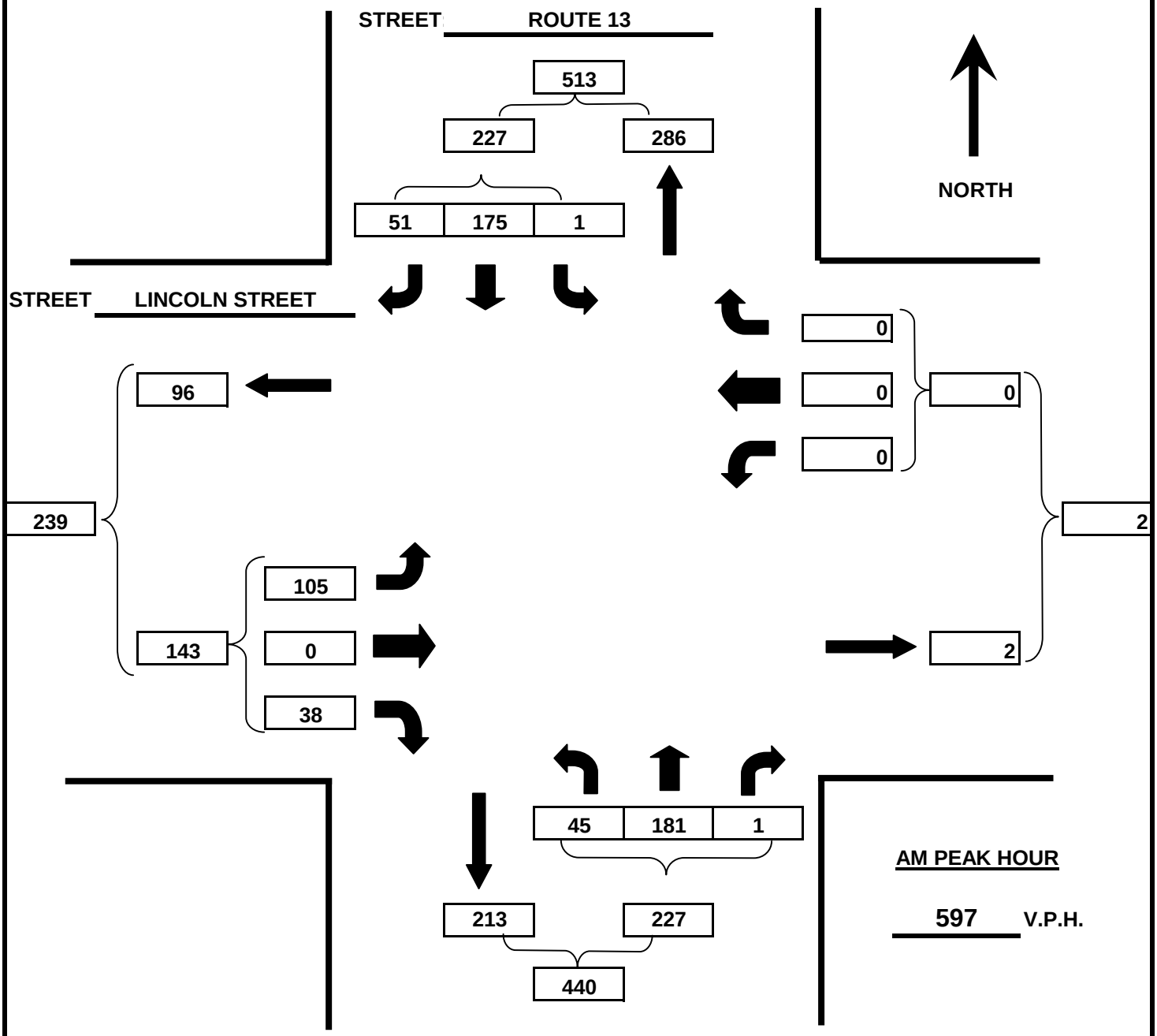

SURVEY DATE 5/4/2006 DAY OF WEEK Thursday WEATHER CLOUDY

AM PEAK HOUR FROM 7:15 AM TO 8:15 AM

ARCADIS

INTERSECTION SUMMARY
TURNING MOVEMENT COUNT

Project: FLETCHER'S PAINT **Date:** 11/30/2007

Location: ROUTE 13 & LINCOLN STREET **Job Number:**

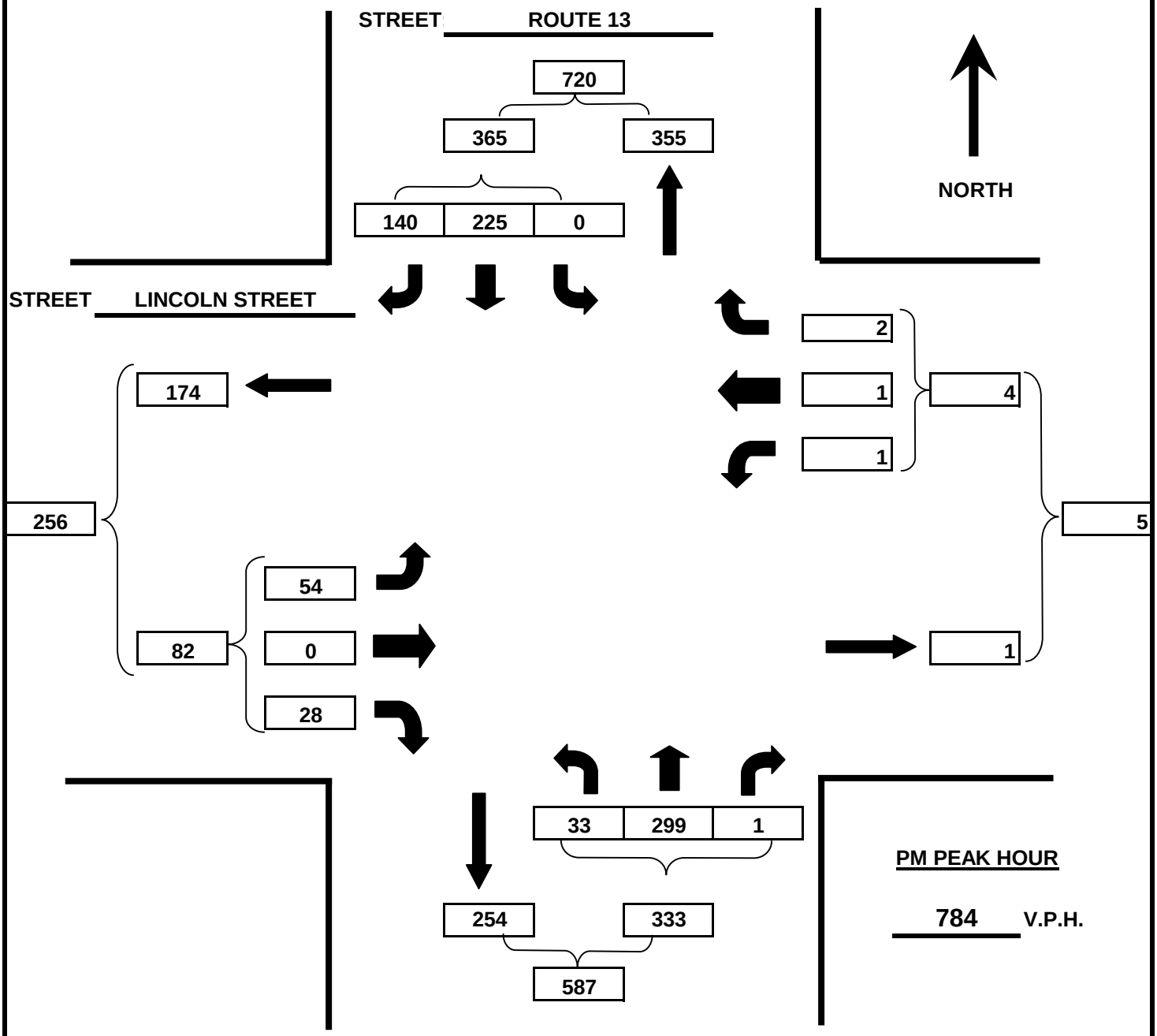

PM PEAK HOUR

784 V.P.H.

SURVEY DATE 5/10/2006 DAY OF WEEK Wednesday WEATHER RAIN

PM PEAK HOUR FROM 4:00 PM TO 5:00 PM

ARCADIS

INTERSECTION SUMMARY
TURNING MOVEMENT COUNT

Project: FLETCHER'S PAINT **Date:** 11/30/2007

Location: ROUTE 13 & LINCOLN STREET **Job Number:**

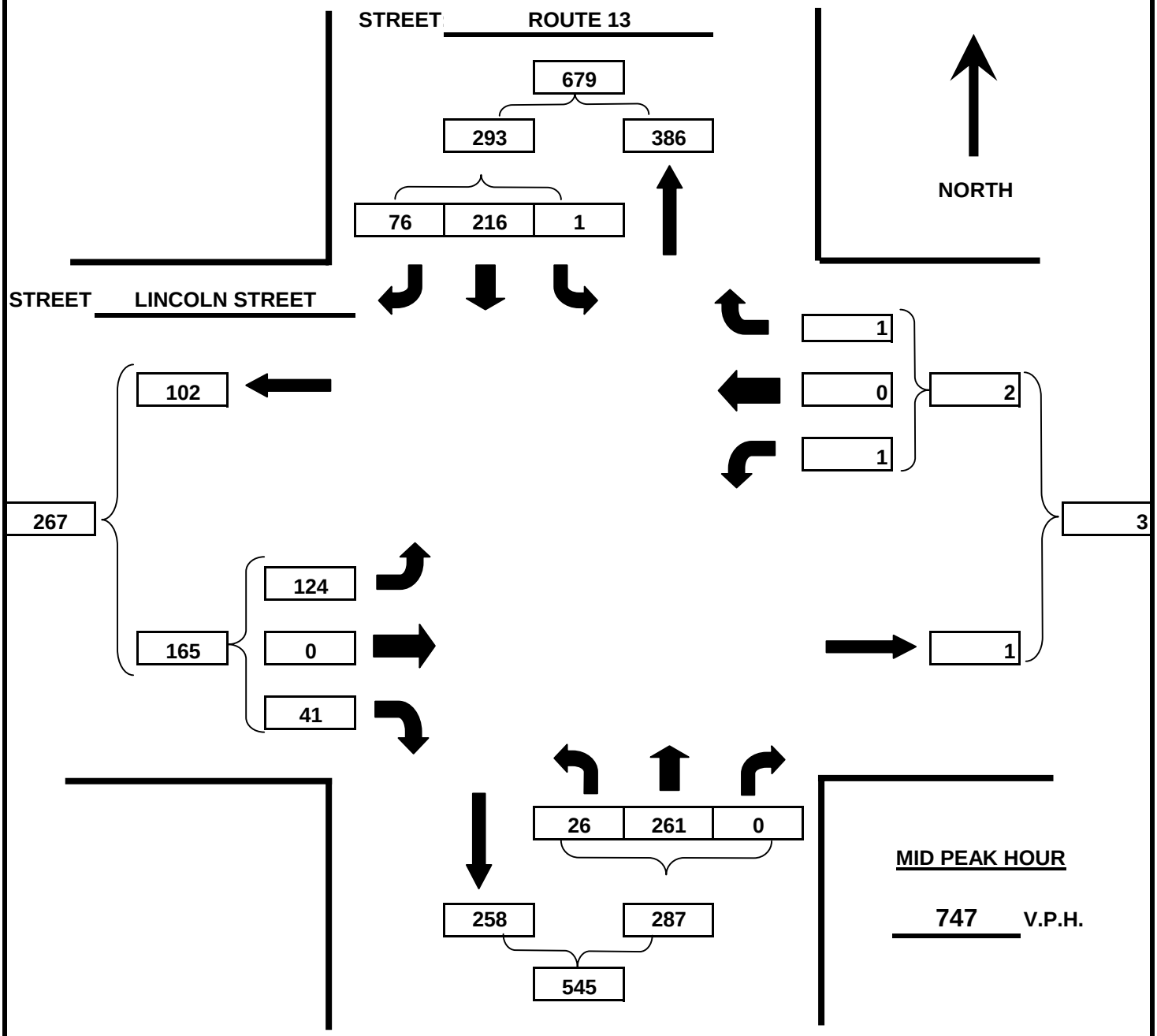

MID PEAK HOUR

747 V.P.H.

SURVEY DATE 5/13/2006 DAY OF WEEK Saturday WEATHER RAIN

MID PEAK HOUR FROM 11:00 AM TO 12:00 PM

ARCADIS

INTERSECTION SUMMARY
TURNING MOVEMENT COUNT

Project: FLETCHER'S PAINT **Date:** 11/30/2007

Location: OSGOOD ROAD & MASON ROAD **Job Number:**

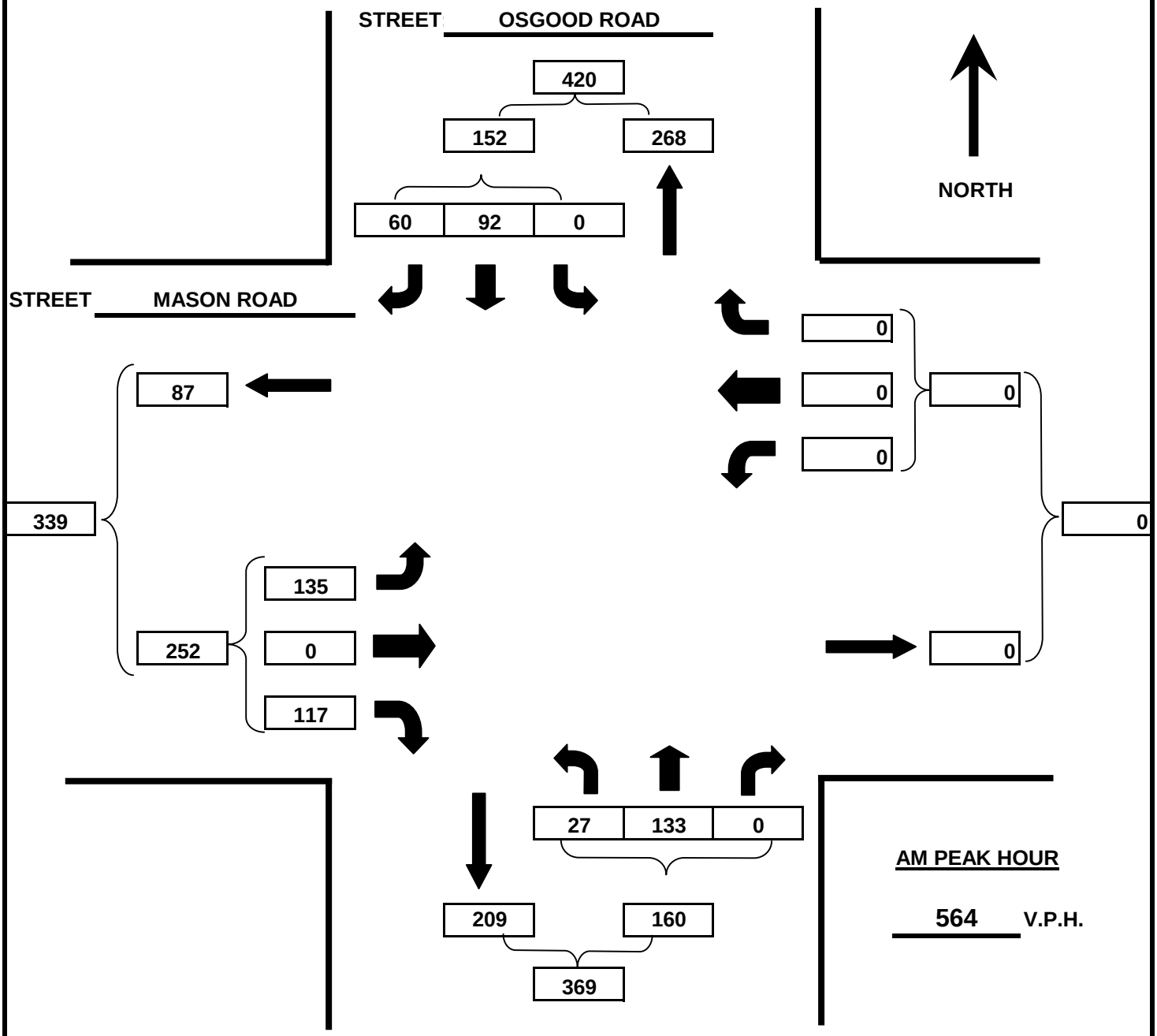

AM PEAK HOUR

564 V.P.H.

SURVEY DATE 5/2/2006 DAY OF WEEK Tuesday WEATHER RAIN

AM PEAK HOUR FROM 7:00 AM TO 8:00 AM

ARCADIS

INTERSECTION SUMMARY
TURNING MOVEMENT COUNT

Project: FLETCHER'S PAINT **Date:** 11/30/2007

Location: OSGOOD ROAD & MASON ROAD **Job Number:**

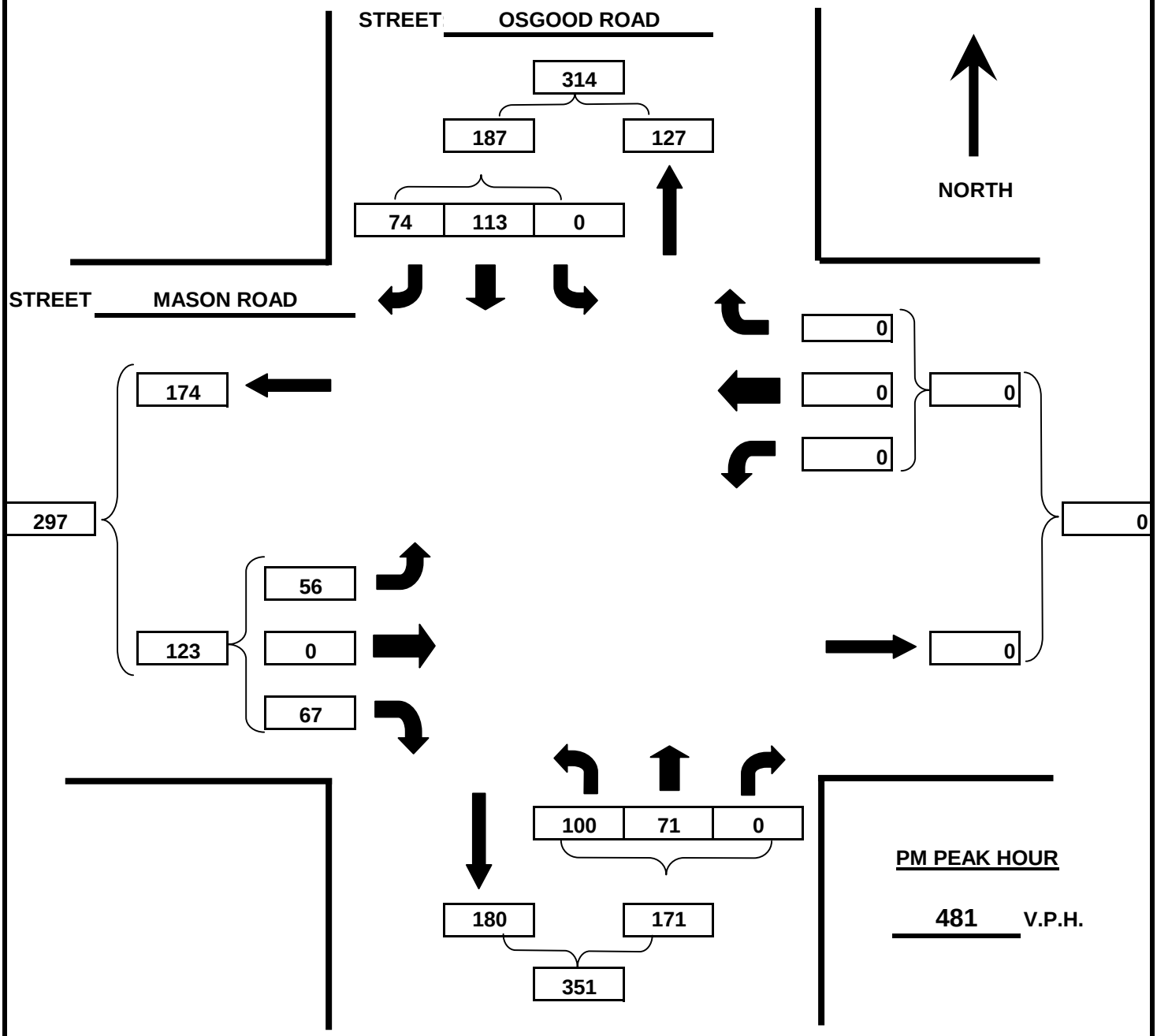

SURVEY DATE 5/2/2006 DAY OF WEEK Tuesday WEATHER RAIN

PM PEAK HOUR FROM 4:30 PM TO 5:30 PM

ARCADIS

INTERSECTION SUMMARY

TURNING MOVEMENT COUNT

Project: FLETCHER'S PAINT **Date:** 11/30/2007

Location: OSGOOD ROAD & MASON ROAD **Job Number:**

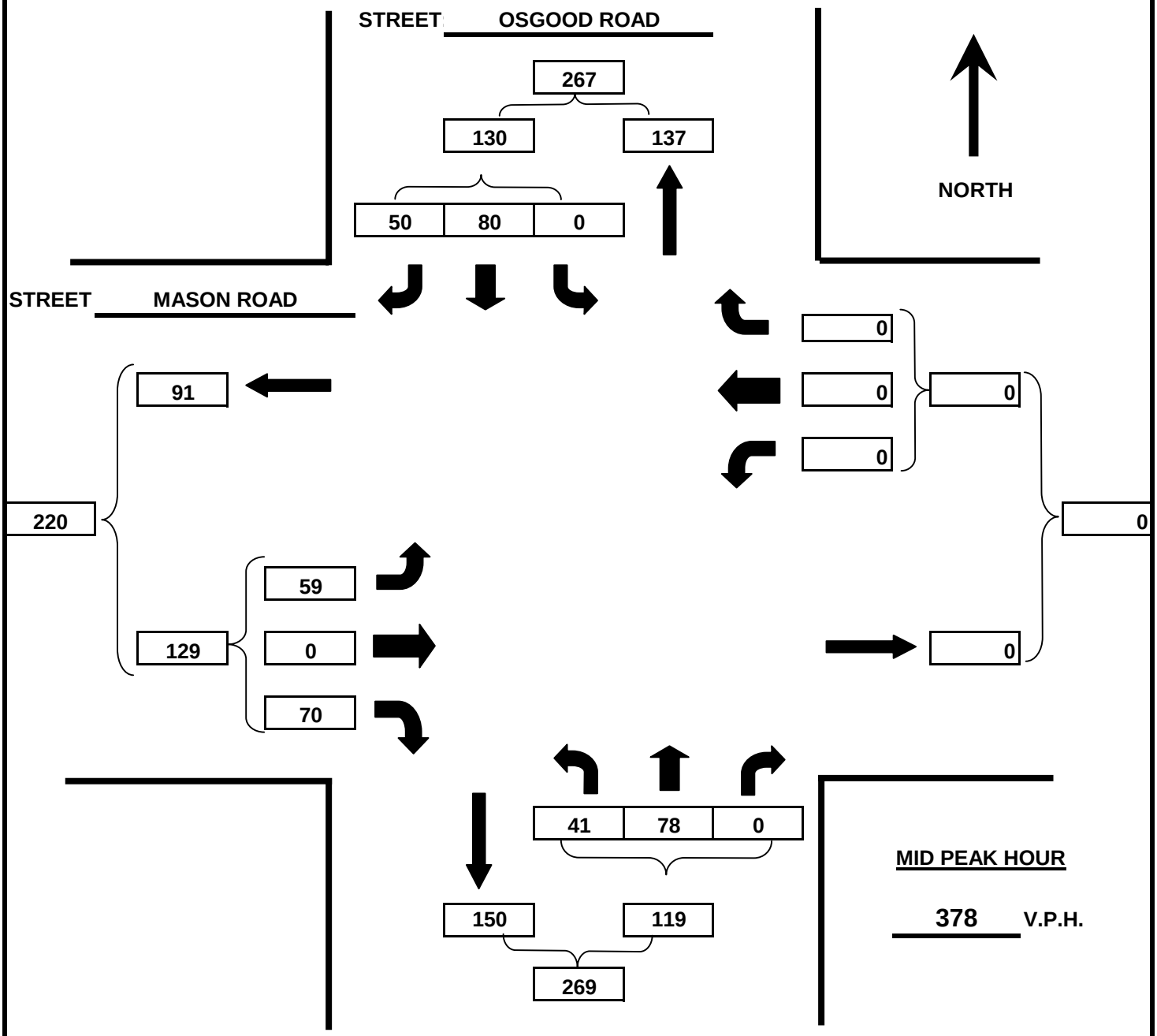

MID PEAK HOUR

378 V.P.H.

SURVEY DATE 5/13/2006 DAY OF WEEK Saturday WEATHER RAIN

MID PEAK HOUR FROM 1:00 PM TO 2:00 PM

ARCADIS

INTERSECTION SUMMARY
TURNING MOVEMENT COUNT

Project: FLETCHER'S PAINT **Date:** 11/30/2007

Location: KNIGHT STREET & WEST STREET **Job Number:**

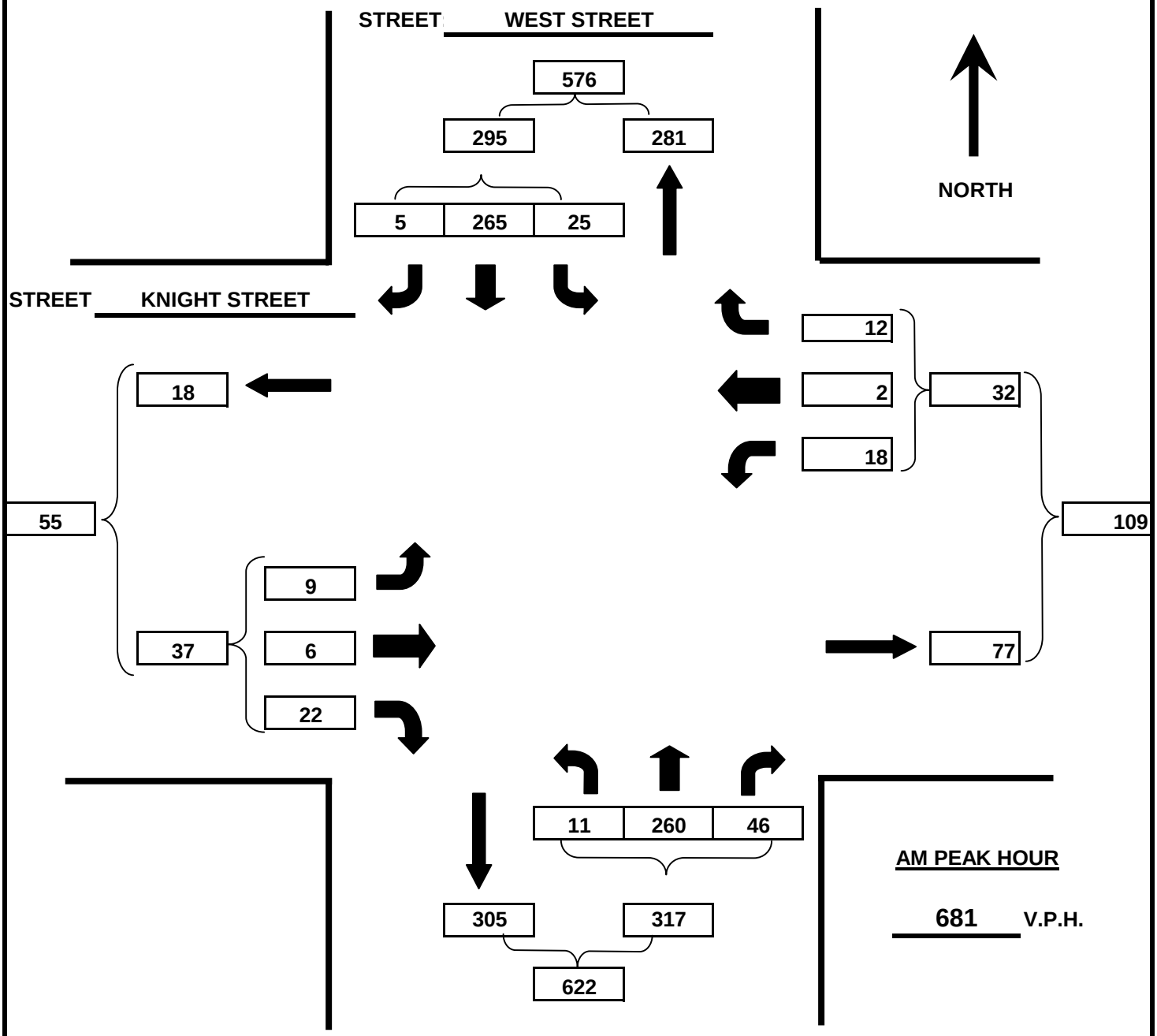

AM PEAK HOUR

681 V.P.H.

SURVEY DATE 11/15/2007 DAY OF WEEK Thursday WEATHER RAIN

AM PEAK HOUR FROM 7:00 AM TO 8:00 AM

ARCADIS

INTERSECTION SUMMARY
TURNING MOVEMENT COUNT

Project: FLETCHER'S PAINT **Date:** 11/30/2007

Location: KNIGHT STREET & WEST STREET **Job Number:**

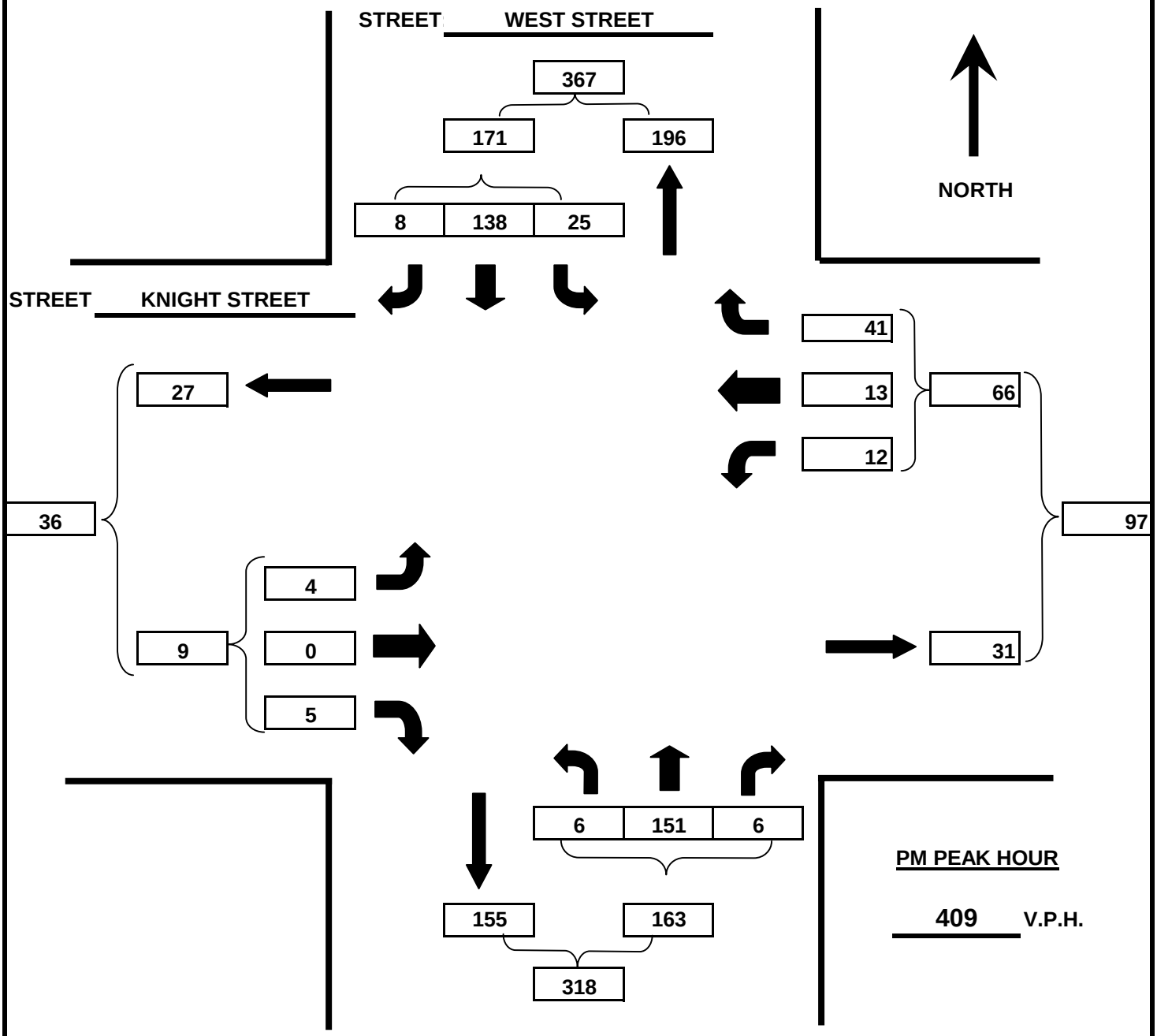

PM PEAK HOUR

409 V.P.H.

SURVEY DATE 11/14/2007 DAY OF WEEK Wednesday WEATHER CLEAR

PM PEAK HOUR FROM 5:00 PM TO 6:00 PM

ARCADIS

INTERSECTION SUMMARY
TURNING MOVEMENT COUNT

Project: FLETCHER'S PAINT **Date:** 11/30/2007

Location: KNIGHT STREET & WEST STREET **Job Number:**

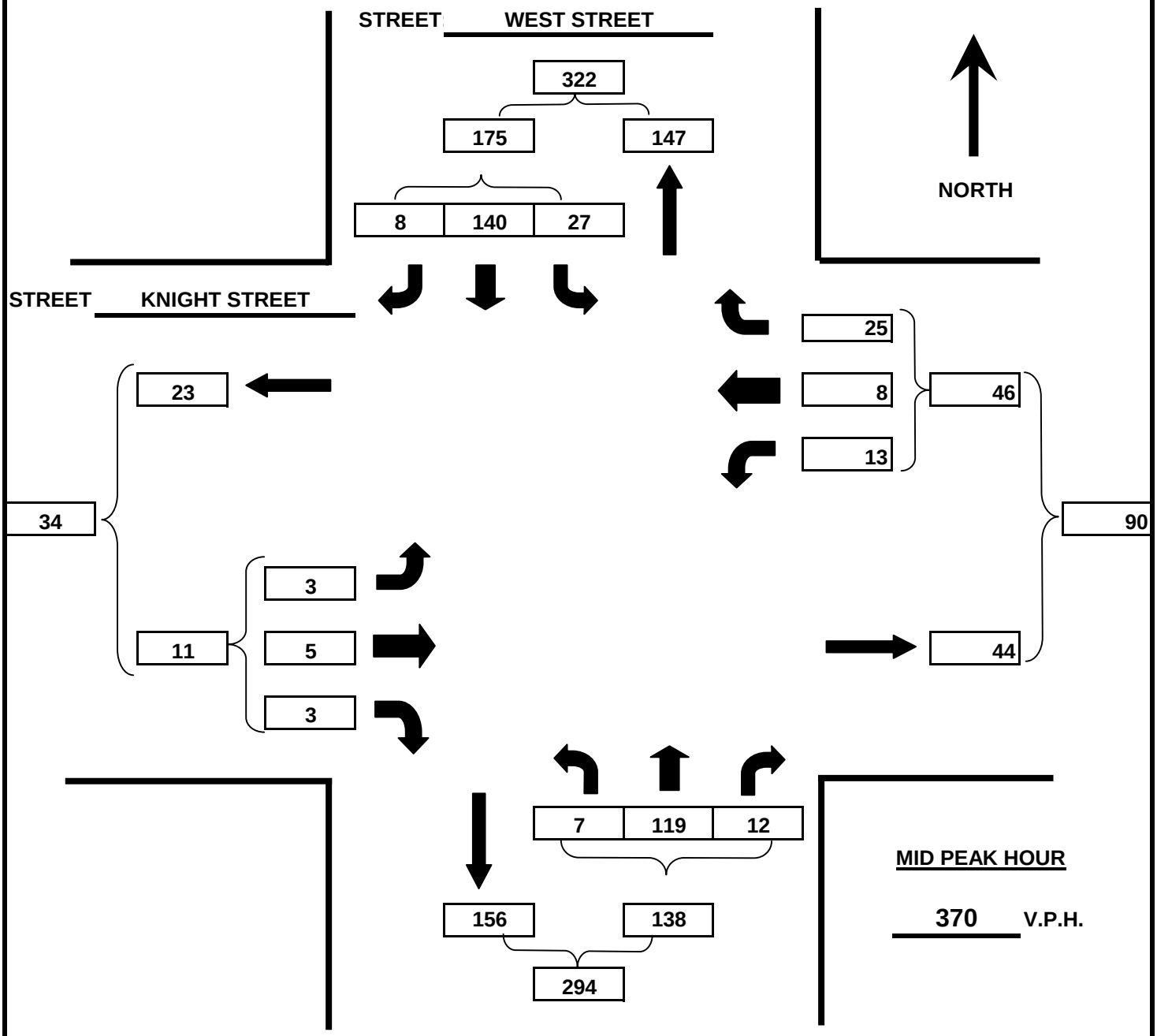

MID PEAK HOUR

370 V.P.H.

SURVEY DATE 11/10/2007 DAY OF WEEK Saturday WEATHER CLEAR

MID PEAK HOUR FROM 11:30 AM TO 12:30 PM

ARCADIS

Attachment B-2

Projected (2009) Existing
Intersection Summaries

INTERSECTION SUMMARY

TURNING MOVEMENT COUNT

Project: FLETCHER'S PAINT **Date:** 11/30/2007

Location: ELM STREET & COTTAGE STREET **Job Number:**

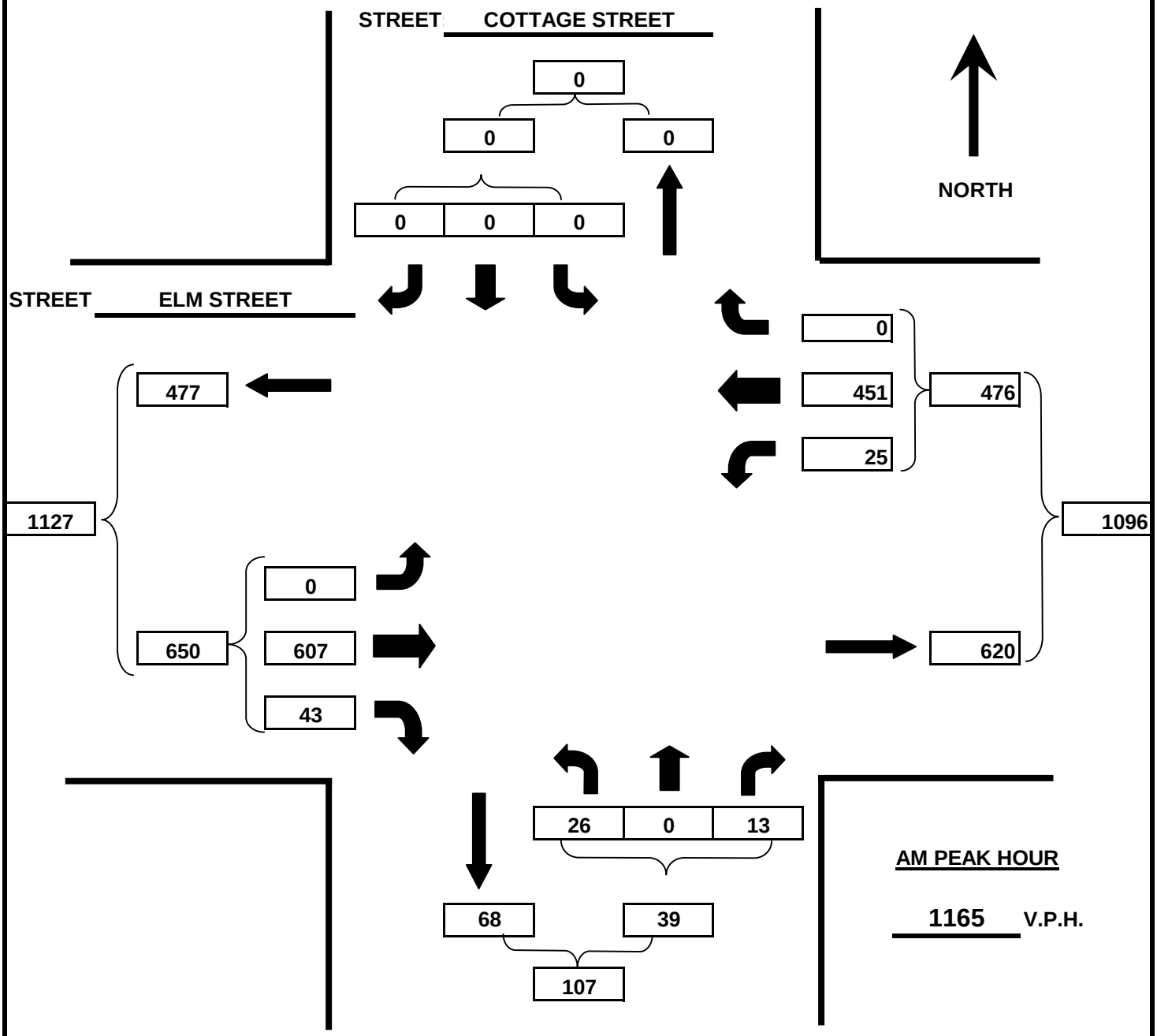

AM PEAK HOUR

1165 V.P.H.

SURVEY DATE 2009 DAY OF WEEK WEATHER

AM PEAK HOUR FROM 7:15 AM TO 8:15 AM

ARCADIS

INTERSECTION SUMMARY
TURNING MOVEMENT COUNT

Project: FLETCHER'S PAINT **Date:** 11/30/2007

Location: ELM STREET & COTTAGE STREET **Job Number:**

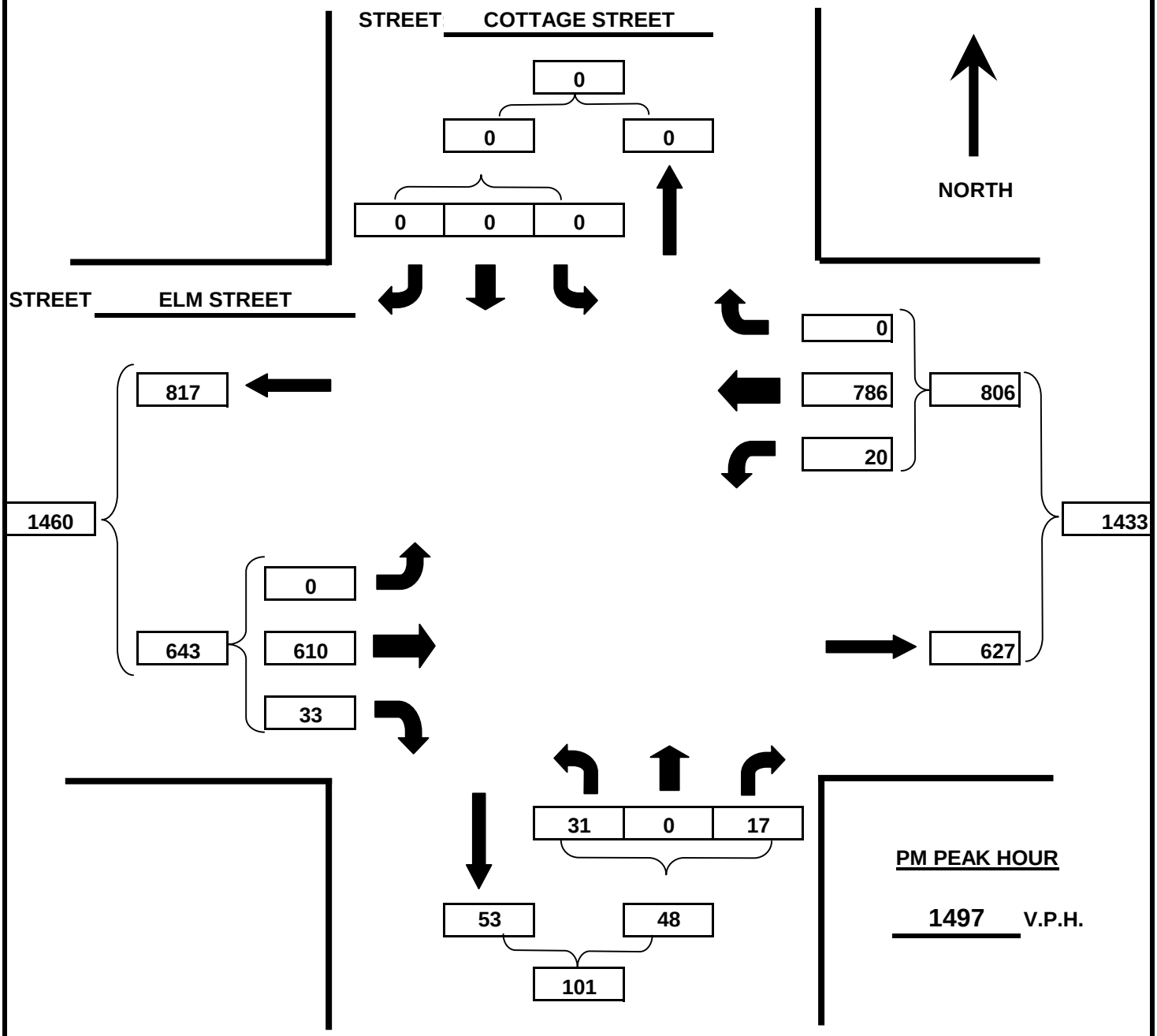

PM PEAK HOUR

1497 V.P.H.

SURVEY DATE 2009 DAY OF WEEK WEATHER

PM PEAK HOUR FROM 5:00 PM TO 6:00 PM

ARCADIS

INTERSECTION SUMMARY

TURNING MOVEMENT COUNT

Project: FLETCHER'S PAINT **Date:** 11/30/2007

Location: ELM STREET & COTTAGE STREET **Job Number:**

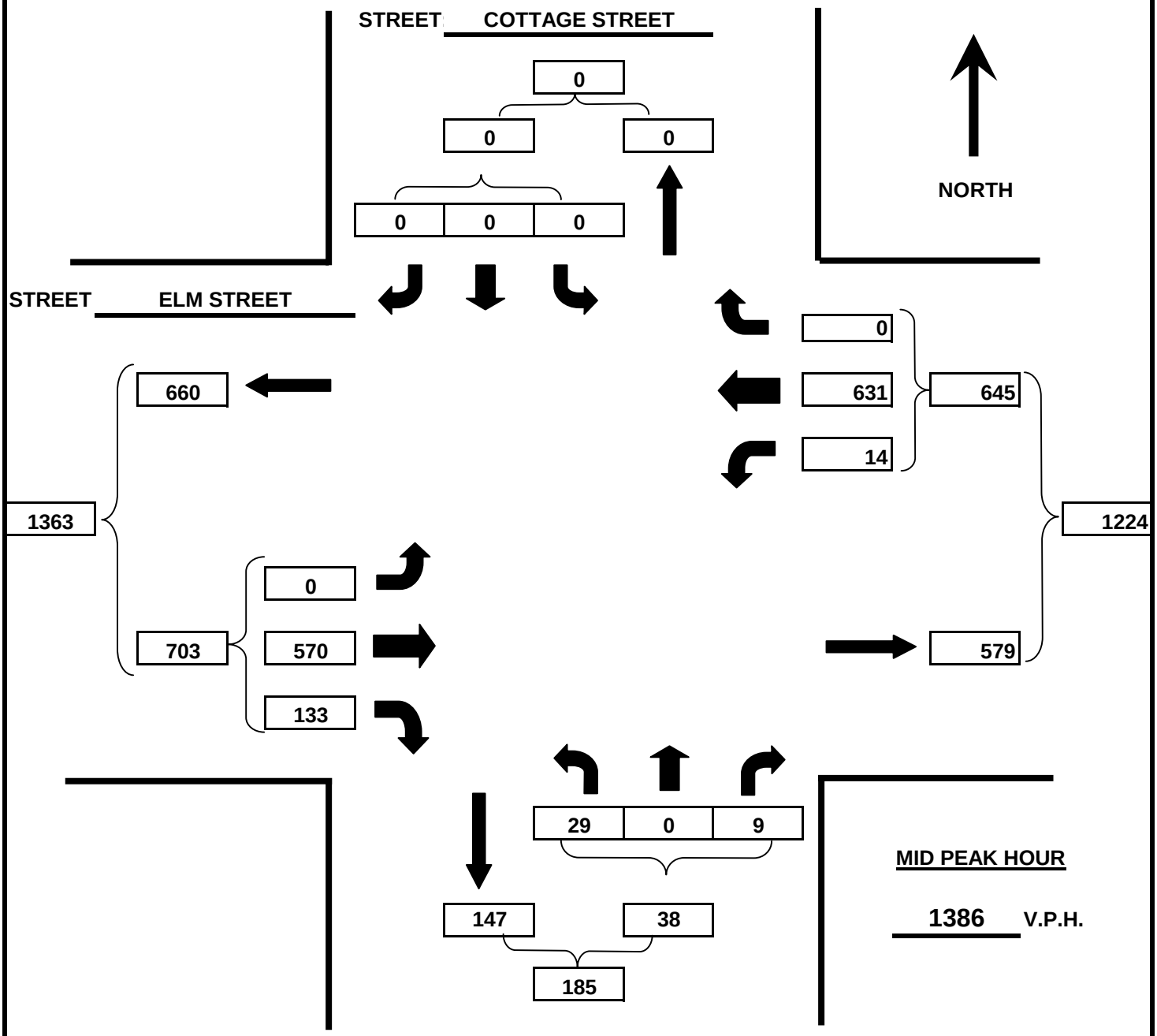

MID PEAK HOUR

1386 V.P.H.

SURVEY DATE 2009 DAY OF WEEK Saturday WEATHER

MID PEAK HOUR FROM 11:45 AM TO 12:45 PM

ARCADIS

INTERSECTION SUMMARY
TURNING MOVEMENT COUNT

Project: FLETCHER'S PAINT **Date:** 11/30/2007

Location: ELM STREET & WEST STREET **Job Number:**

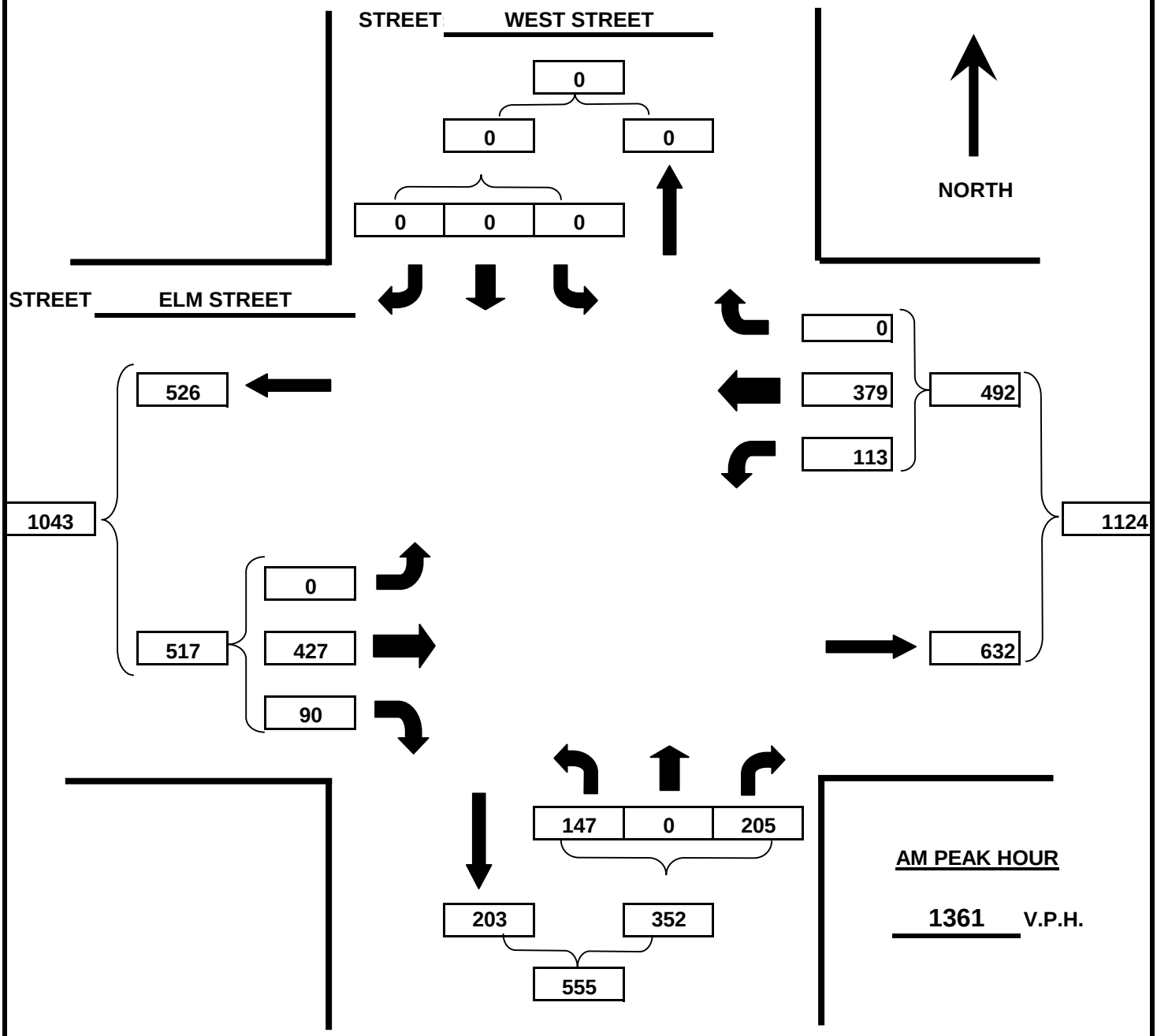

SURVEY DATE 2009 DAY OF WEEK WEATHER

AM PEAK HOUR FROM 7:15 AM TO 8:15 AM

ARCADIS

INTERSECTION SUMMARY
TURNING MOVEMENT COUNT

Project: FLETCHER'S PAINT **Date:** 11/30/2007

Location: ELM STREET & WEST STREET **Job Number:**

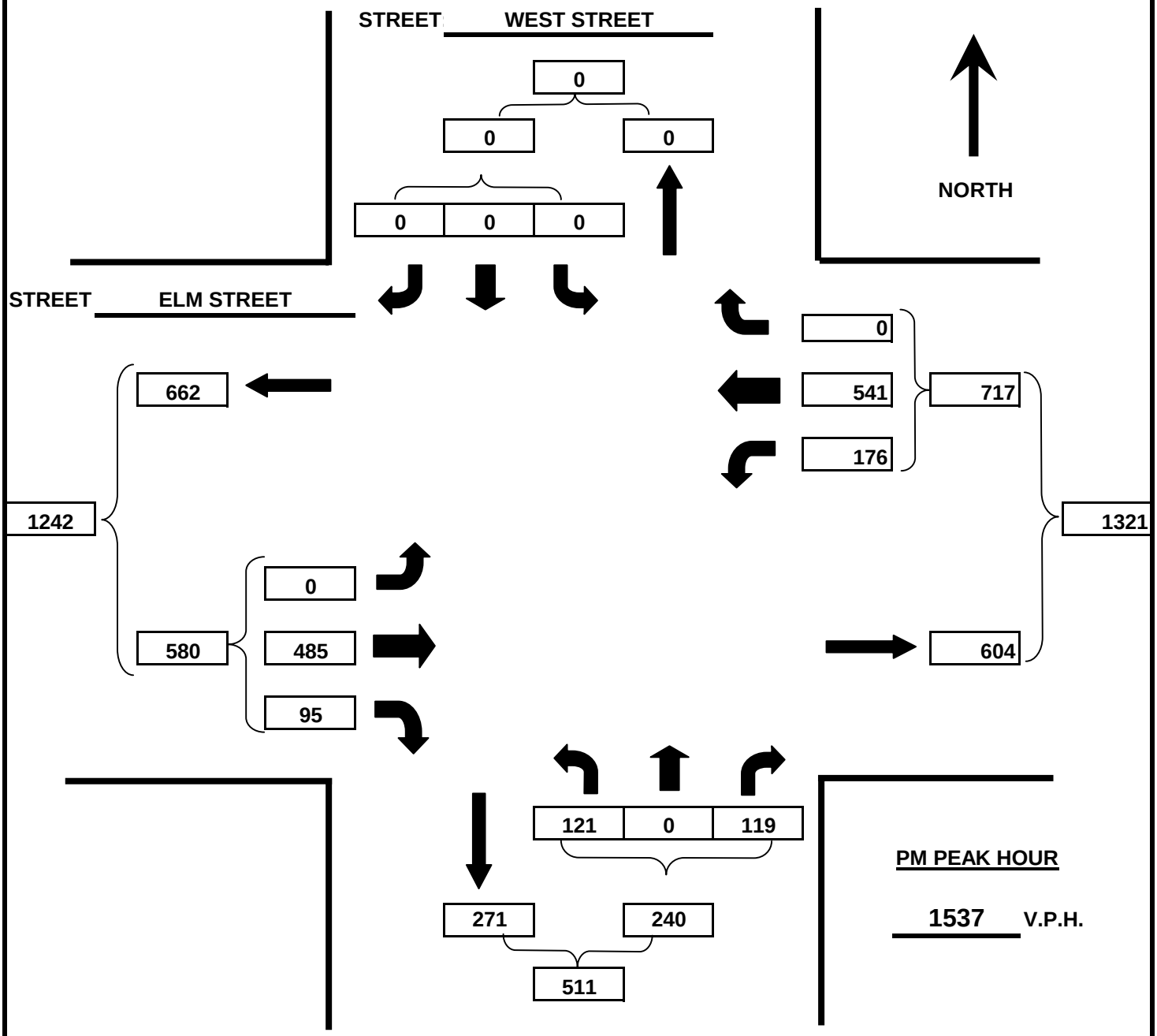

PM PEAK HOUR

1537 V.P.H.

SURVEY DATE 2009 DAY OF WEEK WEATHER

PM PEAK HOUR FROM 4:30 PM TO 5:30 PM

ARCADIS

INTERSECTION SUMMARY
TURNING MOVEMENT COUNT

Project: FLETCHER'S PAINT **Date:** 11/30/2007

Location: ELM STREET & WEST STREET **Job Number:**

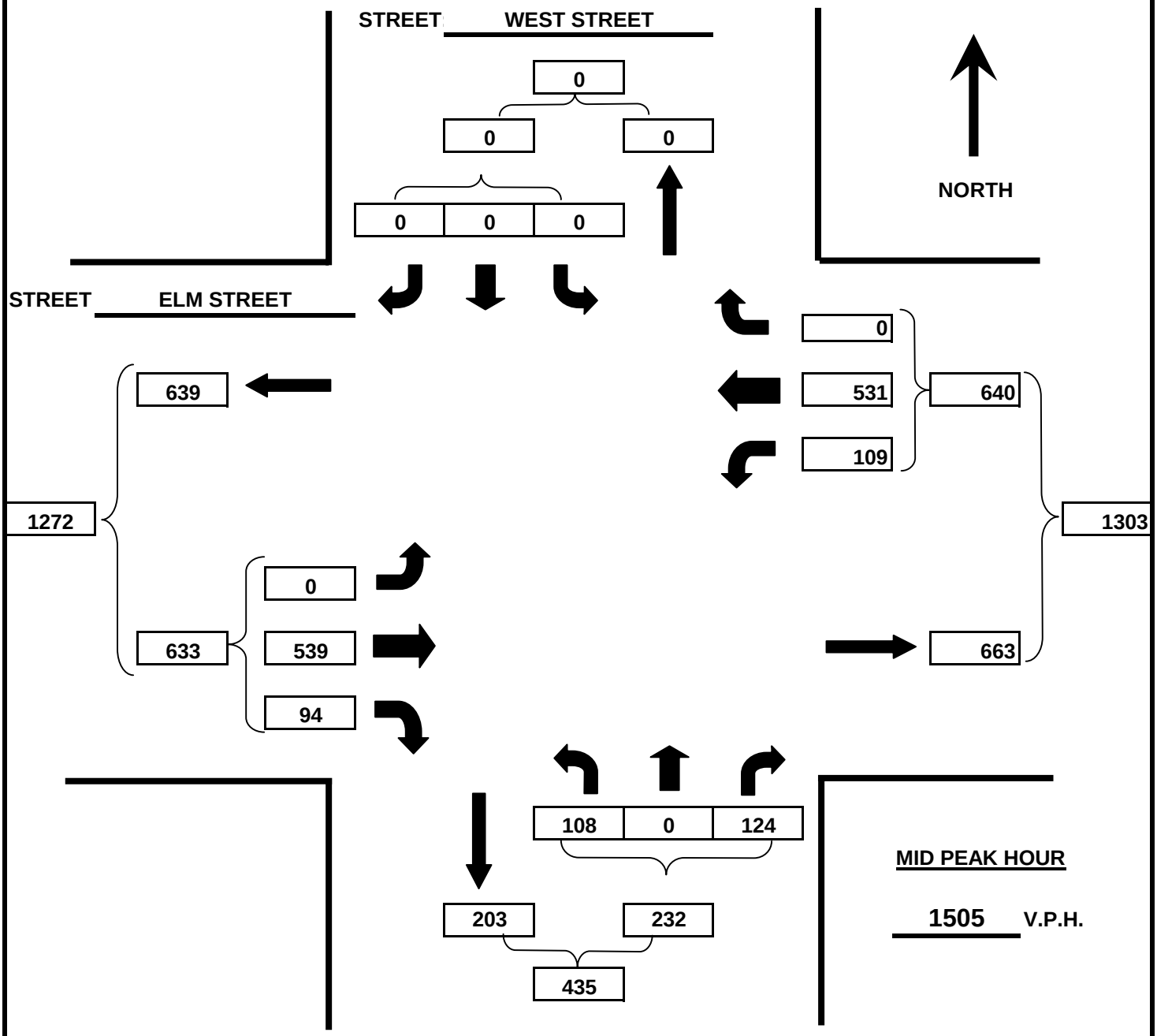

MID PEAK HOUR

1505 V.P.H.

SURVEY DATE 2009 DAY OF WEEK Saturday WEATHER

MID PEAK HOUR FROM 11:45 AM TO 12:45 PM

ARCADIS

INTERSECTION SUMMARY

TURNING MOVEMENT COUNT

Project: FLETCHER'S PAINT **Date:** 11/30/2007

Location: ELM STREET & OLD WILTON ROAD **Job Number:**

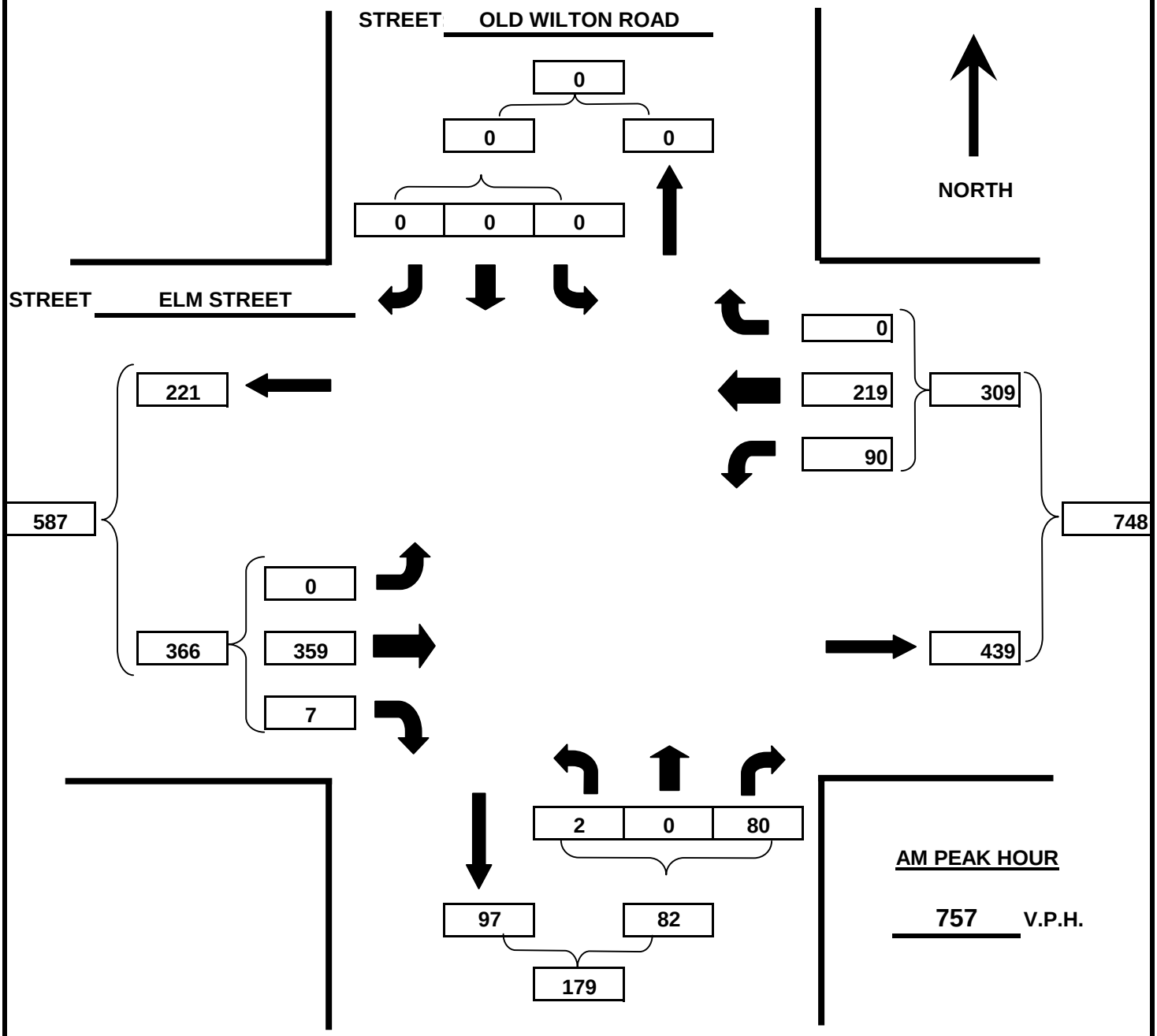

AM PEAK HOUR

757 V.P.H.

SURVEY DATE 2009 DAY OF WEEK WEATHER

AM PEAK HOUR FROM 7:15 AM TO 8:15 AM

ARCADIS

INTERSECTION SUMMARY
TURNING MOVEMENT COUNT

Project: FLETCHER'S PAINT **Date:** 11/30/2007

Location: ELM STREET & OLD WILTON ROAD **Job Number:**

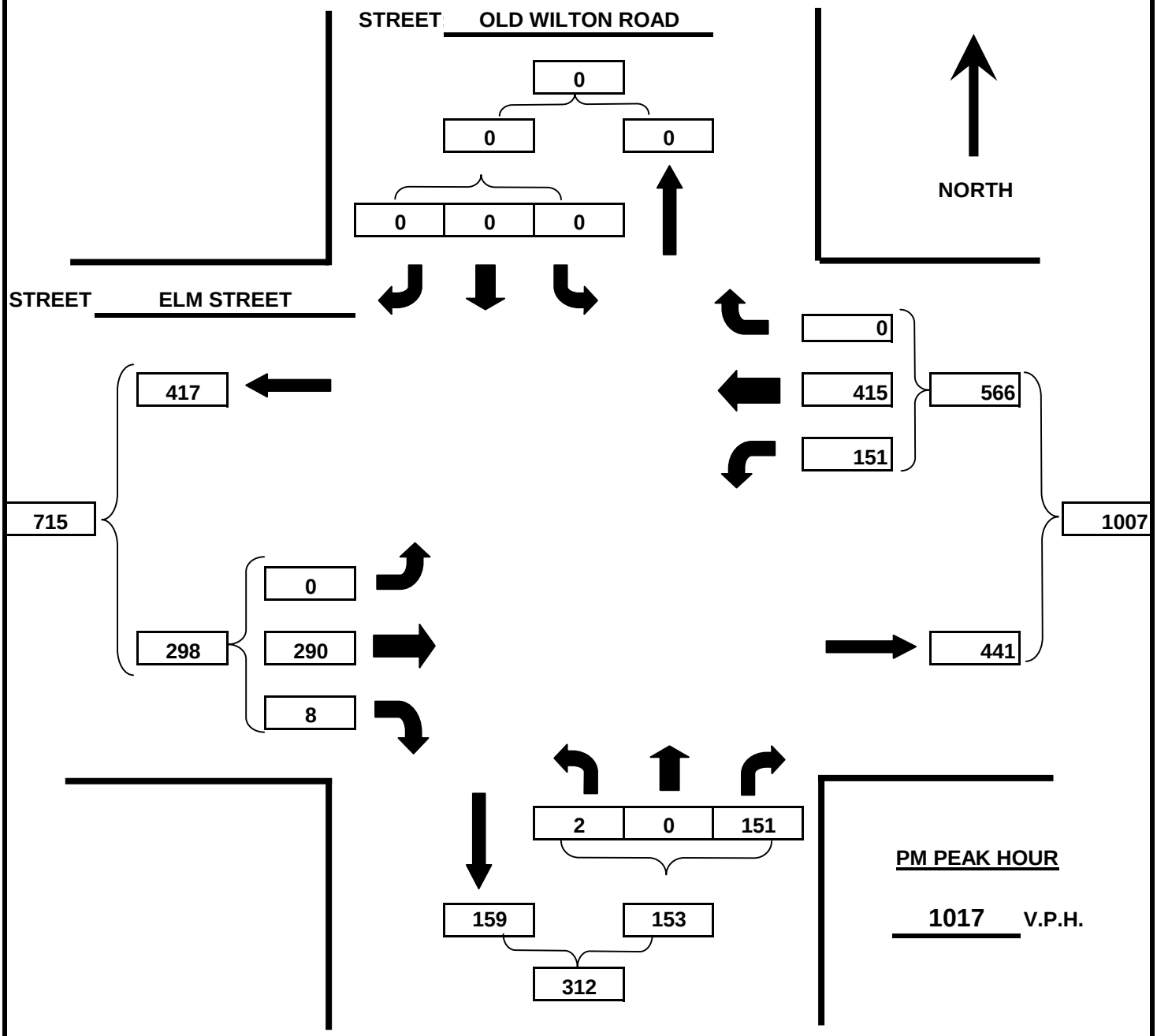

PM PEAK HOUR

1017 V.P.H.

SURVEY DATE 2009 DAY OF WEEK WEATHER

PM PEAK HOUR FROM 4:30 PM TO 5:30 PM

ARCADIS

INTERSECTION SUMMARY
TURNING MOVEMENT COUNT

Project: FLETCHER'S PAINT **Date:** 11/30/2007

Location: ELM STREET & OLD WILTON ROAD **Job Number:**

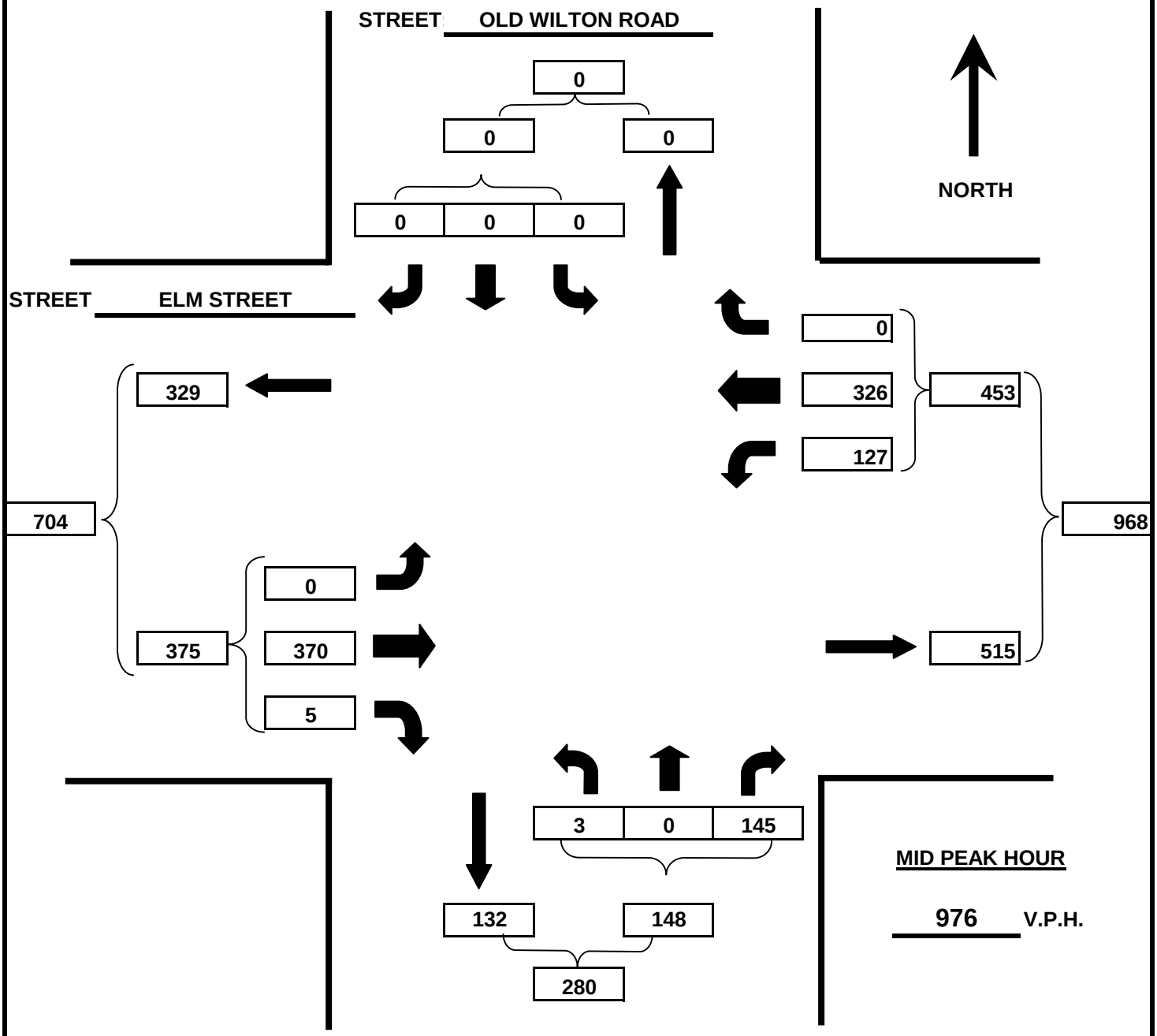

MID PEAK HOUR

976 V.P.H.

SURVEY DATE 2009 DAY OF WEEK Saturday WEATHER

MID PEAK HOUR FROM 11:30 AM TO 12:30 PM

ARCADIS

INTERSECTION SUMMARY
TURNING MOVEMENT COUNT

Project: FLETCHER'S PAINT **Date:** 11/30/2007

Location: ELM STREET & N. RIVER ROAD **Job Number:**

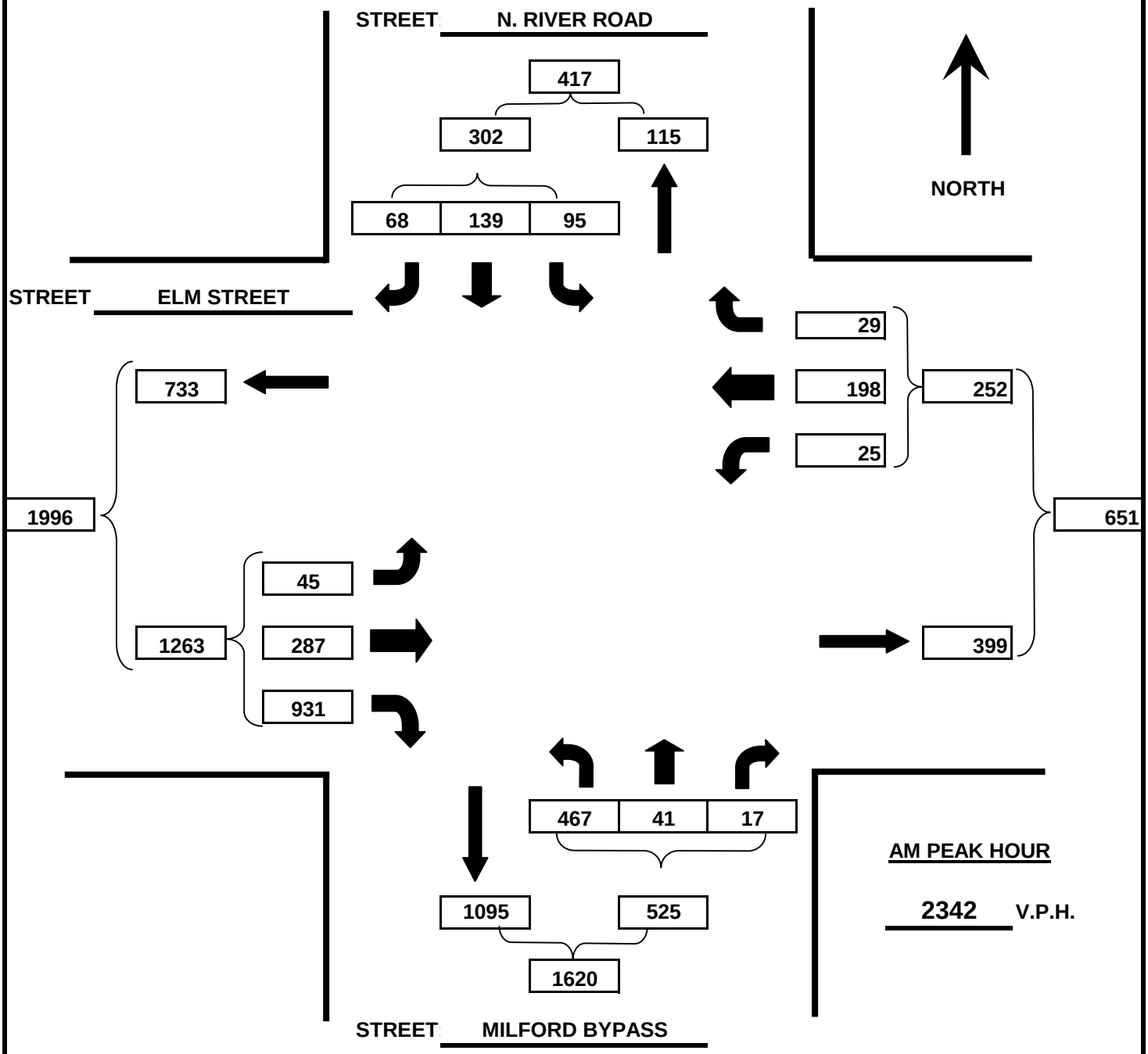

AM PEAK HOUR

2342 V.P.H.

SURVEY DATE 2009 DAY OF WEEK WEATHER

AM PEAK HOUR FROM 7:15 AM TO 8:15 AM

ARCADIS

INTERSECTION SUMMARY
TURNING MOVEMENT COUNT

Project: FLETCHER'S PAINT **Date:** 11/30/2007

Location: ELM STREET & N. RIVER ROAD **Job Number:**

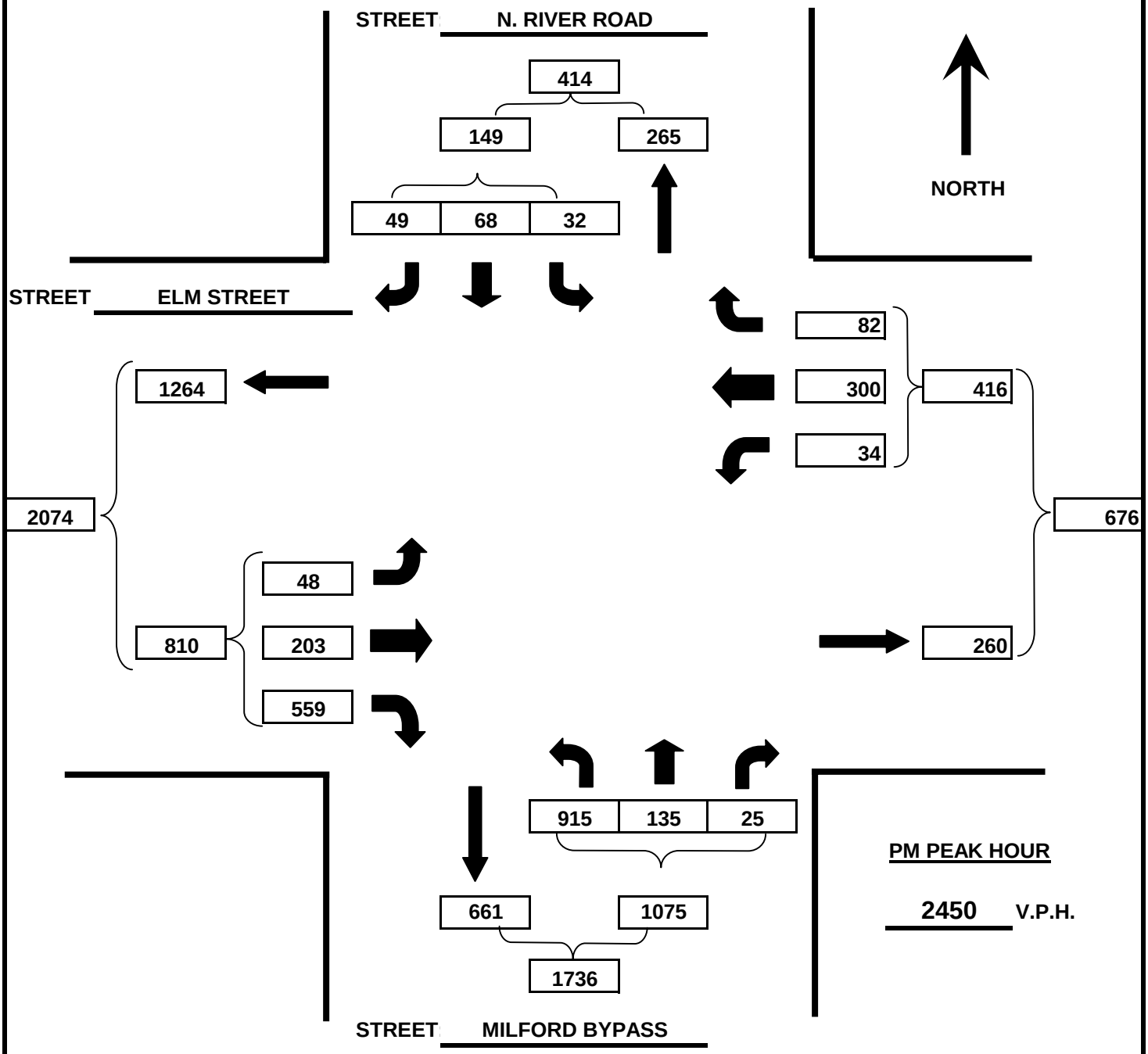

SURVEY DATE 2009 DAY OF WEEK WEATHER

PM PEAK HOUR FROM 5:00 PM TO 6:00 PM

ARCADIS

INTERSECTION SUMMARY
TURNING MOVEMENT COUNT

Project: FLETCHER'S PAINT **Date:** 11/30/2007

Location: ELM STREET & N. RIVER ROAD **Job Number:**

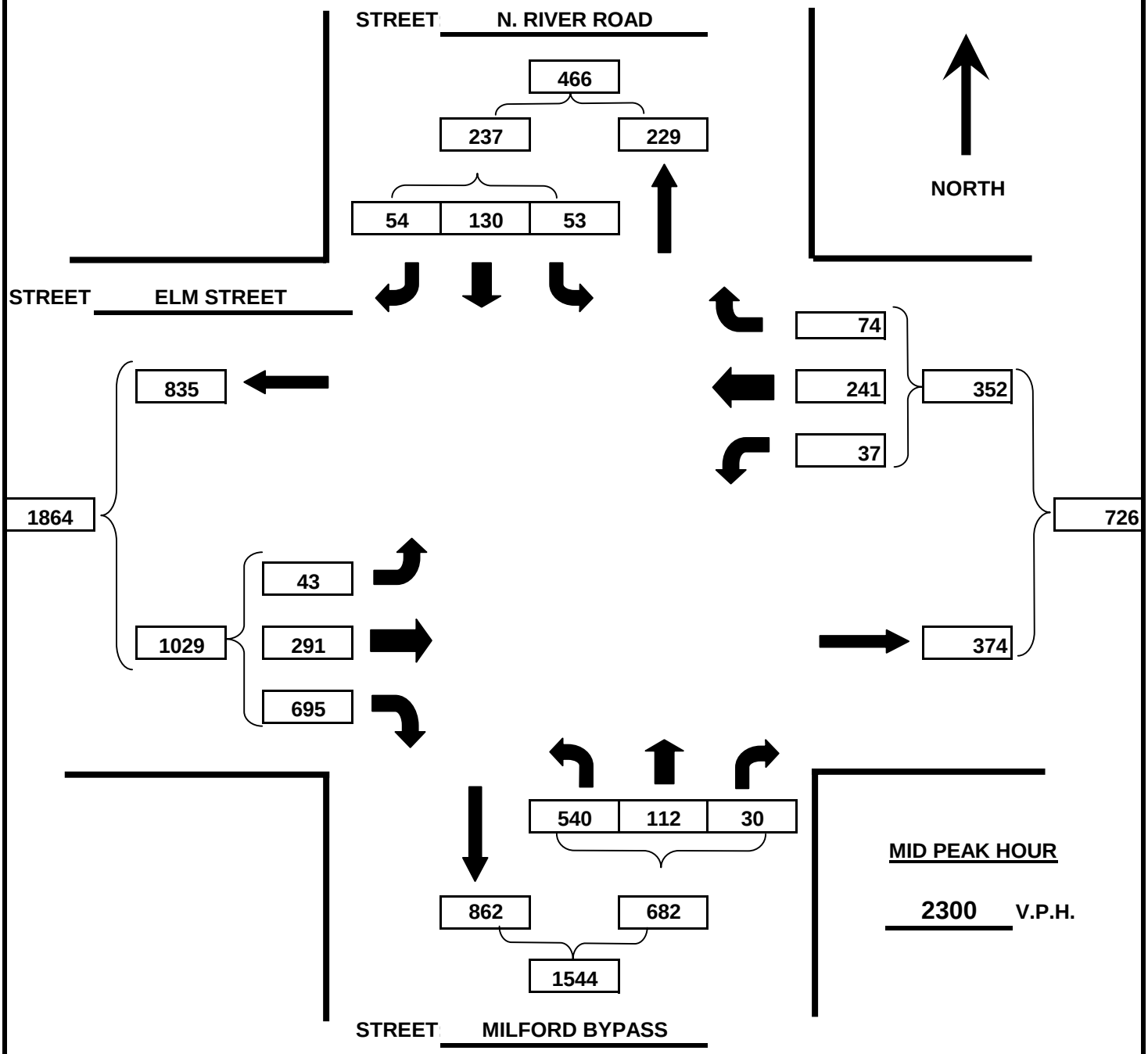

MID PEAK HOUR

2300 V.P.H.

SURVEY DATE 2009 DAY OF WEEK Saturday WEATHER

MID PEAK HOUR FROM 11:00 AM TO 12:00 PM

ARCADIS

INTERSECTION SUMMARY
TURNING MOVEMENT COUNT

Project: FLETCHER'S PAINT **Date:** 11/30/2007

Location: ROUTE 13 & LINCOLN STREET **Job Number:**

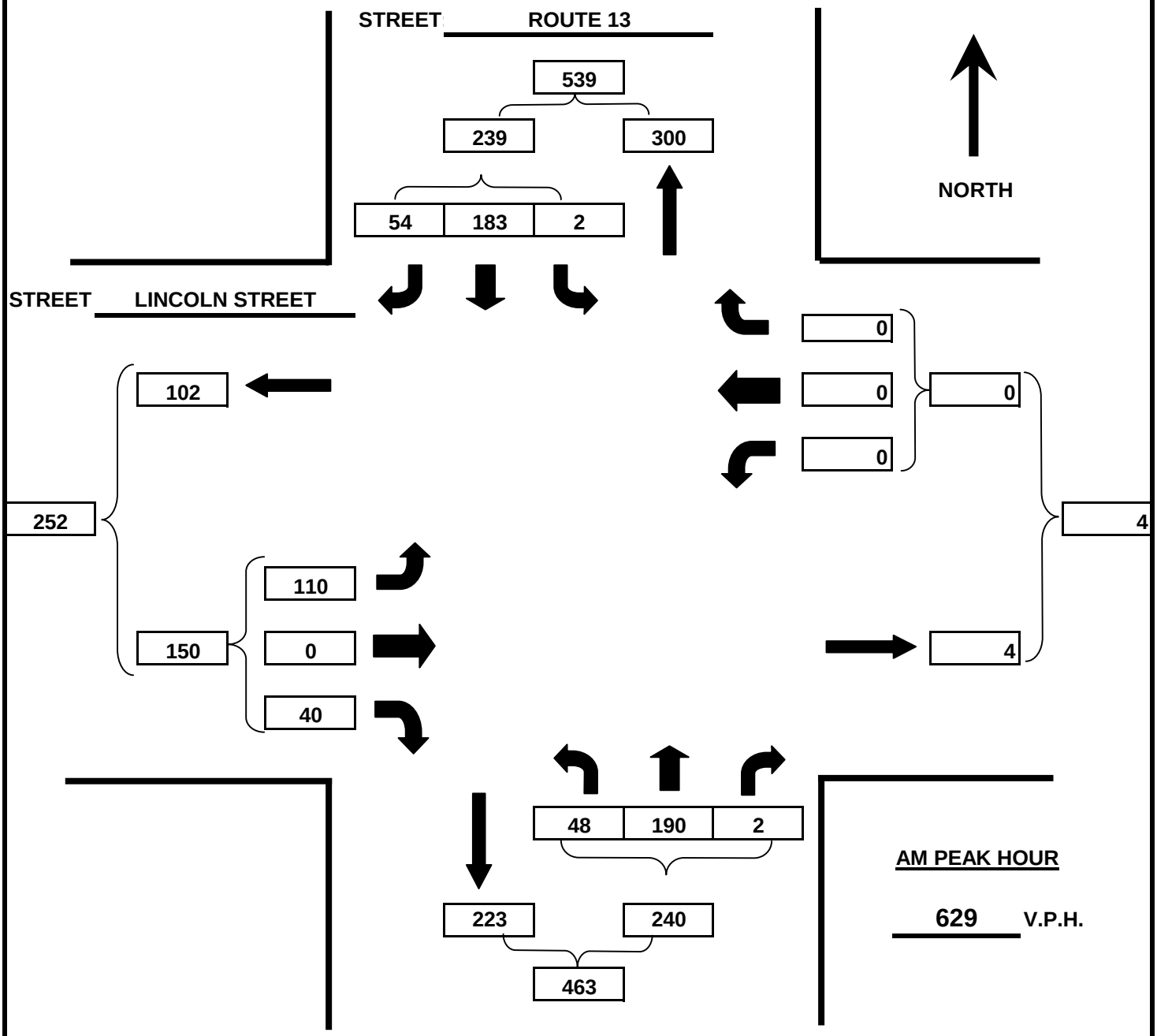

SURVEY DATE 2009 DAY OF WEEK WEATHER

AM PEAK HOUR FROM 7:15 AM TO 8:15 AM

ARCADIS

INTERSECTION SUMMARY
TURNING MOVEMENT COUNT

Project: FLETCHER'S PAINT **Date:** 11/30/2007

Location: ROUTE 13 & LINCOLN STREET **Job Number:**

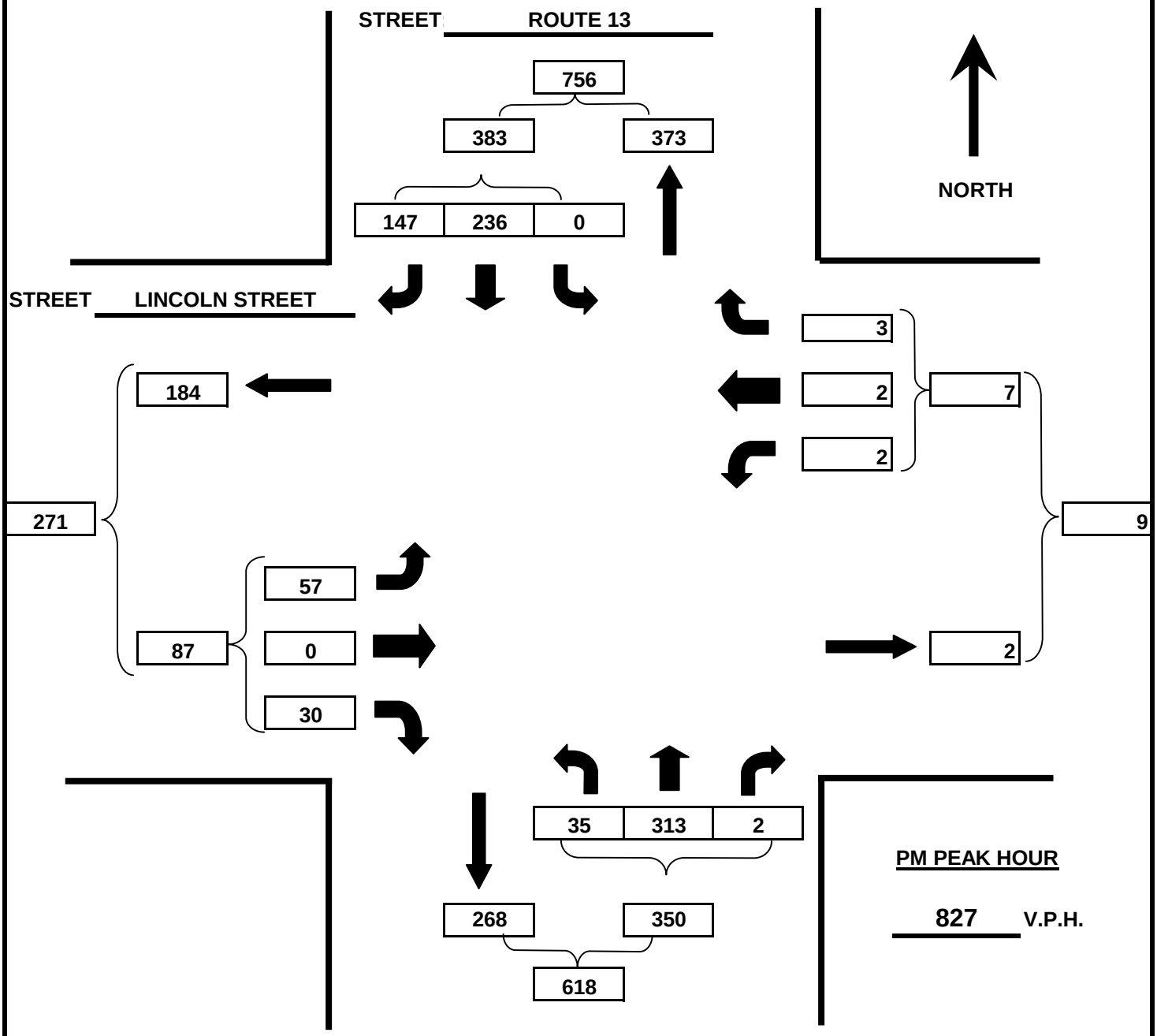

SURVEY DATE 2009 DAY OF WEEK WEATHER

PM PEAK HOUR FROM 4:00 PM TO 5:00 PM

ARCADIS

INTERSECTION SUMMARY
TURNING MOVEMENT COUNT

Project: FLETCHER'S PAINT **Date:** 11/30/2007

Location: ROUTE 13 & LINCOLN STREET **Job Number:**

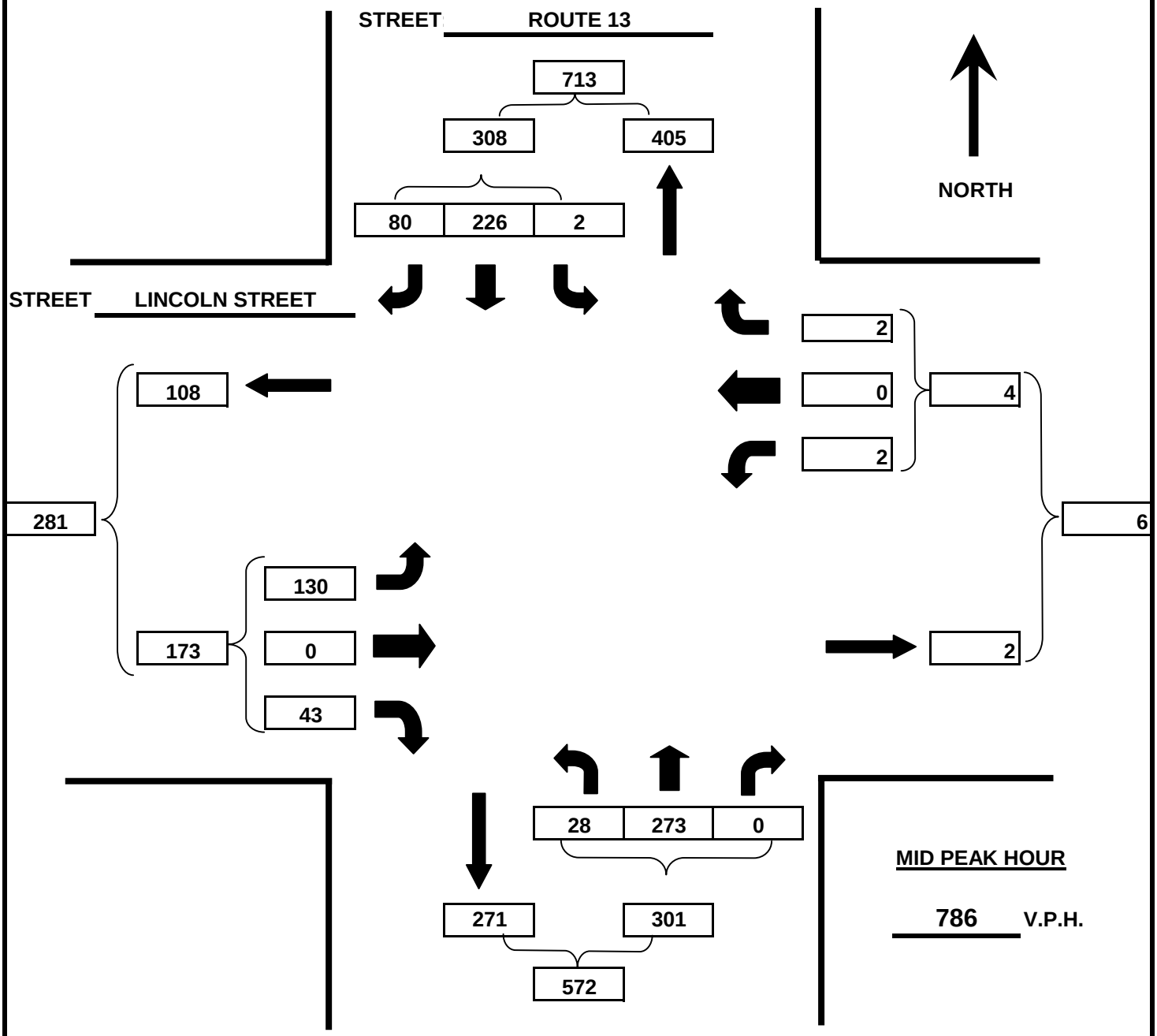

MID PEAK HOUR

786 V.P.H.

SURVEY DATE 2009 DAY OF WEEK Saturday WEATHER

MID PEAK HOUR FROM 11:00 AM TO 12:00 PM

ARCADIS

INTERSECTION SUMMARY
TURNING MOVEMENT COUNT

Project: FLETCHER'S PAINT **Date:** 11/30/2007

Location: OSGOOD ROAD & MASON ROAD **Job Number:**

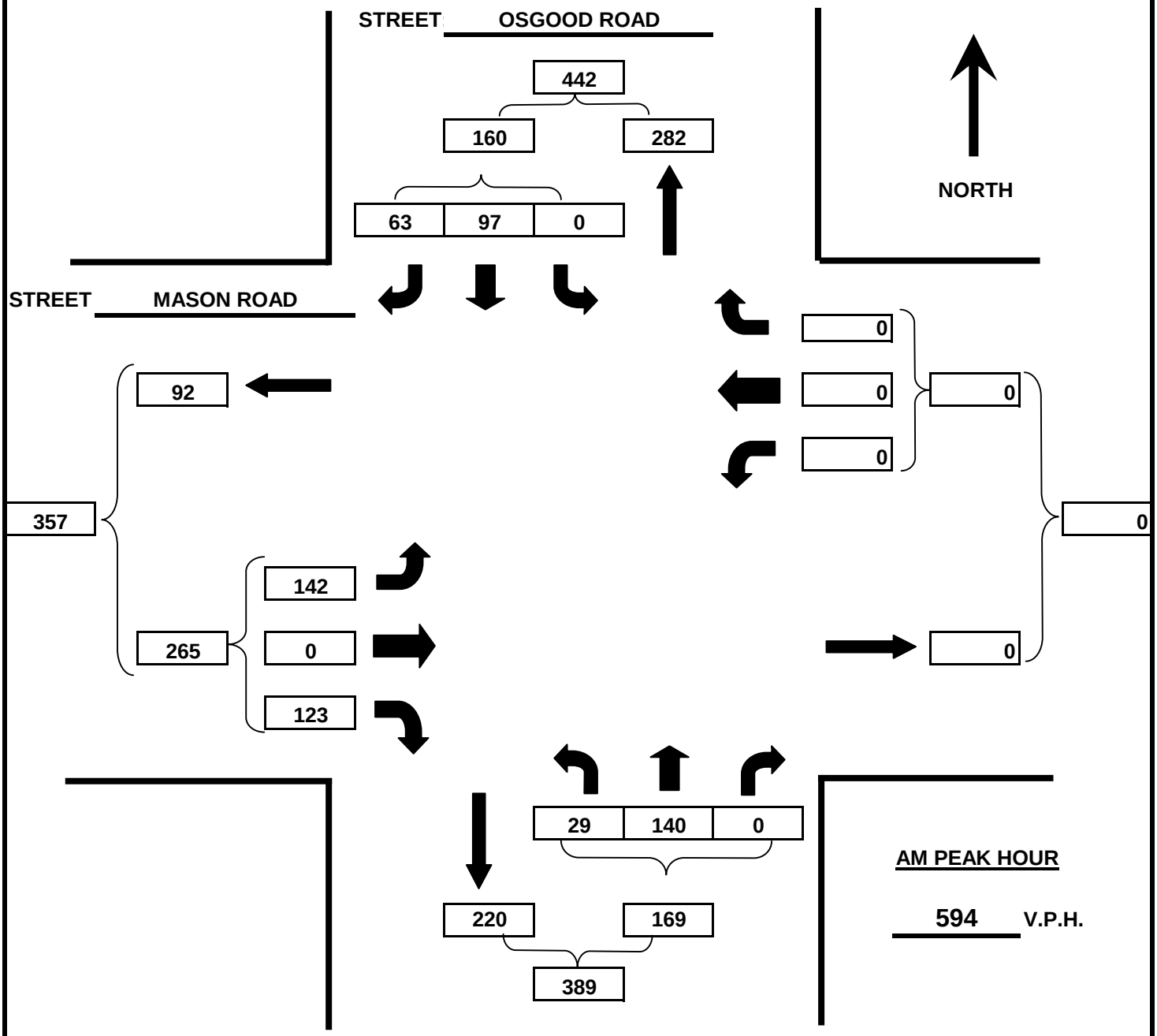

SURVEY DATE 2009 DAY OF WEEK WEATHER

AM PEAK HOUR FROM 7:00 AM TO 8:00 AM

ARCADIS

INTERSECTION SUMMARY
TURNING MOVEMENT COUNT

Project: FLETCHER'S PAINT **Date:** 11/30/2007

Location: OSGOOD ROAD & MASON ROAD **Job Number:**

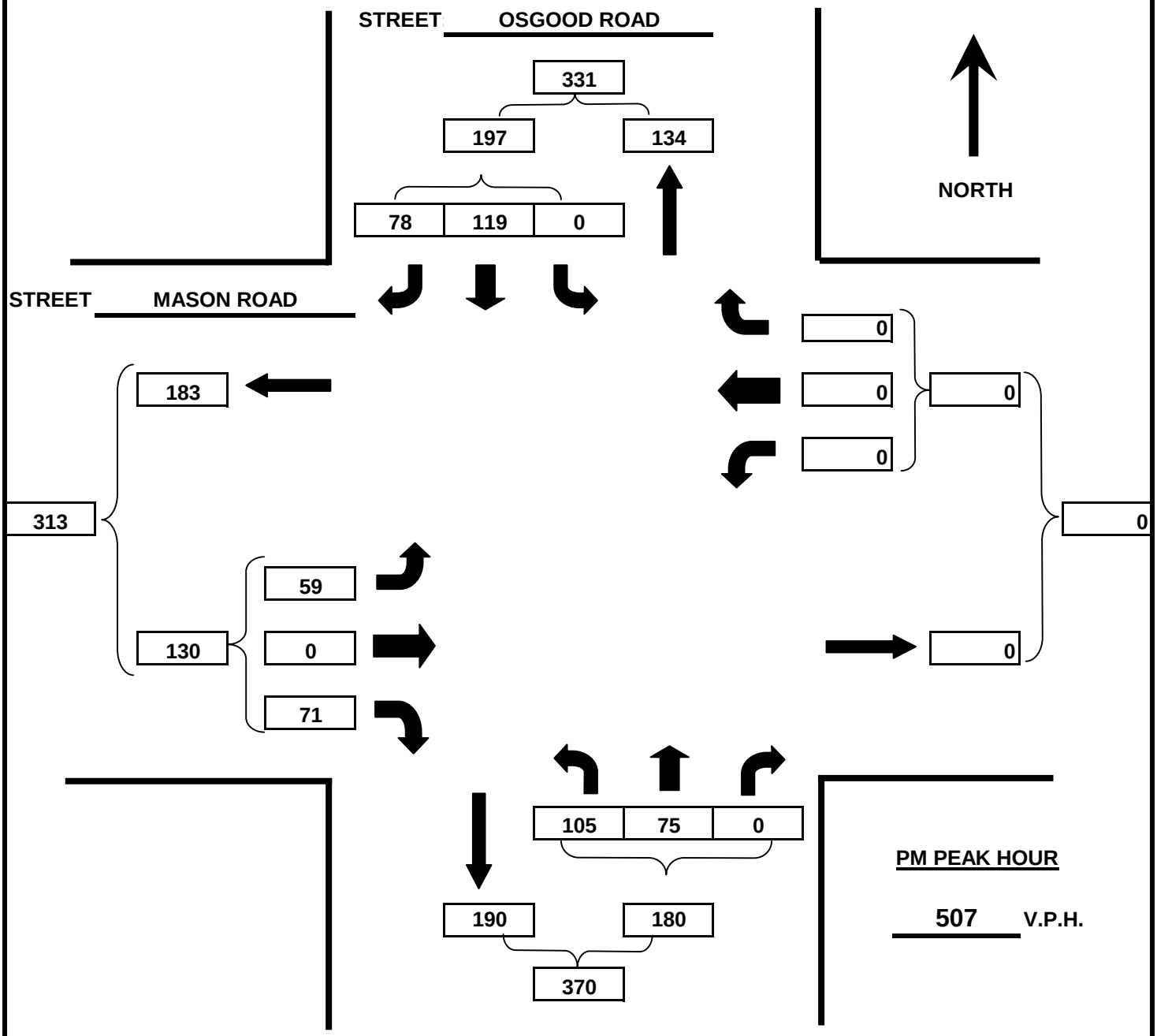

PM PEAK HOUR

507 V.P.H.

SURVEY DATE 2009 DAY OF WEEK WEATHER

PM PEAK HOUR FROM 4:30 PM TO 5:30 PM

ARCADIS

TURNING MOVEMENT COUNT

Project: FLETCHER'S PAINT **Date:** 11/30/2007

Location: OSGOOD ROAD & MASON ROAD **Job Number:**

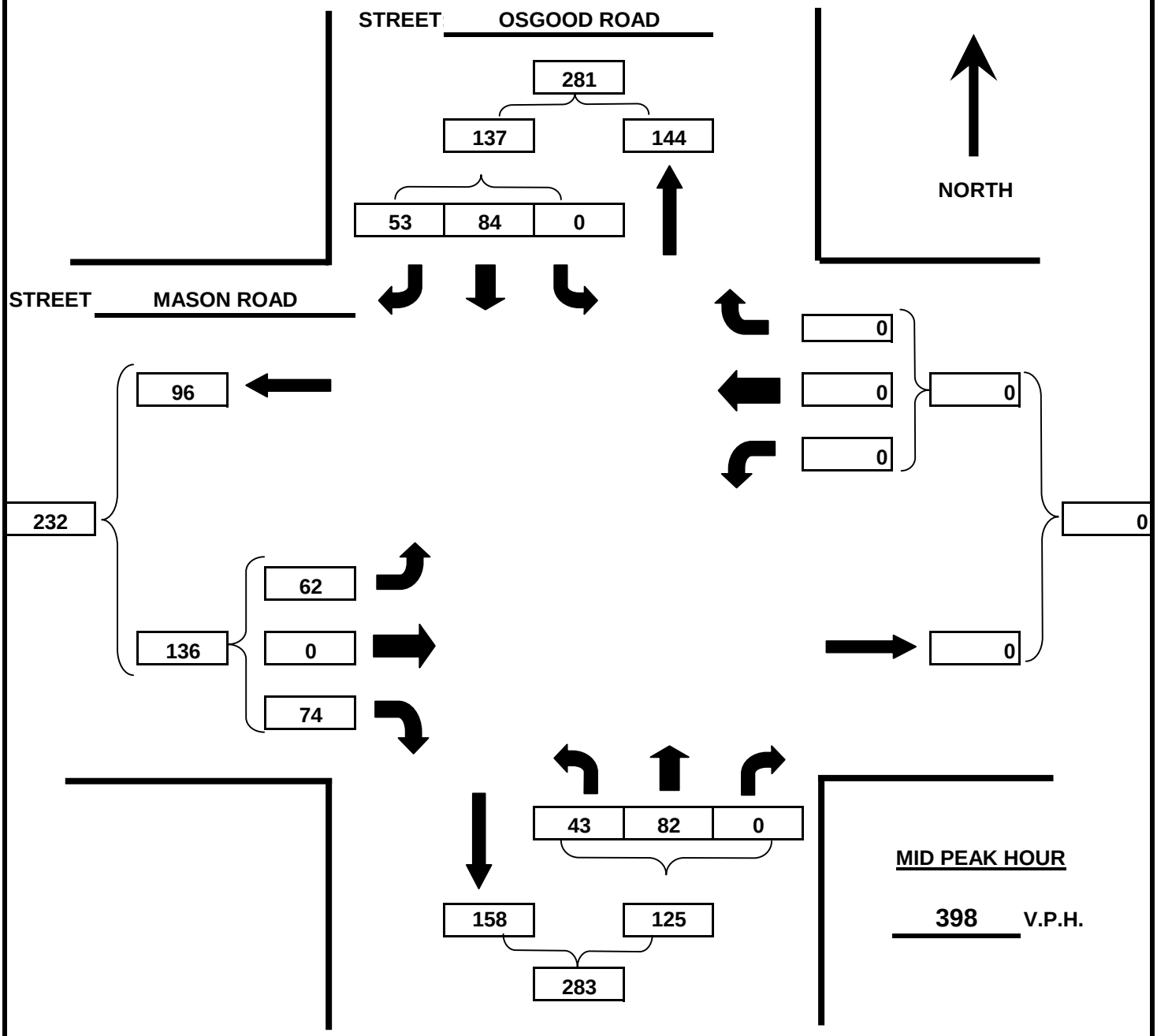

MID PEAK HOUR

398 V.P.H.

SURVEY DATE 2009 DAY OF WEEK Saturday WEATHER

MID PEAK HOUR FROM 1:00 PM TO 2:00 PM

ARCADIS

INTERSECTION SUMMARY
TURNING MOVEMENT COUNT

Project: FLETCHER'S PAINT **Date:** 11/30/2007

Location: KNIGHT STREET & WEST STREET **Job Number:**

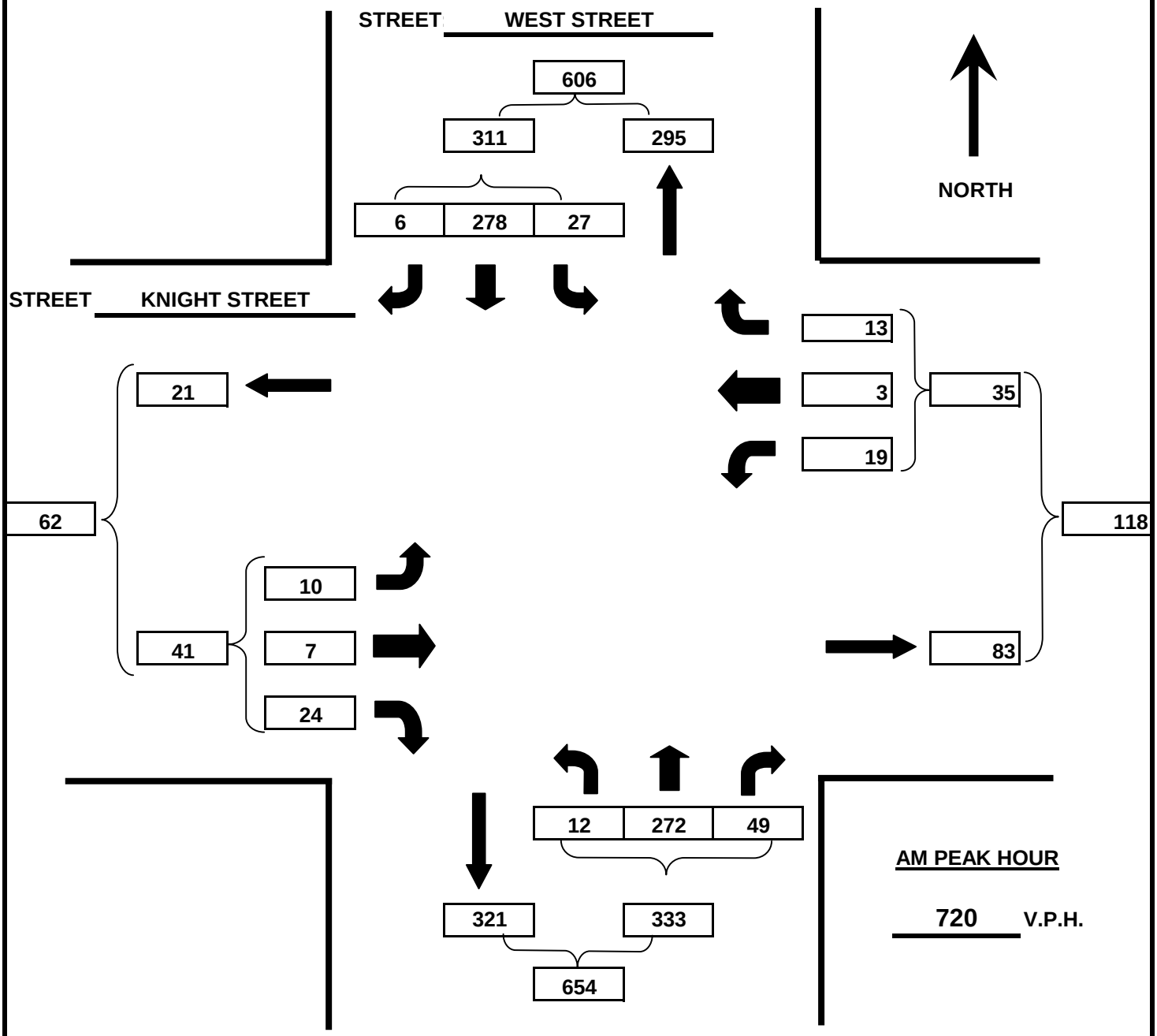

AM PEAK HOUR

720 V.P.H.

SURVEY DATE 2009 DAY OF WEEK WEATHER

AM PEAK HOUR FROM 7:00 AM TO 8:00 AM

ARCADIS

INTERSECTION SUMMARY
TURNING MOVEMENT COUNT

Project: FLETCHER'S PAINT **Date:** 11/30/2007

Location: KNIGHT STREET & WEST STREET **Job Number:**

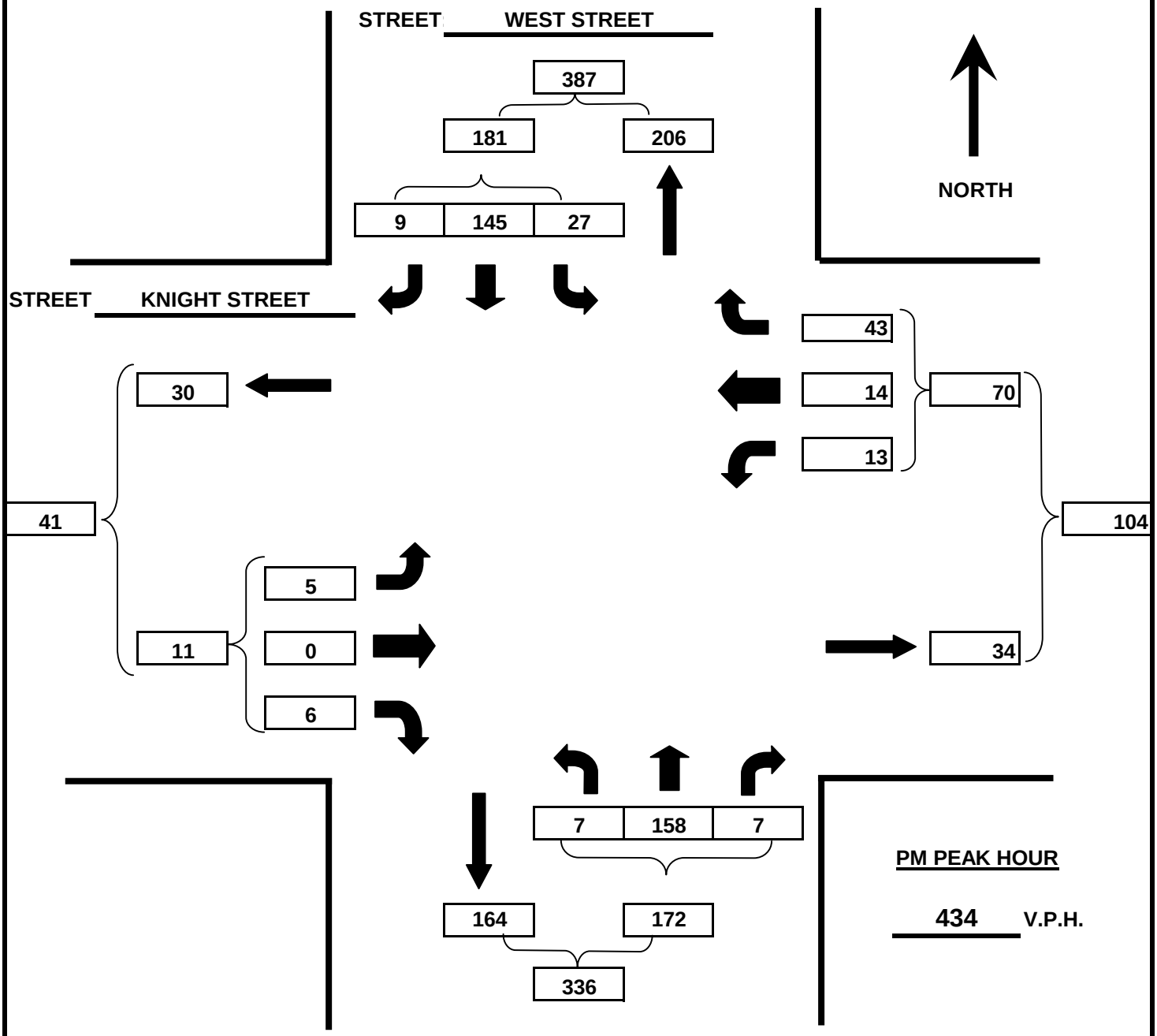

PM PEAK HOUR

434 V.P.H.

SURVEY DATE 2009 DAY OF WEEK WEATHER

PM PEAK HOUR FROM 5:00 PM TO 6:00 PM

ARCADIS

INTERSECTION SUMMARY
TURNING MOVEMENT COUNT

Project: FLETCHER'S PAINT **Date:** 11/30/2007

Location: KNIGHT STREET & WEST STREET **Job Number:**

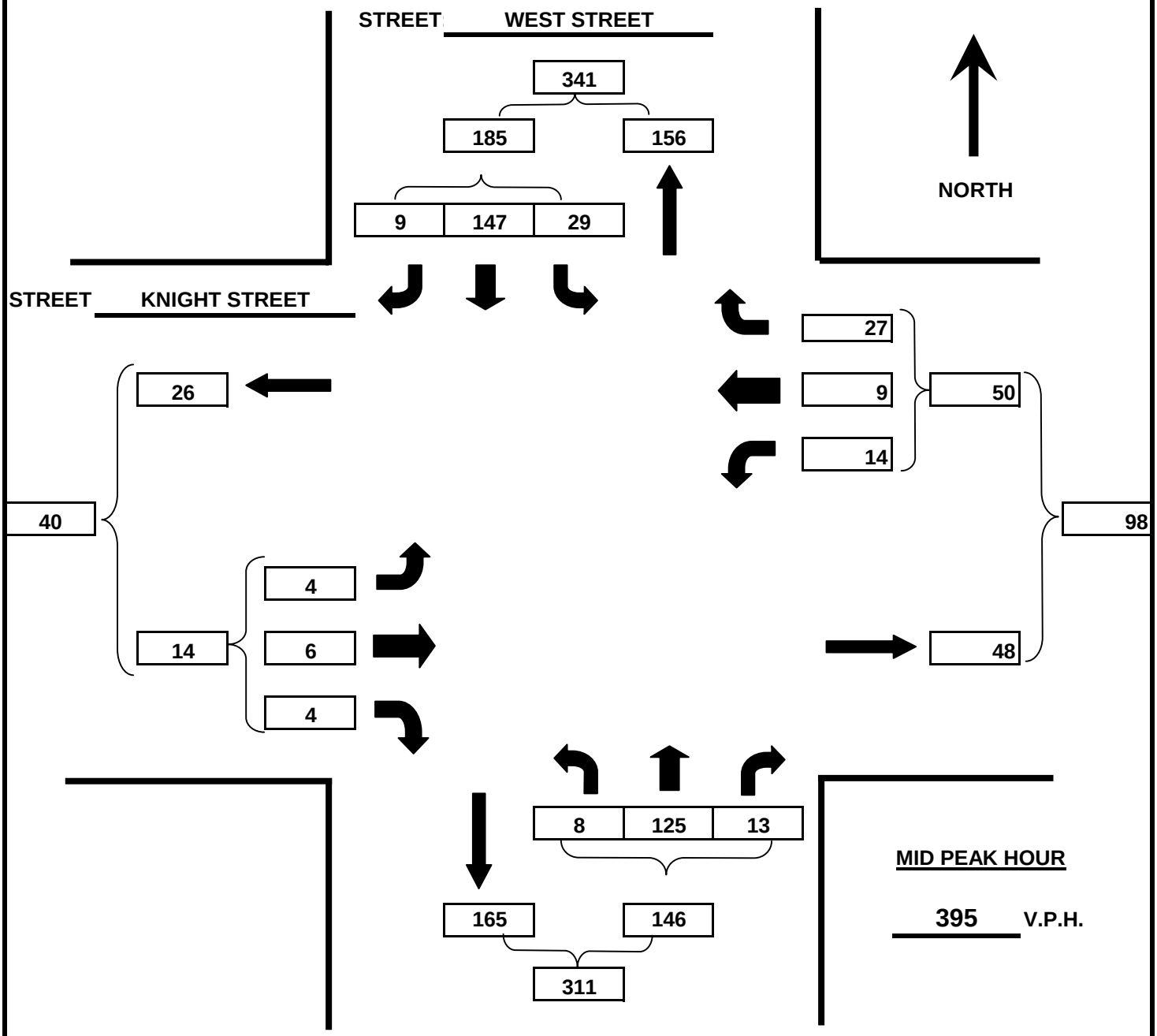

MID PEAK HOUR

395 V.P.H.

SURVEY DATE 2009 DAY OF WEEK Saturday WEATHER

MID PEAK HOUR FROM 11:30 AM TO 12:30 PM

ARCADIS

Attachment B-3

Projected (2009) Remedial Action Intersection Summaries

INTERSECTION SUMMARY
TURNING MOVEMENT COUNT

Project: FLETCHER'S PAINT **Date:** 11/30/2007

Location: KNIGHT STREET & WEST STREET **Job Number:**

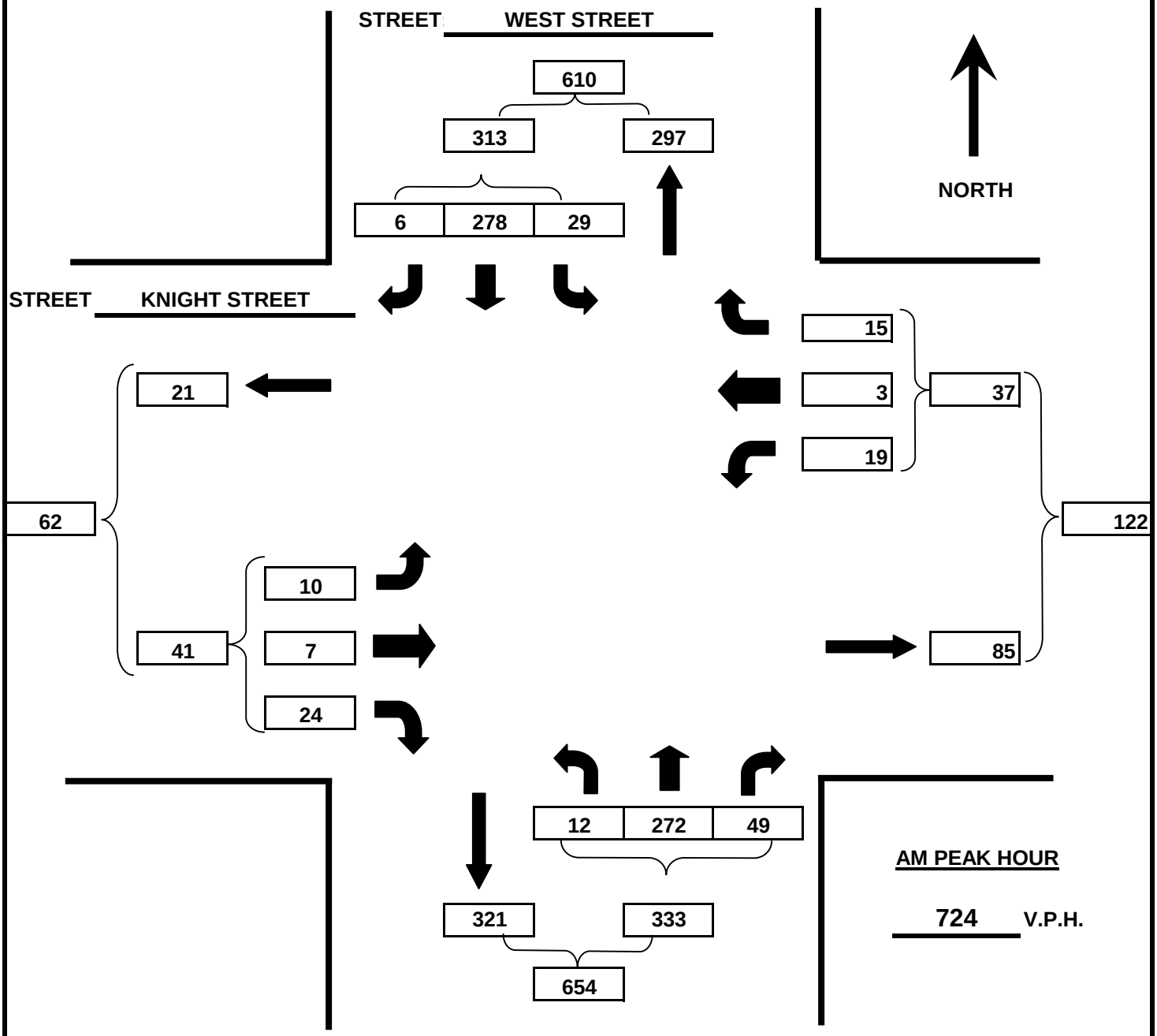

AM PEAK HOUR

724 V.P.H.

SURVEY DATE PROP. 2009 DAY OF WEEK WEATHER

AM PEAK HOUR FROM 7:00 AM TO 8:00 AM

ARCADIS

INTERSECTION SUMMARY
TURNING MOVEMENT COUNT

Project: FLETCHER'S PAINT **Date:** 11/30/2007

Location: KNIGHT STREET & WEST STREET **Job Number:**

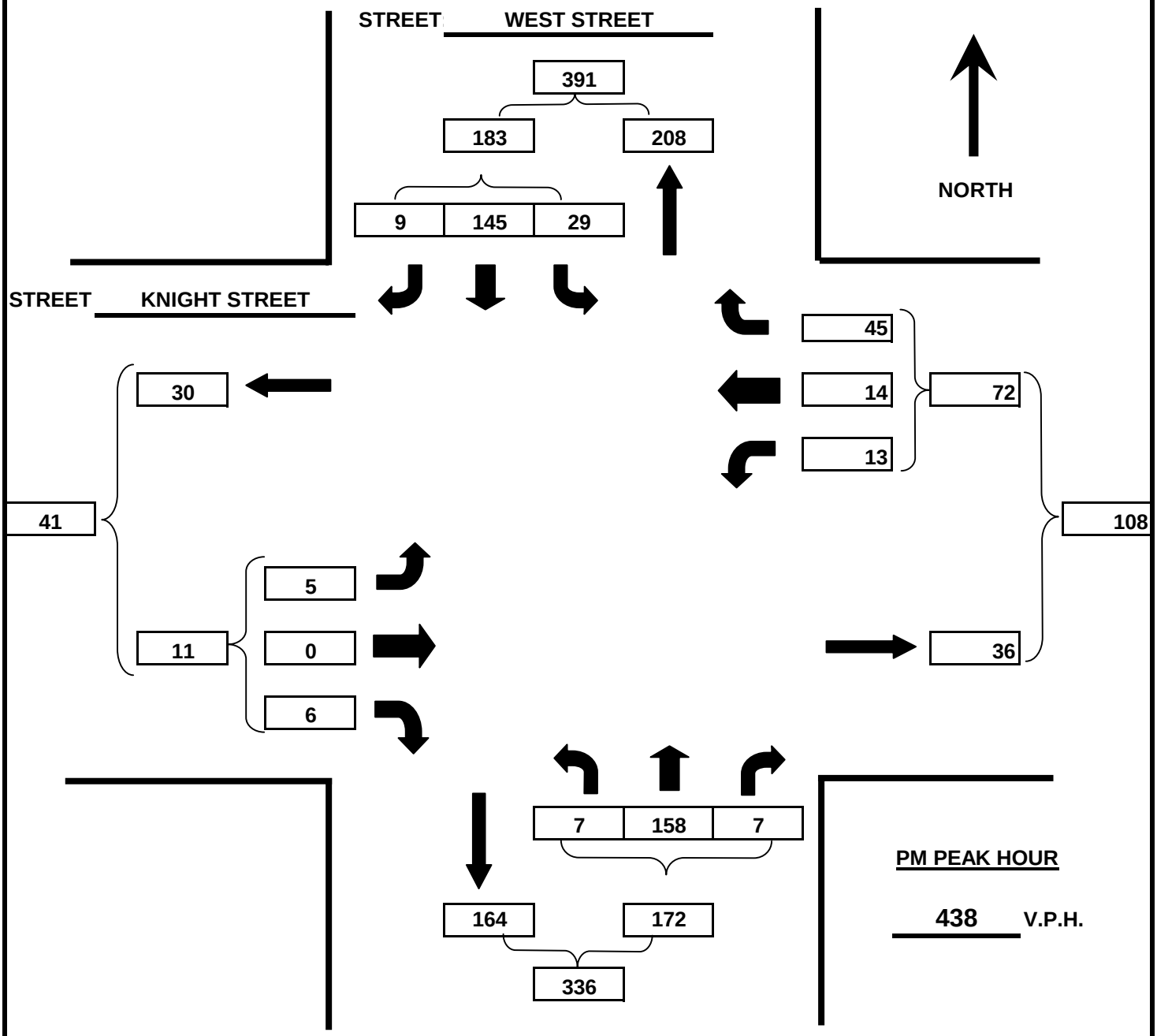

PM PEAK HOUR

438 V.P.H.

SURVEY DATE PROP. 2009 DAY OF WEEK WEATHER

PM PEAK HOUR FROM 5:00 PM TO 6:00 PM

ARCADIS

INTERSECTION SUMMARY
TURNING MOVEMENT COUNT

Project: FLETCHER'S PAINT **Date:** 11/30/2007

Location: KNIGHT STREET & WEST STREET **Job Number:**

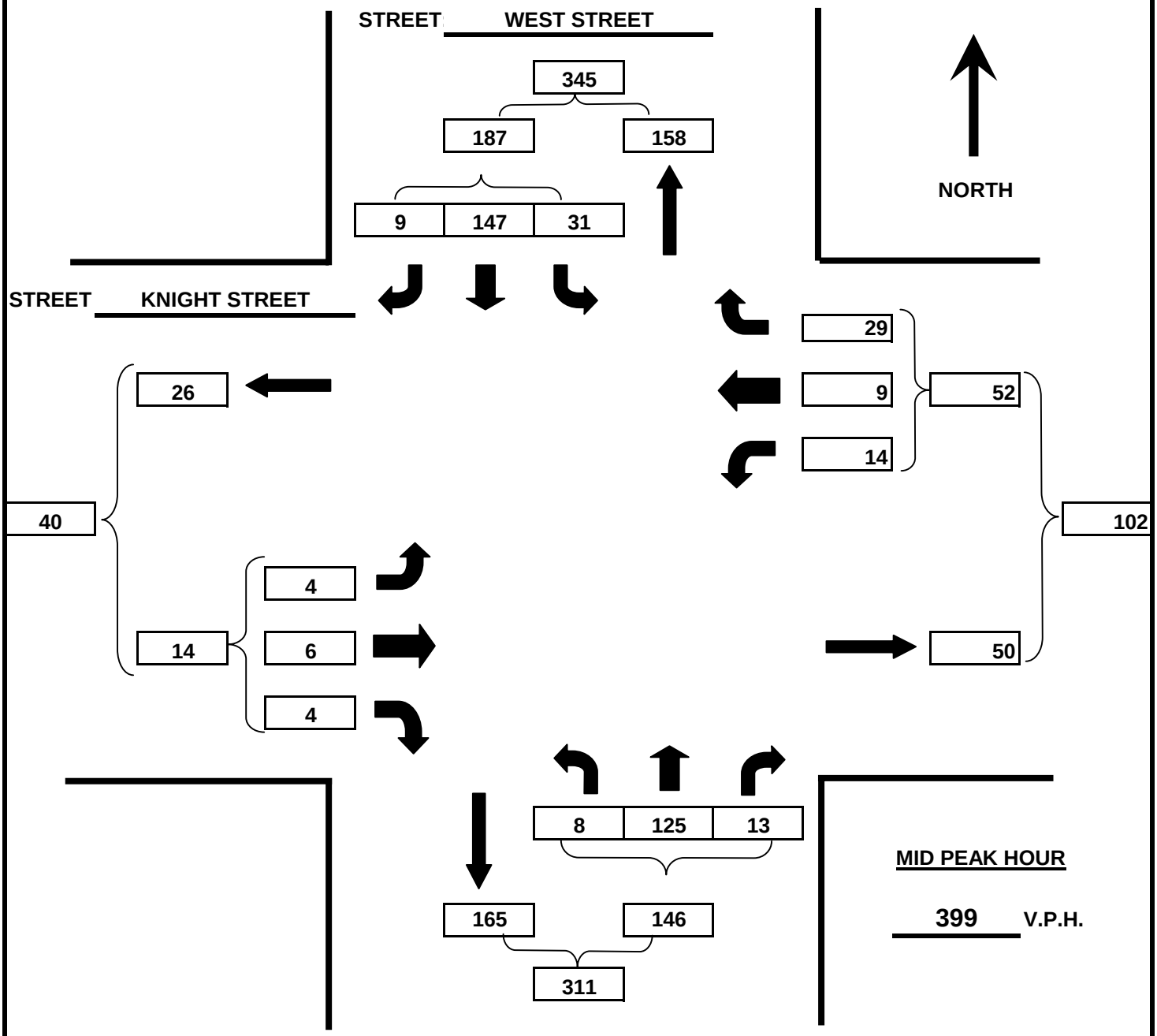

MID PEAK HOUR

399 V.P.H.

SURVEY DATE PROP. 2009 DAY OF WEEK Saturday WEATHER

MID PEAK HOUR FROM 11:30 AM TO 12:30 PM

ARCADIS

INTERSECTION SUMMARY

TURNING MOVEMENT COUNT

Project: FLETCHER'S PAINT **Date:** 11/30/2007

Location: ELM STREET & WEST STREET **Job Number:**

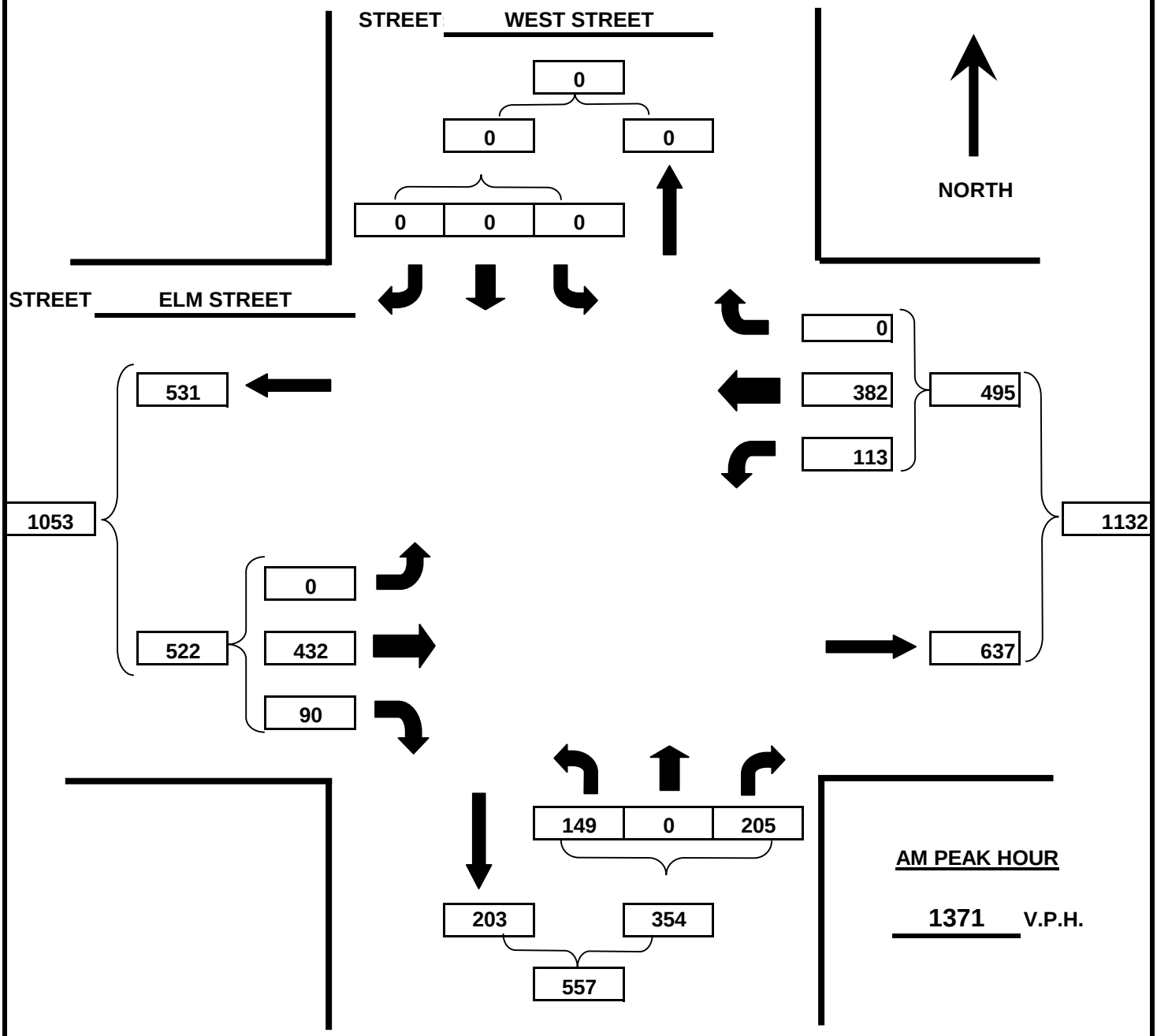

AM PEAK HOUR

1371 V.P.H.

SURVEY DATE PROP. 2009 DAY OF WEEK WEATHER

AM PEAK HOUR FROM 7:15 AM TO 8:15 AM

ARCADIS

INTERSECTION SUMMARY
TURNING MOVEMENT COUNT

Project: FLETCHER'S PAINT **Date:** 11/30/2007

Location: ELM STREET & WEST STREET **Job Number:**

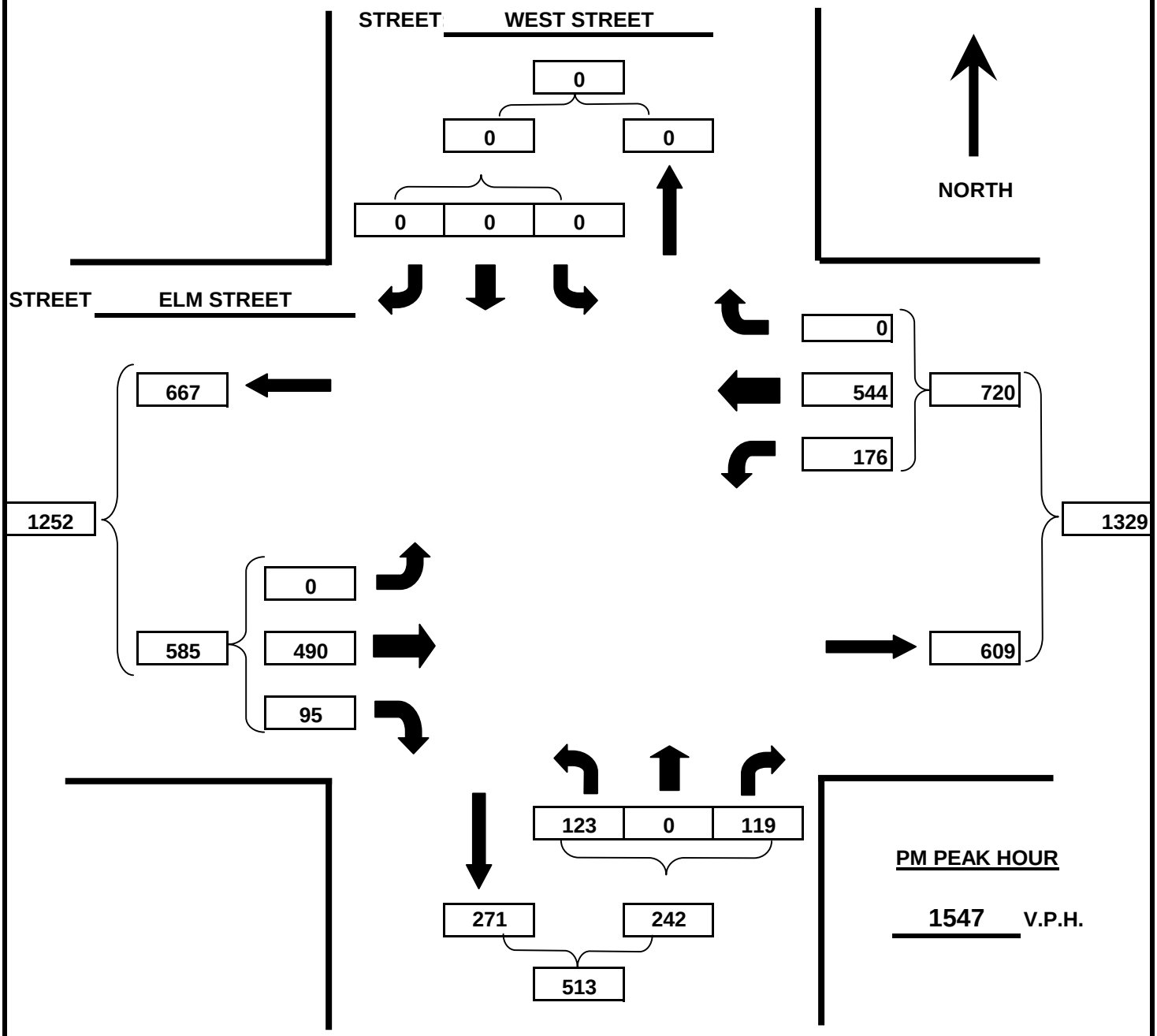

SURVEY DATE PROP. 2009 DAY OF WEEK WEATHER

PM PEAK HOUR FROM 4:30 PM TO 5:30 PM

ARCADIS

INTERSECTION SUMMARY
TURNING MOVEMENT COUNT

Project: FLETCHER'S PAINT **Date:** 11/30/2007

Location: ELM STREET & WEST STREET **Job Number:**

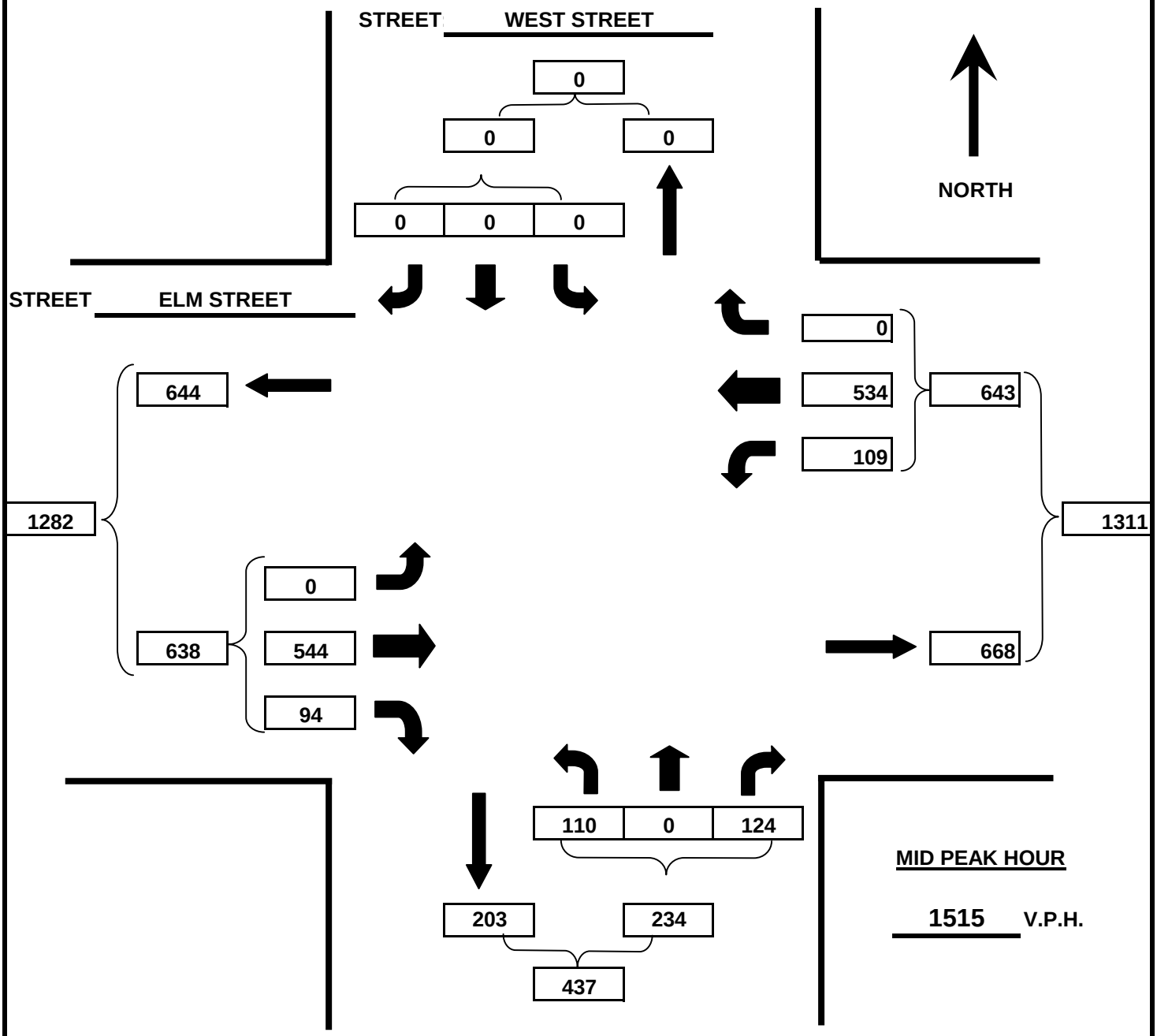

MID PEAK HOUR

1515 V.P.H.

SURVEY DATE PROP. 2009 DAY OF WEEK Saturday WEATHER

MID PEAK HOUR FROM 11:45 AM TO 12:45 PM

ARCADIS

INTERSECTION SUMMARY
TURNING MOVEMENT COUNT

Project: FLETCHER'S PAINT **Date:** 11/30/2007

Location: ELM STREET & OLD WILTON ROAD **Job Number:**

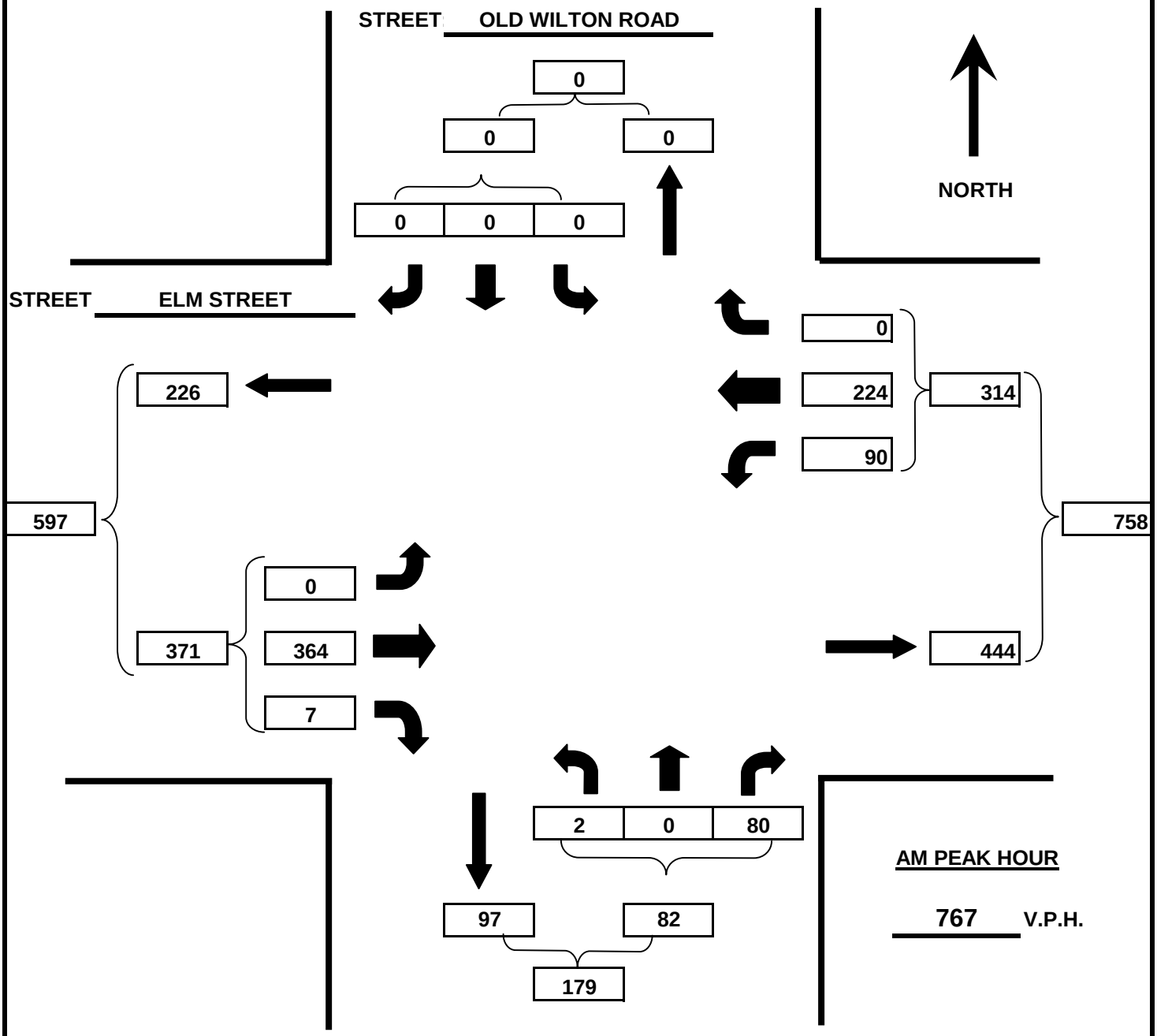

AM PEAK HOUR

767 V.P.H.

SURVEY DATE PROP. 2009 DAY OF WEEK WEATHER

AM PEAK HOUR FROM 7:15 AM TO 8:15 AM

ARCADIS

INTERSECTION SUMMARY
TURNING MOVEMENT COUNT

Project: FLETCHER'S PAINT **Date:** 11/30/2007

Location: ELM STREET & OLD WILTON ROAD **Job Number:**

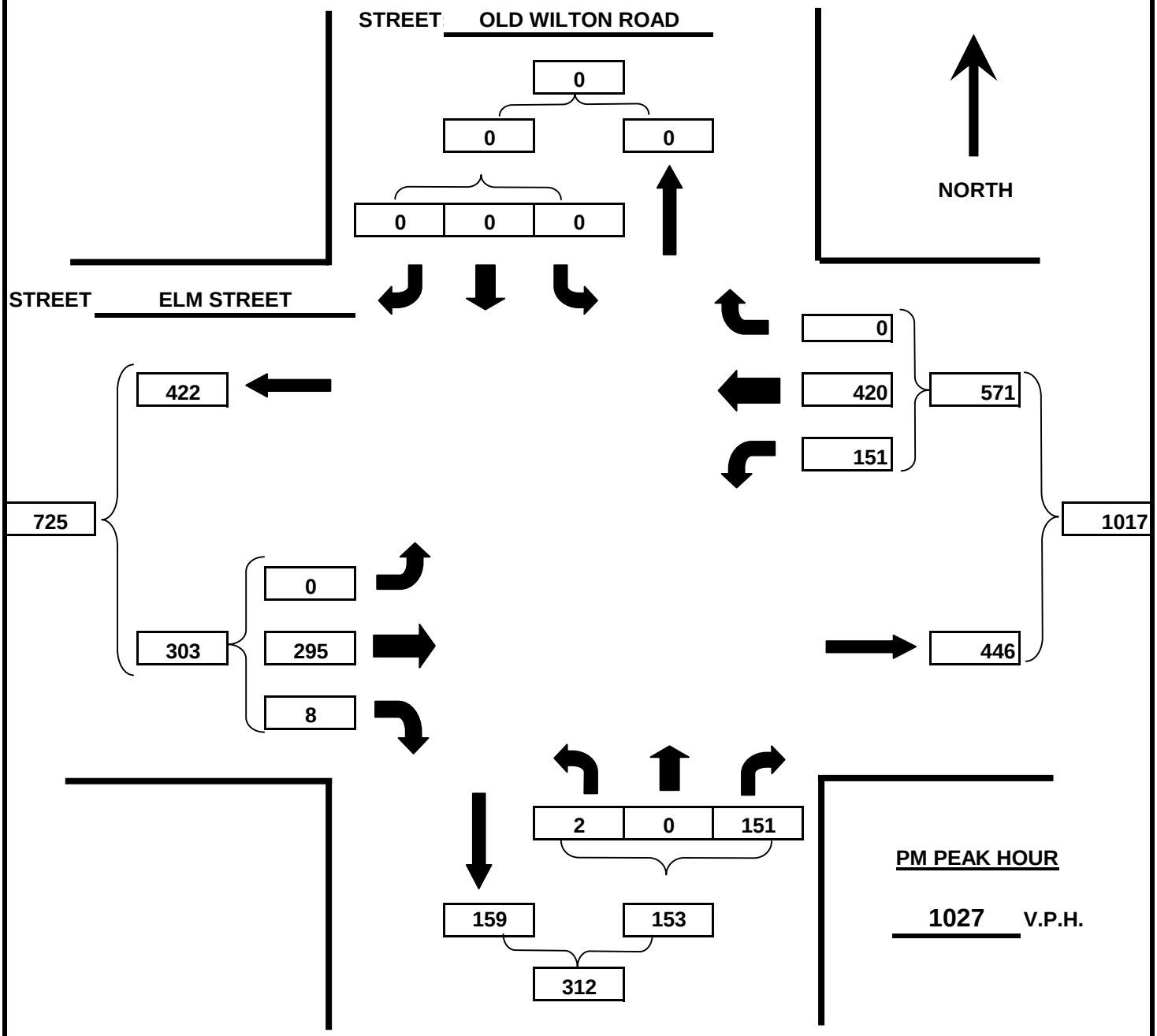

SURVEY DATE PROP. 2009 DAY OF WEEK WEATHER

PM PEAK HOUR FROM 4:30 PM TO 5:30 PM

ARCADIS

INTERSECTION SUMMARY
TURNING MOVEMENT COUNT

Project: FLETCHER'S PAINT **Date:** 11/30/2007

Location: ELM STREET & OLD WILTON ROAD **Job Number:**

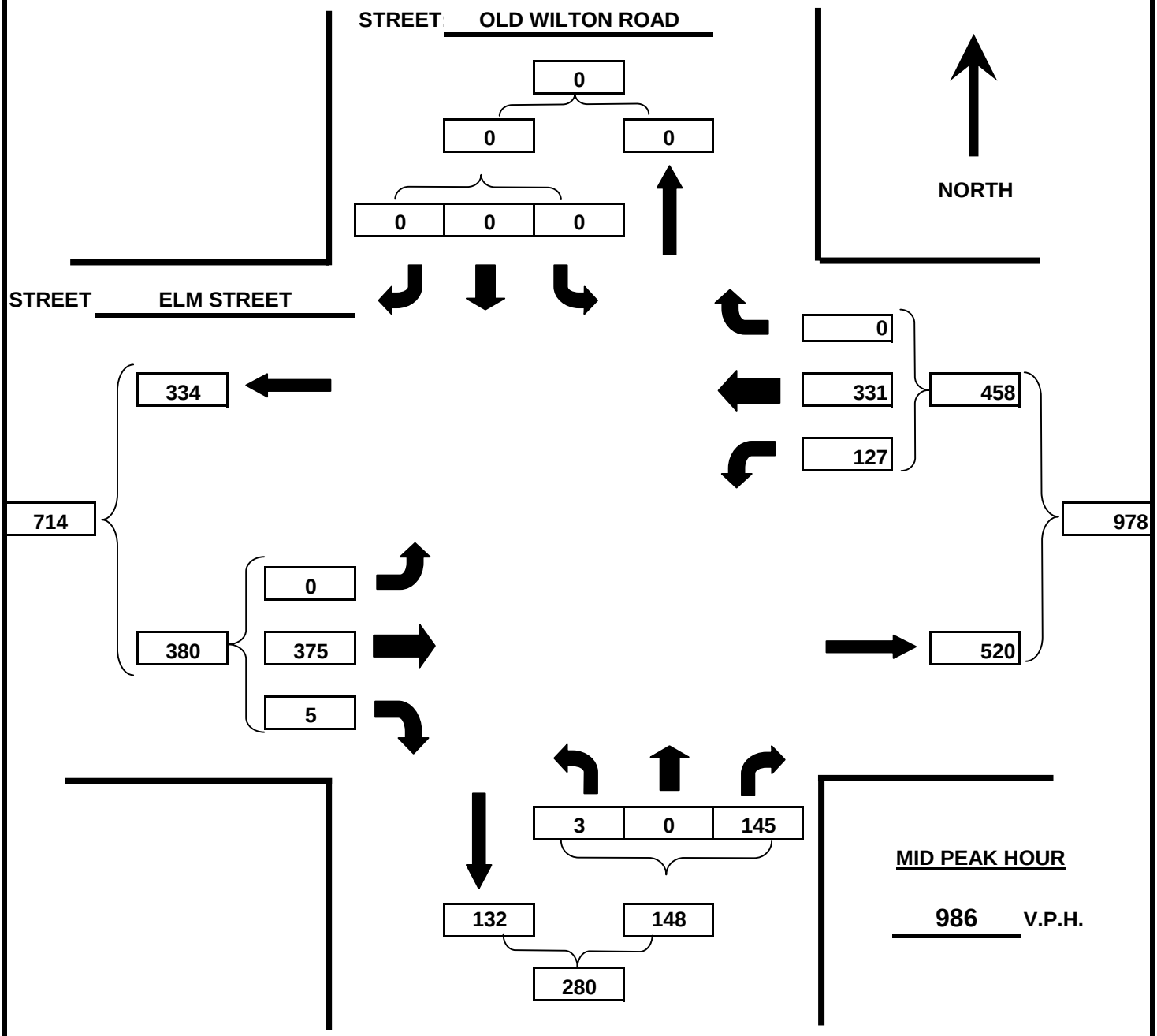

MID PEAK HOUR

986 V.P.H.

SURVEY DATE PROP. 2009 DAY OF WEEK Saturday WEATHER

MID PEAK HOUR FROM 11:30 AM TO 12:30 PM

ARCADIS

INTERSECTION SUMMARY
TURNING MOVEMENT COUNT

Project: FLETCHER'S PAINT **Date:** 11/30/2007

Location: ELM STREET & N. RIVER ROAD **Job Number:**

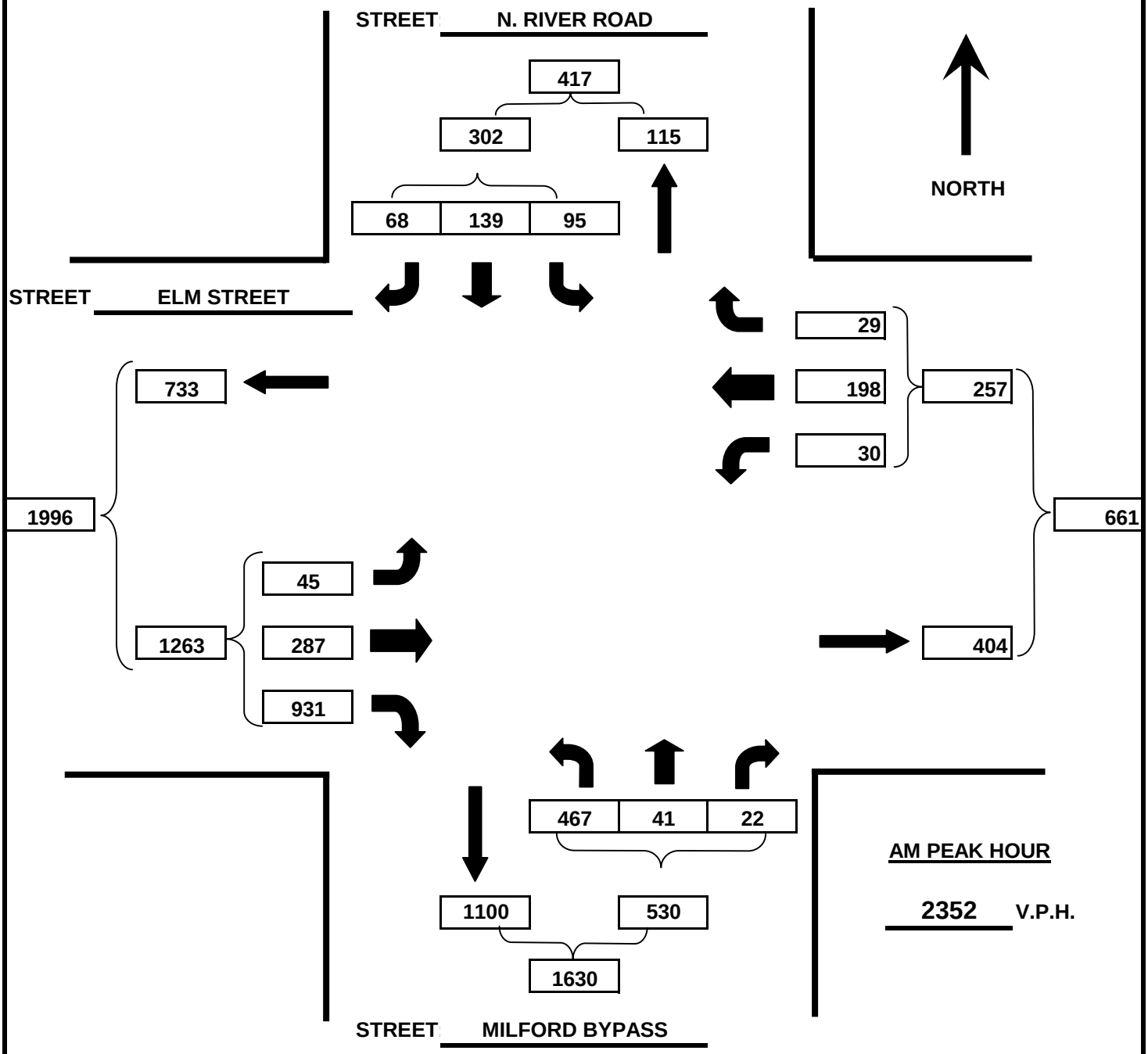

AM PEAK HOUR

2352 V.P.H.

SURVEY DATE PROP. 2009 DAY OF WEEK WEATHER

AM PEAK HOUR FROM 7:15 AM TO 8:15 AM

ARCADIS

INTERSECTION SUMMARY
TURNING MOVEMENT COUNT

Project: FLETCHER'S PAINT **Date:** 11/30/2007

Location: ELM STREET & N. RIVER ROAD **Job Number:**

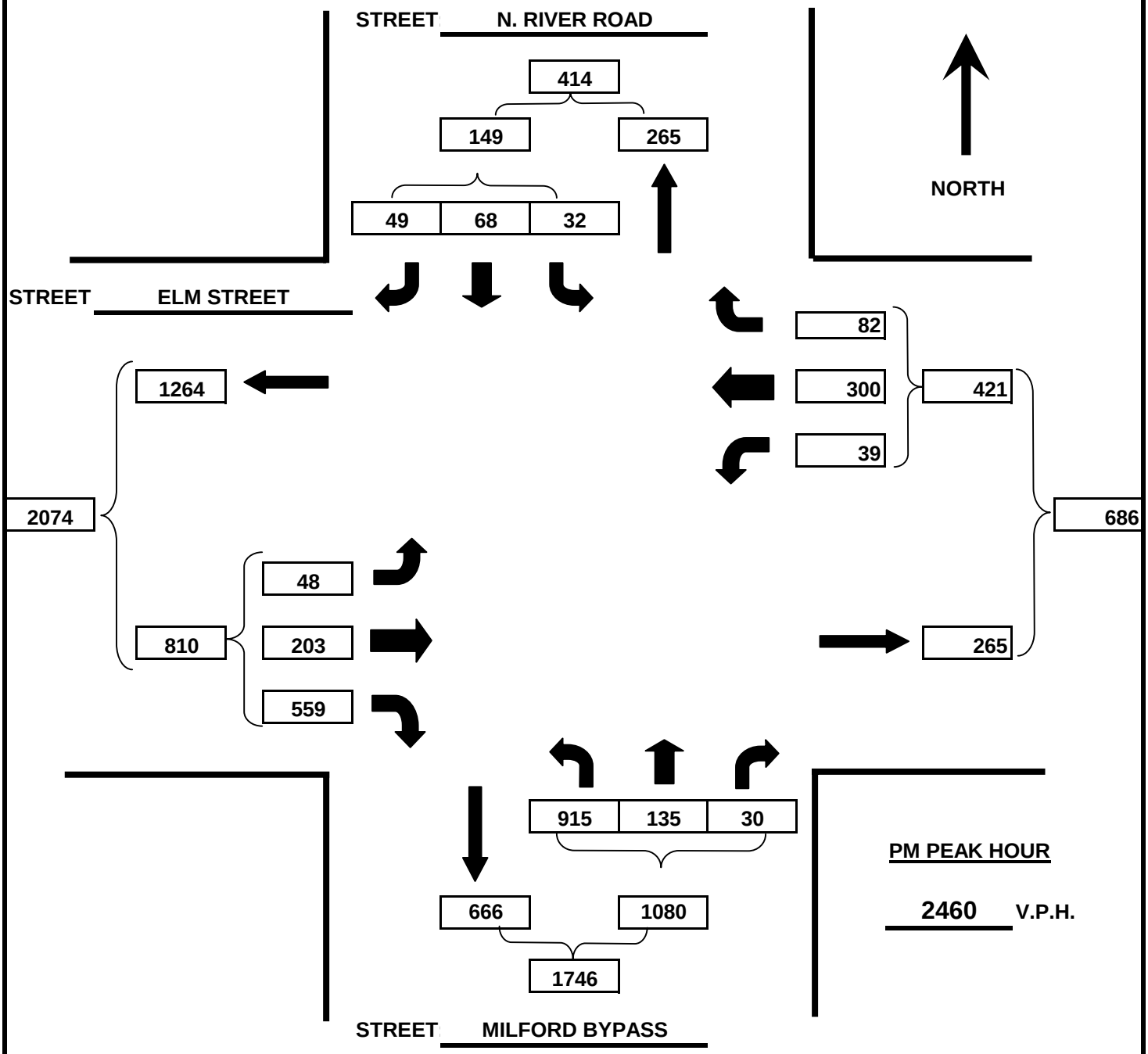

SURVEY DATE PROP. 2009 DAY OF WEEK WEATHER

PM PEAK HOUR FROM 5:00 PM TO 6:00 PM

ARCADIS

INTERSECTION SUMMARY
TURNING MOVEMENT COUNT

Project: FLETCHER'S PAINT **Date:** 11/30/2007

Location: ELM STREET & N. RIVER ROAD **Job Number:**

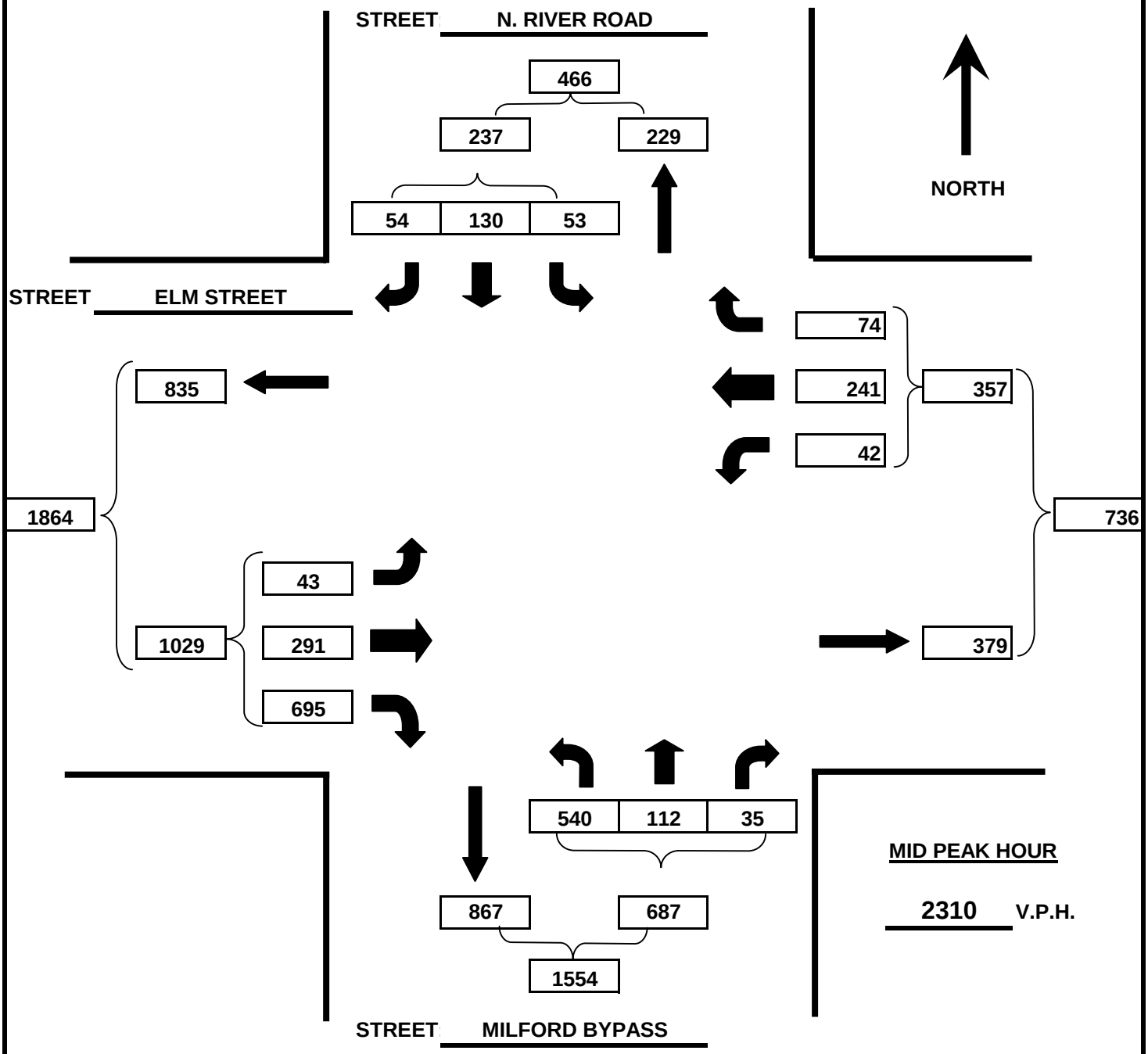

MID PEAK HOUR

2310 V.P.H.

SURVEY DATE PROP. 2009 DAY OF WEEK Saturday WEATHER

MID PEAK HOUR FROM 11:00 AM TO 12:00 PM

ARCADIS

INTERSECTION SUMMARY
TURNING MOVEMENT COUNT

Project: FLETCHER'S PAINT **Date:** 11/30/2007

Location: ELM STREET & OLD WILTON ROAD **Job Number:**

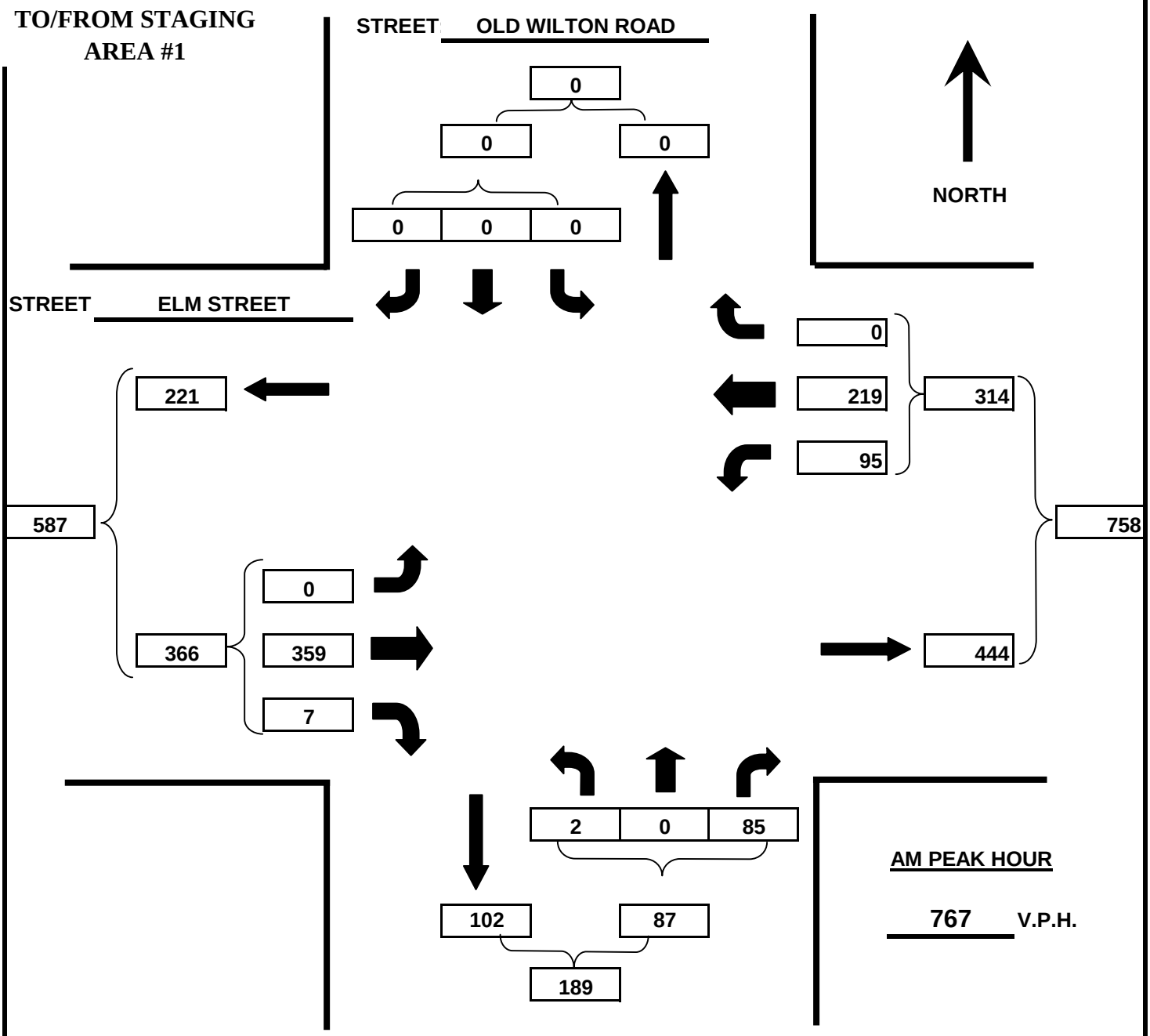

AM PEAK HOUR

767 V.P.H.

SURVEY DATE PROP. 2009 DAY OF WEEK WEATHER

AM PEAK HOUR FROM 7:15 AM TO 8:15 AM

ARCADIS

INTERSECTION SUMMARY
TURNING MOVEMENT COUNT

Project: FLETCHER'S PAINT **Date:** 11/30/2007

Location: ELM STREET & OLD WILTON ROAD **Job Number:**

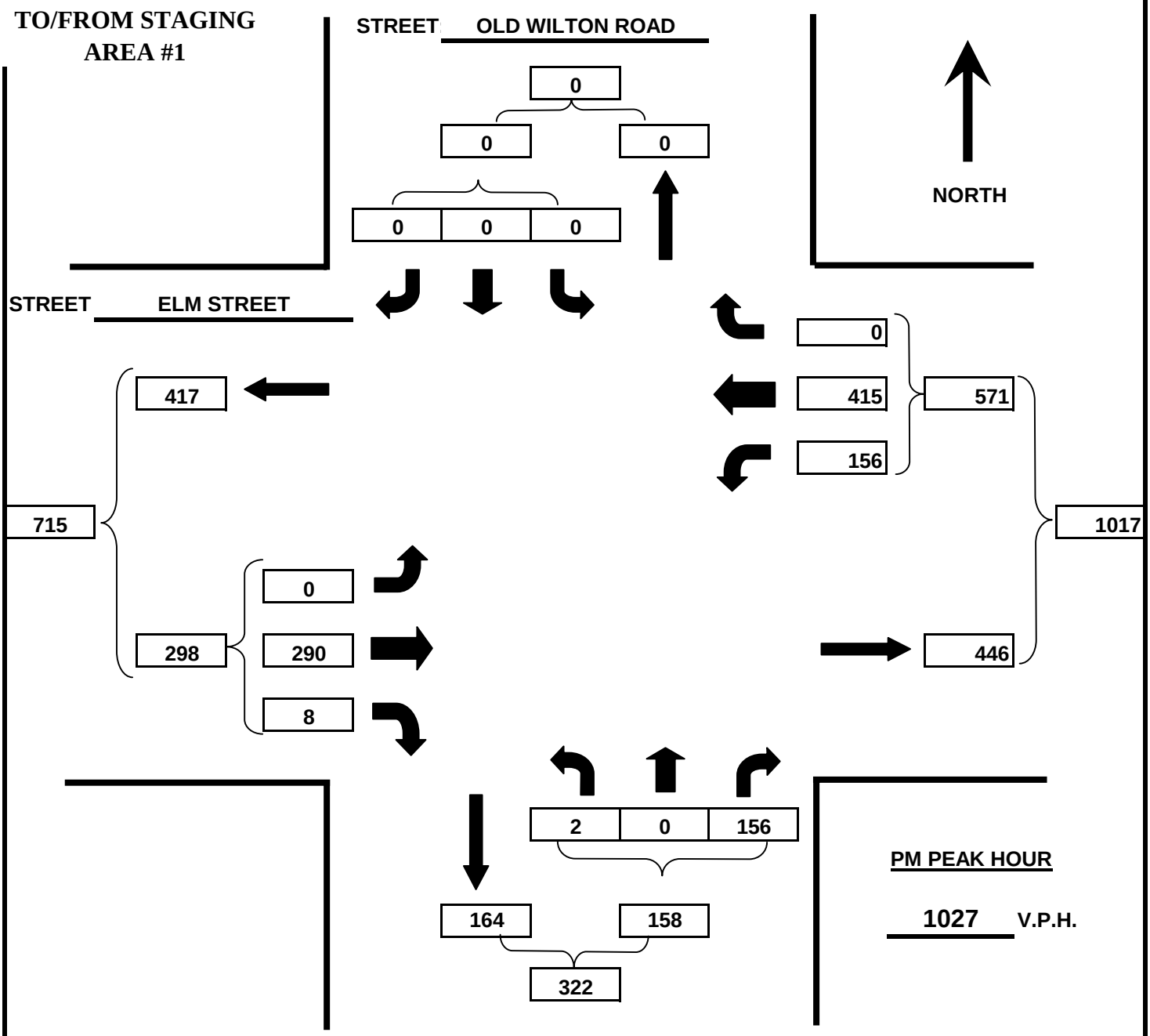

PM PEAK HOUR

1027 V.P.H.

SURVEY DATE PROP. 2009 DAY OF WEEK WEATHER

PM PEAK HOUR FROM 4:30 PM TO 5:30 PM

ARCADIS

INTERSECTION SUMMARY
TURNING MOVEMENT COUNT

Project: FLETCHER'S PAINT **Date:** 11/30/2007

Location: ELM STREET & OLD WILTON ROAD **Job Number:**

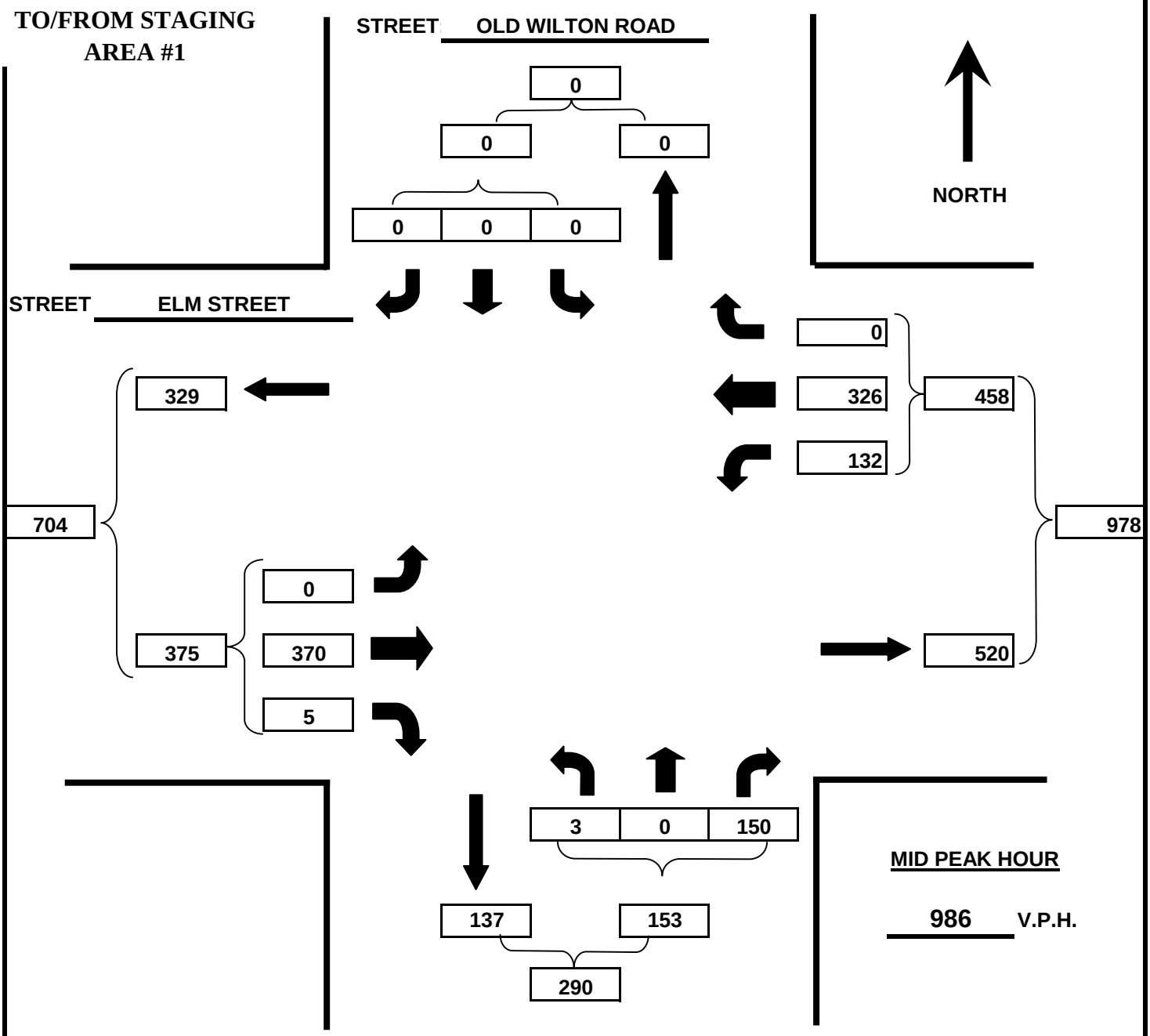

MID PEAK HOUR

986 V.P.H.

SURVEY DATE PROP. 2009 DAY OF WEEK Saturday WEATHER

MID PEAK HOUR FROM 11:30 AM TO 12:30 PM

ARCADIS

Attachment C

Peak Hour Summary Tables

Attachment C-1

Existing (2006) Peak Hour
Summary Table

Fletcher's Paint - Milford, NH - Peak Hour Analysis Traffic Count Summary - Existing 2006

Elm Street (at Cottage Street) - Cars and Trucks

		From East				From West			
Peak Hr.	**Date/Peak Hour Begins at**	Ttl Vol - Left	Ttl Vol - Thru		Ttl Vol - App. Total	Ttl Vol - Thru	Ttl Vol - Right		Ttl Vol - App. Total
AM	May 2, 2006/ 07:15	23	431		454	580	41		621
PM	May 2, 2006/ 17:00	19	751		770	583	31		614
SAT MID	May 13, 2006/ 11:45	13	603		616	545	127		672

Cottage Street (at Elm Street) - Cars and Trucks

		From South							
Peak Hr.	**Date/Peak Hour Begins at**	Ttl Vol - Left	Ttl Vol - Right		Ttl Vol - App. Total				
AM	May 2, 2006/ 07:15	24	12		36				
PM	May 2, 2006/ 17:00	29	16		45				
SAT MID	May 13, 2006/ 11:45	27	8		35				

Elm Street (at West Street) - Cars and Trucks

		From East				From West			
Peak Hr.	**Date/Peak Hour Begins at**	Ttl Vol - Left	Ttl Vol - Thru		Ttl Vol - App. Total	Ttl Vol - Thru	Ttl Vol - Right		Ttl Vol - App. Total
AM	May 2, 2006/ 07:15	108	362		470	408	86		494
PM	May 2, 2006/ 16:30	168	517		685	463	90		553
SAT MID	May 13, 2006/ 11:45	104	507		611	515	89		604

West Street (at Elm Street) - Cars and Trucks

		From South							
Peak Hr.	**Date/Peak Hour Begins at**	Ttl Vol - Left	Ttl Vol - Right		Ttl Vol - App. Total				
AM	May 2, 2006/ 07:15	140	196		336				
PM	May 2, 2006/ 16:30	115	113		228				
SAT MID	May 13, 2006/ 11:45	103	118		221				

Knight Street (at West Street) - Cars and Trucks

		From East				From West			
Peak Hr.	**Date/Peak Hour Begins at**	Ttl Vol - Left	Ttl Vol - Thru	Ttl Vol - Right	Ttl Vol - App. Total	Ttl Vol - Left	Ttl Vol - Thru	Ttl Vol - Right	Ttl Vol - App. Total
AM	November 15, 2007/ 07:00	18	2	12	32	9	6	22	37
PM	November 14, 2007/ 17:00	12	13	41	66	4		5	9
SAT MID	November 10, 2007/ 11:30	13	8	25	46	3	5	3	11

West Street (at Knight Street) - Cars and Trucks

		From North				From South			
Peak Hr.	**Date/Peak Hour Begins at**	Ttl Vol - Left	Ttl Vol - Thru	Ttl Vol - Right	Ttl Vol - App. Total	Ttl Vol - Left	Ttl Vol - Thru	Ttl Vol - Right	Ttl Vol - App. Total
AM	November 15, 2007/ 07:00	25	265	5	295	11	260	46	317
PM	November 14, 2007/ 17:00	25	138	8	171	6	151	6	163
SAT MID	November 10, 2007/ 11:30	27	140	8	175	7	119	12	138

Fletcher's Paint - Milford, NH - Peak Hour Analysis Traffic Count Summary - Existing 2006

Elm Street (at Old Wilton Road) - Cars and Trucks

		From East				From West			
Peak Hr.	**Date/Peak Hour Begins at**	Ttl Vol - Left	Ttl Vol - Thru		Ttl Vol - App. Total	Ttl Vol - Thru	Ttl Vol - Right		Ttl Vol - App. Total
AM	May 2, 2006/ 07:15	86	209		295	343	6		349
PM	May 2, 2006/ 16:30	144	396		540	277	7		284
SAT MID	May 13, 2006/ 11:30	121	311		432	353	4		357

Old Wilton Road (at Elm Street) - Cars and Trucks

		From South							
Peak Hr.	**Date/Peak Hour Begins at**	Ttl Vol - Left	Ttl Vol - Right		Ttl Vol - App. Total				
AM	May 2, 2006/ 07:15	1	76		77				
PM	May 2, 2006/ 16:30	1	144		145				
SAT MID	May 13, 2006/ 11:30	2	138		140				

Elm Street (at North River Road/Milford Bypass) - Cars and Trucks

		From East				From West			
Peak Hr.	**Date/Peak Hour Begins at**	Ttl Vol - Left	Ttl Vol - Thru	Ttl Vol - Right	Ttl Vol - App. Total	Ttl Vol - Left	Ttl Vol - Thru	Ttl Vol - Right	Ttl Vol - App. Total
AM	May 2, 2006/ 07:15	23	189	27	239	43	274	890	1207
PM	May 2, 2006/ 17:00	32	286	78	396	45	194	534	773
SAT MID	May 13, 2006/ 11:00	35	230	70	335	41	278	664	983

North River Road (at Milford Bypass and Elm Street) - Cars and Trucks

		From North							
Peak Hr.	**Date/Peak Hour Begins at**	Ttl Vol - Left	Ttl Vol - Thru	Ttl Vol - Right	Ttl Vol - App. Total				
AM	May 2, 2006/ 07:15	90	132	65	287				
PM	May 2, 2006/ 17:00	30	65	46	141				
SAT MID	May 13, 2006/ 11:00	50	124	51	225				

Milford Bypass (at North River Road and Elm Street) - Cars and Trucks

		From South							
Peak Hr.	**Date/Peak Hour Begins at**	Ttl Vol - Left	Ttl Vol - Thru	Ttl Vol - Right	Ttl Vol - App. Total				
AM	May 2, 2006/ 07:15	446	39	16	501				
PM	May 2, 2006/ 17:00	875	129	23	1027				
SAT MID	May 13, 2006/ 11:00	516	107	28	651				

Route 13 (at Lincoln Street/Parking Lot) - Cars and Trucks

		From North				From South			
Peak Hr.	**Date/Peak Hour Begins at**	Ttl Vol - Left	Ttl Vol - Thru	Ttl Vol - Right	Ttl Vol - App. Total	Ttl Vol - Left	Ttl Vol - Thru	Ttl Vol - Right	Ttl Vol - App. Total
AM	May 4, 2006/ 07:15	1	175	51	227	45	181	1	227
PM	May 10, 2006/ 16:00		225	140	365	33	299	1	333
SAT MID	May 13, 2006/ 11:00	1	216	76	293	26	261		287

Fletcher's Paint - Milford, NH - Peak Hour Analysis Traffic Count Summary - Existing 2006

Parking Lot (at Route 13 and Lincoln Street) - Cars and Trucks

		From East							
Peak Hr.	**Date/Peak Hour Begins at**	Ttl Vol - Left	Ttl Vol - Thru	Ttl Vol - Right	Ttl Vol - App. Total				
AM	May 4, 2006/ 07:15								
PM	May 10, 2006/ 16:00	1	1	2	4				
SAT MID	May 13, 2006/ 11:00	1		1	2				

Lincoln Street (at Route 13 and Parking Lot) - Cars and Trucks

		From West							
Peak Hr.	**Date/Peak Hour Begins at**	Ttl Vol - Left	Ttl Vol - Thru	Ttl Vol - Right	Ttl Vol - App. Total				
AM	May 4, 2006/ 07:15	105		38	143				
PM	May 10, 2006/ 16:00	54		28	82				
SAT MID	May 13, 2006/ 11:00	124		41	165				

Osgood Road (at Mason Road) - Cars and Trucks

		From North				From South			
Peak Hr.	**Date/Peak Hour Begins at**	Ttl Vol - Thru	Ttl Vol - Right		Ttl Vol - App. Total	Ttl Vol - Left	Ttl Vol - Thru		Ttl Vol - App. Total
AM	May 2, 2006/ 07:00	92	60		152	27	133		160
PM	May 2, 2006/ 16:30	113	74		187	100	71		171
SAT MID	May 13, 2006/ 13:00	80	50		130	41	78		119

Mason Road (at Osgood Road) - Cars and Trucks

		From West							
Peak Hr.	**Date/Peak Hour Begins at**	Ttl Vol - Left	Ttl Vol - Right		Ttl Vol - App. Total				
AM	May 2, 2006/ 07:00	135	117		252				
PM	May 2, 2006/ 16:30	56	67		123				
SAT MID	May 13, 2006/ 13:00	59	70		129				

Fletcher's Paint - Milford, NH - Peak Hour Analysis Traffic Count Summary - Existing 2006

Automatic Traffic Recorder (ATR)

Route 101A West of Cottage Street - Cars and Trucks

Peak Hr.	Date/Peak Hour Begins at	EB Ttl Vol	WB Ttl Vol
AM	Weeks of May 8, 22, 29 and June 5, 2006/ 7:00	575	429
PM	Weeks of May 8, 22, 29 and June 5, 2006/ 17:00	594	650
SAT MID	Weeks of May 8, 22, 29 and June 5, 2006/ 12:00	574	514

West Road South of Crosby Street - Cars and Trucks

Peak Hr.	Date/Peak Hour Begins at	SB Ttl Vol	NB Ttl Vol
AM	Weeks of May 8, 22, 29 and June 5, 2006/ 7:00	310	268
PM	Weeks of May 8, 22, 29 and June 5, 2006/ 14:00	193	286
SAT MID	Weeks of May 8, 22, 29 and June 5, 2006/ 12:00	155	165

Union Street South of Garden Street - Cars and Trucks

Peak Hr.	Date/Peak Hour Begins at	SB Ttl Vol	NB Ttl Vol
AM	Weeks of May 8, 22, 29 and June 5, 2006/ 7:00	203	192
PM	Weeks of May 8, 22, 29 and June 5, 2006/ 17:00	213	211
SAT MID	Weeks of May 8, 22, 29 and June 5, 2006/ 11:00	229	164

ATR peak hours and volumes are averaged for the time of the counts

Attachment C-2

Projected (2009) Existing Peak Hour Summary Table

Fletcher's Paint - Milford, NH - Peak Hour Analysis Traffic Count Summary - Projected Existing 2009

Elm Street (at Cottage Street) - Cars and Trucks

		From East				From West			
Peak Hr.	**Date/Peak Hour Begins at**	Ttl Vol - Left	Ttl Vol - Thru		Ttl Vol - App. Total	Ttl Vol - Thru	Ttl Vol - Right		Ttl Vol - App. Total
AM	May 2, 2006/ 07:15	25	451		476	607	43		650
PM	May 2, 2006/ 17:00	20	786		806	610	33		643
SAT MID	May 13, 2006/ 11:45	14	631		645	570	133		703

Cottage Street (at Elm Street) - Cars and Trucks

		From South							
Peak Hr.	**Date/Peak Hour Begins at**	Ttl Vol - Left	Ttl Vol - Right		Ttl Vol - App. Total				
AM	May 2, 2006/ 07:15	26	13		39				
PM	May 2, 2006/ 17:00	31	17		48				
SAT MID	May 13, 2006/ 11:45	29	9		38				

Elm Street (at West Street) - Cars and Trucks

		From East				From West			
Peak Hr.	**Date/Peak Hour Begins at**	Ttl Vol - Left	Ttl Vol - Thru		Ttl Vol - App. Total	Ttl Vol - Thru	Ttl Vol - Right		Ttl Vol - App. Total
AM	May 2, 2006/ 07:15	113	379		492	427	90		517
PM	May 2, 2006/ 16:30	176	541		717	485	95		580
SAT MID	May 13, 2006/ 11:45	109	531		640	539	94		633

West Street (at Elm Street) - Cars and Trucks

		From South							
Peak Hr.	**Date/Peak Hour Begins at**	Ttl Vol - Left	Ttl Vol - Right		Ttl Vol - App. Total				
AM	May 2, 2006/ 07:15	147	205		352				
PM	May 2, 2006/ 16:30	121	119		240				
SAT MID	May 13, 2006/ 11:45	108	124		232				

Knight Street (at West Street) - Cars and Trucks

		From East				From West			
Peak Hr.	**Date/Peak Hour Begins at**	Ttl Vol - Left	Ttl Vol - Thru	Ttl Vol - Right	Ttl Vol - App. Total	Ttl Vol - Left	Ttl Vol - Thru	Ttl Vol - Right	Ttl Vol - App. Total
AM	November 15, 2007/ 07:00	19	3	13	35	10	7	24	41
PM	November 14, 2007/ 17:00	13	14	43	70	5		6	11
SAT MID	November 10, 2007/ 11:30	14	9	27	50	4	6	4	14

West Street (at Knight Street) - Cars and Trucks

		From North				From South			
Peak Hr.	**Date/Peak Hour Begins at**	Ttl Vol - Left	Ttl Vol - Thru	Ttl Vol - Right	Ttl Vol - App. Total	Ttl Vol - Left	Ttl Vol - Thru	Ttl Vol - Right	Ttl Vol - App. Total
AM	November 15, 2007/ 07:00	27	278	6	311	12	272	49	333
PM	November 14, 2007/ 17:00	27	145	9	181	7	158	7	172
SAT MID	November 10, 2007/ 11:30	29	147	9	185	8	125	13	146

Fletcher's Paint - Milford, NH - Peak Hour Analysis Traffic Count Summary - Projected Existing 2009

Elm Street (at Old Wilton Road) - Cars and Trucks

		From East				From West			
Peak Hr.	**Date/Peak Hour Begins at**	Ttl Vol - Left	Ttl Vol - Thru		Ttl Vol - App. Total	Ttl Vol - Thru	Ttl Vol - Right		Ttl Vol - App. Total
AM	May 2, 2006/ 07:15	90	219		309	359	7		366
PM	May 2, 2006/ 16:30	151	415		566	290	8		298
SAT MID	May 13, 2006/ 11:30	127	326		453	370	5		375

Old Wilton Road (at Elm Street) - Cars and Trucks

		From South							
Peak Hr.	**Date/Peak Hour Begins at**	Ttl Vol - Left	Ttl Vol - Right		Ttl Vol - App. Total				
AM	May 2, 2006/ 07:15	2	80		82				
PM	May 2, 2006/ 16:30	2	151		153				
SAT MID	May 13, 2006/ 11:30	3	145		148				

Elm Street (at North River Road/Milford Bypass) - Cars and Trucks

		From East				From West			
Peak Hr.	**Date/Peak Hour Begins at**	Ttl Vol - Left	Ttl Vol - Thru	Ttl Vol - Right	Ttl Vol - App. Total	Ttl Vol - Left	Ttl Vol - Thru	Ttl Vol - Right	Ttl Vol - App. Total
AM	May 2, 2006/ 07:15	25	198	29	252	45	287	931	1263
PM	May 2, 2006/ 17:00	34	300	82	416	48	203	559	810
SAT MID	May 13, 2006/ 11:00	37	241	74	352	43	291	695	1029

North River Road (at Milford Bypass and Elm Street) - Cars and Trucks

		From North							
Peak Hr.	**Date/Peak Hour Begins at**	Ttl Vol - Left	Ttl Vol - Thru	Ttl Vol - Right	Ttl Vol - App. Total				
AM	May 2, 2006/ 07:15	95	139	68	302				
PM	May 2, 2006/ 17:00	32	68	49	149				
SAT MID	May 13, 2006/ 11:00	53	130	54	237				

Milford Bypass (at North River Road and Elm Street) - Cars and Trucks

		From South							
Peak Hr.	**Date/Peak Hour Begins at**	Ttl Vol - Left	Ttl Vol - Thru	Ttl Vol - Right	Ttl Vol - App. Total				
AM	May 2, 2006/ 07:15	467	41	17	525				
PM	May 2, 2006/ 17:00	915	135	25	1075				
SAT MID	May 13, 2006/ 11:00	540	112	30	682				

Route 13 (at Lincoln Street/Parking Lot) - Cars and Trucks

		From North				From South			
Peak Hr.	**Date/Peak Hour Begins at**	Ttl Vol - Left	Ttl Vol - Thru	Ttl Vol - Right	Ttl Vol - App. Total	Ttl Vol - Left	Ttl Vol - Thru	Ttl Vol - Right	Ttl Vol - App. Total
AM	May 4, 2006/ 07:15	2	183	54	239	48	190	2	240
PM	May 10, 2006/ 16:00		236	147	383	35	313	2	350
SAT MID	May 13, 2006/ 11:00	2	226	80	308	28	273		301

Fletcher's Paint - Milford, NH - Peak Hour Analysis Traffic Count Summary - Projected Existing 2009

Parking Lot (at Route 13 and Lincoln Street) - Cars and Trucks

		From East							
Peak Hr.	**Date/Peak Hour Begins at**	Ttl Vol - Left	Ttl Vol - Thru	Ttl Vol - Right	Ttl Vol - App. Total				
AM	May 4, 2006/ 07:15								
PM	May 10, 2006/ 16:00	2	2	3	7				
SAT MID	May 13, 2006/ 11:00	2		2	4				

Lincoln Street (at Route 13 and Parking Lot) - Cars and Trucks

		From West							
Peak Hr.	**Date/Peak Hour Begins at**	Ttl Vol - Left	Ttl Vol - Thru	Ttl Vol - Right	Ttl Vol - App. Total				
AM	May 4, 2006/ 07:15	110		40	150				
PM	May 10, 2006/ 16:00	57		30	87				
SAT MID	May 13, 2006/ 11:00	130		43	173				

Osgood Road (at Mason Road) - Cars and Trucks

		From North				From South			
Peak Hr.	**Date/Peak Hour Begins at**	Ttl Vol - Thru	Ttl Vol - Right		Ttl Vol - App. Total	Ttl Vol - Left	Ttl Vol - Thru		Ttl Vol - App. Total
AM	May 2, 2006/ 07:00	97	63		160	29	140		169
PM	May 2, 2006/ 16:30	119	78		197	105	75		180
SAT MID	May 13, 2006/ 13:00	84	53		137	43	82		125

Mason Road (at Osgood Road) - Cars and Trucks

		From West							
Peak Hr.	**Date/Peak Hour Begins at**	Ttl Vol - Left	Ttl Vol - Right		Ttl Vol - App. Total				
AM	May 2, 2006/ 07:00	142	123		265				
PM	May 2, 2006/ 16:30	59	71		130				
SAT MID	May 13, 2006/ 13:00	62	74		136				

Fletcher's Paint - Milford, NH - Peak Hour Analysis Traffic Count Summary - Projected Existing 2009

Automatic Traffic Recorder (ATR)

Route 101A West of Cottage Street - Cars and Trucks

Peak Hr.	Date/Peak Hour Begins at	EB Ttl Vol	WB Ttl Vol
AM	Weeks of May 8, 22, 29 and June 5, 2006/ 7:00	602	449
PM	Weeks of May 8, 22, 29 and June 5, 2006/ 17:00	622	680
SAT MID	Weeks of May 8, 22, 29 and June 5, 2006/ 12:00	601	538

West Road South of Crosby Street - Cars and Trucks

Peak Hr.	Date/Peak Hour Begins at	SB Ttl Vol	NB Ttl Vol
AM	Weeks of May 8, 22, 29 and June 5, 2006/ 7:00	325	281
PM	Weeks of May 8, 22, 29 and June 5, 2006/ 14:00	202	300
SAT MID	Weeks of May 8, 22, 29 and June 5, 2006/ 12:00	163	173

Union Street South of Garden Street - Cars and Trucks

Peak Hr.	Date/Peak Hour Begins at	SB Ttl Vol	NB Ttl Vol
AM	Weeks of May 8, 22, 29 and June 5, 2006/ 7:00	213	201
PM	Weeks of May 8, 22, 29 and June 5, 2006/ 17:00	223	221
SAT MID	Weeks of May 8, 22, 29 and June 5, 2006/ 11:00	240	172

ATR peak hours and volumes are averaged for the time of the counts

Attachment C-3

Projected (2009) Remedial Action
Peak Hour Summary Table

ADDITIONAL TRAFFIC GENERATED BY THE REMEDIAL ACTION PROJECT YEAR 2009

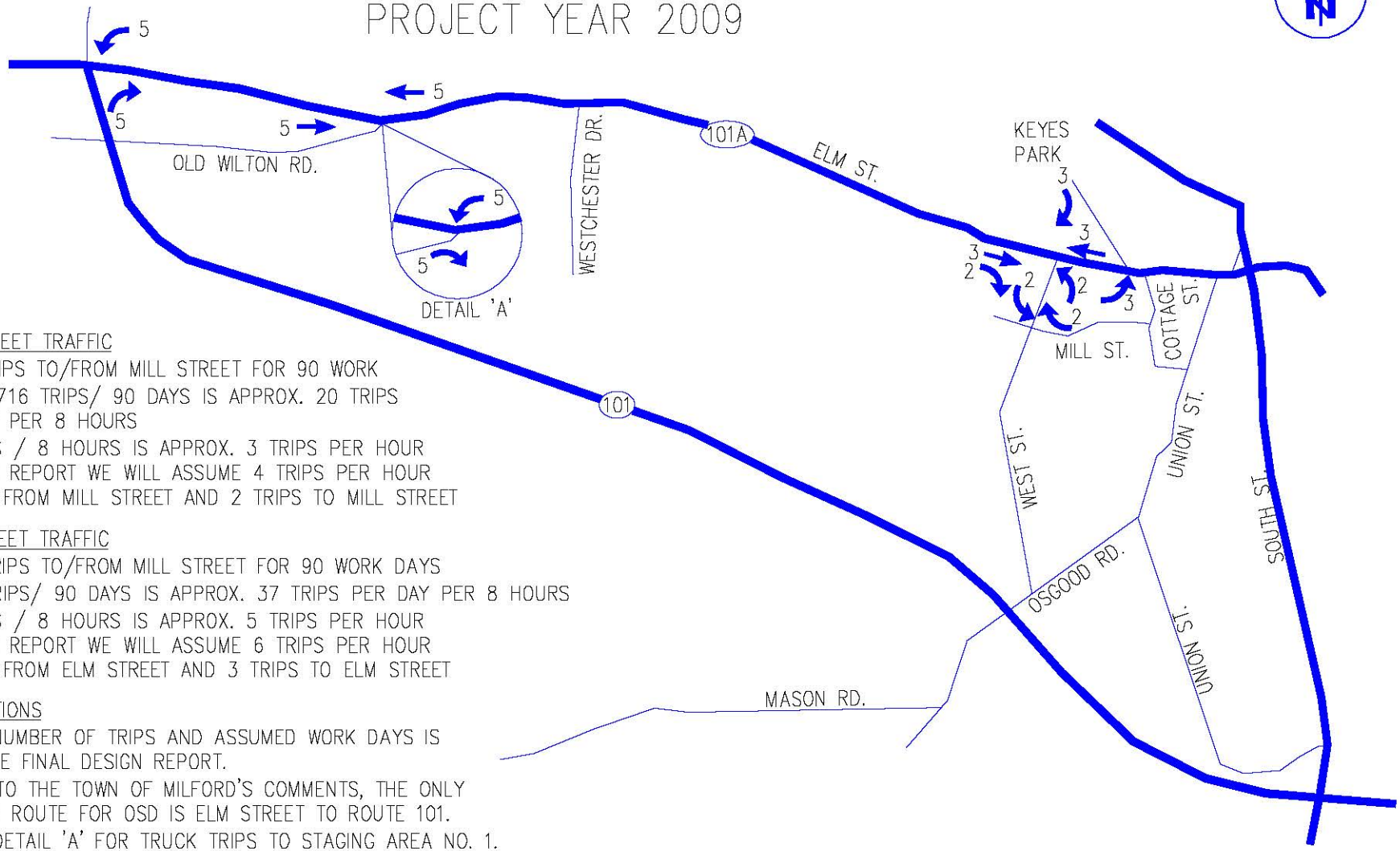

MILL STREET TRAFFIC

1,716 TRIPS TO/FROM MILL STREET FOR 90 WORK DAYS 1,716 TRIPS/ 90 DAYS IS APPROX. 20 TRIPS PER DAY PER 8 HOURS

20 TRIPS / 8 HOURS IS APPROX. 3 TRIPS PER HOUR
FOR THE REPORT WE WILL ASSUME 4 TRIPS PER HOUR
2 TRIPS FROM MILL STREET AND 2 TRIPS TO MILL STREET

ELM STREET TRAFFIC

3,276 TRIPS TO/FROM MILL STREET FOR 90 WORK DAYS

3,276 TRIPS/ 90 DAYS IS APPROX. 37 TRIPS PER DAY PER 8 HOURS

37 TRIPS / 8 HOURS IS APPROX. 5 TRIPS PER HOUR
FOR THE REPORT WE WILL ASSUME 6 TRIPS PER HOUR
3 TRIPS FROM ELM STREET AND 3 TRIPS TO ELM STREET

ASSUMPTIONS

1) THE NUMBER OF TRIPS AND ASSUMED WORK DAYS IS FROM THE FINAL DESIGN REPORT.

2) DUE TO THE TOWN OF MILFORD'S COMMENTS, THE ONLY FEASIBLE ROUTE FOR OSD IS ELM STREET TO ROUTE 101.

3) SEE DETAIL 'A' FOR TRUCK TRIPS TO STAGING AREA NO. 1.

NOT TO SCALE

THIS DRAWING IS THE PROPERTY OF ARCADIS BBL AND MAY NOT BE REPRODUCED OR ALTERED IN WHOLE OR IN PART WITHOUT THE EXPRESS WRITTEN PERMISSION OF ARCADIS BBL

ARCADIS BBL
Infrastructure, environment, facilities
ARCADIS of New York, Inc.
6723 Towpath Road
Syracuse, NY 13214

GENERAL ELECTRIC COMPANY
FLETCHER'S PAINT WORKS AND STORAGE FACILITY
SUPERFUND SITE
MILFORD, NEW HAMPSHIRE

Fletcher's Paint - Milford, NH - Peak Hour Analysis Traffic Count Summary - Remedial Action 2009

Elm Street (at West Street) - Cars and Trucks

		From East				From West			
Peak Hr.	**Date/Peak Hour Begins at**	Ttl Vol - Left	Ttl Vol - Thru		Ttl Vol - App. Total	Ttl Vol - Thru	Ttl Vol - Right		Ttl Vol - App. Total
AM	May 2, 2006/ 07:15	113	382		495	430	92		522
PM	May 2, 2006/ 16:30	176	544		720	488	97		585
SAT MID	May 13, 2006/ 11:45	109	534		643	542	96		638

West Street (at Elm Street) - Cars and Trucks

		From South							
Peak Hr.	**Date/Peak Hour Begins at**	Ttl Vol - Left	Ttl Vol - Right		Ttl Vol - App. Total				
AM	May 2, 2006/ 07:15	149	205		354				
PM	May 2, 2006/ 16:30	123	119		242				
SAT MID	May 13, 2006/ 11:45	110	124		234				

Knight Street (at West Street) - Cars and Trucks

		From East				From West			
Peak Hr.	**Date/Peak Hour Begins at**	Ttl Vol - Left	Ttl Vol - Thru	Ttl Vol - Right	Ttl Vol - App. Total	Ttl Vol - Left	Ttl Vol - Thru	Ttl Vol - Right	Ttl Vol - App. Total
AM	November 15, 2007/ 07:00	19	3	15	37	10	7	24	41
PM	November 14, 2007/ 17:00	13	14	45	72	5		6	11
SAT MID	November 10, 2007/ 11:30	14	9	29	52	4	6	4	14

West Street (at Knight Street) - Cars and Trucks

		From North				From South			
Peak Hr.	**Date/Peak Hour Begins at**	Ttl Vol - Left	Ttl Vol - Thru	Ttl Vol - Right	Ttl Vol - App. Total	Ttl Vol - Left	Ttl Vol - Thru	Ttl Vol - Right	Ttl Vol - App. Total
AM	November 15, 2007/ 07:00	29	278	6	313	12	272	49	333
PM	November 14, 2007/ 17:00	29	145	9	183	7	158	7	172
SAT MID	November 10, 2007/ 11:30	31	147	9	187	8	125	13	146

Elm Street (at Old Wilton Road) - Cars and Trucks

		From East				From West			
Peak Hr.	**Date/Peak Hour Begins at**	Ttl Vol - Left	Ttl Vol - Thru		Ttl Vol - App. Total	Ttl Vol - Thru	Ttl Vol - Right		Ttl Vol - App. Total
AM	May 2, 2006/ 07:15	90	224		314	364	7		371
PM	May 2, 2006/ 16:30	151	420		571	295	8		303
SAT MID	May 13, 2006/ 11:30	127	331		458	375	5		380

Old Wilton Road (at Elm Street) - Cars and Trucks

		From South							
Peak Hr.	**Date/Peak Hour Begins at**	Ttl Vol - Left	Ttl Vol - Right		Ttl Vol - App. Total				
AM	May 2, 2006/ 07:15	2	80		82				
PM	May 2, 2006/ 16:30	2	151		153				
SAT MID	May 13, 2006/ 11:30	3	145		148				

Fletcher's Paint - Milford, NH - Peak Hour Analysis Traffic Count Summary - Remedial Action 2009

Elm Street (at North River Road/Milford Bypass) - Cars and Trucks

		From East				From West			
Peak Hr.	**Date/Peak Hour Begins at**	Ttl Vol - Left	Ttl Vol - Thru	Ttl Vol - Right	Ttl Vol - App. Total	Ttl Vol - Left	Ttl Vol - Thru	Ttl Vol - Right	Ttl Vol - App. Total
AM	May 2, 2006/ 07:15	30	198	29	257	45	287	931	1263
PM	May 2, 2006/ 17:00	39	300	82	421	48	203	559	810
SAT MID	May 13, 2006/ 11:00	42	241	74	357	43	291	695	1029

North River Road (at Milford Bypass and Elm Street) - Cars and Trucks

		From North							
Peak Hr.	**Date/Peak Hour Begins at**	Ttl Vol - Left	Ttl Vol - Thru	Ttl Vol - Right	Ttl Vol - App. Total				
AM	May 2, 2006/ 07:15	95	139	68	302				
PM	May 2, 2006/ 17:00	32	68	49	149				
SAT MID	May 13, 2006/ 11:00	53	130	54	237				

Milford Bypass (at North River Road and Elm Street) - Cars and Trucks

		From South							
Peak Hr.	**Date/Peak Hour Begins at**	Ttl Vol - Left	Ttl Vol - Thru	Ttl Vol - Right	Ttl Vol - App. Total				
AM	May 2, 2006/ 07:15	467	41	22	530				
PM	May 2, 2006/ 17:00	915	135	30	1080				
SAT MID	May 13, 2006/ 11:00	540	112	35	687				

Trucks to/from Staging Area #1

To be conservative it is assumed the full hourly volume of trucks is traveling to and from Staging Area #1 to the sites

Elm Street (at Old Wilton Road) - Cars and Trucks

		From East				From West			
Peak Hr.	**Date/Peak Hour Begins at**	Ttl Vol - Left	Ttl Vol - Thru		Ttl Vol - App. Total	Ttl Vol - Thru	Ttl Vol - Right		Ttl Vol - App. Total
AM	May 2, 2006/ 07:15	95	219		314	359	7		366
PM	May 2, 2006/ 16:30	156	415		571	290	8		298
SAT MID	May 13, 2006/ 11:30	132	326		458	370	5		375

Old Wilton Road (at Elm Street) - Cars and Trucks

		From South							
Peak Hr.	**Date/Peak Hour Begins at**	Ttl Vol - Left	Ttl Vol - Right		Ttl Vol - App. Total				
AM	May 2, 2006/ 07:15	2	85		87				
PM	May 2, 2006/ 16:30	2	156		158				
SAT MID	May 13, 2006/ 11:30	3	150		153				

Attachment D

Existing Traffic Counts

Attachment D-1

Location Map of Traffic Volume
Data Collection Sites

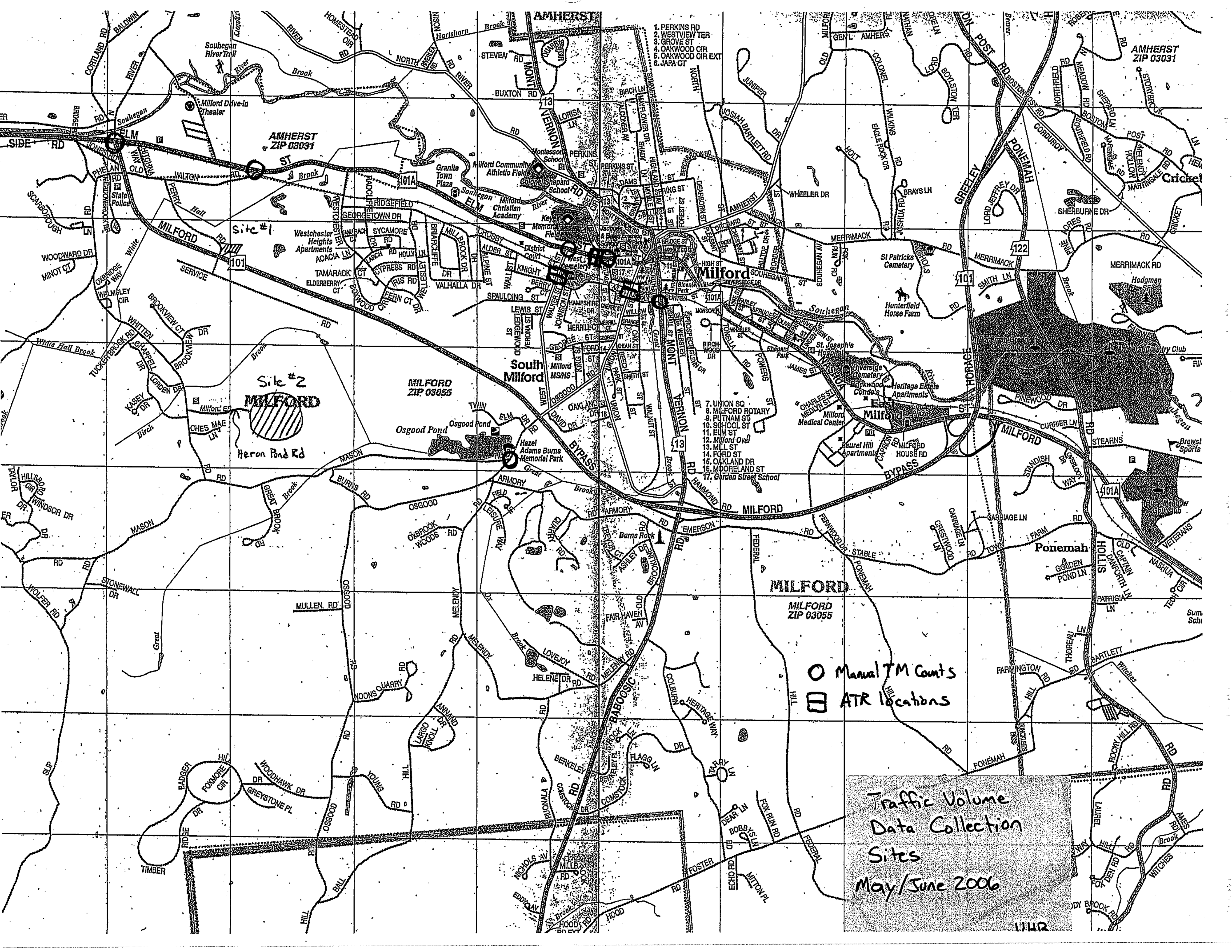
Traffic Volume
Data Collection
Sites
May/June 2006
Manual TM Counts
ATR locations
Site #1
Site #2
Heron Pond Rd
AMHERST
AMHERST ZIP 03031
MILFORD ZIP 03055
MILFORD
Milford
South Milford
East Milford
Ponemah
1. PERKINS RD
2. WESTVIEW TER
3. GROVE ST
4. OAKWOOD CIR
5. OAKWOOD CIR EXT
6. JAPA CT
7. UNION SQ
8. MILFORD ROTARY
9. PUTNAM ST
10. SCHOOL ST
11. ELM ST
12. Milford Oval
13. MILL ST
14. FORD ST
15. OAKLAND DR
16. MOORELAND ST
17. Garden Street School
Souhegan River Trail
Milford Drive-In Theater
State Police
Westchester Heights Apartments
Granite Town Plaza
Milford Community Athletic Fields
Milford Christian Academy
St Patricks Cemetery
Hunterfield Horse Farm
St. Joseph's Hospital
Riverside Cemetery
Heritage Estate Apartments
Milford Medical Center
Laurel Hill Apartments
Osgood Pond
Hazel Adams Burns Memorial Park
Burns Rock
ELM ST
MILFORD BYPASS
MONT VERNON RD
NASHUA ST
MERRIMACK RD
GREELEY
PONEMAH RD
HOLLIS
BABOOSIC
FEDERAL HILL RD
OSGOOD RD
MASON RD
EMERSON RD
ARMORY RD
HORACE GREELEY

Attachment D-2

Peak Hour Traffic Volume Counts

Attachment D-2a

Cottage Street/Elm Street
Intersection

Accurate Counts
978-664-2565

N/S Street : Cottage Street
E/W Street: Elm Street
City/State : Milford, NH
Weather : Rain

File Name : 51784001
Site Code : 51784001
Start Date : 5/2/2006
Page No : 1

Groups Printed- Cars - Trucks

	Elm St From East		Cottage St From South		Elm St From West		
Start Time	Left	Thru	Left	Right	Thru	Right	Int. Total
07:00	4	101	1	3	132	9	250
07:15	9	124	2	3	140	10	288
07:30	9	98	8	6	155	14	290
07:45	4	110	8	2	140	11	275
Total	26	433	19	14	567	44	1103
08:00	1	99	6	1	145	6	258
08:15	3	112	8	3	144	15	285
08:30	2	128	19	5	129	7	290
08:45	3	104	8	2	153	4	274
Total	9	443	41	11	571	32	1107
Grand Total	35	876	60	25	1138	76	2210
Apprch %	3.8	96.2	70.6	29.4	93.7	6.3	
Total %	1.6	39.6	2.7	1.1	51.5	3.4	
Cars	34	822	58	25	1080	71	2090
% Cars	97.1	93.8	96.7	100	94.9	93.4	94.6
Trucks	1	54	2	0	58	5	120
% Trucks	2.9	6.2	3.3	0	5.1	6.6	5.4

	Elm St From East			Cottage St From South			Elm St From West			
Start Time	Left	Thru	App. Total	Left	Right	App. Total	Thru	Right	App. Total	Int. Total
Peak Hour Analysis From 07:00 to 08:45 - Peak 1 of 1										
Peak Hour for Entire Intersection Begins at 07:15										
07:15	**9**	**124**	**133**	2	3	5	140	10	150	288
07:30	9	98	107	**8**	**6**	**14**	**155**	**14**	**169**	**290**
07:45	4	110	114	8	2	10	140	11	151	275
08:00	1	99	100	6	1	7	145	6	151	258
Total Volume	23	431	454	24	12	36	580	41	621	1111
% App. Total	5.1	94.9		66.7	33.3		93.4	6.6		
PHF	.639	.869	.853	.750	.500	.643	.935	.732	.919	.958

Peak Hour Analysis From 07:00 to 08:45 - Peak 1 of 1
Peak Hour for Each Approach Begins at:

	07:00			07:45			07:30		
+0 mins.	4	101	105	8	2	10	**155**	14	**169**
+15 mins.	**9**	**124**	**133**	6	1	7	140	11	151
+30 mins.	9	98	107	8	3	11	145	6	151
+45 mins.	4	110	114	**19**	**5**	**24**	144	**15**	159
Total Volume	26	433	459	41	11	52	584	46	630
% App. Total	5.7	94.3		78.8	21.2		92.7	7.3	
PHF	.722	.873	.863	.539	.550	.542	.942	.767	.932

Accurate Counts
978-664-2565

N/S Street : Cottage Street
E/W Street: Elm Street
City/State : Milford, NH
Weather : Rain

File Name : 51784001
Site Code : 51784001
Start Date : 5/2/2006
Page No : 1

Groups Printed- Cars

	Elm St From East		Cottage St From South		Elm St From West		
Start Time	Left	Thru	Left	Right	Thru	Right	Int. Total
07:00	4	95	1	3	131	8	242
07:15	9	117	2	3	138	10	279
07:30	8	90	7	6	146	14	271
07:45	4	101	8	2	132	10	257
Total	25	403	18	14	547	42	1049
08:00	1	95	6	1	137	6	246
08:15	3	104	8	3	134	13	265
08:30	2	121	18	5	119	6	271
08:45	3	99	8	2	143	4	259
Total	9	419	40	11	533	29	1041
Grand Total	34	822	58	25	1080	71	2090
Apprch %	4	96	69.9	30.1	93.8	6.2	
Total %	1.6	39.3	2.8	1.2	51.7	3.4	

	Elm St From East			Cottage St From South			Elm St From West			
Start Time	Left	Thru	App. Total	Left	Right	App. Total	Thru	Right	App. Total	Int. Total
Peak Hour Analysis From 07:00 to 08:45 - Peak 1 of 1										
Peak Hour for Entire Intersection Begins at 07:15										
07:15	**9**	**117**	**126**	2	3	5	138	10	148	**279**
07:30	8	90	98	7	**6**	**13**	**146**	**14**	**160**	271
07:45	4	101	105	**8**	2	10	132	10	142	257
08:00	1	95	96	6	1	7	137	6	143	246
Total Volume	22	403	425	23	12	35	553	40	593	1053
% App. Total	5.2	94.8		65.7	34.3		93.3	6.7		
PHF	.611	.861	.843	.719	.500	.673	.947	.714	.927	.944

Peak Hour Analysis From 07:00 to 08:45 - Peak 1 of 1
Peak Hour for Each Approach Begins at:

	07:45			07:45			07:15		
+0 mins.	**4**	101	105	8	2	10	138	10	148
+15 mins.	1	95	96	6	1	7	**146**	**14**	**160**
+30 mins.	3	104	107	8	3	11	132	10	142
+45 mins.	2	**121**	**123**	**18**	**5**	**23**	137	6	143
Total Volume	10	421	431	40	11	51	553	40	593
% App. Total	2.3	97.7		78.4	21.6		93.3	6.7	
PHF	.625	.870	.876	.556	.550	.554	.947	.714	.927

Accurate Counts
978-664-2565

N/S Street : Cottage Street
E/W Street: Elm Street
City/State : Milford, NH
Weather : Rain

File Name : 51784001
Site Code : 51784001
Start Date : 5/2/2006
Page No : 1

Groups Printed- Trucks

	Elm St From East		Cottage St From South		Elm St From West		
Start Time	Left	Thru	Left	Right	Thru	Right	Int. Total
07:00	0	6	0	0	1	1	8
07:15	0	7	0	0	2	0	9
07:30	1	8	1	0	9	0	19
07:45	0	9	0	0	8	1	18
Total	1	30	1	0	20	2	54
08:00	0	4	0	0	8	0	12
08:15	0	8	0	0	10	2	20
08:30	0	7	1	0	10	1	19
08:45	0	5	0	0	10	0	15
Total	0	24	1	0	38	3	66
Grand Total	1	54	2	0	58	5	120
Apprch %	1.8	98.2	100	0	92.1	7.9	
Total %	0.8	45	1.7	0	48.3	4.2	

	Elm St From East			Cottage St From South			Elm St From West			
Start Time	Left	Thru	App. Total	Left	Right	App. Total	Thru	Right	App. Total	Int. Total
Peak Hour Analysis From 07:00 to 08:45 - Peak 1 of 1										
Peak Hour for Entire Intersection Begins at 07:30										
07:30	**1**	8	**9**	**1**	0	**1**	9	0	9	19
07:45	0	**9**	9	0	0	0	8	1	9	18
08:00	0	4	4	0	0	0	8	0	8	12
08:15	0	8	8	0	0	0	**10**	**2**	**12**	**20**
Total Volume	1	29	30	1	0	1	35	3	38	69
% App. Total	3.3	96.7		100	0		92.1	7.9		
PHF	.250	.806	.833	.250	.000	.250	.875	.375	.792	.863

Peak Hour Analysis From 07:00 to 08:45 - Peak 1 of 1
Peak Hour for Each Approach Begins at:

	07:00			07:00			08:00		
+0 mins.	0	6	6	0	0	0	8	0	8
+15 mins.	0	7	7	0	0	0	**10**	**2**	**12**
+30 mins.	**1**	8	**9**	**1**	0	**1**	10	1	11
+45 mins.	0	**9**	9	0	0	0	10	0	10
Total Volume	1	30	31	1	0	1	38	3	41
% App. Total	3.2	96.8		100	0		92.7	7.3	
PHF	.250	.833	.861	.250	.000	.250	.950	.375	.854

Accurate Counts
978-664-2565

N/S Street : Cottage Street
E/W Street: Elm Street
City/State : Milford, NH
Weather : Rain

File Name : 51784001
Site Code : 51784001
Start Date : 5/2/2006
Page No : 1

	Elm St From East			Cottage St From South			Elm St From West			
Start Time	Left	Thru	App Total	Left	Right	App. Total	Thru	Right	App. Total	Int. Total
Peak Hour Analysis From 07:00 to 08:45 - Peak 1 of 1										
Peak Hour for Entire Intersection Begins at 07:15										
07:15	**9**	**124**	**133**	2	3	5	140	10	150	288
07:30	9	98	107	**8**	**6**	**14**	**155**	**14**	**169**	**290**
07:45	4	110	114	8	2	10	140	11	151	275
08:00	1	99	100	6	1	7	145	6	151	258
Total Volume	23	431	454	24	12	36	580	41	621	1111
% App. Total	5.1	94.9		66.7	33.3		93.4	6.6		
PHF	.639	.869	.853	.750	.500	.643	.935	.732	.919	.958

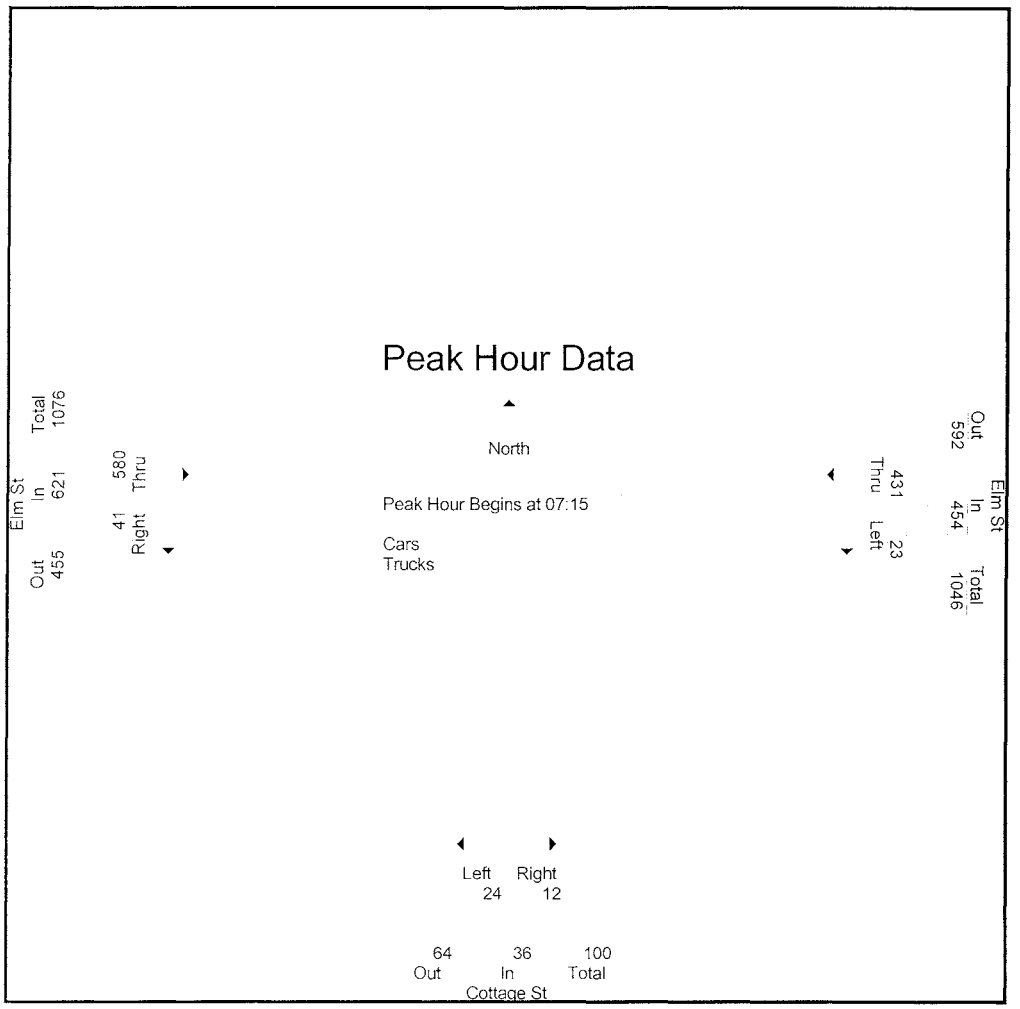

Accurate Counts
978-664-2565

N/S Street : Cottage Street
E/W Street: Elm Street
City/State : Milford, NH
Weather : Rain

File Name : 51784001
Site Code : 51784001
Start Date : 5/2/2006
Page No : 1

	Elm St From East			Cottage St From South			Elm St From West			
Start Time	Left	Thru	App. Total	Left	Right	App. Total	Thru	Right	App. Total	Int. Total
Peak Hour Analysis From 07:00 to 08:45 - Peak 1 of 1										
Peak Hour for Entire Intersection Begins at 07:15										
07:15	**9**	**117**	**126**	2	3	5	138	10	148	**279**
07:30	8	90	98	7	**6**	**13**	**146**	**14**	**160**	271
07:45	4	101	105	**8**	2	10	132	10	142	257
08:00	1	95	96	6	1	7	137	6	143	246
Total Volume	22	403	425	23	12	35	553	40	593	1053
% App. Total	5.2	94.8		65.7	34.3		93.3	6.7		
PHF	.611	.861	.843	.719	.500	.673	.947	.714	.927	.944

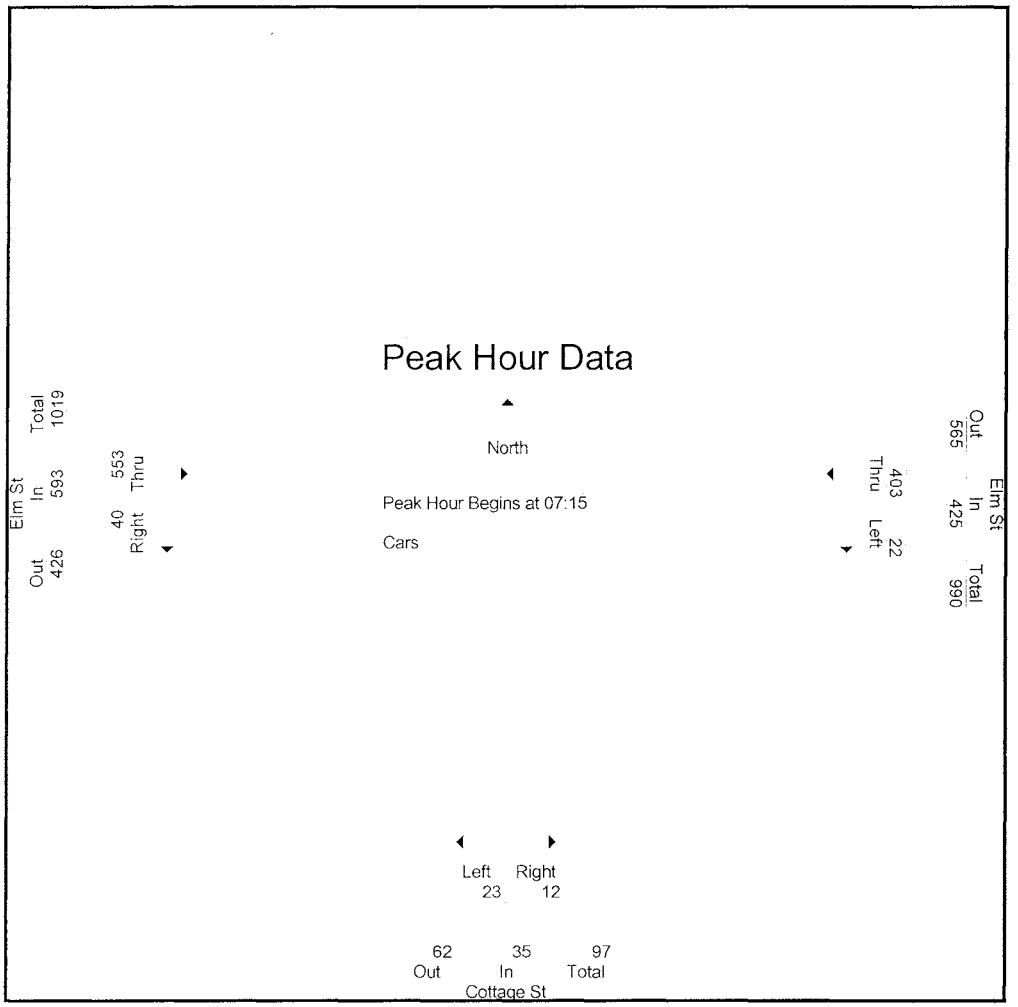

Accurate Counts
978-664-2565

N/S Street : Cottage Street
E/W Street: Elm Street
City/State : Milford, NH
Weather : Rain

File Name : 51784001
Site Code : 51784001
Start Date : 5/2/2006
Page No : 1

	Elm St From East			Cottage St From South			Elm St From West			
Start Time	Left	Thru	App. Total	Left	Right	App. Total	Thru	Right	App. Total	Int. Total
Peak Hour Analysis From 07:00 to 08:45 - Peak 1 of 1										
Peak Hour for Entire Intersection Begins at 07:30										
07:30	**1**	8	**9**	**1**	0	**1**	9	0	9	19
07:45	0	**9**	9	0	0	0	8	1	9	18
08:00	0	4	4	0	0	0	8	0	8	12
08:15	0	8	8	0	0	0	**10**	**2**	**12**	**20**
Total Volume	1	29	30	1	0	1	35	3	38	69
% App. Total	3.3	96.7		100	0		92.1	7.9		
PHF	.250	.806	.833	.250	.000	.250	.875	.375	.792	.863

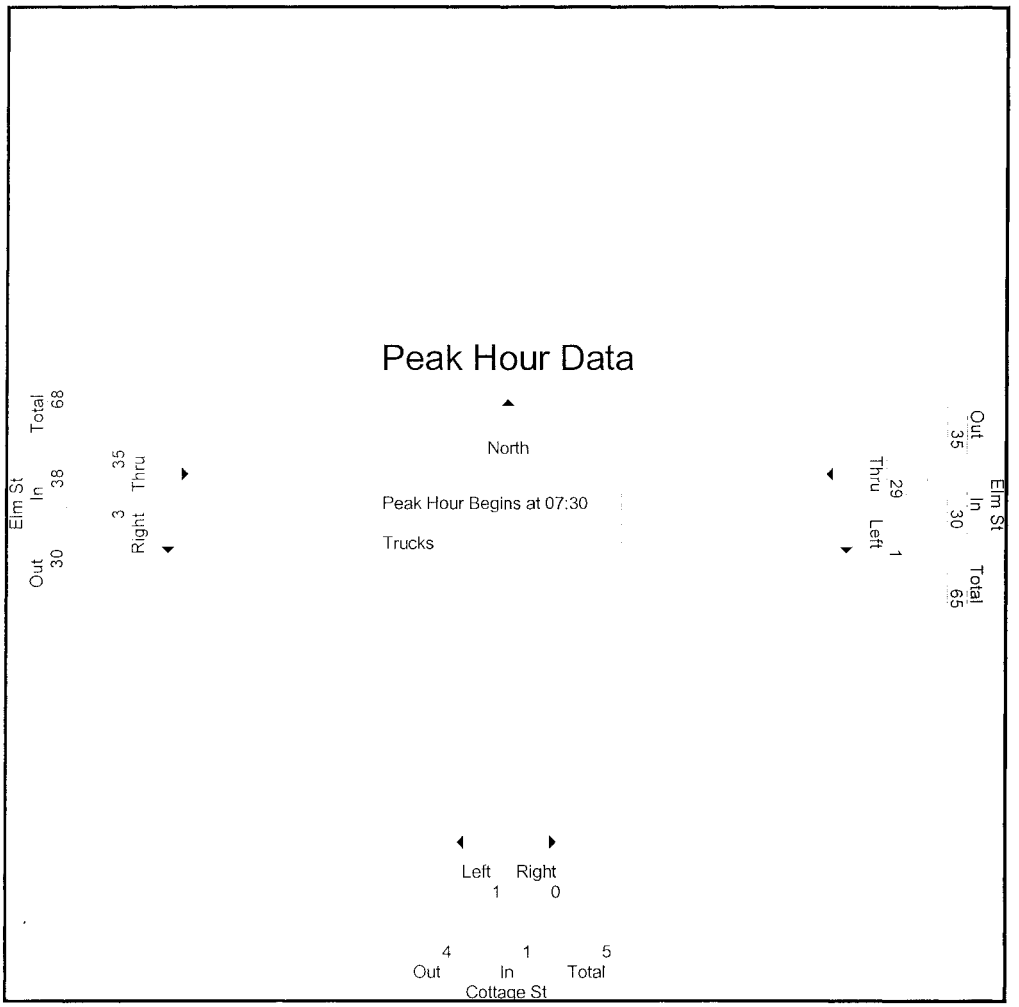

Accurate Counts
978-664-2565

N/S Street : Cottage Street
E/W Street: Elm Street
City/State : Milford, NH
Weather : Rain

File Name : 51784001
Site Code : 51784001
Start Date : 5/2/2006
Page No : 1

Groups Printed- Cars - Trucks

	Elm St From East		Cottage St From South		Elm St From West		
Start Time	Left	Thru	Left	Right	Thru	Right	Int. Total
16:00	8	157	7	2	144	10	328
16:15	7	167	1	1	128	8	312
16:30	5	168	3	6	142	10	334
16:45	6	155	7	2	135	5	310
Total	26	647	18	11	549	33	1284
17:00	6	205	12	3	166	9	401
17:15	3	201	6	6	154	10	380
17:30	2	171	3	1	149	5	331
17:45	8	174	8	6	114	7	317
Total	19	751	29	16	583	31	1429
Grand Total	45	1398	47	27	1132	64	2713
Apprch %	3.1	96.9	63.5	36.5	94.6	5.4	
Total %	1.7	51.5	1.7	1	41.7	2.4	
Cars	44	1376	46	27	1118	63	2674
% Cars	97.8	98.4	97.9	100	98.8	98.4	98.6
Trucks	1	22	1	0	14	1	39
% Trucks	2.2	1.6	2.1	0	1.2	1.6	1.4

	Elm St From East			Cottage St From South			Elm St From West			
Start Time	Left	Thru	App. Total	Left	Right	App. Total	Thru	Right	App. Total	Int. Total
Peak Hour Analysis From 16:00 to 17:45 - Peak 1 of 1										
Peak Hour for Entire Intersection Begins at 17:00										
17:00	6	**205**	**211**	**12**	3	**15**	**166**	9	**175**	**401**
17:15	3	201	204	6	**6**	12	154	**10**	164	380
17:30	2	171	173	3	1	4	149	5	154	331
17:45	**8**	174	182	8	6	14	114	7	121	317
Total Volume	19	751	770	29	16	45	583	31	614	1429
% App. Total	2.5	97.5		64.4	35.6		95	5		
PHF	.594	.916	.912	.604	.667	.750	.878	.775	.877	.891

Peak Hour Analysis From 16:00 to 17:45 - Peak 1 of 1
Peak Hour for Each Approach Begins at:

	17:00			16:30			16:45		
+0 mins.	6	**205**	**211**	3	**6**	9	135	5	140
+15 mins.	3	201	204	7	2	9	**166**	9	**175**
+30 mins.	2	171	173	**12**	3	**15**	154	**10**	164
+45 mins.	**8**	174	182	6	6	12	149	5	154
Total Volume	19	751	770	28	17	45	604	29	633
% App. Total	2.5	97.5		62.2	37.8		95.4	4.6	
PHF	.594	.916	.912	.583	.708	.750	.910	.725	.904

Accurate Counts
978-664-2565

N/S Street : Cottage Street
E/W Street: Elm Street
City/State : Milford, NH
Weather : Rain

File Name : 51784001
Site Code : 51784001
Start Date : 5/2/2006
Page No : 1

Groups Printed- Cars

	Elm St From East		Cottage St From South		Elm St From West		
Start Time	Left	Thru	Left	Right	Thru	Right	Int. Total
16:00	7	153	7	2	140	9	318
16:15	7	163	0	1	126	8	305
16:30	5	164	3	6	140	10	328
16:45	6	151	7	2	133	5	304
Total	25	631	17	11	539	32	1255
17:00	6	203	12	3	165	9	398
17:15	3	199	6	6	153	10	377
17:30	2	170	3	1	148	5	329
17:45	8	173	8	6	113	7	315
Total	19	745	29	16	579	31	1419
Grand Total	44	1376	46	27	1118	63	2674
Apprch %	3.1	96.9	63	37	94.7	5.3	
Total %	1.6	51.5	1.7	1	41.8	2.4	

	Elm St From East			Cottage St From South			Elm St From West			
Start Time	Left	Thru	App. Total	Left	Right	App. Total	Thru	Right	App. Total	Int. Total
Peak Hour Analysis From 16:00 to 17:45 - Peak 1 of 1										
Peak Hour for Entire Intersection Begins at 17:00										
17:00	6	**203**	**209**	**12**	3	**15**	**165**	9	**174**	**398**
17:15	3	199	202	6	**6**	12	153	**10**	163	377
17:30	2	170	172	3	1	4	148	5	153	329
17:45	**8**	173	181	8	6	14	113	7	120	315
Total Volume	19	745	764	29	16	45	579	31	610	1419
% App. Total	2.5	97.5		64.4	35.6		94.9	5.1		
PHF	.594	.917	.914	.604	.667	.750	.877	.775	.876	.891

Peak Hour Analysis From 16:00 to 17:45 - Peak 1 of 1
Peak Hour for Each Approach Begins at:

	17:00			16:30			16:45		
+0 mins.	6	**203**	**209**	3	**6**	9	133	5	138
+15 mins.	3	199	202	7	2	9	**165**	9	**174**
+30 mins.	2	170	172	**12**	3	**15**	153	**10**	163
+45 mins.	**8**	173	181	6	6	12	148	5	153
Total Volume	19	745	764	28	17	45	599	29	628
% App. Total	2.5	97.5		62.2	37.8		95.4	4.6	
PHF	.594	.917	.914	.583	.708	.750	.908	.725	.902

Accurate Counts
978-664-2565

N/S Street : Cottage Street
E/W Street: Elm Street
City/State : Milford, NH
Weather : Rain

File Name : 51784001
Site Code : 51784001
Start Date : 5/2/2006
Page No : 1

Groups Printed- Trucks

	Elm St From East		Cottage St From South		Elm St From West		
Start Time	Left	Thru	Left	Right	Thru	Right	Int. Total
16:00	1	4	0	0	4	1	10
16:15	0	4	1	0	2	0	7
16:30	0	4	0	0	2	0	6
16:45	0	4	0	0	2	0	6
Total	1	16	1	0	10	1	29
17:00	0	2	0	0	1	0	3
17:15	0	2	0	0	1	0	3
17:30	0	1	0	0	1	0	2
17:45	0	1	0	0	1	0	2
Total	0	6	0	0	4	0	10
Grand Total	1	22	1	0	14	1	39
Apprch %	4.3	95.7	100	0	93.3	6.7	
Total %	2.6	56.4	2.6	0	35.9	2.6	

	Elm St From East			Cottage St From South			Elm St From West			
Start Time	Left	Thru	App. Total	Left	Right	App. Total	Thru	Right	App. Total	Int. Total
Peak Hour Analysis From 16:00 to 17:45 - Peak 1 of 1										
Peak Hour for Entire Intersection Begins at 16:00										
16:00	**1**	**4**	**5**	0	0	0	**4**	**1**	**5**	**10**
16:15	0	4	4	**1**	0	**1**	2	0	2	7
16:30	0	4	4	0	0	0	2	0	2	6
16:45	0	4	4	0	0	0	2	0	2	6
Total Volume	1	16	17	1	0	1	10	1	11	29
% App. Total	5.9	94.1		100	0		90.9	9.1		
PHF	.250	1.000	.850	.250	.000	.250	.625	.250	.550	.725

Peak Hour Analysis From 16:00 to 17:45 - Peak 1 of 1
Peak Hour for Each Approach Begins at:

	16:00			16:00			16:00		
+0 mins.	**1**	**4**	**5**	0	0	0	**4**	**1**	**5**
+15 mins.	0	4	4	**1**	0	**1**	2	0	2
+30 mins.	0	4	4	0	0	0	2	0	2
+45 mins.	0	4	4	0	0	0	2	0	2
Total Volume	1	16	17	1	0	1	10	1	11
% App. Total	5.9	94.1		100	0		90.9	9.1	
PHF	.250	1.000	.850	.250	.000	.250	.625	.250	.550

Accurate Counts
978-664-2565

N/S Street : Cottage Street
E/W Street: Elm Street
City/State : Milford, NH
Weather : Rain

File Name : 51784001
Site Code : 51784001
Start Date : 5/2/2006
Page No : 1

	Elm St From East			Cottage St From South			Elm St From West			
Start Time	Left	Thru	App. Total	Left	Right	App. Total	Thru	Right	App. Total	Int. Total
Peak Hour Analysis From 16:00 to 17:45 - Peak 1 of 1										
Peak Hour for Entire Intersection Begins at 17:00										
17:00	6	**205**	**211**	**12**	3	**15**	**166**	9	**175**	**401**
17:15	3	201	204	6	**6**	12	154	**10**	164	380
17:30	2	171	173	3	1	4	149	5	154	331
17:45	**8**	174	182	8	6	14	114	7	121	317
Total Volume	19	751	770	29	16	45	583	31	614	1429
% App. Total	2.5	97.5		64.4	35.6		95	5		
PHF	.594	.916	.912	.604	.667	.750	.878	.775	.877	.891

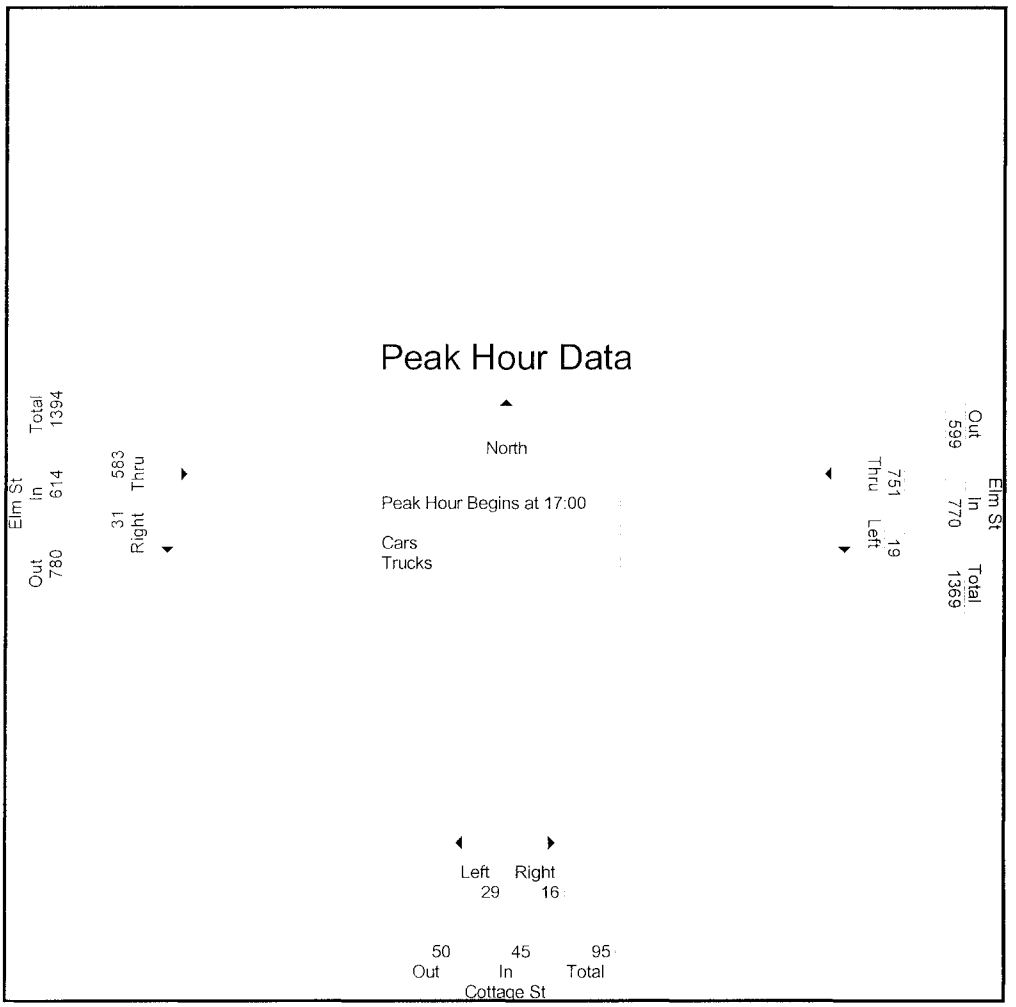

Accurate Counts
978-664-2565

N/S Street : Cottage Street
E/W Street: Elm Street
City/State : Milford, NH
Weather : Rain

File Name : 51784001
Site Code : 51784001
Start Date : 5/2/2006
Page No : 1

	Elm St From East			Cottage St From South			Elm St From West			
Start Time	Left	Thru	App. Total	Left	Right	App. Total	Thru	Right	App. Total	Int. Total
Peak Hour Analysis From 16:00 to 17:45 - Peak 1 of 1										
Peak Hour for Entire Intersection Begins at 17:00										
17:00	6	**203**	**209**	**12**	3	**15**	**165**	9	**174**	**398**
17:15	3	199	202	6	**6**	12	153	**10**	163	377
17:30	2	170	172	3	1	4	148	5	153	329
17:45	**8**	173	181	8	6	14	113	7	120	315
Total Volume	19	745	764	29	16	45	579	31	610	1419
% App. Total	2.5	97.5		64.4	35.6		94.9	5.1		
PHF	.594	.917	.914	.604	.667	.750	.877	.775	.876	.891

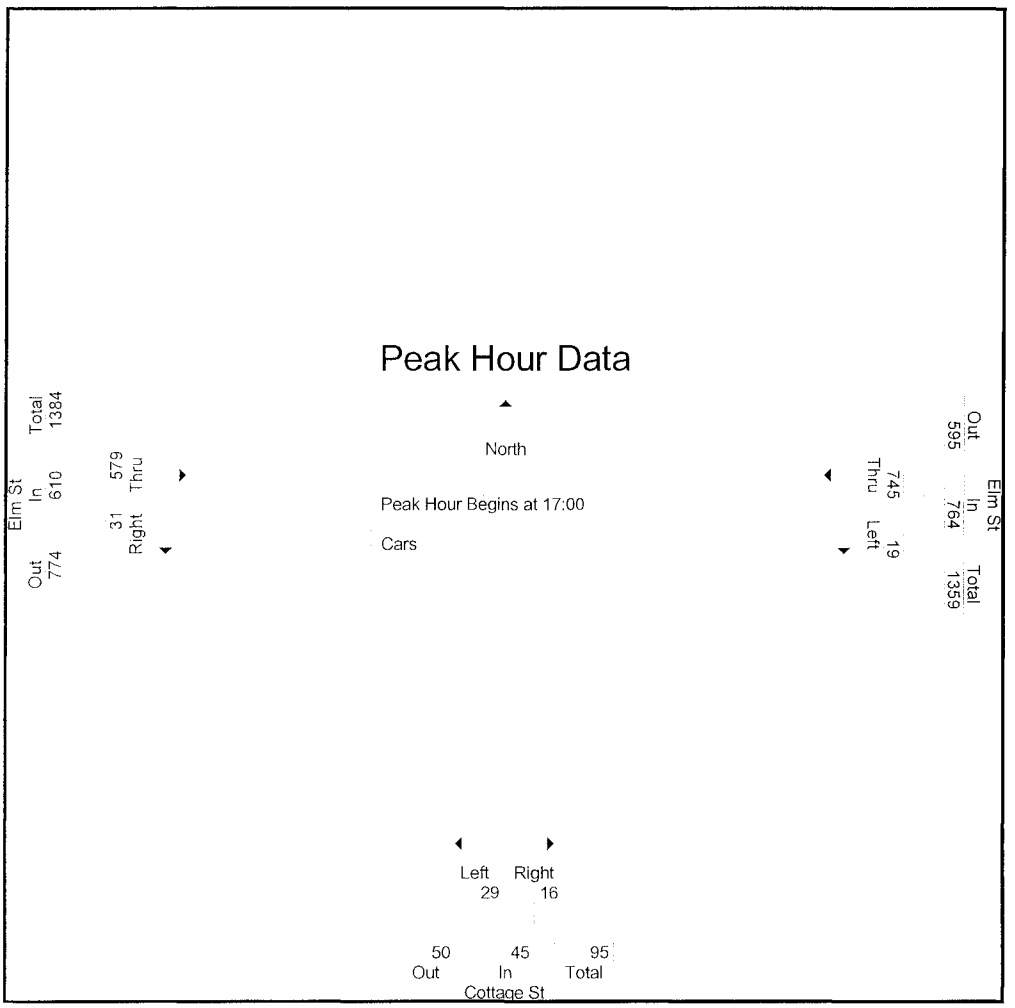

Accurate Counts
978-664-2565

N/S Street : Cottage Street
E/W Street: Elm Street
City/State : Milford, NH
Weather : Rain

File Name : 51784001
Site Code : 51784001
Start Date : 5/2/2006
Page No : 1

	Elm St From East			Cottage St From South			Elm St From West			
Start Time	Left	Thru	App. Total	Left	Right	App. Total	Thru	Right	App. Total	Int. Total
Peak Hour Analysis From 16:00 to 17:45 - Peak 1 of 1										
Peak Hour for Entire Intersection Begins at 16:00										
16:00	**1**	**4**	**5**	0	0	0	**4**	**1**	**5**	**10**
16:15	0	4	4	**1**	0	**1**	2	0	2	7
16:30	0	4	4	0	0	0	2	0	2	6
16:45	0	4	4	0	0	0	2	0	2	6
Total Volume	1	16	17	1	0	1	10	1	11	29
% App. Total	5.9	94.1		100	0		90.9	9.1		
PHF	.250	1.000	.850	.250	.000	.250	.625	.250	.550	.725

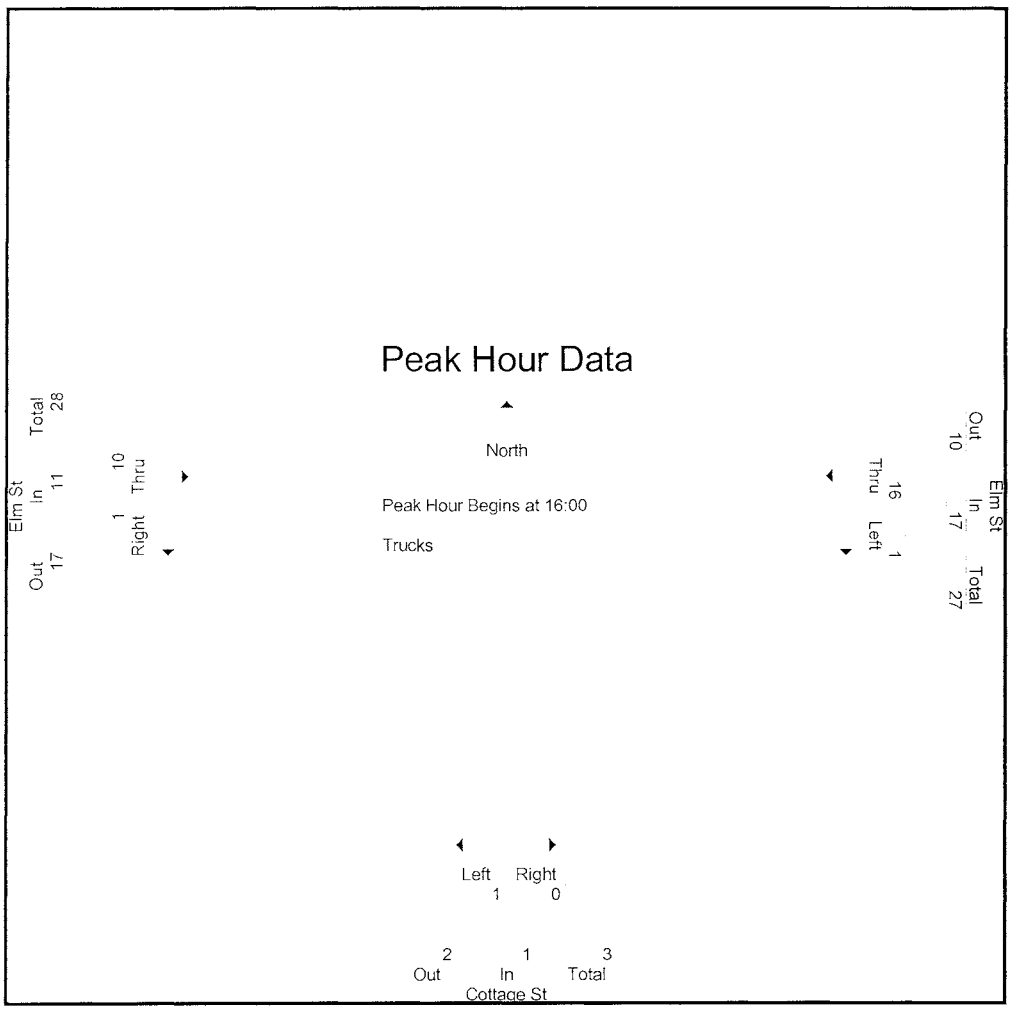

Accurate Counts
978-664-2565

N/S Street : Cottage Street
E/W Street: Elm Street
City/State : Milford, NH
Weather : Rain

File Name : 517840A1
Site Code : 51784001
Start Date : 5/13/2006
Page No : 1

Groups Printed- Cars - Trucks

	Elm St From East		Cottage St From South		Elm St From West		
Start Time	Left	Thru	Left	Right	Thru	Right	Int. Total
10:00	3	105	5	1	114	22	250
10:15	7	112	7	4	116	20	266
10:30	9	133	8	3	138	11	302
10:45	3	140	9	4	132	40	328
Total	22	490	29	12	500	93	1146
11:00	4	154	12	3	121	15	309
11:15	3	139	8	2	126	13	291
11:30	3	133	5	2	135	16	294
11:45	5	147	6	1	124	45	328
Total	15	573	31	8	506	89	1222
12:00	3	154	10	2	137	53	359
12:15	2	140	5	5	129	20	301
12:30	3	162	6	0	155	9	335
12:45	0	124	4	1	143	6	278
Total	8	580	25	8	564	88	1273
13:00	8	151	7	2	118	8	294
13:15	0	159	5	4	133	9	310
13:30	8	129	6	2	141	8	294
13:45	8	155	8	3	115	8	297
Total	24	594	26	11	507	33	1195
Grand Total	69	2237	111	39	2077	303	4836
Apprch %	3	97	74	26	87.3	12.7	
Total %	1.4	46.3	2.3	0.8	42.9	6.3	
Cars	68	2215	110	39	2063	302	4797
% Cars	98.6	99	99.1	100	99.3	99.7	99.2
Trucks	1	22	1	0	14	1	39
% Trucks	1.4	1	0.9	0	0.7	0.3	0.8

	Elm St From East			Cottage St From South			Elm St From West			
Start Time	Left	Thru	App. Total	Left	Right	App. Total	Thru	Right	App. Total	Int. Total
Peak Hour Analysis From 10:00 to 13:45 - Peak 1 of 1										
Peak Hour for Entire Intersection Begins at 11:45										
11:45	**5**	147	152	6	1	7	124	45	169	328
12:00	3	154	157	**10**	2	**12**	137	**53**	**190**	**359**
12:15	2	140	142	5	**5**	10	129	20	149	301
12:30	3	**162**	**165**	6	0	6	**155**	9	164	335
Total Volume	13	603	616	27	8	35	545	127	672	1323
% App. Total	2.1	97.9		77.1	22.9		81.1	18.9		
PHF	.650	.931	.933	.675	.400	.729	.879	.599	.884	.921

Peak Hour Analysis From 10:00 to 13:45 - Peak 1 of 1
Peak Hour for Each Approach Begins at:

	13:00			10:15			11:45		
+0 mins.	**8**	151	159	7	**4**	11	124	45	169
+15 mins.	0	**159**	159	8	3	11	137	**53**	**190**
+30 mins.	8	129	137	9	4	13	129	20	149
+45 mins.	8	155	**163**	**12**	3	**15**	**155**	9	164
Total Volume	24	594	618	36	14	50	545	127	672
% App. Total	3.9	96.1		72	28		81.1	18.9	
PHF	.750	.934	.948	.750	.875	.833	.879	.599	.884

Accurate Counts
978-664-2565

N/S Street : Cottage Street
E/W Street: Elm Street
City/State : Milford, NH
Weather : Rain

File Name : 517840A1
Site Code : 51784001
Start Date : 5/13/2006
Page No : 1

Groups Printed- Cars

	Elm St From East		Cottage St From South		Elm St From West		
Start Time	Left	Thru	Left	Right	Thru	Right	Int. Total
10:00	3	105	5	1	114	22	250
10:15	7	112	7	4	116	20	266
10:30	9	133	8	3	138	11	302
10:45	3	140	9	4	132	40	328
Total	22	490	29	12	500	93	1146
11:00	4	154	12	3	121	15	309
11:15	3	139	8	2	126	13	291
11:30	3	133	5	2	135	16	294
11:45	5	147	6	1	124	45	328
Total	15	573	31	8	506	89	1222
12:00	2	150	10	2	133	52	349
12:15	2	136	4	5	127	20	294
12:30	3	158	6	0	153	9	329
12:45	0	120	4	1	141	6	272
Total	7	564	24	8	554	87	1244
13:00	8	149	7	2	117	8	291
13:15	0	157	5	4	132	9	307
13:30	8	128	6	2	140	8	292
13:45	8	154	8	3	114	8	295
Total	24	588	26	11	503	33	1185
Grand Total	68	2215	110	39	2063	302	4797
Apprch %	3	97	73.8	26.2	87.2	12.8	
Total %	1.4	46.2	2.3	0.8	43	6.3	

	Elm St From East			Cottage St From South			Elm St From West			
Start Time	Left	Thru	App. Total	Left	Right	App. Total	Thru	Right	App. Total	Int. Total
Peak Hour Analysis From 10:00 to 13:45 - Peak 1 of 1										
Peak Hour for Entire Intersection Begins at 11:45										
11:45	**5**	147	152	6	1	7	124	45	169	328
12:00	2	150	152	**10**	2	**12**	133	**52**	**185**	**349**
12:15	2	136	138	4	**5**	9	127	20	147	294
12:30	3	**158**	**161**	6	0	6	**153**	9	162	329
Total Volume	12	591	603	26	8	34	537	126	663	1300
% App. Total	2	98		76.5	23.5		81	19		
PHF	.600	.935	.936	.650	.400	.708	.877	.606	.896	.931

Peak Hour Analysis From 10:00 to 13:45 - Peak 1 of 1
Peak Hour for Each Approach Begins at:

	13:00			10:15			11:45		
+0 mins.	**8**	149	157	7	**4**	11	124	45	169
+15 mins.	0	**157**	157	8	3	11	133	**52**	**185**
+30 mins.	8	128	136	9	4	13	127	20	147
+45 mins.	8	154	**162**	**12**	3	**15**	**153**	9	162
Total Volume	24	588	612	36	14	50	537	126	663
% App. Total	3.9	96.1		72	28		81	19	
PHF	.750	.936	.944	.750	.875	.833	.877	.606	.896

Accurate Counts
978-664-2565

N/S Street : Cottage Street
E/W Street: Elm Street
City/State : Milford, NH
Weather : Rain

File Name : 517840A1
Site Code : 51784001
Start Date : 5/13/2006
Page No : 1

Groups Printed- Trucks

	Elm St From East		Cottage St From South		Elm St From West		
Start Time	Left	Thru	Left	Right	Thru	Right	Int. Total
10:00	0	0	0	0	0	0	0
10:15	0	0	0	0	0	0	0
10:30	0	0	0	0	0	0	0
10:45	0	0	0	0	0	0	0
Total	0	0	0	0	0	0	0
11:00	0	0	0	0	0	0	0
11:15	0	0	0	0	0	0	0
11:30	0	0	0	0	0	0	0
11:45	0	0	0	0	0	0	0
Total	0	0	0	0	0	0	0
12:00	1	4	0	0	4	1	10
12:15	0	4	1	0	2	0	7
12:30	0	4	0	0	2	0	6
12:45	0	4	0	0	2	0	6
Total	1	16	1	0	10	1	29
13:00	0	2	0	0	1	0	3
13:15	0	2	0	0	1	0	3
13:30	0	1	0	0	1	0	2
13:45	0	1	0	0	1	0	2
Total	0	6	0	0	4	0	10
Grand Total	1	22	1	0	14	1	39
Apprch %	4.3	95.7	100	0	93.3	6.7	
Total %	2.6	56.4	2.6	0	35.9	2.6	

	Elm St From East			Cottage St From South			Elm St From West			
Start Time	Left	Thru	App. Total	Left	Right	App. Total	Thru	Right	App. Total	Int. Total
Peak Hour Analysis From 10:00 to 13:45 - Peak 1 of 1										
Peak Hour for Entire Intersection Begins at 12:00										
12:00	**1**	**4**	**5**	0	0	0	**4**	**1**	**5**	**10**
12:15	0	4	4	**1**	0	**1**	2	0	2	7
12:30	0	4	4	0	0	0	2	0	2	6
12:45	0	4	4	0	0	0	2	0	2	6
Total Volume	1	16	17	1	0	1	10	1	11	29
% App. Total	5.9	94.1		100	0		90.9	9.1		
PHF	.250	1.000	.850	.250	.000	.250	.625	.250	.550	.725

Peak Hour Analysis From 10:00 to 13:45 - Peak 1 of 1
Peak Hour for Each Approach Begins at:

	12:00			11:30			12:00		
+0 mins.	**1**	**4**	**5**	0	0	0	**4**	**1**	**5**
+15 mins.	0	4	4	0	0	0	2	0	2
+30 mins.	0	4	4	0	0	0	2	0	2
+45 mins.	0	4	4	**1**	0	**1**	2	0	2
Total Volume	1	16	17	1	0	1	10	1	11
% App. Total	5.9	94.1		100	0		90.9	9.1	
PHF	.250	1.000	.850	.250	.000	.250	.625	.250	.550

Accurate Counts
978-664-2565

N/S Street : Cottage Street
E/W Street: Elm Street
City/State : Milford, NH
Weather : Rain

File Name : 517840A1
Site Code : 51784001
Start Date : 5/13/2006
Page No : 1

	Elm St From East			Cottage St From South			Elm St From West			
Start Time	Left	Thru	App Total	Left	Right	App. Total	Thru	Right	App. Total	Int. Total
Peak Hour Analysis From 10:00 to 13:45 - Peak 1 of 1										
Peak Hour for Entire Intersection Begins at 11:45										
11:45	**5**	147	152	6	1	7	124	45	169	328
12:00	3	154	157	**10**	2	**12**	137	**53**	**190**	**359**
12:15	2	140	142	5	**5**	10	129	20	149	301
12:30	3	**162**	**165**	6	0	6	**155**	9	164	335
Total Volume	13	603	616	27	8	35	545	127	672	1323
% App. Total	2.1	97.9		77.1	22.9		81.1	18.9		
PHF	.650	.931	.933	.675	.400	.729	.879	.599	.884	.921

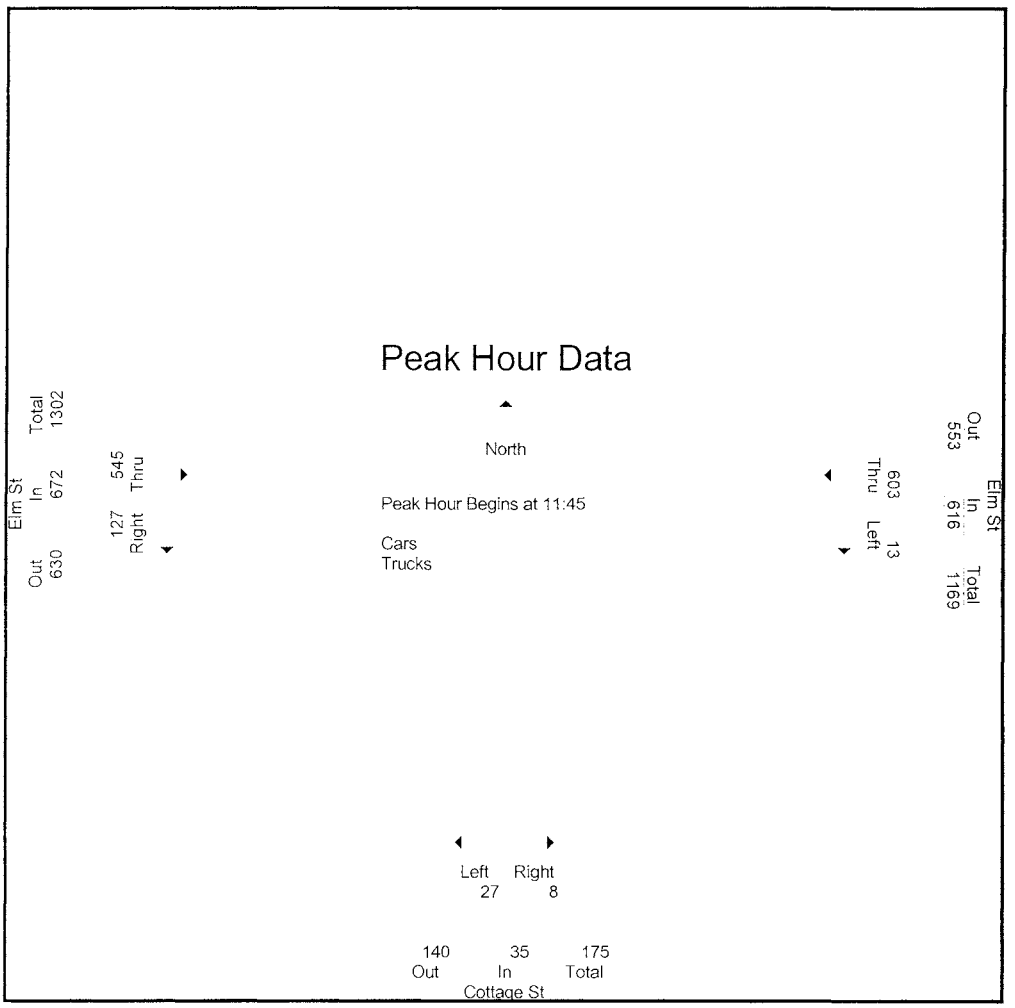

Accurate Counts
978-664-2565

N/S Street : Cottage Street
E/W Street: Elm Street
City/State : Milford, NH
Weather : Rain

File Name : 517840A1
Site Code : 51784001
Start Date : 5/13/2006
Page No : 1

	Elm St From East			Cottage St From South			Elm St From West			
Start Time	Left	Thru	App. Total	Left	Right	App. Total	Thru	Right	App. Total	Int. Total
Peak Hour Analysis From 10:00 to 13:45 - Peak 1 of 1										
Peak Hour for Entire Intersection Begins at 11:45										
11:45	**5**	147	152	6	1	7	124	45	169	328
12:00	2	150	152	**10**	2	**12**	133	**52**	**185**	**349**
12:15	2	136	138	4	**5**	9	127	20	147	294
12:30	3	**158**	**161**	6	0	6	**153**	9	162	329
Total Volume	12	591	603	26	8	34	537	126	663	1300
% App. Total	2	98		76.5	23.5		81	19		
PHF	.600	.935	.936	.650	.400	.708	.877	.606	.896	.931

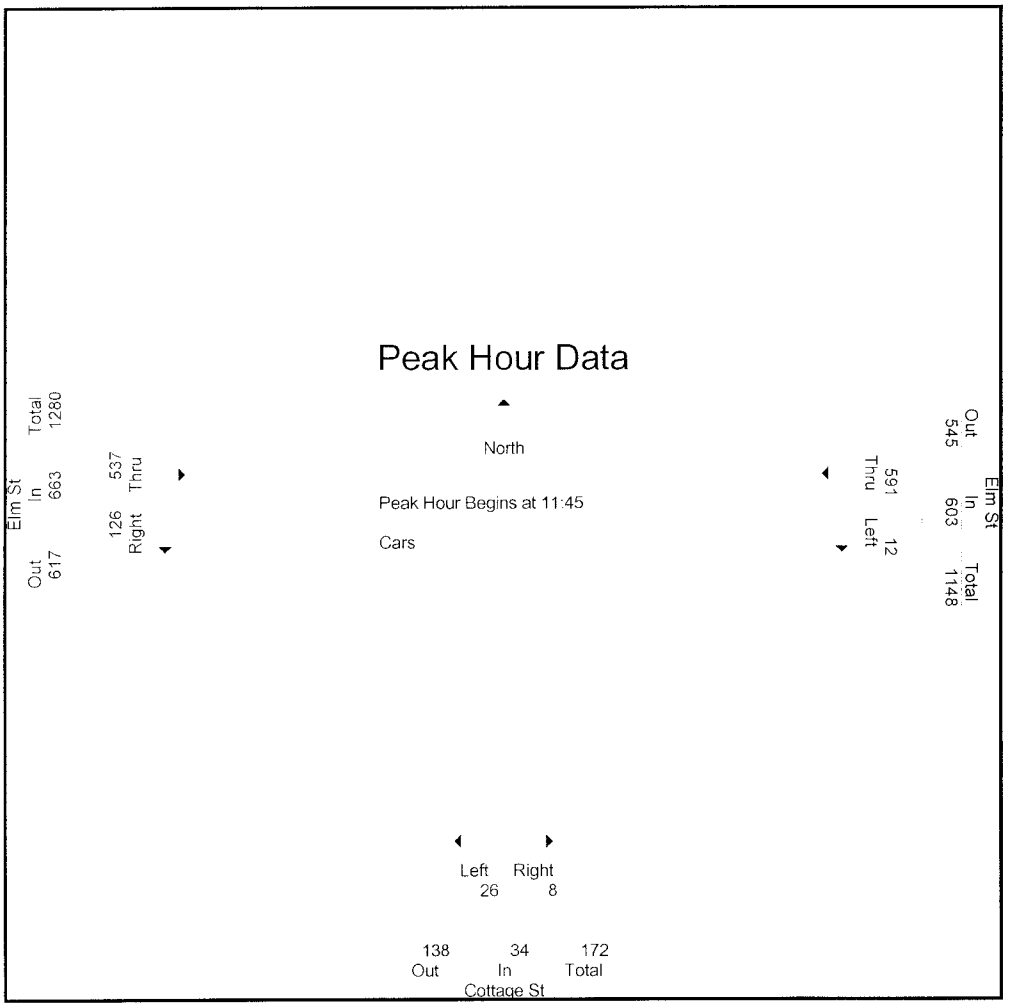

Accurate Counts
978-664-2565

N/S Street : Cottage Street
E/W Street: Elm Street
City/State : Milford, NH
Weather : Rain

File Name : 517840A1
Site Code : 51784001
Start Date : 5/13/2006
Page No : 1

	Elm St From East			Cottage St From South			Elm St From West			
Start Time	Left	Thru	App. Total	Left	Right	App. Total	Thru	Right	App. Total	Int. Total
Peak Hour Analysis From 10:00 to 13:45 - Peak 1 of 1										
Peak Hour for Entire Intersection Begins at 12:00										
12:00	**1**	**4**	**5**	0	0	0	**4**	**1**	**5**	**10**
12:15	0	4	4	**1**	0	**1**	2	0	2	7
12:30	0	4	4	0	0	0	2	0	2	6
12:45	0	4	4	0	0	0	2	0	2	6
Total Volume	1	16	17	1	0	1	10	1	11	29
% App. Total	5.9	94.1		100	0		90.9	9.1		
PHF	.250	1.000	.850	.250	.000	.250	.625	.250	.550	.725

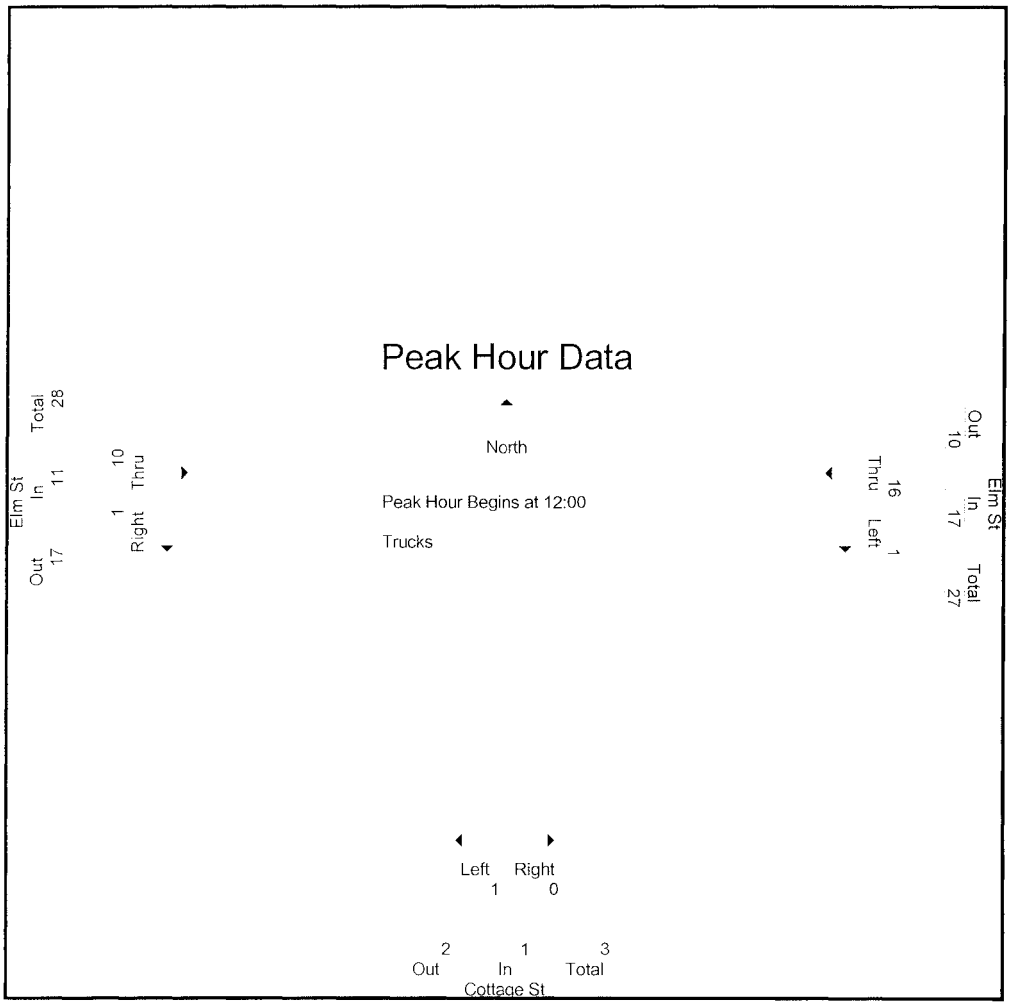

Attachment D-2b

West Street/Elm Street
Intersection

Accurate Counts
978-664-2565

N/S Street : West Street
E/W Street: Elm Street
City/State : Milford, NH
Weather : Rain

File Name : 51784002
Site Code : 51784002
Start Date : 5/2/2006
Page No : 1

Groups Printed- Cars - Trucks

	Elm St From East		West St From South		Elm St From West		
Start Time	Left	Thru	Left	Right	Thru	Right	Int. Total
07:00	27	62	16	47	69	34	255
07:15	46	73	44	56	91	44	354
07:30	39	88	46	75	89	20	357
07:45	10	104	29	38	111	8	300
Total	122	327	135	216	360	106	1266
08:00	13	97	21	27	117	14	289
08:15	17	87	21	37	106	10	278
08:30	24	109	12	29	86	12	272
08:45	18	92	19	23	99	17	268
Total	72	385	73	116	408	53	1107
Grand Total	194	712	208	332	768	159	2373
Apprch %	21.4	78.6	38.5	61.5	82.8	17.2	
Total %	8.2	30	8.8	14	32.4	6.7	
Cars	183	669	197	324	722	152	2247
% Cars	94.3	94	94.7	97.6	94	95.6	94.7
Trucks	11	43	11	8	46	7	126
% Trucks	5.7	6	5.3	2.4	6	4.4	5.3

	Elm St From East			West St From South			Elm St From West			
Start Time	Left	Thru	App. Total	Left	Right	App. Total	Thru	Right	App. Total	Int. Total
Peak Hour Analysis From 07:00 to 08:45 - Peak 1 of 1										
Peak Hour for Entire Intersection Begins at 07:15										
07:15	**46**	73	119	44	56	100	91	**44**	**135**	354
07:30	39	88	**127**	**46**	**75**	**121**	89	20	109	**357**
07:45	10	**104**	114	29	38	67	111	8	119	300
08:00	13	97	110	21	27	48	**117**	14	131	289
Total Volume	108	362	470	140	196	336	408	86	494	1300
% App. Total	23	77		41.7	58.3		82.6	17.4		
PHF	.587	.870	.925	.761	.653	.694	.872	.489	.915	.910

Peak Hour Analysis From 07:00 to 08:45 - Peak 1 of 1
Peak Hour for Each Approach Begins at:

	07:15			07:00			07:15		
+0 mins.	**46**	73	119	16	47	63	91	**44**	**135**
+15 mins.	39	88	**127**	44	56	100	89	20	109
+30 mins.	10	**104**	114	**46**	**75**	**121**	111	8	119
+45 mins.	13	97	110	29	38	67	**117**	14	131
Total Volume	108	362	470	135	216	351	408	86	494
% App. Total	23	77		38.5	61.5		82.6	17.4	
PHF	.587	.870	.925	.734	.720	.725	.872	.489	.915

Accurate Counts
978-664-2565

N/S Street : West Street
E/W Street: Elm Street
City/State : Milford, NH
Weather : Rain

File Name : 51784002
Site Code : 51784002
Start Date : 5/2/2006
Page No : 1

Groups Printed- Cars

	Elm St From East		West St From South		Elm St From West		
Start Time	Left	Thru	Left	Right	Thru	Right	Int. Total
07:00	25	56	15	47	65	34	242
07:15	41	67	42	56	87	42	335
07:30	39	83	44	72	84	20	342
07:45	8	95	29	38	102	6	278
Total	113	301	130	213	338	102	1197
08:00	11	95	19	27	108	12	272
08:15	17	81	19	32	101	10	260
08:30	24	104	11	29	79	12	259
08:45	18	88	18	23	96	16	259
Total	70	368	67	111	384	50	1050
Grand Total	183	669	197	324	722	152	2247
Apprch %	21.5	78.5	37.8	62.2	82.6	17.4	
Total %	8.1	29.8	8.8	14.4	32.1	6.8	

	Elm St From East			West St From South			Elm St From West			
Start Time	Left	Thru	App. Total	Left	Right	App. Total	Thru	Right	App. Total	Int. Total
Peak Hour Analysis From 07:00 to 08:45 - Peak 1 of 1										
Peak Hour for Entire Intersection Begins at 07:15										
07:15	**41**	67	108	42	56	98	87	**42**	**129**	335
07:30	39	83	**122**	**44**	**72**	**116**	84	20	104	**342**
07:45	8	**95**	103	29	38	67	102	6	108	278
08:00	11	95	106	19	27	46	**108**	12	120	272
Total Volume	99	340	439	134	193	327	381	80	461	1227
% App. Total	22.6	77.4		41	59		82.6	17.4		
PHF	.604	.895	.900	.761	.670	.705	.882	.476	.893	.897

Peak Hour Analysis From 07:00 to 08:45 - Peak 1 of 1
Peak Hour for Each Approach Begins at:

	07:15			07:00			07:15		
+0 mins.	**41**	67	108	15	47	62	87	**42**	**129**
+15 mins.	39	83	**122**	42	56	98	84	20	104
+30 mins.	8	**95**	103	**44**	**72**	**116**	102	6	108
+45 mins.	11	95	106	29	38	67	**108**	12	120
Total Volume	99	340	439	130	213	343	381	80	461
% App. Total	22.6	77.4		37.9	62.1		82.6	17.4	
PHF	.604	.895	.900	.739	.740	.739	.882	.476	.893

Accurate Counts
978-664-2565

N/S Street : West Street
E/W Street: Elm Street
City/State : Milford, NH
Weather : Rain

File Name : 51784002
Site Code : 51784002
Start Date : 5/2/2006
Page No : 1

Groups Printed- Trucks

	Elm St From East		West St From South		Elm St From West		
Start Time	Left	Thru	Left	Right	Thru	Right	Int. Total
07:00	2	6	1	0	4	0	13
07:15	5	6	2	0	4	2	19
07:30	0	5	2	3	5	0	15
07:45	2	9	0	0	9	2	22
Total	9	26	5	3	22	4	69
08:00	2	2	2	0	9	2	17
08:15	0	6	2	5	5	0	18
08:30	0	5	1	0	7	0	13
08:45	0	4	1	0	3	1	9
Total	2	17	6	5	24	3	57
Grand Total	11	43	11	8	46	7	126
Apprch %	20.4	79.6	57.9	42.1	86.8	13.2	
Total %	8.7	34.1	8.7	6.3	36.5	5.6	

	Elm St From East			West St From South			Elm St From West			
Start Time	Left	Thru	App. Total	Left	Right	App. Total	Thru	Right	App. Total	Int. Total
Peak Hour Analysis From 07:00 to 08:45 - Peak 1 of 1										
Peak Hour for Entire Intersection Begins at 07:15										
07:15	**5**	6	**11**	**2**	0	2	4	**2**	6	19
07:30	0	5	5	2	**3**	**5**	5	0	5	15
07:45	2	**9**	11	0	0	0	**9**	2	**11**	**22**
08:00	2	2	4	2	0	2	9	2	11	17
Total Volume	9	22	31	6	3	9	27	6	33	73
% App. Total	29	71		66.7	33.3		81.8	18.2		
PHF	.450	.611	.705	.750	.250	.450	.750	.750	.750	.830

Peak Hour Analysis From 07:00 to 08:45 - Peak 1 of 1
Peak Hour for Each Approach Begins at:

	07:00			07:30			07:45		
+0 mins.	2	6	8	**2**	3	5	**9**	**2**	**11**
+15 mins.	**5**	6	**11**	0	0	0	9	2	11
+30 mins.	0	5	5	2	0	2	5	0	5
+45 mins.	2	**9**	11	2	**5**	**7**	7	0	7
Total Volume	9	26	35	6	8	14	30	4	34
% App. Total	25.7	74.3		42.9	57.1		88.2	11.8	
PHF	.450	.722	.795	.750	.400	.500	.833	.500	.773

Accurate Counts
978-664-2565

N/S Street : West Street
E/W Street: Elm Street
City/State : Milford, NH
Weather : Rain

File Name : 51784002
Site Code : 51784002
Start Date : 5/2/2006
Page No : 1

	Elm St From East			West St From South			Elm St From West			
Start Time	Left	Thru	App. Total	Left	Right	App. Total	Thru	Right	App. Total	Int. Total
Peak Hour Analysis From 07:00 to 08:45 - Peak 1 of 1										
Peak Hour for Entire Intersection Begins at 07:15										
07:15	**46**	73	119	44	56	100	91	**44**	**135**	354
07:30	39	88	**127**	**46**	**75**	**121**	89	20	109	**357**
07:45	10	**104**	114	29	38	67	111	8	119	300
08:00	13	97	110	21	27	48	**117**	14	131	289
Total Volume	108	362	470	140	196	336	408	86	494	1300
% App. Total	23	77		41.7	58.3		82.6	17.4		
PHF	.587	.870	.925	.761	.653	.694	.872	.489	.915	.910

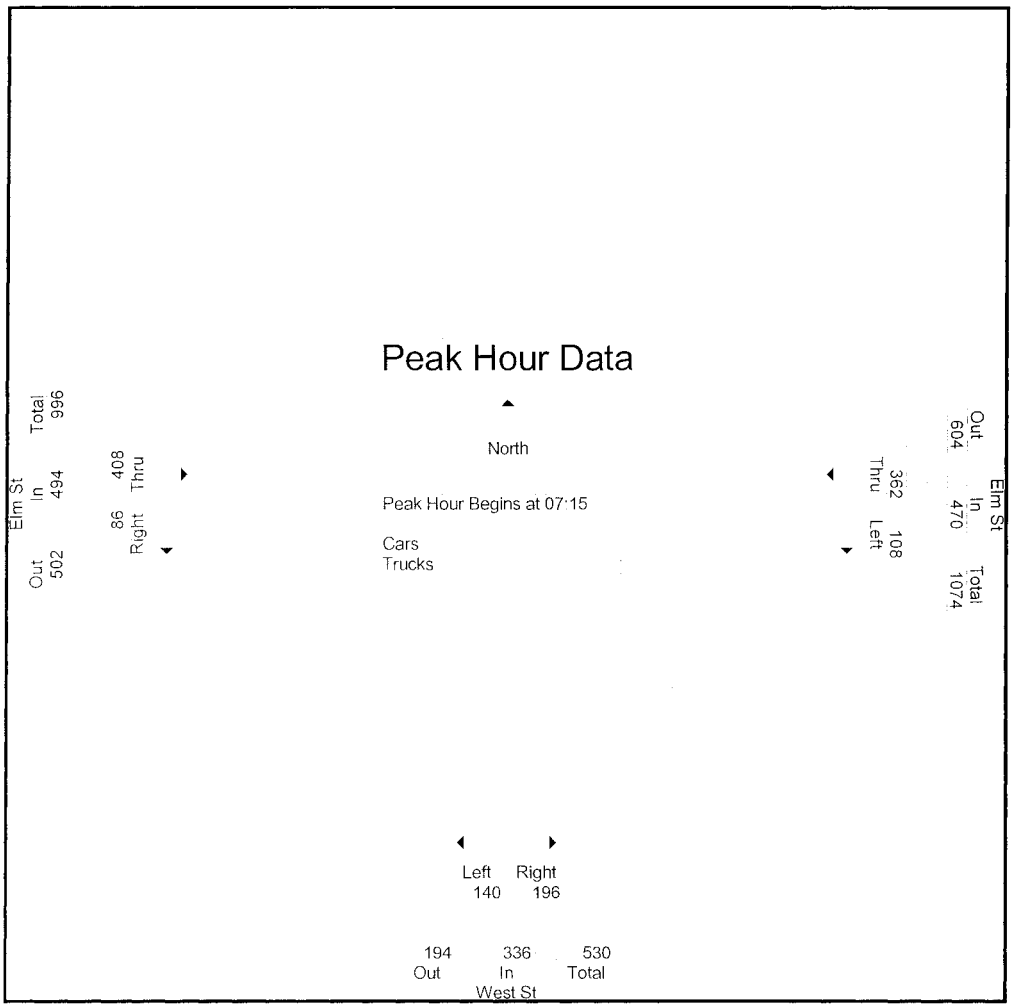

Accurate Counts
978-664-2565

N/S Street : West Street
E/W Street: Elm Street
City/State : Milford, NH
Weather : Rain

File Name : 51784002
Site Code : 51784002
Start Date : 5/2/2006
Page No : 1

	Elm St From East			West St From South			Elm St From West			
Start Time	Left	Thru	App. Total	Left	Right	App. Total	Thru	Right	App. Total	Int. Total
Peak Hour Analysis From 07:00 to 08:45 - Peak 1 of 1										
Peak Hour for Entire Intersection Begins at 07:15										
07:15	**41**	67	108	42	56	98	87	**42**	**129**	335
07:30	39	83	**122**	**44**	**72**	**116**	84	20	104	**342**
07:45	8	**95**	103	29	38	67	102	6	108	278
08:00	11	95	106	19	27	46	**108**	12	120	272
Total Volume	99	340	439	134	193	327	381	80	461	1227
% App. Total	22.6	77.4		41	59		82.6	17.4		
PHF	.604	.895	.900	.761	.670	.705	.882	.476	.893	.897

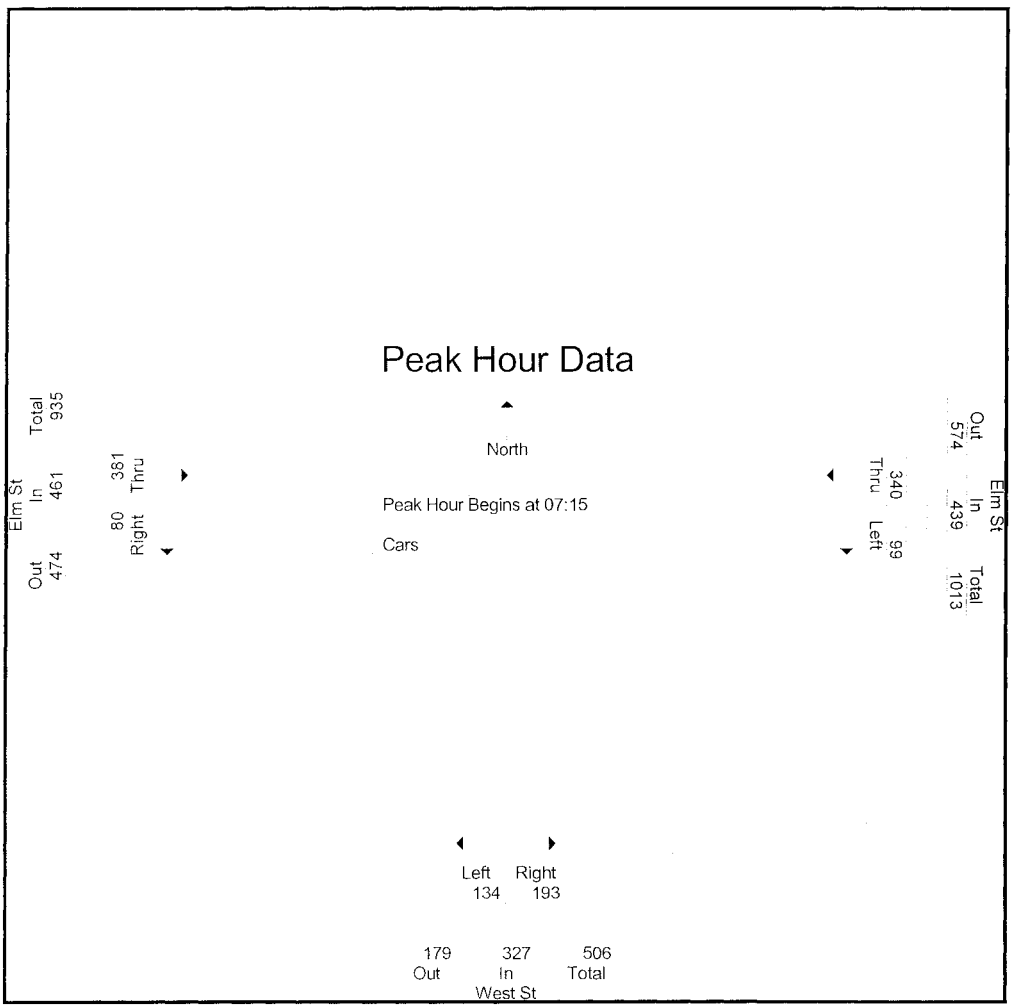

Accurate Counts
978-664-2565

N/S Street : West Street
E/W Street: Elm Street
City/State : Milford, NH
Weather : Rain

File Name : 51784002
Site Code : 51784002
Start Date : 5/2/2006
Page No : 1

	Elm St From East			West St From South			Elm St From West			
Start Time	Left	Thru	App. Total	Left	Right	App. Total	Thru	Right	App. Total	Int. Total
Peak Hour Analysis From 07:00 to 08:45 - Peak 1 of 1										
Peak Hour for Entire Intersection Begins at 07:15										
07:15	**5**	6	**11**	**2**	0	2	4	**2**	6	19
07:30	0	5	5	2	**3**	**5**	5	0	5	15
07:45	2	**9**	11	0	0	0	**9**	2	**11**	**22**
08:00	2	2	4	2	0	2	9	2	11	17
Total Volume	9	22	31	6	3	9	27	6	33	73
% App. Total	29	71		66.7	33.3		81.8	18.2		
PHF	.450	.611	.705	.750	.250	.450	.750	.750	.750	.830

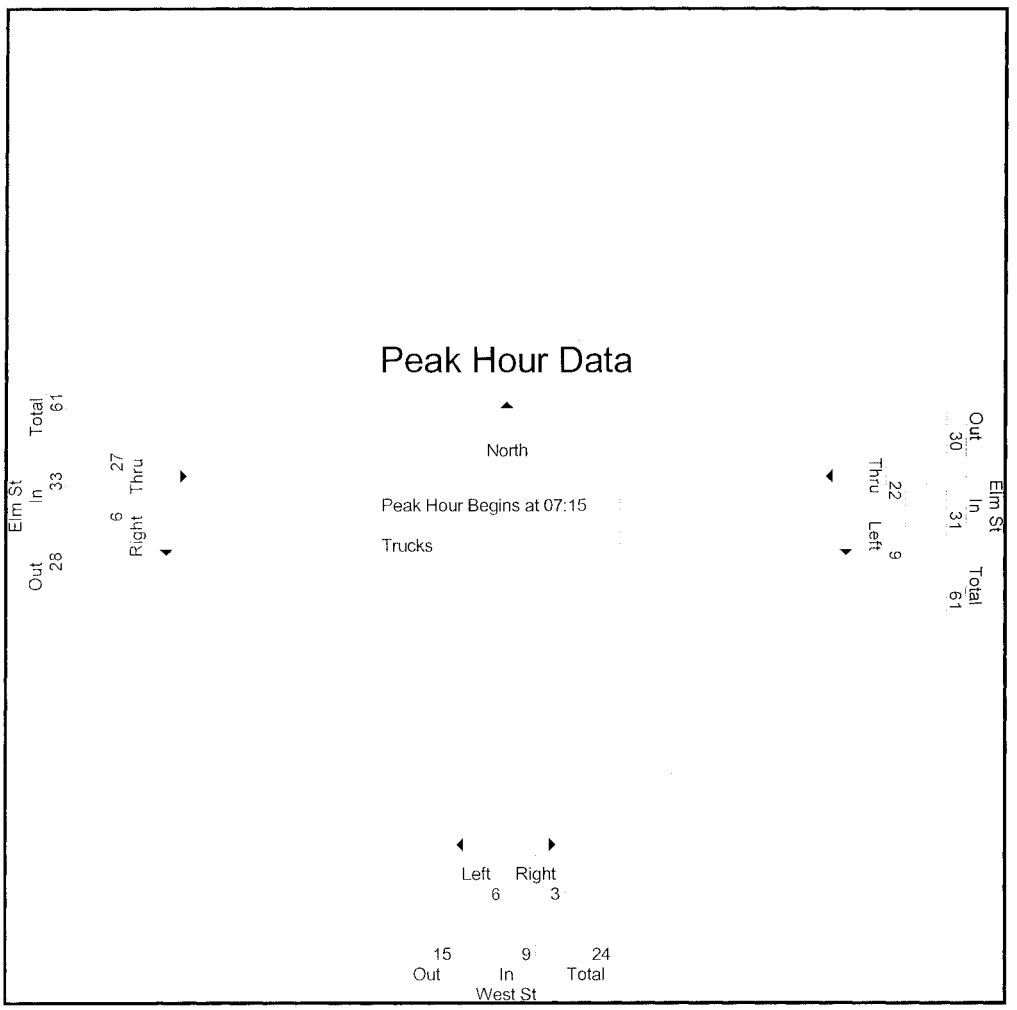

Accurate Counts
978-664-2565

N/S Street : West Street
E/W Street: Elm Street
City/State : Milford, NH
Weather : Rain

File Name : 51784002
Site Code : 51784002
Start Date : 5/2/2006
Page No : 1

Groups Printed- Cars - Trucks

	Elm St From East		West St From South		Elm St From West		
Start Time	Left	Thru	Left	Right	Thru	Right	Int. Total
16:00	42	109	24	26	116	21	338
16:15	31	133	22	38	91	19	334
16:30	42	129	31	18	116	24	360
16:45	42	101	28	30	100	21	322
Total	157	472	105	112	423	85	1354
17:00	34	155	30	35	126	18	398
17:15	50	132	26	30	121	27	386
17:30	41	113	19	28	111	18	330
17:45	42	115	18	25	98	17	315
Total	167	515	93	118	456	80	1429
Grand Total	324	987	198	230	879	165	2783
Apprch %	24.7	75.3	46.3	53.7	84.2	15.8	
Total %	11.6	35.5	7.1	8.3	31.6	5.9	
Cars	323	968	195	229	865	160	2740
% Cars	99.7	98.1	98.5	99.6	98.4	97	98.5
Trucks	1	19	3	1	14	5	43
% Trucks	0.3	1.9	1.5	0.4	1.6	3	1.5

	Elm St From East			West St From South			Elm St From West			
Start Time	Left	Thru	App. Total	Left	Right	App. Total	Thru	Right	App. Total	Int. Total
Peak Hour Analysis From 16:00 to 17:45 - Peak 1 of 1										
Peak Hour for Entire Intersection Begins at 16:30										
16:30	42	129	171	**31**	18	49	116	24	140	360
16:45	42	101	143	28	30	58	100	21	121	322
17:00	34	**155**	**189**	30	**35**	**65**	**126**	18	144	**398**
17:15	**50**	132	182	26	30	56	121	**27**	**148**	386
Total Volume	168	517	685	115	113	228	463	90	553	1466
% App. Total	24.5	75.5		50.4	49.6		83.7	16.3		
PHF	.840	.834	.906	.927	.807	.877	.919	.833	.934	.921

Peak Hour Analysis From 16:00 to 17:45 - Peak 1 of 1
Peak Hour for Each Approach Begins at:

	16:30			16:15			16:30		
+0 mins.	42	129	171	22	**38**	60	116	24	140
+15 mins.	42	101	143	**31**	18	49	100	21	121
+30 mins.	34	**155**	**189**	28	30	58	**126**	18	144
+45 mins.	**50**	132	182	30	35	**65**	121	**27**	**148**
Total Volume	168	517	685	111	121	232	463	90	553
% App. Total	24.5	75.5		47.8	52.2		83.7	16.3	
PHF	.840	.834	.906	.895	.796	.892	.919	.833	.934

Accurate Counts
978-664-2565

N/S Street : West Street
E/W Street: Elm Street
City/State : Milford, NH
Weather : Rain

File Name : 51784002
Site Code : 51784002
Start Date : 5/2/2006
Page No : 1

Groups Printed- Cars

	Elm St From East		West St From South		Elm St From West		
Start Time	Left	Thru	Left	Right	Thru	Right	Int. Total
16:00	42	108	24	26	110	20	330
16:15	31	130	21	37	90	19	328
16:30	42	126	31	18	115	24	356
16:45	42	96	28	30	100	20	316
Total	157	460	104	111	415	83	1330
17:00	33	154	29	35	125	17	393
17:15	50	130	25	30	118	27	380
17:30	41	112	19	28	109	17	326
17:45	42	112	18	25	98	16	311
Total	166	508	91	118	450	77	1410
Grand Total	323	968	195	229	865	160	2740
Apprch %	25	75	46	54	84.4	15.6	
Total %	11.8	35.3	7.1	8.4	31.6	5.8	

	Elm St From East			West St From South			Elm St From West			
Start Time	Left	Thru	App. Total	Left	Right	App. Total	Thru	Right	App. Total	Int. Total
Peak Hour Analysis From 16:00 to 17:45 - Peak 1 of 1										
Peak Hour for Entire Intersection Begins at 16:30										
16:30	42	126	168	**31**	18	49	115	24	139	356
16:45	42	96	138	28	30	58	100	20	120	316
17:00	33	**154**	**187**	29	**35**	**64**	**125**	17	142	**393**
17:15	**50**	130	180	25	30	55	118	**27**	**145**	380
Total Volume	167	506	673	113	113	226	458	88	546	1445
% App. Total	24.8	75.2		50	50		83.9	16.1		
PHF	.835	.821	.900	.911	.807	.883	.916	.815	.941	.919

Peak Hour Analysis From 16:00 to 17:45 - Peak 1 of 1
Peak Hour for Each Approach Begins at:

	17:00			16:15			16:30		
+0 mins.	33	**154**	**187**	21	**37**	58	115	24	139
+15 mins.	**50**	130	180	**31**	18	49	100	20	120
+30 mins.	41	112	153	28	30	58	**125**	17	142
+45 mins.	42	112	154	29	35	**64**	118	**27**	**145**
Total Volume	166	508	674	109	120	229	458	88	546
% App. Total	24.6	75.4		47.6	52.4		83.9	16.1	
PHF	.830	.825	.901	.879	.811	.895	.916	.815	.941

Accurate Counts
978-664-2565

N/S Street : West Street
E/W Street: Elm Street
City/State : Milford, NH
Weather : Rain

File Name : 51784002
Site Code : 51784002
Start Date : 5/2/2006
Page No : 1

Groups Printed- Trucks

	Elm St From East		West St From South		Elm St From West		
Start Time	Left	Thru	Left	Right	Thru	Right	Int. Total
16:00	0	1	0	0	6	1	8
16:15	0	3	1	1	1	0	6
16:30	0	3	0	0	1	0	4
16:45	0	5	0	0	0	1	6
Total	0	12	1	1	8	2	24
17:00	1	1	1	0	1	1	5
17:15	0	2	1	0	3	0	6
17:30	0	1	0	0	2	1	4
17:45	0	3	0	0	0	1	4
Total	1	7	2	0	6	3	19
Grand Total	1	19	3	1	14	5	43
Apprch %	5	95	75	25	73.7	26.3	
Total %	2.3	44.2	7	2.3	32.6	11.6	

	Elm St From East			West St From South			Elm St From West			
Start Time	Left	Thru	App. Total	Left	Right	App. Total	Thru	Right	App. Total	Int. Total
Peak Hour Analysis From 16:00 to 17:45 - Peak 1 of 1										
Peak Hour for Entire Intersection Begins at 16:00										
16:00	0	1	1	0	0	0	**6**	**1**	**7**	**8**
16:15	0	3	3	**1**	**1**	**2**	1	0	1	6
16:30	0	3	3	0	0	0	1	0	1	4
16:45	0	**5**	**5**	0	0	0	0	1	1	6
Total Volume	0	12	12	1	1	2	8	2	10	24
% App. Total	0	100		50	50		80	20		
PHF	.000	.600	.600	.250	.250	.250	.333	.500	.357	.750

Peak Hour Analysis From 16:00 to 17:45 - Peak 1 of 1
Peak Hour for Each Approach Begins at:

	16:15			16:15			16:00		
+0 mins.	0	3	3	**1**	**1**	**2**	**6**	**1**	**7**
+15 mins.	0	3	3	0	0	0	1	0	1
+30 mins.	0	**5**	**5**	0	0	0	1	0	1
+45 mins.	**1**	1	2	1	0	1	0	1	1
Total Volume	1	12	13	2	1	3	8	2	10
% App. Total	7.7	92.3		66.7	33.3		80	20	
PHF	.250	.600	650	.500	.250	.375	.333	.500	.357

Accurate Counts
978-664-2565

N/S Street : West Street
E/W Street: Elm Street
City/State : Milford, NH
Weather : Rain

File Name : 51784002
Site Code : 51784002
Start Date : 5/2/2006
Page No : 1

	Elm St From East			West St From South			Elm St From West			
Start Time	Left	Thru	App. Total	Left	Right	App. Total	Thru	Right	App. Total	Int. Total
Peak Hour Analysis From 16:00 to 17:45 - Peak 1 of 1										
Peak Hour for Entire Intersection Begins at 16:30										
16:30	42	129	171	**31**	18	49	116	24	140	360
16:45	42	101	143	28	30	58	100	21	121	322
17:00	34	**155**	**189**	30	**35**	**65**	**126**	18	144	**398**
17:15	**50**	132	182	26	30	56	121	**27**	**148**	386
Total Volume	168	517	685	115	113	228	463	90	553	1466
% App. Total	24.5	75.5		50.4	49.6		83.7	16.3		
PHF	.840	.834	.906	.927	.807	.877	.919	.833	.934	.921

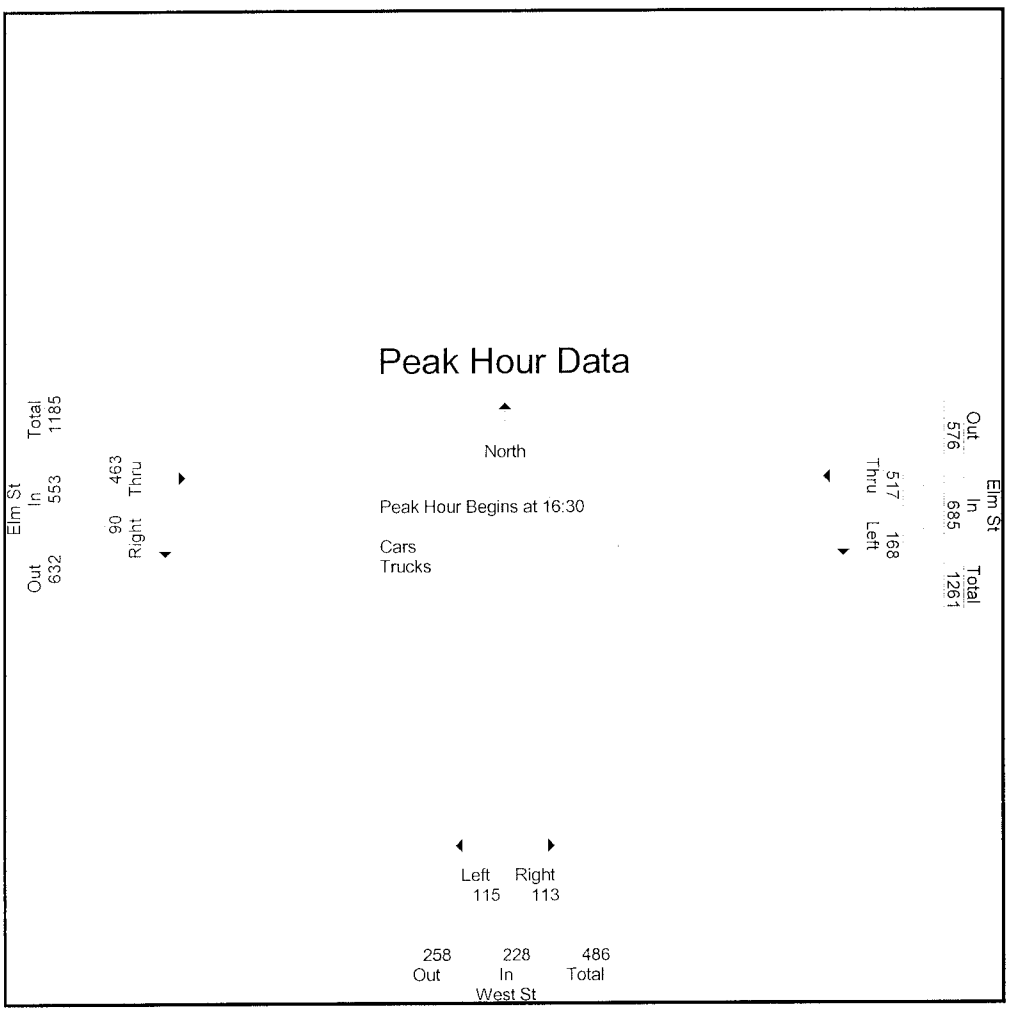

Accurate Counts
978-664-2565

N/S Street : West Street
E/W Street: Elm Street
City/State : Milford, NH
Weather : Rain

File Name : 51784002
Site Code : 51784002
Start Date : 5/2/2006
Page No : 1

	Elm St From East			West St From South			Elm St From West			
Start Time	Left	Thru	App. Total	Left	Right	App. Total	Thru	Right	App. Total	Int. Total
Peak Hour Analysis From 16:00 to 17:45 - Peak 1 of 1										
Peak Hour for Entire Intersection Begins at 16:30										
16:30	42	126	168	**31**	18	49	115	24	139	356
16:45	42	96	138	28	30	58	100	20	120	316
17:00	33	**154**	**187**	29	**35**	**64**	**125**	17	142	**393**
17:15	**50**	130	180	25	30	55	118	**27**	**145**	380
Total Volume	167	506	673	113	113	226	458	88	546	1445
% App. Total	24.8	75.2		50	50		83.9	16.1		
PHF	.835	.821	.900	.911	.807	.883	.916	.815	.941	.919

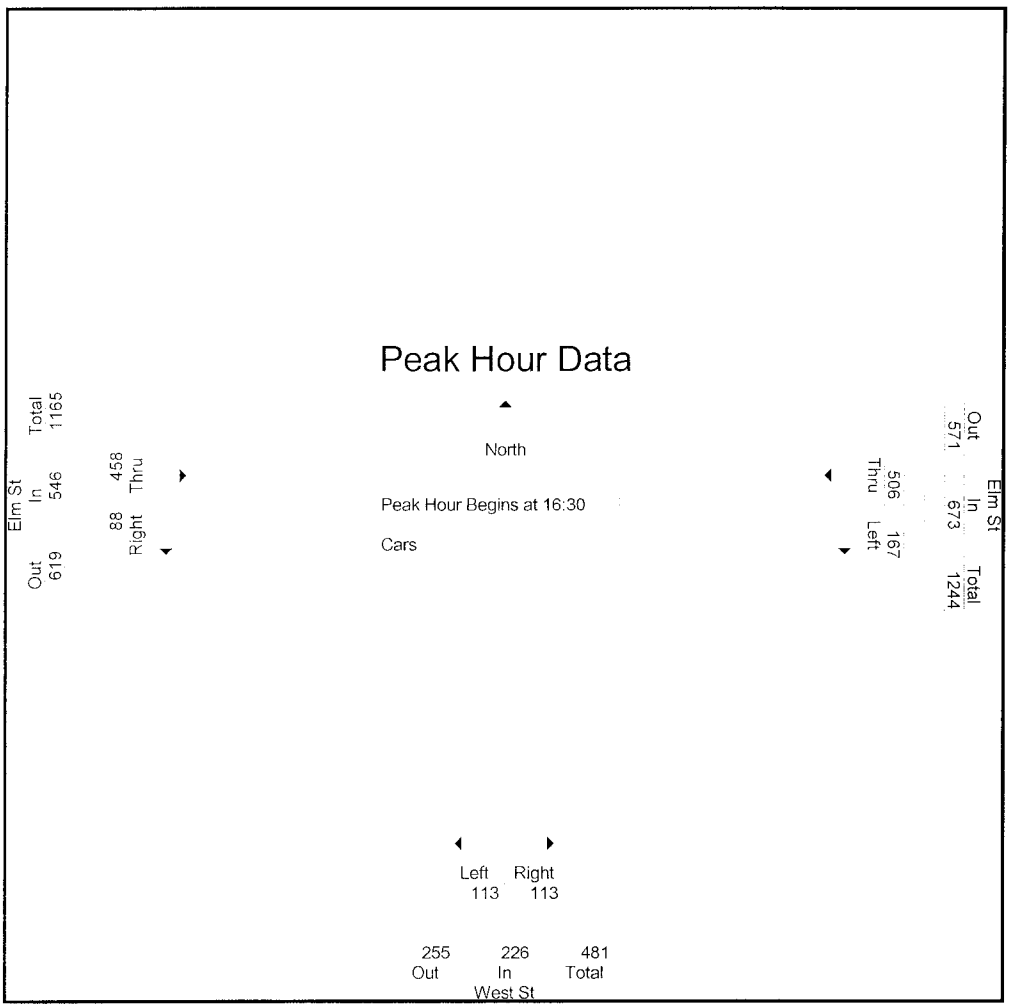

Accurate Counts
978-664-2565

N/S Street : West Street
E/W Street: Elm Street
City/State : Milford, NH
Weather : Rain

File Name : 51784002
Site Code : 51784002
Start Date : 5/2/2006
Page No : 1

	Elm St From East			West St From South			Elm St From West			
Start Time	Left	Thru	App. Total	Left	Right	App. Total	Thru	Right	App. Total	Int. Total
Peak Hour Analysis From 16:00 to 17:45 - Peak 1 of 1										
Peak Hour for Entire Intersection Begins at 16:00										
16:00	0	1	1	0	0	0	**6**	**1**	**7**	**8**
16:15	0	3	3	**1**	**1**	**2**	1	0	1	6
16:30	0	3	3	0	0	0	1	0	1	4
16:45	0	**5**	**5**	0	0	0	0	1	1	6
Total Volume	0	12	12	1	1	2	8	2	10	24
% App. Total	0	100		50	50		80	20		
PHF	.000	.600	.600	.250	.250	.250	.333	.500	.357	.750

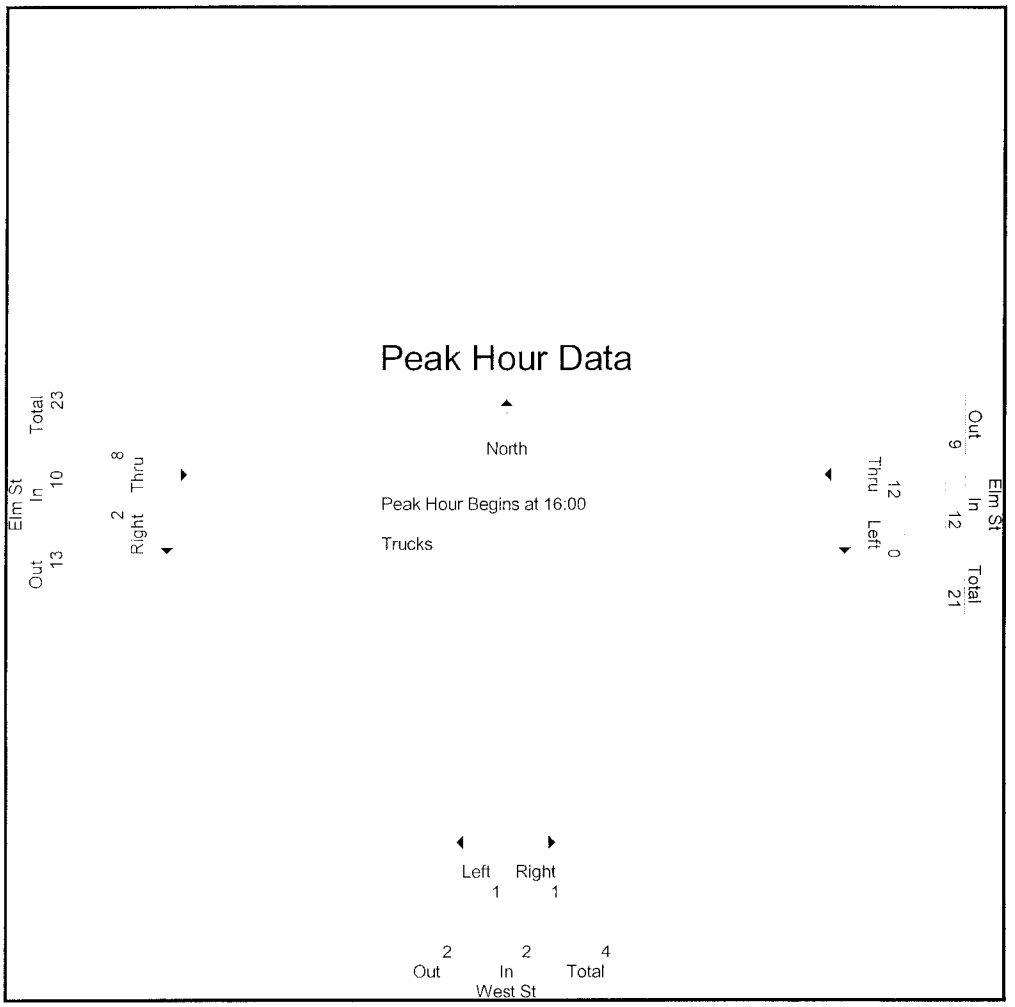

Accurate Counts
978-664-2565

N/S Street : West Street
E/W Street: Elm Street
City/State : Milford, NH
Weather : Rain

File Name : 517840A2
Site Code : 51784002
Start Date : 5/13/2006
Page No : 1

Groups Printed- Cars - Trucks

	Elm St From East		West St From South		Elm St From West		
Start Time	Left	Thru	Left	Right	Thru	Right	Int. Total
10:00	17	101	23	22	106	15	284
10:15	19	103	23	19	122	18	304
10:30	26	124	25	16	132	27	350
10:45	24	133	25	30	140	17	369
Total	86	461	96	87	500	77	1307
11:00	30	119	25	28	114	21	337
11:15	22	137	22	25	120	25	351
11:30	16	115	26	30	136	27	350
11:45	23	131	28	28	132	17	359
Total	91	502	101	111	502	90	1397
12:00	25	119	25	37	138	22	366
12:15	24	136	28	21	120	28	357
12:30	32	121	22	32	125	22	354
12:45	18	115	20	30	123	24	330
Total	99	491	95	120	506	96	1407
13:00	29	143	20	21	108	13	334
13:15	19	127	29	13	130	19	337
13:30	29	110	18	26	109	20	312
13:45	27	136	26	23	98	19	329
Total	104	516	93	83	445	71	1312
Grand Total	380	1970	385	401	1953	334	5423
Apprch %	16.2	83.8	49	51	85.4	14.6	
Total %	7	36.3	7.1	7.4	36	6.2	
Cars	376	1956	378	400	1939	331	5380
% Cars	98.9	99.3	98.2	99.8	99.3	99.1	99.2
Trucks	4	14	7	1	14	3	43
% Trucks	1.1	0.7	1.8	0.2	0.7	0.9	0.8

	Elm St From East			West St From South			Elm St From West			
Start Time	Left	Thru	App. Total	Left	Right	App. Total	Thru	Right	App. Total	Int. Total
Peak Hour Analysis From 10:00 to 13:45 - Peak 1 of 1										
Peak Hour for Entire Intersection Begins at 11:45										
11:45	23	131	154	**28**	28	56	132	17	149	359
12:00	25	119	144	25	**37**	**62**	**138**	22	**160**	**366**
12:15	24	**136**	**160**	28	21	49	120	**28**	148	357
12:30	**32**	121	153	22	32	54	125	22	147	354
Total Volume	104	507	611	103	118	221	515	89	604	1436
% App. Total	17	83		46.6	53.4		85.3	14.7		
PHF	.813	.932	.955	.920	.797	.891	.933	.795	.944	.981

Peak Hour Analysis From 10:00 to 13:45 - Peak 1 of 1
Peak Hour for Each Approach Begins at:

	13:00			11:30			11:30		
+0 mins.	**29**	**143**	**172**	26	30	56	136	27	**163**
+15 mins.	19	127	146	**28**	28	56	132	17	149
+30 mins.	29	110	139	25	**37**	**62**	**138**	22	160
+45 mins.	27	136	163	28	21	49	120	**28**	148
Total Volume	104	516	620	107	116	223	526	94	620
% App. Total	16.8	83.2		48	52		84.8	15.2	
PHF	.897	.902	.901	.955	.784	.899	.953	.839	.951

Accurate Counts
978-664-2565

N/S Street : West Street
E/W Street: Elm Street
City/State : Milford, NH
Weather : Rain

File Name : 517840A2
Site Code : 51784002
Start Date : 5/13/2006
Page No : 1

Groups Printed- Cars

	Elm St From East		West St From South		Elm St From West		
Start Time	Left	Thru	Left	Right	Thru	Right	Int. Total
10:00	17	101	22	22	106	15	283
10:15	18	103	22	19	121	18	301
10:30	26	124	24	16	131	27	348
10:45	24	132	25	30	139	16	366
Total	85	460	93	87	497	76	1298
11:00	30	119	24	28	113	21	335
11:15	22	134	22	25	120	25	348
11:30	16	115	25	30	132	26	344
11:45	22	131	28	28	132	17	358
Total	90	499	99	111	497	89	1385
12:00	25	119	25	37	138	22	366
12:15	23	133	28	21	119	28	352
12:30	32	118	22	31	123	22	348
12:45	18	114	19	30	123	24	328
Total	98	484	94	119	503	96	1394
13:00	28	141	20	21	107	13	330
13:15	19	126	29	13	130	18	335
13:30	29	110	18	26	108	20	311
13:45	27	136	25	23	97	19	327
Total	103	513	92	83	442	70	1303
Grand Total	376	1956	378	400	1939	331	5380
Apprch %	16.1	83.9	48.6	51.4	85.4	14.6	
Total %	7	36.4	7	7.4	36	6.2	

	Elm St From East			West St From South			Elm St From West			
Start Time	Left	Thru	App. Total	Left	Right	App. Total	Thru	Right	App. Total	Int. Total
Peak Hour Analysis From 10:00 to 13:45 - Peak 1 of 1										
Peak Hour for Entire Intersection Begins at 11:45										
11:45	22	131	153	**28**	28	56	132	17	149	358
12:00	25	119	144	25	**37**	**62**	**138**	22	**160**	**366**
12:15	23	**133**	**156**	28	21	49	119	**28**	147	352
12:30	**32**	118	150	22	31	53	123	22	145	348
Total Volume	102	501	603	103	117	220	512	89	601	1424
% App. Total	16.9	83.1		46.8	53.2		85.2	14.8		
PHF	.797	.942	.966	.920	.791	.887	.928	.795	.939	.973

Peak Hour Analysis From 10:00 to 13:45 - Peak 1 of 1									
Peak Hour for Each Approach Begins at:									
	13:00			11:30			11:30		
+0 mins.	28	**141**	**169**	25	30	55	132	26	158
+15 mins.	19	126	145	**28**	28	56	132	17	149
+30 mins.	**29**	110	139	25	**37**	**62**	**138**	22	**160**
+45 mins.	27	136	163	28	21	49	119	**28**	147
Total Volume	103	513	616	106	116	222	521	93	614
% App. Total	16.7	83.3		47.7	52.3		84.9	15.1	
PHF	.888	.910	.911	.946	.784	.895	.944	.830	.959

Accurate Counts
978-664-2565

N/S Street : West Street
E/W Street: Elm Street
City/State : Milford, NH
Weather : Rain

File Name : 517840A2
Site Code : 51784002
Start Date : 5/13/2006
Page No : 1

Groups Printed- Trucks

	Elm St From East		West St From South		Elm St From West		
Start Time	Left	Thru	Left	Right	Thru	Right	Int. Total
10:00	0	0	1	0	0	0	1
10:15	1	0	1	0	1	0	3
10:30	0	0	1	0	1	0	2
10:45	0	1	0	0	1	1	3
Total	1	1	3	0	3	1	9
11:00	0	0	1	0	1	0	2
11:15	0	3	0	0	0	0	3
11:30	0	0	1	0	4	1	6
11:45	1	0	0	0	0	0	1
Total	1	3	2	0	5	1	12
12:00	0	0	0	0	0	0	0
12:15	1	3	0	0	1	0	5
12:30	0	3	0	1	2	0	6
12:45	0	1	1	0	0	0	2
Total	1	7	1	1	3	0	13
13:00	1	2	0	0	1	0	4
13:15	0	1	0	0	0	1	2
13:30	0	0	0	0	1	0	1
13:45	0	0	1	0	1	0	2
Total	1	3	1	0	3	1	9
Grand Total	4	14	7	1	14	3	43
Apprch %	22.2	77.8	87.5	12.5	82.4	17.6	
Total %	9.3	32.6	16.3	2.3	32.6	7	

	Elm St From East			West St From South			Elm St From West			
Start Time	Left	Thru	App. Total	Left	Right	App. Total	Thru	Right	App. Total	Int. Total
Peak Hour Analysis From 10:00 to 13:45 - Peak 1 of 1										
Peak Hour for Entire Intersection Begins at 12:15										
12:15	**1**	**3**	**4**	0	0	0	1	0	1	5
12:30	0	3	3	0	**1**	**1**	**2**	0	**2**	**6**
12:45	0	1	1	**1**	0	1	0	0	0	2
13:00	1	2	3	0	0	0	1	0	1	4
Total Volume	2	9	11	1	1	2	4	0	4	17
% App. Total	18.2	81.8		50	50		100	0		
PHF	.500	.750	.688	.250	.250	.500	.500	.000	.500	.708

Peak Hour Analysis From 10:00 to 13:45 - Peak 1 of 1
Peak Hour for Each Approach Begins at:

	12:15			10:00			10:45		
+0 mins.	**1**	**3**	**4**	**1**	0	**1**	1	**1**	2
+15 mins.	0	3	3	1	0	1	1	0	1
+30 mins.	0	1	1	1	0	1	0	0	0
+45 mins.	1	2	3	0	0	0	**4**	1	**5**
Total Volume	2	9	11	3	0	3	6	2	8
% App. Total	18.2	81.8		100	0		75	25	
PHF	.500	.750	.688	.750	.000	.750	.375	.500	.400

Accurate Counts
978-664-2565

N/S Street : West Street
E/W Street: Elm Street
City/State : Milford, NH
Weather : Rain

File Name : 517840A2
Site Code : 51784002
Start Date : 5/13/2006
Page No : 1

	Elm St From East			West St From South			Elm St From West			
Start Time	Left	Thru	App. Total	Left	Right	App. Total	Thru	Right	App. Total	Int. Total
Peak Hour Analysis From 10:00 to 13:45 - Peak 1 of 1										
Peak Hour for Entire Intersection Begins at 11:45										
11:45	23	131	154	**28**	28	56	132	17	149	359
12:00	25	119	144	25	**37**	**62**	**138**	22	**160**	**366**
12:15	24	**136**	**160**	28	21	49	120	**28**	148	357
12:30	**32**	121	153	22	32	54	125	22	147	354
Total Volume	104	507	611	103	118	221	515	89	604	1436
% App. Total	17	83		46.6	53.4		85.3	14.7		
PHF	.813	.932	.955	.920	.797	.891	.933	.795	.944	.981

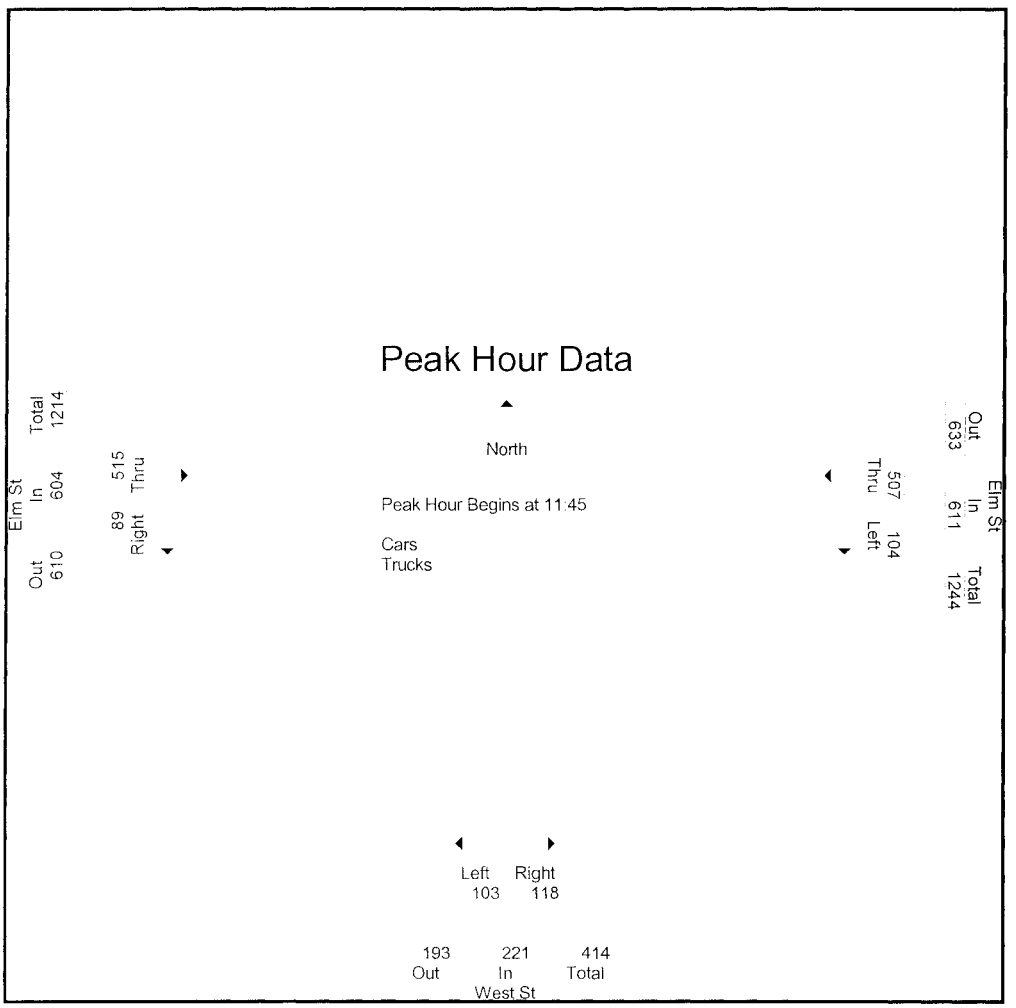

Accurate Counts
978-664-2565

N/S Street : West Street
E/W Street: Elm Street
City/State : Milford, NH
Weather : Rain

File Name : 517840A2
Site Code : 51784002
Start Date : 5/13/2006
Page No : 1

	Elm St From East			West St From South			Elm St From West			
Start Time	Left	Thru	App. Total	Left	Right	App. Total	Thru	Right	App. Total	Int. Total
Peak Hour Analysis From 10:00 to 13:45 - Peak 1 of 1										
Peak Hour for Entire Intersection Begins at 11:45										
11:45	22	131	153	**28**	28	56	132	17	149	358
12:00	25	119	144	25	**37**	**62**	**138**	22	**160**	**366**
12:15	23	**133**	**156**	28	21	49	119	**28**	147	352
12:30	**32**	118	150	22	31	53	123	22	145	348
Total Volume	102	501	603	103	117	220	512	89	601	1424
% App. Total	16.9	83.1		46.8	53.2		85.2	14.8		
PHF	.797	.942	.966	.920	.791	.887	.928	.795	.939	.973

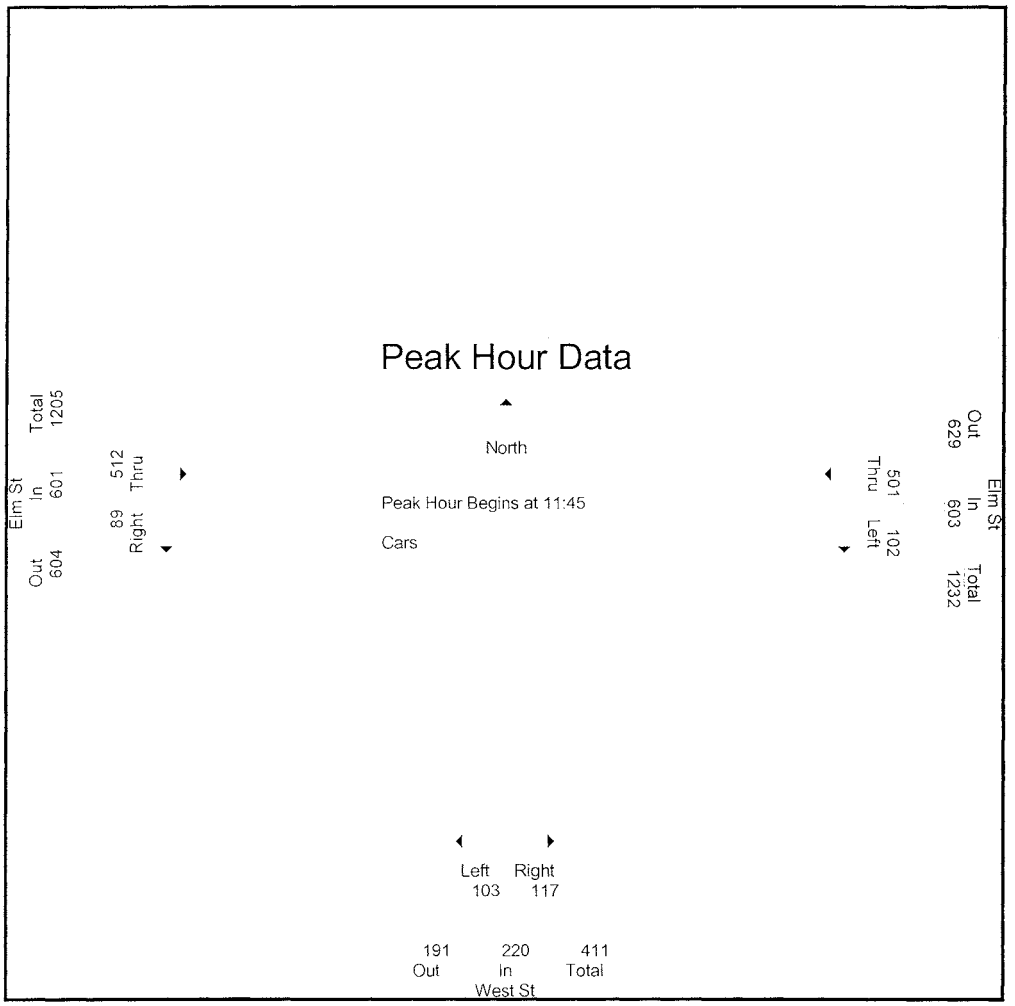

Accurate Counts
978-664-2565

N/S Street : West Street
E/W Street: Elm Street
City/State : Milford, NH
Weather : Rain

File Name : 517840A2
Site Code : 51784002
Start Date : 5/13/2006
Page No : 1

	Elm St From East			West St From South			Elm St From West			
Start Time	Left	Thru	App. Total	Left	Right	App. Total	Thru	Right	App. Total	Int. Total
Peak Hour Analysis From 10:00 to 13:45 - Peak 1 of 1										
Peak Hour for Entire Intersection Begins at 12:15										
12:15	**1**	**3**	**4**	0	0	0	1	0	1	5
12:30	0	3	3	0	**1**	**1**	**2**	0	**2**	**6**
12:45	0	1	1	**1**	0	1	0	0	0	2
13:00	1	2	3	0	0	0	1	0	1	4
Total Volume	2	9	11	1	1	2	4	0	4	17
% App. Total	18.2	81.8		50	50		100	0		
PHF	.500	.750	.688	.250	.250	.500	.500	.000	.500	.708

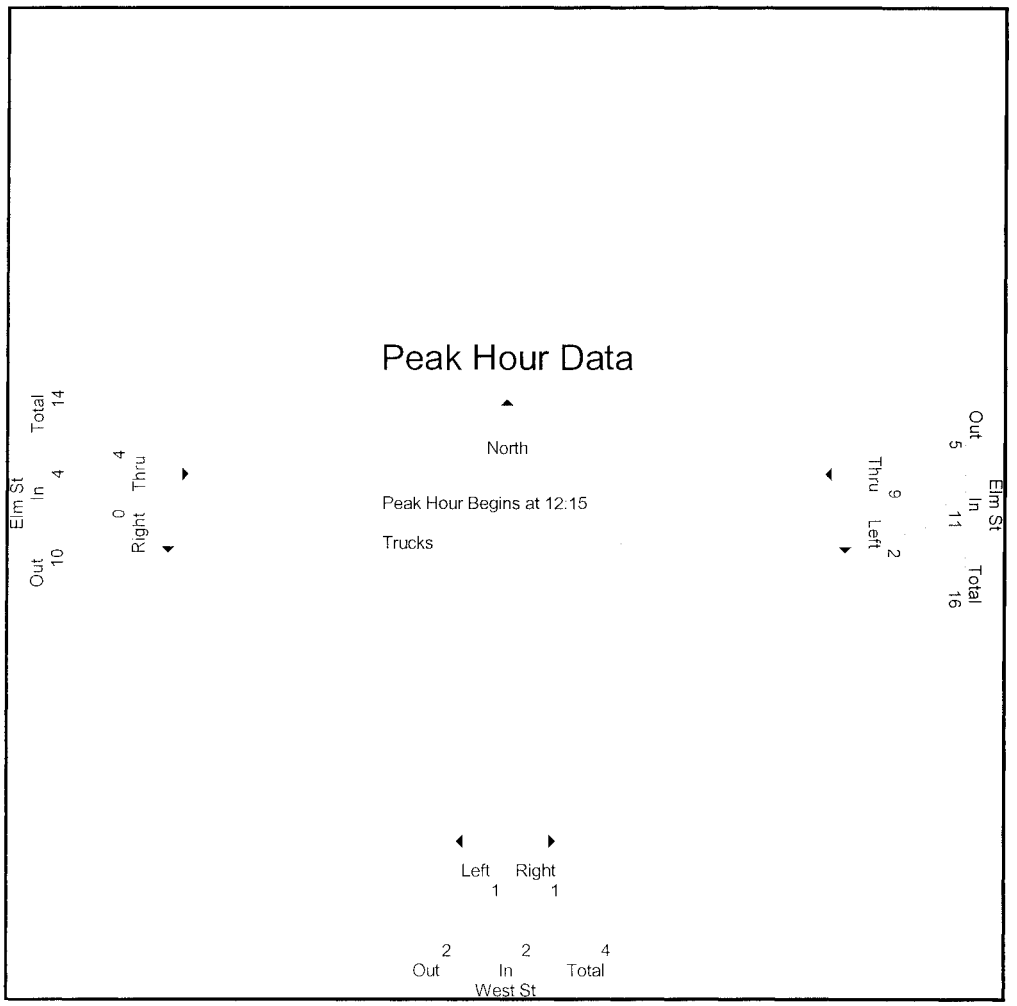

Attachment D-2c

Old Wilton Road/Elm Street Intersection

Accurate Counts
978-664-2565

N/S Street : Old Wilton Road
E/W Street: Elm Street
City/State : Milford, NH
Weather : Rain

File Name : 51784003
Site Code : 51784003
Start Date : 5/2/2006
Page No : 1

Groups Printed- Cars - Trucks

	Elm St From East		Old Wilton Rd From South		Elm St From West		
Start Time	Left	Thru	Left	Right	Thru	Right	Int. Total
07:00	17	40	0	16	75	0	148
07:15	11	41	0	20	100	0	172
07:30	24	60	1	17	53	0	155
07:45	31	68	0	16	80	4	199
Total	83	209	1	69	308	4	674
08:00	20	40	0	23	110	2	195
08:15	17	50	1	21	70	0	159
08:30	21	43	1	14	53	1	133
08:45	15	58	0	36	70	0	179
Total	73	191	2	94	303	3	666
Grand Total	156	400	3	163	611	7	1340
Apprch %	28.1	71.9	1.8	98.2	98.9	1.1	
Total %	11.6	29.9	0.2	12.2	45.6	0.5	
Cars	151	359	3	156	577	6	1252
% Cars	96.8	89.8	100	95.7	94.4	85.7	93.4
Trucks	5	41	0	7	34	1	88
% Trucks	3.2	10.2	0	4.3	5.6	14.3	6.6

	Elm St From East			Old Wilton Rd From South			Elm St From West			
Start Time	Left	Thru	App. Total	Left	Right	App. Total	Thru	Right	App. Total	Int. Total
Peak Hour Analysis From 07:00 to 08:45 - Peak 1 of 1										
Peak Hour for Entire Intersection Begins at 07:15										
07:15	11	41	52	0	20	20	100	0	100	172
07:30	24	60	84	**1**	17	18	53	0	53	155
07:45	**31**	**68**	**99**	0	16	16	80	**4**	84	**199**
08:00	20	40	60	0	**23**	**23**	**110**	2	**112**	195
Total Volume	86	209	295	1	76	77	343	6	349	721
% App. Total	29.2	70.8		1.3	98.7		98.3	1.7		
PHF	.694	.768	.745	.250	.826	.837	.780	.375	.779	.906

Peak Hour Analysis From 07:00 to 08:45 - Peak 1 of 1
Peak Hour for Each Approach Begins at:

	07:30			08:00			07:15		
+0 mins.	24	60	84	0	23	23	100	0	100
+15 mins.	**31**	**68**	**99**	**1**	21	22	53	0	53
+30 mins.	20	40	60	1	14	15	80	**4**	84
+45 mins.	17	50	67	0	**36**	**36**	**110**	2	**112**
Total Volume	92	218	310	2	94	96	343	6	349
% App. Total	29.7	70.3		2.1	97.9		98.3	1.7	
PHF	.742	.801	.783	.500	.653	.667	.780	.375	.779

Accurate Counts
978-664-2565

N/S Street : Old Wilton Road
E/W Street: Elm Street
City/State : Milford, NH
Weather : Rain

File Name : 51784003
Site Code : 51784003
Start Date : 5/2/2006
Page No : 1

Groups Printed- Cars

	Elm St From East		Old Wilton Rd From South		Elm St From West		
Start Time	Left	Thru	Left	Right	Thru	Right	Int. Total
07:00	17	36	0	15	75	0	143
07:15	10	37	0	20	95	0	162
07:30	23	54	1	17	45	0	140
07:45	31	59	0	14	79	4	187
Total	81	186	1	66	294	4	632
08:00	20	36	0	23	105	1	185
08:15	17	46	1	21	64	0	149
08:30	20	38	1	13	50	1	123
08:45	13	53	0	33	64	0	163
Total	70	173	2	90	283	2	620
Grand Total	151	359	3	156	577	6	1252
Apprch %	29.6	70.4	1.9	98.1	99	1	
Total %	12.1	28.7	0.2	12.5	46.1	0.5	

	Elm St From East			Old Wilton Rd From South			Elm St From West			
Start Time	Left	Thru	App. Total	Left	Right	App. Total	Thru	Right	App. Total	Int. Total
Peak Hour Analysis From 07:00 to 08:45 - Peak 1 of 1										
Peak Hour for Entire Intersection Begins at 07:15										
07:15	10	37	47	0	20	20	95	0	95	162
07:30	23	54	77	**1**	17	18	45	0	45	140
07:45	**31**	**59**	**90**	0	14	14	79	**4**	83	**187**
08:00	20	36	56	0	**23**	**23**	**105**	1	**106**	185
Total Volume	84	186	270	1	74	75	324	5	329	674
% App. Total	31.1	68.9		1.3	98.7		98.5	1.5		
PHF	.677	.788	.750	.250	.804	.815	.771	.313	.776	.901

Peak Hour Analysis From 07:00 to 08:45 - Peak 1 of 1
Peak Hour for Each Approach Begins at:

	07:30			08:00			07:15		
+0 mins.	23	54	77	0	23	23	95	0	95
+15 mins.	**31**	**59**	**90**	**1**	21	22	45	0	45
+30 mins.	20	36	56	1	13	14	79	**4**	83
+45 mins.	17	46	63	0	**33**	**33**	**105**	1	**106**
Total Volume	91	195	286	2	90	92	324	5	329
% App. Total	31.8	68.2		2.2	97.8		98.5	1.5	
PHF	.734	.826	.794	.500	.682	.697	.771	.313	.776

Accurate Counts
978-664-2565

N/S Street : Old Wilton Road
E/W Street: Elm Street
City/State : Milford, NH
Weather : Rain

File Name : 51784003
Site Code : 51784003
Start Date : 5/2/2006
Page No : 1

Groups Printed- Trucks

	Elm St From East		Old Wilton Rd From South		Elm St From West		
Start Time	Left	Thru	Left	Right	Thru	Right	Int. Total
07:00	0	4	0	1	0	0	5
07:15	1	4	0	0	5	0	10
07:30	1	6	0	0	8	0	15
07:45	0	9	0	2	1	0	12
Total	2	23	0	3	14	0	42
08:00	0	4	0	0	5	1	10
08:15	0	4	0	0	6	0	10
08:30	1	5	0	1	3	0	10
08:45	2	5	0	3	6	0	16
Total	3	18	0	4	20	1	46
Grand Total	5	41	0	7	34	1	88
Apprch %	10.9	89.1	0	100	97.1	2.9	
Total %	5.7	46.6	0	8	38.6	1.1	

	Elm St From East			Old Wilton Rd From South			Elm St From West			
Start Time	Left	Thru	App. Total	Left	Right	App. Total	Thru	Right	App. Total	Int. Total
Peak Hour Analysis From 07:00 to 08:45 - Peak 1 of 1										
Peak Hour for Entire Intersection Begins at 07:15										
07:15	**1**	4	5	0	0	0	5	0	5	10
07:30	1	6	7	0	0	0	**8**	0	**8**	**15**
07:45	0	**9**	**9**	0	**2**	**2**	1	0	1	12
08:00	0	4	4	0	0	0	5	**1**	6	10
Total Volume	2	23	25	0	2	2	19	1	20	47
% App. Total	8	92		0	100		95	5		
PHF	.500	.639	.694	.000	.250	.250	.594	.250	.625	.783

Peak Hour Analysis From 07:00 to 08:45 - Peak 1 of 1
Peak Hour for Each Approach Begins at:

	07:00			08:00			07:30		
+0 mins.	0	4	4	0	0	0	**8**	0	**8**
+15 mins.	**1**	4	5	0	0	0	1	0	1
+30 mins.	1	6	7	0	1	1	5	**1**	6
+45 mins.	0	**9**	**9**	0	**3**	**3**	6	0	6
Total Volume	2	23	25	0	4	4	20	1	21
% App. Total	8	92		0	100		95.2	4.8	
PHF	.500	.639	.694	.000	.333	.333	.625	.250	.656

Accurate Counts
978-664-2565

N/S Street : Old Wilton Road
E/W Street: Elm Street
City/State : Milford, NH
Weather : Rain

File Name : 51784003
Site Code : 51784003
Start Date : 5/2/2006
Page No : 1

	Elm St From East			Old Wilton Rd From South			Elm St From West			
Start Time	Left	Thru	App Total	Left	Right	App. Total	Thru	Right	App. Total	Int. Total
Peak Hour Analysis From 07:00 to 08:45 - Peak 1 of 1										
Peak Hour for Entire Intersection Begins at 07:15										
07:15	11	41	52	0	20	20	100	0	100	172
07:30	24	60	84	**1**	17	18	53	0	53	155
07:45	**31**	**68**	**99**	0	16	16	80	**4**	84	**199**
08:00	20	40	60	0	**23**	**23**	**110**	2	**112**	195
Total Volume	86	209	295	1	76	77	343	6	349	721
% App. Total	29.2	70.8		1.3	98.7		98.3	1.7		
PHF	.694	.768	.745	.250	.826	.837	.780	.375	.779	.906

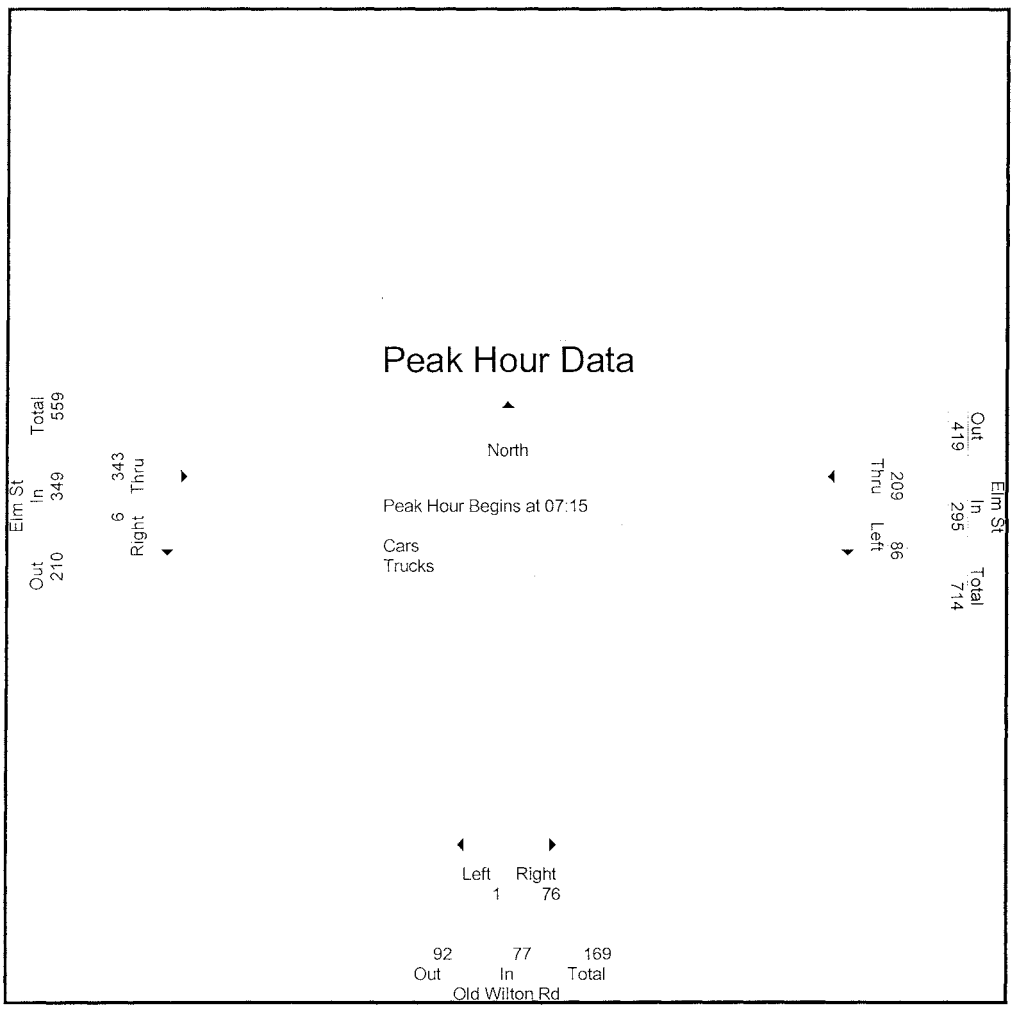

Accurate Counts
978-664-2565

N/S Street : Old Wilton Road
E/W Street: Elm Street
City/State : Milford, NH
Weather : Rain

File Name : 51784003
Site Code : 51784003
Start Date : 5/2/2006
Page No : 1

	Elm St From East			Old Wilton Rd From South			Elm St From West			
Start Time	Left	Thru	App. Total	Left	Right	App. Total	Thru	Right	App. Total	Int. Total
Peak Hour Analysis From 07:00 to 08:45 - Peak 1 of 1										
Peak Hour for Entire Intersection Begins at 07:15										
07:15	10	37	47	0	20	20	95	0	95	162
07:30	23	54	77	**1**	17	18	45	0	45	140
07:45	**31**	**59**	**90**	0	14	14	79	**4**	83	**187**
08:00	20	36	56	0	**23**	**23**	**105**	1	**106**	185
Total Volume	84	186	270	1	74	75	324	5	329	674
% App. Total	31.1	68.9		1.3	98.7		98.5	1.5		
PHF	.677	.788	.750	.250	.804	.815	.771	.313	.776	.901

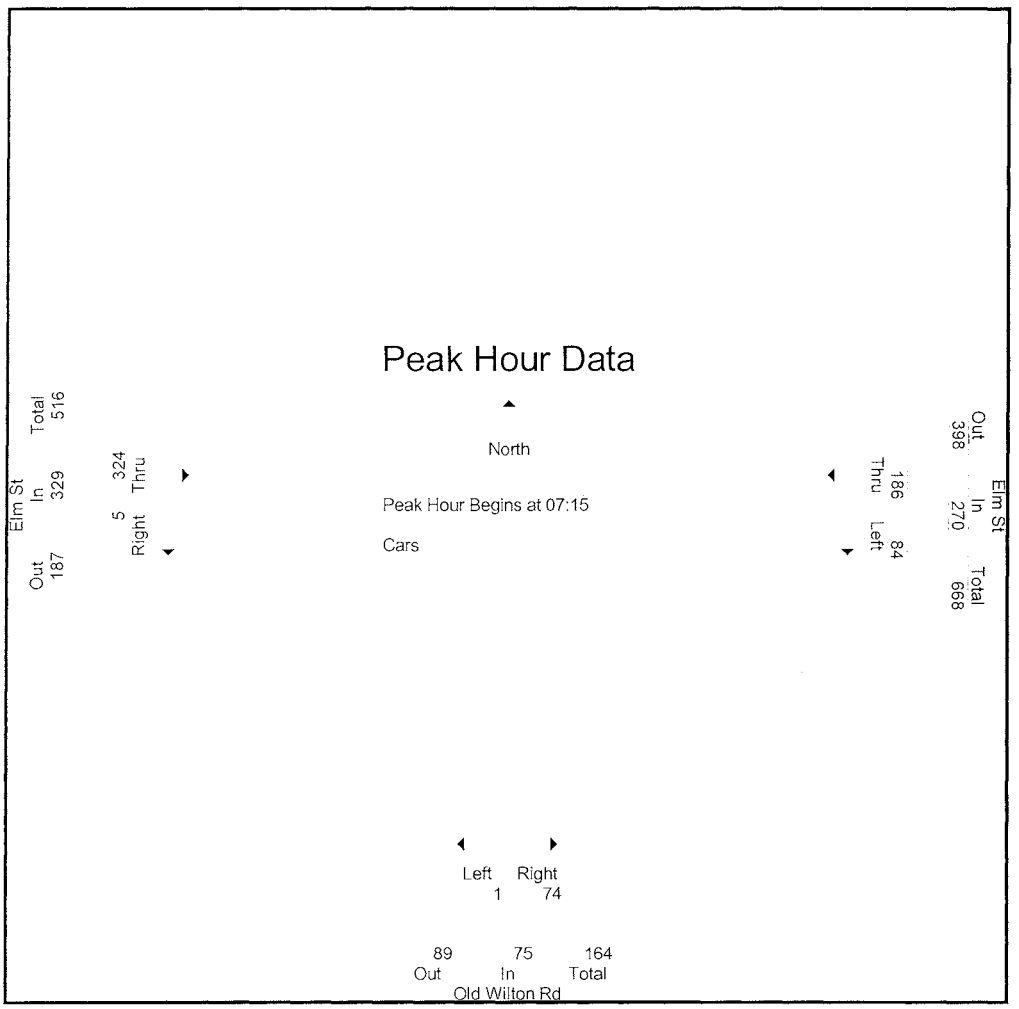

Accurate Counts
978-664-2565

N/S Street : Old Wilton Road
E/W Street: Elm Street
City/State : Milford, NH
Weather : Rain

File Name : 51784003
Site Code : 51784003
Start Date : 5/2/2006
Page No : 1

	Elm St From East			Old Wilton Rd From South			Elm St From West			
Start Time	Left	Thru	App Total	Left	Right	App. Total	Thru	Right	App. Total	Int. Total
Peak Hour Analysis From 07:00 to 08:45 - Peak 1 of 1										
Peak Hour for Entire Intersection Begins at 07:15										
07:15	**1**	4	5	0	0	0	5	0	5	10
07:30	1	6	7	0	0	0	**8**	0	**8**	**15**
07:45	0	**9**	**9**	0	**2**	**2**	1	0	1	12
08:00	0	4	4	0	0	0	5	**1**	6	10
Total Volume	2	23	25	0	2	2	19	1	20	47
% App. Total	8	92		0	100		95	5		
PHF	.500	.639	694	.000	.250	.250	.594	.250	.625	.783

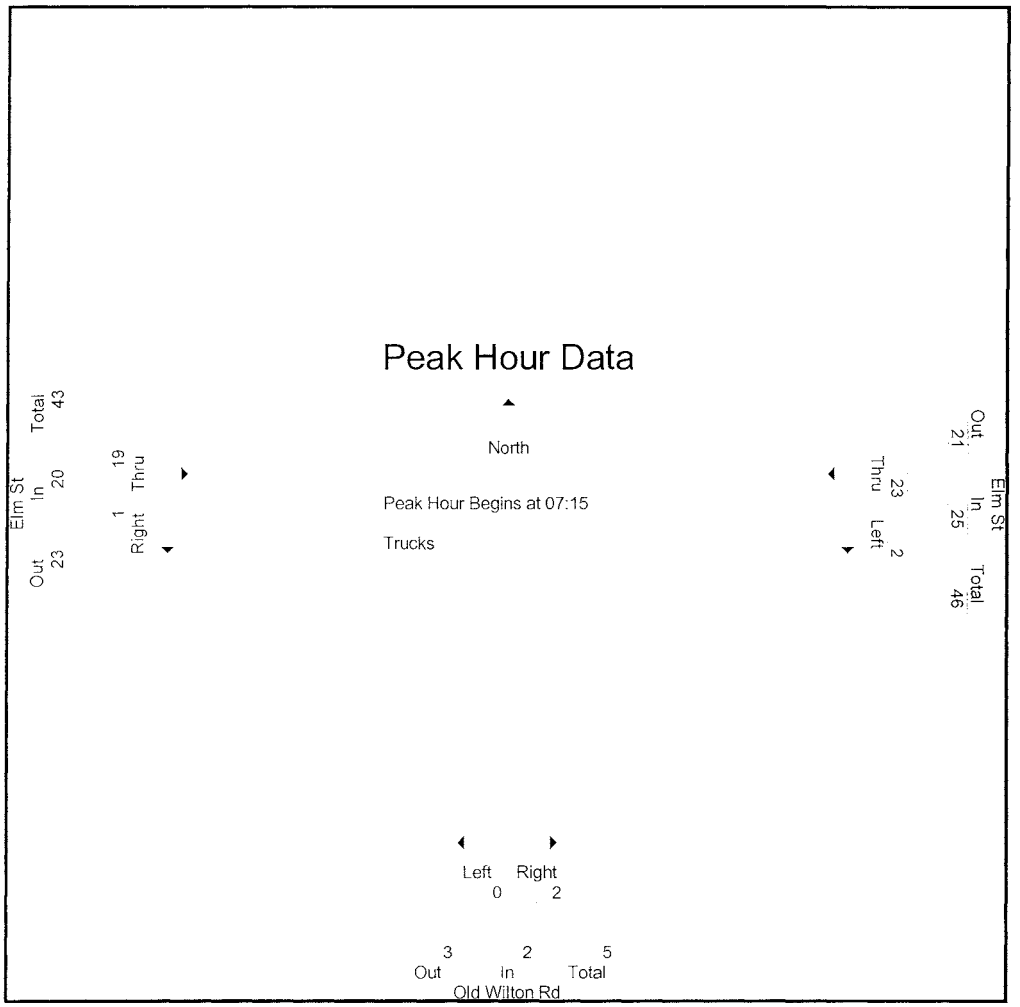

Accurate Counts
978-664-2565

N/S Street : Old Wilton Road
E/W Street: Elm Street
City/State : Milford, NH
Weather : Rain

File Name : 51784003
Site Code : 51784003
Start Date : 5/2/2006
Page No : 1

Groups Printed- Cars - Trucks

	Elm St From East		Old Wilton Rd From South		Elm St From West		
Start Time	Left	Thru	Left	Right	Thru	Right	Int. Total
16:00	39	88	0	33	65	2	227
16:15	27	100	4	31	70	0	232
16:30	36	89	0	32	74	2	233
16:45	39	85	1	35	68	1	229
Total	141	362	5	131	277	5	921
17:00	37	110	0	41	61	3	252
17:15	32	112	0	36	74	1	255
17:30	16	85	1	30	48	0	180
17:45	24	81	0	23	74	1	203
Total	109	388	1	130	257	5	890
Grand Total	250	750	6	261	534	10	1811
Apprch %	25	75	2.2	97.8	98.2	1.8	
Total %	13.8	41.4	0.3	14.4	29.5	0.6	
Cars	246	735	6	257	517	10	1771
% Cars	98.4	98	100	98.5	96.8	100	97.8
Trucks	4	15	0	4	17	0	40
% Trucks	1.6	2	0	1.5	3.2	0	2.2

	Elm St From East			Old Wilton Rd From South			Elm St From West			
Start Time	Left	Thru	App. Total	Left	Right	App. Total	Thru	Right	App. Total	Int. Total
Peak Hour Analysis From 16:00 to 17:45 - Peak 1 of 1										
Peak Hour for Entire Intersection Begins at 16:30										
16:30	36	89	125	0	32	32	**74**	2	**76**	233
16:45	**39**	85	124	**1**	35	36	68	1	69	229
17:00	37	110	**147**	0	**41**	**41**	61	**3**	64	252
17:15	32	**112**	144	0	36	36	74	1	75	**255**
Total Volume	144	396	540	1	144	145	277	7	284	969
% App. Total	26.7	73.3		0.7	99.3		97.5	2.5		
PHF	.923	.884	.918	.250	.878	.884	.936	.583	.934	.950

Peak Hour Analysis From 16:00 to 17:45 - Peak 1 of 1
Peak Hour for Each Approach Begins at:

	16:30			16:30			16:30		
+0 mins.	36	89	125	0	32	32	**74**	2	**76**
+15 mins.	**39**	85	124	**1**	35	36	68	1	69
+30 mins.	37	110	**147**	0	**41**	**41**	61	**3**	64
+45 mins.	32	**112**	144	0	36	36	74	1	75
Total Volume	144	396	540	1	144	145	277	7	284
% App. Total	26.7	73.3		0.7	99.3		97.5	2.5	
PHF	.923	.884	.918	.250	.878	.884	.936	.583	.934

Accurate Counts
978-664-2565

N/S Street : Old Wilton Road
E/W Street: Elm Street
City/State : Milford, NH
Weather : Rain

File Name : 51784003
Site Code : 51784003
Start Date : 5/2/2006
Page No : 1

Groups Printed- Cars

	Elm St From East		Old Wilton Rd From South		Elm St From West		
Start Time	Left	Thru	Left	Right	Thru	Right	Int. Total
16:00	39	86	0	32	60	2	219
16:15	27	95	4	31	68	0	225
16:30	35	87	0	32	71	2	227
16:45	39	85	1	32	68	1	226
Total	140	353	5	127	267	5	897
17:00	36	108	0	41	59	3	247
17:15	30	111	0	36	72	1	250
17:30	16	84	1	30	45	0	176
17:45	24	79	0	23	74	1	201
Total	106	382	1	130	250	5	874
Grand Total	246	735	6	257	517	10	1771
Apprch %	25.1	74.9	2.3	97.7	98.1	1.9	
Total %	13.9	41.5	0.3	14.5	29.2	0.6	

	Elm St From East			Old Wilton Rd From South			Elm St From West			
Start Time	Left	Thru	App. Total	Left	Right	App. Total	Thru	Right	App. Total	Int. Total
Peak Hour Analysis From 16:00 to 17:45 - Peak 1 of 1										
Peak Hour for Entire Intersection Begins at 16:30										
16:30	35	87	122	0	32	32	71	2	**73**	227
16:45	**39**	85	124	**1**	32	33	68	1	69	226
17:00	36	108	**144**	0	**41**	**41**	59	**3**	62	247
17:15	30	**111**	141	0	36	36	**72**	1	73	**250**
Total Volume	140	391	531	1	141	142	270	7	277	950
% App. Total	26.4	73.6		0.7	99.3		97.5	2.5		
PHF	.897	.881	.922	.250	.860	.866	.938	.583	.949	.950

Peak Hour Analysis From 16:00 to 17:45 - Peak 1 of 1
Peak Hour for Each Approach Begins at:

	16:30			16:30			16:30		
+0 mins.	35	87	122	0	32	32	71	2	**73**
+15 mins.	**39**	85	124	**1**	32	33	68	1	69
+30 mins.	36	108	**144**	0	**41**	**41**	59	**3**	62
+45 mins.	30	**111**	141	0	36	36	**72**	1	73
Total Volume	140	391	531	1	141	142	270	7	277
% App. Total	26.4	73.6		0.7	99.3		97.5	2.5	
PHF	.897	.881	.922	.250	.860	.866	.938	.583	.949

Accurate Counts
978-664-2565

N/S Street : Old Wilton Road
E/W Street: Elm Street
City/State : Milford, NH
Weather : Rain

File Name : 51784003
Site Code : 51784003
Start Date : 5/2/2006
Page No : 1

Groups Printed- Trucks

	Elm St From East		Old Wilton Rd From South		Elm St From West		
Start Time	Left	Thru	Left	Right	Thru	Right	Int. Total
16:00	0	2	0	1	5	0	8
16:15	0	5	0	0	2	0	7
16:30	1	2	0	0	3	0	6
16:45	0	0	0	3	0	0	3
Total	1	9	0	4	10	0	24
17:00	1	2	0	0	2	0	5
17:15	2	1	0	0	2	0	5
17:30	0	1	0	0	3	0	4
17:45	0	2	0	0	0	0	2
Total	3	6	0	0	7	0	16
Grand Total	4	15	0	4	17	0	40
Apprch %	21.1	78.9	0	100	100	0	
Total %	10	37.5	0	10	42.5	0	

	Elm St From East			Old Wilton Rd From South			Elm St From West			
Start Time	Left	Thru	App. Total	Left	Right	App. Total	Thru	Right	App. Total	Int. Total
Peak Hour Analysis From 16:00 to 17:45 - Peak 1 of 1										
Peak Hour for Entire Intersection Begins at 16:00										
16:00	0	2	2	0	1	1	**5**	0	**5**	**8**
16:15	0	**5**	**5**	0	0	0	2	0	2	7
16:30	**1**	2	3	0	0	0	3	0	3	6
16:45	0	0	0	0	**3**	**3**	0	0	0	3
Total Volume	1	9	10	0	4	4	10	0	10	24
% App. Total	10	90		0	100		100	0		
PHF	.250	.450	.500	.000	.333	.333	.500	.000	.500	.750

Peak Hour Analysis From 16:00 to 17:45 - Peak 1 of 1
Peak Hour for Each Approach Begins at:

	16:15			16:00			16:00		
+0 mins.	0	**5**	**5**	0	1	1	**5**	0	**5**
+15 mins.	**1**	2	3	0	0	0	2	0	2
+30 mins.	0	0	0	0	0	0	3	0	3
+45 mins.	1	2	3	0	**3**	**3**	0	0	0
Total Volume	2	9	11	0	4	4	10	0	10
% App. Total	18.2	81.8		0	100		100	0	
PHF	.500	.450	.550	.000	.333	.333	.500	.000	.500

Accurate Counts
978-664-2565

N/S Street : Old Wilton Road
E/W Street: Elm Street
City/State : Milford, NH
Weather : Rain

File Name : 51784003
Site Code : 51784003
Start Date : 5/2/2006
Page No : 1

	Elm St From East			Old Wilton Rd From South			Elm St From West			
Start Time	Left	Thru	App. Total	Left	Right	App. Total	Thru	Right	App. Total	Int. Total
Peak Hour Analysis From 16:00 to 17:45 - Peak 1 of 1										
Peak Hour for Entire Intersection Begins at 16:30										
16:30	36	89	125	0	32	32	**74**	2	**76**	233
16:45	**39**	85	124	**1**	35	36	68	1	69	229
17:00	37	110	**147**	0	**41**	**41**	61	**3**	64	252
17:15	32	**112**	144	0	36	36	74	1	75	**255**
Total Volume	144	396	540	1	144	145	277	7	284	969
% App. Total	26.7	73.3		0.7	99.3		97.5	2.5		
PHF	.923	.884	.918	.250	.878	.884	.936	.583	.934	.950

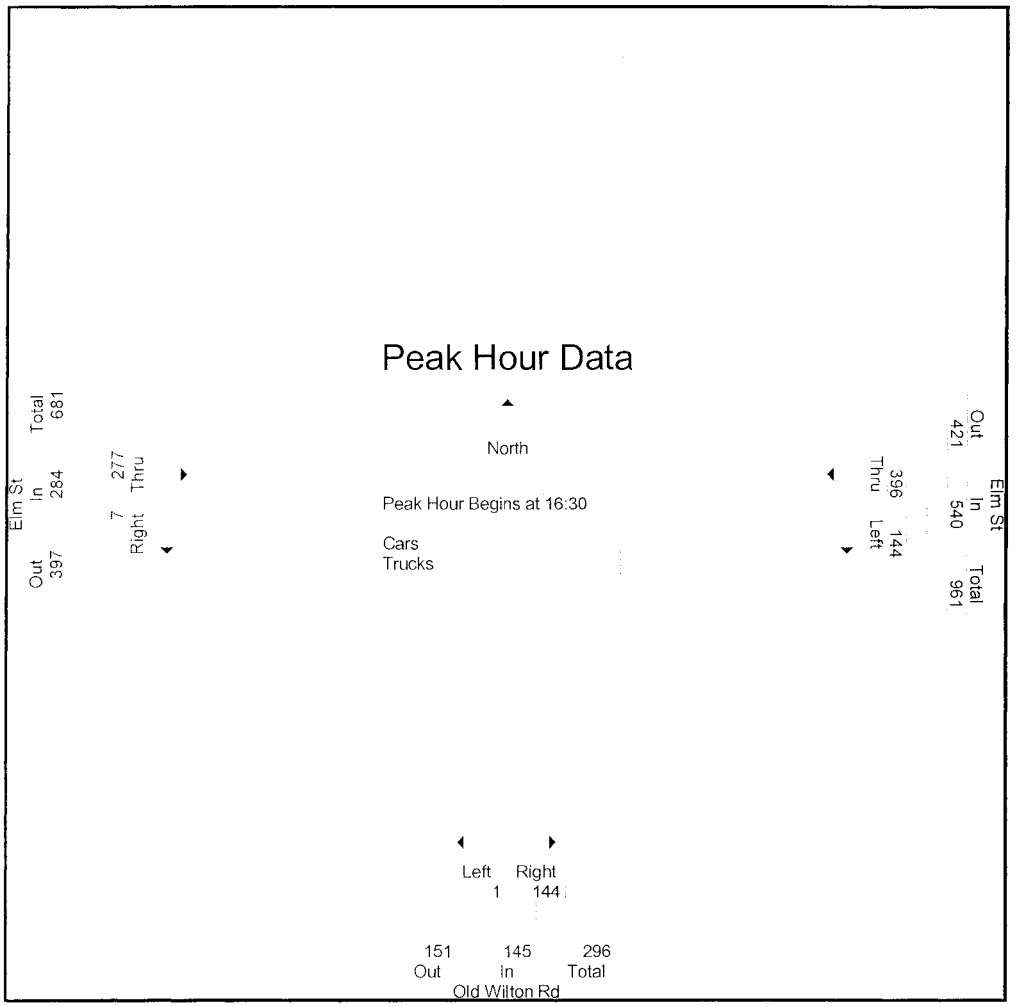

Accurate Counts
978-664-2565

N/S Street : Old Wilton Road
E/W Street: Elm Street
City/State : Milford, NH
Weather : Rain

File Name : 51784003
Site Code : 51784003
Start Date : 5/2/2006
Page No : 1

	Elm St From East			Old Wilton Rd From South			Elm St From West			
Start Time	Left	Thru	App. Total	Left	Right	App. Total	Thru	Right	App. Total	Int. Total
Peak Hour Analysis From 16:00 to 17:45 - Peak 1 of 1										
Peak Hour for Entire Intersection Begins at 16:30										
16:30	35	87	122	0	32	32	71	2	**73**	227
16:45	**39**	85	124	**1**	32	33	68	1	69	226
17:00	36	108	**144**	0	**41**	**41**	59	**3**	62	247
17:15	30	**111**	141	0	36	36	**72**	1	73	**250**
Total Volume	140	391	531	1	141	142	270	7	277	950
% App. Total	26.4	73.6		0.7	99.3		97.5	2.5		
PHF	.897	.881	.922	.250	.860	.866	.938	.583	.949	.950

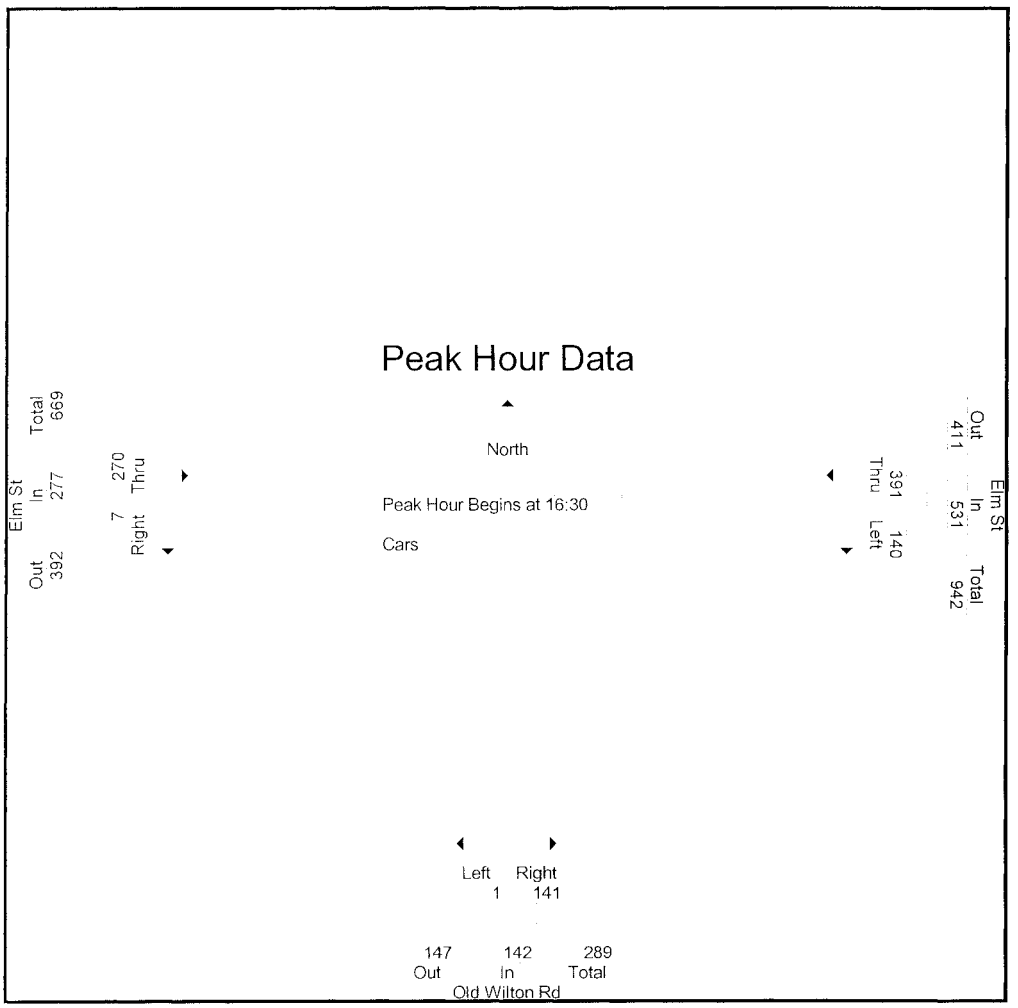

Accurate Counts
978-664-2565

N/S Street : Old Wilton Road
E/W Street: Elm Street
City/State : Milford, NH
Weather : Rain

File Name : 51784003
Site Code : 51784003
Start Date : 5/2/2006
Page No : 1

	Elm St From East			Old Wilton Rd From South			Elm St From West			
Start Time	Left	Thru	App. Total	Left	Right	App. Total	Thru	Right	App. Total	Int. Total
Peak Hour Analysis From 16:00 to 17:45 - Peak 1 of 1										
Peak Hour for Entire Intersection Begins at 16:00										
16:00	0	2	2	0	1	1	**5**	0	**5**	**8**
16:15	0	**5**	**5**	0	0	0	2	0	2	7
16:30	**1**	2	3	0	0	0	3	0	3	6
16:45	0	0	0	0	**3**	**3**	0	0	0	3
Total Volume	1	9	10	0	4	4	10	0	10	24
% App. Total	10	90		0	100		100	0		
PHF	.250	.450	.500	.000	.333	.333	.500	.000	.500	.750

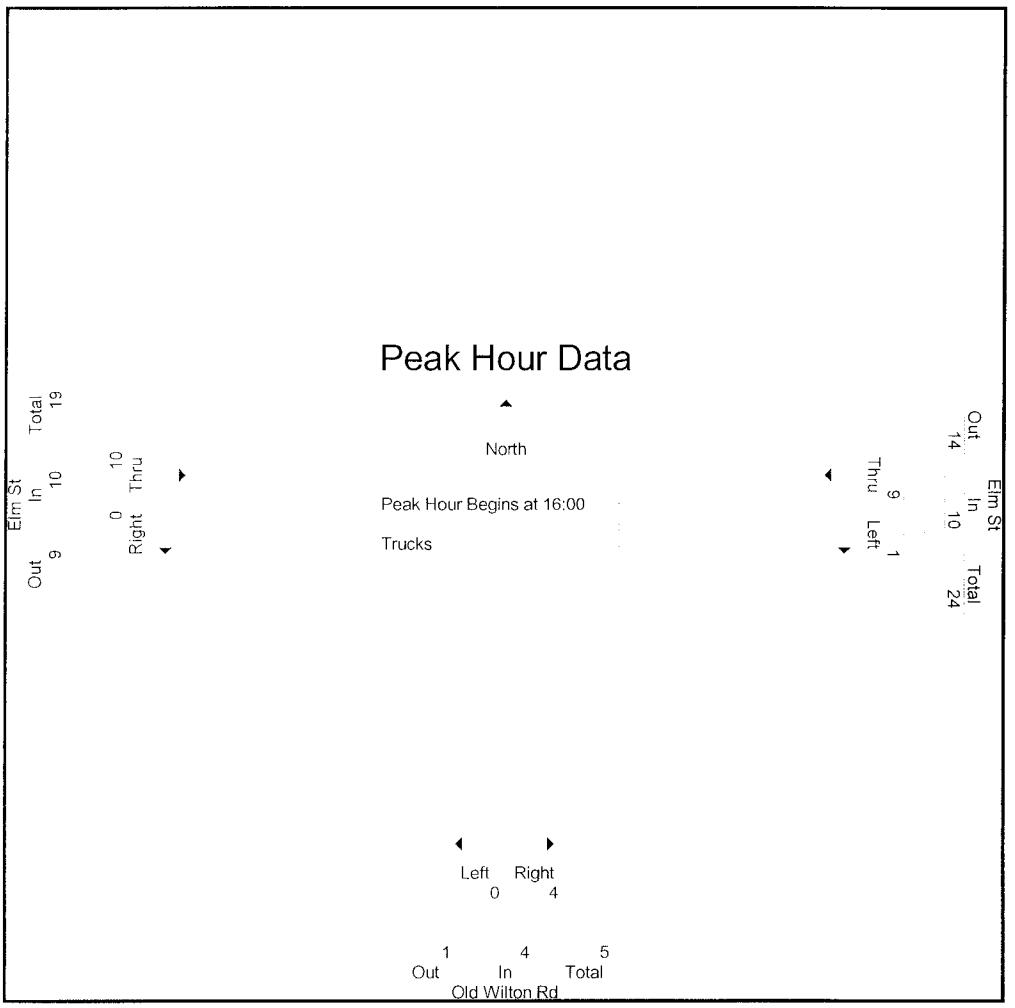

Accurate Counts
978-664-2565

N/S Street : Old Wilton Road
E/W Street: Elm Street
City/State : Milford, NH
Weather : Rain

File Name : 517840A3
Site Code : 51784003
Start Date : 5/13/2006
Page No : 1

Groups Printed- Cars - Trucks

	Elm St From East		Old Wilton Rd From South		Elm St From West		
Start Time	Left	Thru	Left	Right	Thru	Right	Int. Total
10:00	24	52	0	17	55	2	150
10:15	25	53	0	31	89	0	198
10:30	23	79	0	27	90	0	219
10:45	28	64	0	26	83	0	201
Total	100	248	0	101	317	2	768
11:00	26	89	1	22	80	2	220
11:15	33	80	1	31	69	0	214
11:30	28	87	2	31	82	0	230
11:45	39	76	0	35	90	3	243
Total	126	332	4	119	321	5	907
12:00	31	66	0	33	87	0	217
12:15	23	82	0	39	94	1	239
12:30	26	81	0	35	67	0	209
12:45	43	61	2	32	71	0	209
Total	123	290	2	139	319	1	874
13:00	32	78	0	31	76	1	218
13:15	36	84	0	33	84	0	237
13:30	38	83	0	25	75	2	223
13:45	31	76	2	22	57	0	188
Total	137	321	2	111	292	3	866
Grand Total	486	1191	8	470	1249	11	3415
Apprch %	29	71	1.7	98.3	99.1	0.9	
Total %	14.2	34.9	0.2	13.8	36.6	0.3	
Cars	481	1181	8	466	1240	10	3386
% Cars	99	99.2	100	99.1	99.3	90.9	99.2
Trucks	5	10	0	4	9	1	29
% Trucks	1	0.8	0	0.9	0.7	9.1	0.8

	Elm St From East			Old Wilton Rd From South			Elm St From West			
Start Time	Left	Thru	App. Total	Left	Right	App. Total	Thru	Right	App. Total	Int. Total
Peak Hour Analysis From 10:00 to 13:45 - Peak 1 of 1										
Peak Hour for Entire Intersection Begins at 11:30										
11:30	28	**87**	**115**	**2**	31	33	82	0	82	230
11:45	**39**	76	115	0	35	35	90	**3**	93	**243**
12:00	31	66	97	0	33	33	87	0	87	217
12:15	23	82	105	0	**39**	**39**	**94**	1	**95**	239
Total Volume	121	311	432	2	138	140	353	4	357	929
% App. Total	28	72		1.4	98.6		98.9	1.1		
PHF	.776	.894	.939	.250	.885	.897	.939	.333	.939	.956

Peak Hour Analysis From 10:00 to 13:45 - Peak 1 of 1
Peak Hour for Each Approach Begins at:

	11:00			11:45			11:30		
+0 mins.	26	**89**	**115**	0	35	35	82	0	82
+15 mins.	33	80	113	0	33	33	90	**3**	93
+30 mins.	28	87	115	0	**39**	**39**	87	0	87
+45 mins.	**39**	76	115	0	35	35	**94**	1	**95**
Total Volume	126	332	458	0	142	142	353	4	357
% App. Total	27.5	72.5		0	100		98.9	1.1	
PHF	.808	.933	.996	.000	.910	.910	.939	.333	.939

Accurate Counts
978-664-2565

N/S Street : Old Wilton Road
E/W Street: Elm Street
City/State : Milford, NH
Weather : Rain

File Name : 517840A3
Site Code : 51784003
Start Date : 5/13/2006
Page No : 1

Groups Printed- Cars

	Elm St From East		Old Wilton Rd From South		Elm St From West		
Start Time	Left	Thru	Left	Right	Thru	Right	Int. Total
10:00	24	51	0	17	55	2	149
10:15	25	51	0	30	89	0	195
10:30	23	79	0	26	90	0	218
10:45	28	63	0	26	83	0	200
Total	100	244	0	99	317	2	762
11:00	26	89	1	22	79	2	219
11:15	32	80	1	31	69	0	213
11:30	27	87	2	31	79	0	226
11:45	39	76	0	35	90	3	243
Total	124	332	4	119	317	5	901
12:00	31	65	0	33	85	0	214
12:15	23	82	0	39	94	1	239
12:30	26	81	0	35	67	0	209
12:45	42	60	2	32	70	0	206
Total	122	288	2	139	316	1	868
13:00	32	77	0	31	75	1	216
13:15	34	83	0	33	83	0	233
13:30	38	82	0	24	75	1	220
13:45	31	75	2	21	57	0	186
Total	135	317	2	109	290	2	855
Grand Total	481	1181	8	466	1240	10	3386
Apprch %	28.9	71.1	1.7	98.3	99.2	0.8	
Total %	14.2	34.9	0.2	13.8	36.6	0.3	

	Elm St From East			Old Wilton Rd From South			Elm St From West			
Start Time	Left	Thru	App. Total	Left	Right	App. Total	Thru	Right	App. Total	Int. Total
Peak Hour Analysis From 10:00 to 13:45 - Peak 1 of 1										
Peak Hour for Entire Intersection Begins at 11:30										
11:30	27	**87**	114	**2**	31	33	79	0	79	226
11:45	**39**	76	**115**	0	35	35	90	**3**	93	**243**
12:00	31	65	96	0	33	33	85	0	85	214
12:15	23	82	105	0	**39**	**39**	**94**	1	**95**	239
Total Volume	120	310	430	2	138	140	348	4	352	922
% App. Total	27.9	72.1		1.4	98.6		98.9	1.1		
PHF	.769	.891	.935	.250	.885	.897	.926	.333	.926	.949

Peak Hour Analysis From 10:00 to 13:45 - Peak 1 of 1
Peak Hour for Each Approach Begins at:

	11:00			11:45			11:30		
+0 mins	26	**89**	**115**	0	35	35	79	0	79
+15 mins.	32	80	112	0	33	33	90	**3**	93
+30 mins.	27	87	114	0	**39**	**39**	85	0	85
+45 mins.	**39**	76	115	0	35	35	**94**	1	**95**
Total Volume	124	332	456	0	142	142	348	4	352
% App. Total	27.2	72.8		0	100		98.9	1.1	
PHF	.795	.933	.991	.000	.910	.910	.926	.333	.926

Accurate Counts
978-664-2565

N/S Street : Old Wilton Road
E/W Street: Elm Street
City/State : Milford, NH
Weather : Rain

File Name : 517840A3
Site Code : 51784003
Start Date : 5/13/2006
Page No : 1

Groups Printed- Trucks

	Elm St From East		Old Wilton Rd From South		Elm St From West		
Start Time	Left	Thru	Left	Right	Thru	Right	Int. Total
10:00	0	1	0	0	0	0	1
10:15	0	2	0	1	0	0	3
10:30	0	0	0	1	0	0	1
10:45	0	1	0	0	0	0	1
Total	0	4	0	2	0	0	6
11:00	0	0	0	0	1	0	1
11:15	1	0	0	0	0	0	1
11:30	1	0	0	0	3	0	4
11:45	0	0	0	0	0	0	0
Total	2	0	0	0	4	0	6
12:00	0	1	0	0	2	0	3
12:15	0	0	0	0	0	0	0
12:30	0	0	0	0	0	0	0
12:45	1	1	0	0	1	0	3
Total	1	2	0	0	3	0	6
13:00	0	1	0	0	1	0	2
13:15	2	1	0	0	1	0	4
13:30	0	1	0	1	0	1	3
13:45	0	1	0	1	0	0	2
Total	2	4	0	2	2	1	11
Grand Total	5	10	0	4	9	1	29
Apprch %	33.3	66.7	0	100	90	10	
Total %	17.2	34.5	0	13.8	31	3.4	

	Elm St From East			Old Wilton Rd From South			Elm St From West			
Start Time	Left	Thru	App. Total	Left	Right	App. Total	Thru	Right	App. Total	Int. Total
Peak Hour Analysis From 10:00 to 13:45 - Peak 1 of 1										
Peak Hour for Entire Intersection Begins at 12:45										
12:45	1	**1**	2	0	0	0	**1**	0	**1**	3
13:00	0	1	1	0	0	0	1	0	1	2
13:15	**2**	1	**3**	0	0	0	1	0	1	**4**
13:30	0	1	1	0	**1**	**1**	0	**1**	1	3
Total Volume	3	4	7	0	1	1	3	1	4	12
% App. Total	42.9	57.1		0	100		75	25		
PHF	.375	1.000	.583	.000	.250	.250	.750	.250	1.000	.750

Peak Hour Analysis From 10:00 to 13:45 - Peak 1 of 1
Peak Hour for Each Approach Begins at:

	12:45			10:00			11:15		
+0 mins	1	**1**	2	0	0	0	0	0	0
+15 mins.	0	1	1	0	**1**	**1**	**3**	0	**3**
+30 mins.	**2**	1	**3**	0	1	1	0	0	0
+45 mins.	0	1	1	0	0	0	2	0	2
Total Volume	3	4	7	0	2	2	5	0	5
% App. Total	42.9	57.1		0	100		100	0	
PHF	.375	1.000	.583	.000	.500	.500	.417	.000	.417

Accurate Counts
978-664-2565

N/S Street : Old Wilton Road
E/W Street: Elm Street
City/State : Milford, NH
Weather : Rain

File Name : 517840A3
Site Code : 51784003
Start Date : 5/13/2006
Page No : 1

	Elm St From East			Old Wilton Rd From South			Elm St From West			
Start Time	Left	Thru	App Total	Left	Right	App. Total	Thru	Right	App. Total	Int. Total
Peak Hour Analysis From 10:00 to 13:45 - Peak 1 of 1										
Peak Hour for Entire Intersection Begins at 11:30										
11:30	28	**87**	**115**	**2**	31	33	82	0	82	230
11:45	**39**	76	115	0	35	35	90	**3**	93	**243**
12:00	31	66	97	0	33	33	87	0	87	217
12:15	23	82	105	0	**39**	**39**	**94**	1	**95**	239
Total Volume	121	311	432	2	138	140	353	4	357	929
% App. Total	28	72		1.4	98.6		98.9	1.1		
PHF	.776	.894	.939	.250	.885	.897	.939	.333	.939	.956

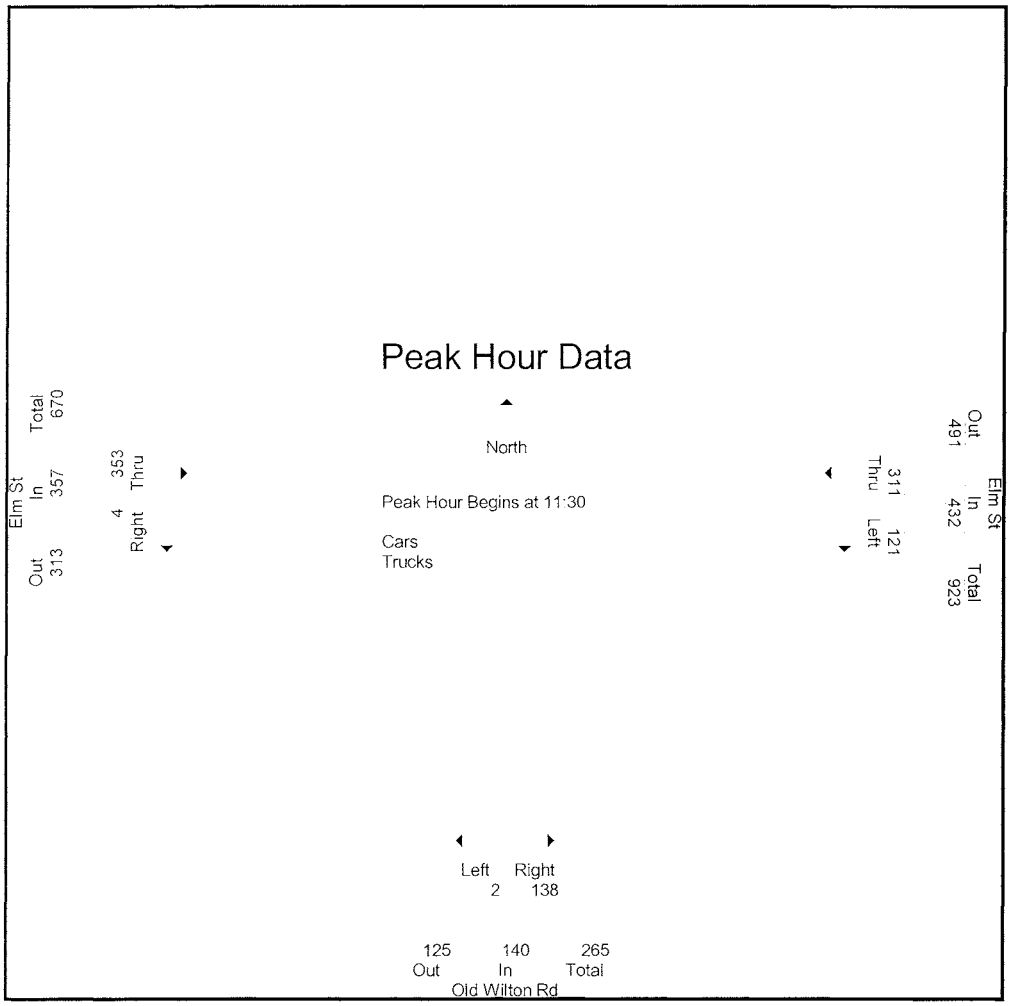

Accurate Counts
978-664-2565

N/S Street : Old Wilton Road
E/W Street: Elm Street
City/State : Milford, NH
Weather : Rain

File Name : 517840A3
Site Code : 51784003
Start Date : 5/13/2006
Page No : 1

	Elm St From East			Old Wilton Rd From South			Elm St From West			
Start Time	Left	Thru	App. Total	Left	Right	App. Total	Thru	Right	App. Total	Int. Total
Peak Hour Analysis From 10:00 to 13:45 - Peak 1 of 1										
Peak Hour for Entire Intersection Begins at 11:30										
11:30	27	**87**	114	**2**	31	33	79	0	79	226
11:45	**39**	76	**115**	0	35	35	90	**3**	93	**243**
12:00	31	65	96	0	33	33	85	0	85	214
12:15	23	82	105	0	**39**	**39**	**94**	1	**95**	239
Total Volume	120	310	430	2	138	140	348	4	352	922
% App. Total	27.9	72.1		1.4	98.6		98.9	1.1		
PHF	.769	.891	.935	.250	.885	.897	.926	.333	.926	.949

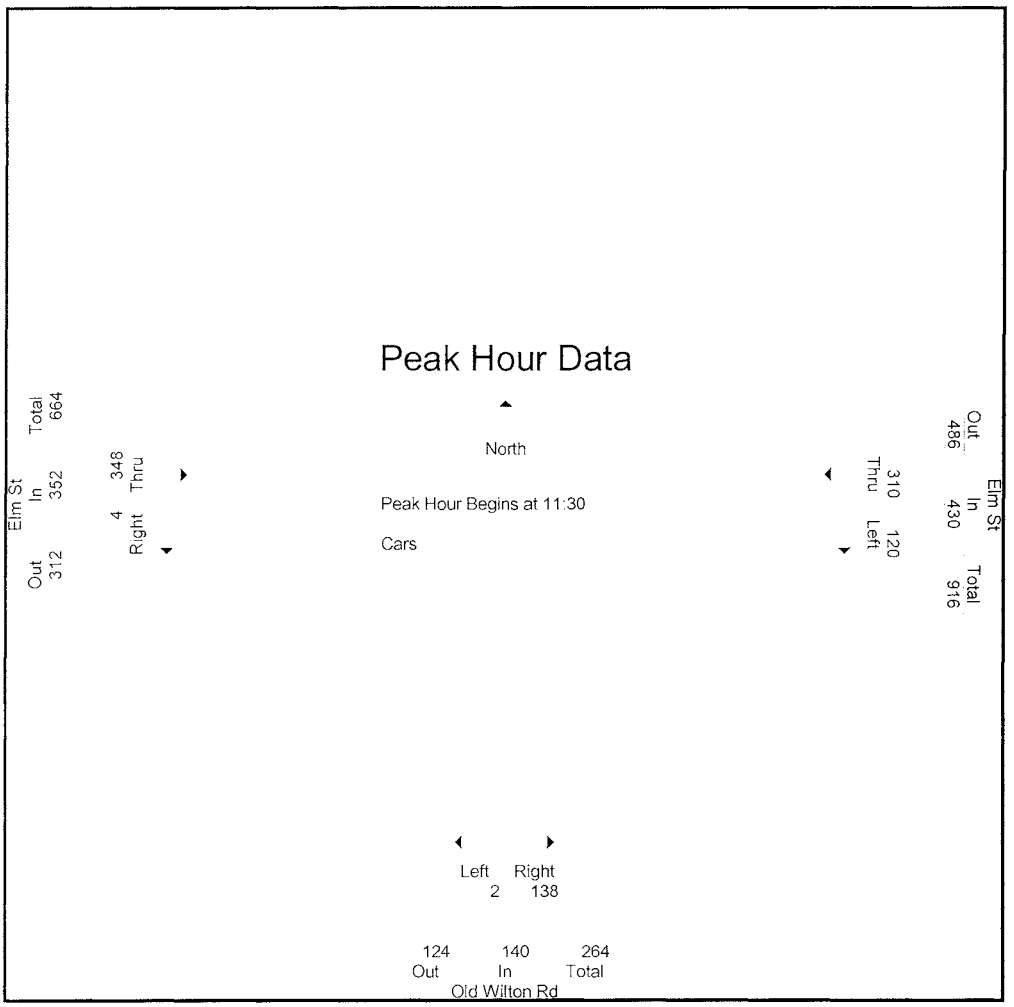

Accurate Counts
978-664-2565

N/S Street : Old Wilton Road
E/W Street: Elm Street
City/State : Milford, NH
Weather : Rain

File Name : 517840A3
Site Code : 51784003
Start Date : 5/13/2006
Page No : 1

	Elm St From East			Old Wilton Rd From South			Elm St From West			
Start Time	Left	Thru	App Total	Left	Right	App. Total	Thru	Right	App. Total	Int. Total
Peak Hour Analysis From 10:00 to 13:45 - Peak 1 of 1										
Peak Hour for Entire Intersection Begins at 12:45										
12:45	1	**1**	2	0	0	0	**1**	0	**1**	3
13:00	0	1	1	0	0	0	1	0	1	2
13:15	**2**	1	**3**	0	0	0	1	0	1	**4**
13:30	0	1	1	0	**1**	**1**	0	**1**	1	3
Total Volume	3	4	7	0	1	1	3	1	4	12
% App. Total	42.9	57.1		0	100		75	25		
PHF	.375	1.000	.583	.000	.250	.250	.750	.250	1.000	.750

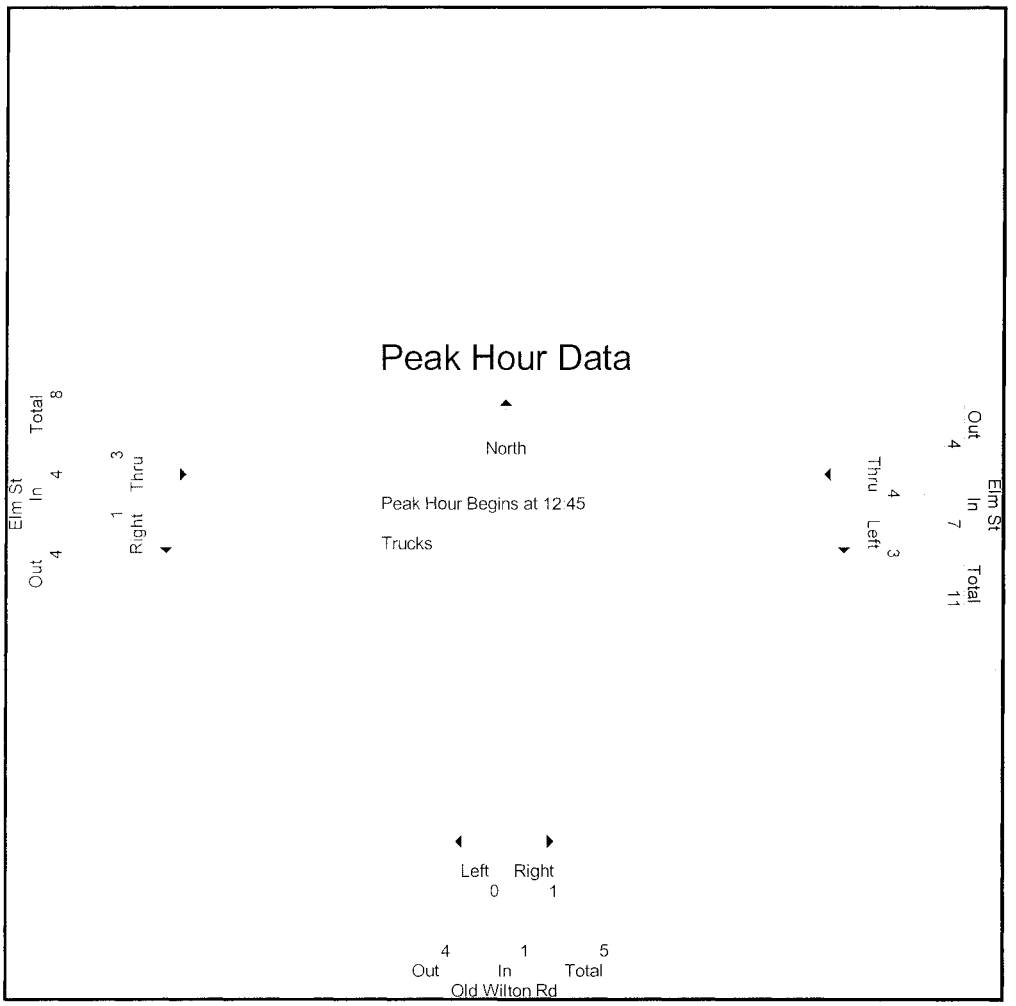

Attachment D-2d

N River Rd (Milford Bypass)/Elm Street Intersection

Accurate Counts
978-664-2565

N/S Street : N River Rd/Milford Bypass
E/W Street: Elm Street
City/State : Milford, NH
Weather : Rain

File Name : 51784004
Site Code : 51784004
Start Date : 5/2/2006
Page No : 1

Groups Printed- Cars - Trucks

	N. River Rd From North			Elm St From East			Milford Bypass From South			Elm St From West			
Start Time	Left	Thru	Right	Left	Thru	Right	Left	Thru	Right	Left	Thru	Right	Int. Total
07:00	22	20	13	4	38	7	77	9	8	20	61	228	507
07:15	27	30	13	5	34	10	102	12	3	12	81	231	560
07:30	14	37	20	5	52	7	113	5	3	9	45	212	522
07:45	26	26	17	8	56	4	121	6	4	7	67	217	559
Total	89	113	63	22	180	28	413	32	18	48	254	888	2148
08:00	23	39	15	5	37	6	110	16	6	15	81	230	583
08:15	20	30	12	5	41	5	117	8	5	7	42	193	485
08:30	9	34	9	9	33	3	103	10	6	8	45	149	418
08:45	13	23	17	10	39	10	103	7	5	4	47	147	425
Total	65	126	53	29	150	24	433	41	22	34	215	719	1911
Grand Total	154	239	116	51	330	52	846	73	40	82	469	1607	4059
Apprch %	30.3	47	22.8	11.8	76.2	12	88.2	7.6	4.2	3.8	21.7	74.5	
Total %	3.8	5.9	2.9	1.3	8.1	1.3	20.8	1.8	1	2	11.6	39.6	
Cars	153	235	110	39	305	48	733	69	30	78	450	1517	3767
% Cars	99.4	98.3	94.8	76.5	92.4	92.3	86.6	94.5	75	95.1	95.9	94.4	92.8
Trucks	1	4	6	12	25	4	113	4	10	4	19	90	292
% Trucks	0.6	1.7	5.2	23.5	7.6	7.7	13.4	5.5	25	4.9	4.1	5.6	7.2

	N. River Rd From North				Elm St From East				Milford Bypass From South				Elm St From West				
Start Time	Left	Thru	Right	App. Total	Left	Thru	Right	App. Total	Left	Thru	Right	App. Total	Left	Thru	Right	App. Total	Int. Total
Peak Hour Analysis From 07:00 to 08:45 - Peak 1 of 1																	
Peak Hour for Entire Intersection Begins at 07:15																	
07:15	**27**	30	13	70	5	34	**10**	49	102	12	3	117	12	**81**	**231**	324	560
07:30	14	37	**20**	71	5	52	7	64	113	5	3	121	9	45	212	266	522
07:45	26	26	17	69	**8**	**56**	4	**68**	**121**	6	4	131	7	67	217	291	559
08:00	23	**39**	15	**77**	5	37	6	48	110	**16**	**6**	**132**	**15**	81	230	**326**	**583**
Total Volume	90	132	65	287	23	179	27	229	446	39	16	501	43	274	890	1207	2224
% App. Total	31.4	46	22.6		10	78.2	11.8		89	7.8	3.2		3.6	22.7	73.7		
PHF	.833	.846	.813	.932	.719	.799	.675	.842	.921	.609	.667	.949	.717	.846	.963	.926	.954

Peak Hour Analysis From 07:00 to 08:45 - Peak 1 of 1
Peak Hour for Each Approach Begins at:

	07:15				07:30				07:30				07:15				
+0 mins.	**27**	30	13	70	5	52	**7**	64	113	5	3	121	12	**81**	**231**	324	
+15 mins.	14	37	**20**	71	**8**	**56**	4	**68**	**121**	6	4	131	9	45	212	266	
+30 mins.	26	26	17	69	5	37	6	48	110	**16**	**6**	**132**	7	67	217	291	
+45 mins.	23	**39**	15	**77**	5	41	5	51	117	8	5	130	**15**	81	230	**326**	
Total Volume	90	132	65	287	23	186	22	231	461	35	18	514	43	274	890	1207	
% App. Total	31.4	46	22.6		10	80.5	9.5		89.7	6.8	3.5		3.6	22.7	73.7		
PHF	.833	.846	.813	.932	.719	.830	.786	.849	.952	.547	.750	.973	.717	.846	.963	.926	

Accurate Counts
978-664-2565

N/S Street : N River Rd/Milford Bypass
E/W Street: Elm Street
City/State : Milford, NH
Weather : Rain

File Name : 51784004
Site Code : 51784004
Start Date : 5/2/2006
Page No : 1

Groups Printed- Cars

	N. River Rd From North			Elm St From East			Milford Bypass From South			Elm St From West			
Start Time	Left	Thru	Right	Left	Thru	Right	Left	Thru	Right	Left	Thru	Right	Int. Total
07:00	22	19	12	2	38	6	74	9	8	19	61	219	489
07:15	27	30	12	3	32	9	88	12	1	11	77	218	520
07:30	13	36	20	2	49	7	98	5	1	9	44	206	490
07:45	26	26	17	7	50	3	104	5	4	6	67	205	520
Total	88	111	61	14	169	25	364	31	14	45	249	848	2019
08:00	23	39	15	4	34	6	97	15	5	14	76	218	546
08:15	20	30	10	4	39	5	106	8	2	7	40	179	450
08:30	9	33	8	7	29	3	81	8	5	8	42	142	375
08:45	13	22	16	10	34	9	85	7	4	4	43	130	377
Total	65	124	49	25	136	23	369	38	16	33	201	669	1748
Grand Total	153	235	110	39	305	48	733	69	30	78	450	1517	3767
Apprch %	30.7	47.2	22.1	9.9	77.8	12.2	88.1	8.3	3.6	3.8	22	74.2	
Total %	4.1	6.2	2.9	1	8.1	1.3	19.5	1.8	0.8	2.1	11.9	40.3	

	N. River Rd From North				Elm St From East				Milford Bypass From South				Elm St From West				
Start Time	Left	Thru	Right	App. Total	Left	Thru	Right	App. Total	Left	Thru	Right	App. Total	Left	Thru	Right	App. Total	Int. Total
Peak Hour Analysis From 07:00 to 08:45 - Peak 1 of 1																	
Peak Hour for Entire Intersection Begins at 07:15																	
07:15	**27**	30	12	69	3	32	**9**	44	88	12	1	101	11	**77**	**218**	306	520
07:30	13	36	**20**	69	2	49	7	58	98	5	1	104	9	44	206	259	490
07:45	26	26	17	69	**7**	**50**	3	**60**	**104**	5	4	113	6	67	205	278	520
08:00	23	**39**	15	**77**	4	34	6	44	97	**15**	**5**	**117**	**14**	76	218	**308**	**546**
Total Volume	89	131	64	284	16	165	25	206	387	37	11	435	40	264	847	1151	2076
% App. Total	31.3	46.1	22.5		7.8	80.1	12.1		89	8.5	2.5		3.5	22.9	73.6		
PHF	.824	.840	.800	.922	.571	.825	.694	.858	.930	.617	.550	.929	.714	.857	.971	.934	.951

Peak Hour Analysis From 07:00 to 08:45 - Peak 1 of 1
Peak Hour for Each Approach Begins at:

	07:15				07:30				07:30				07:15			
+0 mins.	**27**	30	12	69	2	49	**7**	58	98	5	1	104	11	**77**	**218**	306
+15 mins.	13	36	**20**	69	**7**	**50**	3	**60**	104	5	4	113	9	44	206	259
+30 mins.	26	26	17	69	4	34	6	44	97	**15**	**5**	**117**	6	67	205	278
+45 mins.	23	**39**	15	**77**	4	39	5	48	**106**	8	2	116	**14**	76	218	**308**
Total Volume	89	131	64	284	17	172	21	210	405	33	12	450	40	264	847	1151
% App. Total	31.3	46.1	22.5		8.1	81.9	10		90	7.3	2.7		3.5	22.9	73.6	
PHF	.824	.840	.800	.922	.607	.860	.750	.875	.955	.550	.600	.962	.714	.857	.971	.934

Accurate Counts
978-664-2565

N/S Street : N River Rd/Milford Bypass
E/W Street: Elm Street
City/State : Milford, NH
Weather : Rain

File Name : 51784004
Site Code : 51784004
Start Date : 5/2/2006
Page No : 1

Groups Printed- Trucks

	N. River Rd From North			Elm St From East			Milford Bypass From South			Elm St From West			
Start Time	Left	Thru	Right	Left	Thru	Right	Left	Thru	Right	Left	Thru	Right	Int. Total
07:00	0	1	1	2	0	1	3	0	0	1	0	9	18
07:15	0	0	1	2	2	1	14	0	2	1	4	13	40
07:30	1	1	0	3	3	0	15	0	2	0	1	6	32
07:45	0	0	0	1	6	1	17	1	0	1	0	12	39
Total	1	2	2	8	11	3	49	1	4	3	5	40	129
08:00	0	0	0	1	3	0	13	1	1	1	5	12	37
08:15	0	0	2	1	2	0	11	0	3	0	2	14	35
08:30	0	1	1	2	4	0	22	2	1	0	3	7	43
08:45	0	1	1	0	5	1	18	0	1	0	4	17	48
Total	0	2	4	4	14	1	64	3	6	1	14	50	163
Grand Total	1	4	6	12	25	4	113	4	10	4	19	90	292
Apprch %	9.1	36.4	54.5	29.3	61	9.8	89	3.1	7.9	3.5	16.8	79.6	
Total %	0.3	1.4	2.1	4.1	8.6	1.4	38.7	1.4	3.4	1.4	6.5	30.8	

	N. River Rd From North				Elm St From East				Milford Bypass From South				Elm St From West				
Start Time	Left	Thru	Right	App. Total	Left	Thru	Right	App. Total	Left	Thru	Right	App. Total	Left	Thru	Right	App. Total	Int. Total
Peak Hour Analysis From 07:00 to 08:45 - Peak 1 of 1																	
Peak Hour for Entire Intersection Begins at 08:00																	
08:00	0	0	0	0	1	3	0	4	13	1	1	15	**1**	**5**	12	18	37
08:15	0	0	**2**	**2**	1	2	0	3	11	0	**3**	14	0	2	14	16	35
08:30	0	**1**	1	2	**2**	4	0	**6**	**22**	**2**	1	**25**	0	3	7	10	43
08:45	0	1	1	2	0	**5**	**1**	6	18	0	1	19	0	4	**17**	**21**	**48**
Total Volume	0	2	4	6	4	14	1	19	64	3	6	73	1	14	50	65	163
% App. Total	0	33.3	66.7		21.1	73.7	5.3		87.7	4.1	8.2		1.5	21.5	76.9		
PHF	.000	.500	.500	.750	.500	.700	.250	.792	.727	.375	.500	.730	.250	.700	.735	.774	.849

Peak Hour Analysis From 07:00 to 08:45 - Peak 1 of 1
Peak Hour for Each Approach Begins at:

	08:00				07:15				08:00				08:00			
+0 mins.	0	0	0	0	2	2	**1**	5	13	1	1	15	**1**	**5**	12	18
+15 mins.	0	0	**2**	**2**	**3**	3	0	6	11	0	**3**	14	0	2	14	16
+30 mins.	0	**1**	1	2	1	**6**	1	**8**	**22**	**2**	1	**25**	0	3	7	10
+45 mins.	0	1	1	2	1	3	0	4	18	0	1	19	0	4	**17**	**21**
Total Volume	0	2	4	6	7	14	2	23	64	3	6	73	1	14	50	65
% App. Total	0	33.3	66.7		30.4	60.9	8.7		87.7	4.1	8.2		1.5	21.5	76.9	
PHF	.000	.500	.500	.750	.583	.583	.500	.719	.727	.375	.500	.730	.250	.700	.735	.774

Accurate Counts
978-664-2565

N/S Street : N River Rd/Milford Bypass
E/W Street: Elm Street
City/State : Milford, NH
Weather : Rain

File Name : 51784004
Site Code : 51784004
Start Date : 5/2/2006
Page No : 1

	N. River Rd From North				Elm St From East				Milford Bypass From South				Elm St From West				
Start Time	Left	Thru	Right	App. Total	Left	Thru	Right	App. Total	Left	Thru	Right	App. Total	Left	Thru	Right	App. Total	Int. Total
Peak Hour Analysis From 07:00 to 08:45 - Peak 1 of 1																	
Peak Hour for Entire Intersection Begins at 07:15																	
07:15	**27**	30	13	70	5	34	**10**	49	102	12	3	117	12	**81**	**231**	324	560
07:30	14	37	**20**	71	5	52	7	64	113	5	3	121	9	45	212	266	522
07:45	26	26	17	69	**8**	**56**	4	**68**	**121**	6	4	131	7	67	217	291	559
08:00	23	**39**	15	**77**	5	37	6	48	110	**16**	**6**	**132**	**15**	81	230	**326**	**583**
Total Volume	90	132	65	287	23	179	27	229	446	39	16	501	43	274	890	1207	2224
% App. Total	31.4	46	22.6		10	78.2	11.8		89	7.8	3.2		3.6	22.7	73.7		
PHF	.833	.846	.813	.932	.719	.799	.675	.842	.921	.609	.667	.949	.717	.846	.963	.926	.954

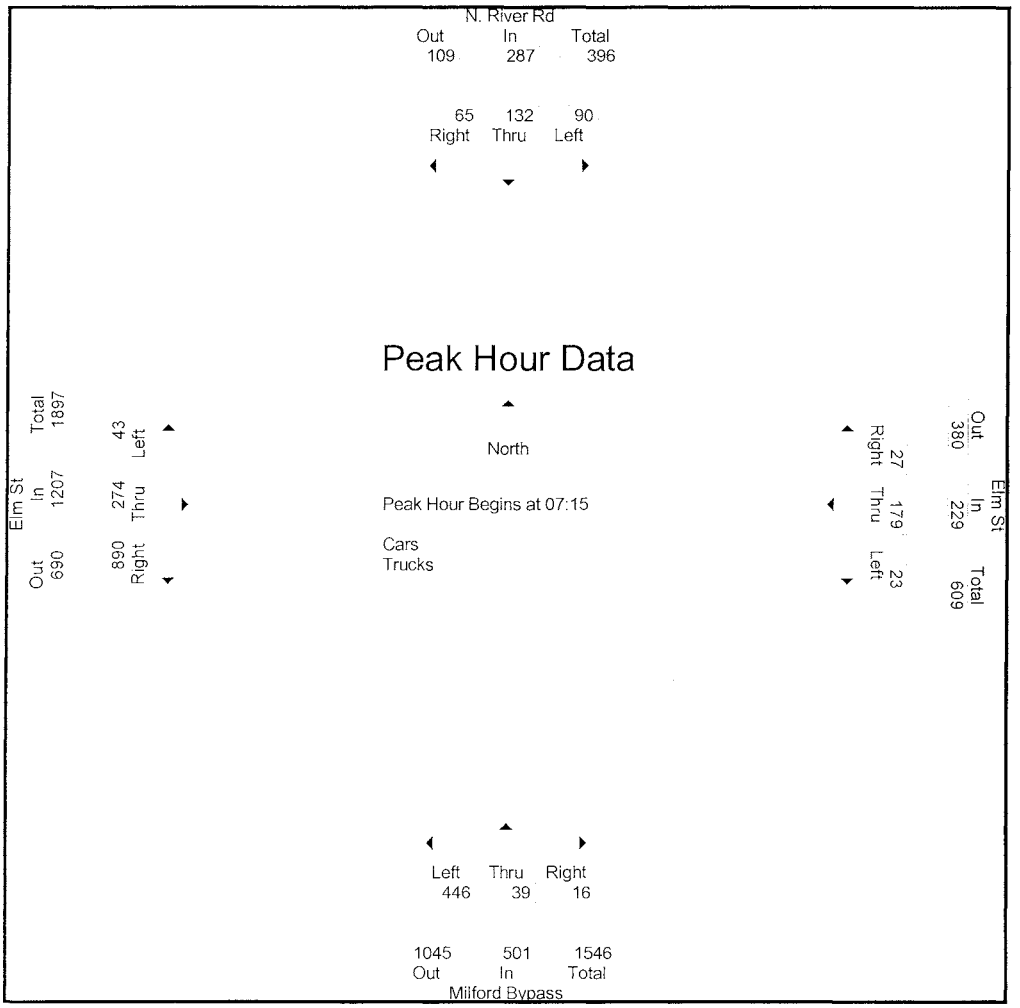

Accurate Counts
978-664-2565

N/S Street : N River Rd/Milford Bypass
E/W Street: Elm Street
City/State : Milford, NH
Weather : Rain

File Name : 51784004
Site Code : 51784004
Start Date : 5/2/2006
Page No : 1

	N River Rd From North				Elm St From East				Milford Bypass From South				Elm St From West				
Start Time	Left	Thru	Right	App. Total	Left	Thru	Right	App. Total	Left	Thru	Right	App. Total	Left	Thru	Right	App. Total	Int. Total
Peak Hour Analysis From 07:00 to 08:45 - Peak 1 of 1																	
Peak Hour for Entire Intersection Begins at 07:15																	
07:15	**27**	30	12	69	3	32	**9**	44	88	12	1	101	11	**77**	**218**	306	520
07:30	13	36	**20**	69	2	49	7	58	98	5	1	104	9	44	206	259	490
07:45	26	26	17	69	**7**	**50**	3	**60**	**104**	5	4	113	6	67	205	278	520
08:00	23	**39**	15	**77**	4	34	6	44	97	**15**	**5**	**117**	**14**	76	218	**308**	**546**
Total Volume	89	131	64	284	16	165	25	206	387	37	11	435	40	264	847	1151	2076
% App. Total	31.3	46.1	22.5		7.8	80.1	12.1		89	8.5	2.5		3.5	22.9	73.6		
PHF	.824	.840	.800	.922	.571	.825	.694	.858	.930	.617	.550	.929	.714	.857	.971	.934	.951

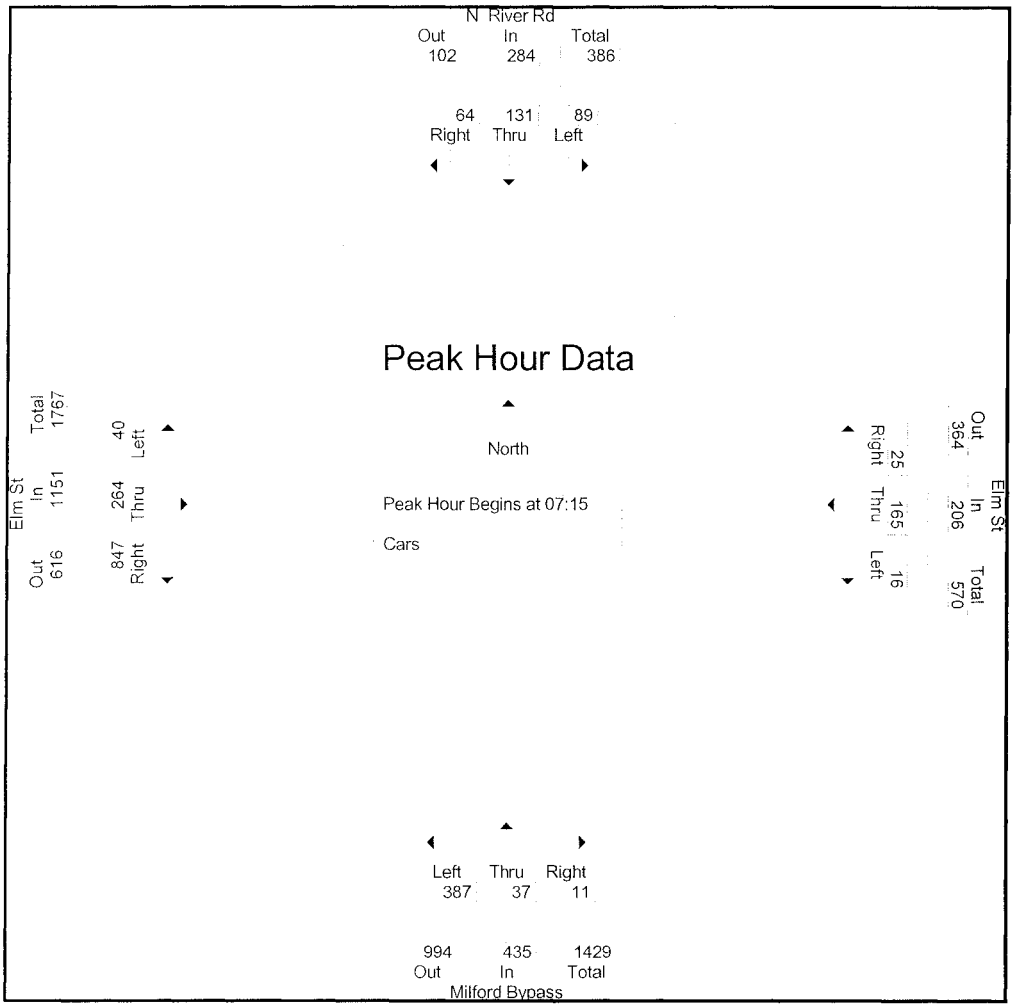

Accurate Counts
978-664-2565

N/S Street : N River Rd/Milford Bypass
E/W Street: Elm Street
City/State : Milford, NH
Weather : Rain

File Name : 51784004
Site Code : 51784004
Start Date : 5/2/2006
Page No : 1

	N. River Rd From North				Elm St From East				Milford Bypass From South				Elm St From West				
Start Time	Left	Thru	Right	App. Total	Left	Thru	Right	App. Total	Left	Thru	Right	App. Total	Left	Thru	Right	App. Total	Int. Total
Peak Hour Analysis From 07:00 to 08:45 - Peak 1 of 1																	
Peak Hour for Entire Intersection Begins at 08:00																	
08:00	0	0	0	0	1	3	0	4	13	1	1	15	**1**	**5**	12	18	37
08:15	0	0	**2**	**2**	1	2	0	3	11	0	**3**	14	0	2	14	16	35
08:30	0	**1**	1	2	**2**	4	0	**6**	**22**	**2**	1	**25**	0	3	7	10	43
08:45	0	1	1	2	0	**5**	**1**	6	18	0	1	19	0	4	**17**	**21**	**48**
Total Volume	0	2	4	6	4	14	1	19	64	3	6	73	1	14	50	65	163
% App. Total	0	33.3	66.7		21.1	73.7	5.3		87.7	4.1	8.2		1.5	21.5	76.9		
PHF	.000	.500	.500	.750	.500	.700	.250	.792	.727	.375	.500	.730	.250	.700	.735	.774	.849

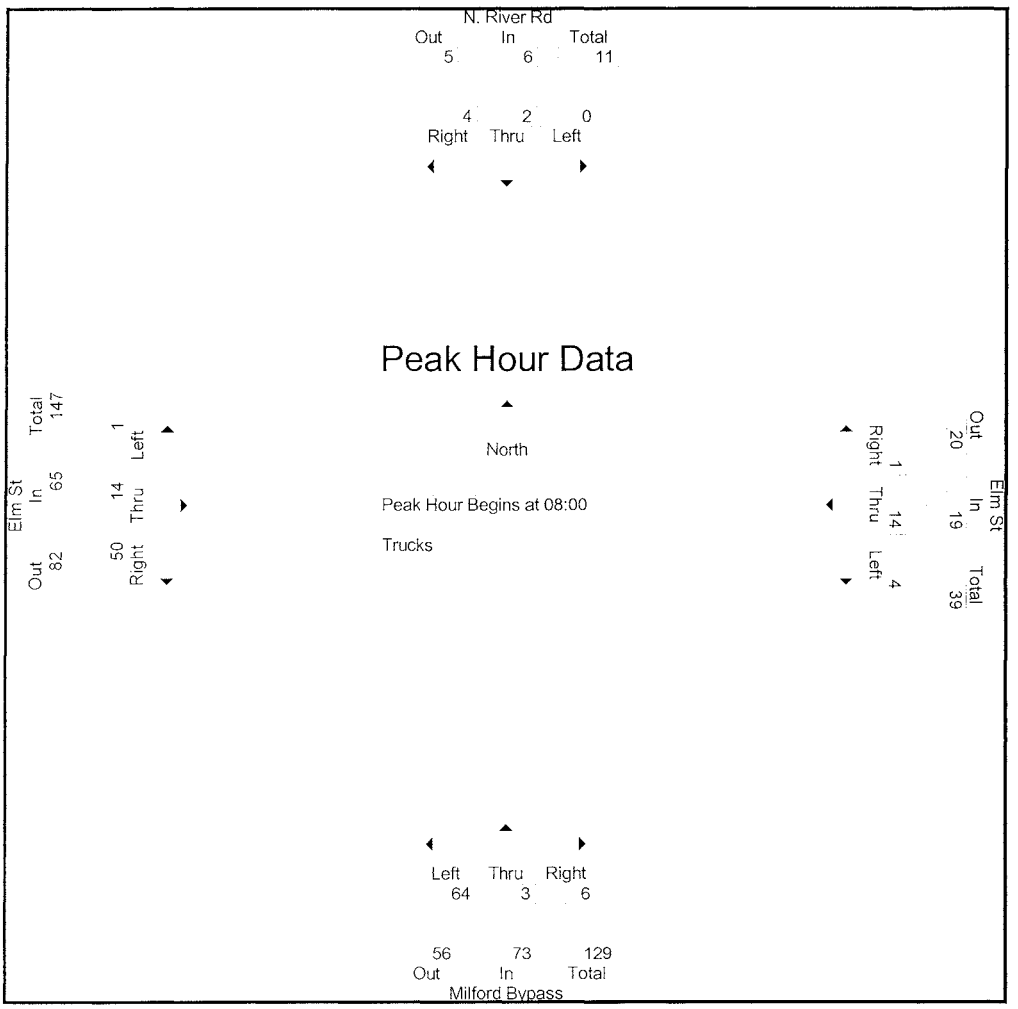

Accurate Counts
978-664-2565

N/S Street : N River Rd/Milford Bypass
E/W Street: Elm Street
City/State : Milford, NH
Weather : Rain

File Name : 51784004
Site Code : 51784004
Start Date : 5/2/2006
Page No : 1

Groups Printed- Cars - Trucks

	N. River Rd From North			Elm St From East			Milford Bypass From South			Elm St From West			
Start Time	Left	Thru	Right	Left	Thru	Right	Left	Thru	Right	Left	Thru	Right	Int. Total
16:00	12	15	13	11	59	26	179	26	3	15	43	131	533
16:15	17	24	11	6	78	27	189	28	10	16	49	155	610
16:30	11	22	7	13	82	18	168	32	5	10	58	116	542
16:45	17	21	16	11	54	22	192	30	8	15	42	114	542
Total	57	82	47	41	273	93	728	116	26	56	192	516	2227
17:00	8	12	3	12	85	21	209	32	3	11	45	159	600
17:15	6	12	11	10	84	23	233	38	4	16	59	148	644
17:30	7	21	14	4	63	22	204	20	5	10	40	116	526
17:45	9	20	18	6	54	12	229	39	11	8	50	111	567
Total	30	65	46	32	286	78	875	129	23	45	194	534	2337
Grand Total	87	147	93	73	559	171	1603	245	49	101	386	1050	4564
Apprch %	26.6	45	28.4	9.1	69.6	21.3	84.5	12.9	2.6	6.6	25.1	68.3	
Total %	1.9	3.2	2	1.6	12.2	3.7	35.1	5.4	1.1	2.2	8.5	23	
Cars	86	142	91	65	552	169	1565	241	43	101	373	1009	4437
% Cars	98.9	96.6	97.8	89	98.7	98.8	97.6	98.4	87.8	100	96.6	96.1	97.2
Trucks	1	5	2	8	7	2	38	4	6	0	13	41	127
% Trucks	1.1	3.4	2.2	11	1.3	1.2	2.4	1.6	12.2	0	3.4	3.9	2.8

	N. River Rd From North				Elm St From East				Milford Bypass From South				Elm St From West				
Start Time	Left	Thru	Right	App. Total	Left	Thru	Right	App. Total	Left	Thru	Right	App. Total	Left	Thru	Right	App. Total	Int. Total
Peak Hour Analysis From 16:00 to 17:45 - Peak 1 of 1																	
Peak Hour for Entire Intersection Begins at 17:00																	
17:00	8	12	3	23	**12**	**85**	21	**118**	209	32	3	244	11	45	**159**	215	600
17:15	6	12	11	29	10	84	**23**	117	**233**	38	4	275	**16**	**59**	148	**223**	**644**
17:30	7	**21**	14	42	4	63	22	89	204	20	5	229	10	40	116	166	526
17:45	**9**	20	**18**	**47**	6	54	12	72	229	**39**	**11**	**279**	8	50	111	169	567
Total Volume	30	65	46	141	32	286	78	396	875	129	23	1027	45	194	534	773	2337
% App. Total	21.3	46.1	32.6		8.1	72.2	19.7		85.2	12.6	2.2		5.8	25.1	69.1		
PHF	.833	.774	.639	.750	.667	.841	.848	.839	.939	.827	.523	.920	.703	.822	.840	.867	.907

Peak Hour Analysis From 16:00 to 17:45 - Peak 1 of 1
Peak Hour for Each Approach Begins at:

	16:00				16:30				17:00				16:30			
+0 mins.	12	15	13	40	**13**	82	18	113	209	32	3	244	10	58	116	184
+15 mins.	**17**	**24**	11	52	11	54	22	87	**233**	38	4	275	15	42	114	171
+30 mins.	11	22	7	40	12	**85**	21	**118**	204	20	5	229	11	45	**159**	215
+45 mins.	17	21	**16**	**54**	10	84	**23**	117	229	**39**	**11**	**279**	**16**	**59**	148	**223**
Total Volume	57	82	47	186	46	305	84	435	875	129	23	1027	52	204	537	793
% App. Total	30.6	44.1	25.3		10.6	70.1	19.3		85.2	12.6	2.2		6.6	25.7	67.7	
PHF	.838	.854	.734	.861	.885	.897	.913	.922	.939	.827	.523	.920	.813	.864	.844	.889

Accurate Counts
978-664-2565

N/S Street : N River Rd/Milford Bypass
E/W Street: Elm Street
City/State : Milford, NH
Weather : Rain

File Name : 51784004
Site Code : 51784004
Start Date : 5/2/2006
Page No : 1

Groups Printed- Cars

	N. River Rd From North			Elm St From East			Milford Bypass From South			Elm St From West			
Start Time	Left	Thru	Right	Left	Thru	Right	Left	Thru	Right	Left	Thru	Right	Int. Total
16:00	12	14	13	11	58	26	170	25	3	15	39	125	511
16:15	16	23	11	4	75	25	183	28	9	16	46	149	585
16:30	11	21	6	13	82	18	161	32	4	10	57	111	526
16:45	17	20	16	9	54	22	187	28	6	15	42	108	524
Total	56	78	46	37	269	91	701	113	22	56	184	493	2146
17:00	8	12	3	11	83	21	209	32	2	11	43	154	589
17:15	6	12	10	9	84	23	227	38	4	16	57	144	630
17:30	7	20	14	3	63	22	201	20	5	10	39	110	514
17:45	9	20	18	5	53	12	227	38	10	8	50	108	558
Total	30	64	45	28	283	78	864	128	21	45	189	516	2291
Grand Total	86	142	91	65	552	169	1565	241	43	101	373	1009	4437
Apprch %	27	44.5	28.5	8.3	70.2	21.5	84.6	13	2.3	6.8	25.2	68	
Total %	1.9	3.2	2.1	1.5	12.4	3.8	35.3	5.4	1	2.3	8.4	22.7	

	N. River Rd From North				Elm St From East				Milford Bypass From South				Elm St From West				
Start Time	Left	Thru	Right	App. Total	Left	Thru	Right	App. Total	Left	Thru	Right	App. Total	Left	Thru	Right	App. Total	Int. Total
Peak Hour Analysis From 16:00 to 17:45 - Peak 1 of 1																	
Peak Hour for Entire Intersection Begins at 17:00																	
17:00	8	12	3	23	**11**	83	21	115	209	32	2	243	11	43	**154**	208	589
17:15	6	12	10	28	9	**84**	**23**	**116**	**227**	**38**	4	269	**16**	**57**	144	**217**	**630**
17:30	7	**20**	14	41	3	63	22	88	201	20	5	226	10	39	110	159	514
17:45	**9**	20	**18**	**47**	5	53	12	70	227	38	**10**	**275**	8	50	108	166	558
Total Volume	30	64	45	139	28	283	78	389	864	128	21	1013	45	189	516	750	2291
% App. Total	21.6	46	32.4		7.2	72.8	20.1		85.3	12.6	2.1		6	25.2	68.8		
PHF	.833	.800	.625	.739	.636	.842	.848	.838	.952	.842	.525	.921	.703	.829	.838	.864	.909

Peak Hour Analysis From 16:00 to 17:45 - Peak 1 of 1
Peak Hour for Each Approach Begins at:

	16:00				16:30				17:00				16:30				
+0 mins.	12	14	13	39	**13**	82	18	113	209	32	2	243	10	**57**	111	178	
+15 mins.	16	**23**	11	50	9	54	22	85	**227**	**38**	4	269	15	42	108	165	
+30 mins.	11	21	6	38	11	83	21	115	201	20	5	226	11	43	**154**	208	
+45 mins.	**17**	20	**16**	**53**	9	**84**	**23**	**116**	227	38	**10**	**275**	**16**	57	144	**217**	
Total Volume	56	78	46	180	42	303	84	429	864	128	21	1013	52	199	517	768	
% App. Total	31.1	43.3	25.6		9.8	70.6	19.6		85.3	12.6	2.1		6.8	25.9	67.3		
PHF	.824	.848	.719	.849	.808	.902	.913	.925	.952	.842	.525	.921	.813	.873	.839	.885	

Accurate Counts
978-664-2565

N/S Street : N River Rd/Milford Bypass
E/W Street: Elm Street
City/State : Milford, NH
Weather : Rain

File Name : 51784004
Site Code : 51784004
Start Date : 5/2/2006
Page No : 1

Groups Printed- Trucks

	N. River Rd From North			Elm St From East			Milford Bypass From South			Elm St From West			
Start Time	Left	Thru	Right	Left	Thru	Right	Left	Thru	Right	Left	Thru	Right	Int. Total
16:00	0	1	0	0	1	0	9	1	0	0	4	6	22
16:15	1	1	0	2	3	2	6	0	1	0	3	6	25
16:30	0	1	1	0	0	0	7	0	1	0	1	5	16
16:45	0	1	0	2	0	0	5	2	2	0	0	6	18
Total	1	4	1	4	4	2	27	3	4	0	8	23	81
17:00	0	0	0	1	2	0	0	0	1	0	2	5	11
17:15	0	0	1	1	0	0	6	0	0	0	2	4	14
17:30	0	1	0	1	0	0	3	0	0	0	1	6	12
17:45	0	0	0	1	1	0	2	1	1	0	0	3	9
Total	0	1	1	4	3	0	11	1	2	0	5	18	46
Grand Total	1	5	2	8	7	2	38	4	6	0	13	41	127
Apprch %	12.5	62.5	25	47.1	41.2	11.8	79.2	8.3	12.5	0	24.1	75.9	
Total %	0.8	3.9	1.6	6.3	5.5	1.6	29.9	3.1	4.7	0	10.2	32.3	

	N. River Rd From North				Elm St From East				Milford Bypass From South				Elm St From West				
Start Time	Left	Thru	Right	App. Total	Left	Thru	Right	App. Total	Left	Thru	Right	App. Total	Left	Thru	Right	App. Total	Int. Total
Peak Hour Analysis From 16:00 to 17:45 - Peak 1 of 1																	
Peak Hour for Entire Intersection Begins at 16:00																	
16:00	0	**1**	0	1	0	1	0	1	**9**	1	0	**10**	0	**4**	**6**	**10**	22
16:15	**1**	1	0	**2**	**2**	**3**	**2**	**7**	6	0	1	7	0	3	6	9	**25**
16:30	0	1	**1**	2	0	0	0	0	7	0	1	8	0	1	5	6	16
16:45	0	1	0	1	2	0	0	2	5	**2**	**2**	9	0	0	6	6	18
Total Volume	1	4	1	6	4	4	2	10	27	3	4	34	0	8	23	31	81
% App. Total	16.7	66.7	16.7		40	40	20		79.4	8.8	11.8		0	25.8	74.2		
PHF	.250	1.000	.250	.750	.500	.333	.250	.357	.750	.375	.500	.850	.000	.500	.958	.775	.810

Peak Hour Analysis From 16:00 to 17:45 - Peak 1 of 1
Peak Hour for Each Approach Begins at:

	16:00				16:15				16:00				16:00			
+0 mins.	0	**1**	0	1	**2**	**3**	**2**	**7**	**9**	1	0	**10**	0	**4**	**6**	**10**
+15 mins.	**1**	1	0	**2**	0	0	0	0	6	0	1	7	0	3	6	9
+30 mins.	0	1	**1**	2	2	0	0	2	7	0	1	8	0	1	5	6
+45 mins.	0	1	0	1	1	2	0	3	5	**2**	**2**	9	0	0	6	6
Total Volume	1	4	1	6	5	5	2	12	27	3	4	34	0	8	23	31
% App. Total	16.7	66.7	16.7		41.7	41.7	16.7		79.4	8.8	11.8		0	25.8	74.2	
PHF	.250	1.000	.250	.750	.625	.417	.250	.429	.750	.375	.500	.850	.000	.500	.958	.775

Accurate Counts
978-664-2565

N/S Street : N River Rd/Milford Bypass
E/W Street: Elm Street
City/State : Milford, NH
Weather : Rain

File Name : 51784004
Site Code : 51784004
Start Date : 5/2/2006
Page No : 1

	N. River Rd From North				Elm St From East				Milford Bypass From South				Elm St From West				
Start Time	Left	Thru	Right	App. Total	Left	Thru	Right	App. Total	Left	Thru	Right	App. Total	Left	Thru	Right	App. Total	Int. Total
Peak Hour Analysis From 16:00 to 17:45 - Peak 1 of 1																	
Peak Hour for Entire Intersection Begins at 17:00																	
17:00	8	12	3	23	**12**	**85**	21	**118**	209	32	3	244	11	45	**159**	215	600
17:15	6	12	11	29	10	84	**23**	117	**233**	38	4	275	**16**	**59**	148	**223**	**644**
17:30	7	**21**	14	42	4	63	22	89	204	20	5	229	10	40	116	166	526
17:45	**9**	20	**18**	**47**	6	54	12	72	229	**39**	**11**	**279**	8	50	111	169	567
Total Volume	30	65	46	141	32	286	78	396	875	129	23	1027	45	194	534	773	2337
% App. Total	21.3	46.1	32.6		8.1	72.2	19.7		85.2	12.6	2.2		5.8	25.1	69.1		
PHF	.833	.774	.639	.750	.667	.841	.848	.839	.939	.827	.523	.920	.703	.822	.840	.867	.907

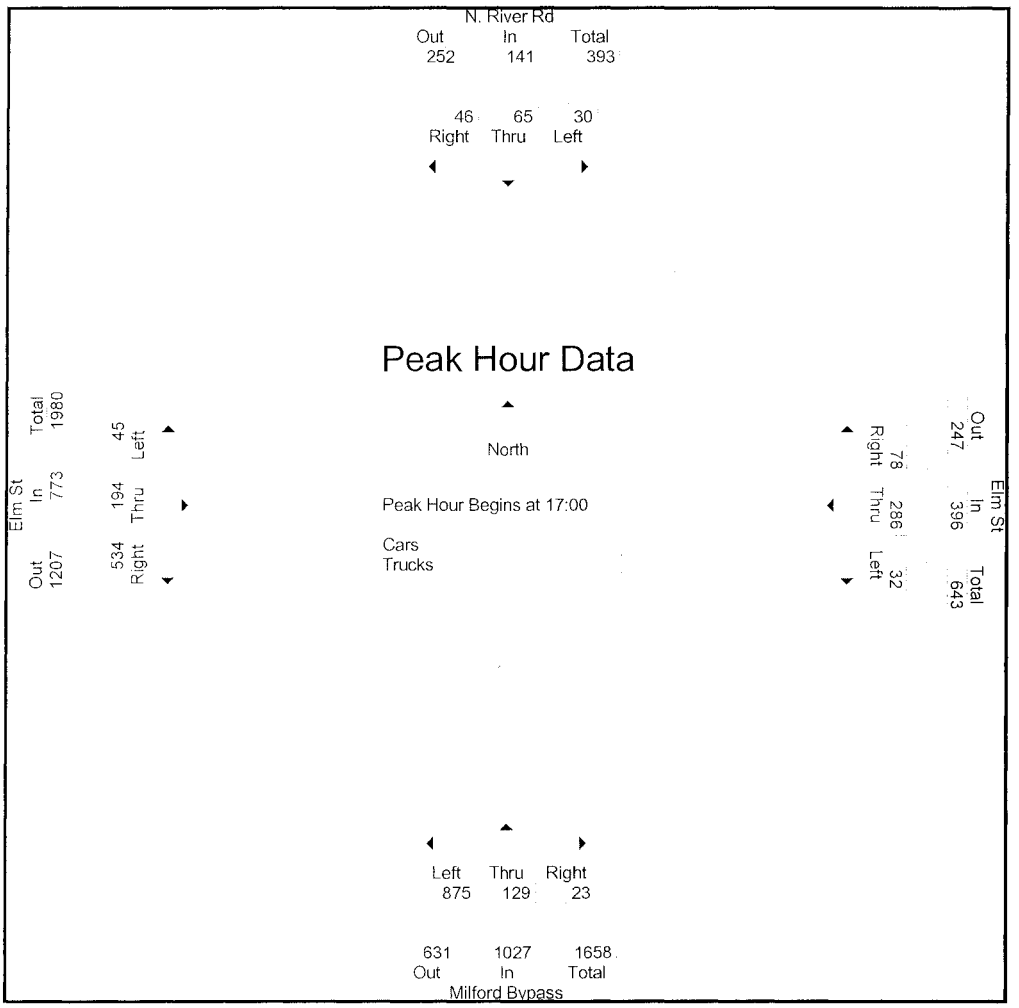

Accurate Counts
978-664-2565

N/S Street : N River Rd/Milford Bypass
E/W Street: Elm Street
City/State : Milford, NH
Weather : Rain

File Name : 51784004
Site Code : 51784004
Start Date : 5/2/2006
Page No : 1

	N. River Rd From North				Elm St From East				Milford Bypass From South				Elm St From West				
Start Time	Left	Thru	Right	App. Total	Left	Thru	Right	App. Total	Left	Thru	Right	App. Total	Left	Thru	Right	App. Total	Int. Total
Peak Hour Analysis From 16:00 to 17:45 - Peak 1 of 1																	
Peak Hour for Entire Intersection Begins at 17:00																	
17:00	8	12	3	23	**11**	83	21	115	209	32	2	243	11	43	**154**	208	589
17:15	6	12	10	28	9	**84**	**23**	**116**	**227**	**38**	4	269	**16**	**57**	144	**217**	**630**
17:30	7	**20**	14	41	3	63	22	88	201	20	5	226	10	39	110	159	514
17:45	**9**	20	**18**	**47**	5	53	12	70	227	38	**10**	**275**	8	50	108	166	558
Total Volume	30	64	45	139	28	283	78	389	864	128	21	1013	45	189	516	750	2291
% App. Total	21.6	46	32.4		7.2	72.8	20.1		85.3	12.6	2.1		6	25.2	68.8		
PHF	.833	800	.625	.739	.636	.842	.848	.838	.952	.842	.525	.921	.703	.829	.838	.864	.909

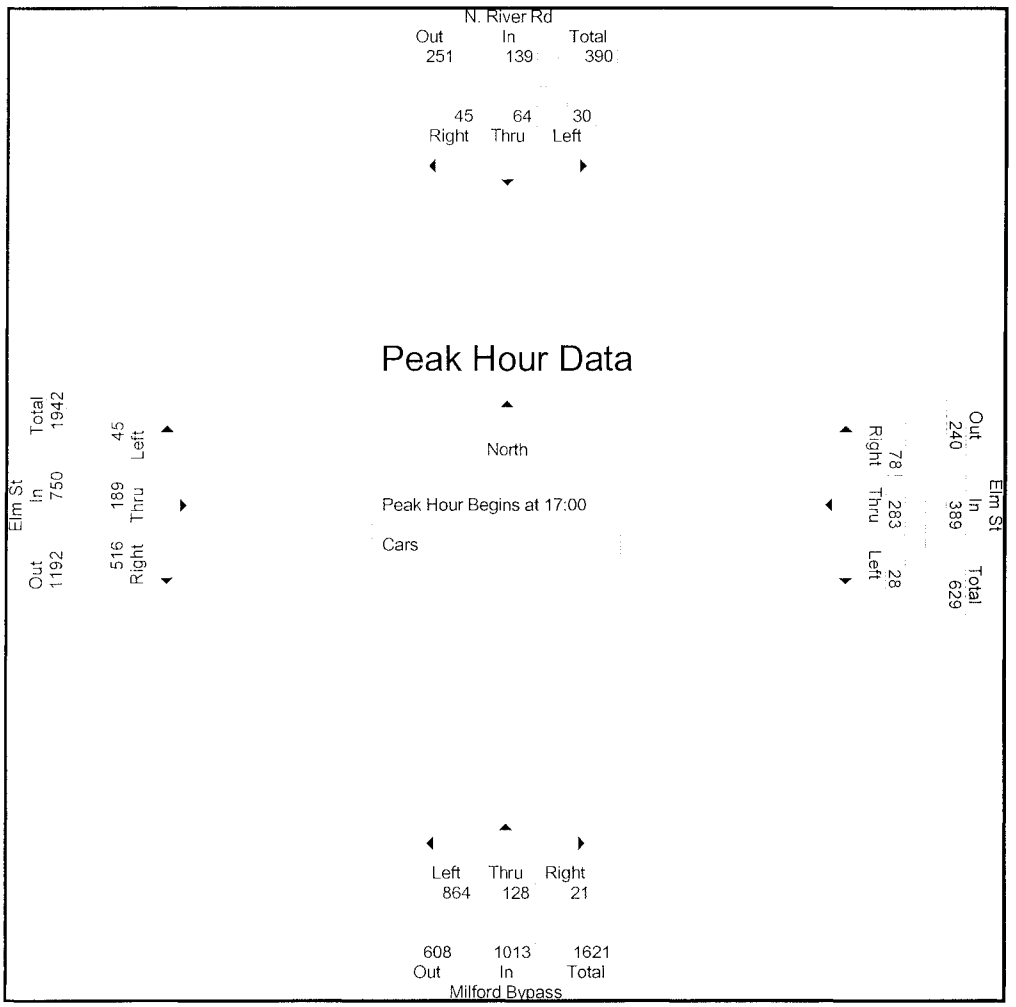

Accurate Counts
978-664-2565

N/S Street : N River Rd/Milford Bypass
E/W Street: Elm Street
City/State : Milford, NH
Weather : Rain

File Name : 51784004
Site Code : 51784004
Start Date : 5/2/2006
Page No : 1

	N. River Rd From North				Elm St From East				Milford Bypass From South				Elm St From West				
Start Time	Left	Thru	Right	App. Total	Left	Thru	Right	App. Total	Left	Thru	Right	App. Total	Left	Thru	Right	App. Total	Int. Total
Peak Hour Analysis From 16:00 to 17:45 - Peak 1 of 1																	
Peak Hour for Entire Intersection Begins at 16:00																	
16:00	0	**1**	0	1	0	1	0	1	**9**	1	0	**10**	0	**4**	**6**	**10**	22
16:15	**1**	1	0	**2**	**2**	**3**	**2**	**7**	6	0	1	7	0	3	6	9	**25**
16:30	0	1	**1**	2	0	0	0	0	7	0	1	8	0	1	5	6	16
16:45	0	1	0	1	2	0	0	2	5	**2**	**2**	9	0	0	6	6	18
Total Volume	1	4	1	6	4	4	2	10	27	3	4	34	0	8	23	31	81
% App. Total	16.7	66.7	16.7		40	40	20		79.4	8.8	11.8		0	25.8	74.2		
PHF	.250	1.000	.250	.750	.500	.333	.250	.357	.750	.375	.500	.850	.000	.500	.958	.775	.810

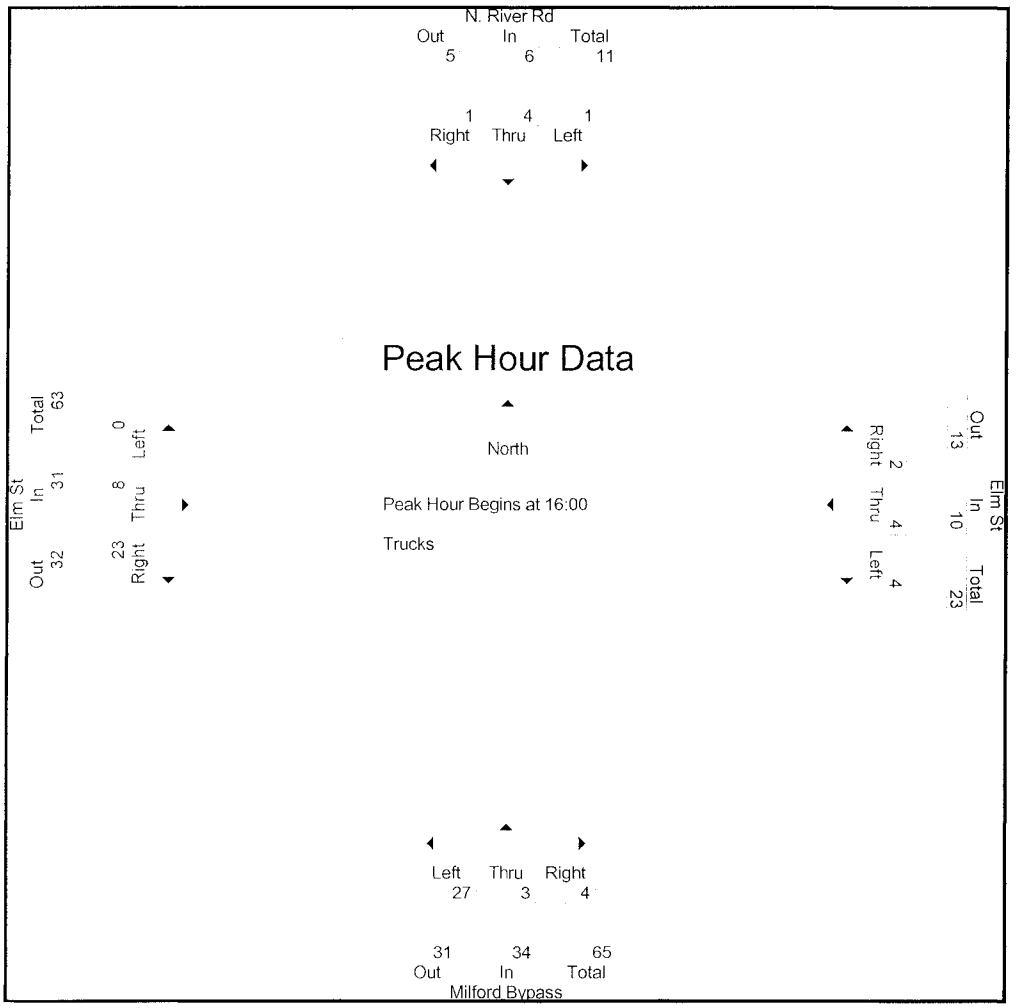

Accurate Counts
978-664-2565

N/S Street : N River Rd/Milford Bypass
E/W Street: Elm Street
City/State : Milford, NH
Weather : Rain

File Name : 517840A4
Site Code : 51784004
Start Date : 5/13/2006
Page No : 1

Groups Printed- Cars - Trucks

	N. River Rd From North			Elm St From East			Milford Bypass From South			Elm St From West			
Start Time	Left	Thru	Right	Left	Thru	Right	Left	Thru	Right	Left	Thru	Right	Int. Total
10:00	12	22	5	6	47	14	70	36	3	16	68	128	427
10:15	12	27	7	13	47	12	104	17	5	15	64	160	483
10:30	8	18	4	5	61	21	114	24	4	18	64	149	490
10:45	13	22	9	5	49	21	105	29	3	12	65	145	478
Total	45	89	25	29	204	68	393	106	15	61	261	582	1878
11:00	19	40	10	8	67	22	128	41	3	12	67	182	599
11:15	10	33	14	7	61	18	124	21	9	10	66	177	550
11:30	11	29	12	7	46	12	130	23	8	10	68	153	509
11:45	10	22	15	13	56	18	134	22	8	9	77	152	536
Total	50	124	51	35	230	70	516	107	28	41	278	664	2194
12:00	11	15	18	3	60	18	144	23	6	7	62	159	526
12:15	12	25	10	6	41	14	112	21	8	11	39	151	450
12:30	12	19	9	6	43	21	141	25	1	9	65	155	506
12:45	13	19	10	10	61	19	121	20	7	10	75	151	516
Total	48	78	47	25	205	72	518	89	22	37	241	616	1998
13:00	12	18	11	10	58	19	108	23	6	14	57	165	501
13:15	15	25	7	11	64	13	99	31	6	1	66	135	473
13:30	7	21	14	4	63	22	204	20	5	10	40	116	526
13:45	9	20	18	6	54	12	229	39	11	8	50	111	567
Total	43	84	50	31	239	66	640	113	28	33	213	527	2067
Grand Total	186	375	173	120	878	276	2067	415	93	172	993	2389	8137
Apprch %	25.3	51.1	23.6	9.4	68.9	21.7	80.3	16.1	3.6	4.8	27.9	67.2	
Total %	2.3	4.6	2.1	1.5	10.8	3.4	25.4	5.1	1.1	2.1	12.2	29.4	
Cars	184	372	167	118	874	274	2024	402	91	167	985	2341	7999
% Cars	98.9	99.2	96.5	98.3	99.5	99.3	97.9	96.9	97.8	97.1	99.2	98	98.3
Trucks	2	3	6	2	4	2	43	13	2	5	8	48	138
% Trucks	1.1	0.8	3.5	1.7	0.5	0.7	2.1	3.1	2.2	2.9	0.8	2	1.7

	N. River Rd From North				Elm St From East				Milford Bypass From South				Elm St From West				
Start Time	Left	Thru	Right	App. Total	Left	Thru	Right	App. Total	Left	Thru	Right	App. Total	Left	Thru	Right	App. Total	Int. Total
Peak Hour Analysis From 10:00 to 13:45 - Peak 1 of 1																	
Peak Hour for Entire Intersection Begins at 11:00																	
11:00	**19**	**40**	10	**69**	8	**67**	**22**	**97**	128	**41**	3	**172**	**12**	67	**182**	**261**	**599**
11:15	10	33	14	57	7	61	18	86	124	21	**9**	154	10	66	177	253	550
11:30	11	29	12	52	7	46	12	65	130	23	8	161	10	68	153	231	509
11:45	10	22	**15**	47	**13**	56	18	87	**134**	22	8	164	9	**77**	152	238	536
Total Volume	50	124	51	225	35	230	70	335	516	107	28	651	41	278	664	983	2194
% App. Total	22.2	55.1	22.7		10.4	68.7	20.9		79.3	16.4	4.3		4.2	28.3	67.5		
PHF	.658	.775	.850	.815	.673	.858	.795	.863	.963	.652	.778	.946	.854	.903	.912	.942	.916

Peak Hour Analysis From 10:00 to 13:45 - Peak 1 of 1
Peak Hour for Each Approach Begins at:

	11:00				12:45				13:00				11:00			
+0 mins.	**19**	**40**	10	**69**	10	61	19	**90**	108	23	6	137	**12**	67	**182**	**261**
+15 mins.	10	33	14	57	10	58	19	87	99	31	6	136	10	66	177	253
+30 mins.	11	29	12	52	**11**	**64**	13	88	204	20	5	229	10	68	153	231
+45 mins.	10	22	**15**	47	4	63	**22**	89	**229**	**39**	**11**	**279**	9	**77**	152	238
Total Volume	50	124	51	225	35	246	73	354	640	113	28	781	41	278	664	983
% App. Total	22.2	55.1	22.7		9.9	69.5	20.6		81.9	14.5	3.6		4.2	28.3	67.5	
PHF	.658	.775	.850	.815	.795	.961	.830	.983	.699	.724	.636	.700	.854	.903	.912	.942

Accurate Counts
978-664-2565

N/S Street : N River Rd/Milford Bypass
E/W Street: Elm Street
City/State : Milford, NH
Weather : Rain

File Name : 517840A4
Site Code : 51784004
Start Date : 5/13/2006
Page No : 1

Groups Printed- Cars

	N. River Rd From North			Elm St From East			Milford Bypass From South			Elm St From West			
Start Time	Left	Thru	Right	Left	Thru	Right	Left	Thru	Right	Left	Thru	Right	Int. Total
10:00	12	22	5	6	47	14	68	35	3	15	68	122	417
10:15	12	26	7	13	47	11	100	16	5	14	63	155	469
10:30	7	18	4	5	61	21	112	23	4	18	64	146	483
10:45	13	22	6	5	49	21	102	28	3	12	64	141	466
Total	44	88	22	29	204	67	382	102	15	59	259	564	1835
11:00	18	39	10	8	67	22	128	39	3	11	64	178	587
11:15	10	33	13	7	61	18	120	21	9	10	66	175	543
11:30	11	29	12	7	46	12	127	23	8	9	68	152	504
11:45	10	22	15	13	56	18	132	19	8	9	77	149	528
Total	49	123	50	35	230	70	507	102	28	39	275	654	2162
12:00	11	15	18	3	60	18	141	22	6	7	62	158	521
12:15	12	25	10	6	41	14	112	21	8	11	39	150	449
12:30	12	19	8	6	43	20	138	25	1	9	65	154	500
12:45	13	19	9	10	60	19	117	20	6	9	74	148	504
Total	48	78	45	25	204	71	508	88	21	36	240	610	1974
13:00	12	18	11	10	57	19	104	23	6	14	57	164	495
13:15	15	25	7	11	63	13	95	29	6	1	65	131	461
13:30	7	20	14	3	63	22	201	20	5	10	39	110	514
13:45	9	20	18	5	53	12	227	38	10	8	50	108	558
Total	43	83	50	29	236	66	627	110	27	33	211	513	2028
Grand Total	184	372	167	118	874	274	2024	402	91	167	985	2341	7999
Apprch %	25.4	51.5	23.1	9.3	69	21.6	80.4	16	3.6	4.8	28.2	67	
Total %	2.3	4.7	2.1	1.5	10.9	3.4	25.3	5	1.1	2.1	12.3	29.3	

	N. River Rd From North				Elm St From East				Milford Bypass From South				Elm St From West				
Start Time	Left	Thru	Right	App. Total	Left	Thru	Right	App. Total	Left	Thru	Right	App. Total	Left	Thru	Right	App. Total	Int. Total
Peak Hour Analysis From 10:00 to 13:45 - Peak 1 of 1																	
Peak Hour for Entire Intersection Begins at 11:00																	
11:00	**18**	**39**	10	**67**	8	**67**	**22**	**97**	128	**39**	3	**170**	**11**	64	**178**	**253**	**587**
11:15	10	33	13	56	7	61	18	86	120	21	**9**	150	10	66	175	251	543
11:30	11	29	12	52	7	46	12	65	127	23	8	158	9	68	152	229	504
11:45	10	22	**15**	47	**13**	56	18	87	**132**	19	8	159	9	**77**	149	235	528
Total Volume	49	123	50	222	35	230	70	335	507	102	28	637	39	275	654	968	2162
% App. Total	22.1	55.4	22.5		10.4	68.7	20.9		79.6	16	4.4		4	28.4	67.6		
PHF	.681	.788	.833	.828	.673	.858	.795	.863	.960	.654	.778	.937	.886	.893	.919	.957	.921

Peak Hour Analysis From 10:00 to 13:45 - Peak 1 of 1
Peak Hour for Each Approach Begins at

	11:00				12:45				13:00				11:00			
+0 mins.	**18**	**39**	10	**67**	10	60	19	**89**	104	23	6	133	**11**	64	**178**	**253**
+15 mins.	10	33	13	56	10	57	19	86	95	29	6	130	10	66	175	251
+30 mins.	11	29	12	52	**11**	**63**	13	87	201	20	5	226	9	68	152	229
+45 mins.	10	22	**15**	47	3	63	**22**	88	**227**	**38**	**10**	**275**	9	**77**	149	235
Total Volume	49	123	50	222	34	243	73	350	627	110	27	764	39	275	654	968
% App. Total	22.1	55.4	22.5		9.7	69.4	20.9		82.1	14.4	3.5		4	28.4	67.6	
PHF	.681	.788	.833	.828	.773	.964	.830	.983	.691	.724	.675	.695	.886	.893	.919	.957

Accurate Counts
978-664-2565

N/S Street : N River Rd/Milford Bypass
E/W Street: Elm Street
City/State : Milford, NH
Weather : Rain

File Name : 517840A4
Site Code : 51784004
Start Date : 5/13/2006
Page No : 1

Groups Printed- Trucks

	N. River Rd From North			Elm St From East			Milford Bypass From South			Elm St From West			
Start Time	Left	Thru	Right	Left	Thru	Right	Left	Thru	Right	Left	Thru	Right	Int. Total
10:00	0	0	0	0	0	0	2	1	0	1	0	6	10
10:15	0	1	0	0	0	1	4	1	0	1	1	5	14
10:30	1	0	0	0	0	0	2	1	0	0	0	3	7
10:45	0	0	3	0	0	0	3	1	0	0	1	4	12
Total	1	1	3	0	0	1	11	4	0	2	2	18	43
11:00	1	1	0	0	0	0	0	2	0	1	3	4	12
11:15	0	0	1	0	0	0	4	0	0	0	0	2	7
11:30	0	0	0	0	0	0	3	0	0	1	0	1	5
11:45	0	0	0	0	0	0	2	3	0	0	0	3	8
Total	1	1	1	0	0	0	9	5	0	2	3	10	32
12:00	0	0	0	0	0	0	3	1	0	0	0	1	5
12:15	0	0	0	0	0	0	0	0	0	0	0	1	1
12:30	0	0	1	0	0	1	3	0	0	0	0	1	6
12:45	0	0	1	0	1	0	4	0	1	1	1	3	12
Total	0	0	2	0	1	1	10	1	1	1	1	6	24
13:00	0	0	0	0	1	0	4	0	0	0	0	1	6
13:15	0	0	0	0	1	0	4	2	0	0	1	4	12
13:30	0	1	0	1	0	0	3	0	0	0	1	6	12
13:45	0	0	0	1	1	0	2	1	1	0	0	3	9
Total	0	1	0	2	3	0	13	3	1	0	2	14	39
Grand Total	2	3	6	2	4	2	43	13	2	5	8	48	138
Apprch %	18.2	27.3	54.5	25	50	25	74.1	22.4	3.4	8.2	13.1	78.7	
Total %	1.4	2.2	4.3	1.4	2.9	1.4	31.2	9.4	1.4	3.6	5.8	34.8	

	N. River Rd From North				Elm St From East				Milford Bypass From South				Elm St From West				
Start Time	Left	Thru	Right	App. Total	Left	Thru	Right	App. Total	Left	Thru	Right	App. Total	Left	Thru	Right	App. Total	Int. Total
Peak Hour Analysis From 10:00 to 13:45 - Peak 1 of 1																	
Peak Hour for Entire Intersection Begins at 10:15																	
10:15	0	**1**	0	1	0	0	**1**	**1**	**4**	1	0	**5**	**1**	1	**5**	7	**14**
10:30	**1**	0	0	1	0	0	0	0	2	1	0	3	0	0	3	3	7
10:45	0	0	**3**	**3**	0	0	0	0	3	1	0	4	0	1	4	5	12
11:00	1	1	0	2	0	0	0	0	0	**2**	0	2	1	**3**	4	**8**	12
Total Volume	2	2	3	7	0	0	1	1	9	5	0	14	2	5	16	23	45
% App. Total	28.6	28.6	42.9		0	0	100		64.3	35.7	0		8.7	21.7	69.6		
PHF	.500	.500	.250	.583	.000	.000	.250	.250	.563	.625	.000	.700	.500	.417	.800	.719	.804

Peak Hour Analysis From 10:00 to 13:45 - Peak 1 of 1
Peak Hour for Each Approach Begins at:

	10:15				13:00				12:30				10:15			
+0 mins.	0	**1**	0	1	0	**1**	0	1	3	0	0	3	**1**	1	**5**	7
+15 mins	**1**	0	0	1	0	1	0	1	**4**	0	**1**	5	0	0	3	3
+30 mins.	0	0	**3**	**3**	**1**	0	0	1	4	0	0	4	0	1	4	5
+45 mins.	1	1	0	2	1	1	0	**2**	4	**2**	0	**6**	1	**3**	4	**8**
Total Volume	2	2	3	7	2	3	0	5	15	2	1	18	2	5	16	23
% App. Total	28.6	28.6	42.9		40	60	0		83.3	11.1	5.6		8.7	21.7	69.6	
PHF	.500	.500	.250	.583	.500	.750	.000	.625	.938	.250	.250	.750	.500	.417	.800	.719

Accurate Counts
978-664-2565

N/S Street : N River Rd/Milford Bypass
E/W Street: Elm Street
City/State : Milford, NH
Weather : Rain

File Name : 517840A4
Site Code : 51784004
Start Date : 5/13/2006
Page No : 1

	N. River Rd From North				Elm St From East				Milford Bypass From South				Elm St From West				
Start Time	Left	Thru	Right	App. Total	Left	Thru	Right	App. Total	Left	Thru	Right	App. Total	Left	Thru	Right	App. Total	Int. Total
Peak Hour Analysis From 10:00 to 13:45 - Peak 1 of 1																	
Peak Hour for Entire Intersection Begins at 11:00																	
11:00	**19**	**40**	10	**69**	8	**67**	**22**	**97**	128	**41**	3	**172**	**12**	67	**182**	**261**	**599**
11:15	10	33	14	57	7	61	18	86	124	21	**9**	154	10	66	177	253	550
11:30	11	29	12	52	7	46	12	65	130	23	8	161	10	68	153	231	509
11:45	10	22	**15**	47	**13**	56	18	87	**134**	22	8	164	9	**77**	152	238	536
Total Volume	50	124	51	225	35	230	70	335	516	107	28	651	41	278	664	983	2194
% App. Total	22.2	55.1	22.7		10.4	68.7	20.9		79.3	16.4	4.3		4.2	28.3	67.5		
PHF	.658	.775	.850	.815	.673	.858	.795	.863	.963	.652	.778	.946	.854	.903	.912	.942	.916

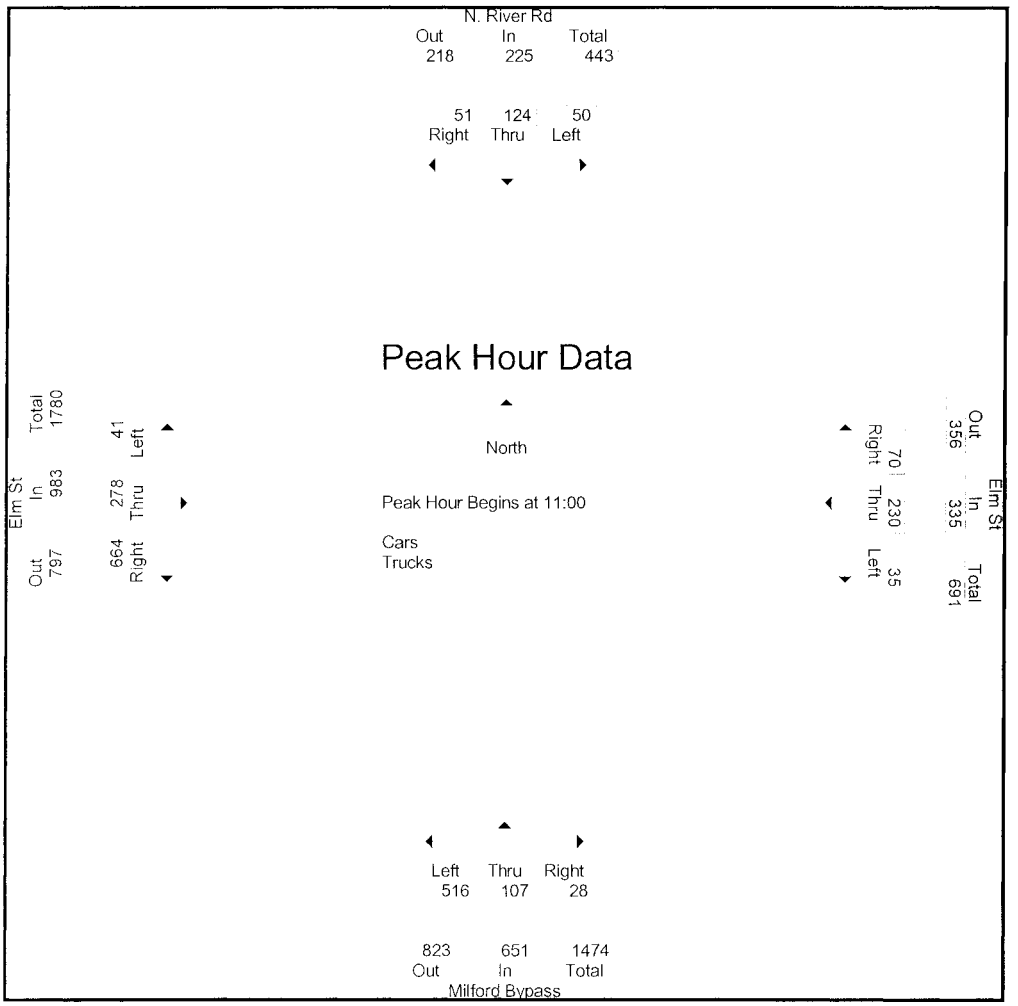

Accurate Counts
978-664-2565

N/S Street : N River Rd/Milford Bypass
E/W Street: Elm Street
City/State : Milford, NH
Weather : Rain

File Name : 517840A4
Site Code : 51784004
Start Date : 5/13/2006
Page No : 1

	N. River Rd From North				Elm St From East				Milford Bypass From South				Elm St From West				
Start Time	Left	Thru	Right	App. Total	Left	Thru	Right	App. Total	Left	Thru	Right	App. Total	Left	Thru	Right	App. Total	Int. Total
Peak Hour Analysis From 10:00 to 13:45 - Peak 1 of 1																	
Peak Hour for Entire Intersection Begins at 11:00																	
11:00	**18**	**39**	10	**67**	8	**67**	**22**	**97**	128	**39**	3	**170**	**11**	64	**178**	**253**	**587**
11:15	10	33	13	56	7	61	18	86	120	21	**9**	150	10	66	175	251	543
11:30	11	29	12	52	7	46	12	65	127	23	8	158	9	68	152	229	504
11:45	10	22	**15**	47	**13**	56	18	87	**132**	19	8	159	9	**77**	149	235	528
Total Volume	49	123	50	222	35	230	70	335	507	102	28	637	39	275	654	968	2162
% App. Total	22.1	55.4	22.5		10.4	68.7	20.9		79.6	16	4.4		4	28.4	67.6		
PHF	.681	.788	.833	.828	.673	.858	.795	.863	.960	.654	.778	.937	.886	.893	.919	.957	.921

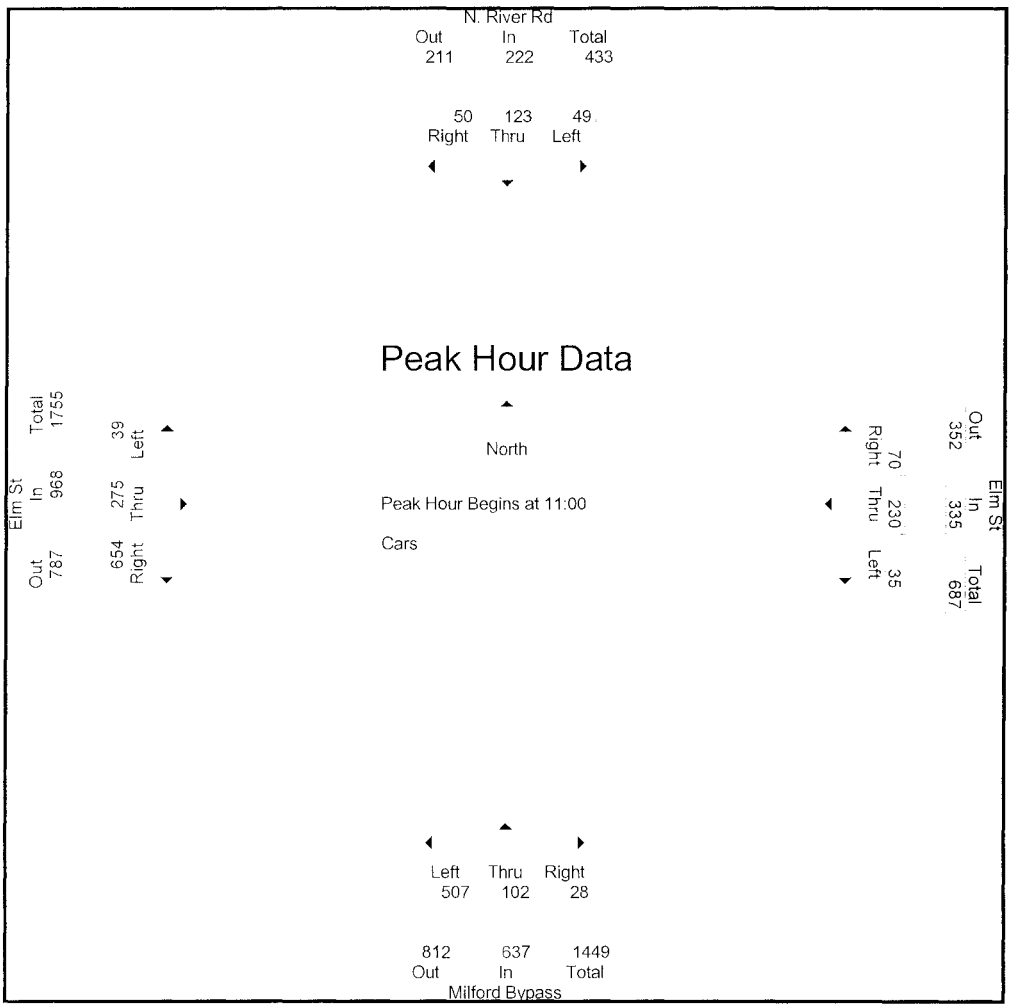

Accurate Counts
978-664-2565

N/S Street : N River Rd/Milford Bypass
E/W Street: Elm Street
City/State : Milford, NH
Weather : Rain

File Name : 517840A4
Site Code : 51784004
Start Date : 5/13/2006
Page No : 1

	N. River Rd From North				Elm St From East				Milford Bypass From South				Elm St From West				
Start Time	Left	Thru	Right	App. Total	Left	Thru	Right	App. Total	Left	Thru	Right	App. Total	Left	Thru	Right	App. Total	Int. Total
Peak Hour Analysis From 10:00 to 13:45 - Peak 1 of 1																	
Peak Hour for Entire Intersection Begins at 10:15																	
10:15	0	**1**	0	1	0	0	**1**	**1**	**4**	1	0	**5**	**1**	1	**5**	7	**14**
10:30	**1**	0	0	1	0	0	0	0	2	1	0	3	0	0	3	3	7
10:45	0	0	**3**	**3**	0	0	0	0	3	1	0	4	0	1	4	5	12
11:00	1	1	0	2	0	0	0	0	0	**2**	0	2	1	**3**	4	**8**	12
Total Volume	2	2	3	7	0	0	1	1	9	5	0	14	2	5	16	23	45
% App. Total	28.6	28.6	42.9		0	0	100		64.3	35.7	0		8.7	21.7	69.6		
PHF	.500	.500	.250	.583	.000	.000	.250	.250	.563	.625	.000	.700	.500	.417	.800	.719	.804

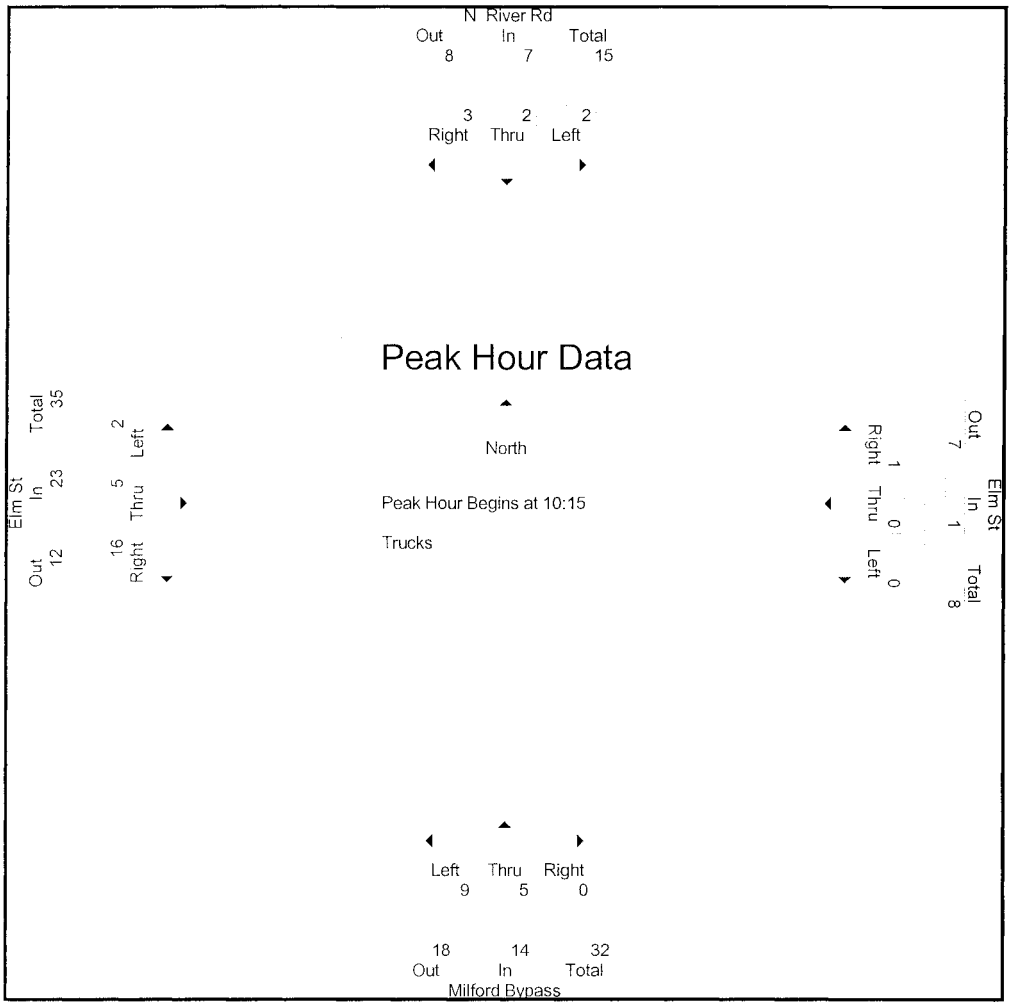

Attachment D-2e

Route 13/Lincoln Street Intersection

Accurate Counts
978-664-2565

N/S Street : Route 13
E/W Street: Lincoln Street
City/State : Milford, NH
Weather : Cloudy

File Name : 51784005
Site Code : 51784005
Start Date : 5/4/2006
Page No : 1

Groups Printed- Cars - Trucks

	Route 13 From North			Parking Lot From East			Route 13 From South			Lincoln St From West			
Start Time	Left	Thru	Right	Left	Thru	Right	Left	Thru	Right	Left	Thru	Right	Int. Total
07:00	0	48	14	0	0	0	9	32	0	16	1	6	126
07:15	1	44	20	0	0	0	20	41	0	27	0	9	162
07:30	0	40	11	0	0	0	9	50	1	30	0	10	151
07:45	0	43	8	0	0	0	7	44	0	25	0	9	136
Total	1	175	53	0	0	0	45	167	1	98	1	34	575
08:00	0	48	12	0	0	0	9	46	0	23	0	10	148
08:15	0	56	7	0	0	1	8	52	1	20	0	5	150
08:30	0	44	2	0	1	0	7	54	0	17	0	10	135
08:45	0	31	8	0	0	0	5	37	0	12	0	8	101
Total	0	179	29	0	1	1	29	189	1	72	0	33	534
Grand Total	1	354	82	0	1	1	74	356	2	170	1	67	1109
Apprch %	0.2	81	18.8	0	50	50	17.1	82.4	0.5	71.4	0.4	28.2	
Total %	0.1	31.9	7.4	0	0.1	0.1	6.7	32.1	0.2	15.3	0.1	6	
Cars	1	324	79	0	1	1	69	329	2	169	1	61	1037
% Cars	100	91.5	96.3	0	100	100	93.2	92.4	100	99.4	100	91	93.5
Trucks	0	30	3	0	0	0	5	27	0	1	0	6	72
% Trucks	0	8.5	3.7	0	0	0	6.8	7.6	0	0.6	0	9	6.5

	Route 13 From North				Parking Lot From East				Route 13 From South				Lincoln St From West				
Start Time	Left	Thru	Right	App. Total	Left	Thru	Right	App. Total	Left	Thru	Right	App. Total	Left	Thru	Right	App. Total	Int. Total
Peak Hour Analysis From 07:00 to 08:45 - Peak 1 of 1																	
Peak Hour for Entire Intersection Begins at 07:15																	
07:15	**1**	44	**20**	**65**	0	0	0	0	**20**	41	0	**61**	27	0	9	36	**162**
07:30	0	40	11	51	0	0	0	0	9	**50**	**1**	60	**30**	0	**10**	**40**	151
07:45	0	43	8	51	0	0	0	0	7	44	0	51	25	0	9	34	136
08:00	0	**48**	12	60	0	0	0	0	9	46	0	55	23	0	10	33	148
Total Volume	1	175	51	227	0	0	0	0	45	181	1	227	105	0	38	143	597
% App. Total	0.4	77.1	22.5		0	0	0		19.8	79.7	0.4		73.4	0	26.6		
PHF	.250	.911	.638	.873	.000	000	.000	.000	.563	.905	.250	.930	.875	.000	.950	.894	.921

Peak Hour Analysis From 07:00 to 08:45 - Peak 1 of 1
Peak Hour for Each Approach Begins at:

	07:00				07:45				07:45				07:15				
+0 mins.	0	**48**	14	62	0	0	0	0	7	44	0	51	27	0	9	36	
+15 mins.	**1**	44	**20**	**65**	0	0	0	0	**9**	46	0	55	**30**	0	**10**	**40**	
+30 mins.	0	40	11	51	0	0	**1**	**1**	8	52	**1**	**61**	25	0	9	34	
+45 mins.	0	43	8	51	0	**1**	0	1	7	**54**	0	61	23	0	10	33	
Total Volume	1	175	53	229	0	1	1	2	31	196	1	228	105	0	38	143	
% App. Total	0.4	76.4	23.1		0	50	50		13.6	86	0.4		73.4	0	26.6		
PHF	.250	.911	.663	.881	.000	.250	.250	.500	.861	.907	.250	.934	.875	.000	.950	.894	

Accurate Counts
978-664-2565

N/S Street : Route 13
E/W Street: Lincoln Street
City/State : Milford, NH
Weather : Cloudy

File Name : 51784005
Site Code : 51784005
Start Date : 5/4/2006
Page No : 1

Groups Printed- Cars

	Route 13 From North			Parking Lot From East			Route 13 From South			Lincoln St From West			
Start Time	Left	Thru	Right	Left	Thru	Right	Left	Thru	Right	Left	Thru	Right	Int. Total
07:00	0	44	14	0	0	0	8	31	0	16	1	6	120
07:15	1	38	20	0	0	0	20	38	0	27	0	9	153
07:30	0	37	10	0	0	0	8	43	1	30	0	9	138
07:45	0	40	8	0	0	0	7	40	0	25	0	8	128
Total	1	159	52	0	0	0	43	152	1	98	1	32	539
08:00	0	43	10	0	0	0	7	41	0	23	0	9	133
08:15	0	51	7	0	0	1	8	48	1	20	0	5	141
08:30	0	43	2	0	1	0	7	53	0	17	0	8	131
08:45	0	28	8	0	0	0	4	35	0	11	0	7	93
Total	0	165	27	0	1	1	26	177	1	71	0	29	498
Grand Total	1	324	79	0	1	1	69	329	2	169	1	61	1037
Apprch %	0.2	80.2	19.6	0	50	50	17.2	82.2	0.5	73.2	0.4	26.4	
Total %	0.1	31.2	7.6	0	0.1	0.1	6.7	31.7	0.2	16.3	0.1	5.9	

	Route 13 From North				Parking Lot From East				Route 13 From South				Lincoln St From West				
Start Time	Left	Thru	Right	App. Total	Left	Thru	Right	App. Total	Left	Thru	Right	App. Total	Left	Thru	Right	App. Total	Int. Total
Peak Hour Analysis From 07:00 to 08:45 - Peak 1 of 1																	
Peak Hour for Entire Intersection Begins at 07:15																	
07:15	**1**	38	**20**	**59**	0	0	0	0	**20**	38	0	**58**	27	0	**9**	36	**153**
07:30	0	37	10	47	0	0	0	0	8	**43**	**1**	52	**30**	0	9	**39**	138
07:45	0	40	8	48	0	0	0	0	7	40	0	47	25	0	8	33	128
08:00	0	**43**	10	53	0	0	0	0	7	41	0	48	23	0	9	32	133
Total Volume	1	158	48	207	0	0	0	0	42	162	1	205	105	0	35	140	552
% App. Total	0.5	76.3	23.2		0	0	0		20.5	79	0.5		75	0	25		
PHF	.250	.919	.600	.877	.000	.000	.000	.000	.525	.942	.250	.884	.875	.000	.972	.897	.902

Peak Hour Analysis From 07:00 to 08:45 - Peak 1 of 1
Peak Hour for Each Approach Begins at:

	07:00				07:45				07:45				07:15			
+0 mins.	0	**44**	14	58	0	0	0	0	7	40	0	47	27	0	**9**	36
+15 mins.	**1**	38	**20**	**59**	0	0	0	0	7	41	0	48	**30**	0	9	**39**
+30 mins.	0	37	10	47	0	0	**1**	**1**	**8**	48	**1**	57	25	0	8	33
+45 mins.	0	40	8	48	0	**1**	0	1	7	**53**	0	**60**	23	0	9	32
Total Volume	1	159	52	212	0	1	1	2	29	182	1	212	105	0	35	140
% App. Total	0.5	75	24.5		0	50	50		13.7	85.8	0.5		75	0	25	
PHF	.250	.903	.650	.898	.000	.250	.250	.500	.906	.858	.250	.883	.875	.000	.972	.897

Accurate Counts
978-664-2565

N/S Street : Route 13
E/W Street: Lincoln Street
City/State : Milford, NH
Weather : Cloudy

File Name : 51784005
Site Code : 51784005
Start Date : 5/4/2006
Page No : 1

Groups Printed- Trucks

	Route 13 From North			Parking Lot From East			Route 13 From South			Lincoln St From West			
Start Time	Left	Thru	Right	Left	Thru	Right	Left	Thru	Right	Left	Thru	Right	Int. Total
07:00	0	4	0	0	0	0	1	1	0	0	0	0	6
07:15	0	6	0	0	0	0	0	3	0	0	0	0	9
07:30	0	3	1	0	0	0	1	7	0	0	0	1	13
07:45	0	3	0	0	0	0	0	4	0	0	0	1	8
Total	0	16	1	0	0	0	2	15	0	0	0	2	36
08:00	0	5	2	0	0	0	2	5	0	0	0	1	15
08:15	0	5	0	0	0	0	0	4	0	0	0	0	9
08:30	0	1	0	0	0	0	0	1	0	0	0	2	4
08:45	0	3	0	0	0	0	1	2	0	1	0	1	8
Total	0	14	2	0	0	0	3	12	0	1	0	4	36
Grand Total	0	30	3	0	0	0	5	27	0	1	0	6	72
Apprch %	0	90.9	9.1	0	0	0	15.6	84.4	0	14.3	0	85.7	
Total %	0	41.7	4.2	0	0	0	6.9	37.5	0	1.4	0	8.3	

	Route 13 From North				Parking Lot From East				Route 13 From South				Lincoln St From West				
Start Time	Left	Thru	Right	App. Total	Left	Thru	Right	App. Total	Left	Thru	Right	App. Total	Left	Thru	Right	App. Total	Int. Total
Peak Hour Analysis From 07:00 to 08:45 - Peak 1 of 1																	
Peak Hour for Entire Intersection Begins at 07:15																	
07:15	0	**6**	0	6	0	0	0	0	0	3	0	3	0	0	0	0	9
07:30	0	3	1	4	0	0	0	0	1	**7**	0	**8**	0	0	**1**	**1**	13
07:45	0	3	0	3	0	0	0	0	0	4	0	4	0	0	1	1	8
08:00	0	5	**2**	**7**	0	0	0	0	**2**	5	0	7	0	0	1	1	**15**
Total Volume	0	17	3	20	0	0	0	0	3	19	0	22	0	0	3	3	45
% App. Total	0	85	15		0	0	0		13.6	86.4	0		0	0	100		
PHF	.000	.708	.375	.714	.000	.000	.000	.000	.375	.679	.000	.688	.000	.000	.750	.750	.750

Peak Hour Analysis From 07:00 to 08:45 - Peak 1 of 1
Peak Hour for Each Approach Begins at:

	07:15				07:00				07:30				08:00			
+0 mins.	0	**6**	0	6	0	0	0	0	1	**7**	0	**8**	0	0	1	1
+15 mins.	0	3	1	4	0	0	0	0	0	4	0	4	0	0	0	0
+30 mins.	0	3	0	3	0	0	0	0	**2**	5	0	7	0	0	**2**	**2**
+45 mins.	0	5	**2**	**7**	0	0	0	0	0	4	0	4	**1**	0	1	2
Total Volume	0	17	3	20	0	0	0	0	3	20	0	23	1	0	4	5
% App. Total	0	85	15		0	0	0		13	87	0		20	0	80	
PHF	.000	.708	.375	.714	.000	.000	.000	.000	.375	.714	.000	.719	.250	.000	.500	.625

Accurate Counts
978-664-2565

N/S Street : Route 13
E/W Street: Lincoln Street
City/State : Milford, NH
Weather : Cloudy

File Name : 51784005
Site Code : 51784005
Start Date : 5/4/2006
Page No : 1

	Route 13 From North				Parking Lot From East				Route 13 From South				Lincoln St From West				
Start Time	Left	Thru	Right	App. Total	Left	Thru	Right	App. Total	Left	Thru	Right	App. Total	Left	Thru	Right	App. Total	Int. Total
Peak Hour Analysis From 07:00 to 08:45 - Peak 1 of 1																	
Peak Hour for Entire Intersection Begins at 07:15																	
07:15	**1**	44	**20**	**65**	0	0	0	0	**20**	41	0	**61**	27	0	9	36	**162**
07:30	0	40	11	51	0	0	0	0	9	**50**	**1**	60	**30**	0	**10**	**40**	151
07:45	0	43	8	51	0	0	0	0	7	44	0	51	25	0	9	34	136
08:00	0	**48**	12	60	0	0	0	0	9	46	0	55	23	0	10	33	148
Total Volume	1	175	51	227	0	0	0	0	45	181	1	227	105	0	38	143	597
% App. Total	0.4	77.1	22.5		0	0	0		19.8	79.7	0.4		73.4	0	26.6		
PHF	.250	.911	.638	.873	.000	.000	.000	.000	.563	.905	.250	.930	.875	.000	.950	.894	.921

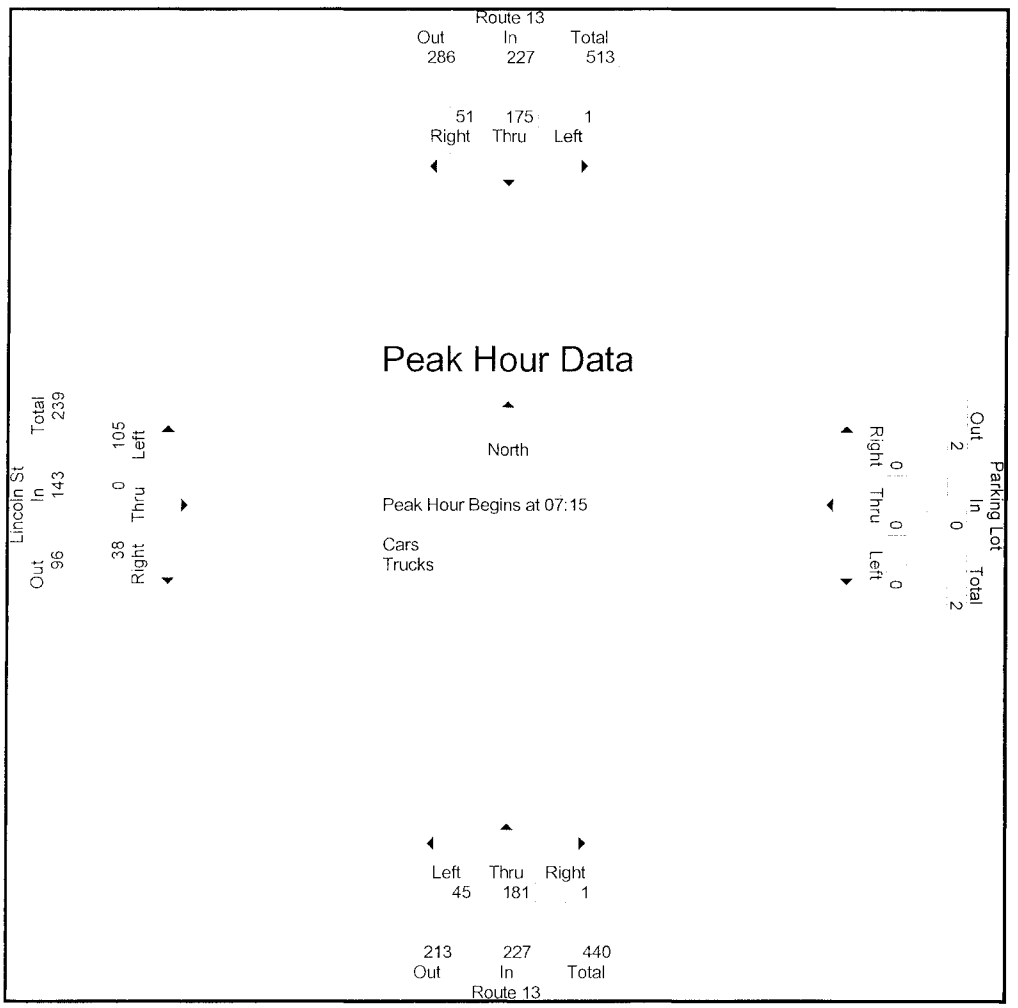

Accurate Counts
978-664-2565

N/S Street : Route 13
E/W Street: Lincoln Street
City/State : Milford, NH
Weather : Cloudy

File Name : 51784005
Site Code : 51784005
Start Date : 5/4/2006
Page No : 1

	Route 13 From North				Parking Lot From East				Route 13 From South				Lincoln St From West				
Start Time	Left	Thru	Right	App. Total	Left	Thru	Right	App. Total	Left	Thru	Right	App. Total	Left	Thru	Right	App. Total	Int. Total
Peak Hour Analysis From 07:00 to 08:45 - Peak 1 of 1																	
Peak Hour for Entire Intersection Begins at 07:15																	
07:15	**1**	38	**20**	**59**	0	0	0	0	**20**	38	0	**58**	27	0	**9**	36	**153**
07:30	0	37	10	47	0	0	0	0	8	**43**	**1**	52	**30**	0	9	**39**	138
07:45	0	40	8	48	0	0	0	0	7	40	0	47	25	0	8	33	128
08:00	0	**43**	10	53	0	0	0	0	7	41	0	48	23	0	9	32	133
Total Volume	1	158	48	207	0	0	0	0	42	162	1	205	105	0	35	140	552
% App. Total	0.5	76.3	23.2		0	0	0		20.5	79	0.5		75	0	25		
PHF	.250	.919	.600	.877	.000	.000	.000	.000	.525	.942	.250	.884	.875	.000	.972	.897	.902

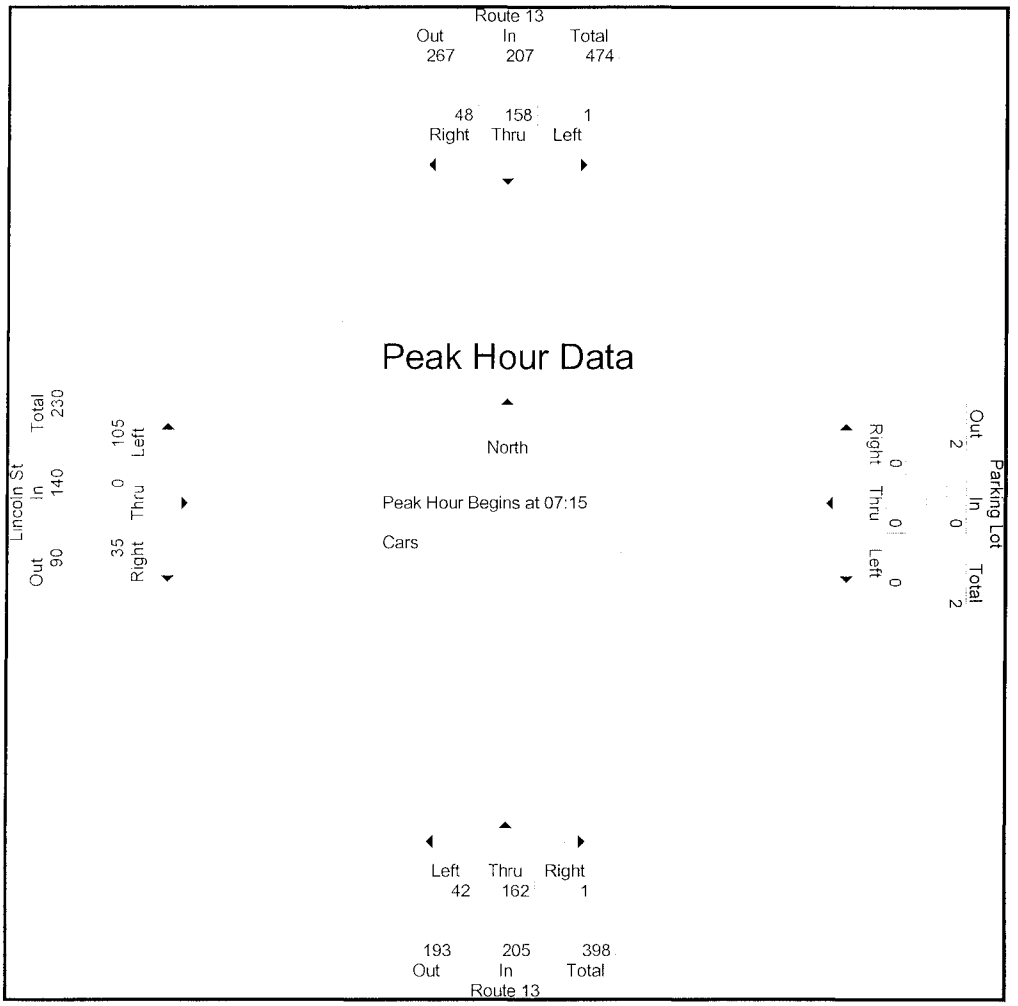

Accurate Counts
978-664-2565

N/S Street : Route 13
E/W Street: Lincoln Street
City/State : Milford, NH
Weather : Cloudy

File Name : 51784005
Site Code : 51784005
Start Date : 5/4/2006
Page No : 1

	Route 13 From North				Parking Lot From East				Route 13 From South				Lincoln St From West				
Start Time	Left	Thru	Right	App. Total	Left	Thru	Right	App. Total	Left	Thru	Right	App. Total	Left	Thru	Right	App. Total	Int. Total
Peak Hour Analysis From 07:00 to 08:45 - Peak 1 of 1																	
Peak Hour for Entire Intersection Begins at 07:15																	
07:15	0	**6**	0	6	0	0	0	0	0	3	0	3	0	0	0	0	9
07:30	0	3	1	4	0	0	0	0	1	**7**	0	**8**	0	0	**1**	**1**	13
07:45	0	3	0	3	0	0	0	0	0	4	0	4	0	0	1	1	8
08:00	0	5	**2**	**7**	0	0	0	0	**2**	5	0	7	0	0	1	1	**15**
Total Volume	0	17	3	20	0	0	0	0	3	19	0	22	0	0	3	3	45
% App. Total	0	85	15		0	0	0		13.6	86.4	0		0	0	100		
PHF	.000	.708	.375	.714	.000	.000	.000	.000	.375	.679	.000	.688	.000	.000	.750	.750	.750

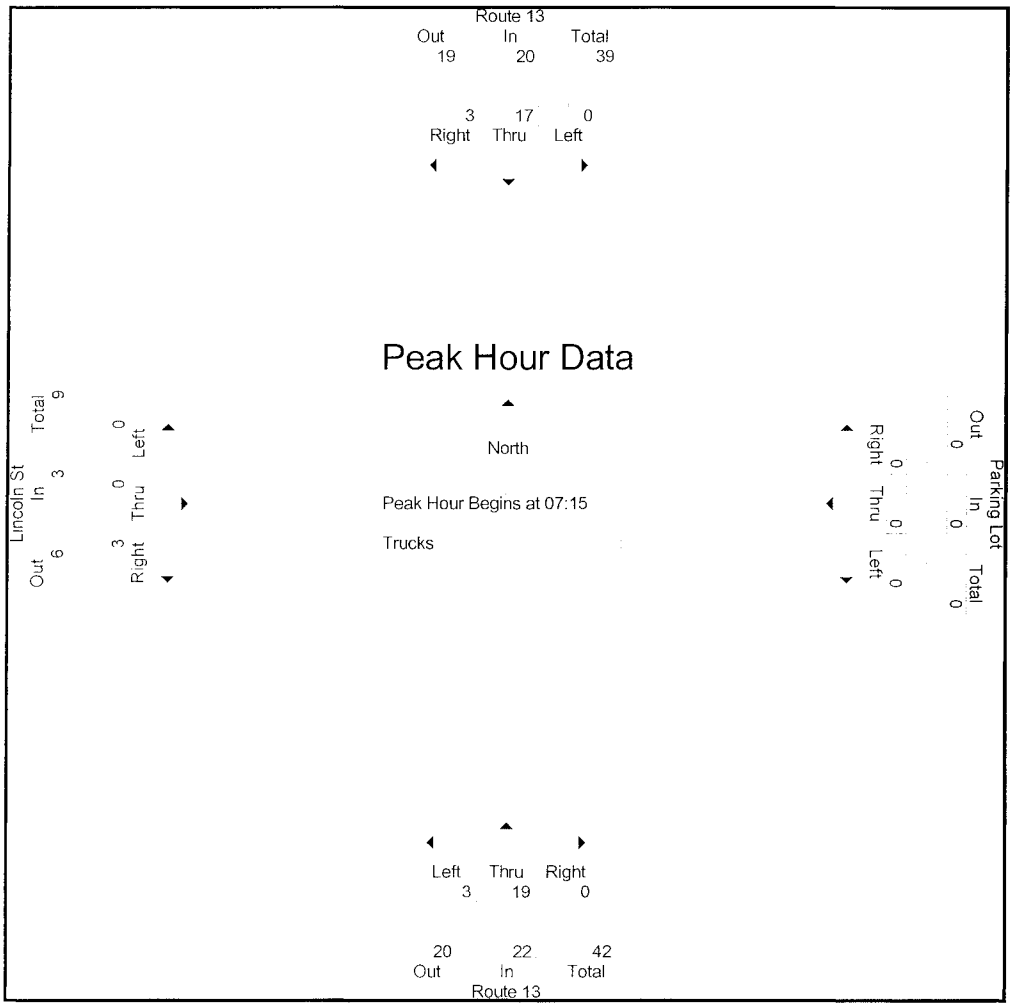

Accurate Counts
978-664-2565

N/S Street : Route 13
E/W Street: Lincoln Street
City/State : Milford, NH
Weather : Rain

File Name : 517840A5
Site Code : 51784005
Start Date : 5/10/2006
Page No : 1

Groups Printed- Cars - Trucks

	Route 13 From North			Parking Lot From East			Route 13 From South			Lincoln St From West			
Start Time	Left	Thru	Right	Left	Thru	Right	Left	Thru	Right	Left	Thru	Right	Int. Total
16:00	0	50	21	0	1	0	10	50	0	15	0	10	157
16:15	0	57	27	0	0	0	11	55	0	27	0	12	189
16:30	0	38	29	0	1	0	9	61	1	13	0	8	160
16:45	0	54	25	0	0	0	12	57	0	15	0	7	170
Total	0	199	102	0	2	0	42	223	1	70	0	37	676
17:00	0	51	32	1	0	2	9	71	1	10	0	7	184
17:15	0	64	33	0	1	0	3	85	0	19	0	11	216
17:30	0	54	33	0	0	0	11	69	0	16	0	8	191
17:45	0	56	42	0	0	0	10	74	0	9	0	2	193
Total	0	225	140	1	1	2	33	299	1	54	0	28	784
Grand Total	0	424	242	1	3	2	75	522	2	124	0	65	1460
Apprch %	0	63.7	36.3	16.7	50	33.3	12.5	87.1	0.3	65.6	0	34.4	
Total %	0	29	16.6	0.1	0.2	0.1	5.1	35.8	0.1	8.5	0	4.5	
Cars	0	415	240	1	3	2	75	508	2	124	0	65	1435
% Cars	0	97.9	99.2	100	100	100	100	97.3	100	100	0	100	98.3
Trucks	0	9	2	0	0	0	0	14	0	0	0	0	25
% Trucks	0	2.1	0.8	0	0	0	0	2.7	0	0	0	0	1.7

	Route 13 From North				Parking Lot From East				Route 13 From South				Lincoln St From West				
Start Time	Left	Thru	Right	App. Total	Left	Thru	Right	App. Total	Left	Thru	Right	App. Total	Left	Thru	Right	App. Total	Int. Total
Peak Hour Analysis From 16:00 to 17:45 - Peak 1 of 1																	
Peak Hour for Entire Intersection Begins at 17:00																	
17:00	0	51	32	83	**1**	0	**2**	**3**	9	71	**1**	81	10	0	7	17	184
17:15	0	**64**	33	97	0	**1**	0	1	3	**85**	0	**88**	**19**	0	**11**	**30**	**216**
17:30	0	54	33	87	0	0	0	0	**11**	69	0	80	16	0	8	24	191
17:45	0	56	**42**	**98**	0	0	0	0	10	74	0	84	9	0	2	11	193
Total Volume	0	225	140	365	1	1	2	4	33	299	1	333	54	0	28	82	784
% App. Total	0	61.6	38.4		25	25	50		9.9	89.8	0.3		65.9	0	34.1		
PHF	.000	.879	.833	.931	.250	.250	.250	.333	.750	.879	.250	.946	.711	.000	.636	.683	.907

Peak Hour Analysis From 16:00 to 17:45 - Peak 1 of 1
Peak Hour for Each Approach Begins at:

	17:00				16:30				17:00				16:00			
+0 mins.	0	51	32	83	0	**1**	0	1	9	71	**1**	81	15	0	10	25
+15 mins.	0	**64**	33	97	0	0	0	0	3	**85**	0	**88**	**27**	0	**12**	**39**
+30 mins.	0	54	33	87	**1**	0	**2**	**3**	**11**	69	0	80	13	0	8	21
+45 mins.	0	56	**42**	**98**	0	1	0	1	10	74	0	84	15	0	7	22
Total Volume	0	225	140	365	1	2	2	5	33	299	1	333	70	0	37	107
% App. Total	0	61.6	38.4		20	40	40		9.9	89.8	0.3		65.4	0	34.6	
PHF	.000	.879	.833	.931	.250	.500	.250	.417	.750	.879	.250	.946	.648	.000	.771	.686

Accurate Counts
978-664-2565

N/S Street : Route 13
E/W Street: Lincoln Street
City/State : Milford, NH
Weather : Rain

File Name : 517840A5
Site Code : 51784005
Start Date : 5/10/2006
Page No : 1

Groups Printed- Cars

	Route 13 From North			Parking Lot From East			Route 13 From South			Lincoln St From West			
Start Time	Left	Thru	Right	Left	Thru	Right	Left	Thru	Right	Left	Thru	Right	Int. Total
16:00	0	49	21	0	1	0	10	48	0	15	0	10	154
16:15	0	54	26	0	0	0	11	52	0	27	0	12	182
16:30	0	38	29	0	1	0	9	58	1	13	0	8	157
16:45	0	53	24	0	0	0	12	54	0	15	0	7	165
Total	0	194	100	0	2	0	42	212	1	70	0	37	658
17:00	0	50	32	1	0	2	9	70	1	10	0	7	182
17:15	0	62	33	0	1	0	3	84	0	19	0	11	213
17:30	0	53	33	0	0	0	11	69	0	16	0	8	190
17:45	0	56	42	0	0	0	10	73	0	9	0	2	192
Total	0	221	140	1	1	2	33	296	1	54	0	28	777
Grand Total	0	415	240	1	3	2	75	508	2	124	0	65	1435
Apprch %	0	63.4	36.6	16.7	50	33.3	12.8	86.8	0.3	65.6	0	34.4	
Total %	0	28.9	16.7	0.1	0.2	0.1	5.2	35.4	0.1	8.6	0	4.5	

	Route 13 From North				Parking Lot From East				Route 13 From South				Lincoln St From West				
Start Time	Left	Thru	Right	App. Total	Left	Thru	Right	App. Total	Left	Thru	Right	App. Total	Left	Thru	Right	App. Total	Int. Total
Peak Hour Analysis From 16:00 to 17:45 - Peak 1 of 1																	
Peak Hour for Entire Intersection Begins at 17:00																	
17:00	0	50	32	82	**1**	0	**2**	**3**	9	70	**1**	80	10	0	7	17	182
17:15	0	**62**	33	95	0	**1**	0	1	3	**84**	0	**87**	**19**	0	**11**	**30**	**213**
17:30	0	53	33	86	0	0	0	0	**11**	69	0	80	16	0	8	24	190
17:45	0	56	**42**	**98**	0	0	0	0	10	73	0	83	9	0	2	11	192
Total Volume	0	221	140	361	1	1	2	4	33	296	1	330	54	0	28	82	777
% App. Total	0	61.2	38.8		25	25	50		10	89.7	0.3		65.9	0	34.1		
PHF	.000	.891	.833	.921	.250	.250	.250	.333	.750	.881	.250	.948	.711	.000	.636	.683	.912

Peak Hour Analysis From 16:00 to 17:45 - Peak 1 of 1
Peak Hour for Each Approach Begins at:

	17:00				16:30				17:00				16:00				
+0 mins.	0	50	32	82	0	**1**	0	1	9	70	**1**	80	15	0	10	25	
+15 mins.	0	**62**	33	95	0	0	0	0	3	**84**	0	**87**	**27**	0	**12**	**39**	
+30 mins.	0	53	33	86	**1**	0	**2**	**3**	**11**	69	0	80	13	0	8	21	
+45 mins.	0	56	**42**	**98**	0	1	0	1	10	73	0	83	15	0	7	22	
Total Volume	0	221	140	361	1	2	2	5	33	296	1	330	70	0	37	107	
% App. Total	0	61.2	38.8		20	40	40		10	89.7	0.3		65.4	0	34.6		
PHF	.000	.891	.833	.921	250	.500	.250	.417	.750	.881	.250	.948	.648	.000	.771	.686	

Accurate Counts
978-664-2565

N/S Street : Route 13
E/W Street: Lincoln Street
City/State : Milford, NH
Weather : Rain

File Name : 517840A5
Site Code : 51784005
Start Date : 5/10/2006
Page No : 1

Groups Printed- Trucks

	Route 13 From North			Parking Lot From East			Route 13 From South			Lincoln St From West			
Start Time	Left	Thru	Right	Left	Thru	Right	Left	Thru	Right	Left	Thru	Right	Int. Total
16:00	0	1	0	0	0	0	0	2	0	0	0	0	3
16:15	0	3	1	0	0	0	0	3	0	0	0	0	7
16:30	0	0	0	0	0	0	0	3	0	0	0	0	3
16:45	0	1	1	0	0	0	0	3	0	0	0	0	5
Total	0	5	2	0	0	0	0	11	0	0	0	0	18
17:00	0	1	0	0	0	0	0	1	0	0	0	0	2
17:15	0	2	0	0	0	0	0	1	0	0	0	0	3
17:30	0	1	0	0	0	0	0	0	0	0	0	0	1
17:45	0	0	0	0	0	0	0	1	0	0	0	0	1
Total	0	4	0	0	0	0	0	3	0	0	0	0	7
Grand Total	0	9	2	0	0	0	0	14	0	0	0	0	25
Apprch %	0	81.8	18.2	0	0	0	0	100	0	0	0	0	
Total %	0	36	8	0	0	0	0	56	0	0	0	0	

	Route 13 From North				Parking Lot From East				Route 13 From South				Lincoln St From West				
Start Time	Left	Thru	Right	App. Total	Left	Thru	Right	App. Total	Left	Thru	Right	App. Total	Left	Thru	Right	App. Total	Int. Total
Peak Hour Analysis From 16:00 to 17:45 - Peak 1 of 1																	
Peak Hour for Entire Intersection Begins at 16:00																	
16:00	0	1	0	1	0	0	0	0	0	2	0	2	0	0	0	0	3
16:15	0	**3**	**1**	**4**	0	0	0	0	0	**3**	0	**3**	0	0	0	0	**7**
16:30	0	0	0	0	0	0	0	0	0	3	0	3	0	0	0	0	3
16:45	0	1	1	2	0	0	0	0	0	3	0	3	0	0	0	0	5
Total Volume	0	5	2	7	0	0	0	0	0	11	0	11	0	0	0	0	18
% App. Total	0	71.4	28.6		0	0	0		0	100	0		0	0	0		
PHF	.000	.417	.500	.438	.000	.000	.000	.000	.000	.917	.000	.917	.000	.000	.000	.000	.643

Peak Hour Analysis From 16:00 to 17:45 - Peak 1 of 1
Peak Hour for Each Approach Begins at

	16:00				16:00				16:00				16:00			
+0 mins.	0	1	0	1	0	0	0	0	0	2	0	2	0	0	0	0
+15 mins.	0	**3**	**1**	**4**	0	0	0	0	0	**3**	0	**3**	0	0	0	0
+30 mins.	0	0	0	0	0	0	0	0	0	3	0	3	0	0	0	0
+45 mins.	0	1	1	2	0	0	0	0	0	3	0	3	0	0	0	0
Total Volume	0	5	2	7	0	0	0	0	0	11	0	11	0	0	0	0
% App. Total	0	71.4	28.6		0	0	0		0	100	0		0	0	0	
PHF	.000	.417	.500	.438	.000	.000	.000	.000	.000	.917	.000	.917	.000	.000	.000	.000

Accurate Counts
978-664-2565

N/S Street : Route 13
E/W Street: Lincoln Street
City/State : Milford, NH
Weather : Rain

File Name : 517840A5
Site Code : 51784005
Start Date : 5/10/2006
Page No : 1

	Route 13 From North				Parking Lot From East				Route 13 From South				Lincoln St From West				
Start Time	Left	Thru	Right	App. Total	Left	Thru	Right	App. Total	Left	Thru	Right	App. Total	Left	Thru	Right	App. Total	Int. Total
Peak Hour Analysis From 16:00 to 17:45 - Peak 1 of 1																	
Peak Hour for Entire Intersection Begins at 17:00																	
17:00	0	51	32	83	**1**	0	**2**	**3**	9	71	**1**	81	10	0	7	17	184
17:15	0	**64**	33	97	0	**1**	0	1	3	**85**	0	**88**	**19**	0	**11**	**30**	**216**
17:30	0	54	33	87	0	0	0	0	**11**	69	0	80	16	0	8	24	191
17:45	0	56	**42**	**98**	0	0	0	0	10	74	0	84	9	0	2	11	193
Total Volume	0	225	140	365	1	1	2	4	33	299	1	333	54	0	28	82	784
% App. Total	0	61.6	38.4		25	25	50		9.9	89.8	0.3		65.9	0	34.1		
PHF	.000	.879	.833	.931	.250	.250	.250	.333	.750	.879	.250	.946	.711	.000	.636	.683	.907

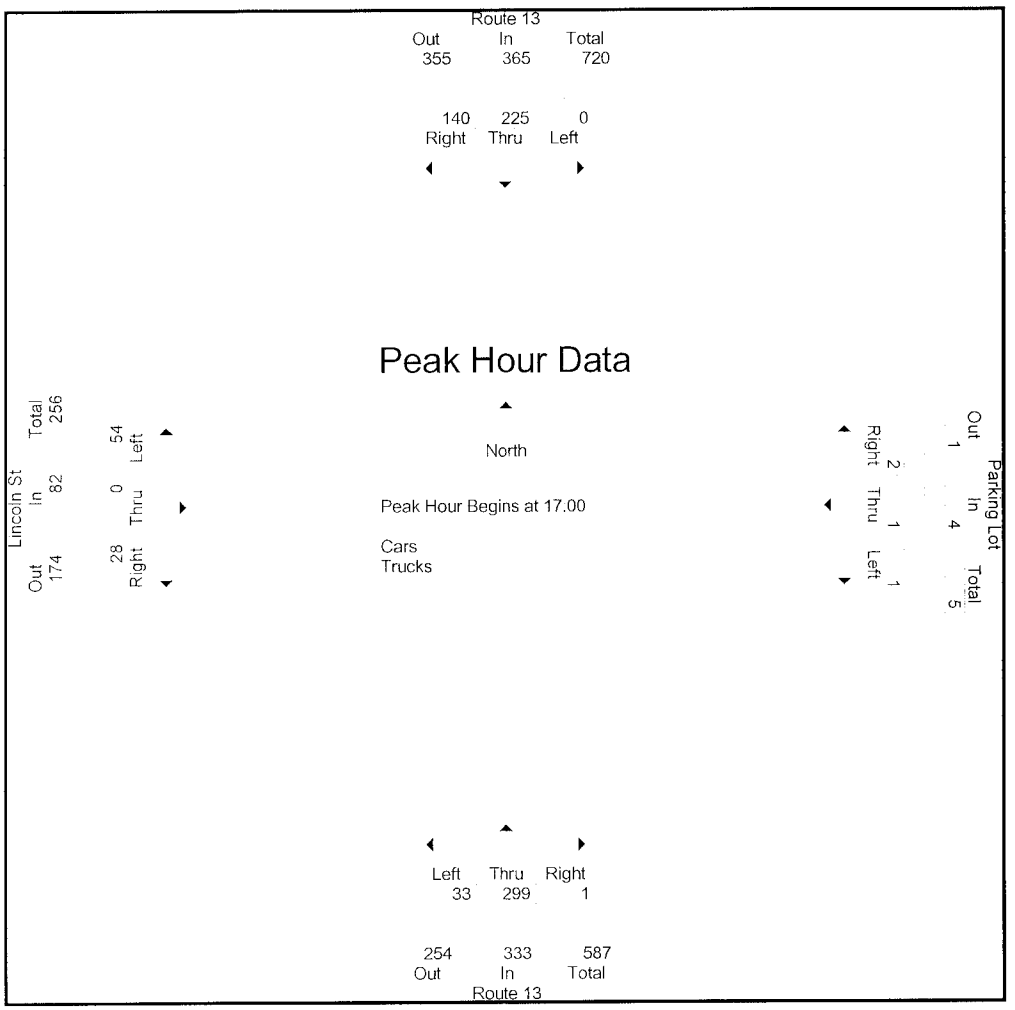

Accurate Counts
978-664-2565

N/S Street : Route 13
E/W Street: Lincoln Street
City/State : Milford, NH
Weather : Rain

File Name : 517840A5
Site Code : 51784005
Start Date : 5/10/2006
Page No : 1

	Route 13 From North				Parking Lot From East				Route 13 From South				Lincoln St From West				
Start Time	Left	Thru	Right	App. Total	Left	Thru	Right	App. Total	Left	Thru	Right	App. Total	Left	Thru	Right	App. Total	Int. Total
Peak Hour Analysis From 16:00 to 17:45 - Peak 1 of 1																	
Peak Hour for Entire Intersection Begins at 17:00																	
17:00	0	50	32	82	**1**	0	**2**	**3**	9	70	**1**	80	10	0	7	17	182
17:15	0	**62**	33	95	0	**1**	0	1	3	**84**	0	**87**	**19**	0	**11**	**30**	**213**
17:30	0	53	33	86	0	0	0	0	**11**	69	0	80	16	0	8	24	190
17:45	0	56	**42**	**98**	0	0	0	0	10	73	0	83	9	0	2	11	192
Total Volume	0	221	140	361	1	1	2	4	33	296	1	330	54	0	28	82	777
% App. Total	0	61.2	38.8		25	25	50		10	89.7	0.3		65.9	0	34.1		
PHF	.000	.891	.833	.921	.250	.250	.250	.333	.750	.881	.250	.948	.711	.000	.636	.683	.912

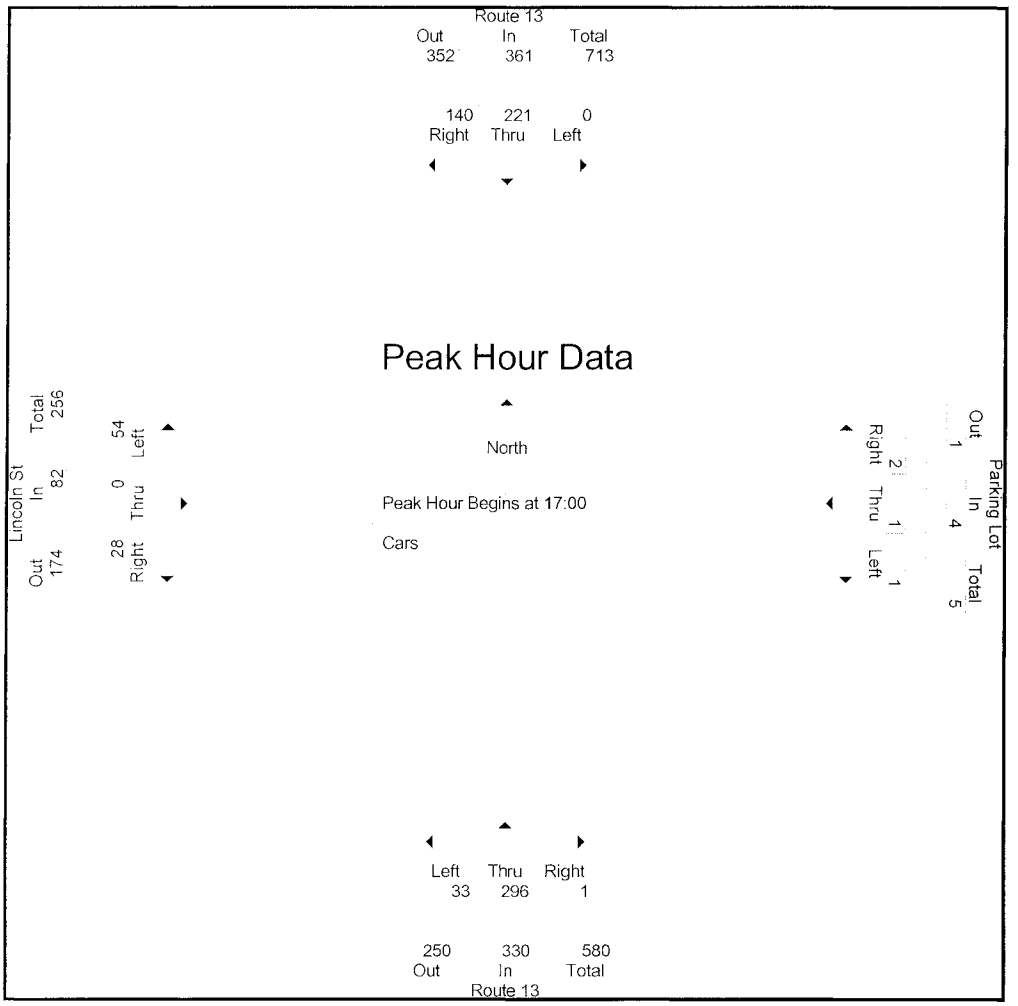

Accurate Counts
978-664-2565

N/S Street : Route 13
E/W Street: Lincoln Street
City/State : Milford, NH
Weather : Rain

File Name : 517840A5
Site Code : 51784005
Start Date : 5/10/2006
Page No : 1

	Route 13 From North				Parking Lot From East				Route 13 From South				Lincoln St From West				
Start Time	Left	Thru	Right	App. Total	Left	Thru	Right	App. Total	Left	Thru	Right	App. Total	Left	Thru	Right	App. Total	Int. Total
Peak Hour Analysis From 16:00 to 17:45 - Peak 1 of 1																	
Peak Hour for Entire Intersection Begins at 16:00																	
16:00	0	1	0	1	0	0	0	0	0	2	0	2	0	0	0	0	3
16:15	0	**3**	**1**	**4**	0	0	0	0	0	**3**	0	**3**	0	0	0	0	**7**
16:30	0	0	0	0	0	0	0	0	0	3	0	3	0	0	0	0	3
16:45	0	1	1	2	0	0	0	0	0	3	0	3	0	0	0	0	5
Total Volume	0	5	2	7	0	0	0	0	0	11	0	11	0	0	0	0	18
% App. Total	0	71.4	28.6		0	0	0		0	100	0		0	0	0		
PHF	.000	.417	.500	.438	.000	.000	.000	.000	.000	.917	.000	.917	.000	.000	.000	.000	.643

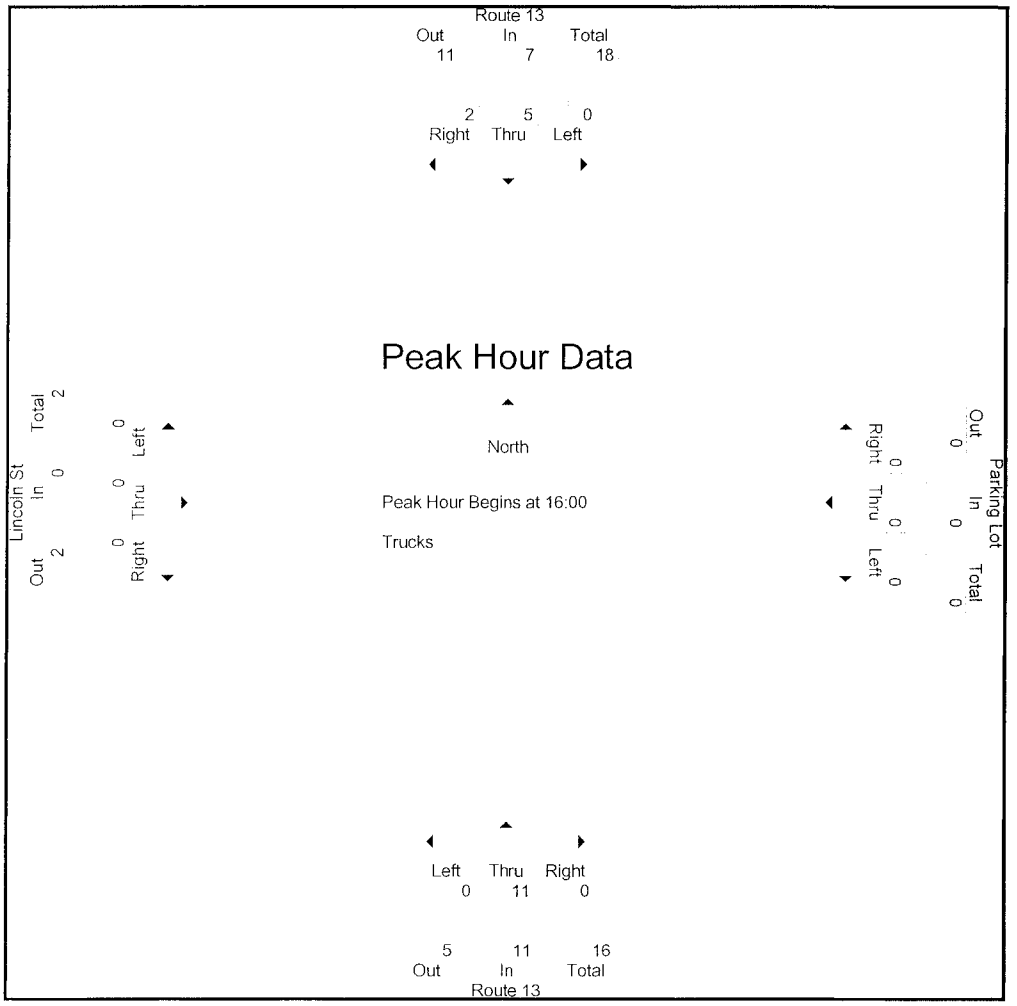

Accurate Counts
978-664-2565

N/S Street : Route 13
E/W Street: Lincoln Street
City/State : Milford, NH
Weather : Rain

File Name : 517840B5
Site Code : 51784005
Start Date : 5/13/2006
Page No : 1

Groups Printed- Cars - Trucks

	Route 13 From North			Parking Lot From East			Route 13 From South			Lincoln St From West			
Start Time	Left	Thru	Right	Left	Thru	Right	Left	Thru	Right	Left	Thru	Right	Int. Total
10:00	0	35	16	0	0	1	1	62	0	18	0	9	142
10:15	0	42	22	1	0	0	1	59	0	21	0	9	155
10:30	0	53	18	0	0	0	2	65	0	20	0	7	165
10:45	0	56	19	0	0	0	6	68	0	24	0	8	181
Total	0	186	75	1	0	1	10	254	0	83	0	33	643
11:00	0	47	21	0	0	0	7	72	0	25	0	6	178
11:15	0	60	21	1	0	0	3	75	0	26	0	8	194
11:30	0	56	17	0	0	1	9	51	0	32	0	14	180
11:45	1	53	17	0	0	0	7	63	0	41	0	13	195
Total	1	216	76	1	0	1	26	261	0	124	0	41	747
12:00	0	43	20	0	0	0	8	72	0	51	0	17	211
12:15	0	50	15	0	0	0	9	52	0	19	0	11	156
12:30	0	41	17	0	0	0	4	55	0	14	0	8	139
12:45	0	42	18	0	0	0	7	51	0	8	0	7	133
Total	0	176	70	0	0	0	28	230	0	92	0	43	639
13:00	0	54	23	0	0	0	6	59	0	23	0	9	174
13:15	0	41	21	0	0	0	3	48	0	17	0	9	139
13:30	0	46	21	1	0	0	2	42	0	22	0	7	141
13:45	0	36	12	0	0	1	6	52	0	13	0	9	129
Total	0	177	77	1	0	1	17	201	0	75	0	34	583
Grand Total	1	755	298	3	0	3	81	946	0	374	0	151	2612
Apprch %	0.1	71.6	28.3	50	0	50	7.9	92.1	0	71.2	0	28.8	
Total %	0	28.9	11.4	0.1	0	0.1	3.1	36.2	0	14.3	0	5.8	
Cars	1	750	298	3	0	3	80	943	0	374	0	151	2603
% Cars	100	99.3	100	100	0	100	98.8	99.7	0	100	0	100	99.7
Trucks	0	5	0	0	0	0	1	3	0	0	0	0	9
% Trucks	0	0.7	0	0	0	0	1.2	0.3	0	0	0	0	0.3

	Route 13 From North				Parking Lot From East				Route 13 From South				Lincoln St From West				
Start Time	Left	Thru	Right	App. Total	Left	Thru	Right	App. Total	Left	Thru	Right	App. Total	Left	Thru	Right	App. Total	Int. Total
Peak Hour Analysis From 10:00 to 11:45 - Peak 1 of 1																	
Peak Hour for Entire Intersection Begins at 11:00																	
11:00	0	47	**21**	68	0	0	0	0	7	72	0	**79**	25	0	6	31	178
11:15	0	**60**	21	**81**	**1**	0	0	**1**	3	**75**	0	78	26	0	8	34	194
11:30	0	56	17	73	0	0	**1**	1	**9**	51	0	60	32	0	**14**	46	180
11:45	**1**	53	17	71	0	0	0	0	7	63	0	70	**41**	0	13	**54**	**195**
Total Volume	1	216	76	293	1	0	1	2	26	261	0	287	124	0	41	165	747
% App. Total	0.3	73.7	25.9		50	0	50		9.1	90.9	0		75.2	0	24.8		
PHF	.250	.900	.905	.904	.250	.000	.250	.500	.722	.870	.000	.908	.756	.000	.732	.764	.958
Peak Hour Analysis From 10:00 to 11:45 - Peak 1 of 1																	
Peak Hour for Each Approach Begins at:																	
	10:45				10:00				10:30				11:00				
+0 mins.	0	56	19	75	0	0	**1**	**1**	2	65	0	67	25	0	6	31	
+15 mins.	0	47	**21**	68	**1**	0	0	1	6	68	0	74	26	0	8	34	
+30 mins.	0	**60**	21	**81**	0	0	0	0	**7**	72	0	**79**	32	0	**14**	46	
+45 mins.	0	56	17	73	0	0	0	0	3	**75**	0	78	**41**	0	13	**54**	
Total Volume	0	219	78	297	1	0	1	2	18	280	0	298	124	0	41	165	
% App. Total	0	73.7	26.3		50	0	50		6	94	0		75.2	0	24.8		
PHF	000	.913	.929	.917	.250	.000	.250	.500	.643	.933	.000	.943	.756	.000	.732	.764	

Accurate Counts
978-664-2565

N/S Street : Route 13
E/W Street: Lincoln Street
City/State : Milford, NH
Weather : Rain

File Name : 517840B5
Site Code : 51784005
Start Date : 5/13/2006
Page No : 1

Groups Printed- Cars

	Route 13 From North			Parking Lot From East			Route 13 From South			Lincoln St From West			
Start Time	Left	Thru	Right	Left	Thru	Right	Left	Thru	Right	Left	Thru	Right	Int. Total
10:00	0	35	16	0	0	1	1	61	0	18	0	9	141
10:15	0	41	22	1	0	0	1	59	0	21	0	9	154
10:30	0	53	18	0	0	0	2	65	0	20	0	7	165
10:45	0	55	19	0	0	0	6	68	0	24	0	8	180
Total	0	184	75	1	0	1	10	253	0	83	0	33	640
11:00	0	47	21	0	0	0	6	72	0	25	0	6	177
11:15	0	60	21	1	0	0	3	75	0	26	0	8	194
11:30	0	56	17	0	0	1	9	51	0	32	0	14	180
11:45	1	53	17	0	0	0	7	62	0	41	0	13	194
Total	1	216	76	1	0	1	25	260	0	124	0	41	745
12:00	0	42	20	0	0	0	8	72	0	51	0	17	210
12:15	0	50	15	0	0	0	9	52	0	19	0	11	156
12:30	0	41	17	0	0	0	4	54	0	14	0	8	138
12:45	0	41	18	0	0	0	7	51	0	8	0	7	132
Total	0	174	70	0	0	0	28	229	0	92	0	43	636
13:00	0	53	23	0	0	0	6	59	0	23	0	9	173
13:15	0	41	21	0	0	0	3	48	0	17	0	9	139
13:30	0	46	21	1	0	0	2	42	0	22	0	7	141
13:45	0	36	12	0	0	1	6	52	0	13	0	9	129
Total	0	176	77	1	0	1	17	201	0	75	0	34	582
Grand Total	1	750	298	3	0	3	80	943	0	374	0	151	2603
Apprch %	0.1	71.5	28.4	50	0	50	7.8	92.2	0	71.2	0	28.8	
Total %	0	28.8	11.4	0.1	0	0.1	3.1	36.2	0	14.4	0	5.8	

	Route 13 From North				Parking Lot From East				Route 13 From South				Lincoln St From West				
Start Time	Left	Thru	Right	App Total	Left	Thru	Right	App Total	Left	Thru	Right	App. Total	Left	Thru	Right	App Total	Int. Total
Peak Hour Analysis From 10:00 to 11:45 - Peak 1 of 1																	
Peak Hour for Entire Intersection Begins at 11:00																	
11:00	0	47	**21**	68	0	0	0	0	6	72	0	**78**	25	0	6	31	177
11:15	0	**60**	21	**81**	**1**	0	0	**1**	3	**75**	0	78	26	0	8	34	**194**
11:30	0	56	17	73	0	0	**1**	1	**9**	51	0	60	32	0	**14**	46	180
11:45	**1**	53	17	71	0	0	0	0	7	62	0	69	**41**	0	13	**54**	194
Total Volume	1	216	76	293	1	0	1	2	25	260	0	285	124	0	41	165	745
% App. Total	0.3	73.7	25.9		50	0	50		8.8	91.2	0		75.2	0	24.8		
PHF	.250	.900	.905	.904	.250	.000	.250	.500	.694	.867	.000	.913	.756	.000	.732	.764	.960

Peak Hour Analysis From 10:00 to 11:45 - Peak 1 of 1
Peak Hour for Each Approach Begins at:

	10:45				10:00				10:30				11:00			
+0 mins.	0	55	19	74	0	0	**1**	**1**	2	65	0	67	25	0	6	31
+15 mins.	0	47	**21**	68	**1**	0	0	1	**6**	68	0	74	26	0	8	34
+30 mins.	0	**60**	21	**81**	0	0	0	0	6	72	0	**78**	32	0	**14**	46
+45 mins.	0	56	17	73	0	0	0	0	3	**75**	0	78	**41**	0	13	**54**
Total Volume	0	218	78	296	1	0	1	2	17	280	0	297	124	0	41	165
% App. Total	0	73.6	26.4		50	0	50		5.7	94.3	0		75.2	0	24.8	
PHF	.000	.908	.929	.914	.250	.000	.250	.500	.708	.933	.000	.952	.756	.000	.732	.764

Accurate Counts
978-664-2565

N/S Street : Route 13
E/W Street: Lincoln Street
City/State : Milford, NH
Weather : Rain

File Name : 517840B5
Site Code : 51784005
Start Date : 5/13/2006
Page No : 1

Groups Printed- Trucks

	Route 13 From North			Parking Lot From East			Route 13 From South			Lincoln St From West			
Start Time	Left	Thru	Right	Left	Thru	Right	Left	Thru	Right	Left	Thru	Right	Int. Total
10:00	0	0	0	0	0	0	0	1	0	0	0	0	1
10:15	0	1	0	0	0	0	0	0	0	0	0	0	1
10:30	0	0	0	0	0	0	0	0	0	0	0	0	0
10:45	0	1	0	0	0	0	0	0	0	0	0	0	1
Total	0	2	0	0	0	0	0	1	0	0	0	0	3
11:00	0	0	0	0	0	0	1	0	0	0	0	0	1
11:15	0	0	0	0	0	0	0	0	0	0	0	0	0
11:30	0	0	0	0	0	0	0	0	0	0	0	0	0
11:45	0	0	0	0	0	0	0	1	0	0	0	0	1
Total	0	0	0	0	0	0	1	1	0	0	0	0	2
12:00	0	1	0	0	0	0	0	0	0	0	0	0	1
12:15	0	0	0	0	0	0	0	0	0	0	0	0	0
12:30	0	0	0	0	0	0	0	1	0	0	0	0	1
12:45	0	1	0	0	0	0	0	0	0	0	0	0	1
Total	0	2	0	0	0	0	0	1	0	0	0	0	3
13:00	0	1	0	0	0	0	0	0	0	0	0	0	1
13:15	0	0	0	0	0	0	0	0	0	0	0	0	0
13:30	0	0	0	0	0	0	0	0	0	0	0	0	0
13:45	0	0	0	0	0	0	0	0	0	0	0	0	0
Total	0	1	0	0	0	0	0	0	0	0	0	0	1
Grand Total	0	5	0	0	0	0	1	3	0	0	0	0	9
Apprch %	0	100	0	0	0	0	25	75	0	0	0	0	
Total %	0	55.6	0	0	0	0	11.1	33.3	0	0	0	0	

	Route 13 From North				Parking Lot From East				Route 13 From South				Lincoln St From West				
Start Time	Left	Thru	Right	App. Total	Left	Thru	Right	App. Total	Left	Thru	Right	App. Total	Left	Thru	Right	App. Total	Int. Total
Peak Hour Analysis From 10:00 to 11:45 - Peak 1 of 1																	
Peak Hour for Entire Intersection Begins at 10:00																	
10:00	0	0	0	0	0	0	0	0	0	1	0	1	0	0	0	0	1
10:15	0	1	0	1	0	0	0	0	0	0	0	0	0	0	0	0	1
10:30	0	0	0	0	0	0	0	0	0	0	0	0	0	0	0	0	0
10:45	0	1	0	1	0	0	0	0	0	0	0	0	0	0	0	0	1
Total Volume	0	2	0	2	0	0	0	0	0	1	0	1	0	0	0	0	3
% App. Total	0	100	0		0	0	0		0	100	0		0	0	0		
PHF	.000	.500	.000	.500	.000	.000	.000	.000	.000	.250	.000	.250	.000	.000	.000	.000	.750

Peak Hour Analysis From 10:00 to 11:45 - Peak 1 of 1
Peak Hour for Each Approach Begins at:

	10:00				10:00				11:00				10:00			
+0 mins.	0	0	0	0	0	0	0	0	1	0	0	1	0	0	0	0
+15 mins.	0	1	0	1	0	0	0	0	0	0	0	0	0	0	0	0
+30 mins.	0	0	0	0	0	0	0	0	0	0	0	0	0	0	0	0
+45 mins.	0	1	0	1	0	0	0	0	0	1	0	1	0	0	0	0
Total Volume	0	2	0	2	0	0	0	0	1	1	0	2	0	0	0	0
% App. Total	0	100	0		0	0	0		50	50	0		0	0	0	
PHF	.000	.500	.000	.500	.000	.000	.000	.000	.250	.250	.000	.500	.000	.000	.000	.000

Accurate Counts
978-664-2565

N/S Street : Route 13
E/W Street: Lincoln Street
City/State : Milford, NH
Weather : Rain

File Name : 517840B5
Site Code : 51784005
Start Date : 5/13/2006
Page No : 1

	Route 13 From North				Parking Lot From East				Route 13 From South				Lincoln St From West				
Start Time	Left	Thru	Right	App Total	Left	Thru	Right	App Total	Left	Thru	Right	App Total	Left	Thru	Right	App. Total	Int. Total
Peak Hour Analysis From 10:00 to 11:45 - Peak 1 of 1																	
Peak Hour for Entire Intersection Begins at 11:00																	
11:00	0	47	**21**	68	0	0	0	0	7	72	0	**79**	25	0	6	31	178
11:15	0	**60**	21	**81**	**1**	0	0	**1**	3	**75**	0	78	26	0	8	34	194
11:30	0	56	17	73	0	0	**1**	1	**9**	51	0	60	32	0	**14**	46	180
11:45	**1**	53	17	71	0	0	0	0	7	63	0	70	**41**	0	13	**54**	**195**
Total Volume	1	216	76	293	1	0	1	2	26	261	0	287	124	0	41	165	747
% App. Total	0.3	73.7	25.9		50	0	50		9.1	90.9	0		75.2	0	24.8		
PHF	.250	.900	.905	.904	.250	.000	.250	.500	.722	.870	.000	.908	.756	.000	.732	.764	.958

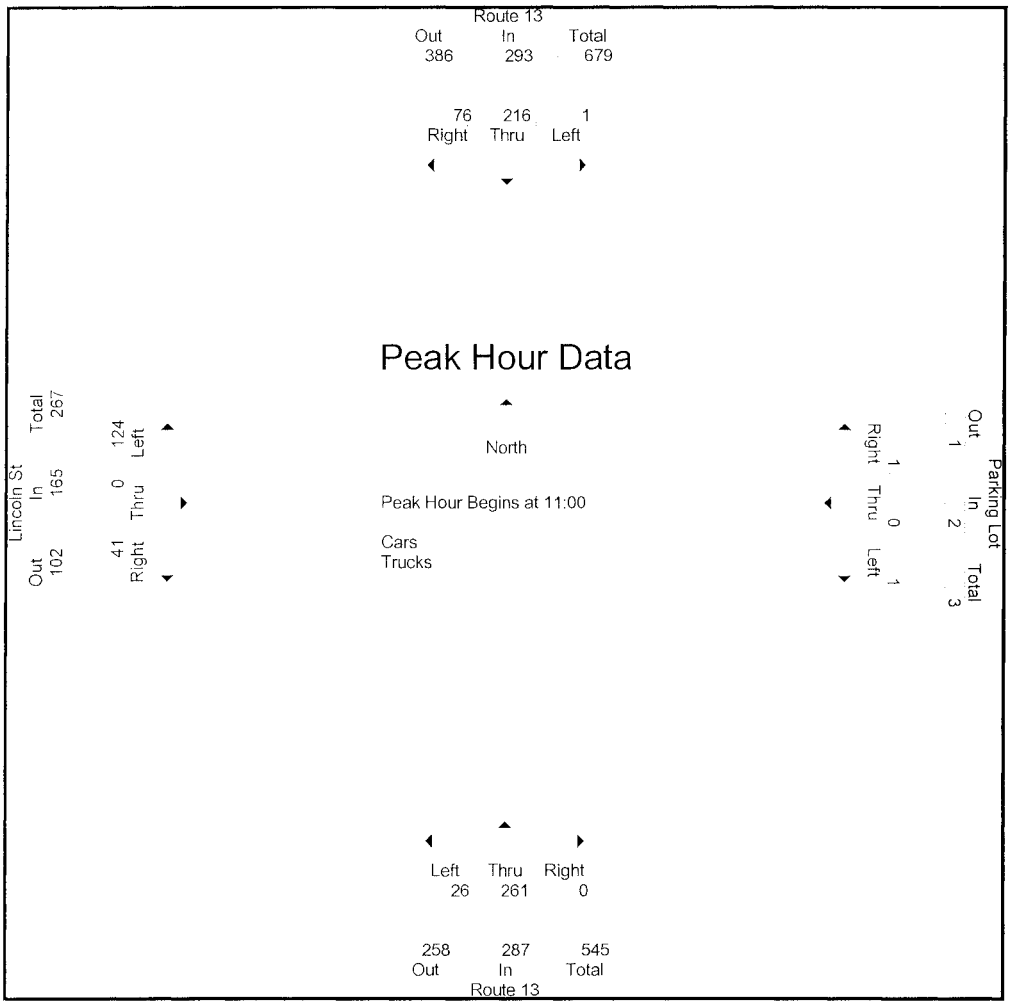

Accurate Counts
978-664-2565

N/S Street : Route 13
E/W Street: Lincoln Street
City/State : Milford, NH
Weather : Rain

File Name : 517840B5
Site Code : 51784005
Start Date : 5/13/2006
Page No : 1

	Route 13 From North				Parking Lot From East				Route 13 From South				Lincoln St From West				
Start Time	Left	Thru	Right	App. Total	Left	Thru	Right	App. Total	Left	Thru	Right	App. Total	Left	Thru	Right	App. Total	Int. Total
Peak Hour Analysis From 10:00 to 11:45 - Peak 1 of 1																	
Peak Hour for Entire Intersection Begins at 11:00																	
11:00	0	47	**21**	68	0	0	0	0	6	72	0	**78**	25	0	6	31	177
11:15	0	**60**	21	**81**	**1**	0	0	**1**	3	**75**	0	78	26	0	8	34	**194**
11:30	0	56	17	73	0	0	**1**	1	**9**	51	0	60	32	0	**14**	46	180
11:45	**1**	53	17	71	0	0	0	0	7	62	0	69	**41**	0	13	**54**	194
Total Volume	1	216	76	293	1	0	1	2	25	260	0	285	124	0	41	165	745
% App. Total	0.3	73.7	25.9		50	0	50		8.8	91.2	0		75.2	0	24.8		
PHF	.250	.900	.905	.904	.250	.000	.250	.500	.694	.867	.000	.913	.756	.000	.732	.764	.960

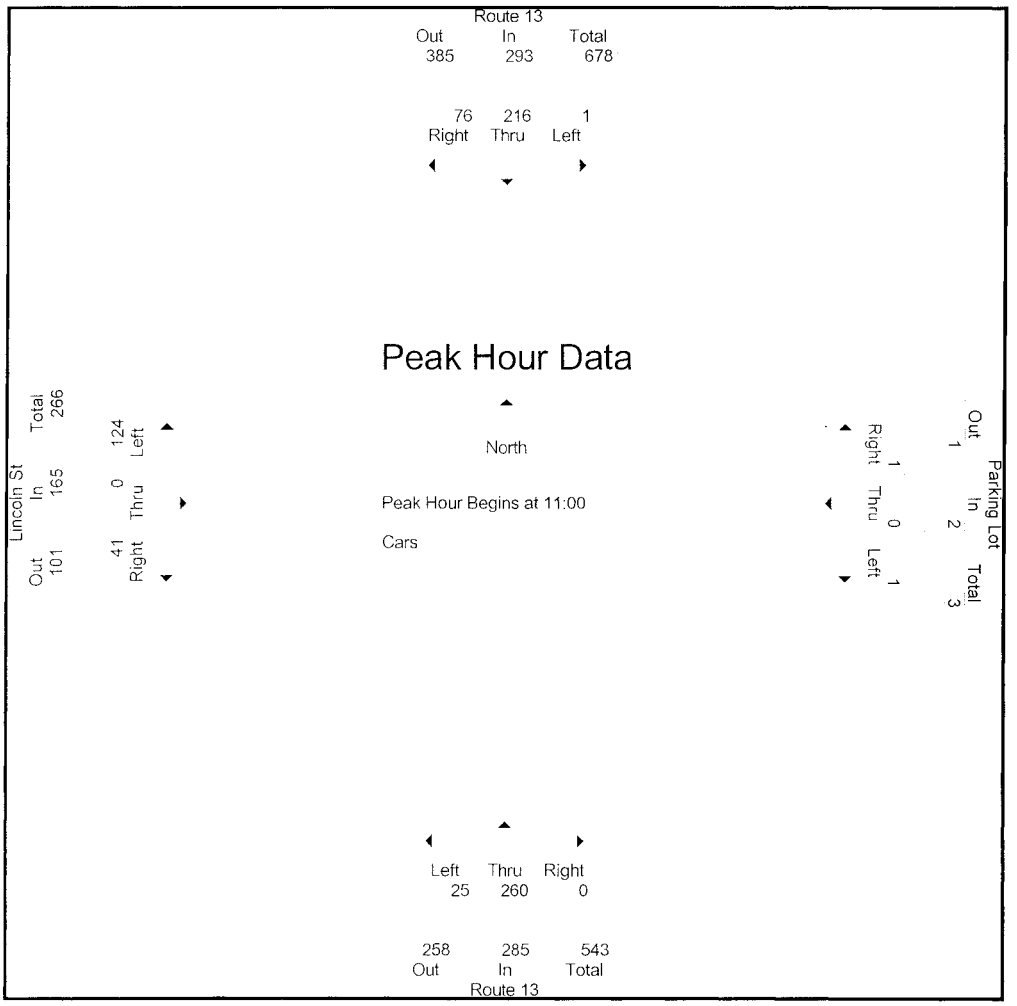

Accurate Counts
978-664-2565

N/S Street : Route 13
E/W Street: Lincoln Street
City/State : Milford, NH
Weather : Rain

File Name : 517840B5
Site Code : 51784005
Start Date : 5/13/2006
Page No : 1

	Route 13 From North				Parking Lot From East				Route 13 From South				Lincoln St From West				
Start Time	Left	Thru	Right	App. Total	Left	Thru	Right	App. Total	Left	Thru	Right	App. Total	Left	Thru	Right	App. Total	Int. Total
Peak Hour Analysis From 10:00 to 11:45 - Peak 1 of 1																	
Peak Hour for Entire Intersection Begins at 10:00																	
10:00	0	0	0	0	0	0	0	0	0	1	0	1	0	0	0	0	1
10:15	0	1	0	1	0	0	0	0	0	0	0	0	0	0	0	0	1
10:30	0	0	0	0	0	0	0	0	0	0	0	0	0	0	0	0	0
10:45	0	1	0	1	0	0	0	0	0	0	0	0	0	0	0	0	1
Total Volume	0	2	0	2	0	0	0	0	0	1	0	1	0	0	0	0	3
% App. Total	0	100	0		0	0	0		0	100	0		0	0	0		
PHF	.000	.500	.000	.500	.000	.000	.000	.000	.000	.250	.000	.250	.000	.000	.000	.000	.750

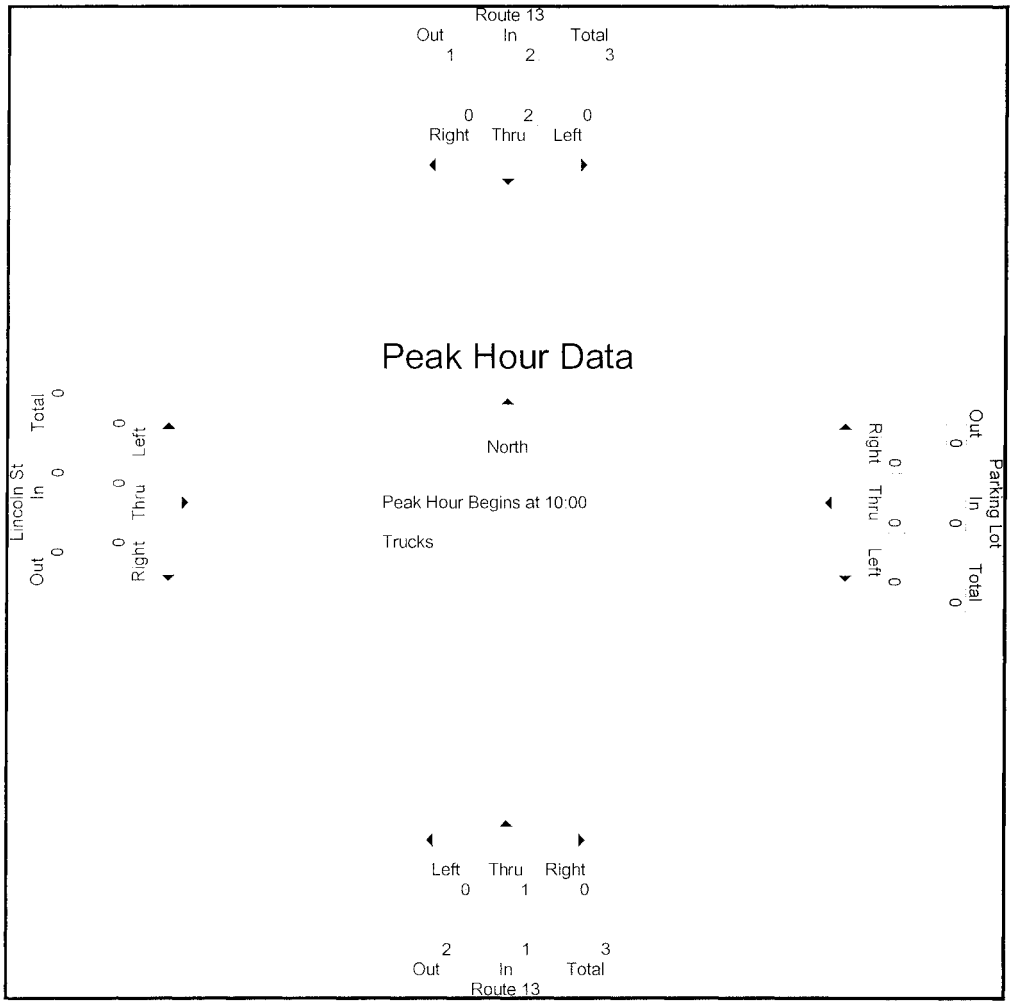

Attachment D-2f

Osgood Road/Mason Road
Intersection

Accurate Counts
978-664-2565

N/S Street : Osgood Road
E/W Street: Mason Road
City/State : Milford, NH
Weather : Rain

File Name : 51784006
Site Code : 51784006
Start Date : 5/2/2006
Page No : 1

Groups Printed- Cars - Trucks

	Osgood Rd From North		Osgood Rd From South		Mason Rd From West		
Start Time	Thru	Right	Left	Thru	Left	Right	Int. Total
07:00	15	2	3	33	34	27	114
07:15	33	19	6	54	65	31	208
07:30	33	22	8	26	25	32	146
07:45	11	17	10	20	11	27	96
Total	92	60	27	133	135	117	564
08:00	9	15	9	19	22	25	99
08:15	16	29	21	23	18	30	137
08:30	18	22	16	20	23	25	124
08:45	9	12	3	18	30	22	94
Total	52	78	49	80	93	102	454
Grand Total	144	138	76	213	228	219	1018
Apprch %	51.1	48.9	26.3	73.7	51	49	
Total %	14.1	13.6	7.5	20.9	22.4	21.5	
Cars	139	120	70	204	211	211	955
% Cars	96.5	87	92.1	95.8	92.5	96.3	93.8
Trucks	5	18	6	9	17	8	63
% Trucks	3.5	13	7.9	4.2	7.5	3.7	6.2

	Osgood Rd From North			Osgood Rd From South			Mason Rd From West			
Start Time	Thru	Right	App. Total	Left	Thru	App. Total	Left	Right	App. Total	Int. Total
Peak Hour Analysis From 07:00 to 08:45 - Peak 1 of 1										
Peak Hour for Entire Intersection Begins at 07:00										
07:00	15	2	17	3	33	36	34	27	61	114
07:15	**33**	19	52	6	**54**	**60**	**65**	31	**96**	**208**
07:30	33	**22**	**55**	8	26	34	25	**32**	57	146
07:45	11	17	28	**10**	20	30	11	27	38	96
Total Volume	92	60	152	27	133	160	135	117	252	564
% App. Total	60.5	39.5		16.9	83.1		53.6	46.4		
PHF	.697	.682	.691	.675	.616	.667	.519	.914	.656	.678

Peak Hour Analysis From 07:00 to 08:45 - Peak 1 of 1
Peak Hour for Each Approach Begins at:

	07:15			07:00			07:00		
+0 mins.	**33**	19	52	3	33	36	34	27	61
+15 mins.	33	**22**	**55**	6	**54**	**60**	**65**	31	**96**
+30 mins.	11	17	28	8	26	34	25	**32**	57
+45 mins.	9	15	24	**10**	20	30	11	27	38
Total Volume	86	73	159	27	133	160	135	117	252
% App. Total	54.1	45.9		16.9	83.1		53.6	46.4	
PHF	.652	.830	.723	.675	.616	.667	.519	.914	.656

Accurate Counts
978-664-2565

N/S Street : Osgood Road
E/W Street: Mason Road
City/State : Milford, NH
Weather : Rain

File Name : 51784006
Site Code : 51784006
Start Date : 5/2/2006
Page No : 1

Groups Printed- Cars

	Osgood Rd From North		Osgood Rd From South		Mason Rd From West		
Start Time	Thru	Right	Left	Thru	Left	Right	Int. Total
07:00	14	2	2	32	32	27	109
07:15	32	19	6	52	64	28	201
07:30	31	21	5	26	25	30	138
07:45	11	17	9	20	11	27	95
Total	88	59	22	130	132	112	543
08:00	9	13	9	18	22	24	95
08:15	15	15	20	22	17	29	118
08:30	18	21	16	18	23	24	120
08:45	9	12	3	16	17	22	79
Total	51	61	48	74	79	99	412
Grand Total	139	120	70	204	211	211	955
Apprch %	53.7	46.3	25.5	74.5	50	50	
Total %	14.6	12.6	7.3	21.4	22.1	22.1	

	Osgood Rd From North			Osgood Rd From South			Mason Rd From West			
Start Time	Thru	Right	App. Total	Left	Thru	App. Total	Left	Right	App. Total	Int. Total
Peak Hour Analysis From 07:00 to 08:45 - Peak 1 of 1										
Peak Hour for Entire Intersection Begins at 07:00										
07:00	14	2	16	2	32	34	32	27	59	109
07:15	**32**	19	51	6	**52**	**58**	**64**	28	**92**	**201**
07:30	31	**21**	**52**	5	26	31	25	**30**	55	138
07:45	11	17	28	**9**	20	29	11	27	38	95
Total Volume	88	59	147	22	130	152	132	112	244	543
% App. Total	59.9	40.1		14.5	85.5		54.1	45.9		
PHF	.688	.702	.707	.611	.625	.655	.516	.933	.663	.675

Peak Hour Analysis From 07:00 to 08:45 - Peak 1 of 1
Peak Hour for Each Approach Begins at:

	07:15			07:00			07:00		
+0 mins.	**32**	19	51	2	32	34	32	27	59
+15 mins.	31	**21**	**52**	6	**52**	**58**	**64**	28	**92**
+30 mins.	11	17	28	5	26	31	25	**30**	55
+45 mins.	9	13	22	**9**	20	29	11	27	38
Total Volume	83	70	153	22	130	152	132	112	244
% App. Total	54.2	45.8		14.5	85.5		54.1	45.9	
PHF	.648	.833	.736	.611	.625	.655	.516	.933	.663

Accurate Counts
978-664-2565

N/S Street : Osgood Road
E/W Street: Mason Road
City/State : Milford, NH
Weather : Rain

File Name : 51784006
Site Code : 51784006
Start Date : 5/2/2006
Page No : 1

Groups Printed- Trucks

	Osgood Rd From North		Osgood Rd From South		Mason Rd From West		
Start Time	Thru	Right	Left	Thru	Left	Right	Int. Total
07:00	1	0	1	1	2	0	5
07:15	1	0	0	2	1	3	7
07:30	2	1	3	0	0	2	8
07:45	0	0	1	0	0	0	1
Total	4	1	5	3	3	5	21
08:00	0	2	0	1	0	1	4
08:15	1	14	1	1	1	1	19
08:30	0	1	0	2	0	1	4
08:45	0	0	0	2	13	0	15
Total	1	17	1	6	14	3	42
Grand Total	5	18	6	9	17	8	63
Apprch %	21.7	78.3	40	60	68	32	
Total %	7.9	28.6	9.5	14.3	27	12.7	

	Osgood Rd From North			Osgood Rd From South			Mason Rd From West			
Start Time	Thru	Right	App. Total	Left	Thru	App. Total	Left	Right	App. Total	Int. Total
Peak Hour Analysis From 07:00 to 08:45 - Peak 1 of 1										
Peak Hour for Entire Intersection Begins at 08:00										
08:00	0	2	2	0	1	1	0	**1**	1	4
08:15	**1**	**14**	**15**	**1**	1	**2**	1	1	2	**19**
08:30	0	1	1	0	**2**	2	0	1	1	4
08:45	0	0	0	0	2	2	**13**	0	**13**	15
Total Volume	1	17	18	1	6	7	14	3	17	42
% App. Total	5.6	94.4		14.3	85.7		82.4	17.6		
PHF	.250	.304	.300	.250	.750	.875	.269	.750	.327	.553

Peak Hour Analysis From 07:00 to 08:45 - Peak 1 of 1
Peak Hour for Each Approach Begins at:

	07:30			07:00			08:00		
+0 mins.	**2**	1	3	1	1	2	0	**1**	1
+15 mins.	0	0	0	0	**2**	2	1	1	2
+30 mins.	0	2	2	**3**	0	**3**	0	1	1
+45 mins.	1	**14**	**15**	1	0	1	**13**	0	**13**
Total Volume	3	17	20	5	3	8	14	3	17
% App. Total	15	85		62.5	37.5		82.4	17.6	
PHF	.375	.304	.333	.417	.375	.667	.269	.750	.327

Accurate Counts
978-664-2565

N/S Street : Osgood Road
E/W Street: Mason Road
City/State : Milford, NH
Weather : Rain

File Name : 51784006
Site Code : 51784006
Start Date : 5/2/2006
Page No : 1

	Osgood Rd From North			Osgood Rd From South			Mason Rd From West			
Start Time	Thru	Right	App. Total	Left	Thru	App. Total	Left	Right	App. Total	Int. Total
Peak Hour Analysis From 07:00 to 08:45 - Peak 1 of 1										
Peak Hour for Entire Intersection Begins at 07:00										
07:00	15	2	17	3	33	36	34	27	61	114
07:15	**33**	19	52	6	**54**	**60**	**65**	31	**96**	**208**
07:30	33	**22**	**55**	8	26	34	25	**32**	57	146
07:45	11	17	28	**10**	20	30	11	27	38	96
Total Volume	92	60	152	27	133	160	135	117	252	564
% App. Total	60.5	39.5		16.9	83.1		53.6	46.4		
PHF	.697	.682	.691	.675	.616	.667	.519	.914	.656	.678

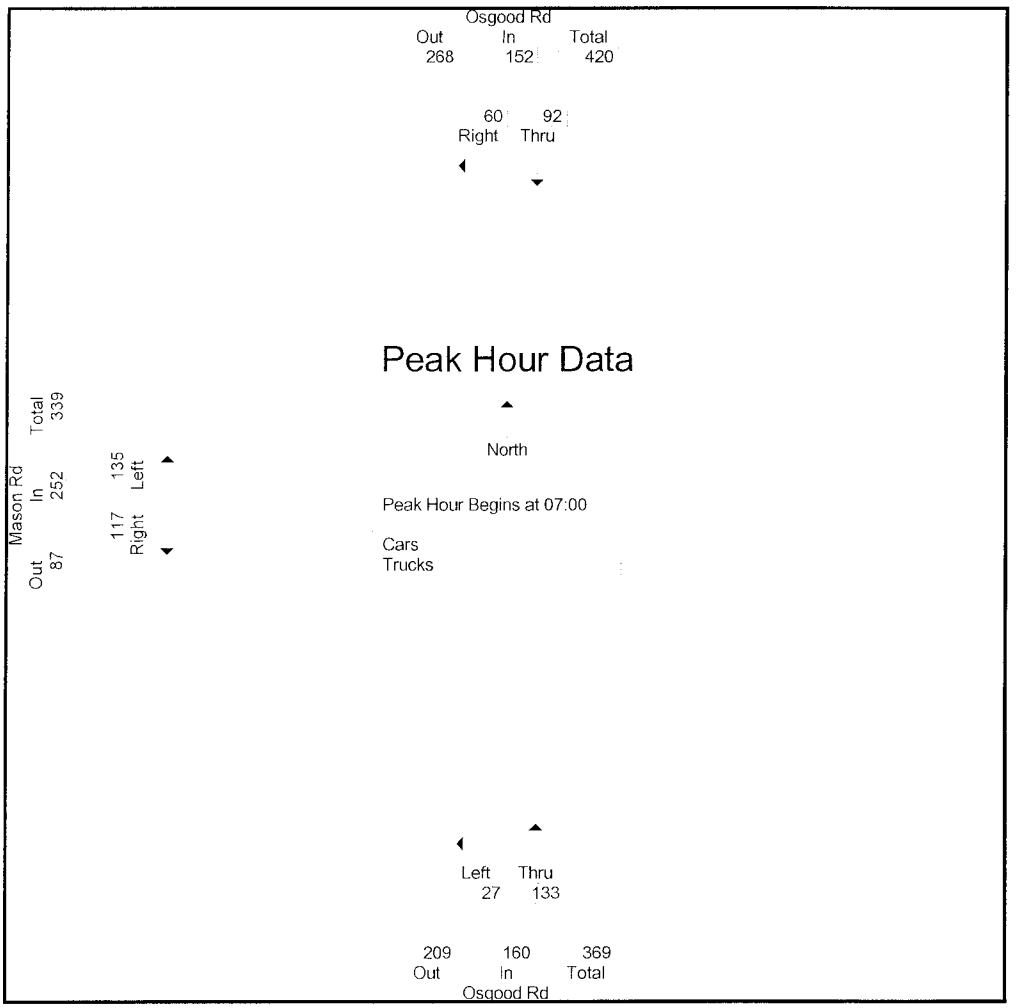

Accurate Counts
978-664-2565

N/S Street : Osgood Road
E/W Street: Mason Road
City/State : Milford, NH
Weather : Rain

File Name : 51784006
Site Code : 51784006
Start Date : 5/2/2006
Page No : 1

	Osgood Rd From North			Osgood Rd From South			Mason Rd From West			
Start Time	Thru	Right	App. Total	Left	Thru	App. Total	Left	Right	App. Total	Int. Total
Peak Hour Analysis From 07:00 to 08:45 - Peak 1 of 1										
Peak Hour for Entire Intersection Begins at 07:00										
07:00	14	2	16	2	32	34	32	27	59	109
07:15	**32**	19	51	6	**52**	**58**	**64**	28	**92**	**201**
07:30	31	**21**	**52**	5	26	31	25	**30**	55	138
07:45	11	17	28	**9**	20	29	11	27	38	95
Total Volume	88	59	147	22	130	152	132	112	244	543
% App. Total	59.9	40.1		14.5	85.5		54.1	45.9		
PHF	.688	.702	.707	.611	.625	.655	.516	.933	.663	.675

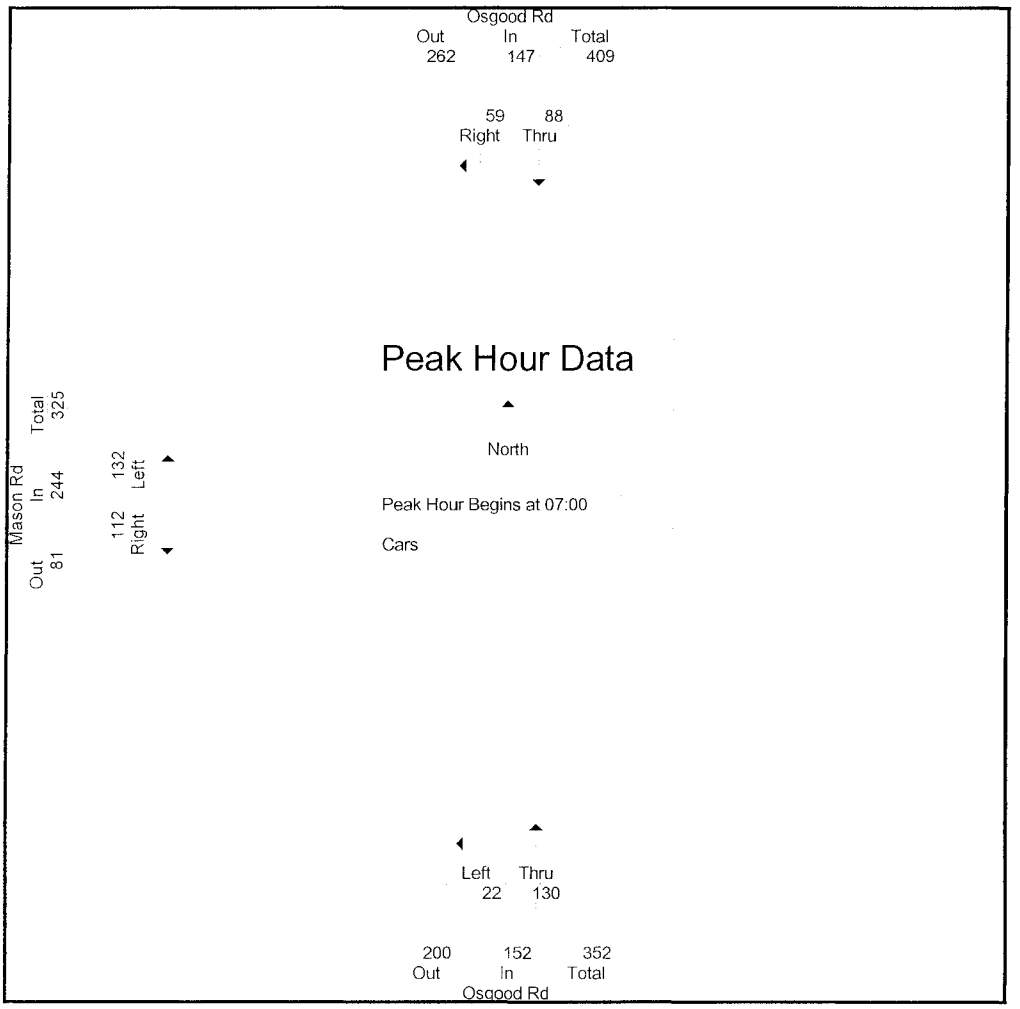

Accurate Counts
978-664-2565

N/S Street : Osgood Road
E/W Street: Mason Road
City/State : Milford, NH
Weather : Rain

File Name : 51784006
Site Code : 51784006
Start Date : 5/2/2006
Page No : 1

	Osgood Rd From North			Osgood Rd From South			Mason Rd From West			
Start Time	Thru	Right	App. Total	Left	Thru	App. Total	Left	Right	App. Total	Int. Total
Peak Hour Analysis From 07:00 to 08:45 - Peak 1 of 1										
Peak Hour for Entire Intersection Begins at 08:00										
08:00	0	2	2	0	1	1	0	**1**	1	4
08:15	**1**	**14**	**15**	**1**	1	**2**	1	1	2	**19**
08:30	0	1	1	0	**2**	2	0	1	1	4
08:45	0	0	0	0	2	2	**13**	0	**13**	15
Total Volume	1	17	18	1	6	7	14	3	17	42
% App. Total	5.6	94.4		14.3	85.7		82.4	17.6		
PHF	.250	.304	.300	.250	.750	.875	.269	.750	.327	.553

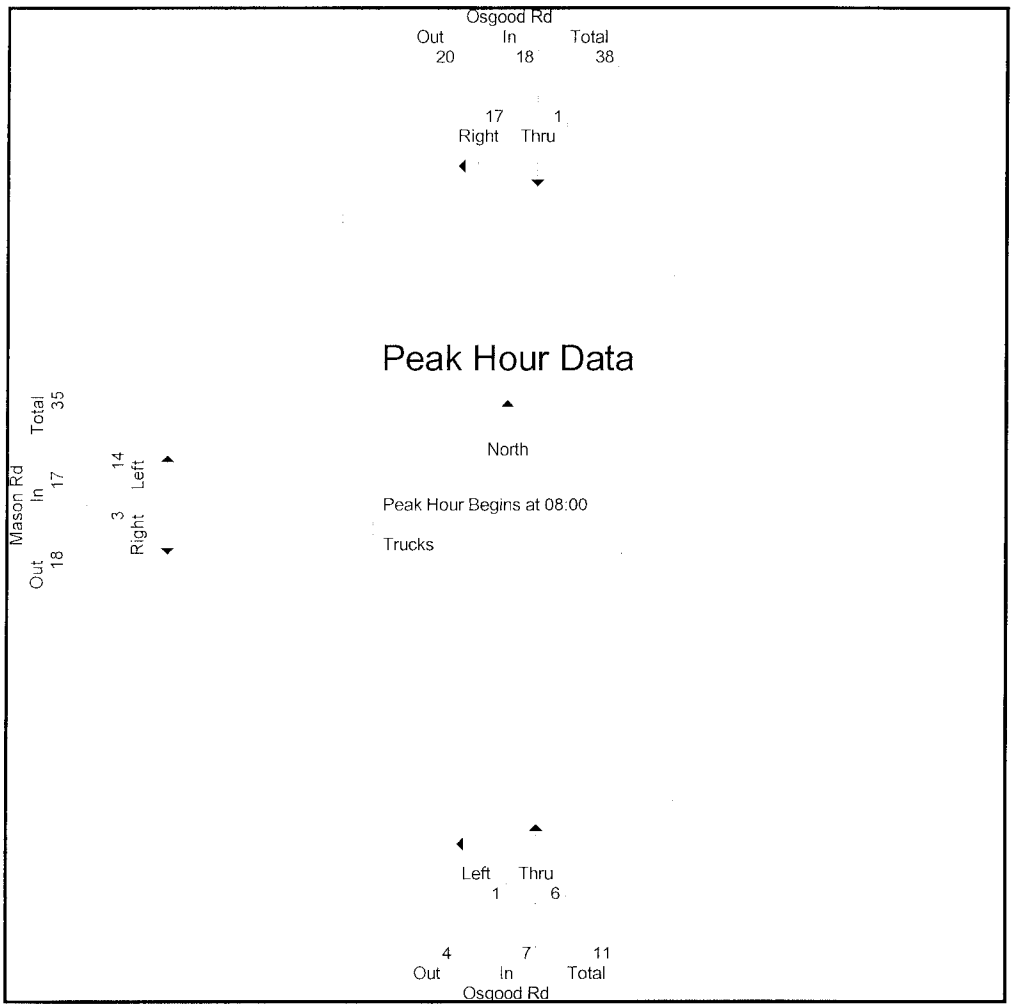

Accurate Counts
978-664-2565

N/S Street : Osgood Road
E/W Street: Mason Road
City/State : Milford, NH
Weather : Rain

File Name : 51784006
Site Code : 51784006
Start Date : 5/2/2006
Page No : 1

Groups Printed- Cars - Trucks

	Osgood Rd From North		Osgood Rd From South		Mason Rd From West		
Start Time	Thru	Right	Left	Thru	Left	Right	Int. Total
16:00	29	24	11	21	14	12	111
16:15	19	19	19	16	17	16	106
16:30	25	17	28	20	13	20	123
16:45	29	14	18	15	15	23	114
Total	102	74	76	72	59	71	454
17:00	32	21	26	24	14	10	127
17:15	27	22	28	12	14	14	117
17:30	23	19	36	15	10	13	116
17:45	22	23	24	20	12	11	112
Total	104	85	114	71	50	48	472
Grand Total	206	159	190	143	109	119	926
Apprch %	56.4	43.6	57.1	42.9	47.8	52.2	
Total %	22.2	17.2	20.5	15.4	11.8	12.9	
Cars	205	159	178	136	103	119	900
% Cars	99.5	100	93.7	95.1	94.5	100	97.2
Trucks	1	0	12	7	6	0	26
% Trucks	0.5	0	6.3	4.9	5.5	0	2.8

	Osgood Rd From North			Osgood Rd From South			Mason Rd From West			
Start Time	Thru	Right	App. Total	Left	Thru	App. Total	Left	Right	App. Total	Int. Total
Peak Hour Analysis From 16:00 to 17:45 - Peak 1 of 1										
Peak Hour for Entire Intersection Begins at 16:30										
16:30	25	17	42	**28**	20	48	13	20	33	123
16:45	29	14	43	18	15	33	**15**	**23**	**38**	114
17:00	**32**	21	**53**	26	**24**	**50**	14	10	24	**127**
17:15	27	**22**	49	28	12	40	14	14	28	117
Total Volume	113	74	187	100	71	171	56	67	123	481
% App. Total	60.4	39.6		58.5	41.5		45.5	54.5		
PHF	.883	.841	.882	.893	.740	.855	.933	.728	.809	.947

Peak Hour Analysis From 16:00 to 17:45 - Peak 1 of 1
Peak Hour for Each Approach Begins at:

	17:00			17:00			16:00		
+0 mins.	**32**	21	**53**	26	**24**	50	14	12	26
+15 mins.	27	22	49	28	12	40	**17**	16	33
+30 mins.	23	19	42	**36**	15	**51**	13	20	33
+45 mins.	22	**23**	45	24	20	44	15	**23**	**38**
Total Volume	104	85	189	114	71	185	59	71	130
% App. Total	55	45		61.6	38.4		45.4	54.6	
PHF	.813	.924	.892	.792	.740	.907	.868	.772	.855

Accurate Counts
978-664-2565

N/S Street : Osgood Road
E/W Street: Mason Road
City/State : Milford, NH
Weather : Rain

File Name : 51784006
Site Code : 51784006
Start Date : 5/2/2006
Page No : 1

Groups Printed- Cars

	Osgood Rd From North		Osgood Rd From South		Mason Rd From West		
Start Time	Thru	Right	Left	Thru	Left	Right	Int. Total
16:00	29	24	9	18	13	12	105
16:15	19	19	19	15	17	16	105
16:30	24	17	28	20	12	20	121
16:45	29	14	16	15	15	23	112
Total	101	74	72	68	57	71	443
17:00	32	21	24	22	14	10	123
17:15	27	22	27	12	13	14	115
17:30	23	19	33	15	8	13	111
17:45	22	23	22	19	11	11	108
Total	104	85	106	68	46	48	457
Grand Total	205	159	178	136	103	119	900
Apprch %	56.3	43.7	56.7	43.3	46.4	53.6	
Total %	22.8	17.7	19.8	15.1	11.4	13.2	

	Osgood Rd From North			Osgood Rd From South			Mason Rd From West			
Start Time	Thru	Right	App. Total	Left	Thru	App. Total	Left	Right	App. Total	Int. Total
Peak Hour Analysis From 16:00 to 17:45 - Peak 1 of 1										
Peak Hour for Entire Intersection Begins at 16:30										
16:30	24	17	41	**28**	20	**48**	12	20	32	121
16:45	29	14	43	16	15	31	**15**	**23**	**38**	112
17:00	**32**	21	**53**	24	**22**	46	14	10	24	**123**
17:15	27	**22**	49	27	12	39	13	14	27	115
Total Volume	112	74	186	95	69	164	54	67	121	471
% App. Total	60.2	39.8		57.9	42.1		44.6	55.4		
PHF	.875	.841	.877	.848	.784	.854	.900	.728	.796	.957

Peak Hour Analysis From 16:00 to 17:45 - Peak 1 of 1
Peak Hour for Each Approach Begins at:

	17:00			17:00			16:00		
+0 mins.	**32**	21	**53**	24	**22**	46	13	12	25
+15 mins.	27	22	49	27	12	39	**17**	16	33
+30 mins.	23	19	42	**33**	15	**48**	12	20	32
+45 mins.	22	**23**	45	22	19	41	15	**23**	**38**
Total Volume	104	85	189	106	68	174	57	71	128
% App. Total	55	45		60.9	39.1		44.5	55.5	
PHF	.813	.924	.892	.803	.773	.906	.838	.772	.842

Accurate Counts
978-664-2565

N/S Street : Osgood Road
E/W Street: Mason Road
City/State : Milford, NH
Weather : Rain

File Name : 51784006
Site Code : 51784006
Start Date : 5/2/2006
Page No : 1

Groups Printed- Trucks

	Osgood Rd From North		Osgood Rd From South		Mason Rd From West		
Start Time	Thru	Right	Left	Thru	Left	Right	Int. Total
16:00	0	0	2	3	1	0	6
16:15	0	0	0	1	0	0	1
16:30	1	0	0	0	1	0	2
16:45	0	0	2	0	0	0	2
Total	1	0	4	4	2	0	11
17:00	0	0	2	2	0	0	4
17:15	0	0	1	0	1	0	2
17:30	0	0	3	0	2	0	5
17:45	0	0	2	1	1	0	4
Total	0	0	8	3	4	0	15
Grand Total	1	0	12	7	6	0	26
Apprch %	100	0	63.2	36.8	100	0	
Total %	3.8	0	46.2	26.9	23.1	0	

	Osgood Rd From North			Osgood Rd From South			Mason Rd From West			
Start Time	Thru	Right	App. Total	Left	Thru	App. Total	Left	Right	App. Total	Int. Total
Peak Hour Analysis From 16:00 to 17:45 - Peak 1 of 1										
Peak Hour for Entire Intersection Begins at 17:00										
17:00	0	0	0	2	**2**	**4**	0	0	0	4
17:15	0	0	0	1	0	1	1	0	1	2
17:30	0	0	0	**3**	0	3	**2**	0	**2**	**5**
17:45	0	0	0	2	1	3	1	0	1	4
Total Volume	0	0	0	8	3	11	4	0	4	15
% App. Total	0	0		72.7	27.3		100	0		
PHF	.000	.000	.000	.667	.375	.688	.500	.000	.500	.750

Peak Hour Analysis From 16:00 to 17:45 - Peak 1 of 1
Peak Hour for Each Approach Begins at:

	16:00			17:00			17:00		
+0 mins.	0	0	0	2	**2**	**4**	0	0	0
+15 mins.	0	0	0	1	0	1	1	0	1
+30 mins.	**1**	0	**1**	**3**	0	3	**2**	0	**2**
+45 mins.	0	0	0	2	1	3	1	0	1
Total Volume	1	0	1	8	3	11	4	0	4
% App. Total	100	0		72.7	27.3		100	0	
PHF	.250	.000	.250	.667	.375	.688	.500	.000	.500

Accurate Counts
978-664-2565

N/S Street : Osgood Road
E/W Street: Mason Road
City/State : Milford, NH
Weather : Rain

File Name : 51784006
Site Code : 51784006
Start Date : 5/2/2006
Page No : 1

	Osgood Rd From North			Osgood Rd From South			Mason Rd From West			
Start Time	Thru	Right	App. Total	Left	Thru	App. Total	Left	Right	App. Total	Int. Total
Peak Hour Analysis From 16:00 to 17:45 - Peak 1 of 1										
Peak Hour for Entire Intersection Begins at 16:30										
16:30	25	17	42	**28**	20	48	13	20	33	123
16:45	29	14	43	18	15	33	**15**	**23**	**38**	114
17:00	**32**	21	**53**	26	**24**	**50**	14	10	24	**127**
17:15	27	**22**	49	28	12	40	14	14	28	117
Total Volume	113	74	187	100	71	171	56	67	123	481
% App. Total	60.4	39.6		58.5	41.5		45.5	54.5		
PHF	.883	841	.882	.893	.740	.855	.933	.728	.809	.947

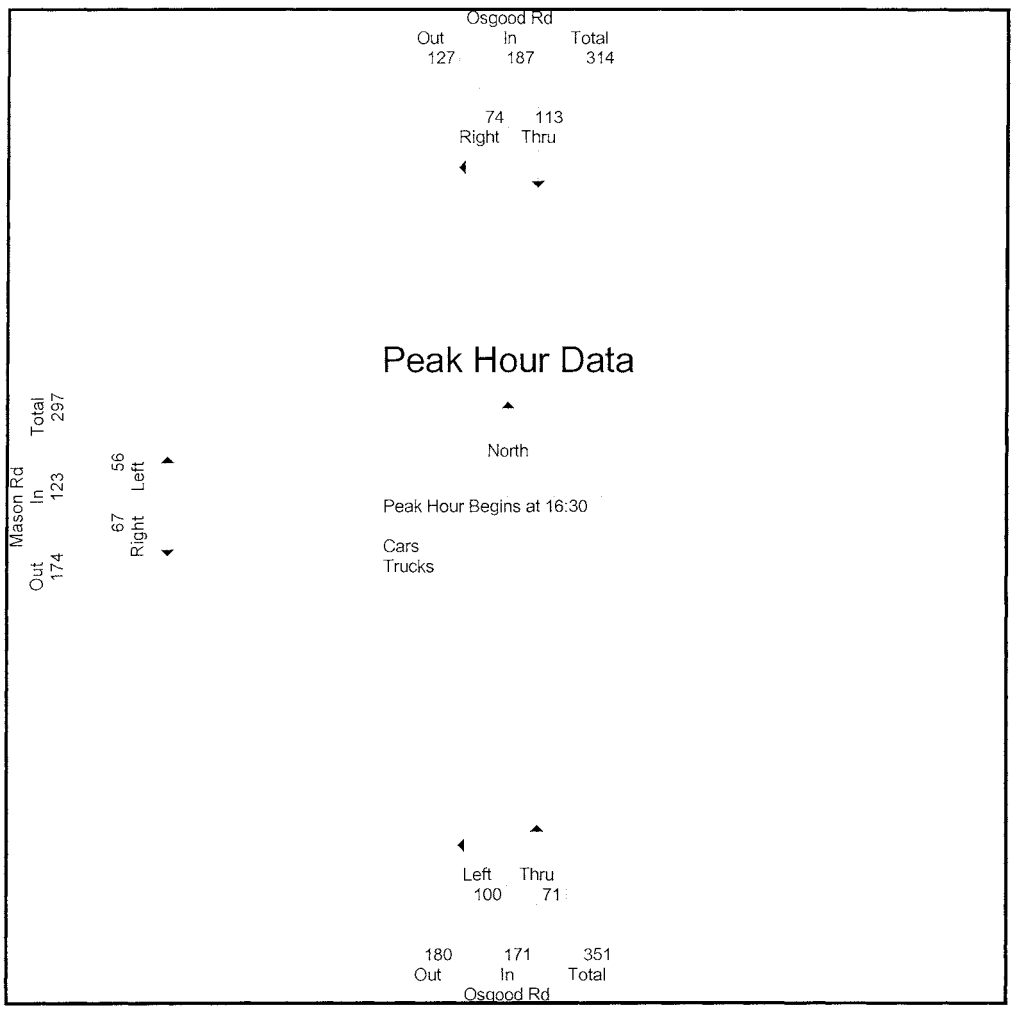

Accurate Counts
978-664-2565

N/S Street : Osgood Road
E/W Street: Mason Road
City/State : Milford, NH
Weather : Rain

File Name : 51784006
Site Code : 51784006
Start Date : 5/2/2006
Page No : 1

	Osgood Rd From North			Osgood Rd From South			Mason Rd From West			
Start Time	Thru	Right	App. Total	Left	Thru	App. Total	Left	Right	App. Total	Int. Total
Peak Hour Analysis From 16:00 to 17:45 - Peak 1 of 1										
Peak Hour for Entire Intersection Begins at 16:30										
16:30	24	17	41	**28**	20	**48**	12	20	32	121
16:45	29	14	43	16	15	31	**15**	**23**	**38**	112
17:00	**32**	21	**53**	24	**22**	46	14	10	24	**123**
17:15	27	**22**	49	27	12	39	13	14	27	115
Total Volume	112	74	186	95	69	164	54	67	121	471
% App. Total	60.2	39.8		57.9	42.1		44.6	55.4		
PHF	.875	.841	.877	.848	.784	.854	.900	.728	.796	.957

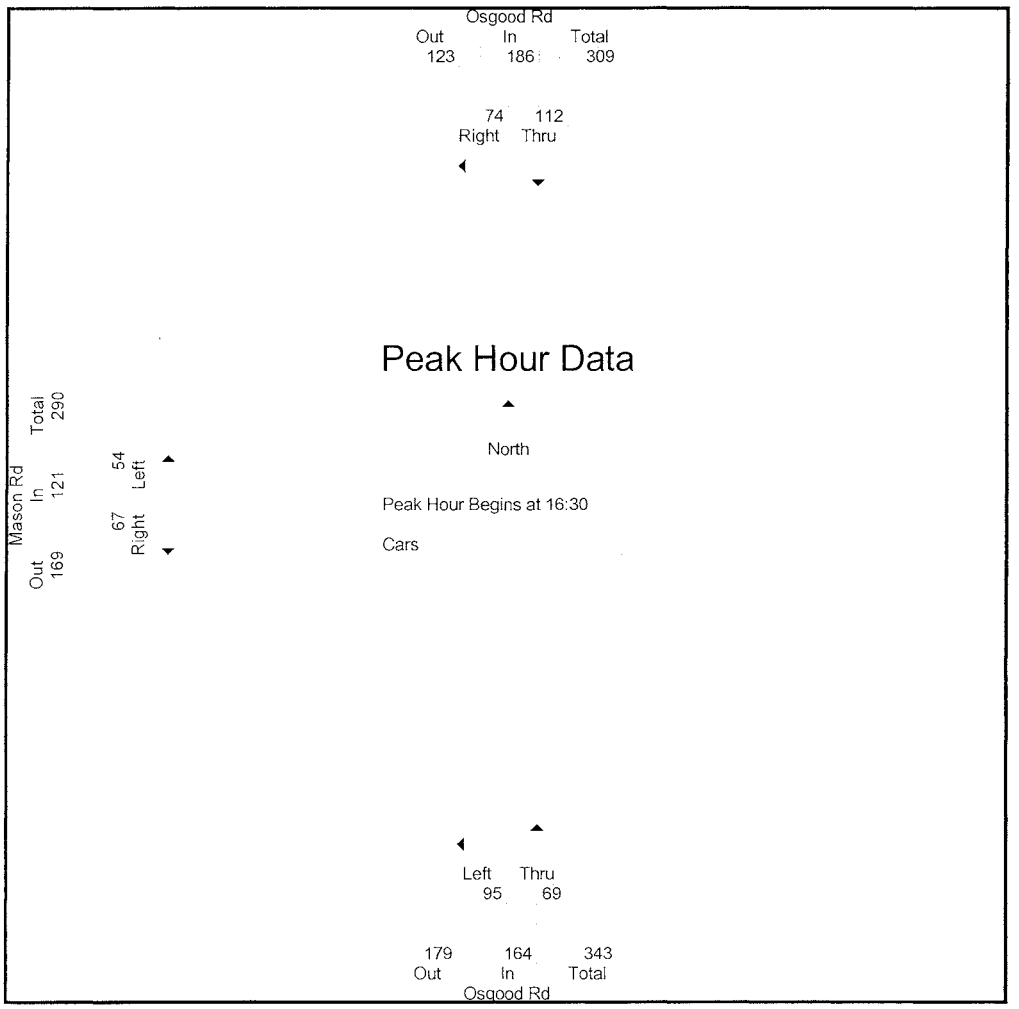

Accurate Counts
978-664-2565

N/S Street : Osgood Road
E/W Street: Mason Road
City/State : Milford, NH
Weather : Rain

File Name : 51784006
Site Code : 51784006
Start Date : 5/2/2006
Page No : 1

	Osgood Rd From North			Osgood Rd From South			Mason Rd From West			
Start Time	Thru	Right	App. Total	Left	Thru	App. Total	Left	Right	App. Total	Int. Total
Peak Hour Analysis From 16:00 to 17:45 - Peak 1 of 1										
Peak Hour for Entire Intersection Begins at 17:00										
17:00	0	0	0	2	**2**	**4**	0	0	0	4
17:15	0	0	0	1	0	1	1	0	1	2
17:30	0	0	0	**3**	0	3	**2**	0	**2**	**5**
17:45	0	0	0	2	1	3	1	0	1	4
Total Volume	0	0	0	8	3	11	4	0	4	15
% App. Total	0	0		72.7	27.3		100	0		
PHF	.000	.000	.000	.667	.375	.688	.500	.000	.500	.750

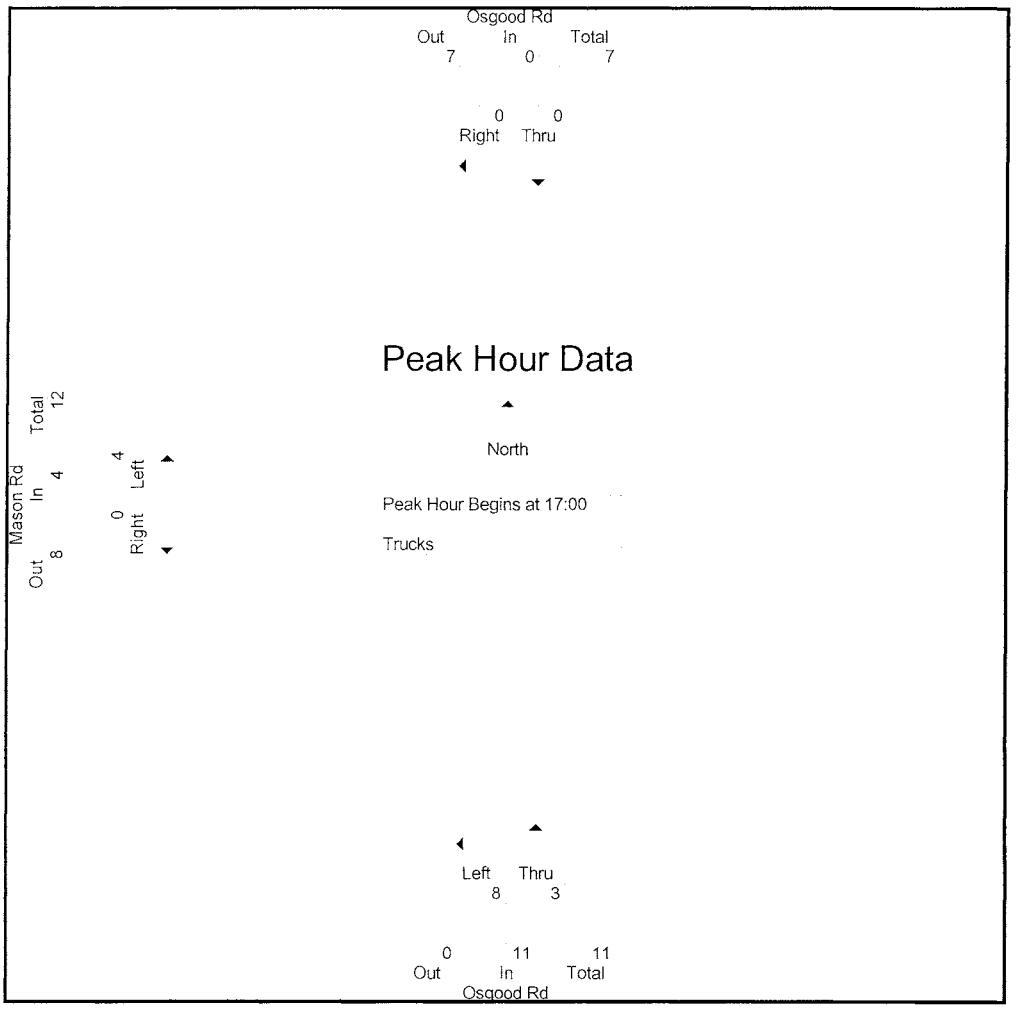

Accurate Counts
978-664-2565

N/S Street : Osgood Road
E/W Street: Mason Road
City/State : Milford, NH
Weather : Rain

File Name : 517840A6
Site Code : 51784006
Start Date : 5/13/2006
Page No : 1

Groups Printed- Cars - Trucks

	Osgood Rd From North		Osgood Rd From South		Mason Rd From West		
Start Time	Thru	Right	Left	Thru	Left	Right	Int. Total
10:00	12	0	6	14	4	11	47
10:15	17	3	8	14	10	12	64
10:30	22	8	11	22	10	12	85
10:45	15	19	11	22	20	13	100
Total	66	30	36	72	44	48	296
11:00	16	7	7	19	22	17	88
11:15	14	12	8	13	17	10	74
11:30	13	11	15	15	9	15	78
11:45	20	12	17	14	14	7	84
Total	63	42	47	61	62	49	324
12:00	15	7	15	24	12	24	97
12:15	16	10	11	22	14	10	83
12:30	16	16	15	22	15	7	91
12:45	20	10	11	9	7	13	70
Total	67	43	52	77	48	54	341
13:00	13	2	8	9	6	9	47
13:15	31	20	10	25	12	22	120
13:30	13	15	5	24	22	26	105
13:45	23	13	18	20	19	13	106
Total	80	50	41	78	59	70	378
Grand Total	276	165	176	288	213	221	1339
Apprch %	62.6	37.4	37.9	62.1	49.1	50.9	
Total %	20.6	12.3	13.1	21.5	15.9	16.5	
Cars	274	164	175	284	212	217	1326
% Cars	99.3	99.4	99.4	98.6	99.5	98.2	99
Trucks	2	1	1	4	1	4	13
% Trucks	0.7	0.6	0.6	1.4	0.5	1.8	1

	Osgood Rd From North			Osgood Rd From South			Mason Rd From West			
Start Time	Thru	Right	App. Total	Left	Thru	App. Total	Left	Right	App. Total	Int. Total
Peak Hour Analysis From 10:00 to 13:45 - Peak 1 of 1										
Peak Hour for Entire Intersection Begins at 13:00										
13:00	13	2	15	8	9	17	6	9	15	47
13:15	**31**	**20**	**51**	10	**25**	35	12	22	34	**120**
13:30	13	15	28	5	24	29	**22**	**26**	**48**	105
13:45	23	13	36	**18**	20	**38**	19	13	32	106
Total Volume	80	50	130	41	78	119	59	70	129	378
% App. Total	61.5	38.5		34.5	65.5		45.7	54.3		
PHF	.645	.625	.637	.569	.780	.783	.670	.673	.672	.788

Peak Hour Analysis From 10:00 to 13:45 - Peak 1 of 1
Peak Hour for Each Approach Begins at:

	13:00			11:45			13:00		
+0 mins	13	2	15	**17**	14	31	6	9	15
+15 mins.	**31**	**20**	**51**	15	**24**	**39**	12	22	34
+30 mins.	13	15	28	11	22	33	**22**	**26**	**48**
+45 mins.	23	13	36	15	22	37	19	13	32
Total Volume	80	50	130	58	82	140	59	70	129
% App. Total	61.5	38.5		41.4	58.6		45.7	54.3	
PHF	.645	.625	.637	.853	.854	.897	.670	.673	.672

Accurate Counts
978-664-2565

N/S Street : Osgood Road
E/W Street: Mason Road
City/State : Milford, NH
Weather : Rain

File Name : 517840A6
Site Code : 51784006
Start Date : 5/13/2006
Page No : 1

Groups Printed- Cars

	Osgood Rd From North		Osgood Rd From South		Mason Rd From West		
Start Time	Thru	Right	Left	Thru	Left	Right	Int. Total
10:00	12	0	6	14	4	11	47
10:15	17	3	7	14	10	12	63
10:30	22	8	11	22	9	12	84
10:45	14	19	11	21	20	12	97
Total	65	30	35	71	43	47	291
11:00	16	7	7	18	22	17	87
11:15	14	12	8	13	17	9	73
11:30	12	11	15	14	9	15	76
11:45	20	12	17	14	14	7	84
Total	62	42	47	59	62	48	320
12:00	15	6	15	24	12	24	96
12:15	16	10	11	22	14	10	83
12:30	16	16	15	22	15	6	90
12:45	20	10	11	8	7	13	69
Total	67	42	52	76	48	53	338
13:00	13	2	8	9	6	9	47
13:15	31	20	10	25	12	22	120
13:30	13	15	5	24	22	25	104
13:45	23	13	18	20	19	13	106
Total	80	50	41	78	59	69	377
Grand Total	274	164	175	284	212	217	1326
Apprch %	62.6	37.4	38.1	61.9	49.4	50.6	
Total %	20.7	12.4	13.2	21.4	16	16.4	

	Osgood Rd From North			Osgood Rd From South			Mason Rd From West			
Start Time	Thru	Right	App. Total	Left	Thru	App. Total	Left	Right	App. Total	Int. Total
Peak Hour Analysis From 10:00 to 13:45 - Peak 1 of 1										
Peak Hour for Entire Intersection Begins at 13:00										
13:00	13	2	15	8	9	17	6	9	15	47
13:15	**31**	**20**	**51**	10	**25**	35	12	22	34	**120**
13:30	13	15	28	5	24	29	**22**	**25**	**47**	104
13:45	23	13	36	**18**	20	**38**	19	13	32	106
Total Volume	80	50	130	41	78	119	59	69	128	377
% App. Total	61.5	38.5		34.5	65.5		46.1	53.9		
PHF	.645	.625	.637	.569	.780	.783	.670	.690	.681	.785

Peak Hour Analysis From 10:00 to 13:45 - Peak 1 of 1
Peak Hour for Each Approach Begins at:

	13:00			11:45			13:00		
+0 mins.	13	2	15	**17**	14	31	6	9	15
+15 mins.	**31**	**20**	**51**	15	**24**	**39**	12	22	34
+30 mins.	13	15	28	11	22	33	**22**	**25**	**47**
+45 mins.	23	13	36	15	22	37	19	13	32
Total Volume	80	50	130	58	82	140	59	69	128
% App. Total	61.5	38.5		41.4	58.6		46.1	53.9	
PHF	.645	.625	.637	.853	.854	.897	.670	.690	.681

Accurate Counts
978-664-2565

N/S Street : Osgood Road
E/W Street: Mason Road
City/State : Milford, NH
Weather : Rain

File Name : 517840A6
Site Code : 51784006
Start Date : 5/13/2006
Page No : 1

Groups Printed- Trucks

	Osgood Rd From North		Osgood Rd From South		Mason Rd From West		
Start Time	Thru	Right	Left	Thru	Left	Right	Int. Total
10:00	0	0	0	0	0	0	0
10:15	0	0	1	0	0	0	1
10:30	0	0	0	0	1	0	1
10:45	1	0	0	1	0	1	3
Total	1	0	1	1	1	1	5
11:00	0	0	0	1	0	0	1
11:15	0	0	0	0	0	1	1
11:30	1	0	0	1	0	0	2
11:45	0	0	0	0	0	0	0
Total	1	0	0	2	0	1	4
12:00	0	1	0	0	0	0	1
12:15	0	0	0	0	0	0	0
12:30	0	0	0	0	0	1	1
12:45	0	0	0	1	0	0	1
Total	0	1	0	1	0	1	3
13:00	0	0	0	0	0	0	0
13:15	0	0	0	0	0	0	0
13:30	0	0	0	0	0	1	1
13:45	0	0	0	0	0	0	0
Total	0	0	0	0	0	1	1
Grand Total	2	1	1	4	1	4	13
Apprch %	66.7	33.3	20	80	20	80	
Total %	15.4	7.7	7.7	30.8	7.7	30.8	

	Osgood Rd From North			Osgood Rd From South			Mason Rd From West			
Start Time	Thru	Right	App. Total	Left	Thru	App. Total	Left	Right	App. Total	Int. Total
Peak Hour Analysis From 10:00 to 13:45 - Peak 1 of 1										
Peak Hour for Entire Intersection Begins at 10:45										
10:45	**1**	0	**1**	0	**1**	**1**	0	**1**	**1**	**3**
11:00	0	0	0	0	1	1	0	0	0	1
11:15	0	0	0	0	0	0	0	1	1	1
11:30	1	0	1	0	1	1	0	0	0	2
Total Volume	2	0	2	0	3	3	0	2	2	7
% App. Total	100	0		0	100		0	100		
PHF	.500	.000	.500	.000	.750	.750	.000	.500	.500	.583

Peak Hour Analysis From 10:00 to 13:45 - Peak 1 of 1
Peak Hour for Each Approach Begins at:

	10:45			10:15			10:30		
+0 mins.	**1**	0	**1**	**1**	0	**1**	**1**	0	**1**
+15 mins.	0	0	0	0	0	0	0	**1**	1
+30 mins.	0	0	0	0	**1**	1	0	0	0
+45 mins.	1	0	1	0	1	1	0	1	1
Total Volume	2	0	2	1	2	3	1	2	3
% App. Total	100	0		33.3	66.7		33.3	66.7	
PHF	.500	.000	.500	.250	.500	.750	.250	.500	.750

Accurate Counts
978-664-2565

N/S Street : Osgood Road
E/W Street: Mason Road
City/State : Milford, NH
Weather : Rain

File Name : 517840A6
Site Code : 51784006
Start Date : 5/13/2006
Page No : 1

	Osgood Rd From North			Osgood Rd From South			Mason Rd From West			
Start Time	Thru	Right	App. Total	Left	Thru	App. Total	Left	Right	App. Total	Int. Total
Peak Hour Analysis From 10:00 to 13:45 - Peak 1 of 1										
Peak Hour for Entire Intersection Begins at 13:00										
13:00	13	2	15	8	9	17	6	9	15	47
13:15	**31**	**20**	**51**	10	**25**	35	12	22	34	**120**
13:30	13	15	28	5	24	29	**22**	**26**	**48**	105
13:45	23	13	36	**18**	20	**38**	19	13	32	106
Total Volume	80	50	130	41	78	119	59	70	129	378
% App. Total	61.5	38.5		34.5	65.5		45.7	54.3		
PHF	.645	625	.637	.569	.780	.783	.670	.673	.672	.788

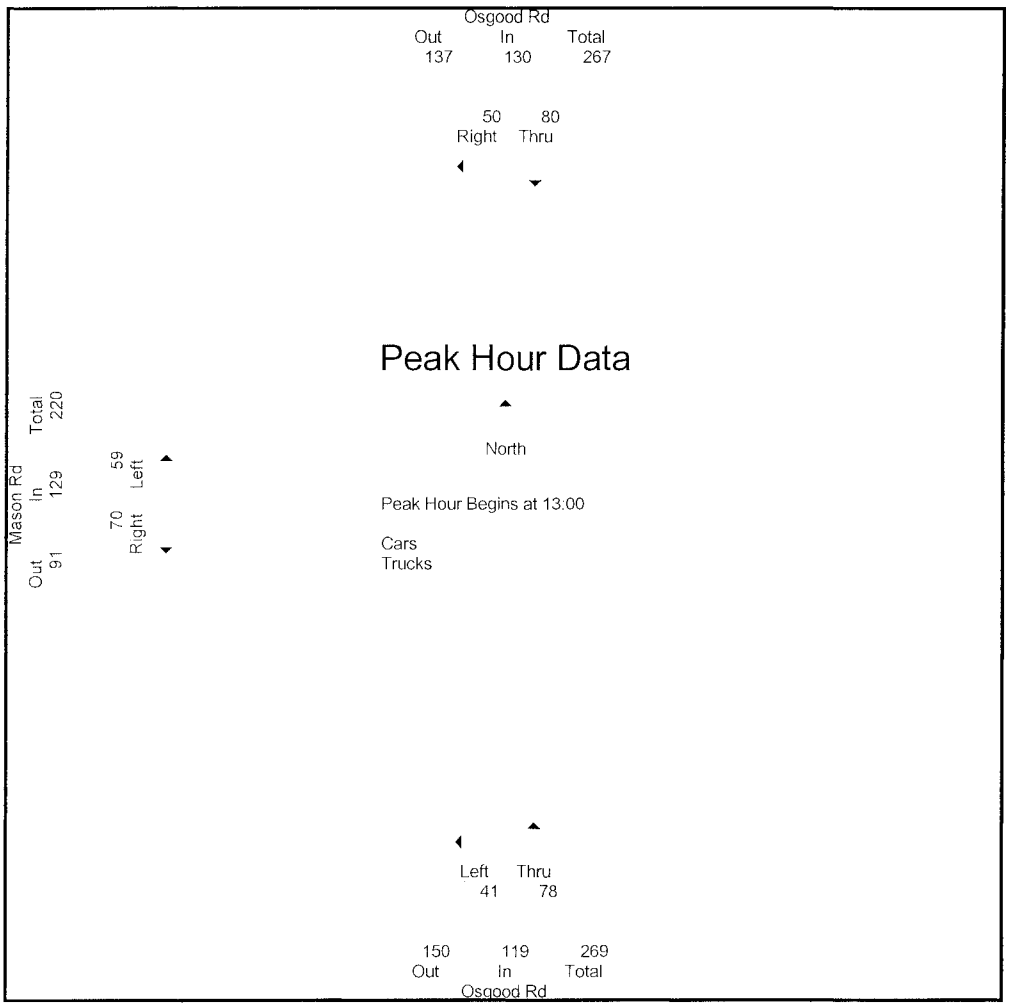

Accurate Counts
978-664-2565

N/S Street : Osgood Road
E/W Street: Mason Road
City/State : Milford, NH
Weather : Rain

File Name : 517840A6
Site Code : 51784006
Start Date : 5/13/2006
Page No : 1

	Osgood Rd From North			Osgood Rd From South			Mason Rd From West			
Start Time	Thru	Right	App. Total	Left	Thru	App. Total	Left	Right	App. Total	Int. Total
Peak Hour Analysis From 10:00 to 13:45 - Peak 1 of 1										
Peak Hour for Entire Intersection Begins at 13:00										
13:00	13	2	15	8	9	17	6	9	15	47
13:15	**31**	**20**	**51**	10	**25**	35	12	22	34	**120**
13:30	13	15	28	5	24	29	**22**	**25**	**47**	104
13:45	23	13	36	**18**	20	**38**	19	13	32	106
Total Volume	80	50	130	41	78	119	59	69	128	377
% App. Total	61.5	38.5		34.5	65.5		46.1	53.9		
PHF	.645	.625	.637	.569	.780	.783	.670	.690	.681	.785

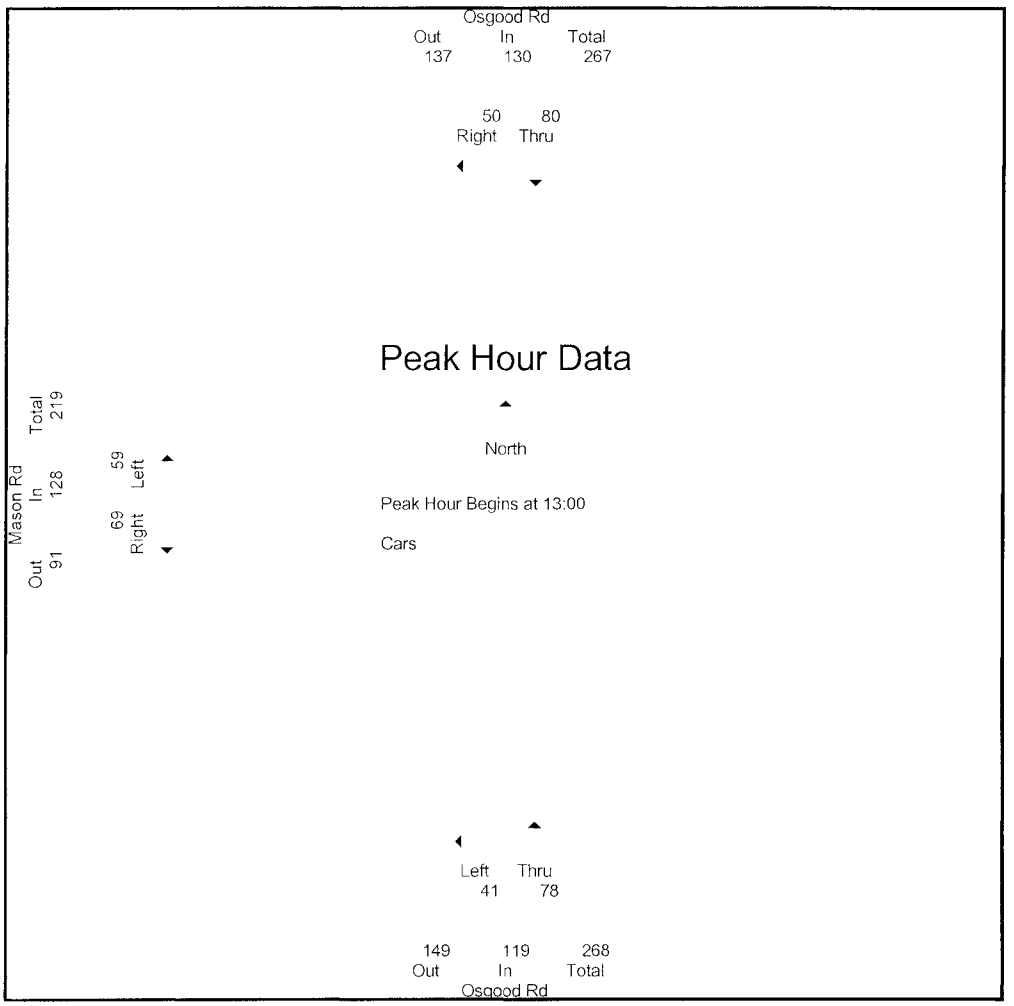

Accurate Counts
978-664-2565

N/S Street : Osgood Road
E/W Street: Mason Road
City/State : Milford, NH
Weather : Rain

File Name : 517840A6
Site Code : 51784006
Start Date : 5/13/2006
Page No : 1

	Osgood Rd From North			Osgood Rd From South			Mason Rd From West			
Start Time	Thru	Right	App Total	Left	Thru	App. Total	Left	Right	App. Total	Int. Total
Peak Hour Analysis From 10:00 to 13:45 - Peak 1 of 1										
Peak Hour for Entire Intersection Begins at 10:45										
10:45	1	0	1	0	1	1	0	1	1	3
11:00	0	0	0	0	1	1	0	0	0	1
11:15	0	0	0	0	0	0	0	1	1	1
11:30	1	0	1	0	1	1	0	0	0	2
Total Volume	2	0	2	0	3	3	0	2	2	7
% App. Total	100	0		0	100		0	100		
PHF	.500	.000	.500	.000	.750	.750	.000	.500	.500	.583

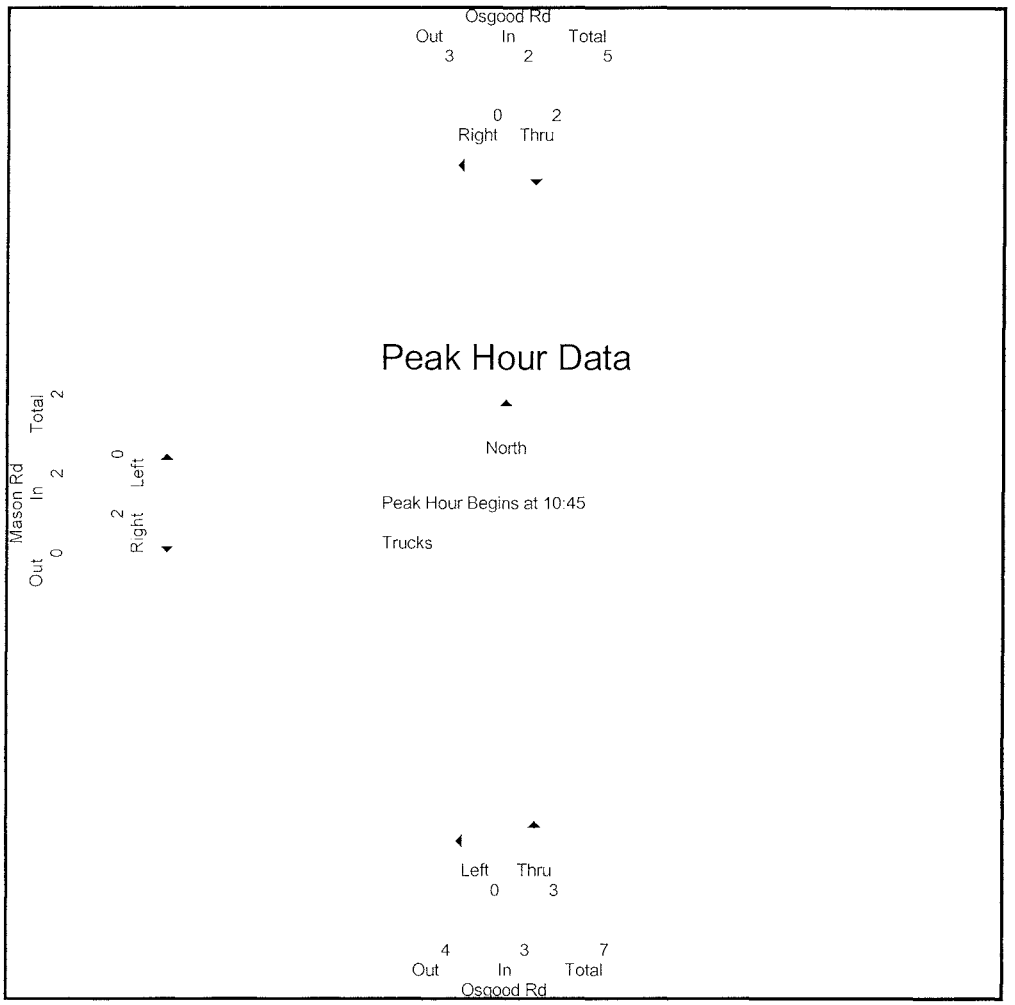

Attachment D-2g

West Street/Knight Street
Intersection

N/S Street : West Street
E/W Street: Knight Street
City/State : Milford, NH
Weather : Rain

Accurate Counts
978-664-2565

File Name : 517840B1
Site Code : 51784001
Start Date : 11/15/2007
Page No : 1

Groups Printed- Cars - Trucks

	West St From North				Knight St From East				West St From South				Knight St From West						
Start Time	Left	Thru	Right	Peds	Left	Thru	Right	Peds	Left	Thru	Right	Peds	Left	Thru	Right	Peds	Exclu. Total	Inclu. Total	Int. Total
07:00	5	78	1	0	4	0	3	4	1	39	3	0	2	0	5	0	4	141	145
07:15	12	104	1	4	3	1	0	5	2	93	20	0	2	3	8	0	9	249	258
07:30	3	57	2	0	9	1	5	2	7	96	20	0	2	2	5	0	2	209	211
07:45	5	26	1	0	2	0	4	1	1	32	3	0	3	1	4	0	1	82	83
Total	25	265	5	4	18	2	12	12	11	260	46	0	9	6	22	0	16	681	697
08:00	4	31	1	10	1	0	6	8	0	26	3	1	1	1	5	1	20	79	99
08:15	4	21	0	1	2	2	3	0	2	26	1	0	1	1	0	0	1	63	64
08:30	4	32	0	0	2	0	9	0	1	29	4	0	1	3	2	0	0	87	87
08:45	3	18	0	2	1	0	5	0	0	18	1	1	0	1	0	1	4	47	51
Total	15	102	1	13	6	2	23	8	3	99	9	2	3	6	7	2	25	276	301
Grand Total	40	367	6	17	24	4	35	20	14	359	55	2	12	12	29	2	41	957	998
Apprch %	9.7	88.9	1.5		38.1	6.3	55.6		3.3	83.9	12.9		22.6	22.6	54.7				
Total %	4.2	38.3	0.6		2.5	0.4	3.7		1.5	37.5	5.7		1.3	1.3	3		4.1	95.9	
Cars	39	344	6		22	4	33		13	342	55		12	11	29		0	0	951
% Cars	97.5	93.7	100	100	91.7	100	94.3	100	92.9	95.3	100	100	100	91.7	100	100	0	0	95.3
Trucks	1	23	0		2	0	2		1	17	0		0	1	0		0	0	47
% Trucks	2.5	6.3	0	0	8.3	0	5.7	0	7.1	4.7	0	0	0	8.3	0	0	0	0	4.7

	West St From North				Knight St From East				West St From South				Knight St From West				
Start Time	Left	Thru	Right	App. Total	Left	Thru	Right	App. Total	Left	Thru	Right	App. Total	Left	Thru	Right	App. Total	Int. Total
Peak Hour Analysis From 07:00 to 08:45 - Peak 1 of 1																	
Peak Hour for Entire Intersection Begins at 07:00																	
07:00	5	78	1	84	4	0	3	7	1	39	3	43	2	0	5	7	141
07:15	12	104	1	117	3	1	0	4	2	93	20	115	2	3	8	13	249
07:30	3	57	2	62	9	1	5	15	7	96	20	123	2	2	5	9	209
07:45	5	26	1	32	2	0	4	6	1	32	3	36	3	1	4	8	82
Total Volume	25	265	5	295	18	2	12	32	11	260	46	317	9	6	22	37	681
% App. Total	8.5	89.8	1.7		56.2	6.2	37.5		3.5	82	14.5		24.3	16.2	59.5		
PHF	.521	.637	.625	.630	.500	.500	.600	.533	.393	.677	.575	.644	.750	.500	.688	.712	.684
Cars	25	248	5	278	17	2	12	31	11	248	46	305	9	6	22	37	651
% Cars	100	93.6	100	94.2	94.4	100	100	96.9	100	95.4	100	96.2	100	100	100	100	95.6
Trucks	0	17	0	17	1	0	0	1	0	12	0	12	0	0	0	0	30
% Trucks	0	6.4	0	5.8	5.6	0	0	3.1	0	4.6	0	3.8	0	0	0	0	4.4

Accurate Counts
978-664-2565

File Name : 517840B1
Site Code : 51784001
Start Date : 11/15/2007
Page No : 2

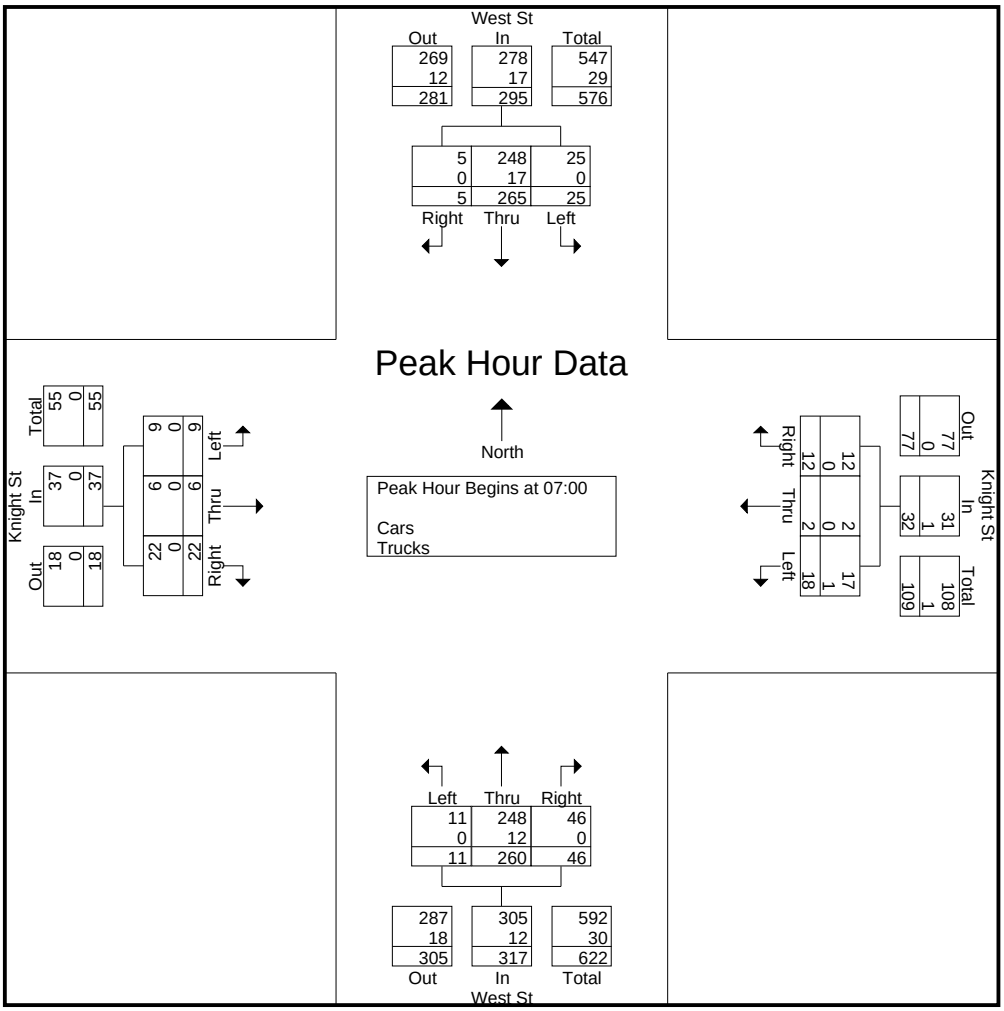

Peak Hour Analysis From 07:00 to 08:45 - Peak 1 of 1
Peak Hour for Each Approach Begins at:

	07:00				07:30				07:00				07:00			
+0 mins.	5	78	1	84	9	1	5	15	1	39	3	43	2	0	5	7
+15 mins.	12	104	1	117	2	0	4	6	2	93	20	115	2	3	8	13
+30 mins.	3	57	2	62	1	0	6	7	7	96	20	123	2	2	5	9
+45 mins.	5	26	1	32	2	2	3	7	1	32	3	36	3	1	4	8
Total Volume	25	265	5	295	14	3	18	35	11	260	46	317	9	6	22	37
% App. Total	8.5	89.8	1.7		40	8.6	51.4		3.5	82	14.5		24.3	16.2	59.5	
PHF	.521	.637	.625	.630	.389	.375	.750	.583	.393	.677	.575	.644	.750	.500	.688	.712
Cars	25	248	5	278	13	3	17	33	11	248	46	305	9	6	22	37
% Cars	100	93.6	100	94.2	92.9	100	94.4	94.3	100	95.4	100	96.2	100	100	100	100
Trucks	0	17	0	17	1	0	1	2	0	12	0	12	0	0	0	0
% Trucks	0	6.4	0	5.8	7.1	0	5.6	5.7	0	4.6	0	3.8	0	0	0	0

Accurate Counts
978-664-2565

File Name : 517840B1
Site Code : 51784001
Start Date : 11/15/2007
Page No : 3

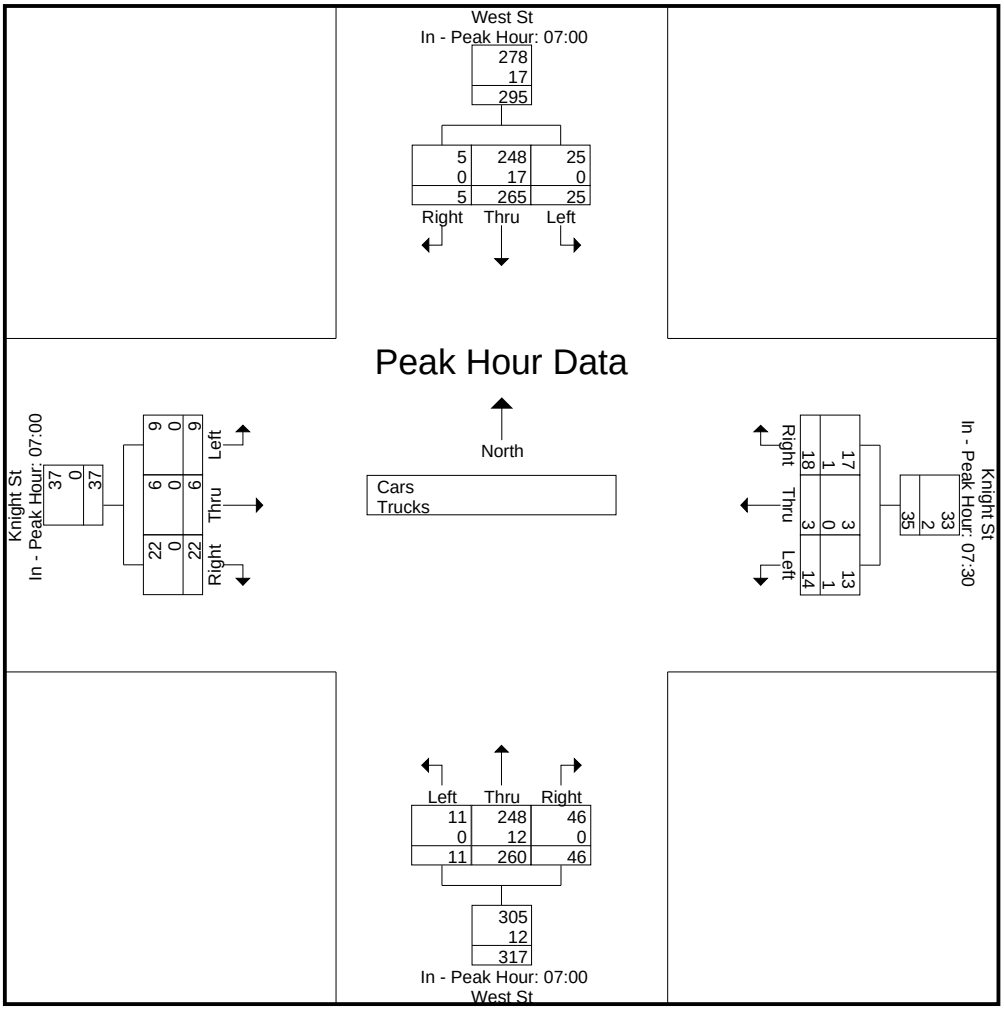

Peak Hour Data

N/S Street : West Street
E/W Street: Knight Street
City/State : Milford, NH
Weather : Rain

Accurate Counts
978-664-2565

File Name : 517840B1
Site Code : 51784001
Start Date : 11/15/2007
Page No : 1

Groups Printed- Cars

	West St From North				Knight St From East				West St From South				Knight St From West						
Start Time	Left	Thru	Right	Peds	Left	Thru	Right	Peds	Left	Thru	Right	Peds	Left	Thru	Right	Peds	Exclu. Total	Inclu. Total	Int. Total
07:00	5	76	1	0	4	0	3	4	1	39	3	0	2	0	5	0	4	139	143
07:15	12	96	1	4	3	1	0	5	2	88	20	0	2	3	8	0	9	236	245
07:30	3	53	2	0	9	1	5	2	7	91	20	0	2	2	5	0	2	200	202
07:45	5	23	1	0	1	0	4	1	1	30	3	0	3	1	4	0	1	76	77
Total	25	248	5	4	17	2	12	12	11	248	46	0	9	6	22	0	16	651	667
08:00	4	28	1	10	1	0	6	8	0	25	3	1	1	1	5	1	20	75	95
08:15	3	21	0	1	2	2	2	0	1	26	1	0	1	1	0	0	1	60	61
08:30	4	31	0	0	2	0	8	0	1	28	4	0	1	2	2	0	0	83	83
08:45	3	16	0	2	0	0	5	0	0	15	1	1	0	1	0	1	4	41	45
Total	14	96	1	13	5	2	21	8	2	94	9	2	3	5	7	2	25	259	284
Grand Total	39	344	6	17	22	4	33	20	13	342	55	2	12	11	29	2	41	910	951
Apprch %	10	88.4	1.5		37.3	6.8	55.9		3.2	83.4	13.4		23.1	21.2	55.8				
Total %	4.3	37.8	0.7		2.4	0.4	3.6		1.4	37.6	6		1.3	1.2	3.2		4.3	95.7	

	West St From North				Knight St From East				West St From South				Knight St From West				
Start Time	Left	Thru	Right	App. Total	Left	Thru	Right	App. Total	Left	Thru	Right	App. Total	Left	Thru	Right	App. Total	Int. Total
Peak Hour Analysis From 07:00 to 08:45 - Peak 1 of 1																	
Peak Hour for Entire Intersection Begins at 07:00																	
07:00	5	76	1	82	4	0	3	7	1	39	3	43	2	0	5	7	139
07:15	12	96	1	109	3	1	0	4	2	88	20	110	2	3	8	13	236
07:30	3	53	2	58	9	1	5	15	7	91	20	118	2	2	5	9	200
07:45	5	23	1	29	1	0	4	5	1	30	3	34	3	1	4	8	76
Total Volume	25	248	5	278	17	2	12	31	11	248	46	305	9	6	22	37	651
% App. Total	9	89.2	1.8		54.8	6.5	38.7		3.6	81.3	15.1		24.3	16.2	59.5		
PHF	.521	.646	.625	.638	.472	.500	.600	.517	.393	.681	.575	.646	.750	.500	.688	.712	.690

Accurate Counts
978-664-2565

File Name : 517840B1
Site Code : 51784001
Start Date : 11/15/2007
Page No : 2

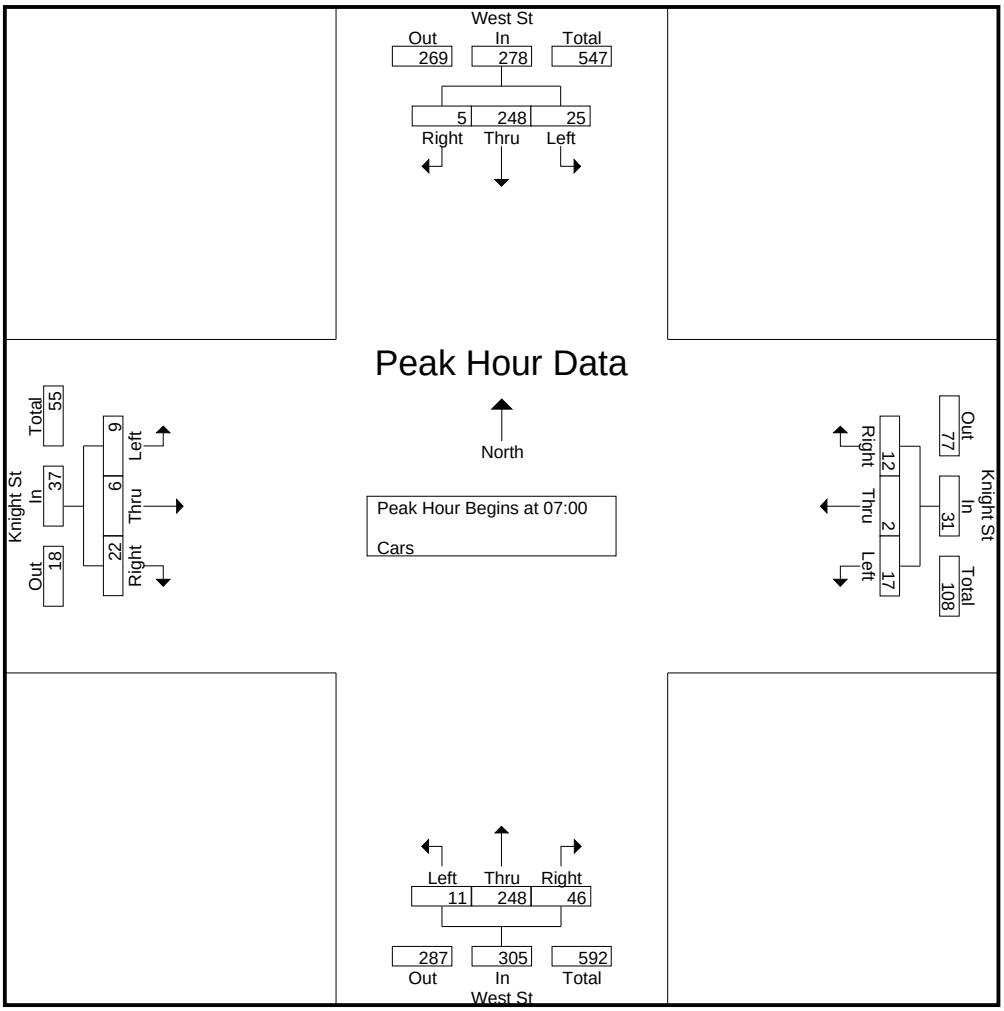

Peak Hour Analysis From 07:00 to 08:45 - Peak 1 of 1

Peak Hour for Each Approach Begins at:

	07:00				07:30				07:00				07:00			
+0 mins.	5	76	1	82	9	1	5	15	1	39	3	43	2	0	5	7
+15 mins.	12	96	1	109	1	0	4	5	2	88	20	110	2	3	8	13
+30 mins.	3	53	2	58	1	0	6	7	7	91	20	118	2	2	5	9
+45 mins.	5	23	1	29	2	2	2	6	1	30	3	34	3	1	4	8
Total Volume	25	248	5	278	13	3	17	33	11	248	46	305	9	6	22	37
% App. Total	9	89.2	1.8		39.4	9.1	51.5		3.6	81.3	15.1		24.3	16.2	59.5	
PHF	.521	.646	.625	.638	.361	.375	.708	.550	.393	.681	.575	.646	.750	.500	.688	.712

Accurate Counts
978-664-2565

File Name : 517840B1
Site Code : 51784001
Start Date : 11/15/2007
Page No : 3

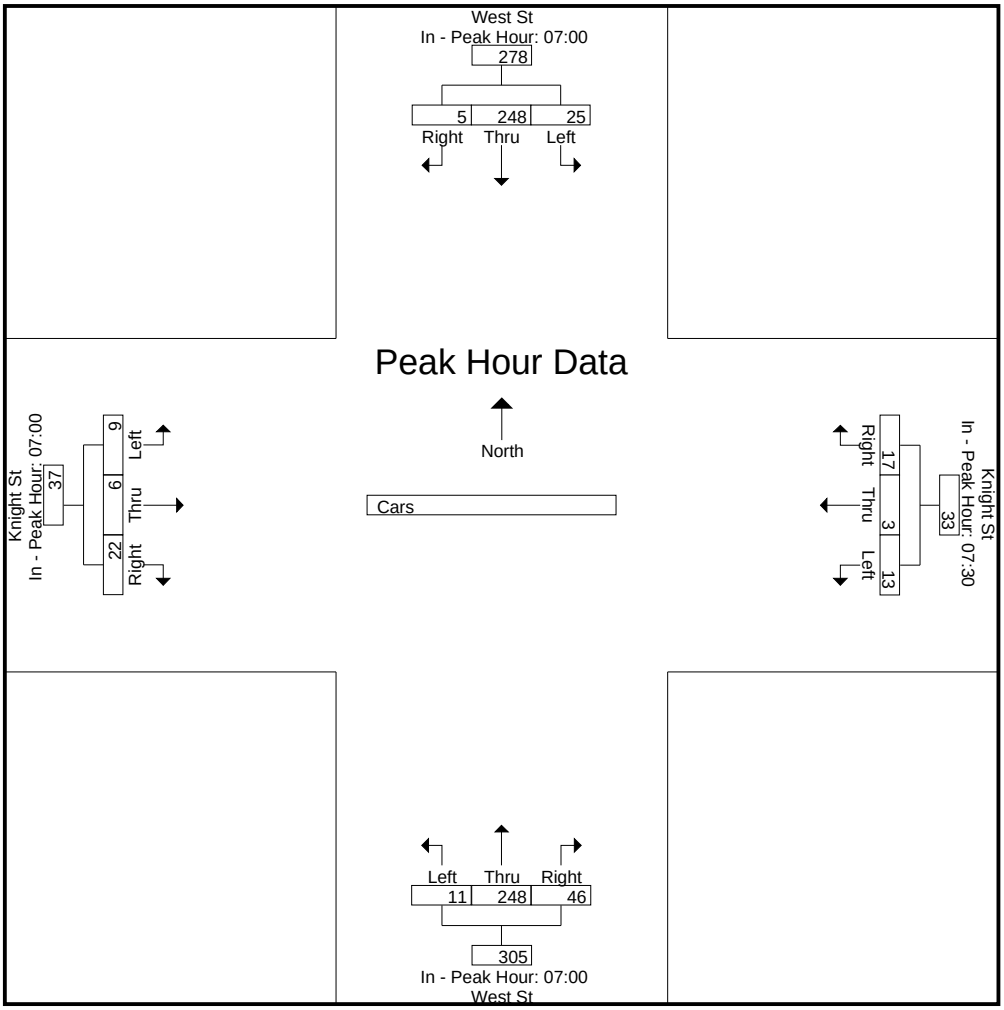

N/S Street : West Street
E/W Street: Knight Street
City/State : Milford, NH
Weather : Rain

Accurate Counts
978-664-2565

File Name : 517840B1
Site Code : 51784001
Start Date : 11/15/2007
Page No : 1

Groups Printed- Trucks

	West St From North				Knight St From East				West St From South				Knight St From West						
Start Time	Left	Thru	Right	Peds	Left	Thru	Right	Peds	Left	Thru	Right	Peds	Left	Thru	Right	Peds	Exclu. Total	Inclu. Total	Int. Total
07:00	0	2	0	0	0	0	0	0	0	0	0	0	0	0	0	0	0	2	2
07:15	0	8	0	0	0	0	0	0	0	5	0	0	0	0	0	0	0	13	13
07:30	0	4	0	0	0	0	0	0	0	5	0	0	0	0	0	0	0	9	9
07:45	0	3	0	0	1	0	0	0	0	2	0	0	0	0	0	0	0	6	6
Total	0	17	0	0	1	0	0	0	0	12	0	0	0	0	0	0	0	30	30
08:00	0	3	0	0	0	0	0	0	0	1	0	0	0	0	0	0	0	4	4
08:15	1	0	0	0	0	0	1	0	1	0	0	0	0	0	0	0	0	3	3
08:30	0	1	0	0	0	0	1	0	0	1	0	0	0	1	0	0	0	4	4
08:45	0	2	0	0	1	0	0	0	0	3	0	0	0	0	0	0	0	6	6
Total	1	6	0	0	1	0	2	0	1	5	0	0	0	1	0	0	0	17	17
Grand Total	1	23	0	0	2	0	2	0	1	17	0	0	0	1	0	0	0	47	47
Apprch %	4.2	95.8	0		50	0	50		5.6	94.4	0		0	100	0				
Total %	2.1	48.9	0		4.3	0	4.3		2.1	36.2	0		0	2.1	0		0	100	

	West St From North				Knight St From East				West St From South				Knight St From West				
Start Time	Left	Thru	Right	App. Total	Left	Thru	Right	App. Total	Left	Thru	Right	App. Total	Left	Thru	Right	App. Total	Int. Total
Peak Hour Analysis From 07:00 to 08:45 - Peak 1 of 1																	
Peak Hour for Entire Intersection Begins at 07:15																	
07:15	0	8	0	8	0	0	0	0	0	5	0	5	0	0	0	0	13
07:30	0	4	0	4	0	0	0	0	0	5	0	5	0	0	0	0	9
07:45	0	3	0	3	1	0	0	1	0	2	0	2	0	0	0	0	6
08:00	0	3	0	3	0	0	0	0	0	1	0	1	0	0	0	0	4
Total Volume	0	18	0	18	1	0	0	1	0	13	0	13	0	0	0	0	32
% App. Total	0	100	0		100	0	0		0	100	0		0	0	0		
PHF	.000	.563	.000	.563	.250	.000	.000	.250	.000	.650	.000	.650	.000	.000	.000	.000	.615

Accurate Counts
978-664-2565

File Name : 517840B1
Site Code : 51784001
Start Date : 11/15/2007
Page No : 2

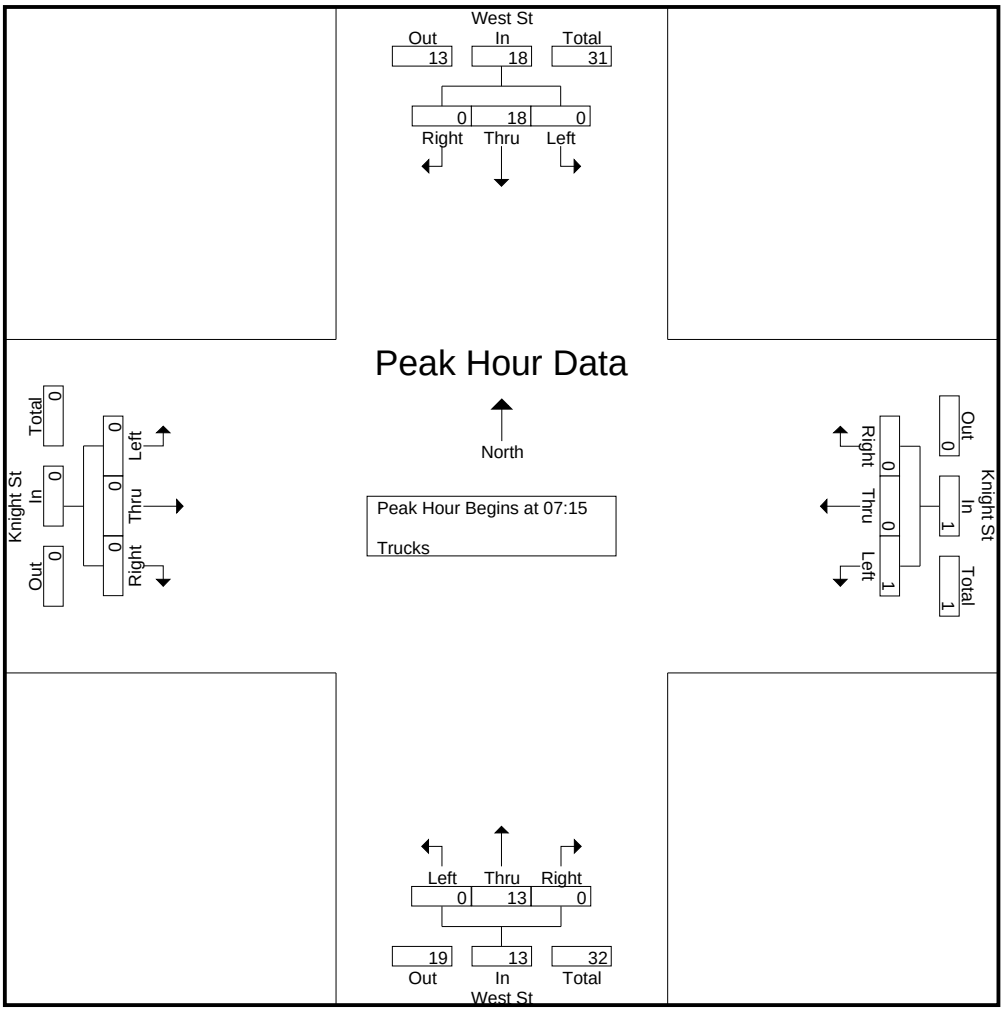

Peak Hour Analysis From 07:00 to 08:45 - Peak 1 of 1

Peak Hour for Each Approach Begins at:

	07:15				07:45				07:15				07:45			
+0 mins.	0	8	0	8	1	0	0	1	0	5	0	5	0	0	0	0
+15 mins.	0	4	0	4	0	0	0	0	0	5	0	5	0	0	0	0
+30 mins.	0	3	0	3	0	0	1	1	0	2	0	2	0	0	0	0
+45 mins.	0	3	0	3	0	0	1	1	0	1	0	1	0	1	0	1
Total Volume	0	18	0	18	1	0	2	3	0	13	0	13	0	1	0	1
% App. Total	0	100	0		33.3	0	66.7		0	100	0		0	100	0	
PHF	.000	.563	.000	.563	.250	.000	.500	.750	.000	.650	.000	.650	.000	.250	.000	.250

Accurate Counts
978-664-2565

File Name : 517840B1
Site Code : 51784001
Start Date : 11/15/2007
Page No : 3

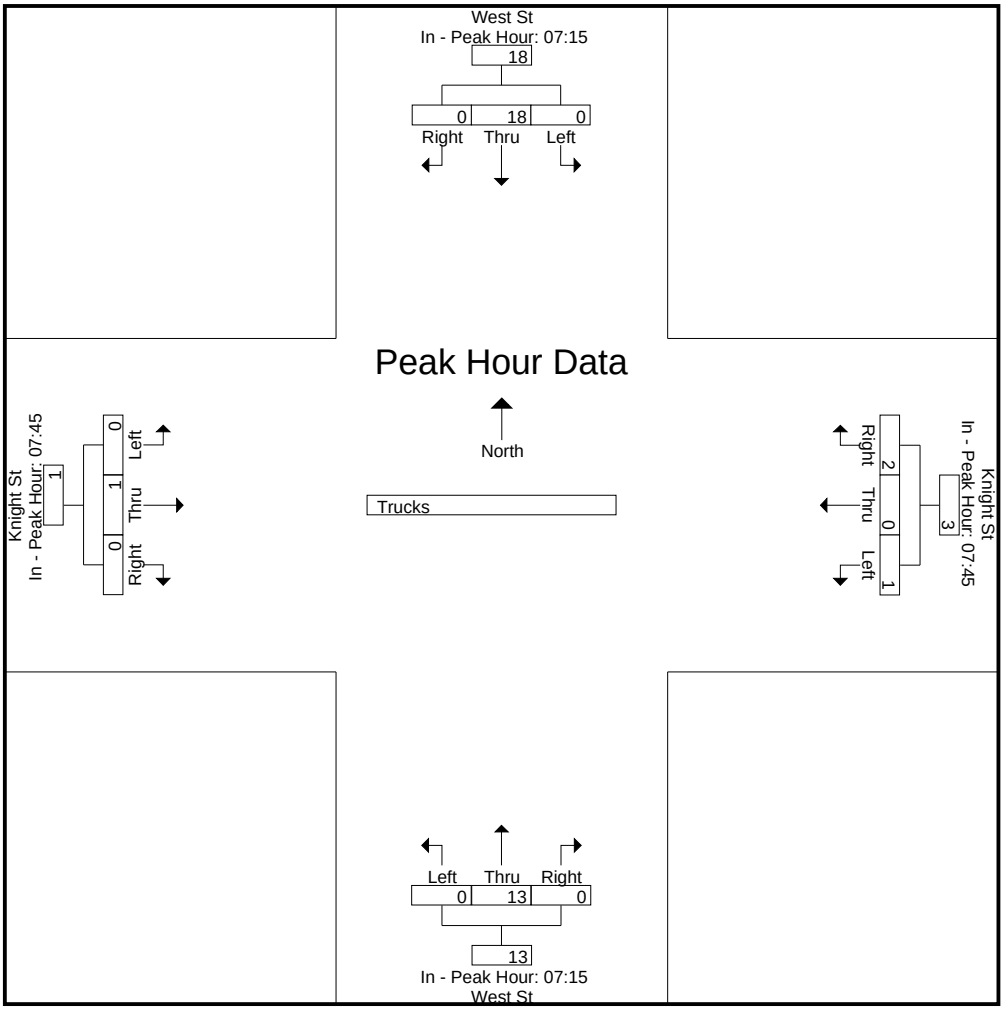

N/S Street : West Street
E/W Street: Knight Street
City/State : Milford, NH
Weather : Clear

Accurate Counts
978-664-2565

File Name : 517840A1
Site Code : 51784001
Start Date : 11/14/2007
Page No : 1

Groups Printed- Cars - Trucks

	West St From North				Knight St From East				West St From South				Knight St From West						
Start Time	Left	Thru	Right	Peds	Left	Thru	Right	Peds	Left	Thru	Right	Peds	Left	Thru	Right	Peds	Exclu. Total	Inclu. Total	Int. Total
16:00	7	38	1	0	1	4	9	2	4	43	1	0	0	0	5	0	2	113	115
16:15	7	36	2	0	4	1	9	4	2	44	1	0	0	0	1	0	4	107	111
16:30	2	28	3	0	3	0	8	5	1	40	1	0	2	0	3	0	5	91	96
16:45	6	35	0	0	3	2	3	3	3	39	3	0	0	0	1	0	3	95	98
Total	22	137	6	0	11	7	29	14	10	166	6	0	2	0	10	0	14	406	420
17:00	6	33	2	0	3	4	12	2	0	36	2	0	2	0	0	0	2	100	102
17:15	7	38	4	0	1	5	12	1	2	36	1	0	2	0	1	0	1	109	110
17:30	5	35	1	0	4	3	9	1	1	39	1	0	0	0	2	0	1	100	101
17:45	7	32	1	0	4	1	8	0	3	40	2	0	0	0	2	0	0	100	100
Total	25	138	8	0	12	13	41	4	6	151	6	0	4	0	5	0	4	409	413
Grand Total	47	275	14	0	23	20	70	18	16	317	12	0	6	0	15	0	18	815	833
Apprch %	14	81.8	4.2		20.4	17.7	61.9		4.6	91.9	3.5		28.6	0	71.4				
Total %	5.8	33.7	1.7		2.8	2.5	8.6		2	38.9	1.5		0.7	0	1.8		2.2	97.8	
Cars	47	270	14		23	20	69		16	312	12		5	0	15		0	0	821
% Cars	100	98.2	100	0	100	100	98.6	100	100	98.4	100	0	83.3	0	100	0	0	0	98.6
Trucks	0	5	0		0	0	1		0	5	0		1	0	0		0	0	12
% Trucks	0	1.8	0	0	0	0	1.4	0	0	1.6	0	0	16.7	0	0	0	0	0	1.4

	West St From North				Knight St From East				West St From South				Knight St From West				
Start Time	Left	Thru	Right	App. Total	Left	Thru	Right	App. Total	Left	Thru	Right	App. Total	Left	Thru	Right	App. Total	Int. Total
Peak Hour Analysis From 16:00 to 17:45 - Peak 1 of 1																	
Peak Hour for Entire Intersection Begins at 17:00																	
17:00	6	33	2	41	3	4	12	19	0	36	2	38	2	0	0	2	100
17:15	7	38	4	49	1	5	12	18	2	36	1	39	2	0	1	3	109
17:30	5	35	1	41	4	3	9	16	1	39	1	41	0	0	2	2	100
17:45	7	32	1	40	4	1	8	13	3	40	2	45	0	0	2	2	100
Total Volume	25	138	8	171	12	13	41	66	6	151	6	163	4	0	5	9	409
% App. Total	14.6	80.7	4.7		18.2	19.7	62.1		3.7	92.6	3.7		44.4	0	55.6		
PHF	.893	.908	.500	.872	.750	.650	.854	.868	.500	.944	.750	.906	.500	.000	.625	.750	.938
Cars	25	134	8	167	12	13	40	65	6	149	6	161	3	0	5	8	401
% Cars	100	97.1	100	97.7	100	100	97.6	98.5	100	98.7	100	98.8	75.0	0	100	88.9	98.0
Trucks	0	4	0	4	0	0	1	1	0	2	0	2	1	0	0	1	8
% Trucks	0	2.9	0	2.3	0	0	2.4	1.5	0	1.3	0	1.2	25.0	0	0	11.1	2.0

Accurate Counts
978-664-2565

File Name : 517840A1
Site Code : 51784001
Start Date : 11/14/2007
Page No : 2

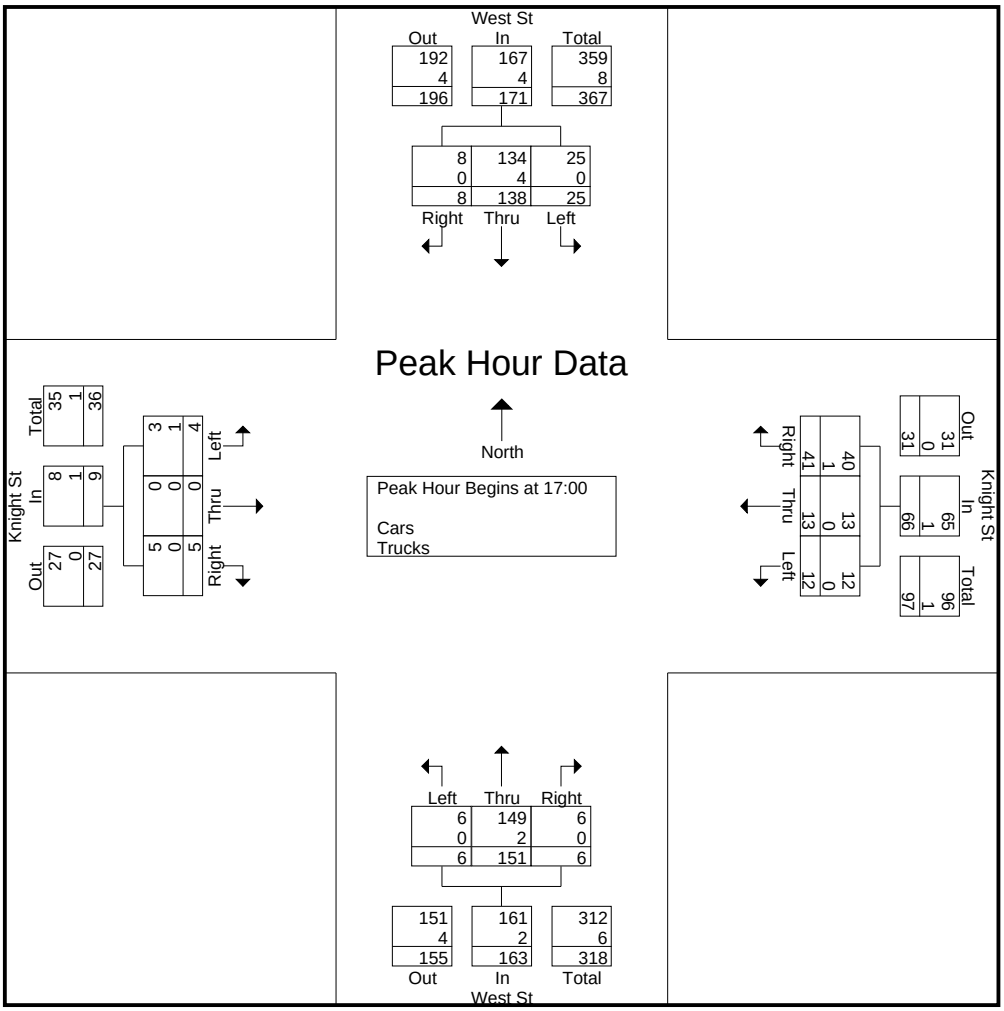

Peak Hour Analysis From 16:00 to 17:45 - Peak 1 of 1

Peak Hour for Each Approach Begins at:

	16:45				17:00				16:00				16:00			
+0 mins.	6	35	0	41	3	4	12	19	4	43	1	48	0	0	5	5
+15 mins.	6	33	2	41	1	5	12	18	2	44	1	47	0	0	1	1
+30 mins.	7	38	4	49	4	3	9	16	1	40	1	42	2	0	3	5
+45 mins.	5	35	1	41	4	1	8	13	3	39	3	45	0	0	1	1
Total Volume	24	141	7	172	12	13	41	66	10	166	6	182	2	0	10	12
% App. Total	14	82	4.1		18.2	19.7	62.1		5.5	91.2	3.3		16.7	0	83.3	
PHF	.857	.928	.438	.878	.750	.650	.854	.868	.625	.943	.500	.948	.250	.000	.500	.600
Cars	24	137	7	168	12	13	40	65	10	163	6	179	2	0	10	12
% Cars	100	97.2	100	97.7	100	100	97.6	98.5	100	98.2	100	98.4	100	0	100	100
Trucks	0	4	0	4	0	0	1	1	0	3	0	3	0	0	0	0
% Trucks	0	2.8	0	2.3	0	0	2.4	1.5	0	1.8	0	1.6	0	0	0	0

Accurate Counts
978-664-2565

File Name : 517840A1
Site Code : 51784001
Start Date : 11/14/2007
Page No : 3

Peak Hour Data

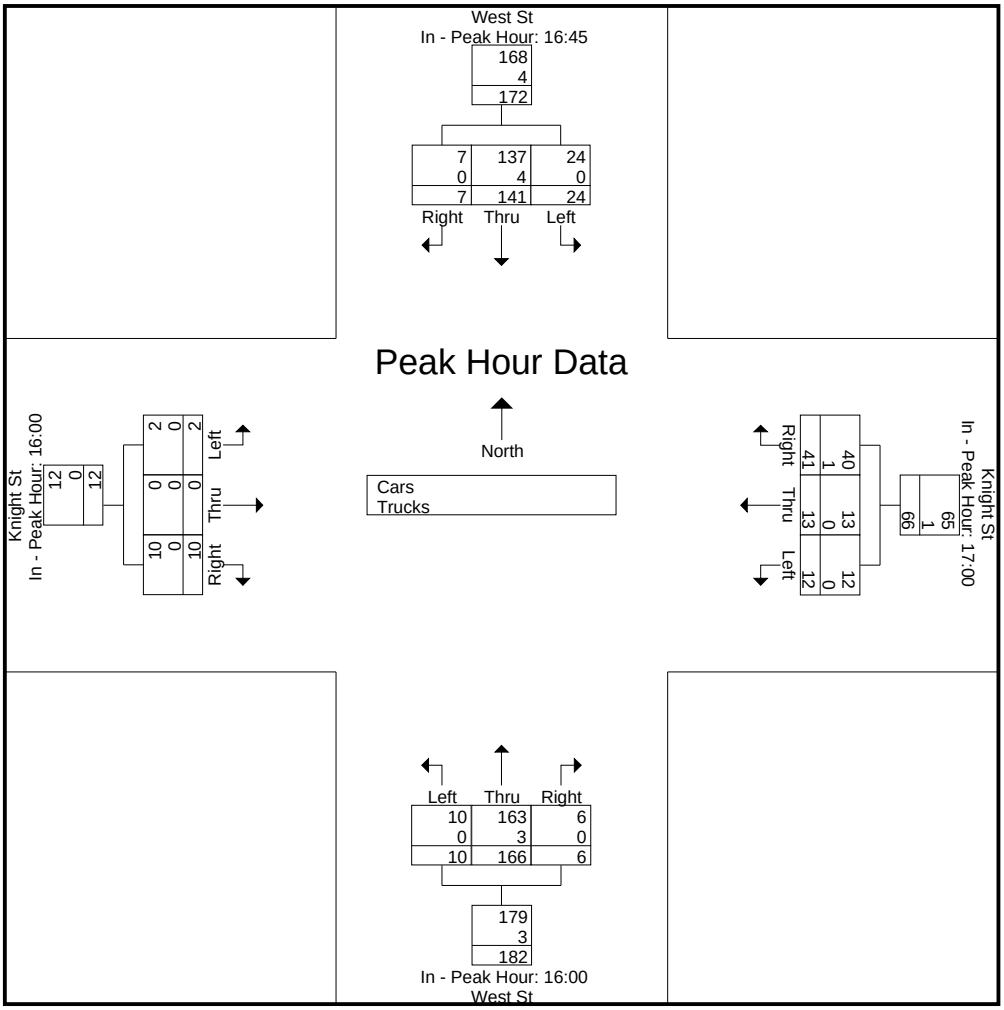

N/S Street : West Street
E/W Street: Knight Street
City/State : Milford, NH
Weather : Clear

Accurate Counts
978-664-2565

File Name : 517840A1
Site Code : 51784001
Start Date : 11/14/2007
Page No : 1

Groups Printed- Cars

	West St From North				Knight St From East				West St From South				Knight St From West						
Start Time	Left	Thru	Right	Peds	Left	Thru	Right	Peds	Left	Thru	Right	Peds	Left	Thru	Right	Peds	Exclu. Total	Inclu. Total	Int. Total
16:00	7	38	1	0	1	4	9	2	4	41	1	0	0	0	5	0	2	111	113
16:15	7	36	2	0	4	1	9	4	2	43	1	0	0	0	1	0	4	106	110
16:30	2	28	3	0	3	0	8	5	1	40	1	0	2	0	3	0	5	91	96
16:45	6	34	0	0	3	2	3	3	3	39	3	0	0	0	1	0	3	94	97
Total	22	136	6	0	11	7	29	14	10	163	6	0	2	0	10	0	14	402	416
17:00	6	33	2	0	3	4	11	2	0	36	2	0	2	0	0	0	2	99	101
17:15	7	35	4	0	1	5	12	1	2	35	1	0	1	0	1	0	1	104	105
17:30	5	35	1	0	4	3	9	1	1	39	1	0	0	0	2	0	1	100	101
17:45	7	31	1	0	4	1	8	0	3	39	2	0	0	0	2	0	0	98	98
Total	25	134	8	0	12	13	40	4	6	149	6	0	3	0	5	0	4	401	405
Grand Total	47	270	14	0	23	20	69	18	16	312	12	0	5	0	15	0	18	803	821
Apprch %	14.2	81.6	4.2		20.5	17.9	61.6		4.7	91.8	3.5		25	0	75				
Total %	5.9	33.6	1.7		2.9	2.5	8.6		2	38.9	1.5		0.6	0	1.9		2.2	97.8	

	West St From North				Knight St From East				West St From South				Knight St From West				
Start Time	Left	Thru	Right	App. Total	Left	Thru	Right	App. Total	Left	Thru	Right	App. Total	Left	Thru	Right	App. Total	Int. Total
Peak Hour Analysis From 16:00 to 17:45 - Peak 1 of 1																	
Peak Hour for Entire Intersection Begins at 16:00																	
16:00	7	38	1	46	1	4	9	14	4	41	1	46	0	0	5	5	111
16:15	7	36	2	45	4	1	9	14	2	43	1	46	0	0	1	1	106
16:30	2	28	3	33	3	0	8	11	1	40	1	42	2	0	3	5	91
16:45	6	34	0	40	3	2	3	8	3	39	3	45	0	0	1	1	94
Total Volume	22	136	6	164	11	7	29	47	10	163	6	179	2	0	10	12	402
% App. Total	13.4	82.9	3.7		23.4	14.9	61.7		5.6	91.1	3.4		16.7	0	83.3		
PHF	.786	.895	.500	.891	.688	.438	.806	.839	.625	.948	.500	.973	.250	.000	.500	.600	.905

Accurate Counts
978-664-2565

File Name : 517840A1
Site Code : 51784001
Start Date : 11/14/2007
Page No : 2

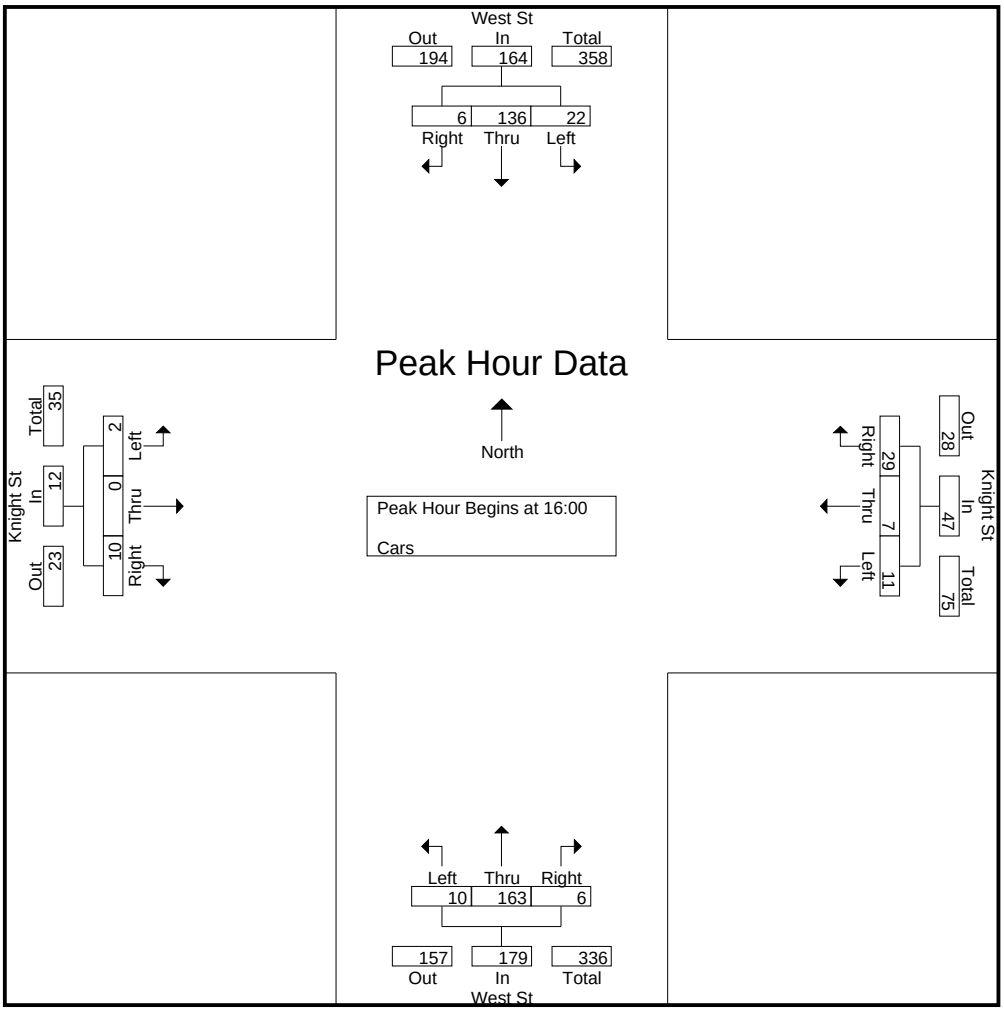

Peak Hour Analysis From 16:00 to 17:45 - Peak 1 of 1
Peak Hour for Each Approach Begins at:

	16:45				17:00				16:00				16:00			
+0 mins.	6	34	0	40	3	4	11	18	4	41	1	46	0	0	5	5
+15 mins.	6	33	2	41	1	5	12	18	2	43	1	46	0	0	1	1
+30 mins.	7	35	4	46	4	3	9	16	1	40	1	42	2	0	3	5
+45 mins.	5	35	1	41	4	1	8	13	3	39	3	45	0	0	1	1
Total Volume	24	137	7	168	12	13	40	65	10	163	6	179	2	0	10	12
% App. Total	14.3	81.5	4.2		18.5	20	61.5		5.6	91.1	3.4		16.7	0	83.3	
PHF	.857	.979	.438	.913	.750	.650	.833	.903	.625	.948	.500	.973	.250	.000	.500	.600

Accurate Counts
978-664-2565

File Name : 517840A1
Site Code : 51784001
Start Date : 11/14/2007
Page No : 3

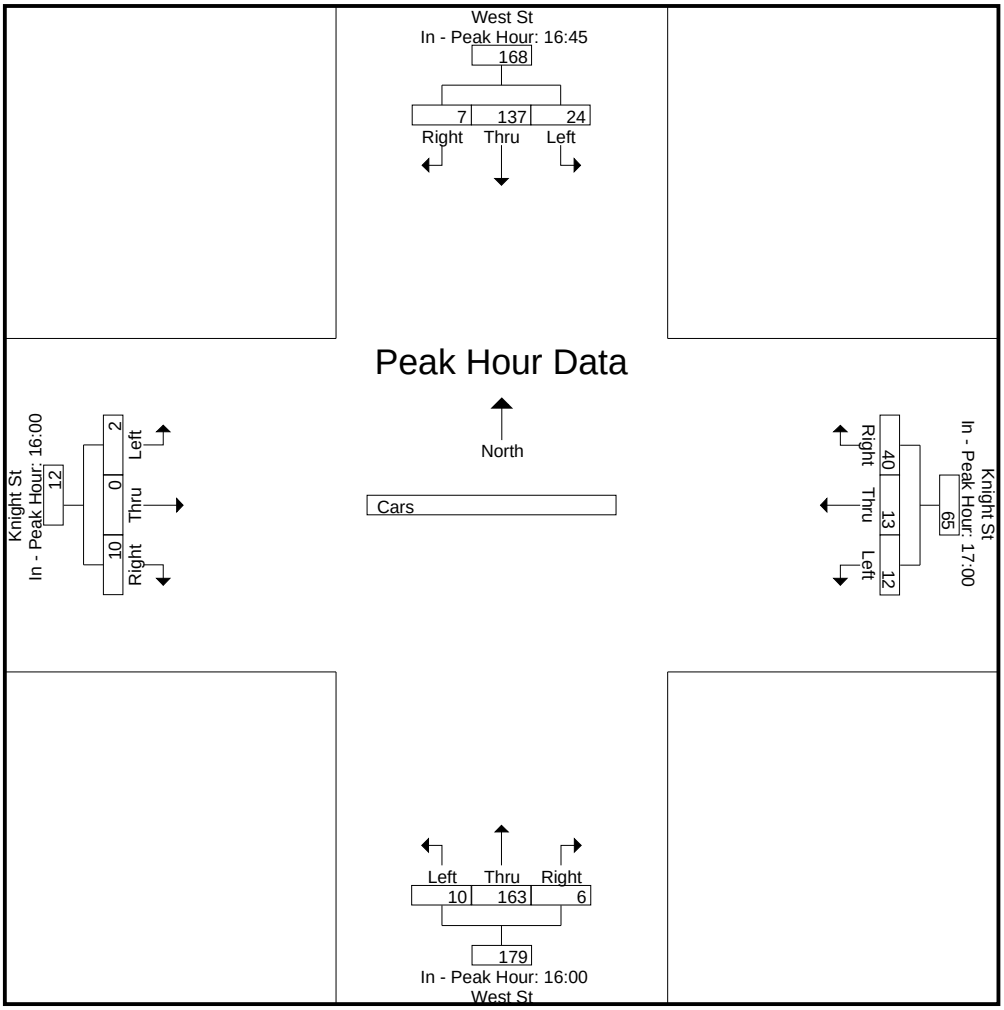

N/S Street : West Street
E/W Street: Knight Street
City/State : Milford, NH
Weather : Clear

Accurate Counts
978-664-2565

File Name : 517840A1
Site Code : 51784001
Start Date : 11/14/2007
Page No : 1

Groups Printed- Trucks

	West St From North				Knight St From East				West St From South				Knight St From West						
Start Time	Left	Thru	Right	Peds	Left	Thru	Right	Peds	Left	Thru	Right	Peds	Left	Thru	Right	Peds	Exclu. Total	Inclu. Total	Int. Total
16:00	0	0	0	0	0	0	0	0	0	2	0	0	0	0	0	0	0	2	2
16:15	0	0	0	0	0	0	0	0	0	1	0	0	0	0	0	0	0	1	1
16:30	0	0	0	0	0	0	0	0	0	0	0	0	0	0	0	0	0	0	0
16:45	0	1	0	0	0	0	0	0	0	0	0	0	0	0	0	0	0	1	1
Total	0	1	0	0	0	0	0	0	0	3	0	0	0	0	0	0	0	4	4
17:00	0	0	0	0	0	0	1	0	0	0	0	0	0	0	0	0	0	1	1
17:15	0	3	0	0	0	0	0	0	0	1	0	0	1	0	0	0	0	5	5
17:30	0	0	0	0	0	0	0	0	0	0	0	0	0	0	0	0	0	0	0
17:45	0	1	0	0	0	0	0	0	0	1	0	0	0	0	0	0	0	2	2
Total	0	4	0	0	0	0	1	0	0	2	0	0	1	0	0	0	0	8	8
Grand Total	0	5	0	0	0	0	1	0	0	5	0	0	1	0	0	0	0	12	12
Apprch %	0	100	0		0	0	100		0	100	0		100	0	0				
Total %	0	41.7	0		0	0	8.3		0	41.7	0		8.3	0	0		0	100	

	West St From North				Knight St From East				West St From South				Knight St From West				
Start Time	Left	Thru	Right	App. Total	Left	Thru	Right	App. Total	Left	Thru	Right	App. Total	Left	Thru	Right	App. Total	Int. Total
Peak Hour Analysis From 16:00 to 17:45 - Peak 1 of 1																	
Peak Hour for Entire Intersection Begins at 17:00																	
17:00	0	0	0	0	0	0	1	1	0	0	0	0	0	0	0	0	1
17:15	0	3	0	3	0	0	0	0	0	1	0	1	1	0	0	1	5
17:30	0	0	0	0	0	0	0	0	0	0	0	0	0	0	0	0	0
17:45	0	1	0	1	0	0	0	0	0	1	0	1	0	0	0	0	2
Total Volume	0	4	0	4	0	0	1	1	0	2	0	2	1	0	0	1	8
% App. Total	0	100	0		0	0	100		0	100	0		100	0	0		
PHF	.000	.333	.000	.333	.000	.000	.250	.250	.000	.500	.000	.500	.250	.000	.000	.250	.400

Accurate Counts
978-664-2565

File Name : 517840A1
Site Code : 51784001
Start Date : 11/14/2007
Page No : 2

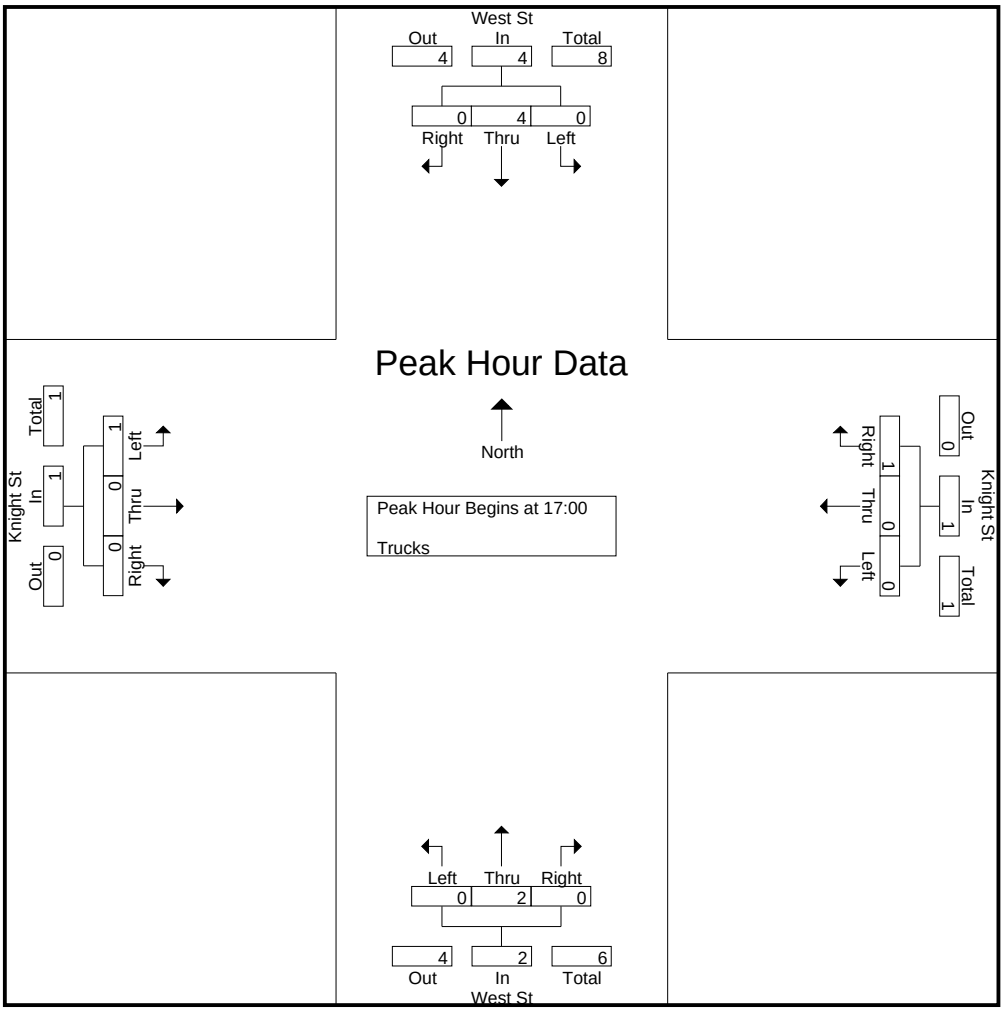

Peak Hour Analysis From 16:00 to 17:45 - Peak 1 of 1

Peak Hour for Each Approach Begins at:

	16:30				16:15				16:00				16:30			
+0 mins.	0	0	0	0	0	0	0	0	0	2	0	2	0	0	0	0
+15 mins.	0	1	0	1	0	0	0	0	0	1	0	1	0	0	0	0
+30 mins.	0	0	0	0	0	0	0	0	0	0	0	0	0	0	0	0
+45 mins.	0	3	0	3	0	0	1	1	0	0	0	0	1	0	0	1
Total Volume	0	4	0	4	0	0	1	1	0	3	0	3	1	0	0	1
% App. Total	0	100	0		0	0	100		0	100	0		100	0	0	
PHF	.000	.333	.000	.333	.000	.000	.250	.250	.000	.375	.000	.375	.250	.000	.000	.250

Accurate Counts
978-664-2565

File Name : 517840A1
Site Code : 51784001
Start Date : 11/14/2007
Page No : 3

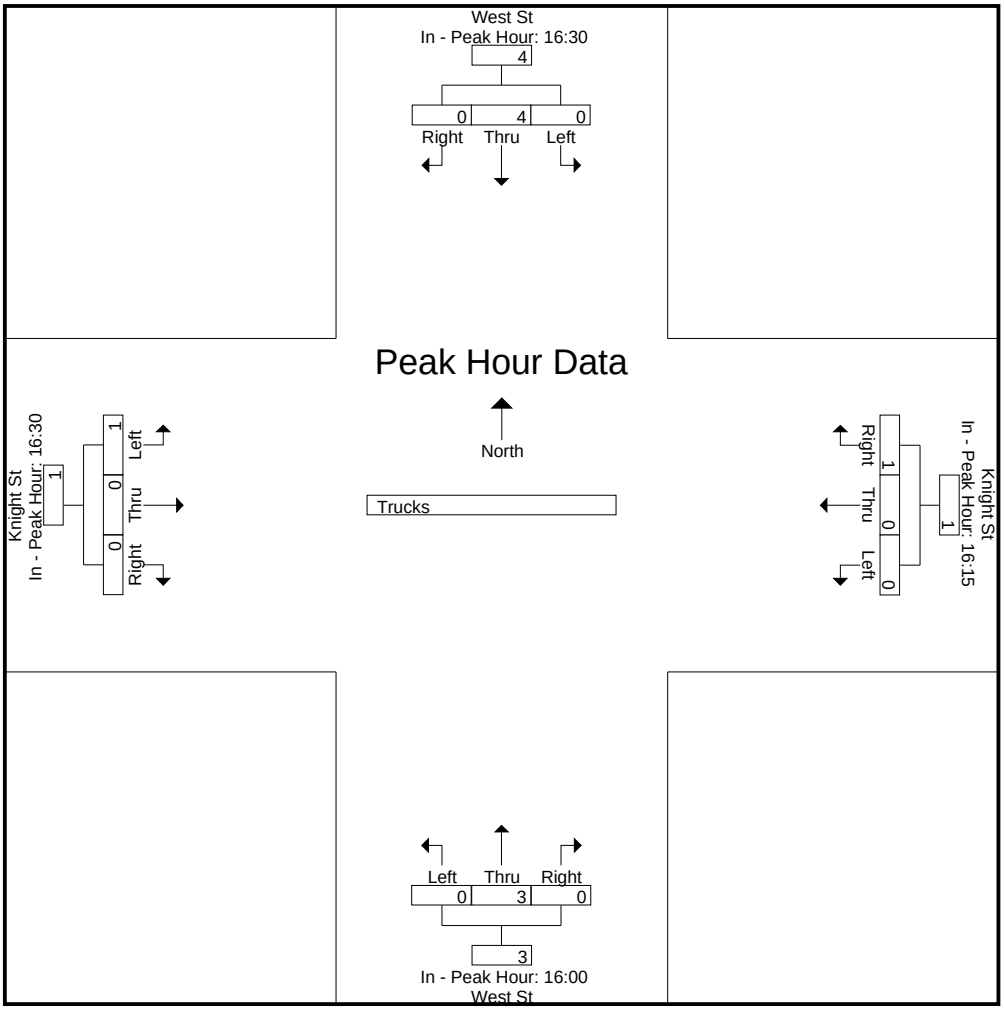

N/S Street : West Street
E/W Street: Knight Street
City/State : Milford, NH
Weather : Clear

Accurate Counts
978-664-2565

File Name : 51784001
Site Code : 51784001
Start Date : 11/10/2007
Page No : 1

Groups Printed- Cars - Trucks

	West St From North				Knight St From East				West St From South				Knight St From West						
Start Time	Left	Thru	Right	Peds	Left	Thru	Right	Peds	Left	Thru	Right	Peds	Left	Thru	Right	Peds	Exclu. Total	Inclu. Total	Int. Total
10:00	3	22	1	0	1	2	5	0	1	42	1	0	1	2	1	0	0	82	82
10:15	4	24	0	0	1	3	7	0	1	40	2	0	1	3	0	0	0	86	86
10:30	4	35	1	0	1	3	5	0	0	45	0	0	0	2	3	0	0	99	99
10:45	6	36	4	0	2	0	4	1	0	33	3	0	0	0	1	0	1	89	90
Total	17	117	6	0	5	8	21	1	2	160	6	0	2	7	5	0	1	356	357
11:00	4	25	2	0	3	0	4	2	1	28	0	0	0	1	2	0	2	70	72
11:15	4	25	3	0	4	2	9	1	0	31	2	0	2	1	0	0	1	83	84
11:30	4	29	0	0	3	4	8	2	1	29	3	0	0	2	2	0	2	85	87
11:45	3	41	1	0	4	1	7	1	2	28	2	0	0	1	0	0	1	90	91
Total	15	120	6	0	14	7	28	6	4	116	7	0	2	5	4	0	6	328	334
12:00	12	38	4	0	3	2	6	0	2	31	5	0	2	1	0	0	0	106	106
12:15	8	32	3	0	3	1	4	1	2	31	2	0	1	1	1	0	1	89	90
12:30	5	27	1	0	2	3	6	4	0	27	1	0	3	0	0	0	4	75	79
12:45	3	28	3	0	3	1	4	3	1	27	1	0	1	1	1	0	3	74	77
Total	28	125	11	0	11	7	20	8	5	116	9	0	7	3	2	0	8	344	352
13:00	4	26	2	0	2	2	7	7	1	26	2	0	1	0	1	0	7	74	81
13:15	8	33	1	2	2	1	7	0	2	24	3	0	1	2	3	0	2	87	89
13:30	5	17	1	3	1	0	5	5	1	21	1	0	4	0	0	0	8	56	64
13:45	6	24	5	1	1	1	7	4	0	21	2	0	1	1	0	0	5	69	74
Total	23	100	9	6	6	4	26	16	4	92	8	0	7	3	4	0	22	286	308
Grand Total	83	462	32	6	36	26	95	31	15	484	30	0	18	18	15	0	37	1314	1351
Apprch %	14.4	80.1	5.5		22.9	16.6	60.5		2.8	91.5	5.7		35.3	35.3	29.4				
Total %	6.3	35.2	2.4		2.7	2	7.2		1.1	36.8	2.3		1.4	1.4	1.1		2.7	97.3	
Cars	83	452	32		35	26	93		14	474	30		18	18	15		0	0	1327
% Cars	100	97.8	100	100	97.2	100	97.9	100	93.3	97.9	100	0	100	100	100	0	0	0	98.2
Trucks	0	10	0		1	0	2		1	10	0		0	0	0		0	0	24
% Trucks	0	2.2	0	0	2.8	0	2.1	0	6.7	2.1	0	0	0	0	0	0	0	0	1.8

	West St From North				Knight St From East				West St From South				Knight St From West				
Start Time	Left	Thru	Right	App. Total	Left	Thru	Right	App. Total	Left	Thru	Right	App. Total	Left	Thru	Right	App. Total	Int. Total
Peak Hour Analysis From 10:00 to 13:45 - Peak 1 of 1																	
Peak Hour for Entire Intersection Begins at 11:30																	
11:30	4	29	0	33	3	4	8	15	1	29	3	33	0	2	2	4	85
11:45	3	41	1	45	4	1	7	12	2	28	2	32	0	1	0	1	90
12:00	12	38	4	54	3	2	6	11	2	31	5	38	2	1	0	3	106
12:15	8	32	3	43	3	1	4	8	2	31	2	35	1	1	1	3	89
Total Volume	27	140	8	175	13	8	25	46	7	119	12	138	3	5	3	11	370
% App. Total	15.4	80	4.6		28.3	17.4	54.3		5.1	86.2	8.7		27.3	45.5	27.3		
PHF	.563	.854	.500	.810	.813	.500	.781	.767	.875	.960	.600	.908	.375	.625	.375	.688	.873
Cars	27	137	8	172	13	8	25	46	7	117	12	136	3	5	3	11	365
% Cars	100	97.9	100	98.3	100	100	100	100	100	98.3	100	98.6	100	100	100	100	98.6
Trucks	0	3	0	3	0	0	0	0	0	2	0	2	0	0	0	0	5
% Trucks	0	2.1	0	1.7	0	0	0	0	0	1.7	0	1.4	0	0	0	0	1.4

Accurate Counts
978-664-2565

File Name : 51784001
Site Code : 51784001
Start Date : 11/10/2007
Page No : 2

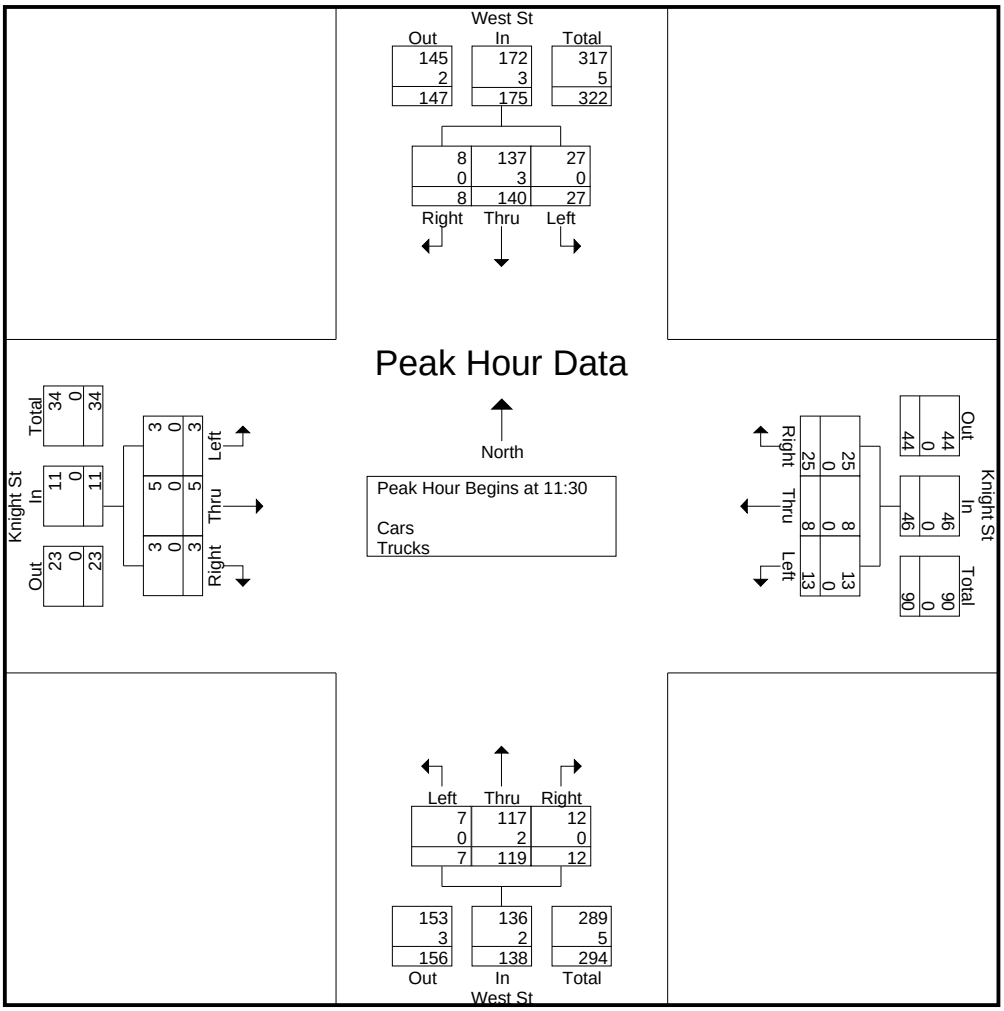

Peak Hour Analysis From 10:00 to 13:45 - Peak 1 of 1

Peak Hour for Each Approach Begins at:

	11:30				11:15				10:00				12:45			
+0 mins.	4	29	0	33	4	2	9	15	1	42	1	44	1	1	1	3
+15 mins.	3	41	1	45	3	4	8	15	1	40	2	43	1	0	1	2
+30 mins.	12	38	4	54	4	1	7	12	0	45	0	45	1	2	3	6
+45 mins.	8	32	3	43	3	2	6	11	0	33	3	36	4	0	0	4
Total Volume	27	140	8	175	14	9	30	53	2	160	6	168	7	3	5	15
% App. Total	15.4	80	4.6		26.4	17	56.6		1.2	95.2	3.6		46.7	20	33.3	
PHF	.563	.854	.500	.810	.875	.563	.833	.883	.500	.889	.500	.933	.438	.375	.417	.625
Cars	27	137	8	172	14	9	30	53	2	156	6	164	7	3	5	15
% Cars	100	97.9	100	98.3	100	100	100	100	100	97.5	100	97.6	100	100	100	100
Trucks	0	3	0	3	0	0	0	0	0	4	0	4	0	0	0	0
% Trucks	0	2.1	0	1.7	0	0	0	0	0	2.5	0	2.4	0	0	0	0

Accurate Counts
978-664-2565

File Name : 51784001
Site Code : 51784001
Start Date : 11/10/2007
Page No : 3

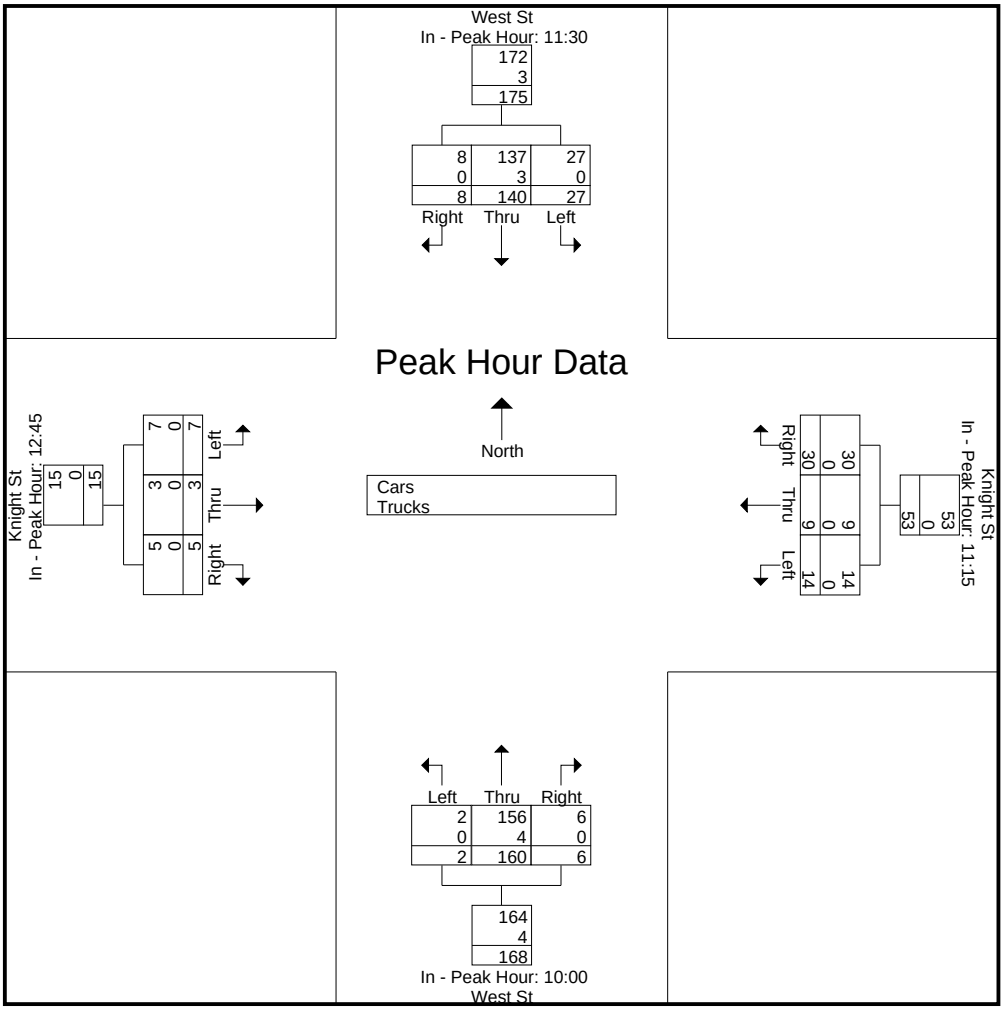

N/S Street : West Street
E/W Street: Knight Street
City/State : Milford, NH
Weather : Clear

Accurate Counts
978-664-2565

File Name : 51784001
Site Code : 51784001
Start Date : 11/10/2007
Page No : 1

Groups Printed- Cars

	West St From North				Knight St From East				West St From South				Knight St From West						
Start Time	Left	Thru	Right	Peds	Left	Thru	Right	Peds	Left	Thru	Right	Peds	Left	Thru	Right	Peds	Exclu. Total	Inclu. Total	Int. Total
10:00	3	21	1	0	1	2	5	0	1	41	1	0	1	2	1	0	0	80	80
10:15	4	24	0	0	1	3	7	0	1	39	2	0	1	3	0	0	0	85	85
10:30	4	34	1	0	0	3	4	0	0	44	0	0	0	2	3	0	0	95	95
10:45	6	33	4	0	2	0	4	1	0	32	3	0	0	0	1	0	1	85	86
Total	17	112	6	0	4	8	20	1	2	156	6	0	2	7	5	0	1	345	346
11:00	4	24	2	0	3	0	4	2	1	28	0	0	0	1	2	0	2	69	71
11:15	4	25	3	0	4	2	9	1	0	30	2	0	2	1	0	0	1	82	83
11:30	4	28	0	0	3	4	8	2	1	29	3	0	0	2	2	0	2	84	86
11:45	3	41	1	0	4	1	7	1	2	27	2	0	0	1	0	0	1	89	90
Total	15	118	6	0	14	7	28	6	4	114	7	0	2	5	4	0	6	324	330
12:00	12	37	4	0	3	2	6	0	2	31	5	0	2	1	0	0	0	105	105
12:15	8	31	3	0	3	1	4	1	2	30	2	0	1	1	1	0	1	87	88
12:30	5	27	1	0	2	3	6	4	0	26	1	0	3	0	0	0	4	74	78
12:45	3	28	3	0	3	1	4	3	1	27	1	0	1	1	1	0	3	74	77
Total	28	123	11	0	11	7	20	8	5	114	9	0	7	3	2	0	8	340	348
13:00	4	26	2	0	2	2	7	7	1	25	2	0	1	0	1	0	7	73	80
13:15	8	33	1	2	2	1	7	0	1	24	3	0	1	2	3	0	2	86	88
13:30	5	16	1	3	1	0	5	5	1	21	1	0	4	0	0	0	8	55	63
13:45	6	24	5	1	1	1	6	4	0	20	2	0	1	1	0	0	5	67	72
Total	23	99	9	6	6	4	25	16	3	90	8	0	7	3	4	0	22	281	303
Grand Total	83	452	32	6	35	26	93	31	14	474	30	0	18	18	15	0	37	1290	1327
Apprch %	14.6	79.7	5.6		22.7	16.9	60.4		2.7	91.5	5.8		35.3	35.3	29.4				
Total %	6.4	35	2.5		2.7	2	7.2		1.1	36.7	2.3		1.4	1.4	1.2		2.8	97.2	

	West St From North				Knight St From East				West St From South				Knight St From West				
Start Time	Left	Thru	Right	App. Total	Left	Thru	Right	App. Total	Left	Thru	Right	App. Total	Left	Thru	Right	App. Total	Int. Total
Peak Hour Analysis From 10:00 to 13:45 - Peak 1 of 1																	
Peak Hour for Entire Intersection Begins at 11:30																	
11:30	4	28	0	32	3	4	8	15	1	29	3	33	0	2	2	4	84
11:45	3	41	1	45	4	1	7	12	2	27	2	31	0	1	0	1	89
12:00	12	37	4	53	3	2	6	11	2	31	5	38	2	1	0	3	105
12:15	8	31	3	42	3	1	4	8	2	30	2	34	1	1	1	3	87
Total Volume	27	137	8	172	13	8	25	46	7	117	12	136	3	5	3	11	365
% App. Total	15.7	79.7	4.7		28.3	17.4	54.3		5.1	86	8.8		27.3	45.5	27.3		
PHF	.563	.835	.500	.811	.813	.500	.781	.767	.875	.944	.600	.895	.375	.625	.375	.688	.869

Accurate Counts
978-664-2565

File Name : 51784001
Site Code : 51784001
Start Date : 11/10/2007
Page No : 2

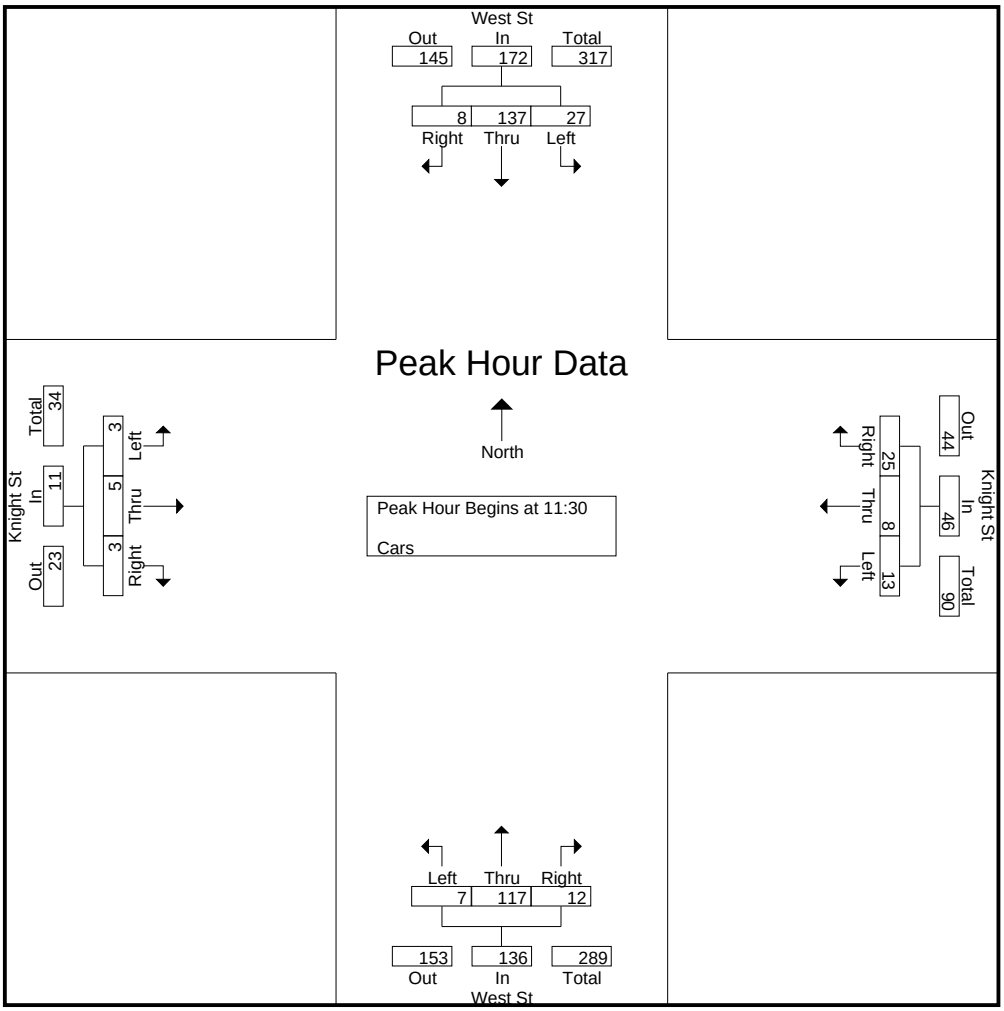

Peak Hour Analysis From 10:00 to 13:45 - Peak 1 of 1

Peak Hour for Each Approach Begins at:

	11:45				11:15				10:00				12:45			
+0 mins.	3	41	1	45	4	2	9	15	1	41	1	43	1	1	1	3
+15 mins.	12	37	4	53	3	4	8	15	1	39	2	42	1	0	1	2
+30 mins.	8	31	3	42	4	1	7	12	0	44	0	44	1	2	3	6
+45 mins.	5	27	1	33	3	2	6	11	0	32	3	35	4	0	0	4
Total Volume	28	136	9	173	14	9	30	53	2	156	6	164	7	3	5	15
% App. Total	16.2	78.6	5.2		26.4	17	56.6		1.2	95.1	3.7		46.7	20	33.3	
PHF	.583	.829	.563	.816	.875	.563	.833	.883	.500	.886	.500	.932	.438	.375	.417	.625

Accurate Counts
978-664-2565

File Name : 51784001
Site Code : 51784001
Start Date : 11/10/2007
Page No : 3

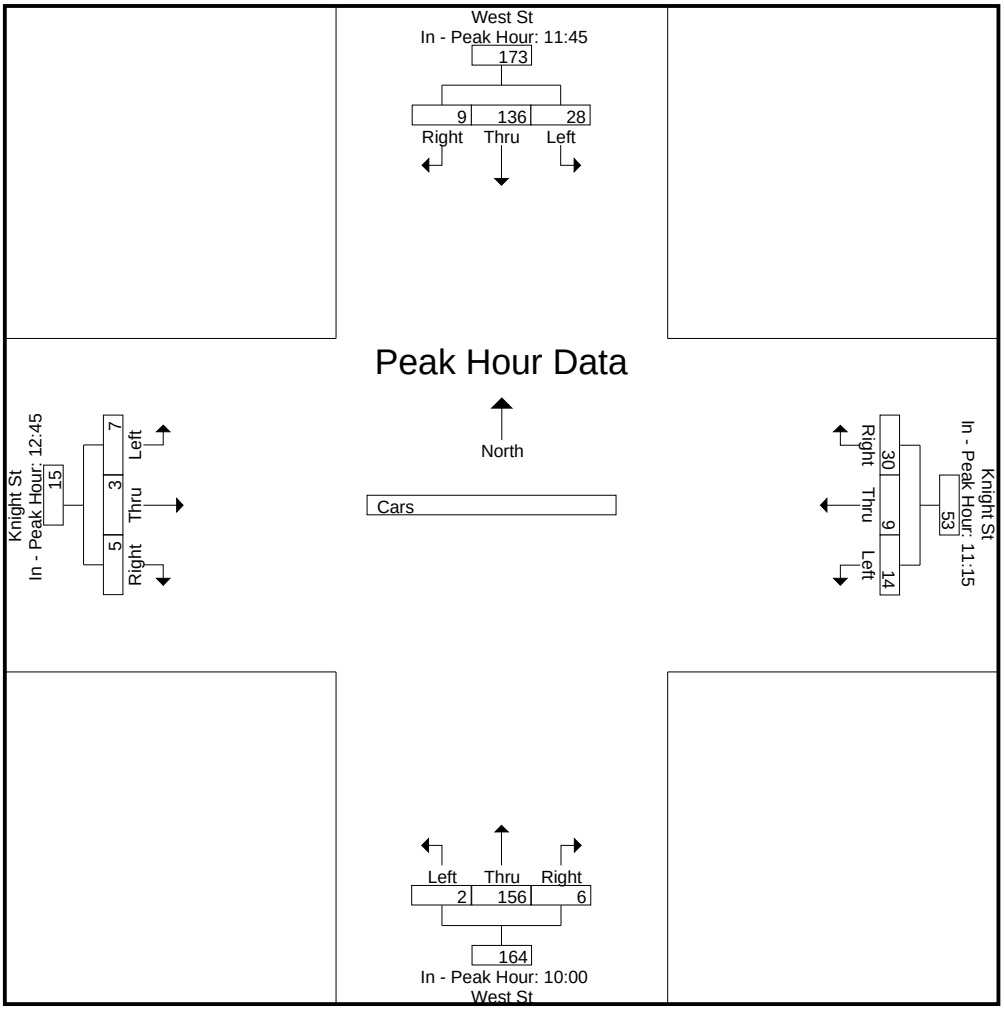

N/S Street : West Street
E/W Street: Knight Street
City/State : Milford, NH
Weather : Clear

Accurate Counts
978-664-2565

File Name : 51784001
Site Code : 51784001
Start Date : 11/10/2007
Page No : 1

Groups Printed- Trucks

	West St From North				Knight St From East				West St From South				Knight St From West						
Start Time	Left	Thru	Right	Peds	Left	Thru	Right	Peds	Left	Thru	Right	Peds	Left	Thru	Right	Peds	Exclu. Total	Inclu. Total	Int. Total
10:00	0	1	0	0	0	0	0	0	0	1	0	0	0	0	0	0	0	2	2
10:15	0	0	0	0	0	0	0	0	0	1	0	0	0	0	0	0	0	1	1
10:30	0	1	0	0	1	0	1	0	0	1	0	0	0	0	0	0	0	4	4
10:45	0	3	0	0	0	0	0	0	0	1	0	0	0	0	0	0	0	4	4
Total	0	5	0	0	1	0	1	0	0	4	0	0	0	0	0	0	0	11	11
11:00	0	1	0	0	0	0	0	0	0	0	0	0	0	0	0	0	0	1	1
11:15	0	0	0	0	0	0	0	0	0	1	0	0	0	0	0	0	0	1	1
11:30	0	1	0	0	0	0	0	0	0	0	0	0	0	0	0	0	0	1	1
11:45	0	0	0	0	0	0	0	0	0	1	0	0	0	0	0	0	0	1	1
Total	0	2	0	0	0	0	0	0	0	2	0	0	0	0	0	0	0	4	4
12:00	0	1	0	0	0	0	0	0	0	0	0	0	0	0	0	0	0	1	1
12:15	0	1	0	0	0	0	0	0	0	1	0	0	0	0	0	0	0	2	2
12:30	0	0	0	0	0	0	0	0	0	1	0	0	0	0	0	0	0	1	1
12:45	0	0	0	0	0	0	0	0	0	0	0	0	0	0	0	0	0	0	0
Total	0	2	0	0	0	0	0	0	0	2	0	0	0	0	0	0	0	4	4
13:00	0	0	0	0	0	0	0	0	0	1	0	0	0	0	0	0	0	1	1
13:15	0	0	0	0	0	0	0	0	1	0	0	0	0	0	0	0	0	1	1
13:30	0	1	0	0	0	0	0	0	0	0	0	0	0	0	0	0	0	1	1
13:45	0	0	0	0	0	0	1	0	0	1	0	0	0	0	0	0	0	2	2
Total	0	1	0	0	0	0	1	0	1	2	0	0	0	0	0	0	0	5	5
Grand Total	0	10	0	0	1	0	2	0	1	10	0	0	0	0	0	0	0	24	24
Apprch %	0	100	0		33.3	0	66.7		9.1	90.9	0		0	0	0				
Total %	0	41.7	0		4.2	0	8.3		4.2	41.7	0		0	0	0		0	100	

	West St From North				Knight St From East				West St From South				Knight St From West				
Start Time	Left	Thru	Right	App. Total	Left	Thru	Right	App. Total	Left	Thru	Right	App. Total	Left	Thru	Right	App. Total	Int. Total
Peak Hour Analysis From 10:00 to 13:45 - Peak 1 of 1																	
Peak Hour for Entire Intersection Begins at 10:00																	
10:00	0	1	0	1	0	0	0	0	0	1	0	1	0	0	0	0	2
10:15	0	0	0	0	0	0	0	0	0	1	0	1	0	0	0	0	1
10:30	0	1	0	1	1	0	1	2	0	1	0	1	0	0	0	0	4
10:45	0	3	0	3	0	0	0	0	0	1	0	1	0	0	0	0	4
Total Volume	0	5	0	5	1	0	1	2	0	4	0	4	0	0	0	0	11
% App. Total	0	100	0		50	0	50		0	100	0		0	0	0		
PHF	.000	.417	.000	.417	.250	.000	.250	.250	.000	1.000	.000	1.000	.000	.000	.000	.000	.688

Accurate Counts
978-664-2565

File Name : 51784001
Site Code : 51784001
Start Date : 11/10/2007
Page No : 2

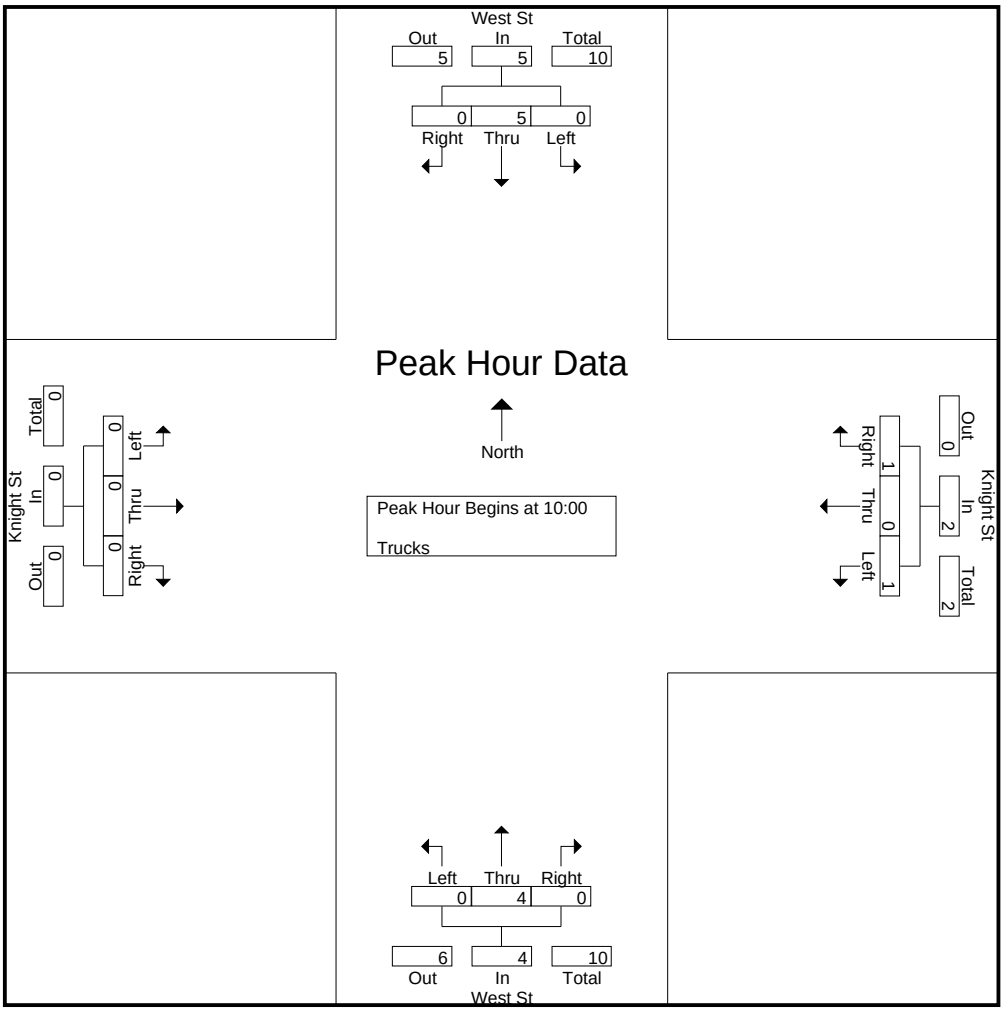

Peak Hour Analysis From 10:00 to 13:45 - Peak 1 of 1

Peak Hour for Each Approach Begins at:

	10:00				10:00				10:00				10:00			
+0 mins.	0	1	0	1	0	0	0	0	0	1	0	1	0	0	0	0
+15 mins.	0	0	0	0	0	0	0	0	0	1	0	1	0	0	0	0
+30 mins.	0	1	0	1	1	0	1	2	0	1	0	1	0	0	0	0
+45 mins.	0	3	0	3	0	0	0	0	0	1	0	1	0	0	0	0
Total Volume	0	5	0	5	1	0	1	2	0	4	0	4	0	0	0	0
% App. Total	0	100	0		50	0	50		0	100	0		0	0	0	
PHF	.000	.417	.000	.417	.250	.000	.250	.250	.000	1.000	.000	1.000	.000	.000	.000	.000

Accurate Counts
978-664-2565

File Name : 51784001
Site Code : 51784001
Start Date : 11/10/2007
Page No : 3

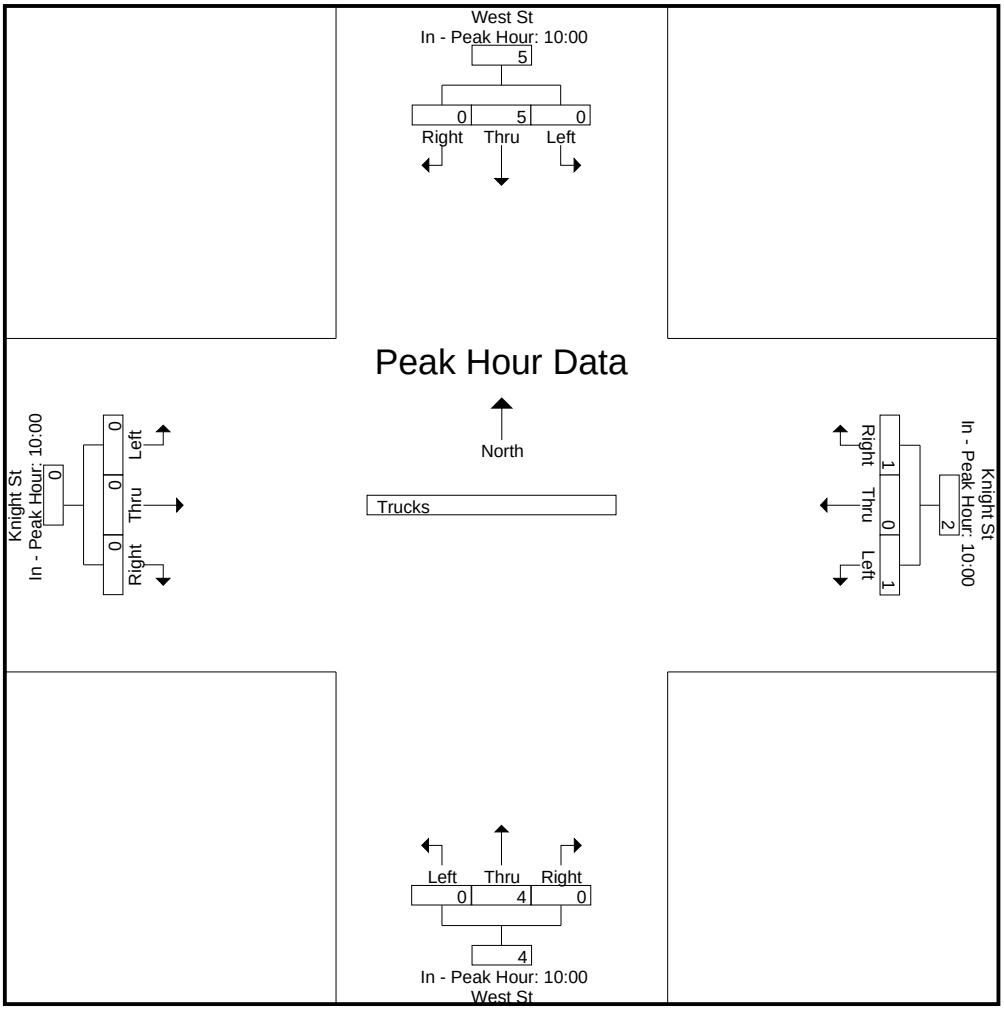

Attachment D-3

Automatic Traffic Recorder Data – Route 101A west of Cottage Street

Accurate Counts
978-664-2565

Location : Route 101A West of
Location : Cottage Street
City/State: Milford, NH
Counter : 13647

51784001
Site Code: 51784001

Start Time	06-May-0 Sat	EB Morning	EB Afternoon	Hour Totals Morning	Hour Totals Afternoon	WB Morning	WB Afternoon	Hour Totals Morning	Hour Totals Afternoon	Combined Totals Morning	Combined Totals Afternoon
12:00		21	166			29	158				
12:15		12	149			23	170				
12:30		38	156			23	167				
12:45		11	192	82	663	17	139	92	634	174	1297
01:00		8	182			14	175				
01:15		12	155			7	142				
01:30		7	141			9	166				
01:45		6	158	33	636	18	168	48	651	81	1287
02:00		6	145			5	169				
02:15		8	141			7	116				
02:30		4	162			5	147				
02:45		2	131	20	579	2	168	19	600	39	1179
03:00		4	146			4	165				
03:15		4	172			7	130				
03:30		6	139			4	174				
03:45		3	139	17	596	13	123	28	592	45	1188
04:00		9	138			1	147				
04:15		4	140			6	144				
04:30		12	149			5	139				
04:45		8	147	33	574	10	120	22	550	55	1124
05:00		10	169			8	134				
05:15		15	158			16	127				
05:30		19	132			15	164				
05:45		29	124	73	583	15	135	54	560	127	1143
06:00		24	115			20	118				
06:15		37	118			26	140				
06:30		42	120			41	132				
06:45		48	100	151	453	42	114	129	504	280	957
07:00		74	116			55	132				
07:15		79	111			65	110				
07:30		85	90			104	112				
07:45		101	81	339	398	99	104	323	458	662	856
08:00		99	81			83	86				
08:15		101	68			95	82				
08:30		108	68			120	91				
08:45		128	60	436	277	134	77	432	336	868	613
09:00		143	57			111	57				
09:15		131	63			102	73				
09:30		141	84			142	68				
09:45		137	42	552	246	136	45	491	243	1043	489
10:00		174	57			128	47				
10:15		160	36			108	39				
10:30		153	38			162	45				
10:45		149	36	636	167	144	35	542	166	1178	333
11:00		162	28			159	44				
11:15		160	35			170	28				
11:30		162	17			132	45				
11:45		173	32	657	112	169	28	630	145	1287	257
Total		3029	5284			2810	5439			5839	10723
Percent		36.4%	63.6%			34.1%	65.9%			35.3%	64.7%

Accurate Counts
978-664-2565

Location : Route 101A West of
Location : Cottage Street
City/State: Milford, NH
Counter : 13647

51784001
Site Code: 51784001

Start Time	07-May-0 Sun	EB Morning	EB Afternoon	Hour Totals Morning	Hour Totals Afternoon	WB Morning	WB Afternoon	Hour Totals Morning	Hour Totals Afternoon	Combined Totals Morning	Combined Totals Afternoon
12:00		44	141			43	132				
12:15		21	168			40	139				
12:30		38	157			21	144				
12:45		24	131	127	597	23	154	127	569	254	1166
01:00		8	135			20	158				
01:15		12	163			7	161				
01:30		6	146			12	154				
01:45		5	166	31	610	12	137	51	610	82	1220
02:00		6	158			10	137				
02:15		9	138			11	110				
02:30		2	133			5	134				
02:45		5	142	22	571	6	130	32	511	54	1082
03:00		4	126			9	139				
03:15		1	146			6	144				
03:30		6	132			4	141				
03:45		4	152	15	556	8	109	27	533	42	1089
04:00		2	143			4	142				
04:15		6	137			2	113				
04:30		9	129			4	120				
04:45		3	108	20	517	3	144	13	519	33	1036
05:00		4	127			2	118				
05:15		13	108			4	111				
05:30		13	92			7	107				
05:45		16	119	46	446	10	88	23	424	69	870
06:00		21	89			12	107				
06:15		21	84			15	118				
06:30		28	91			35	94				
06:45		29	75	99	339	31	104	93	423	192	762
07:00		46	81			30	95				
07:15		38	87			28	87				
07:30		41	87			49	89				
07:45		51	83	176	338	39	79	146	350	322	688
08:00		61	67			41	84				
08:15		75	88			48	75				
08:30		84	60			62	64				
08:45		72	67	292	282	89	70	240	293	532	575
09:00		75	52			95	43				
09:15		89	41			90	31				
09:30		111	26			106	51				
09:45		101	29	376	148	142	36	433	161	809	309
10:00		111	26			117	23				
10:15		128	28			136	32				
10:30		123	20			116	33				
10:45		117	9	479	83	103	12	472	100	951	183
11:00		129	18			99	19				
11:15		103	16			106	22				
11:30		129	8			124	20				
11:45		141	4	502	46	149	8	478	69	980	115
Total		2185	4533			2135	4562			4320	9095
Percent		32.5%	67.5%			31.9%	68.1%			32.2%	67.8%

Accurate Counts
978-664-2565

Location : Route 101A West of
Location : Cottage Street
City/State: Milford, NH
Counter : 13647

51784001
Site Code: 51784001

Start Time	08-May-0 Mon	EB Morning	EB Afternoon	Hour Totals Morning	Hour Totals Afternoon	WB Morning	WB Afternoon	Hour Totals Morning	Hour Totals Afternoon	Combined Totals Morning	Combined Totals Afternoon
12:00		7	128			6	138				
12:15		3	156			8	170				
12:30		1	135			4	174				
12:45		2	152	13	571	7	127	25	609	38	1180
01:00		4	126			6	132				
01:15		4	141			3	125				
01:30		6	137			2	121				
01:45		10	120	24	524	13	132	24	510	48	1034
02:00		9	142			1	140				
02:15		1	146			2	119				
02:30		1	161			1	160				
02:45		1	138	12	587	1	164	5	583	17	1170
03:00		3	154			4	128				
03:15		4	166			0	170				
03:30		7	164			4	154				
03:45		2	141	16	625	2	199	10	651	26	1276
04:00		7	182			5	178				
04:15		11	172			10	158				
04:30		11	172			6	159				
04:45		14	159	43	685	5	168	26	663	69	1348
05:00		25	178			7	175				
05:15		20	159			17	167				
05:30		25	171			29	167				
05:45		56	171	126	679	52	149	105	658	231	1337
06:00		63	119			40	199				
06:15		84	126			62	176				
06:30		72	135			89	152				
06:45		113	119	332	499	102	135	293	662	625	1161
07:00		127	100			121	121				
07:15		168	95			137	112				
07:30		180	94			121	115				
07:45		160	87	635	376	119	89	498	437	1133	813
08:00		149	99			117	91				
08:15		161	66			99	74				
08:30		135	59			144	80				
08:45		134	53	579	277	126	79	486	324	1065	601
09:00		109	48			104	68				
09:15		123	50			98	68				
09:30		111	28			117	49				
09:45		93	39	436	165	101	36	420	221	856	386
10:00		100	39			107	29				
10:15		130	23			102	36				
10:30		116	15			141	32				
10:45		129	17	475	94	121	34	471	131	946	225
11:00		127	28			101	32				
11:15		119	19			142	17				
11:30		143	15			142	9				
11:45		116	8	505	70	126	15	511	73	1016	143
Total		3196	5152			2874	5522			6070	10674
Percent		38.3%	61.7%			34.2%	65.8%			36.3%	63.7%

Accurate Counts
978-664-2565

Location : Route 101A West of
Location : Cottage Street
City/State: Milford, NH
Counter : 13647

51784001
Site Code: 51784001

Start Time	09-May-0 Tue	EB Morning	EB Afternoon	Hour Totals Morning	Hour Totals Afternoon	WB Morning	WB Afternoon	Hour Totals Morning	Hour Totals Afternoon	Combined Totals Morning	Combined Totals Afternoon
12:00		9	185			15	157				
12:15		6	144			7	162				
12:30		4	146			9	151				
12:45		4	157	23	632	11	130	42	600	65	1232
01:00		3	130			12	147				
01:15		2	123			4	134				
01:30		1	126			5	133				
01:45		3	133	9	512	5	132	26	546	35	1058
02:00		12	137			5	153				
02:15		1	150			0	145				
02:30		3	176			1	142				
02:45		4	125	20	588	4	181	10	621	30	1209
03:00		1	159			1	185				
03:15		7	140			5	161				
03:30		5	186			1	162				
03:45		6	149	19	634	5	175	12	683	31	1317
04:00		7	140			2	154				
04:15		4	174			7	157				
04:30		9	152			8	171				
04:45		17	137	37	603	6	171	23	653	60	1256
05:00		21	151			9	172				
05:15		24	175			31	182				
05:30		41	156			37	156				
05:45		58	111	144	593	43	172	120	682	264	1275
06:00		65	121			35	158				
06:15		94	105			64	132				
06:30		74	108			72	138				
06:45		103	110	336	444	100	171	271	599	607	1043
07:00		127	79			120	95				
07:15		178	90			121	108				
07:30		151	95			115	92				
07:45		140	74	596	338	135	77	491	372	1087	710
08:00		171	54			130	79				
08:15		166	67			95	80				
08:30		144	54			129	70				
08:45		136	50	617	225	124	57	478	286	1095	511
09:00		128	52			123	51				
09:15		130	39			88	59				
09:30		103	30			100	44				
09:45		113	26	474	147	88	51	399	205	873	352
10:00		103	25			129	25				
10:15		119	20			122	30				
10:30		111	18			91	32				
10:45		126	22	459	85	129	18	471	105	930	190
11:00		121	16			130	16				
11:15		157	15			140	15				
11:30		121	9			125	12				
11:45		149	11	548	51	121	14	516	57	1064	108
Total		3282	4852			2859	5409			6141	10261
Percent		40.3%	59.7%			34.6%	65.4%			37.4%	62.6%

Accurate Counts
978-664-2565

Location : Route 101A West of
Location : Cottage Street
City/State: Milford, NH
Counter : 13647

51784001
Site Code: 51784001

Start Time	10-May-0 Wed	EB Morning	EB Afternoon	Hour Totals Morning	Hour Totals Afternoon	WB Morning	WB Afternoon	Hour Totals Morning	Hour Totals Afternoon	Combined Totals Morning	Combined Totals Afternoon
12:00		5	145			8	129				
12:15		18	159			9	145				
12:30		5	130			5	163				
12:45		5	165	33	599	7	123	29	560	62	1159
01:00		8	152			10	152				
01:15		3	133			5	123				
01:30		6	115			4	125				
01:45		5	108	22	508	5	129	24	529	46	1037
02:00		7	124			7	133				
02:15		4	141			3	134				
02:30		3	166			2	164				
02:45		5	140	19	571	3	156	15	587	34	1158
03:00		4	149			3	173				
03:15		4	176			2	164				
03:30		4	179			1	158				
03:45		6	139	18	643	1	192	7	687	25	1330
04:00		7	177			4	170				
04:15		3	142			5	143				
04:30		12	137			6	177				
04:45		15	150	37	606	7	169	22	659	59	1265
05:00		20	168			8	168				
05:15		32	144			20	179				
05:30		32	153			36	151				
05:45		51	113	135	578	51	199	115	697	250	1275
06:00		49	120			29	170				
06:15		89	134			55	113				
06:30		79	110			91	117				
06:45		125	93	342	457	96	102	271	502	613	959
07:00		116	111			108	95				
07:15		168	115			129	104				
07:30		168	113			112	106				
07:45		145	65	597	404	123	74	472	379	1069	783
08:00		144	70			107	93				
08:15		157	66			116	76				
08:30		131	54			126	80				
08:45		121	54	553	244	112	72	461	321	1014	565
09:00		112	45			101	51				
09:15		128	40			111	57				
09:30		130	37			85	59				
09:45		121	32	491	154	107	41	404	208	895	362
10:00		96	30			112	36				
10:15		98	35			128	31				
10:30		138	19			105	37				
10:45		103	14	435	98	115	26	460	130	895	228
11:00		124	20			127	20				
11:15		135	14			131	9				
11:30		164	12			125	22				
11:45		123	12	546	58	149	15	532	66	1078	124
Total		3228	4920			2812	5325			6040	10245
Percent		39.6%	60.4%			34.6%	65.4%			37.1%	62.9%

Accurate Counts
978-664-2565

Location : Route 101A West of
Location : Cottage Street
City/State: Milford, NH
Counter : 13647

51784001
Site Code: 51784001

Start	11-May-0	EB		Hour Totals		WB		Hour Totals		Combined Totals	
Time	Thu	Morning	Afternoon	Morning	Afternoon	Morning	Afternoon	Morning	Afternoon	Morning	Afternoon
12:00		9	153			13	153				
12:15		7	154			11	164				
12:30		7	147			9	168				
12:45		2	156	25	610	4	134	37	619	62	1229
01:00		4	142			8	142				
01:15		5	140			12	126				
01:30		3	133			8	134				
01:45		6	129	18	544	9	141	37	543	55	1087
02:00		6	102			15	172				
02:15		4	167			2	166				
02:30		8	180			3	152				
02:45		3	118	21	567	5	176	25	666	46	1233
03:00		3	155			4	186				
03:15		3	174			3	163				
03:30		8	191			6	162				
03:45		7	155	21	675	6	180	19	691	40	1366
04:00		7	161			1	191				
04:15		7	168			11	181				
04:30		15	163			9	175				
04:45		16	144	45	636	4	172	25	719	70	1355
05:00		19	158			7	184				
05:15		27	191			24	170				
05:30		39	151			30	180				
05:45		55	143	140	643	52	178	113	712	253	1355
06:00		70	130			38	182				
06:15		83	117			55	171				
06:30		92	128			81	117				
06:45		120	113	365	488	117	140	291	610	656	1098
07:00		132	107			94	150				
07:15		168	87			117	111				
07:30		156	114			143	103				
07:45		147	105	603	413	119	91	473	455	1076	868
08:00		145	84			115	91				
08:15		152	77			105	75				
08:30		149	66			135	80				
08:45		128	50	574	277	101	80	456	326	1030	603
09:00		129	49			127	69				
09:15		139	59			100	55				
09:30		98	49			104	55				
09:45		141	27	507	184	123	46	454	225	961	409
10:00		120	33			98	31				
10:15		107	31			112	47				
10:30		115	33			132	37				
10:45		148	25	490	122	121	24	463	139	953	261
11:00		126	22			131	25				
11:15		139	20			168	18				
11:30		128	15			142	24				
11:45		141	16	534	73	146	14	587	81	1121	154
Total		3343	5232			2980	5786			6323	11018
Percent		39.0%	61.0%			34.0%	66.0%			36.5%	63.5%

Accurate Counts
978-664-2565

Location : Route 101A West of
Location : Cottage Street
City/State: Milford, NH
Counter : 13647

51784001
Site Code: 51784001

Start Time	12-May-0 Fri	EB Morning	EB Afternoon	Hour Totals Morning	Hour Totals Afternoon	WB Morning	WB Afternoon	Hour Totals Morning	Hour Totals Afternoon	Combined Totals Morning	Combined Totals Afternoon
12:00		14	161			14	152				
12:15		10	178			7	182				
12:30		6	152			9	155				
12:45		3	180	33	671	4	139	34	628	67	1299
01:00		5	162			9	174				
01:15		5	159			8	146				
01:30		7	134			9	125				
01:45		5	122	22	577	8	155	34	600	56	1177
02:00		4	142			5	190				
02:15		5	167			7	175				
02:30		6	216			6	173				
02:45		4	141	19	666	2	173	20	711	39	1377
03:00		3	170			3	180				
03:15		4	180			3	167				
03:30		11	203			8	188				
03:45		4	157	22	710	9	177	23	712	45	1422
04:00		8	167			5	168				
04:15		3	191			8	155				
04:30		10	145			10	191				
04:45		11	162	32	665	5	187	28	701	60	1366
05:00		18	165			17	187				
05:15		32	176			16	178				
05:30		29	164			32	189				
05:45		59	161	138	666	38	166	103	720	241	1386
06:00		61	160			37	167				
06:15		76	132			52	136				
06:30		94	124			83	150				
06:45		109	131	340	547	132	168	304	621	644	1168
07:00		131	124			98	134				
07:15		156	115			113	112				
07:30		182	79			105	113				
07:45		138	70	607	388	116	111	432	470	1039	858
08:00		135	59			115	70				
08:15		163	69			111	85				
08:30		138	59			130	67				
08:45		160	82	596	269	118	90	474	312	1070	581
09:00		134	55			120	68				
09:15		135	51			116	75				
09:30		116	57			123	79				
09:45		107	58	492	221	149	61	508	283	1000	504
10:00		139	47			121	50				
10:15		112	36			135	58				
10:30		139	22			134	49				
10:45		143	31	533	136	112	48	502	205	1035	341
11:00		142	34			135	59				
11:15		161	33			148	29				
11:30		167	18			153	33				
11:45		163	26	633	111	135	36	571	157	1204	268
Total		3467	5627			3033	6120			6500	11747
Percent		38.1%	61.9%			33.1%	66.9%			35.6%	64.4%

Accurate Counts
978-664-2565

Location : Route 101A West of
Location : Cottage Street
City/State: Milford, NH
Counter : 13647

51784001
Site Code: 51784001

Start	13-May-0	EB		Hour Totals		WB		Hour Totals		Combined Totals	
Time	Sat	Morning	Afternoon	Morning	Afternoon	Morning	Afternoon	Morning	Afternoon	Morning	Afternoon
12:00		16	170			19	167				
12:15		13	173			14	149				
12:30		7	151			16	161				
12:45		7	154	43	648	10	144	59	621	102	1269
01:00		16	152			14	160				
01:15		12	135			13	164				
01:30		7	153			14	157				
01:45		4	131	39	571	8	153	49	634	88	1205
02:00		2	119			16	171				
02:15		5	119			2	150				
02:30		5	133			7	138				
02:45		2	135	14	506	8	161	33	620	47	1126
03:00		10	106			3	131				
03:15		15	141			0	139				
03:30		8	119			0	124				
03:45		12	131	45	497	5	127	8	521	53	1018
04:00		7	114			0	140				
04:15		11	125			0	116				
04:30		12	101			0	162				
04:45		15	106	45	446	0	126	0	544	45	990
05:00		12	108			5	112				
05:15		10	115			6	123				
05:30		14	83			14	102				
05:45		38	107	74	413	9	100	34	437	108	850
06:00		22	87			15	123				
06:15		29	101			27	100				
06:30		52	64			28	93				
06:45		33	63	136	315	31	111	101	427	237	742
07:00		50	61			35	93				
07:15		52	76			38	86				
07:30		69	80			31	76				
07:45		103	78	274	295	46	103	150	358	424	653
08:00		97	74			36	75				
08:15		111	64			39	60				
08:30		107	49			67	69				
08:45		138	35	453	222	63	59	205	263	658	485
09:00		191	47			41	52				
09:15		173	51			37	54				
09:30		247	28			2	73				
09:45		267	43	878	169	0	51	80	230	958	399
10:00		196	36			43	38				
10:15		144	31			118	48				
10:30		142	39			140	44				
10:45		166	37	648	143	156	34	457	164	1105	307
11:00		151	19			157	42				
11:15		143	19			177	37				
11:30		147	33			154	34				
11:45		160	19	601	90	154	26	642	139	1243	229
Total		3250	4315			1818	4958			5068	9273
Percent		43.0%	57.0%			26.8%	73.2%			35.3%	64.7%

Accurate Counts
978-664-2565

Location : Route 101A West of
Location : Cottage Street
City/State: Milford, NH
Counter : 13647

51784001
Site Code: 51784001

Start Time	14-May-0 Sun	EB Morning	EB Afternoon	Hour Totals Morning	Hour Totals Afternoon	WB Morning	WB Afternoon	Hour Totals Morning	Hour Totals Afternoon	Combined Totals Morning	Combined Totals Afternoon
12:00		14	112			19	104				
12:15		17	138			32	117				
12:30		16	114			18	120				
12:45		2	147	49	511	14	116	83	457	132	968
01:00		8	*			10	*				
01:15		6	*			15	*				
01:30		4	*			14	*				
01:45		3	*	21	0	6	*	45	0	66	0
02:00		5	*			5	*				
02:15		3	*			7	*				
02:30		3	*			10	*				
02:45		2	*	13	0	4	*	26	0	39	0
03:00		0	*			4	*				
03:15		1	*			2	*				
03:30		6	*			7	*				
03:45		4	*	11	0	4	*	17	0	28	0
04:00		1	*			5	*				
04:15		6	*			4	*				
04:30		11	*			4	*				
04:45		2	*	20	0	4	*	17	0	37	0
05:00		3	*			8	*				
05:15		9	*			4	*				
05:30		12	*			8	*				
05:45		15	*	39	0	10	*	30	0	69	0
06:00		20	*			14	*				
06:15		15	*			20	*				
06:30		27	*			25	*				
06:45		35	*	97	0	29	*	88	0	185	0
07:00		33	*			37	*				
07:15		21	*			19	*				
07:30		36	*			35	*				
07:45		53	*	143	0	71	*	162	0	305	0
08:00		57	*			36	*				
08:15		53	*			48	*				
08:30		55	*			60	*				
08:45		73	*	238	0	48	*	192	0	430	0
09:00		66	*			81	*				
09:15		103	*			70	*				
09:30		81	*			85	*				
09:45		85	*	335	0	100	*	336	0	671	0
10:00		105	*			97	*				
10:15		99	*			91	*				
10:30		114	*			93	*				
10:45		94	*	412	0	101	*	382	0	794	0
11:00		112	*			109	*				
11:15		109	*			100	*				
11:30		115	*			104	*				
11:45		116	*	452	0	101	*	414	0	866	0
Total		1830	511			1792	457			3622	968
Percent		78.2%	21.8%			79.7%	20.3%			78.9%	21.1%
Grand Total		26810	40426			23113	43578			49923	84004
Percent		39.9%	60.1%			34.7%	65.3%			37.3%	62.7%

ADT Not Calculated

Accurate Counts
978-664-2565

Location : Route 101A West of
Location : Cottage Street
City/State: Milford, NH
Counter : 13647

51784001
Site Code: 51784001

Start Time	01-May-06 EB	01-May-06 WB	Tue EB	Tue WB	Wed EB	Wed WB	Thu EB	Thu WB	Fri EB	Fri WB	Sat EB	Sat WB	Sun EB	Sun WB	Week Average EB	Week Average WB
12:00 AM	*	*	*	*	*	*	*	*	*	*	82	92	127	127	104	110
01:00	*	*	*	*	*	*	*	*	*	*	33	48	31	51	32	50
02:00	*	*	*	*	*	*	*	*	*	*	20	19	22	32	21	26
03:00	*	*	*	*	*	*	*	*	*	*	17	28	15	27	16	28
04:00	*	*	*	*	*	*	*	*	*	*	33	22	20	13	26	18
05:00	*	*	*	*	*	*	*	*	*	*	73	54	46	23	60	38
06:00	*	*	*	*	*	*	*	*	*	*	151	129	99	93	125	111
07:00	*	*	*	*	*	*	*	*	*	*	339	323	176	146	258	234
08:00	*	*	*	*	*	*	*	*	*	*	436	432	292	240	364	336
09:00	*	*	*	*	*	*	*	*	*	*	552	491	376	433	464	462
10:00	*	*	*	*	*	*	*	*	*	*	636	542	479	472	558	507
11:00	*	*	*	*	*	*	*	*	*	*	**657**	**630**	**502**	**478**	**580**	**554**
12:00 PM	*	*	*	*	*	*	*	*	*	*	**663**	634	597	569	**630**	602
01:00	*	*	*	*	*	*	*	*	*	*	636	**651**	**610**	**610**	623	**630**
02:00	*	*	*	*	*	*	*	*	*	*	579	600	571	511	575	556
03:00	*	*	*	*	*	*	*	*	*	*	596	592	556	533	576	562
04:00	*	*	*	*	*	*	*	*	*	*	574	550	517	519	546	534
05:00	*	*	*	*	*	*	*	*	*	*	583	560	446	424	514	492
06:00	*	*	*	*	*	*	*	*	*	*	453	504	339	423	396	464
07:00	*	*	*	*	*	*	*	*	*	*	398	458	338	350	368	404
08:00	*	*	*	*	*	*	*	*	*	*	277	336	282	293	280	314
09:00	*	*	*	*	*	*	*	*	*	*	246	243	148	161	197	202
10:00	*	*	*	*	*	*	*	*	*	*	167	166	83	100	125	133
11:00	*	*	*	*	*	*	*	*	*	*	112	145	46	69	79	107
Lane	0	0	0	0	0	0	0	0	0	0	8313	8249	6718	6697	7517	7474
Day	0		0		0		0		0		16562		13415		14991	
AM Peak											11:00	11:00	11:00	11:00	11:00	11:00
Vol.											657	630	502	478	580	554
PM Peak											12:00	13:00	13:00	13:00	12:00	13:00
Vol.											663	651	610	610	630	630

Accurate Counts
978-664-2565

Location : Route 101A West of
Location : Cottage Street
City/State: Milford, NH
Counter : 13647

51784001
Site Code: 51784001

Start Time	08-May-06 EB	08-May-06 WB	Tue EB	Tue WB	Wed EB	Wed WB	Thu EB	Thu WB	Fri EB	Fri WB	Sat EB	Sat WB	Sun EB	Sun WB	Week Average EB	Week Average WB
12:00 AM	13	25	23	42	33	29	25	37	33	34	43	59	49	83	31	44
01:00	24	24	9	26	22	24	18	37	22	34	39	49	21	45	22	34
02:00	12	5	20	10	19	15	21	25	19	20	14	33	13	26	17	19
03:00	16	10	19	12	18	7	21	19	22	23	45	8	11	17	22	14
04:00	43	26	37	23	37	22	45	25	32	28	45	0	20	17	37	20
05:00	126	105	144	120	135	115	140	113	138	103	74	34	39	30	114	89
06:00	332	293	336	271	342	271	365	291	340	304	136	101	97	88	278	231
07:00	**635**	498	596	491	**597**	472	**603**	473	607	432	274	150	143	162	494	383
08:00	579	486	**617**	478	553	461	574	456	596	474	453	205	238	192	516	393
09:00	436	420	474	399	491	404	507	454	492	508	**878**	80	335	336	516	372
10:00	475	471	459	471	435	460	490	463	533	502	648	457	412	382	493	458
11:00	505	**511**	548	**516**	546	**532**	534	**587**	**633**	**571**	601	**642**	**452**	**414**	**546**	**539**
12:00 PM	571	609	632	600	599	560	610	619	671	628	**648**	621	**511**	**457**	606	585
01:00	524	510	512	546	508	529	544	543	577	600	571	**634**	*	*	539	560
02:00	587	583	588	621	571	587	567	666	666	711	506	620	*	*	581	631
03:00	625	651	**634**	**683**	**643**	687	**675**	691	**710**	712	497	521	*	*	**631**	**658**
04:00	**685**	**663**	603	653	606	659	636	**719**	665	701	446	544	*	*	607	656
05:00	679	658	593	682	578	**697**	643	712	666	**720**	413	437	*	*	595	651
06:00	499	662	444	599	457	502	488	610	547	621	315	427	*	*	458	570
07:00	376	437	338	372	404	379	413	455	388	470	295	358	*	*	369	412
08:00	277	324	225	286	244	321	277	326	269	312	222	263	*	*	252	305
09:00	165	221	147	205	154	208	184	225	221	283	169	230	*	*	173	229
10:00	94	131	85	105	98	130	122	139	136	205	143	164	*	*	113	146
11:00	70	73	51	57	58	66	73	81	111	157	90	139	*	*	76	96
Lane	8348	8396	8134	8268	8148	8137	8575	8766	9094	9153	7565	6776	2341	2249	8086	8095
Day	16744		16402		16285		17341		18247		14341		4590		16181	
AM Peak	07:00	11:00	08:00	11:00	07:00	11:00	07:00	11:00	11:00	11:00	09:00	11:00	11:00	11:00	11:00	11:00
Vol.	635	511	617	516	597	532	603	587	633	571	878	642	452	414	546	539
PM Peak	16:00	16:00	15:00	15:00	15:00	17:00	15:00	16:00	15:00	17:00	12:00	13:00	12:00	12:00	15:00	15:00
Vol.	685	663	634	683	643	697	675	719	710	720	648	634	511	457	631	658
Comb. Total	16744		16402		16285		17341		18247		30903		18005		31172	
ADT	Not Calculated															

Accurate Counts
978-664-2565

Location : Route 101A West of
Location : Cottage Street
City/State: Milford, NH
Counter : 13647

517840A1
Site Code: 51784001

Start Time	18-May-0 Thu	EB Morning	EB Afternoon	Hour Totals Morning	Hour Totals Afternoon	WB Morning	WB Afternoon	Hour Totals Morning	Hour Totals Afternoon	Combined Totals Morning	Combined Totals Afternoon
12:00		*	131			*	102				
12:15		*	113			*	128				
12:30		*	113			*	118				
12:45		*	93	0	450	*	128	0	476	0	926
01:00		*	132			*	107				
01:15		*	117			*	112				
01:30		*	119			*	95				
01:45		*	115	0	483	*	96	0	410	0	893
02:00		*	105			*	116				
02:15		*	122			*	103				
02:30		*	115			*	87				
02:45		*	96	0	438	*	95	0	401	0	839
03:00		*	116			*	111				
03:15		*	145			*	101				
03:30		*	133			*	103				
03:45		*	119	0	513	*	98	0	413	0	926
04:00		*	126			*	103				
04:15		*	112			*	126				
04:30		*	109			*	132				
04:45		*	117	0	464	*	128	0	489	0	953
05:00		*	148			*	132				
05:15		*	128			*	75				
05:30		*	130			*	103				
05:45		*	118	0	524	*	122	0	432	0	956
06:00		*	101			*	157				
06:15		*	112			*	138				
06:30		*	101			*	132				
06:45		*	107	0	421	*	152	0	579	0	1000
07:00		*	113			*	116				
07:15		*	95			*	109				
07:30		*	87			*	129				
07:45		*	98	0	393	*	84	0	438	0	831
08:00		*	88			*	112				
08:15		*	95			*	96				
08:30		*	78			*	83				
08:45		*	67	0	328	*	78	0	369	0	697
09:00		*	82			*	72				
09:15		*	57			*	71				
09:30		*	40			*	71				
09:45		*	39	0	218	*	60	0	274	0	492
10:00		88	45			0	36				
10:15		92	31			92	56				
10:30		107	25			88	32				
10:45		110	24	397	125	98	31	278	155	675	280
11:00		125	26			100	31				
11:15		113	24			108	22				
11:30		121	12			114	26				
11:45		116	9	475	71	101	24	423	103	898	174
Total		872	4428			701	4539			1573	8967
Percent		16.5%	83.5%			13.4%	86.6%			14.9%	85.1%

Accurate Counts
978-664-2565

Location : Route 101A West of
Location : Cottage Street
City/State: Milford, NH
Counter : 13647

517840A1
Site Code: 51784001

Start	19-May-0	EB		Hour Totals		WB		Hour Totals		Combined Totals	
Time	Fri	Morning	Afternoon	Morning	Afternoon	Morning	Afternoon	Morning	Afternoon	Morning	Afternoon
12:00		13	95			12	109				
12:15		10	106			16	94				
12:30		12	107			11	104				
12:45		7	112	42	420	12	115	51	422	93	842
01:00		7	118			11	122				
01:15		3	105			12	106				
01:30		7	94			5	106				
01:45		4	86	21	403	12	117	40	451	61	854
02:00		5	116			8	133				
02:15		6	126			3	101				
02:30		6	130			9	116				
02:45		5	84	22	456	4	138	24	488	46	944
03:00		5	119			1	115				
03:15		7	128			3	119				
03:30		6	121			7	110				
03:45		6	129	24	497	4	120	15	464	39	961
04:00		4	143			4	124				
04:15		9	138			8	115				
04:30		14	103			11	138				
04:45		14	121	41	505	6	134	29	511	70	1016
05:00		24	126			12	151				
05:15		39	120			17	124				
05:30		35	105			22	150				
05:45		44	139	142	490	28	118	79	543	221	1033
06:00		64	104			37	116				
06:15		74	110			47	141				
06:30		99	113			68	137				
06:45		104	102	341	429	96	143	248	537	589	966
07:00		107	106			94	117				
07:15		118	97			108	126				
07:30		125	97			71	104				
07:45		90	89	440	389	102	101	375	448	815	837
08:00		125	84			87	112				
08:15		112	62			71	102				
08:30		93	82			86	89				
08:45		89	79	419	307	101	91	345	394	764	701
09:00		106	61			72	74				
09:15		84	61			81	74				
09:30		92	63			86	63				
09:45		95	54	377	239	73	62	312	273	689	512
10:00		89	71			71	58				
10:15		90	61			92	51				
10:30		82	47			89	60				
10:45		93	37	354	216	90	47	342	216	696	432
11:00		99	54			86	43				
11:15		92	31			87	32				
11:30		93	22			117	36				
11:45		101	27	385	134	104	33	394	144	779	278
Total		2608	4485			2254	4891			4862	9376
Percent		36.8%	63.2%			31.5%	68.5%			34.1%	65.9%

Accurate Counts
978-664-2565

Location : Route 101A West of
Location : Cottage Street
City/State: Milford, NH
Counter : 13647

517840A1
Site Code: 51784001

Start Time	20-May-0 Sat	EB Morning	EB Afternoon	Hour Totals Morning	Hour Totals Afternoon	WB Morning	WB Afternoon	Hour Totals Morning	Hour Totals Afternoon	Combined Totals Morning	Combined Totals Afternoon
12:00		23	124			30	114				
12:15		14	100			25	125				
12:30		26	132			26	112				
12:45		9	120	72	476	14	118	95	469	167	945
01:00		27	114			11	127				
01:15		7	108			19	121				
01:30		4	93			11	118				
01:45		6	133	44	448	7	122	48	488	92	936
02:00		5	101			11	118				
02:15		4	106			4	105				
02:30		2	115			3	136				
02:45		2	105	13	427	7	102	25	461	38	888
03:00		9	109			5	135				
03:15		5	137			5	118				
03:30		5	115			3	131				
03:45		3	113	22	474	3	114	16	498	38	972
04:00		4	104			2	117				
04:15		4	99			6	102				
04:30		4	119			7	116				
04:45		6	100	18	422	2	115	17	450	35	872
05:00		11	99			9	108				
05:15		18	115			16	99				
05:30		22	95			12	101				
05:45		27	102	78	411	16	98	53	406	131	817
06:00		39	116			25	109				
06:15		39	103			29	107				
06:30		41	88			43	99				
06:45		54	80	173	387	35	104	132	419	305	806
07:00		76	98			41	89				
07:15		63	103			45	106				
07:30		71	64			45	104				
07:45		82	75	292	340	70	93	201	392	493	732
08:00		71	68			79	74				
08:15		85	61			95	75				
08:30		125	60			105	58				
08:45		120	61	401	250	95	63	374	270	775	520
09:00		113	68			91	54				
09:15		116	71			91	60				
09:30		134	59			110	54				
09:45		114	45	477	243	106	62	398	230	875	473
10:00		123	48			115	45				
10:15		113	49			101	61				
10:30		126	32			124	34				
10:45		129	22	491	151	133	35	473	175	964	326
11:00		125	34			107	38				
11:15		132	38			89	32				
11:30		119	19			91	37				
11:45		128	12	504	103	108	26	395	133	899	236
Total		2585	4132			2227	4391			4812	8523
Percent		38.5%	61.5%			33.7%	66.3%			36.1%	63.9%

Accurate Counts
978-664-2565

Location : Route 101A West of
Location : Cottage Street
City/State: Milford, NH
Counter : 13647

517840A1
Site Code: 51784001

Start	21-May-0	EB		Hour Totals		WB		Hour Totals		Combined Totals	
Time	Sun	Morning	Afternoon	Morning	Afternoon	Morning	Afternoon	Morning	Afternoon	Morning	Afternoon
12:00		15	117			28	134				
12:15		10	132			17	109				
12:30		45	118			20	120				
12:45		16	130	86	497	12	116	77	479	163	976
01:00		7	122			8	97				
01:15		37	133			14	126				
01:30		11	111			13	126				
01:45		3	128	58	494	12	94	47	443	105	937
02:00		5	107			9	95				
02:15		6	98			6	123				
02:30		3	120			7	106				
02:45		6	102	20	427	13	146	35	470	55	897
03:00		6	100			4	114				
03:15		5	120			6	102				
03:30		4	88			2	110				
03:45		2	101	17	409	4	102	16	428	33	837
04:00		2	72			3	104				
04:15		4	92			3	89				
04:30		4	72			7	86				
04:45		11	70	21	306	5	105	18	384	39	690
05:00		4	93			3	75				
05:15		16	84			4	89				
05:30		8	96			12	101				
05:45		22	84	50	357	11	100	30	365	80	722
06:00		19	73			9	89				
06:15		17	56			22	97				
06:30		29	60			24	80				
06:45		37	76	102	265	32	86	87	352	189	617
07:00		47	68			19	53				
07:15		39	62			39	74				
07:30		46	53			26	76				
07:45		47	50	179	233	45	69	129	272	308	505
08:00		55	61			46	60				
08:15		78	58			39	66				
08:30		67	74			57	43				
08:45		80	47	280	240	73	49	215	218	495	458
09:00		94	36			82	38				
09:15		91	26			93	49				
09:30		83	31			98	22				
09:45		92	16	360	109	106	22	379	131	739	240
10:00		99	23			79	37				
10:15		100	19			99	18				
10:30		96	19			109	28				
10:45		95	15	390	76	107	20	394	103	784	179
11:00		112	18			92	15				
11:15		111	10			97	12				
11:30		122	6			106	12				
11:45		116	6	461	40	97	11	392	50	853	90
Total		2024	3453			1819	3695			3843	7148
Percent		37.0%	63.0%			33.0%	67.0%			35.0%	65.0%

Accurate Counts
978-664-2565

Location : Route 101A West of
Location : Cottage Street
City/State: Milford, NH
Counter : 13647

517840A1
Site Code: 51784001

Start	22-May-0	EB		Hour Totals		WB		Hour Totals		Combined Totals	
Time	Mon	Morning	Afternoon	Morning	Afternoon	Morning	Afternoon	Morning	Afternoon	Morning	Afternoon
12:00		6	111			13	99				
12:15		5	107			10	133				
12:30		4	101			8	110				
12:45		7	124	22	443	4	99	35	441	57	884
01:00		7	121			3	106				
01:15		3	127			4	99				
01:30		11	114			9	113				
01:45		7	102	28	464	10	128	26	446	54	910
02:00		2	108			3	99				
02:15		5	131			1	115				
02:30		2	118			1	96				
02:45		5	106	14	463	2	131	7	441	21	904
03:00		3	111			2	122				
03:15		9	133			5	111				
03:30		2	132			3	101				
03:45		3	113	17	489	7	151	17	485	34	974
04:00		15	130			4	125				
04:15		8	100			5	137				
04:30		16	118			4	136				
04:45		18	108	57	456	11	142	24	540	81	996
05:00		23	134			15	132				
05:15		29	128			22	127				
05:30		36	138			41	133				
05:45		58	120	146	520	41	118	119	510	265	1030
06:00		74	115			35	144				
06:15		76	98			46	124				
06:30		88	98			75	116				
06:45		79	87	317	398	94	109	250	493	567	891
07:00		113	80			87	109				
07:15		132	63			96	103				
07:30		150	85			92	86				
07:45		102	77	497	305	94	86	369	384	866	689
08:00		129	66			75	73				
08:15		114	86			89	79				
08:30		113	54			94	69				
08:45		124	60	480	266	93	55	351	276	831	542
09:00		92	50			88	53				
09:15		102	51			96	59				
09:30		107	31			80	47				
09:45		94	27	395	159	81	40	345	199	740	358
10:00		87	35			78	41				
10:15		88	22			93	38				
10:30		98	17			105	15				
10:45		106	27	379	101	92	30	368	124	747	225
11:00		104	27			106	23				
11:15		100	18			110	23				
11:30		128	14			99	18				
11:45		85	9	417	68	102	12	417	76	834	144
Total		2769	4132			2328	4415			5097	8547
Percent		40.1%	59.9%			34.5%	65.5%			37.4%	62.6%

Accurate Counts
978-664-2565

Location : Route 101A West of
Location : Cottage Street
City/State: Milford, NH
Counter : 13647

517840A1
Site Code: 51784001

Start	23-May-0	EB		Hour Totals		WB		Hour Totals		Combined Totals	
Time	Tue	Morning	Afternoon	Morning	Afternoon	Morning	Afternoon	Morning	Afternoon	Morning	Afternoon
12:00		11	123			8	110				
12:15		3	142			9	117				
12:30		8	131			8	93				
12:45		11	120	33	516	10	109	35	429	68	945
01:00		5	106			8	117				
01:15		1	106			5	100				
01:30		3	115			1	96				
01:45		5	96	14	423	6	104	20	417	34	840
02:00		6	104			2	118				
02:15		5	145			3	116				
02:30		3	111			3	93				
02:45		3	113	17	473	2	132	10	459	27	932
03:00		0	124			1	124				
03:15		4	135			3	112				
03:30		5	130			3	107				
03:45		8	70	17	459	7	142	14	485	31	944
04:00		10	81			3	127				
04:15		9	128			6	124				
04:30		12	134			9	127				
04:45		21	136	52	479	6	96	24	474	76	953
05:00		22	127			15	131				
05:15		40	134			22	113				
05:30		45	151			45	128				
05:45		47	138	154	550	48	128	130	500	284	1050
06:00		63	103			33	137				
06:15		90	124			48	123				
06:30		92	86			68	140				
06:45		88	88	333	401	87	126	236	526	569	927
07:00		112	93			86	97				
07:15		111	87			107	130				
07:30		138	83			87	114				
07:45		118	89	479	352	88	79	368	420	847	772
08:00		140	74			69	85				
08:15		95	74			94	74				
08:30		100	63			104	70				
08:45		90	54	425	265	90	72	357	301	782	566
09:00		93	51			98	56				
09:15		93	57			88	52				
09:30		103	45			77	54				
09:45		82	30	371	183	100	46	363	208	734	391
10:00		87	42			90	32				
10:15		117	31			85	39				
10:30		87	22			96	32				
10:45		107	20	398	115	111	26	382	129	780	244
11:00		106	24			111	22				
11:15		91	24			93	17				
11:30		107	13			103	24				
11:45		132	13	436	74	107	19	414	82	850	156
Total		2729	4290			2353	4430			5082	8720
Percent		38.9%	61.1%			34.7%	65.3%			36.8%	63.2%

Accurate Counts
978-664-2565

Location : Route 101A West of
Location : Cottage Street
City/State: Milford, NH
Counter : 13647

517840A1
Site Code: 51784001

Start Time	24-May-0 Wed	EB Morning	EB Afternoon	Hour Totals Morning	Hour Totals Afternoon	WB Morning	WB Afternoon	Hour Totals Morning	Hour Totals Afternoon	Combined Totals Morning	Combined Totals Afternoon
12:00		14	139			10	103				
12:15		9	111			10	102				
12:30		7	103			10	109				
12:45		4	109	34	462	10	99	40	413	74	875
01:00		3	119			6	119				
01:15		4	103			6	103				
01:30		4	90			6	107				
01:45		6	75	17	387	8	119	26	448	43	835
02:00		10	111			2	105				
02:15		1	128			1	113				
02:30		8	117			1	124				
02:45		0	98	19	454	3	138	7	480	26	934
03:00		4	124			4	136				
03:15		4	117			2	132				
03:30		9	151			5	102				
03:45		6	121	23	513	5	120	16	490	39	1003
04:00		10	131			2	125				
04:15		7	131			13	132				
04:30		13	131			9	134				
04:45		19	117	49	510	5	142	29	533	78	1043
05:00		17	122			10	148				
05:15		25	118			26	141				
05:30		44	139			37	148				
05:45		52	116	138	495	37	146	110	583	248	1078
06:00		63	110			44	150				
06:15		72	101			54	138				
06:30		101	114			70	125				
06:45		105	117	341	442	88	107	256	520	597	962
07:00		114	98			83	118				
07:15		135	103			116	107				
07:30		146	108			86	103				
07:45		111	92	506	401	90	91	375	419	881	820
08:00		124	104			91	72				
08:15		115	67			85	113				
08:30		100	81			82	67				
08:45		102	74	441	326	91	72	349	324	790	650
09:00		128	55			72	54				
09:15		107	45			83	70				
09:30		105	46			79	64				
09:45		112	37	452	183	81	40	315	228	767	411
10:00		107	32			97	33				
10:15		86	30			88	33				
10:30		104	23			74	35				
10:45		89	28	386	113	80	34	339	135	725	248
11:00		108	39			95	26				
11:15		110	16			106	24				
11:30		117	13			114	19				
11:45		124	11	459	79	103	18	418	87	877	166
Total		2865	4365			2280	4660			5145	9025
Percent		39.6%	60.4%			32.9%	67.1%			36.3%	63.7%

Accurate Counts
978-664-2565

Location : Route 101A West of
Location : Cottage Street
City/State: Milford, NH
Counter : 13647

517840A1
Site Code: 51784001

Start Time	25-May-0 Thu	EB Morning	EB Afternoon	Hour Totals Morning	Hour Totals Afternoon	WB Morning	WB Afternoon	Hour Totals Morning	Hour Totals Afternoon	Combined Totals Morning	Combined Totals Afternoon
12:00		9	130			12	126				
12:15		14	136			14	111				
12:30		5	116			10	103				
12:45		5	144	33	526	12	101	48	441	81	967
01:00		5	119			5	106				
01:15		5	137			10	115				
01:30		2	112			8	101				
01:45		4	122	16	490	5	107	28	429	44	919
02:00		9	104			2	116				
02:15		6	155			3	101				
02:30		2	133			7	87				
02:45		7	106	24	498	7	134	19	438	43	936
03:00		5	142			0	96				
03:15		8	141			5	131				
03:30		7	131			8	127				
03:45		7	137	27	551	7	127	20	481	47	1032
04:00		8	131			4	131				
04:15		4	122			9	132				
04:30		8	133			10	90				
04:45		16	120	36	506	10	150	33	503	69	1009
05:00		23	137			11	117				
05:15		28	142			21	87				
05:30		39	133			45	120				
05:45		55	124	145	536	46	147	123	471	268	1007
06:00		63	114			38	156				
06:15		88	124			54	132				
06:30		99	105			62	134				
06:45		96	110	346	453	89	111	243	533	589	986
07:00		116	101			82	122				
07:15		160	113			100	121				
07:30		129	88			93	117				
07:45		112	98	517	400	108	95	383	455	900	855
08:00		114	118			96	101				
08:15		128	97			89	90				
08:30		90	80			98	107				
08:45		89	80	421	375	93	88	376	386	797	761
09:00		107	111			84	71				
09:15		111	68			86	78				
09:30		86	62			97	57				
09:45		115	39	419	280	101	55	368	261	787	541
10:00		101	41			90	56				
10:15		93	35			101	46				
10:30		89	41			87	38				
10:45		107	23	390	140	101	39	379	179	769	319
11:00		96	24			99	29				
11:15		116	22			105	27				
11:30		136	14			100	19				
11:45		120	16	468	76	108	12	412	87	880	163
Total		2842	4831			2432	4664			5274	9495
Percent		37.0%	63.0%			34.3%	65.7%			35.7%	64.3%

Accurate Counts
978-664-2565

Location : Route 101A West of
Location : Cottage Street
City/State: Milford, NH
Counter : 13647

517840A1
Site Code: 51784001

Start Time	26-May-0 Fri	EB Morning	EB Afternoon	Hour Totals Morning	Hour Totals Afternoon	WB Morning	WB Afternoon	Hour Totals Morning	Hour Totals Afternoon	Combined Totals Morning	Combined Totals Afternoon
12:00		14	137			21	102				
12:15		10	101			23	111				
12:30		5	130			9	106				
12:45		8	112	37	480	17	120	70	439	107	919
01:00		5	126			8	99				
01:15		6	118			13	109				
01:30		4	119			6	119				
01:45		8	114	23	477	6	138	33	465	56	942
02:00		6	119			3	107				
02:15		7	148			3	99				
02:30		7	140			7	117				
02:45		3	106	23	513	4	128	17	451	40	964
03:00		4	118			1	101				
03:15		9	121			3	133				
03:30		8	130			6	117				
03:45		7	121	28	490	8	126	18	477	46	967
04:00		5	135			7	136				
04:15		7	132			3	132				
04:30		14	127			12	137				
04:45		12	129	38	523	5	144	27	549	65	1072
05:00		15	153			13	136				
05:15		26	135			21	134				
05:30		38	142			31	117				
05:45		42	118	121	548	33	114	98	501	219	1049
06:00		60	109			36	127				
06:15		81	105			48	119				
06:30		79	108			79	126				
06:45		119	94	339	416	75	118	238	490	577	906
07:00		104	106			92	100				
07:15		143	97			97	100				
07:30		128	79			90	99				
07:45		96	97	471	379	94	75	373	374	844	753
08:00		136	65			109	80				
08:15		120	56			93	89				
08:30		125	70			90	76				
08:45		140	53	521	244	79	64	371	309	892	553
09:00		117	71			95	54				
09:15		89	50			107	62				
09:30		117	53			117	64				
09:45		133	54	456	228	99	56	418	236	874	464
10:00		124	51			89	34				
10:15		118	38			116	53				
10:30		109	38			118	49				
10:45		109	17	460	144	109	35	432	171	892	315
11:00		149	40			104	42				
11:15		119	36			107	38				
11:30		130	22			107	44				
11:45		131	18	529	116	89	34	407	158	936	274
Total		3046	4558			2502	4620			5548	9178
Percent		40.1%	59.9%			35.1%	64.9%			37.7%	62.3%

Accurate Counts
978-664-2565

Location : Route 101A West of
Location : Cottage Street
City/State: Milford, NH
Counter : 13647

517840A1
Site Code: 51784001

Start Time	27-May-0 Sat	EB Morning	EB Afternoon	Hour Totals Morning	Hour Totals Afternoon	WB Morning	WB Afternoon	Hour Totals Morning	Hour Totals Afternoon	Combined Totals Morning	Combined Totals Afternoon
12:00		19	118			21	134				
12:15		14	125			25	114				
12:30		14	116			8	105				
12:45		11	133	58	492	13	119	67	472	125	964
01:00		10	117			16	139				
01:15		28	115			20	122				
01:30		7	129			10	113				
01:45		9	118	54	479	10	104	56	478	110	957
02:00		4	115			4	117				
02:15		7	104			6	123				
02:30		2	88			3	120				
02:45		8	130	21	437	7	91	20	451	41	888
03:00		6	121			3	115				
03:15		8	115			11	124				
03:30		5	122			6	106				
03:45		3	125	22	483	6	122	26	467	48	950
04:00		6	109			5	115				
04:15		4	113			4	102				
04:30		8	98			8	130				
04:45		10	133	28	453	5	112	22	459	50	912
05:00		9	104			9	99				
05:15		8	113			13	98				
05:30		18	86			19	113				
05:45		20	112	55	415	12	111	53	421	108	836
06:00		21	92			19	84				
06:15		30	90			23	112				
06:30		42	83			39	104				
06:45		58	93	151	358	46	87	127	387	278	745
07:00		60	69			36	97				
07:15		64	73			57	101				
07:30		66	63			44	103				
07:45		65	65	255	270	62	97	199	398	454	668
08:00		71	83			72	106				
08:15		81	98			92	83				
08:30		103	75			92	76				
08:45		101	59	356	315	106	87	362	352	718	667
09:00		117	62			103	57				
09:15		112	53			98	63				
09:30		118	40			91	75				
09:45		110	50	457	205	105	58	397	253	854	458
10:00		134	53			104	54				
10:15		130	61			92	54				
10:30		133	56			110	36				
10:45		121	34	518	204	94	44	400	188	918	392
11:00		124	27			103	36				
11:15		125	24			101	37				
11:30		146	39			113	30				
11:45		119	26	514	116	116	22	433	125	947	241
Total		2489	4227			2162	4451			4651	8678
Percent		37.1%	62.9%			32.7%	67.3%			34.9%	65.1%

Accurate Counts
978-664-2565

Location : Route 101A West of
Location : Cottage Street
City/State: Milford, NH
Counter : 13647

517840A1
Site Code: 51784001

Start Time	28-May-0 Sun	EB Morning	EB Afternoon	Hour Totals Morning	Hour Totals Afternoon	WB Morning	WB Afternoon	Hour Totals Morning	Hour Totals Afternoon	Combined Totals Morning	Combined Totals Afternoon
12:00		16	110			21	111				
12:15		17	111			25	101				
12:30		9	90			14	125				
12:45		34	118	76	429	14	104	74	441	150	870
01:00		29	135			13	103				
01:15		10	91			9	114				
01:30		48	113			9	90				
01:45		5	83	92	422	7	92	38	399	130	821
02:00		1	96			6	98				
02:15		2	79			2	98				
02:30		7	103			5	98				
02:45		5	105	15	383	5	99	18	393	33	776
03:00		9	101			6	91				
03:15		4	116			2	102				
03:30		5	113			2	85				
03:45		2	110	20	440	5	92	15	370	35	810
04:00		1	109			2	84				
04:15		4	81			6	89				
04:30		6	94			3	70				
04:45		11	68	22	352	2	81	13	324	35	676
05:00		5	94			4	81				
05:15		12	87			7	76				
05:30		13	93			8	83				
05:45		21	63	51	337	14	100	33	340	84	677
06:00		12	88			11	69				
06:15		21	86			23	84				
06:30		34	70			25	77				
06:45		35	68	102	312	23	98	82	328	184	640
07:00		37	78			40	125				
07:15		38	71			26	105				
07:30		38	73			61	101				
07:45		57	71	170	293	36	93	163	424	333	717
08:00		68	69			51	91				
08:15		62	67			52	80				
08:30		63	60			59	62				
08:45		78	49	271	245	60	59	222	292	493	537
09:00		86	44			85	66				
09:15		60	51			77	49				
09:30		84	39			100	38				
09:45		103	43	333	177	97	43	359	196	692	373
10:00		99	33			72	36				
10:15		100	51			97	44				
10:30		98	34			90	30				
10:45		95	28	392	146	94	32	353	142	745	288
11:00		84	27			89	43				
11:15		103	16			111	33				
11:30		126	42			114	41				
11:45		115	25	428	110	99	24	413	141	841	251
Total		1972	3646			1783	3790			3755	7436
Percent		35.1%	64.9%			32.0%	68.0%			33.6%	66.4%

Accurate Counts
978-664-2565

Location : Route 101A West of
Location : Cottage Street
City/State: Milford, NH
Counter : 13647

517840A1
Site Code: 51784001

Start Time	29-May-0 Mon	EB Morning	EB Afternoon	Hour Totals Morning	Hour Totals Afternoon	WB Morning	WB Afternoon	Hour Totals Morning	Hour Totals Afternoon	Combined Totals Morning	Combined Totals Afternoon
12:00		20	87			26	83				
12:15		8	89			19	80				
12:30		16	93			10	107				
12:45		41	108	85	377	19	100	74	370	159	747
01:00		47	97			13	98				
01:15		8	92			8	87				
01:30		47	101			7	77				
01:45		24	98	126	388	7	86	35	348	161	736
02:00		3	94			10	92				
02:15		6	99			3	100				
02:30		2	97			3	100				
02:45		5	90	16	380	7	111	23	403	39	783
03:00		7	81			6	96				
03:15		11	99			7	106				
03:30		7	101			7	96				
03:45		5	95	30	376	6	85	26	383	56	759
04:00		8	101			7	94				
04:15		5	94			10	102				
04:30		9	95			10	73				
04:45		11	90	33	380	7	66	34	335	67	715
05:00		9	89			6	96				
05:15		9	85			8	89				
05:30		17	88			10	82				
05:45		14	91	49	353	9	87	33	354	82	707
06:00		19	88			12	79				
06:15		20	90			15	88				
06:30		20	80			23	77				
06:45		32	72	91	330	27	75	77	319	168	649
07:00		23	86			28	112				
07:15		35	82			23	79				
07:30		40	68			35	83				
07:45		51	78	149	314	39	82	125	356	274	670
08:00		58	70			50	82				
08:15		44	75			43	79				
08:30		50	72			44	64				
08:45		57	51	209	268	53	63	190	288	399	556
09:00		61	51			65	53				
09:15		75	46			63	47				
09:30		61	33			63	34				
09:45		68	35	265	165	73	38	264	172	529	337
10:00		64	28			62	46				
10:15		58	28			34	35				
10:30		7	18			6	29				
10:45		4	18	133	92	13	29	115	139	248	231
11:00		2	22			9	24				
11:15		5	20			15	14				
11:30		52	4			63	9				
11:45		76	7	135	53	75	9	162	56	297	109
Total		1321	3476			1158	3523			2479	6999
Percent		27.5%	72.5%			24.7%	75.3%			26.2%	73.8%

Accurate Counts
978-664-2565

Location : Route 101A West of
Location : Cottage Street
City/State: Milford, NH
Counter : 13647

517840A1
Site Code: 51784001

Start Time	30-May-0 Tue	EB Morning	EB Afternoon	Hour Totals Morning	Hour Totals Afternoon	WB Morning	WB Afternoon	Hour Totals Morning	Hour Totals Afternoon	Combined Totals Morning	Combined Totals Afternoon
12:00		5	137			11	111				
12:15		2	134			11	114				
12:30		6	114			4	111				
12:45		4	93	17	478	9	118	35	454	52	932
01:00		1	117			5	132				
01:15		4	133			5	112				
01:30		5	120			3	113				
01:45		2	123	12	493	6	124	19	481	31	974
02:00		7	100			5	117				
02:15		3	140			3	117				
02:30		2	139			1	106				
02:45		6	119	18	498	2	116	11	456	29	954
03:00		4	143			3	125				
03:15		6	157			2	110				
03:30		5	127			0	120				
03:45		6	134	21	561	2	141	7	496	28	1057
04:00		6	133			2	127				
04:15		3	139			5	146				
04:30		11	159			9	138				
04:45		16	113	36	544	11	148	27	559	63	1103
05:00		19	156			14	153				
05:15		30	131			16	166				
05:30		36	145			44	164				
05:45		53	140	138	572	31	141	105	624	243	1196
06:00		87	104			50	158				
06:15		81	104			51	124				
06:30		85	106			69	120				
06:45		106	99	359	413	96	114	266	516	625	929
07:00		121	99			78	100				
07:15		125	79			110	123				
07:30		129	86			95	106				
07:45		119	85	494	349	102	97	385	426	879	775
08:00		125	96			83	89				
08:15		153	83			97	76				
08:30		108	69			101	81				
08:45		124	68	510	316	95	66	376	312	886	628
09:00		115	51			100	48				
09:15		124	40			99	73				
09:30		91	29			90	49				
09:45		109	30	439	150	109	32	398	202	837	352
10:00		85	31			85	31				
10:15		120	10			91	49				
10:30		90	14			88	38				
10:45		87	15	382	70	103	21	367	139	749	209
11:00		92	28			111	20				
11:15		104	17			111	18				
11:30		97	13			117	19				
11:45		137	10	430	68	93	11	432	68	862	136
Total		2856	4512			2428	4733			5284	9245
Percent		38.8%	61.2%			33.9%	66.1%			36.4%	63.6%

Accurate Counts
978-664-2565

Location : Route 101A West of
Location : Cottage Street
City/State: Milford, NH
Counter : 13647

517840A1
Site Code: 51784001

Start Time	31-May-0 Wed	EB Morning	EB Afternoon	Hour Totals Morning	Hour Totals Afternoon	WB Morning	WB Afternoon	Hour Totals Morning	Hour Totals Afternoon	Combined Totals Morning	Combined Totals Afternoon
12:00		11	132			13	137				
12:15		5	140			9	102				
12:30		9	122			9	116				
12:45		3	130	28	524	10	122	41	477	69	1001
01:00		5	135			5	124				
01:15		3	115			5	129				
01:30		4	118			9	121				
01:45		7	114	19	482	3	122	22	496	41	978
02:00		9	133			2	124				
02:15		2	144			1	112				
02:30		3	130			3	78				
02:45		4	147	18	554	6	105	12	419	30	973
03:00		4	113			6	109				
03:15		5	117			1	86				
03:30		4	135			5	139				
03:45		11	138	24	503	4	141	16	475	40	978
04:00		13	156			4	139				
04:15		4	154			5	126				
04:30		13	142			6	150				
04:45		15	128	45	580	6	156	21	571	66	1151
05:00		25	130			14	137				
05:15		24	145			24	134				
05:30		47	167			39	133				
05:45		47	127	143	569	45	139	122	543	265	1112
06:00		74	112			37	160				
06:15		74	103			60	131				
06:30		99	106			66	118				
06:45		103	120	350	441	93	131	256	540	606	981
07:00		122	117			100	126				
07:15		127	100			113	106				
07:30		123	112			69	103				
07:45		123	103	495	432	109	107	391	442	886	874
08:00		126	86			106	103				
08:15		126	71			94	96				
08:30		120	86			117	91				
08:45		112	80	484	323	92	77	409	367	893	690
09:00		128	103			96	79				
09:15		137	66			98	75				
09:30		93	45			108	63				
09:45		126	51	484	265	98	47	400	264	884	529
10:00		103	43			83	45				
10:15		121	26			98	39				
10:30		108	22			106	41				
10:45		110	26	442	117	101	30	388	155	830	272
11:00		104	30			96	33				
11:15		106	21			120	23				
11:30		147	13			123	21				
11:45		122	7	479	71	107	20	446	97	925	168
Total		3011	4861			2524	4846			5535	9707
Percent		38.2%	61.8%			34.2%	65.8%			36.3%	63.7%

Accurate Counts
978-664-2565

Location : Route 101A West of
Location : Cottage Street
City/State: Milford, NH
Counter : 13647

517840A1
Site Code: 51784001

Start Time	01-Jun-06 Thu	EB Morning	EB Afternoon	Hour Totals Morning	Hour Totals Afternoon	WB Morning	WB Afternoon	Hour Totals Morning	Hour Totals Afternoon	Combined Totals Morning	Combined Totals Afternoon
12:00		18	132			15	116				
12:15		7	105			19	140				
12:30		5	135			9	121				
12:45		6	128	36	500	10	135	53	512	89	1012
01:00		5	140			8	134				
01:15		4	108			7	113				
01:30		8	117			12	114				
01:45		4	108	21	473	7	146	34	507	55	980
02:00		12	127			12	106				
02:15		3	145			4	125				
02:30		9	136			3	108				
02:45		2	136	26	544	3	115	22	454	48	998
03:00		4	142			2	120				
03:15		7	139			3	133				
03:30		9	164			7	90				
03:45		1	150	21	595	3	140	15	483	36	1078
04:00		8	138			3	119				
04:15		9	121			8	137				
04:30		6	132			6	149				
04:45		15	128	38	519	12	141	29	546	67	1065
05:00		18	149			10	139				
05:15		31	136			31	142				
05:30		39	150			44	157				
05:45		58	116	146	551	50	150	135	588	281	1139
06:00		82	123			43	151				
06:15		77	119			54	168				
06:30		88	124			68	171				
06:45		115	124	362	490	103	173	268	663	630	1153
07:00		130	101			81	142				
07:15		180	100			104	124				
07:30		136	96			87	99				
07:45		114	116	560	413	109	84	381	449	941	862
08:00		160	35			102	102				
08:15		131	48			94	113				
08:30		131	43			117	150				
08:45		121	82	543	208	113	85	426	450	969	658
09:00		112	57			117	57				
09:15		124	45			103	63				
09:30		105	37			113	64				
09:45		112	54	453	193	94	29	427	213	880	406
10:00		105	38			92	30				
10:15		91	40			94	39				
10:30		132	41			101	32				
10:45		128	26	456	145	98	24	385	125	841	270
11:00		118	16			109	50				
11:15		120	21			106	28				
11:30		143	18			110	22				
11:45		134	13	515	68	132	15	457	115	972	183
Total		3177	4699			2632	5105			5809	9804
Percent		40.3%	59.7%			34.0%	66.0%			37.2%	62.8%

Accurate Counts
978-664-2565

Location : Route 101A West of
Location : Cottage Street
City/State: Milford, NH
Counter : 13647

517840A1
Site Code: 51784001

Start Time	02-Jun-06 Fri	EB Morning	EB Afternoon	Hour Totals Morning	Hour Totals Afternoon	WB Morning	WB Afternoon	Hour Totals Morning	Hour Totals Afternoon	Combined Totals Morning	Combined Totals Afternoon
12:00		17	139			13	128				
12:15		8	132			14	133				
12:30		5	122			8	139				
12:45		10	137	40	530	6	117	41	517	81	1047
01:00		9	129			11	136				
01:15		9	122			6	124				
01:30		8	116			2	119				
01:45		1	127	27	494	4	123	23	502	50	996
02:00		10	120			5	130				
02:15		5	124			0	124				
02:30		2	133			3	107				
02:45		3	124	20	501	3	157	11	518	31	1019
03:00		1	133			7	147				
03:15		1	141			8	91				
03:30		4	155			12	117				
03:45		3	128	9	557	4	137	31	492	40	1049
04:00		3	146			6	151				
04:15		2	118			5	139				
04:30		6	146			13	160				
04:45		8	139	19	549	22	142	46	592	65	1141
05:00		13	153			18	141				
05:15		20	141			31	141				
05:30		34	134			25	141				
05:45		55	136	122	564	32	113	106	536	228	1100
06:00		39	120			49	151				
06:15		59	111			47	111				
06:30		85	114			94	113				
06:45		105	104	288	449	93	126	283	501	571	950
07:00		129	117			98	100				
07:15		140	112			109	103				
07:30		141	105			91	90				
07:45		123	81	533	415	106	92	404	385	937	800
08:00		148	96			116	76				
08:15		143	97			80	79				
08:30		131	75			114	61				
08:45		120	92	542	360	102	65	412	281	954	641
09:00		112	85			103	39				
09:15		102	73			123	57				
09:30		29	69			183	33				
09:45		57	61	300	288	136	33	545	162	845	450
10:00		88	68			106	39				
10:15		90	63			96	21				
10:30		114	74			96	17				
10:45		138	64	430	269	100	18	398	95	828	364
11:00		137	74			91	23				
11:15		121	66			131	12				
11:30		117	40			131	21				
11:45		121	39	496	219	141	11	494	67	990	286
Total		2826	5195			2794	4648			5620	9843
Percent		35.2%	64.8%			37.5%	62.5%			36.3%	63.7%

Accurate Counts
978-664-2565

Location : Route 101A West of
Location : Cottage Street
City/State: Milford, NH
Counter : 13647

517840A1
Site Code: 51784001

Start Time	03-Jun-06 Sat	EB Morning	EB Afternoon	Hour Totals Morning	Hour Totals Afternoon	WB Morning	WB Afternoon	Hour Totals Morning	Hour Totals Afternoon	Combined Totals Morning	Combined Totals Afternoon
12:00		37	147			5	131				
12:15		33	141			1	103				
12:30		41	124			3	137				
12:45		30	109	141	521	2	130	11	501	152	1022
01:00		24	101			0	109				
01:15		30	98			0	141				
01:30		26	111			0	135				
01:45		23	93	103	403	0	122	0	507	103	910
02:00		13	111			0	104				
02:15		20	124			0	111				
02:30		7	101			0	110				
02:45		10	121	50	457	0	119	0	444	50	901
03:00		8	102			0	146				
03:15		13	35			1	184				
03:30		15	43			0	166				
03:45		4	63	40	243	0	163	1	659	41	902
04:00		14	52			0	163				
04:15		10	40			2	155				
04:30		13	35			3	158				
04:45		13	66	50	193	3	164	8	640	58	833
05:00		17	62			2	127				
05:15		18	73			6	115				
05:30		28	48			8	133				
05:45		14	66	77	249	15	138	31	513	108	762
06:00		19	57			17	121				
06:15		20	64			42	130				
06:30		33	68			40	113				
06:45		38	70	110	259	37	113	136	477	246	736
07:00		46	60			43	101				
07:15		45	57			28	112				
07:30		58	58			42	88				
07:45		71	50	220	225	55	98	168	399	388	624
08:00		79	55			69	73				
08:15		65	58			73	65				
08:30		82	62			76	60				
08:45		81	76	307	251	98	34	316	232	623	483
09:00		71	80			99	32				
09:15		107	66			84	35				
09:30		101	69			104	33				
09:45		124	57	403	272	95	41	382	141	785	413
10:00		115	62			97	26				
10:15		97	51			122	29				
10:30		125	52			124	25				
10:45		124	37	461	202	104	33	447	113	908	315
11:00		127	43			96	24				
11:15		132	43			114	8				
11:30		123	42			100	9				
11:45		143	19	525	147	123	13	433	54	958	201
Total		2487	3422			1933	4680			4420	8102
Percent		42.1%	57.9%			29.2%	70.8%			35.3%	64.7%

Accurate Counts
978-664-2565

Location : Route 101A West of
Location : Cottage Street
City/State: Milford, NH
Counter : 13647

517840A1
Site Code: 51784001

Start	04-Jun-06	EB		Hour Totals		WB		Hour Totals		Combined Totals	
Time	Sun	Morning	Afternoon	Morning	Afternoon	Morning	Afternoon	Morning	Afternoon	Morning	Afternoon
12:00		38	127			3	1				
12:15		25	140			5	0				
12:30		38	146			13	0				
12:45		35	127	136	540	0	2	21	3	157	543
01:00		26	141			0	1				
01:15		25	143			2	1				
01:30		13	150			1	1				
01:45		11	131	75	565	0	1	3	4	78	569
02:00		10	125			0	1				
02:15		8	131			0	0				
02:30		10	118			1	2				
02:45		10	141	38	515	0	2	1	5	39	520
03:00		16	135			0	2				
03:15		6	128			0	2				
03:30		7	125			0	0				
03:45		7	135	36	523	0	3	0	7	36	530
04:00		8	123			0	2				
04:15		9	126			0	0				
04:30		5	132			0	4				
04:45		9	118	31	499	0	2	0	8	31	507
05:00		12	120			0	1				
05:15		12	119			0	4				
05:30		21	122			0	0				
05:45		30	116	75	477	0	0	0	5	75	482
06:00		29	116			0	2				
06:15		29	98			0	2				
06:30		60	100			0	1				
06:45		48	121	166	435	1	1	1	6	167	441
07:00		44	112			0	2				
07:15		56	113			0	1				
07:30		63	119			0	0				
07:45		74	106	237	450	0	0	0	3	237	453
08:00		75	94			2	0				
08:15		89	104			0	0				
08:30		84	96			0	0				
08:45		85	82	333	376	0	0	2	0	335	376
09:00		104	78			0	0				
09:15		99	66			0	0				
09:30		112	51			0	0				
09:45		114	49	429	244	0	0	0	0	429	244
10:00		122	38			0	0				
10:15		122	47			0	0				
10:30		120	40			0	0				
10:45		132	35	496	160	0	0	0	0	496	160
11:00		128	34			1	0				
11:15		127	37			0	0				
11:30		144	21			2	0				
11:45		133	12	532	104	0	0	3	0	535	104
Total		2584	4888			31	41			2615	4929
Percent		34.6%	65.4%			43.1%	56.9%			34.7%	65.3%

Accurate Counts
978-664-2565

Location : Route 101A West of
Location : Cottage Street
City/State: Milford, NH
Counter : 13647

517840A1
Site Code: 51784001

Start Time	05-Jun-06 Mon	EB Morning	EB Afternoon	Hour Totals Morning	Hour Totals Afternoon	WB Morning	WB Afternoon	Hour Totals Morning	Hour Totals Afternoon	Combined Totals Morning	Combined Totals Afternoon
12:00		25	*			0	*				
12:15		16	*			0	*				
12:30		15	*			0	*				
12:45		19	*	75	0	0	*	0	0	75	0
01:00		14	*			0	*				
01:15		10	*			0	*				
01:30		8	*			0	*				
01:45		9	*	41	0	0	*	0	0	41	0
02:00		8	*			0	*				
02:15		6	*			0	*				
02:30		6	*			0	*				
02:45		4	*	24	0	0	*	0	0	24	0
03:00		6	*			0	*				
03:15		7	*			0	*				
03:30		10	*			0	*				
03:45		9	*	32	0	0	*	0	0	32	0
04:00		8	*			0	*				
04:15		13	*			0	*				
04:30		21	*			0	*				
04:45		23	*	65	0	0	*	0	0	65	0
05:00		31	*			0	*				
05:15		27	*			1	*				
05:30		0	*			0	*				
05:45		0	*	58	0	0	*	1	0	59	0
06:00		0	*			0	*				
06:15		0	*			0	*				
06:30		0	*			0	*				
06:45		0	*	0	0	0	*	0	0	0	0
07:00		*	*	*	*	*	*	*	*	*	*
07:15		*	*	*	*	*	*	*	*	*	*
07:30		*	*	*	*	*	*	*	*	*	*
07:45		*	*	*	*	*	*	*	*	*	*
08:00		*	*	*	*	*	*	*	*	*	*
08:15		*	*	*	*	*	*	*	*	*	*
08:30		*	*	*	*	*	*	*	*	*	*
08:45		*	*	*	*	*	*	*	*	*	*
09:00		*	*	*	*	*	*	*	*	*	*
09:15		*	*	*	*	*	*	*	*	*	*
09:30		*	*	*	*	*	*	*	*	*	*
09:45		*	*	*	*	*	*	*	*	*	*
10:00		*	*	*	*	*	*	*	*	*	*
10:15		*	*	*	*	*	*	*	*	*	*
10:30		*	*	*	*	*	*	*	*	*	*
10:45		*	*	*	*	*	*	*	*	*	*
11:00		*	*	*	*	*	*	*	*	*	*
11:15		*	*	*	*	*	*	*	*	*	*
11:30		*	*	*	*	*	*	*	*	*	*
11:45		*	*	*	*	*	*	*	*	*	*
Total		295	0			1	0			296	0
Percent		100.0%	0.0%			100.0%	0.0%			100.0%	0.0%
Grand Total		45358	77600			36342	76122			81700	153722
Percent		36.9%	63.1%			32.3%	67.7%			34.7%	65.3%

ADT Not Calculated

Accurate Counts
978-664-2565

Location : Route 101A West of
Location : Cottage Road
City/State: Milford, NH
Counter : 232

51784AV1
Site Code: 51784001

Start Time	05-Jun-06 Mon	EB Morning	EB Afternoon	Hour Totals Morning	Hour Totals Afternoon	WB Morning	WB Afternoon	Hour Totals Morning	Hour Totals Afternoon	Combined Totals Morning	Combined Totals Afternoon
12:00		*	127			*	140				
12:15		*	131			*	147				
12:30		*	127			*	147				
12:45		*	132	0	517	*	142	0	576	0	1093
01:00		*	126			*	127				
01:15		*	108			*	134				
01:30		*	127			*	132				
01:45		*	110	0	471	*	138	0	531	0	1002
02:00		*	121			*	157				
02:15		*	156			*	112				
02:30		*	122			*	153				
02:45		*	128	0	527	*	161	0	583	0	1110
03:00		*	144			*	167				
03:15		*	147			*	163				
03:30		*	177			*	114				
03:45		*	116	0	584	*	168	0	612	0	1196
04:00		*	159			*	171				
04:15		*	151			*	174				
04:30		*	136			*	174				
04:45		*	125	0	571	*	214	0	733	0	1304
05:00		*	154			*	181				
05:15		*	184			*	176				
05:30		*	171			*	162				
05:45		*	132	0	641	*	153	0	672	0	1313
06:00		54	142			38	170				
06:15		102	105			56	164				
06:30		95	120			95	120				
06:45		107	99	358	466	113	116	302	570	660	1036
07:00		122	91			109	92				
07:15		154	79			131	109				
07:30		145	71			111	92				
07:45		127	71	548	312	118	98	469	391	1017	703
08:00		146	102			118	115				
08:15		133	80			118	102				
08:30		110	76			110	64				
08:45		129	51	518	309	92	74	438	355	956	664
09:00		115	58			95	54				
09:15		124	43			105	56				
09:30		84	40			94	51				
09:45		101	34	424	175	113	50	407	211	831	386
10:00		118	32			96	36				
10:15		100	37			123	45				
10:30		122	25			105	37				
10:45		118	17	458	111	109	30	433	148	891	259
11:00		102	29			110	22				
11:15		112	17			153	23				
11:30		147	9			120	18				
11:45		93	10	454	65	102	14	485	77	939	142
Total		2760	4749			2534	5459			5294	10208
Percent		36.8%	63.2%			31.7%	68.3%			34.2%	65.8%

Accurate Counts
978-664-2565

Location : Route 101A West of
Location : Cottage Road
City/State: Milford, NH
Counter : 232

51784AV1
Site Code: 51784001

Start	06-Jun-06	EB		Hour Totals		WB		Hour Totals		Combined Totals	
Time	Tue	Morning	Afternoon	Morning	Afternoon	Morning	Afternoon	Morning	Afternoon	Morning	Afternoon
12:00		9	120			10	139				
12:15		7	129			15	125				
12:30		10	138			10	128				
12:45		12	126	38	513	9	132	44	524	82	1037
01:00		7	128			7	131				
01:15		5	127			5	121				
01:30		4	116			8	126				
01:45		2	121	18	492	5	130	25	508	43	1000
02:00		13	128			4	141				
02:15		4	143			7	112				
02:30		3	139			5	126				
02:45		2	134	22	544	3	159	19	538	41	1082
03:00		6	158			3	149				
03:15		4	148			2	135				
03:30		7	153			4	161				
03:45		6	131	23	590	3	148	12	593	35	1183
04:00		11	145			4	158				
04:15		9	130			9	145				
04:30		14	139			12	166				
04:45		21	152	55	566	11	158	36	627	91	1193
05:00		24	142			13	175				
05:15		39	128			26	154				
05:30		39	175			55	187				
05:45		51	133	153	578	36	171	130	687	283	1265
06:00		74	121			28	163				
06:15		77	109			63	170				
06:30		99	108			78	168				
06:45		115	109	365	447	123	161	292	662	657	1109
07:00		137	115			90	123				
07:15		136	95			139	134				
07:30		158	87			92	126				
07:45		135	98	566	395	109	103	430	486	996	881
08:00		141	103			117	115				
08:15		134	90			125	107				
08:30		131	84			101	69				
08:45		132	73	538	350	109	88	452	379	990	729
09:00		116	64			94	67				
09:15		127	50			116	72				
09:30		111	39			91	70				
09:45		116	32	470	185	102	54	403	263	873	448
10:00		97	44			111	54				
10:15		108	22			107	34				
10:30		113	20			127	41				
10:45		127	25	445	111	135	36	480	165	925	276
11:00		127	35			113	33				
11:15		108	22			143	23				
11:30		126	12			130	21				
11:45		118	14	479	83	123	17	509	94	988	177
Total		3172	4854			2832	5526			6004	10380
Percent		39.5%	60.5%			33.9%	66.1%			36.6%	63.4%

Accurate Counts
978-664-2565

Location : Route 101A West of
Location : Cottage Road
City/State: Milford, NH
Counter : 232

51784AV1
Site Code: 51784001

Start Time	07-Jun-06 Wed	EB Morning	EB Afternoon	Hour Totals Morning	Hour Totals Afternoon	WB Morning	WB Afternoon	Hour Totals Morning	Hour Totals Afternoon	Combined Totals Morning	Combined Totals Afternoon
12:00		8	121			10	112				
12:15		11	148			12	131				
12:30		8	117			9	143				
12:45		4	133	31	519	4	116	35	502	66	1021
01:00		4	124			6	140				
01:15		6	112			3	128				
01:30		7	104			6	135				
01:45		6	112	23	452	6	122	21	525	44	977
02:00		11	137			3	115				
02:15		6	173			4	99				
02:30		3	136			2	126				
02:45		5	156	25	602	1	84	10	424	35	1026
03:00		2	168			5	79				
03:15		4	128			4	124				
03:30		9	166			3	119				
03:45		4	183	19	645	7	78	19	400	38	1045
04:00		8	155			4	71				
04:15		4	185			8	62				
04:30		14	157			12	152				
04:45		21	113	47	610	9	173	33	458	80	1068
05:00		15	135			11	171				
05:15		39	117			29	185				
05:30		42	146			50	110				
05:45		47	159	143	557	41	45	131	511	274	1068
06:00		66	162			37	55				
06:15		81	107			54	109				
06:30		90	127			78	66				
06:45		112	94	349	490	115	100	284	330	633	820
07:00		141	106			101	68				
07:15		169	113			122	46				
07:30		159	70			109	66				
07:45		118	79	587	368	119	39	451	219	1038	587
08:00		142	85			104	60				
08:15		136	87			102	27				
08:30		121	61			107	70				
08:45		144	48	543	281	87	60	400	217	943	498
09:00		124	55			118	56				
09:15		115	37			112	53				
09:30		100	47			113	52				
09:45		124	33	463	172	85	39	428	200	891	372
10:00		95	20			122	36				
10:15		96	25			85	37				
10:30		105	20			93	36				
10:45		124	13	420	78	106	28	406	137	826	215
11:00		117	26			113	23				
11:15		120	22			131	13				
11:30		142	17			114	18				
11:45		130	6	509	71	102	9	460	63	969	134
Total		3159	4845			2678	3986			5837	8831
Percent		39.5%	60.5%			40.2%	59.8%			39.8%	60.2%

Accurate Counts
978-664-2565

Location : Route 101A West of
Location : Cottage Road
City/State: Milford, NH
Counter : 232

51784AV1
Site Code: 51784001

Start Time	08-Jun-06 Thu	EB Morning	EB Afternoon	Hour Totals Morning	Hour Totals Afternoon	WB Morning	WB Afternoon	Hour Totals Morning	Hour Totals Afternoon	Combined Totals Morning	Combined Totals Afternoon
12:00		17	158			15	105				
12:15		4	153			9	104				
12:30		8	159			9	116				
12:45		11	191	40	661	6	81	39	406	79	1067
01:00		5	146			9	101				
01:15		11	128			3	102				
01:30		10	126			4	134				
01:45		4	131	30	531	3	119	19	456	49	987
02:00		12	168			3	89				
02:15		7	141			7	77				
02:30		2	128			5	121				
02:45		3	123	24	560	4	139	19	426	43	986
03:00		8	159			1	102				
03:15		4	164			10	89				
03:30		9	192			9	109				
03:45		10	177	31	692	5	108	25	408	56	1100
04:00		12	175			5	108				
04:15		8	188			10	145				
04:30		8	155			6	148				
04:45		22	167	50	685	7	144	28	545	78	1230
05:00		24	185			5	92				
05:15		46	167			8	129				
05:30		63	155			32	107				
05:45		56	164	189	671	43	86	88	414	277	1085
06:00		76	168			29	88				
06:15		107	154			29	112				
06:30		109	127			56	115				
06:45		139	145	431	594	60	52	174	367	605	961
07:00		133	144			80	51				
07:15		161	100			81	128				
07:30		129	120			94	73				
07:45		139	92	562	456	108	87	363	339	925	795
08:00		137	80			93	88				
08:15		147	108			86	73				
08:30		115	82			96	70				
08:45		115	53	514	323	73	63	348	294	862	617
09:00		108	57			74	55				
09:15		136	46			77	52				
09:30		113	49			91	50				
09:45		100	44	457	196	104	49	346	206	803	402
10:00		135	50			69	35				
10:15		133	34			62	37				
10:30		118	39			98	22				
10:45		112	34	498	157	126	31	355	125	853	282
11:00		125	39			132	19				
11:15		139	17			79	30				
11:30		134	20			109	13				
11:45		127	10	525	86	116	9	436	71	961	157
Total		3351	5612			2240	4057			5591	9669
Percent		37.4%	62.6%			35.6%	64.4%			36.6%	63.4%

Accurate Counts
978-664-2565

Location : Route 101A West of
Location : Cottage Road
City/State: Milford, NH
Counter : 232

51784AV1
Site Code: 51784001

Start	09-Jun-06	EB		Hour Totals		WB		Hour Totals		Combined Totals	
Time	Fri	Morning	Afternoon	Morning	Afternoon	Morning	Afternoon	Morning	Afternoon	Morning	Afternoon
12:00		17	159			9	133				
12:15		15	144			10	98				
12:30		15	146			11	144				
12:45		7	164	54	613	10	104	40	479	94	1092
01:00		8	144			8	112				
01:15		7	165			10	89				
01:30		11	146			1	73				
01:45		8	124	34	579	3	108	22	382	56	961
02:00		6	161			3	104				
02:15		8	162			6	71				
02:30		7	152			6	99				
02:45		4	127	25	602	5	130	20	404	45	1006
03:00		3	160			4	109				
03:15		7	159			4	121				
03:30		6	154			2	111				
03:45		7	132	23	605	4	152	14	493	37	1098
04:00		10	176			5	118				
04:15		8	169			3	115				
04:30		22	167			8	131				
04:45		20	157	60	669	4	147	20	511	80	1180
05:00		17	164			14	154				
05:15		40	153			18	155				
05:30		53	163			20	104				
05:45		64	126	174	606	21	162	73	575	247	1181
06:00		78	157			52	124				
06:15		97	147			34	93				
06:30		122	106			54	130				
06:45		151	116	448	526	60	132	200	479	648	1005
07:00		147	126			53	105				
07:15		164	94			94	118				
07:30		134	94			105	118				
07:45		149	109	594	423	76	118	328	459	922	882
08:00		145	86			85	131				
08:15		150	84			77	78				
08:30		148	84			88	80				
08:45		164	74	607	328	71	62	321	351	928	679
09:00		135	59			68	93				
09:15		113	58			109	68				
09:30		115	47			88	78				
09:45		127	47	490	211	85	73	350	312	840	523
10:00		116	59			91	68				
10:15		102	45			110	64				
10:30		117	39			120	52				
10:45		154	38	489	181	65	48	386	232	875	413
11:00		160	44			84	36				
11:15		135	16			135	41				
11:30		136	31			108	35				
11:45		115	26	546	117	140	22	467	134	1013	251
Total		3544	5460			2241	4811			5785	10271
Percent		39.4%	60.6%			31.8%	68.2%			36.0%	64.0%

Accurate Counts
978-664-2565

Location : Route 101A West of
Location : Cottage Road
City/State: Milford, NH
Counter : 232

51784AV1
Site Code: 51784001

Start Time	10-Jun-06 Sat	EB Morning	EB Afternoon	Hour Totals Morning	Hour Totals Afternoon	WB Morning	WB Afternoon	Hour Totals Morning	Hour Totals Afternoon	Combined Totals Morning	Combined Totals Afternoon
12:00		14	159			24	128				
12:15		9	150			24	99				
12:30		26	177			23	51				
12:45		20	129	69	615	18	129	89	407	158	1022
01:00		25	*			14	*				
01:15		7	*			16	*				
01:30		11	*			12	*				
01:45		10	*	53	0	11	*	53	0	106	0
02:00		8	*			11	*				
02:15		1	*			7	*				
02:30		2	*			9	*				
02:45		9	*	20	0	5	*	32	0	52	0
03:00		5	*			4	*				
03:15		10	*			2	*				
03:30		4	*			5	*				
03:45		9	*	28	0	2	*	13	0	41	0
04:00		6	*			4	*				
04:15		3	*			14	*				
04:30		8	*			8	*				
04:45		15	*	32	0	2	*	28	0	60	0
05:00		13	*			9	*				
05:15		12	*			10	*				
05:30		17	*			16	*				
05:45		26	*	68	0	15	*	50	0	118	0
06:00		38	*			8	*				
06:15		47	*			19	*				
06:30		30	*			38	*				
06:45		60	*	175	0	40	*	105	0	280	0
07:00		60	*			37	*				
07:15		67	*			35	*				
07:30		72	*			53	*				
07:45		80	*	279	0	58	*	183	0	462	0
08:00		101	*			34	*				
08:15		95	*			64	*				
08:30		93	*			84	*				
08:45		88	*	377	0	87	*	269	0	646	0
09:00		119	*			56	*				
09:15		116	*			76	*				
09:30		138	*			88	*				
09:45		148	*	521	0	100	*	320	0	841	0
10:00		126	*			101	*				
10:15		123	*			110	*				
10:30		130	*			120	*				
10:45		146	*	525	0	108	*	439	0	964	0
11:00		153	*			110	*				
11:15		147	*			123	*				
11:30		168	*			110	*				
11:45		149	*	617	0	104	*	447	0	1064	0
Total		2764	615			2028	407			4792	1022
Percent		81.8%	18.2%			83.3%	16.7%			82.4%	17.6%
Grand Total		18750	26135			14553	24246			33303	50381
Percent		41.8%	58.2%			37.5%	62.5%			39.8%	60.2%

ADT Not Calculated

Accurate Counts
978-664-2565

Location : Route 101A West of
Location : Cottage Street
City State: Milford, NH
Counter : 13647

517840A1
Site Code: 51784001

Start Time	15-May-06 EB	15-May-06 WB	Tue EB	Tue WB	Wed EB	Wed WB	Thu EB	Thu WB	Fri EB	Fri WB	Sat EB	Sat WB	Sun EB	Sun WB	Week Average EB	Week Average WB
12:00 AM	*	*	*	*	*	*	*	*	42	51	72	95	86	77	67	74
01:00	*	*	*	*	*	*	*	*	21	40	44	48	58	47	41	45
02:00	*	*	*	*	*	*	*	*	22	24	13	25	20	35	18	28
03:00	*	*	*	*	*	*	*	*	24	15	22	16	17	16	21	16
04:00	*	*	*	*	*	*	*	*	41	29	18	17	21	18	27	21
05:00	*	*	*	*	*	*	*	*	142	79	78	53	50	30	90	54
06:00	*	*	*	*	*	*	*	*	341	248	173	132	102	87	205	156
07:00	*	*	*	*	*	*	*	*	**440**	375	292	201	179	129	304	235
08:00	*	*	*	*	*	*	*	*	419	345	401	374	280	215	367	311
09:00	*	*	*	*	*	*	*	*	377	312	477	398	360	379	405	363
10:00	*	*	*	*	*	*	397	278	354	342	491	**473**	390	**394**	408	372
11:00	*	*	*	*	*	*	**475**	**423**	385	**394**	**504**	395	**461**	392	**456**	**401**
12:00 PM	*	*	*	*	*	*	450	476	420	422	**476**	469	**497**	**479**	461	462
01:00	*	*	*	*	*	*	483	410	403	451	448	488	494	443	457	448
02:00	*	*	*	*	*	*	438	401	456	488	427	461	427	470	437	455
03:00	*	*	*	*	*	*	513	413	497	464	474	**498**	409	428	**473**	451
04:00	*	*	*	*	*	*	464	489	**505**	511	422	450	306	384	424	458
05:00	*	*	*	*	*	*	**524**	432	490	**543**	411	406	357	365	446	436
06:00	*	*	*	*	*	*	421	**579**	429	537	387	419	265	352	376	**472**
07:00	*	*	*	*	*	*	393	438	389	448	340	392	233	272	339	388
08:00	*	*	*	*	*	*	328	369	307	394	250	270	240	218	281	313
09:00	*	*	*	*	*	*	218	274	239	273	243	230	109	131	202	227
10:00	*	*	*	*	*	*	125	155	216	216	151	175	76	103	142	162
11:00	*	*	*	*	*	*	71	103	134	144	103	133	40	50	87	108
Lane	0	0	0	0	0	0	5300	5240	7093	7145	6717	6618	5477	5514	6534	6456
Day	0		0		0		10540		14238		13335		10991		12990	
AM Peak							11:00	11:00	07:00	11:00	11:00	10:00	11:00	10:00	11:00	11:00
Vol.							475	423	440	394	504	473	461	394	456	401
PM Peak							17:00	18:00	16:00	17:00	12:00	15:00	12:00	12:00	15:00	18:00
Vol.							524	579	505	543	476	498	497	479	473	472

Accurate Counts
978-664-2565

Location : Route 101A West of
Location : Cottage Street
City/State: Milford, NH
Counter : 13647

517840A1
Site Code: 51784001

Start Time	22-May-06 EB	22-May-06 WB	Tue EB	Tue WB	Wed EB	Wed WB	Thu EB	Thu WB	Fri EB	Fri WB	Sat EB	Sat WB	Sun EB	Sun WB	Week Average EB	Week Average WB
12:00 AM	22	35	33	35	34	40	33	48	37	70	58	67	76	74	42	53
01:00	28	26	14	20	17	26	16	28	23	33	54	56	92	38	35	32
02:00	14	7	17	10	19	7	24	19	23	17	21	20	15	18	19	14
03:00	17	17	17	14	23	16	27	20	28	18	22	26	20	15	22	18
04:00	57	24	52	24	49	29	36	33	38	27	28	22	22	13	40	25
05:00	146	119	154	130	138	110	145	123	121	98	55	53	51	33	116	95
06:00	317	250	333	236	341	256	346	243	339	238	151	127	102	82	276	205
07:00	**497**	369	**479**	368	**506**	375	**517**	383	471	373	255	199	170	163	414	319
08:00	480	351	425	357	441	349	421	376	521	371	356	362	271	222	416	341
09:00	395	345	371	363	452	315	419	368	456	418	457	397	333	359	412	366
10:00	379	368	398	382	386	339	390	379	460	**432**	**518**	400	392	353	418	379
11:00	417	**417**	436	**414**	459	**418**	468	**412**	**529**	407	514	**433**	**428**	**413**	**464**	**416**
12:00 PM	443	441	516	429	462	413	526	441	480	439	**492**	472	429	**441**	478	439
01:00	464	446	423	417	387	448	490	429	477	465	479	**478**	422	399	449	440
02:00	463	441	473	459	454	480	498	438	513	451	437	451	383	393	460	445
03:00	489	485	459	485	**513**	490	**551**	481	490	477	483	467	**440**	370	**489**	465
04:00	456	**540**	479	474	510	533	506	503	523	**549**	453	459	352	324	468	**483**
05:00	**520**	510	**550**	500	495	**583**	536	471	**548**	501	415	421	337	340	486	475
06:00	398	493	401	**526**	442	520	453	**533**	416	490	358	387	312	328	397	468
07:00	305	384	352	420	401	419	400	455	379	374	270	398	293	424	343	411
08:00	266	276	265	301	326	324	375	386	244	309	315	352	245	292	291	320
09:00	159	199	183	208	183	228	280	261	228	236	205	253	177	196	202	226
10:00	101	124	115	129	113	135	140	179	144	171	204	188	146	142	138	153
11:00	68	76	74	82	79	87	76	87	116	158	116	125	110	141	91	108
Lane	6901	6743	7019	6783	7230	6940	7673	7096	7604	7122	6716	6613	5618	5573	6966	6696
Day	13644		13802		14170		14769		14726		13329		11191		13662	
AM Peak	07:00	11:00	07:00	11:00	07:00	11:00	07:00	11:00	11:00	10:00	10:00	11:00	11:00	11:00	11:00	11:00
Vol.	497	417	479	414	506	418	517	412	529	432	518	433	428	413	464	416
PM Peak	17:00	16:00	17:00	18:00	15:00	17:00	15:00	18:00	17:00	16:00	12:00	13:00	15:00	12:00	15:00	16:00
Vol.	520	540	550	526	513	583	551	533	548	549	492	478	440	441	489	483

Accurate Counts
978-664-2565

Location : Route 101A West of
Location : Cottage Street
City State: Milford, NH
Counter : 13647

517840A1
Site Code: 51784001

Start Time	29-May-06 EB	29-May-06 WB	Tue EB	Tue WB	Wed EB	Wed WB	Thu EB	Thu WB	Fri EB	Fri WB	Sat EB	Sat WB	Sun EB	Sun WB	Week Average EB	Week Average WB
12:00 AM	85	74	17	35	28	41	36	53	40	41	141	11	136	**21**	69	39
01:00	126	35	12	19	19	22	21	34	27	23	103	0	75	3	55	19
02:00	16	23	18	11	18	12	26	22	20	11	50	0	38	1	27	11
03:00	30	26	21	7	24	16	21	15	9	31	40	1	36	0	26	14
04:00	33	34	36	27	45	21	38	29	19	46	50	8	31	0	36	24
05:00	49	33	138	105	143	122	146	135	122	106	77	31	75	0	107	76
06:00	91	77	359	266	350	256	362	268	288	283	110	136	166	1	247	184
07:00	149	125	494	385	**495**	391	**560**	381	533	404	220	168	237	0	384	265
08:00	209	190	**510**	376	484	409	543	426	**542**	412	307	316	333	2	418	304
09:00	**265**	**264**	439	398	484	400	453	427	300	**545**	403	382	429	0	396	345
10:00	133	115	382	367	442	388	456	385	430	398	461	**447**	496	0	400	300
11:00	135	162	430	**432**	479	**446**	515	**457**	496	494	**525**	433	**532**	3	**445**	**347**
12:00 PM	377	370	478	454	524	477	500	512	530	517	**521**	501	540	3	**496**	405
01:00	**388**	348	493	481	482	496	473	507	494	502	403	507	**565**	4	471	406
02:00	380	**403**	498	456	554	419	544	454	501	518	457	444	515	5	493	386
03:00	376	383	561	496	503	475	**595**	483	557	492	243	**659**	523	7	480	428
04:00	380	335	544	559	**580**	**571**	519	546	549	**592**	193	640	499	**8**	466	**464**
05:00	353	354	**572**	**624**	569	543	551	588	**564**	536	249	513	477	5	476	452
06:00	330	319	413	516	441	540	490	**663**	449	501	259	477	435	6	402	432
07:00	314	356	349	426	432	442	413	449	415	385	225	399	450	3	371	351
08:00	268	288	316	312	323	367	208	450	360	281	251	232	376	0	300	276
09:00	165	172	150	202	265	264	193	213	288	162	272	141	244	0	225	165
10:00	92	139	70	139	117	155	145	125	269	95	202	113	160	0	151	109
11:00	53	56	68	68	71	97	68	115	219	67	147	54	104	0	104	65
Lane	4797	4681	7368	7161	7872	7370	7876	7737	8021	7442	5909	6613	7472	72	7045	5867
Day	9478		14529		15242		15613		15463		12522		7544		12912	
AM Peak	09:00	09:00	08:00	11:00	07:00	11:00	07:00	11:00	08:00	09:00	11:00	10:00	11:00	00:00	11:00	11:00
Vol.	265	264	510	432	495	446	560	457	542	545	525	447	532	21	445	347
PM Peak	13:00	14:00	17:00	17:00	16:00	16:00	15:00	18:00	17:00	16:00	12:00	15:00	13:00	16:00	12:00	16:00
Vol.	388	403	572	624	580	571	595	663	564	592	521	659	565	8	496	464

Accurate Counts
978-664-2565

Location : Route 101A West of
Location : Cottage Street
City/State: Milford, NH
Counter : 13647

517840A1
Site Code: 51784001

Start Time	05-Jun-06 EB	05-Jun-06 WB	Tue EB	Tue WB	Wed EB	Wed WB	Thu EB	Thu WB	Fri EB	Fri WB	Sat EB	Sat WB	Sun EB	Sun WB	Week Average EB	Week Average WB
12:00 AM	**75**	0	*	*	*	*	*	*	*	*	*	*	*	*	**75**	0
01:00	41	0	*	*	*	*	*	*	*	*	*	*	*	*	41	0
02:00	24	0	*	*	*	*	*	*	*	*	*	*	*	*	24	0
03:00	32	0	*	*	*	*	*	*	*	*	*	*	*	*	32	0
04:00	65	0	*	*	*	*	*	*	*	*	*	*	*	*	65	0
05:00	58	**1**	*	*	*	*	*	*	*	*	*	*	*	*	58	**1**
06:00	0	0	*	*	*	*	*	*	*	*	*	*	*	*	0	0
07:00	*	*	*	*	*	*	*	*	*	*	*	*	*	*	*	*
08:00	*	*	*	*	*	*	*	*	*	*	*	*	*	*	*	*
09:00	*	*	*	*	*	*	*	*	*	*	*	*	*	*	*	*
10:00	*	*	*	*	*	*	*	*	*	*	*	*	*	*	*	*
11:00	*	*	*	*	*	*	*	*	*	*	*	*	*	*	*	*
12:00 PM	*	*	*	*	*	*	*	*	*	*	*	*	*	*	*	*
01:00	*	*	*	*	*	*	*	*	*	*	*	*	*	*	*	*
02:00	*	*	*	*	*	*	*	*	*	*	*	*	*	*	*	*
03:00	*	*	*	*	*	*	*	*	*	*	*	*	*	*	*	*
04:00	*	*	*	*	*	*	*	*	*	*	*	*	*	*	*	*
05:00	*	*	*	*	*	*	*	*	*	*	*	*	*	*	*	*
06:00	*	*	*	*	*	*	*	*	*	*	*	*	*	*	*	*
07:00	*	*	*	*	*	*	*	*	*	*	*	*	*	*	*	*
08:00	*	*	*	*	*	*	*	*	*	*	*	*	*	*	*	*
09:00	*	*	*	*	*	*	*	*	*	*	*	*	*	*	*	*
10:00	*	*	*	*	*	*	*	*	*	*	*	*	*	*	*	*
11:00	*	*	*	*	*	*	*	*	*	*	*	*	*	*	*	*
Lane	295	1	0	0	0	0	0	0	0	0	0	0	0	0	295	1
Day	296		0		0		0		0		0		0		296	
AM Peak	00:00	05:00													00:00	05:00
Vol.	75	1													75	1
PM Peak																
Vol.																
Comb. Total	23418		28331		29412		40922		44427		39186		29726		39860	
ADT	Not Calculated															

Accurate Counts
978-664-2565

Location : Route 101A West of
Location : Cottage Road
City/State: Milford, NH
Counter : 232

51784AV1
Site Code: 51784001

Start Time	05-Jun-06 EB	05-Jun-06 WB	Tue EB	Tue WB	Wed EB	Wed WB	Thu EB	Thu WB	Fri EB	Fri WB	Sat EB	Sat WB	Sun EB	Sun WB	Week Average EB	Week Average WB
12:00 AM	*	*	38	44	31	35	40	39	54	40	69	89	*	*	46	49
01:00	*	*	18	25	23	21	30	19	34	22	53	53	*	*	32	28
02:00	*	*	22	19	25	10	24	19	25	20	20	32	*	*	23	20
03:00	*	*	23	12	19	19	31	25	23	14	28	13	*	*	25	17
04:00	*	*	55	36	47	33	50	28	60	20	32	28	*	*	49	29
05:00	*	*	153	130	143	131	189	88	174	73	68	50	*	*	145	94
06:00	358	302	365	292	349	284	431	174	448	200	175	105	*	*	354	226
07:00	**548**	469	**566**	430	**587**	451	**562**	363	594	328	279	183	*	*	**523**	371
08:00	518	438	538	452	543	400	514	348	**607**	321	377	269	*	*	516	371
09:00	424	407	470	403	463	428	457	346	490	350	521	320	*	*	471	376
10:00	458	433	445	480	420	406	498	355	489	386	525	439	*	*	472	416
11:00	454	**485**	479	**509**	509	**460**	525	**436**	546	**467**	**617**	**447**	*	*	522	**467**
12:00 PM	517	576	513	524	519	502	661	406	613	479	**615**	**407**	*	*	573	482
01:00	471	531	492	508	452	**525**	531	456	579	382	*	*	*	*	505	480
02:00	527	583	544	538	602	424	560	426	602	404	*	*	*	*	567	475
03:00	584	612	**590**	593	**645**	400	**692**	408	605	493	*	*	*	*	**623**	501
04:00	571	**733**	566	627	610	458	685	**545**	**669**	511	*	*	*	*	620	**575**
05:00	**641**	672	578	**687**	557	511	671	414	606	**575**	*	*	*	*	611	572
06:00	466	570	447	662	490	330	594	367	526	479	*	*	*	*	505	482
07:00	312	391	395	486	368	219	456	339	423	459	*	*	*	*	391	379
08:00	309	355	350	379	281	217	323	294	328	351	*	*	*	*	318	319
09:00	175	211	185	263	172	200	196	206	211	312	*	*	*	*	188	238
10:00	111	148	111	165	78	137	157	125	181	232	*	*	*	*	128	161
11:00	65	77	83	94	71	63	86	71	117	134	*	*	*	*	84	88
Lane	7509	7993	8026	8358	8004	6664	8963	6297	9004	7052	3379	2435	0	0	8291	7216
Day	15502		16384		14668		15260		16056		5814		0		15507	
AM Peak	07:00	11:00	07:00	11:00	07:00	11:00	07:00	11:00	08:00	11:00	11:00	11:00			07:00	11:00
Vol.	548	485	566	509	587	460	562	436	607	467	617	447			523	467
PM Peak	17:00	16:00	15:00	17:00	15:00	13:00	15:00	16:00	16:00	17:00	12:00	12:00			15:00	16:00
Vol.	641	733	590	687	645	525	692	545	669	575	615	407			623	575
Comb. Total	15502		16384		14668		15260		16056		5814		0		15507	
ADT	Not Calculated															

Attachment D-4

Automatic Traffic Recorder Data –
West Road south of Crosby Street

Accurate Counts
978-664-2565

Location : West Road South of
Location : Crosby Street
City/State: Milford, NH
Counter : 10122

51784002
Site Code: 51784002

Start Time	06-May-0 Sat	SB Morning	SB Afternoon	Hour Totals Morning	Hour Totals Afternoon	NB Morning	NB Afternoon	Hour Totals Morning	Hour Totals Afternoon	Combined Totals Morning	Combined Totals Afternoon
12:00		6	50			5	41				
12:15		10	34			6	49				
12:30		3	53			0	52				
12:45		3	47	22	184	4	98	15	240	37	424
01:00		8	55			4	85				
01:15		3	41			2	44				
01:30		1	49			3	35				
01:45		0	43	12	188	4	45	13	209	25	397
02:00		0	56			2	35				
02:15		0	37			2	39				
02:30		1	40			1	46				
02:45		1	43	2	176	1	47	6	167	8	343
03:00		0	54			0	47				
03:15		0	45			1	63				
03:30		0	45			0	45				
03:45		0	40	0	184	1	39	2	194	2	378
04:00		3	37			2	40				
04:15		0	38			4	30				
04:30		0	29			3	32				
04:45		5	47	8	151	3	47	12	149	20	300
05:00		5	46			0	50				
05:15		1	54			7	34				
05:30		4	47			8	32				
05:45		2	47	12	194	10	33	25	149	37	343
06:00		2	36			5	38				
06:15		7	41			14	33				
06:30		10	37			9	27				
06:45		15	18	34	132	25	22	53	120	87	252
07:00		22	30			17	33				
07:15		32	34			18	16				
07:30		77	24			56	33				
07:45		36	18	167	106	49	23	140	105	307	211
08:00		23	31			34	24				
08:15		13	16			28	22				
08:30		24	31			19	11				
08:45		30	22	90	100	50	13	131	70	221	170
09:00		34	16			33	10				
09:15		36	22			32	64				
09:30		30	13			27	25				
09:45		43	17	143	68	34	13	126	112	269	180
10:00		48	14			56	12				
10:15		35	7			60	6				
10:30		39	19			47	8				
10:45		47	9	169	49	41	8	204	34	373	83
11:00		53	11			56	5				
11:15		50	6			49	7				
11:30		62	6			40	3				
11:45		44	6	209	29	62	6	207	21	416	50
Total		868	1561			934	1570			1802	3131
Percent		35.7%	64.3%			37.3%	62.7%			36.5%	63.5%

Accurate Counts
978-664-2565

Location : West Road South of
Location : Crosby Street
City/State: Milford, NH
Counter : 10122

51784002
Site Code: 51784002

Start Time	07-May-0 Sun	SB Morning	SB Afternoon	Hour Totals Morning	Hour Totals Afternoon	NB Morning	NB Afternoon	Hour Totals Morning	Hour Totals Afternoon	Combined Totals Morning	Combined Totals Afternoon
12:00		7	40			6	27				
12:15		9	28			12	47				
12:30		12	31			5	50				
12:45		6	33	34	132	5	34	28	158	62	290
01:00		4	27			3	39				
01:15		4	40			1	33				
01:30		3	40			2	46				
01:45		5	43	16	150	0	25	6	143	22	293
02:00		0	22			0	29				
02:15		5	38			4	28				
02:30		0	24			0	27				
02:45		1	19	6	103	2	22	6	106	12	209
03:00		2	39			0	36				
03:15		0	38			3	56				
03:30		0	38			0	32				
03:45		1	33	3	148	0	29	3	153	6	301
04:00		1	38			1	29				
04:15		0	26			0	27				
04:30		0	32			3	33				
04:45		0	28	1	124	1	22	5	111	6	235
05:00		1	32			4	22				
05:15		2	23			5	20				
05:30		2	33			4	26				
05:45		0	43	5	131	5	49	18	117	23	248
06:00		1	33			4	23				
06:15		2	24			6	24				
06:30		2	24			9	23				
06:45		11	25	16	106	11	16	30	86	46	192
07:00		6	27			7	24				
07:15		5	26			7	31				
07:30		11	24			13	27				
07:45		8	28	30	105	12	21	39	103	69	208
08:00		11	25			12	17				
08:15		10	19			11	14				
08:30		13	19			24	12				
08:45		13	23	47	86	20	10	67	53	114	139
09:00		32	19			21	16				
09:15		38	15			23	11				
09:30		32	10			34	11				
09:45		20	6	122	50	26	8	104	46	226	96
10:00		35	3			43	4				
10:15		37	12			26	6				
10:30		37	5			22	5				
10:45		27	5	136	25	27	2	118	17	254	42
11:00		36	5			42	4				
11:15		26	4			31	4				
11:30		29	3			40	2				
11:45		41	3	132	15	35	4	148	14	280	29
Total		548	1175			572	1107			1120	2282
Percent		31.8%	68.2%			34.1%	65.9%			32.9%	67.1%

Accurate Counts
978-664-2565

Location : West Road South of
Location : Crosby Street
City/State: Milford, NH
Counter : 10122

51784002
Site Code: 51784002

Start Time	08-May-0 Mon	SB Morning	SB Afternoon	Hour Totals Morning	Hour Totals Afternoon	NB Morning	NB Afternoon	Hour Totals Morning	Hour Totals Afternoon	Combined Totals Morning	Combined Totals Afternoon
12:00		3	31			4	41				
12:15		0	45			0	38				
12:30		0	52			1	40				
12:45		0	34	3	162	0	62	5	181	8	343
01:00		0	28			0	31				
01:15		2	23			1	24				
01:30		1	33			1	37				
01:45		1	41	4	125	3	36	5	128	9	253
02:00		0	52			2	37				
02:15		1	52			0	131				
02:30		1	41			1	63				
02:45		1	37	3	182	1	60	4	291	7	473
03:00		0	35			1	58				
03:15		0	40			1	40				
03:30		2	58			1	63				
03:45		1	51	3	184	1	65	4	226	7	410
04:00		1	36			2	65				
04:15		3	43			4	44				
04:30		0	43			2	57				
04:45		2	48	6	170	3	53	11	219	17	389
05:00		3	52			10	44				
05:15		5	47			7	49				
05:30		1	51			10	50				
05:45		7	46	16	196	17	39	44	182	60	378
06:00		11	64			13	44				
06:15		16	44			21	47				
06:30		18	48			28	40				
06:45		51	40	96	196	45	42	107	173	203	369
07:00		87	38			50	44				
07:15		121	37			78	26				
07:30		74	41			101	32				
07:45		27	31	309	147	39	26	268	128	577	275
08:00		24	39			35	15				
08:15		29	29			45	21				
08:30		43	18			28	17				
08:45		44	15	140	101	33	19	141	72	281	173
09:00		39	18			38	20				
09:15		23	14			34	7				
09:30		19	7			33	10				
09:45		19	7	100	46	21	5	126	42	226	88
10:00		20	9			26	2				
10:15		17	3			15	11				
10:30		35	9			22	7				
10:45		25	6	97	27	37	3	100	23	197	50
11:00		23	13			21	3				
11:15		28	8			33	2				
11:30		32	1			27	2				
11:45		29	3	112	25	26	2	107	9	219	34
Total		889	1561			922	1674			1811	3235
Percent		36.3%	63.7%			35.5%	64.5%			35.9%	64.1%

Accurate Counts
978-664-2565

Location : West Road South of
Location : Crosby Street
City/State: Milford, NH
Counter : 10122

51784002
Site Code: 51784002

Start Time	09-May-0 Tue	SB Morning	SB Afternoon	Hour Totals Morning	Hour Totals Afternoon	NB Morning	NB Afternoon	Hour Totals Morning	Hour Totals Afternoon	Combined Totals Morning	Combined Totals Afternoon
12:00		3	37			1	45				
12:15		3	32			1	41				
12:30		1	31			1	26				
12:45		2	45	9	145	0	64	3	176	12	321
01:00		3	30			1	27				
01:15		2	29			1	31				
01:30		0	28			1	39				
01:45		1	37	6	124	0	31	3	128	9	252
02:00		1	54			0	31				
02:15		1	51			0	145				
02:30		1	46			1	71				
02:45		0	41	3	192	0	48	1	295	4	487
03:00		0	56			2	53				
03:15		0	48			2	46				
03:30		0	35			1	49				
03:45		0	47	0	186	0	52	5	200	5	386
04:00		1	44			5	40				
04:15		0	44			1	45				
04:30		1	40			2	33				
04:45		3	38	5	166	3	40	11	158	16	324
05:00		3	50			9	59				
05:15		3	47			11	36				
05:30		2	41			10	34				
05:45		8	49	16	187	17	38	47	167	63	354
06:00		12	31			14	36				
06:15		15	28			25	26				
06:30		24	32			28	56				
06:45		35	47	86	138	28	33	95	151	181	289
07:00		74	35			33	26				
07:15		118	33			72	37				
07:30		74	31			110	31				
07:45		26	36	292	135	45	19	260	113	552	248
08:00		30	26			33	21				
08:15		33	14			32	10				
08:30		33	16			26	21				
08:45		30	18	126	74	41	33	132	85	258	159
09:00		28	12			24	11				
09:15		28	19			42	18				
09:30		23	13			27	7				
09:45		17	8	96	52	22	7	115	43	211	95
10:00		24	5			21	10				
10:15		23	7			20	9				
10:30		30	8			40	5				
10:45		22	1	99	21	40	6	121	30	220	51
11:00		19	8			25	3				
11:15		34	5			19	2				
11:30		33	2			29	1				
11:45		24	2	110	17	28	2	101	8	211	25
Total		848	1437			894	1554			1742	2991
Percent		37.1%	62.9%			36.5%	63.5%			36.8%	63.2%

Accurate Counts
978-664-2565

Location : West Road South of
Location : Crosby Street
City/State: Milford, NH
Counter : 10122

51784002
Site Code: 51784002

Start Time	10-May-0 Wed	SB Morning	SB Afternoon	Hour Totals Morning	Hour Totals Afternoon	NB Morning	NB Afternoon	Hour Totals Morning	Hour Totals Afternoon	Combined Totals Morning	Combined Totals Afternoon
12:00		2	36			0	45				
12:15		4	25			3	35				
12:30		3	50			1	46				
12:45		2	30	11	141	0	50	4	176	15	317
01:00		0	32			2	26				
01:15		2	19			2	21				
01:30		1	43			1	27				
01:45		2	42	5	136	2	38	7	112	12	248
02:00		3	55			0	33				
02:15		1	31			0	126				
02:30		0	47			0	81				
02:45		0	54	4	187	0	50	0	290	4	477
03:00		0	39			1	47				
03:15		0	45			0	48				
03:30		0	56			0	53				
03:45		0	48	0	188	0	58	1	206	1	394
04:00		0	43			3	51				
04:15		0	40			0	36				
04:30		0	46			1	44				
04:45		1	45	1	174	6	43	10	174	11	348
05:00		4	49			10	69				
05:15		2	50			10	47				
05:30		3	43			11	39				
05:45		12	38	21	180	9	43	40	198	61	378
06:00		11	46			14	27				
06:15		6	33			17	24				
06:30		23	35			22	31				
06:45		41	35	81	149	33	24	86	106	167	255
07:00		72	19			30	37				
07:15		118	29			86	33				
07:30		96	28			105	24				
07:45		25	25	311	101	39	16	260	110	571	211
08:00		22	15			31	18				
08:15		27	31			41	19				
08:30		35	23			31	11				
08:45		33	30	117	99	33	37	136	85	253	184
09:00		29	12			31	11				
09:15		31	19			35	12				
09:30		21	14			27	11				
09:45		23	10	104	55	28	3	121	37	225	92
10:00		10	8			23	4				
10:15		25	8			21	13				
10:30		32	6			25	3				
10:45		30	4	97	26	38	4	107	24	204	50
11:00		24	5			28	3				
11:15		20	4			30	2				
11:30		28	3			36	5				
11:45		32	3	104	15	24	3	118	13	222	28
Total		856	1451			890	1531			1746	2982
Percent		37.1%	62.9%			36.8%	63.2%			36.9%	63.1%

Accurate Counts
978-664-2565

Location : West Road South of
Location : Crosby Street
City/State: Milford, NH
Counter : 10122

51784002
Site Code: 51784002

Start	11-May-0	SB		Hour Totals		NB		Hour Totals		Combined Totals	
Time	Thu	Morning	Afternoon	Morning	Afternoon	Morning	Afternoon	Morning	Afternoon	Morning	Afternoon
12:00		3	27			2	43				
12:15		3	32			2	36				
12:30		1	40			3	43				
12:45		1	44	8	143	2	61	9	183	17	326
01:00		0	36			2	30				
01:15		0	21			1	28				
01:30		1	18			0	26				
01:45		1	39	2	114	0	36	3	120	5	234
02:00		0	48			1	34				
02:15		0	37			0	127				
02:30		0	47			1	59				
02:45		0	57	0	189	0	56	2	276	2	465
03:00		0	55			0	53				
03:15		0	45			0	46				
03:30		0	44			1	39				
03:45		0	56	0	200	1	38	2	176	2	376
04:00		1	46			2	65				
04:15		1	56			1	60				
04:30		0	47			5	60				
04:45		1	48	3	197	3	51	11	236	14	433
05:00		3	57			9	45				
05:15		1	45			10	55				
05:30		5	46			17	40				
05:45		8	50	17	198	12	61	48	201	65	399
06:00		12	54			15	42				
06:15		10	64			21	28				
06:30		23	36			24	43				
06:45		43	46	88	200	34	47	94	160	182	360
07:00		88	52			43	59				
07:15		118	33			75	37				
07:30		73	39			101	49				
07:45		36	26	315	150	45	43	264	188	579	338
08:00		38	24			30	30				
08:15		37	25			44	42				
08:30		27	21			25	18				
08:45		34	19	136	89	31	19	130	109	266	198
09:00		39	17			32	12				
09:15		26	12			45	17				
09:30		26	15			27	14				
09:45		27	13	118	57	28	6	132	49	250	106
10:00		16	10			23	4				
10:15		18	20			18	11				
10:30		27	11			26	24				
10:45		27	4	88	45	70	4	137	43	225	88
11:00		24	12			25	3				
11:15		35	4			33	2				
11:30		30	6			31	3				
11:45		40	7	129	29	28	6	117	14	246	43
Total		904	1611			949	1755			1853	3366
Percent		35.9%	64.1%			35.1%	64.9%			35.5%	64.5%

Accurate Counts
978-664-2565

Location : West Road South of
Location : Crosby Street
City/State: Milford, NH
Counter : 10122

51784002
Site Code: 51784002

Start	12-May-0	SB		Hour Totals		NB		Hour Totals		Combined Totals	
Time	Fri	Morning	Afternoon	Morning	Afternoon	Morning	Afternoon	Morning	Afternoon	Morning	Afternoon
12:00		1	39			2	47				
12:15		5	49			2	42				
12:30		4	46			4	35				
12:45		1	29	11	163	0	48	8	172	19	335
01:00		3	39			1	28				
01:15		3	30			2	38				
01:30		0	26			1	35				
01:45		0	41	6	136	1	20	5	121	11	257
02:00		0	59			0	37				
02:15		4	43			0	138				
02:30		2	56			2	70				
02:45		0	48	6	206	0	64	2	309	8	515
03:00		1	42			1	42				
03:15		1	42			0	59				
03:30		0	62			3	51				
03:45		0	44	2	190	0	51	4	203	6	393
04:00		5	47			1	53				
04:15		0	38			2	52				
04:30		0	50			3	39				
04:45		3	49	8	184	2	51	8	195	16	379
05:00		1	41			11	51				
05:15		4	42			8	41				
05:30		5	43			14	51				
05:45		7	54	17	180	14	45	47	188	64	368
06:00		11	41			9	44				
06:15		11	40			17	34				
06:30		21	45			31	35				
06:45		42	35	85	161	22	37	79	150	164	311
07:00		78	41			35	48				
07:15		121	26			91	24				
07:30		74	29			109	24				
07:45		35	26	308	122	37	12	272	108	580	230
08:00		42	20			37	21				
08:15		27	24			41	12				
08:30		32	19			33	22				
08:45		34	15	135	78	46	18	157	73	292	151
09:00		34	20			41	12				
09:15		32	20			36	12				
09:30		19	16			23	10				
09:45		39	17	124	73	24	9	124	43	248	116
10:00		27	14			23	19				
10:15		28	11			28	9				
10:30		30	14			29	6				
10:45		27	10	112	49	44	9	124	43	236	92
11:00		24	11			32	7				
11:15		22	10			50	5				
11:30		50	5			36	7				
11:45		33	9	129	35	28	4	146	23	275	58
Total		943	1577			976	1628			1919	3205
Percent		37.4%	62.6%			37.5%	62.5%			37.5%	62.5%

Accurate Counts
978-664-2565

Location : West Road South of
Location : Crosby Street
City/State: Milford, NH
Counter : 10122

51784002
Site Code: 51784002

Start Time	13-May-0 Sat	SB Morning	SB Afternoon	Hour Totals Morning	Hour Totals Afternoon	NB Morning	NB Afternoon	Hour Totals Morning	Hour Totals Afternoon	Combined Totals Morning	Combined Totals Afternoon
12:00		4	31			2	46				
12:15		5	44			5	35				
12:30		5	26			6	35				
12:45		2	40	16	141	0	32	13	148	29	289
01:00		3	32			1	29				
01:15		5	31			3	36				
01:30		6	30			2	27				
01:45		2	38	16	131	1	27	7	119	23	250
02:00		3	34			2	24				
02:15		1	28			4	21				
02:30		0	30			2	37				
02:45		1	39	5	131	0	28	8	110	13	241
03:00		1	30			1	34				
03:15		3	30			0	26				
03:30		0	29			0	26				
03:45		0	28	4	117	2	25	3	111	7	228
04:00		1	29			4	27				
04:15		0	31			2	24				
04:30		0	22			2	21				
04:45		2	30	3	112	2	29	10	101	13	213
05:00		1	32			3	17				
05:15		3	32			5	25				
05:30		2	24			6	21				
05:45		3	32	9	120	10	39	24	102	33	222
06:00		3	24			4	32				
06:15		8	26			11	25				
06:30		8	29			12	24				
06:45		9	23	28	102	12	21	39	102	67	204
07:00		2	18			12	18				
07:15		11	16			14	15				
07:30		13	21			21	27				
07:45		10	27	36	82	24	19	71	79	107	161
08:00		11	16			23	20				
08:15		14	25			16	8				
08:30		9	14			26	18				
08:45		22	16	56	71	34	13	99	59	155	130
09:00		31	20			34	13				
09:15		32	15			34	10				
09:30		16	12			28	15				
09:45		34	11	113	58	34	10	130	48	243	106
10:00		29	7			43	10				
10:15		38	11			32	3				
10:30		38	16			30	11				
10:45		36	7	141	41	44	11	149	35	290	76
11:00		36	13			32	7				
11:15		38	14			32	8				
11:30		40	8			33	10				
11:45		40	5	154	40	37	4	134	29	288	69
Total		581	1146			687	1043			1268	2189
Percent		33.6%	66.4%			39.7%	60.3%			36.7%	63.3%

Accurate Counts
978-664-2565

Location : West Road South of
Location : Crosby Street
City/State: Milford, NH
Counter : 10122

51784002
Site Code: 51784002

Start Time	14-May-0 Sun	SB Morning	SB Afternoon	Hour Totals Morning	Hour Totals Afternoon	NB Morning	NB Afternoon	Hour Totals Morning	Hour Totals Afternoon	Combined Totals Morning	Combined Totals Afternoon
12:00		6	27			8	41				
12:15		5	17			8	42				
12:30		1	22			2	31				
12:45		3	24	15	90	4	37	22	151	37	241
01:00		8	28			3	28				
01:15		3	28			1	23				
01:30		4	24			3	27				
01:45		2	31	17	111	2	28	9	106	26	217
02:00		3	27			2	20				
02:15		0	29			0	19				
02:30		1	25			1	23				
02:45		0	26	4	107	1	15	4	77	8	184
03:00		0	24			0	26				
03:15		1	26			1	23				
03:30		1	32			0	25				
03:45		0	26	2	108	2	28	3	102	5	210
04:00		0	23			1	22				
04:15		1	25			1	29				
04:30		1	27			2	27				
04:45		0	25	2	100	0	25	4	103	6	203
05:00		1	25			1	23				
05:15		1	29			8	24				
05:30		5	24			2	22				
05:45		3	18	10	96	5	27	16	96	26	192
06:00		2	23			4	20				
06:15		6	14			9	20				
06:30		4	26			12	18				
06:45		4	29	16	92	6	25	31	83	47	175
07:00		7	18			8	25				
07:15		8	23			12	21				
07:30		5	21			11	27				
07:45		11	24	31	86	15	17	46	90	77	176
08:00		10	23			13	14				
08:15		6	14			9	14				
08:30		11	17			17	20				
08:45		9	22	36	76	16	9	55	57	91	133
09:00		15	16			12	9				
09:15		21	9			22	7				
09:30		19	14			25	14				
09:45		16	10	71	49	19	10	78	40	149	89
10:00		16	10			23	8				
10:15		26	7			25	7				
10:30		21	8			18	3				
10:45		31	4	94	29	22	5	88	23	182	52
11:00		20	7			26	6				
11:15		21	5			30	4				
11:30		28	7			32	6				
11:45		17	5	86	24	34	4	122	20	208	44
Total		384	968			478	948			862	1916
Percent		28.4%	71.6%			33.5%	66.5%			31.0%	69.0%

Accurate Counts
978-664-2565

Location : West Road South of
Location : Crosby Street
City/State: Milford, NH
Counter : 10122

51784002
Site Code: 51784002

Start Time	15-May-0 Mon	SB Morning	SB Afternoon	Hour Totals Morning	Hour Totals Afternoon	NB Morning	NB Afternoon	Hour Totals Morning	Hour Totals Afternoon	Combined Totals Morning	Combined Totals Afternoon
12:00		5	36			1	45				
12:15		4	41			0	39				
12:30		3	32			4	35				
12:45		0	30	12	139	1	34	6	153	18	292
01:00		2	39			2	27				
01:15		0	26			0	40				
01:30		1	32			0	26				
01:45		1	31	4	128	2	27	4	120	8	248
02:00		1	20			1	35				
02:15		0	30			1	28				
02:30		1	18			0	32				
02:45		0	21	2	89	1	40	3	135	5	224
03:00		1	30			0	30				
03:15		1	29			0	32				
03:30		1	39			0	39				
03:45		0	40	3	138	3	36	3	137	6	275
04:00		1	29			4	40				
04:15		0	31			0	40				
04:30		2	39			4	44				
04:45		3	37	6	136	2	45	10	169	16	305
05:00		1	37			7	53				
05:15		0	36			9	46				
05:30		4	41			12	35				
05:45		9	43	14	157	12	36	40	170	54	327
06:00		8	43			14	45				
06:15		6	30			28	26				
06:30		8	35			18	23				
06:45		16	29	38	137	30	33	90	127	128	264
07:00		14	31			20	33				
07:15		22	29			21	23				
07:30		14	31			29	20				
07:45		14	26	64	117	25	18	95	94	159	211
08:00		20	23			24	17				
08:15		16	19			19	13				
08:30		14	25			16	14				
08:45		18	8	68	75	19	16	78	60	146	135
09:00		15	10			25	8				
09:15		17	14			26	6				
09:30		11	12			22	8				
09:45		17	6	60	42	24	6	97	28	157	70
10:00		12	13			17	4				
10:15		27	14			24	6				
10:30		29	1			32	5				
10:45		24	4	92	32	23	6	96	21	188	53
11:00		22	6			32	7				
11:15		28	6			27	7				
11:30		17	1			30	2				
11:45		32	2	99	15	27	1	116	17	215	32
Total		462	1205			638	1231			1100	2436
Percent		27.7%	72.3%			34.1%	65.9%			31.1%	68.9%

Accurate Counts
978-664-2565

Location : West Road South of
Location : Crosby Street
City/State: Milford, NH
Counter : 10122

51784002
Site Code: 51784002

Start Time	16-May-0 Tue	SB Morning	SB Afternoon	Hour Totals Morning	Hour Totals Afternoon	NB Morning	NB Afternoon	Hour Totals Morning	Hour Totals Afternoon	Combined Totals Morning	Combined Totals Afternoon
12:00		4	31			4	41				
12:15		5	45			4	29				
12:30		0	42			0	39				
12:45		1	39	10	157	1	66	9	175	19	332
01:00		1	32			3	31				
01:15		2	37			0	32				
01:30		1	24			1	33				
01:45		1	38	5	131	1	34	5	130	10	261
02:00		0	58			1	26				
02:15		2	70			0	136				
02:30		1	46			1	52				
02:45		2	46	5	220	1	51	3	265	8	485
03:00		0	47			1	50				
03:15		0	56			0	68				
03:30		0	57			0	59				
03:45		0	62	0	222	1	47	2	224	2	446
04:00		1	44			6	65				
04:15		0	41			2	53				
04:30		2	40			4	42				
04:45		2	50	5	175	4	46	16	206	21	381
05:00		2	51			7	60				
05:15		5	49			4	67				
05:30		1	59			11	36				
05:45		4	32	12	191	16	42	38	205	50	396
06:00		12	29			11	45				
06:15		9	32			21	47				
06:30		28	27			35	30				
06:45		39	35	88	123	29	31	96	153	184	276
07:00		85	34			45	30				
07:15		124	37			94	28				
07:30		82	25			119	23				
07:45		40	26	331	122	45	24	303	105	634	227
08:00		31	22			31	18				
08:15		29	20			35	16				
08:30		42	24			29	16				
08:45		24	17	126	83	35	17	130	67	256	150
09:00		27	12			49	15				
09:15		29	14			40	12				
09:30		23	21			37	11				
09:45		20	12	99	59	27	11	153	49	252	108
10:00		17	10			23	12				
10:15		22	4			29	6				
10:30		38	9			31	5				
10:45		25	6	102	29	51	10	134	33	236	62
11:00		24	10			32	7				
11:15		31	6			30	1				
11:30		27	3			35	2				
11:45		30	4	112	23	35	3	132	13	244	36
Total		895	1535			1021	1625			1916	3160
Percent		36.8%	63.2%			38.6%	61.4%			37.7%	62.3%

Accurate Counts
978-664-2565

Location : West Road South of
Location : Crosby Street
City/State: Milford, NH
Counter : 10122

51784002
Site Code: 51784002

Start	17-May-0	SB		Hour Totals		NB		Hour Totals		Combined Totals	
Time	Wed	Morning	Afternoon	Morning	Afternoon	Morning	Afternoon	Morning	Afternoon	Morning	Afternoon
12:00		2	41			4	58				
12:15		3	39			2	48				
12:30		1	33			2	39				
12:45		3	41	9	154	1	48	9	193	18	347
01:00		1	60			2	44				
01:15		0	43			0	67				
01:30		0	43			0	40				
01:45		0	32	1	178	0	48	2	199	3	377
02:00		1	60			2	34				
02:15		2	64			1	150				
02:30		0	45			1	62				
02:45		3	52	6	221	1	59	5	305	11	526
03:00		1	39			3	43				
03:15		3	48			0	61				
03:30		0	51			2	53				
03:45		1	63	5	201	3	80	8	237	13	438
04:00		1	59			2	60				
04:15		0	38			0	46				
04:30		0	50			6	52				
04:45		1	56	2	203	7	50	15	208	17	411
05:00		5	69			5	49				
05:15		3	48			13	68				
05:30		5	40			9	56				
05:45		4	64	17	221	9	56	36	229	53	450
06:00		13	44			19	50				
06:15		8	39			24	35				
06:30		22	46			21	43				
06:45		46	50	89	179	34	48	98	176	187	355
07:00		60	39			20	29				
07:15		42	42			38	30				
07:30		38	44			37	44				
07:45		25	27	165	152	47	27	142	130	307	282
08:00		35	35			23	26				
08:15		22	41			44	31				
08:30		32	28			33	26				
08:45		32	21	121	125	30	20	130	103	251	228
09:00		91	18			54	19				
09:15		88	11			90	9				
09:30		63	13			66	6				
09:45		23	11	265	53	29	9	239	43	504	96
10:00		31	11			36	7				
10:15		28	15			40	9				
10:30		54	5			32	14				
10:45		26	6	139	37	41	1	149	31	288	68
11:00		30	7			34	3				
11:15		33	5			31	4				
11:30		34	3			34	4				
11:45		33	3	130	18	45	1	144	12	274	30
Total		949	1742			977	1866			1926	3608
Percent		35.3%	64.7%			34.4%	65.6%			34.8%	65.2%

Accurate Counts
978-664-2565

Location : West Road South of
Location : Crosby Street
City/State: Milford, NH
Counter : 10122

51784002
Site Code: 51784002

Start Time	18-May-0 Thu	SB Morning	SB Afternoon	Hour Totals Morning	Hour Totals Afternoon	NB Morning	NB Afternoon	Hour Totals Morning	Hour Totals Afternoon	Combined Totals Morning	Combined Totals Afternoon
12:00		1	*			1	*				
12:15		3	*			1	*				
12:30		4	*			3	*				
12:45		1	*	9	0	1	*	6	0	15	0
01:00		0	*			1	*				
01:15		2	*			0	*				
01:30		2	*			0	*				
01:45		2	*	6	0	1	*	2	0	8	0
02:00		4	*			2	*				
02:15		1	*			0	*				
02:30		0	*			1	*				
02:45		0	*	5	0	4	*	7	0	12	0
03:00		2	*			2	*				
03:15		1	*			1	*				
03:30		0	*			0	*				
03:45		0	*	3	0	2	*	5	0	8	0
04:00		1	*			2	*				
04:15		1	*			2	*				
04:30		1	*			1	*				
04:45		2	*	5	0	5	*	10	0	15	0
05:00		2	*			6	*				
05:15		2	*			13	*				
05:30		4	*			11	*				
05:45		7	*	15	0	12	*	42	0	57	0
06:00		18	*			13	*				
06:15		10	*			18	*				
06:30		24	*			31	*				
06:45		45	*	97	0	16	*	78	0	175	0
07:00		74	*			41	*				
07:15		127	*			98	*				
07:30		78	*			125	*				
07:45		38	*	317	0	39	*	303	0	620	0
08:00		26	*			45	*				
08:15		52	*			44	*				
08:30		34	*			29	*				
08:45		28	*	140	0	42	*	160	0	300	0
09:00		34	*			28	*				
09:15		30	*			49	*				
09:30		22	*			36	*				
09:45		43	*	129	0	28	*	141	0	270	0
10:00		*	*	*	*	*	*	*	*	*	*
10:15		*	*	*	*	*	*	*	*	*	*
10:30		*	*	*	*	*	*	*	*	*	*
10:45		*	*	*	*	*	*	*	*	*	*
11:00		*	*	*	*	*	*	*	*	*	*
11:15		*	*	*	*	*	*	*	*	*	*
11:30		*	*	*	*	*	*	*	*	*	*
11:45		*	*	*	*	*	*	*	*	*	*
Total		726	0			754	0			1480	0
Percent		100.0%	0.0%			100.0%	0.0%			100.0%	0.0%
Grand Total		9853	16969			10692	17532			20545	34501
Percent		36.7%	63.3%			37.9%	62.1%			37.3%	62.7%

ADT Not Calculated

Accurate Counts
978-664-2565

Location : West Road South of
Location : Crosby Street
City/State: Milford, NH
Counter : 13735

517840V2
Site Code: 51784002

Start Time	18-May-0 Thu	SB Morning	SB Afternoon	Hour Totals Morning	Hour Totals Afternoon	NB Morning	NB Afternoon	Hour Totals Morning	Hour Totals Afternoon	Combined Totals Morning	Combined Totals Afternoon
12:00		*	26			*	51				
12:15		*	45			*	36				
12:30		*	50			*	45				
12:45		*	42	0	163	*	51	0	183	0	346
01:00		*	30			*	42				
01:15		*	33			*	40				
01:30		*	33			*	33				
01:45		*	37	0	133	*	30	0	145	0	278
02:00		*	58			*	43				
02:15		*	35			*	159				
02:30		*	41			*	78				
02:45		*	61	0	195	*	63	0	343	0	538
03:00		*	56			*	56				
03:15		*	38			*	54				
03:30		*	53			*	62				
03:45		*	55	0	202	*	54	0	226	0	428
04:00		*	52			*	53				
04:15		*	46			*	51				
04:30		*	51			*	74				
04:45		*	61	0	210	*	65	0	243	0	453
05:00		*	67			*	74				
05:15		*	74			*	61				
05:30		*	61			*	53				
05:45		*	51	0	253	*	70	0	258	0	511
06:00		*	56			*	70				
06:15		*	51			*	35				
06:30		*	52			*	54				
06:45		*	65	0	224	*	55	0	214	0	438
07:00		*	42			*	41				
07:15		*	59			*	34				
07:30		*	45			*	39				
07:45		*	44	0	190	*	40	0	154	0	344
08:00		*	42			*	33				
08:15		*	47			*	37				
08:30		*	26			*	30				
08:45		*	35	0	150	*	22	0	122	0	272
09:00		*	34			*	39				
09:15		*	24			*	22				
09:30		*	25			*	11				
09:45		*	21	0	104	*	23	0	95	0	199
10:00		27	15			39	25				
10:15		21	15			27	20				
10:30		34	8			33	12				
10:45		25	7	107	45	47	7	146	64	253	109
11:00		22	11			32	7				
11:15		42	6			44	1				
11:30		34	4			45	2				
11:45		50	5	148	26	37	2	158	12	306	38
Total		255	1895			304	2059			559	3954
Percent		11.9%	88.1%			12.9%	87.1%			12.4%	87.6%

Accurate Counts
978-664-2565

Location : West Road South of
Location : Crosby Street
City/State: Milford, NH
Counter : 13735

517840V2
Site Code: 51784002

Start	19-May-0	SB		Hour Totals		NB		Hour Totals		Combined Totals	
Time	Fri	Morning	Afternoon	Morning	Afternoon	Morning	Afternoon	Morning	Afternoon	Morning	Afternoon
12:00		4	38			1	51				
12:15		5	38			5	36				
12:30		2	47			5	47				
12:45		5	44	16	167	1	65	12	199	28	366
01:00		2	41			0	46				
01:15		5	32			0	31				
01:30		1	37			0	42				
01:45		3	51	11	161	1	29	1	148	12	309
02:00		0	57			1	33				
02:15		1	48			3	150				
02:30		0	55			1	68				
02:45		1	50	2	210	0	62	5	313	7	523
03:00		1	25			1	58				
03:15		0	43			1	51				
03:30		2	35			1	47				
03:45		0	51	3	154	1	52	4	208	7	362
04:00		1	60			2	58				
04:15		0	50			2	59				
04:30		0	49			5	50				
04:45		0	50	1	209	2	59	11	226	12	435
05:00		2	43			12	55				
05:15		7	50			12	45				
05:30		8	51			9	51				
05:45		6	51	23	195	15	49	48	200	71	395
06:00		7	48			14	35				
06:15		13	55			26	43				
06:30		29	35			31	51				
06:45		42	41	91	179	32	30	103	159	194	338
07:00		84	50			41	43				
07:15		100	49			82	27				
07:30		71	34			103	34				
07:45		35	32	290	165	55	33	281	137	571	302
08:00		35	40			35	21				
08:15		45	41			42	24				
08:30		28	25			35	23				
08:45		36	19	144	125	35	18	147	86	291	211
09:00		50	27			37	23				
09:15		20	25			41	46				
09:30		24	18			31	24				
09:45		20	17	114	87	37	23	146	116	260	203
10:00		24	25			33	20				
10:15		26	15			24	16				
10:30		31	14			22	12				
10:45		13	11	94	65	55	7	134	55	228	120
11:00		40	17			42	8				
11:15		31	11			26	11				
11:30		40	5			40	10				
11:45		28	15	139	48	26	7	134	36	273	84
Total		928	1765			1026	1883			1954	3648
Percent		34.5%	65.5%			35.3%	64.7%			34.9%	65.1%

Accurate Counts
978-664-2565

Location : West Road South of
Location : Crosby Street
City/State: Milford, NH
Counter : 13735

517840V2
Site Code: 51784002

Start	20-May-0	SB		Hour Totals		NB		Hour Totals		Combined Totals	
Time	Sat	Morning	Afternoon	Morning	Afternoon	Morning	Afternoon	Morning	Afternoon	Morning	Afternoon
12:00		14	53			9	42				
12:15		3	36			4	51				
12:30		2	42			4	51				
12:45		7	42	26	173	2	43	19	187	45	360
01:00		6	52			2	44				
01:15		14	39			0	36				
01:30		0	44			2	43				
01:45		4	42	24	177	2	33	6	156	30	333
02:00		1	33			2	33				
02:15		4	34			0	31				
02:30		3	42			3	37				
02:45		0	39	8	148	2	33	7	134	15	282
03:00		3	40			1	33				
03:15		0	43			0	43				
03:30		0	48			0	52				
03:45		1	33	4	164	2	45	3	173	7	337
04:00		3	34			3	34				
04:15		1	34			1	46				
04:30		3	31			3	40				
04:45		0	40	7	139	4	27	11	147	18	286
05:00		1	40			7	38				
05:15		2	34			5	40				
05:30		3	39			4	25				
05:45		1	42	7	155	7	29	23	132	30	287
06:00		7	34			5	34				
06:15		2	41			14	20				
06:30		9	37			12	28				
06:45		14	31	32	143	13	30	44	112	76	255
07:00		13	29			8	56				
07:15		22	29			23	42				
07:30		26	27			24	22				
07:45		25	26	86	111	41	24	96	144	182	255
08:00		31	27			35	14				
08:15		29	18			42	22				
08:30		25	14			38	17				
08:45		39	19	124	78	40	12	155	65	279	143
09:00		37	17			59	14				
09:15		42	17			48	11				
09:30		52	10			44	15				
09:45		43	10	174	54	29	18	180	58	354	112
10:00		50	18			50	15				
10:15		38	13			46	11				
10:30		42	13			43	8				
10:45		41	8	171	52	51	11	190	45	361	97
11:00		39	9			43	11				
11:15		50	12			33	3				
11:30		63	9			64	7				
11:45		62	10	214	40	55	5	195	26	409	66
Total		877	1434			929	1379			1806	2813
Percent		37.9%	62.1%			40.3%	59.7%			39.1%	60.9%

Accurate Counts
978-664-2565

Location : West Road South of
Location : Crosby Street
City/State: Milford, NH
Counter : 13735

517840V2
Site Code: 51784002

Start Time	21-May-0 Sun	SB Morning	SB Afternoon	Hour Totals Morning	Hour Totals Afternoon	NB Morning	NB Afternoon	Hour Totals Morning	Hour Totals Afternoon	Combined Totals Morning	Combined Totals Afternoon
12:00		3	28			2	51				
12:15		6	25			3	55				
12:30		8	32			2	34				
12:45		4	34	21	119	4	33	11	173	32	292
01:00		5	37			3	33				
01:15		12	38			3	37				
01:30		5	45			4	35				
01:45		1	41	23	161	1	25	11	130	34	291
02:00		5	30			4	33				
02:15		4	46			3	48				
02:30		3	31			1	36				
02:45		1	41	13	148	1	27	9	144	22	292
03:00		0	28			0	30				
03:15		0	43			1	37				
03:30		0	33			5	37				
03:45		1	33	1	137	0	22	6	126	7	263
04:00		0	29			1	25				
04:15		4	27			2	28				
04:30		1	21			3	31				
04:45		0	23	5	100	0	34	6	118	11	218
05:00		0	26			0	28				
05:15		2	38			6	23				
05:30		4	39			6	29				
05:45		3	29	9	132	8	28	20	108	29	240
06:00		1	38			2	22				
06:15		4	24			4	25				
06:30		3	29			6	17				
06:45		5	19	13	110	7	18	19	82	32	192
07:00		5	19			5	32				
07:15		8	22			15	41				
07:30		8	24			9	18				
07:45		8	20	29	85	15	21	44	112	73	197
08:00		8	25			13	20				
08:15		15	24			15	19				
08:30		17	16			27	19				
08:45		21	21	61	86	15	17	70	75	131	161
09:00		26	10			30	7				
09:15		30	10			32	6				
09:30		30	4			31	10				
09:45		35	8	121	32	31	11	124	34	245	66
10:00		26	12			28	8				
10:15		26	4			25	9				
10:30		50	7			27	1				
10:45		36	9	138	32	33	4	113	22	251	54
11:00		24	3			28	4				
11:15		35	5			37	3				
11:30		37	9			43	4				
11:45		34	5	130	22	36	5	144	16	274	38
Total		564	1164			577	1140			1141	2304
Percent		32.6%	67.4%			33.6%	66.4%			33.1%	66.9%

Accurate Counts
978-664-2565

Location : West Road South of
Location : Crosby Street
City/State: Milford, NH
Counter : 13735

517840V2
Site Code: 51784002

Start Time	22-May-0 Mon	SB Morning	SB Afternoon	Hour Totals Morning	Hour Totals Afternoon	NB Morning	NB Afternoon	Hour Totals Morning	Hour Totals Afternoon	Combined Totals Morning	Combined Totals Afternoon
12:00		2	26			2	40				
12:15		1	38			2	40				
12:30		2	52			1	32				
12:45		3	41	8	157	2	54	7	166	15	323
01:00		0	21			1	43				
01:15		1	29			0	33				
01:30		2	45			5	20				
01:45		1	40	4	135	0	24	6	120	10	255
02:00		0	47			0	36				
02:15		0	36			2	121				
02:30		1	34			0	74				
02:45		0	46	1	163	2	58	4	289	5	452
03:00		2	44			1	63				
03:15		0	39			3	40				
03:30		1	49			0	45				
03:45		0	63	3	195	2	53	6	201	9	396
04:00		2	56			6	72				
04:15		0	48			2	39				
04:30		2	54			5	44				
04:45		2	51	6	209	1	45	14	200	20	409
05:00		3	51			8	52				
05:15		2	55			12	60				
05:30		4	60			13	54				
05:45		9	45	18	211	12	55	45	221	63	432
06:00		11	39			17	57				
06:15		10	47			22	22				
06:30		25	39			33	33				
06:45		34	38	80	163	25	35	97	147	177	310
07:00		87	51			30	39				
07:15		108	37			84	27				
07:30		73	36			96	26				
07:45		32	21	300	145	45	26	255	118	555	263
08:00		27	38			23	32				
08:15		31	24			40	24				
08:30		33	22			39	14				
08:45		29	20	120	104	38	14	140	84	260	188
09:00		27	13			27	22				
09:15		28	19			38	22				
09:30		21	15			30	15				
09:45		17	12	93	59	28	6	123	65	216	124
10:00		21	12			30	11				
10:15		19	10			24	4				
10:30		33	6			20	2				
10:45		27	4	100	32	41	8	115	25	215	57
11:00		45	9			29	3				
11:15		28	8			35	6				
11:30		34	8			35	4				
11:45		35	0	142	25	31	2	130	15	272	40
Total		875	1598			942	1651			1817	3249
Percent		35.4%	64.6%			36.3%	63.7%			35.9%	64.1%

Accurate Counts
978-664-2565

Location : West Road South of
Location : Crosby Street
City/State: Milford, NH
Counter : 13735

517840V2
Site Code: 51784002

Start Time	23-May-0 Tue	SB Morning	SB Afternoon	Hour Totals Morning	Hour Totals Afternoon	NB Morning	NB Afternoon	Hour Totals Morning	Hour Totals Afternoon	Combined Totals Morning	Combined Totals Afternoon
12:00		3	26			0	45				
12:15		1	34			3	43				
12:30		1	39			5	26				
12:45		2	26	7	125	2	51	10	165	17	290
01:00		2	35			0	25				
01:15		0	29			1	28				
01:30		2	28			1	23				
01:45		0	33	4	125	1	37	3	113	7	238
02:00		1	58			0	39				
02:15		1	45			1	136				
02:30		1	55			4	64				
02:45		2	47	5	205	1	53	6	292	11	497
03:00		0	35			1	55				
03:15		1	45			1	43				
03:30		1	42			1	51				
03:45		0	49	2	171	2	68	5	217	7	388
04:00		3	51			4	80				
04:15		1	64			2	60				
04:30		0	63			6	54				
04:45		4	50	8	228	5	60	17	254	25	482
05:00		1	55			6	63				
05:15		2	50			11	59				
05:30		3	56			10	48				
05:45		10	53	16	214	11	52	38	222	54	436
06:00		13	38			18	58				
06:15		13	54			22	38				
06:30		25	50			36	36				
06:45		45	50	96	192	22	34	98	166	194	358
07:00		69	34			45	58				
07:15		115	37			68	28				
07:30		73	39			100	33				
07:45		34	43	291	153	43	21	256	140	547	293
08:00		35	32			35	21				
08:15		28	21			47	51				
08:30		26	31			34	27				
08:45		33	25	122	109	39	14	155	113	277	222
09:00		34	21			34	19				
09:15		28	14			31	12				
09:30		22	13			36	13				
09:45		27	16	111	64	26	7	127	51	238	115
10:00		15	7			22	13				
10:15		23	12			34	8				
10:30		25	10			19	6				
10:45		28	10	91	39	34	5	109	32	200	71
11:00		26	11			33	5				
11:15		23	8			28	5				
11:30		29	4			27	5				
11:45		29	2	107	25	33	4	121	19	228	44
Total		860	1650			945	1784			1805	3434
Percent		34.3%	65.7%			34.6%	65.4%			34.5%	65.5%

Accurate Counts
978-664-2565

Location : West Road South of
Location : Crosby Street
City/State: Milford, NH
Counter : 13735

517840V2
Site Code: 51784002

Start	24-May-0	SB		Hour Totals		NB		Hour Totals		Combined Totals	
Time	Wed	Morning	Afternoon	Morning	Afternoon	Morning	Afternoon	Morning	Afternoon	Morning	Afternoon
12:00		4	41			2	52				
12:15		2	33			3	34				
12:30		3	44			2	49				
12:45		3	34	12	152	3	61	10	196	22	348
01:00		2	34			1	45				
01:15		1	34			1	40				
01:30		0	36			0	30				
01:45		1	41	4	145	2	31	4	146	8	291
02:00		1	53			1	33				
02:15		0	54			0	109				
02:30		2	41			2	59				
02:45		1	42	4	190	0	54	3	255	7	445
03:00		1	44			2	63				
03:15		0	38			1	52				
03:30		0	42			3	60				
03:45		0	61	1	185	3	56	9	231	10	416
04:00		3	48			2	62				
04:15		5	53			5	57				
04:30		0	53			6	60				
04:45		0	45	8	199	6	46	19	225	27	424
05:00		3	45			10	57				
05:15		3	52			9	64				
05:30		2	71			13	43				
05:45		10	60	18	228	8	56	40	220	58	448
06:00		12	55			16	52				
06:15		8	47			17	53				
06:30		17	43			29	33				
06:45		45	52	82	197	35	47	97	185	179	382
07:00		79	47			42	28				
07:15		101	32			80	32				
07:30		72	40			91	42				
07:45		38	45	290	164	37	47	250	149	540	313
08:00		25	39			28	43				
08:15		31	36			39	16				
08:30		40	23			39	26				
08:45		34	33	130	131	31	38	137	123	267	254
09:00		26	18			33	16				
09:15		31	25			41	13				
09:30		18	15			39	15				
09:45		20	9	95	67	27	7	140	51	235	118
10:00		35	10			25	11				
10:15		21	10			22	9				
10:30		28	13			28	11				
10:45		28	9	112	42	36	10	111	41	223	83
11:00		30	16			34	9				
11:15		23	9			38	4				
11:30		32	4			43	3				
11:45		44	5	129	34	28	3	143	19	272	53
Total		885	1734			963	1841			1848	3575
Percent		33.8%	66.2%			34.3%	65.7%			34.1%	65.9%

Accurate Counts
978-664-2565

Location : West Road South of
Location : Crosby Street
City/State: Milford, NH
Counter : 13735

517840V2
Site Code: 51784002

Start Time	25-May-0 Thu	SB Morning	SB Afternoon	Hour Totals Morning	Hour Totals Afternoon	NB Morning	NB Afternoon	Hour Totals Morning	Hour Totals Afternoon	Combined Totals Morning	Combined Totals Afternoon
12:00		2	31			2	41				
12:15		4	41			2	39				
12:30		1	43			0	40				
12:45		5	46	12	161	2	64	6	184	18	345
01:00		1	30			1	30				
01:15		0	33			0	49				
01:30		0	34			1	30				
01:45		1	43	2	140	2	34	4	143	6	283
02:00		2	50			1	37				
02:15		2	50			1	124				
02:30		1	36			0	75				
02:45		0	52	5	188	2	52	4	288	9	476
03:00		1	51			1	65				
03:15		0	52			0	53				
03:30		0	63			1	53				
03:45		2	54	3	220	1	59	3	230	6	450
04:00		2	48			3	55				
04:15		0	50			2	53				
04:30		1	55			3	72				
04:45		1	48	4	201	5	75	13	255	17	456
05:00		2	73			9	61				
05:15		4	58			15	67				
05:30		6	57			11	84				
05:45		9	59	21	247	16	73	51	285	72	532
06:00		14	71			15	66				
06:15		14	71			21	42				
06:30		25	52			27	56				
06:45		48	71	101	265	23	36	86	200	187	465
07:00		74	64			40	54				
07:15		112	51			93	55				
07:30		86	38			102	37				
07:45		35	35	307	188	43	27	278	173	585	361
08:00		35	43			30	38				
08:15		30	37			43	30				
08:30		31	23			21	42				
08:45		34	31	130	134	33	30	127	140	257	274
09:00		40	30			33	68				
09:15		28	22			41	38				
09:30		21	18			25	33				
09:45		30	15	119	85	35	10	134	149	253	234
10:00		35	16			31	10				
10:15		29	15			25	8				
10:30		28	9			27	18				
10:45		29	10	121	50	46	11	129	47	250	97
11:00		25	18			33	6				
11:15		33	9			32	4				
11:30		33	7			54	4				
11:45		40	7	131	41	47	7	166	21	297	62
Total		956	1920			1001	2115			1957	4035
Percent		33.2%	66.8%			32.1%	67.9%			32.7%	67.3%

Accurate Counts
978-664-2565

Location : West Road South of
Location : Crosby Street
City/State: Milford, NH
Counter : 13735

517840V2
Site Code: 51784002

Start	26-May-0	SB		Hour Totals		NB		Hour Totals		Combined Totals	
Time	Fri	Morning	Afternoon	Morning	Afternoon	Morning	Afternoon	Morning	Afternoon	Morning	Afternoon
12:00		4	47			6	47				
12:15		7	47			4	36				
12:30		2	36			3	32				
12:45		3	42	16	172	7	37	20	152	36	324
01:00		0	53			1	65				
01:15		3	42			2	35				
01:30		2	32			0	42				
01:45		1	42	6	169	1	46	4	188	10	357
02:00		3	66			3	56				
02:15		0	44			2	115				
02:30		1	42			0	59				
02:45		3	51	7	203	0	49	5	279	12	482
03:00		0	50			2	48				
03:15		1	54			1	47				
03:30		1	50			5	55				
03:45		2	54	4	208	5	58	13	208	17	416
04:00		4	62			2	57				
04:15		0	47			2	68				
04:30		1	47			5	65				
04:45		1	41	6	197	6	49	15	239	21	436
05:00		2	62			8	45				
05:15		3	59			7	52				
05:30		4	43			11	51				
05:45		5	55	14	219	15	44	41	192	55	411
06:00		15	39			15	37				
06:15		9	47			25	46				
06:30		20	39			25	37				
06:45		43	31	87	156	30	28	95	148	182	304
07:00		68	34			41	33				
07:15		124	25			79	22				
07:30		80	37			89	28				
07:45		29	27	301	123	43	22	252	105	553	228
08:00		27	25			24	19				
08:15		36	21			31	22				
08:30		34	19			35	19				
08:45		46	19	143	84	47	29	137	89	280	173
09:00		32	22			26	26				
09:15		22	23			28	21				
09:30		26	19			26	6				
09:45		33	13	113	77	37	30	117	83	230	160
10:00		31	15			46	7				
10:15		33	15			25	11				
10:30		31	10			36	12				
10:45		18	14	113	54	42	4	149	34	262	88
11:00		38	13			50	7				
11:15		32	13			44	11				
11:30		40	10			37	6				
11:45		32	9	142	45	37	7	168	31	310	76
Total		952	1707			1016	1748			1968	3455
Percent		35.8%	64.2%			36.8%	63.2%			36.3%	63.7%

Accurate Counts
978-664-2565

Location : West Road South of
Location : Crosby Street
City/State: Milford, NH
Counter : 13735

517840V2
Site Code: 51784002

Start Time	27-May-0 Sat	SB Morning	SB Afternoon	Hour Totals Morning	Hour Totals Afternoon	NB Morning	NB Afternoon	Hour Totals Morning	Hour Totals Afternoon	Combined Totals Morning	Combined Totals Afternoon
12:00		6	38			4	35				
12:15		8	39			6	38				
12:30		2	32			3	27				
12:45		2	26	18	135	3	27	16	127	34	262
01:00		3	51			2	39				
01:15		4	31			2	40				
01:30		4	46			3	38				
01:45		1	38	12	166	5	40	12	157	24	323
02:00		2	37			2	30				
02:15		1	32			2	36				
02:30		1	35			1	25				
02:45		3	43	7	147	2	35	7	126	14	273
03:00		0	33			3	30				
03:15		0	34			1	33				
03:30		0	32			0	37				
03:45		3	25	3	124	2	30	6	130	9	254
04:00		1	34			1	37				
04:15		1	40			3	30				
04:30		0	27			2	25				
04:45		1	34	3	135	3	33	9	125	12	260
05:00		4	39			3	30				
05:15		2	33			6	18				
05:30		13	32			7	41				
05:45		5	35	24	139	7	24	23	113	47	252
06:00		7	29			4	23				
06:15		7	32			11	33				
06:30		5	32			18	23				
06:45		10	38	29	131	10	18	43	97	72	228
07:00		12	13			12	25				
07:15		17	28			19	28				
07:30		17	26			21	12				
07:45		30	16	76	83	29	21	81	86	157	169
08:00		17	21			24	27				
08:15		20	27			22	28				
08:30		16	17			29	20				
08:45		31	27	84	92	34	15	109	90	193	182
09:00		28	30			45	13				
09:15		42	15			28	14				
09:30		30	15			45	18				
09:45		29	18	129	78	36	12	154	57	283	135
10:00		39	12			47	14				
10:15		43	27			45	16				
10:30		33	16			42	21				
10:45		53	10	168	65	48	13	182	64	350	129
11:00		38	12			44	9				
11:15		39	14			53	9				
11:30		39	8			34	11				
11:45		51	11	167	45	45	8	176	37	343	82
Total		720	1340			818	1209			1538	2549
Percent		35.0%	65.0%			40.4%	59.6%			37.6%	62.4%

Accurate Counts
978-664-2565

Location : West Road South of
Location : Crosby Street
City/State: Milford, NH
Counter : 13735

517840V2
Site Code: 51784002

Start Time	28-May-0 Sun	SB Morning	SB Afternoon	Hour Totals Morning	Hour Totals Afternoon	NB Morning	NB Afternoon	Hour Totals Morning	Hour Totals Afternoon	Combined Totals Morning	Combined Totals Afternoon
12:00		9	26			5	34				
12:15		10	34			2	41				
12:30		3	24			4	47				
12:45		7	29	29	113	4	33	15	155	44	268
01:00		6	33			3	46				
01:15		2	23			1	24				
01:30		7	25			2	25				
01:45		1	18	16	99	5	25	11	120	27	219
02:00		3	26			0	28				
02:15		2	28			1	21				
02:30		0	21			1	23				
02:45		1	32	6	107	2	18	4	90	10	197
03:00		1	31			1	21				
03:15		2	23			0	25				
03:30		0	25			2	23				
03:45		0	29	3	108	1	26	4	95	7	203
04:00		1	31			1	15				
04:15		0	26			0	23				
04:30		4	20			5	19				
04:45		1	19	6	96	1	14	7	71	13	167
05:00		0	26			2	23				
05:15		4	19			7	21				
05:30		2	39			4	22				
05:45		2	22	8	106	5	23	18	89	26	195
06:00		1	20			0	20				
06:15		3	21			12	22				
06:30		12	14			7	20				
06:45		3	23	19	78	6	33	25	95	44	173
07:00		11	32			17	28				
07:15		16	28			15	17				
07:30		14	27			12	25				
07:45		11	16	52	103	18	20	62	90	114	193
08:00		11	24			11	24				
08:15		16	19			17	19				
08:30		16	16			11	8				
08:45		17	16	60	75	20	17	59	68	119	143
09:00		24	14			30	16				
09:15		26	19			14	11				
09:30		17	19			27	8				
09:45		27	9	94	61	43	8	114	43	208	104
10:00		31	12			27	10				
10:15		30	9			30	6				
10:30		37	9			29	15				
10:45		27	7	125	37	31	3	117	34	242	71
11:00		27	11			31	8				
11:15		26	14			33	10				
11:30		30	12			30	9				
11:45		30	9	113	46	32	5	126	32	239	78
Total		531	1029			562	982			1093	2011
Percent		34.0%	66.0%			36.4%	63.6%			35.2%	64.8%

Accurate Counts
978-664-2565

Location : West Road South of
Location : Crosby Street
City/State: Milford, NH
Counter : 13735

517840V2
Site Code: 51784002

Start Time	29-May-0 Mon	SB Morning	SB Afternoon	Hour Totals Morning	Hour Totals Afternoon	NB Morning	NB Afternoon	Hour Totals Morning	Hour Totals Afternoon	Combined Totals Morning	Combined Totals Afternoon
12:00		6	44			6	28				
12:15		4	42			7	60				
12:30		3	26			4	27				
12:45		4	30	17	142	3	34	20	149	37	291
01:00		4	34			3	23				
01:15		1	23			6	26				
01:30		4	25			1	35				
01:45		2	23	11	105	2	27	12	111	23	216
02:00		1	19			1	19				
02:15		1	24			2	20				
02:30		0	20			1	21				
02:45		1	30	3	93	0	25	4	85	7	178
03:00		2	23			0	27				
03:15		2	35			3	28				
03:30		1	31			1	19				
03:45		0	31	5	120	0	30	4	104	9	224
04:00		2	20			2	22				
04:15		2	42			0	20				
04:30		2	20			3	21				
04:45		0	22	6	104	0	26	5	89	11	193
05:00		3	20			7	24				
05:15		2	23			4	26				
05:30		0	33			3	24				
05:45		2	22	7	98	5	25	19	99	26	197
06:00		3	35			7	25				
06:15		2	29			5	28				
06:30		2	20			6	27				
06:45		6	31	13	115	8	31	26	111	39	226
07:00		3	27			9	23				
07:15		9	31			10	32				
07:30		9	25			8	16				
07:45		7	25	28	108	13	27	40	98	68	206
08:00		11	22			15	21				
08:15		6	23			15	21				
08:30		12	25			14	18				
08:45		22	17	51	87	17	15	61	75	112	162
09:00		27	14			34	15				
09:15		28	11			23	13				
09:30		29	17			27	17				
09:45		33	12	117	54	33	5	117	50	234	104
10:00		24	18			21	3				
10:15		25	3			1	5				
10:30		50	7			8	6				
10:45		71	2	170	30	32	4	62	18	232	48
11:00		62	7			11	4				
11:15		62	5			32	6				
11:30		50	4			44	4				
11:45		34	2	208	18	36	0	123	14	331	32
Total		636	1074			493	1003			1129	2077
Percent		37.2%	62.8%			33.0%	67.0%			35.2%	64.8%

Accurate Counts
978-664-2565

Location : West Road South of
Location : Crosby Street
City/State: Milford, NH
Counter : 13735

517840V2
Site Code: 51784002

Start Time	30-May-0 Tue	SB Morning	SB Afternoon	Hour Totals Morning	Hour Totals Afternoon	NB Morning	NB Afternoon	Hour Totals Morning	Hour Totals Afternoon	Combined Totals Morning	Combined Totals Afternoon
12:00		2	32			2	54				
12:15		2	42			1	34				
12:30		2	46			1	40				
12:45		2	38	8	158	0	41	4	169	12	327
01:00		1	43			1	28				
01:15		0	38			0	32				
01:30		2	24			2	18				
01:45		1	40	4	145	0	38	3	116	7	261
02:00		1	55			0	36				
02:15		4	41			3	129				
02:30		0	50			0	66				
02:45		1	38	6	184	1	42	4	273	10	457
03:00		1	42			3	60				
03:15		0	47			0	53				
03:30		0	40			1	51				
03:45		0	50	1	179	1	48	5	212	6	391
04:00		1	51			5	50				
04:15		2	57			1	47				
04:30		1	44			3	44				
04:45		1	43	5	195	5	54	14	195	19	390
05:00		3	57			9	39				
05:15		1	50			16	51				
05:30		6	43			12	47				
05:45		7	44	17	194	14	40	51	177	68	371
06:00		12	51			22	51				
06:15		3	41			23	32				
06:30		18	36			33	35				
06:45		45	27	78	155	30	38	108	156	186	311
07:00		75	28			46	32				
07:15		97	33			76	31				
07:30		77	40			106	31				
07:45		37	27	286	128	40	37	268	131	554	259
08:00		32	32			28	22				
08:15		31	22			39	18				
08:30		38	38			26	26				
08:45		28	26	129	118	31	20	124	86	253	204
09:00		37	19			34	9				
09:15		25	17			43	12				
09:30		30	14			29	13				
09:45		19	12	111	62	25	14	131	48	242	110
10:00		17	13			22	7				
10:15		25	5			27	5				
10:30		29	10			25	8				
10:45		28	5	99	33	36	7	110	27	209	60
11:00		32	7			37	5				
11:15		35	11			27	2				
11:30		30	8			51	3				
11:45		40	9	137	35	22	3	137	13	274	48
Total		881	1586			959	1603			1840	3189
Percent		35.7%	64.3%			37.4%	62.6%			36.6%	63.4%

Accurate Counts
978-664-2565

Location : West Road South of
Location : Crosby Street
City/State: Milford, NH
Counter : 13735

517840V2
Site Code: 51784002

Start Time	31-May-0 Wed	SB Morning	SB Afternoon	Hour Totals Morning	Hour Totals Afternoon	NB Morning	NB Afternoon	Hour Totals Morning	Hour Totals Afternoon	Combined Totals Morning	Combined Totals Afternoon
12:00		4	40			0	40				
12:15		2	33			2	38				
12:30		3	39			1	33				
12:45		3	42	12	154	3	61	6	172	18	326
01:00		1	35			2	42				
01:15		0	31			0	40				
01:30		0	32			1	27				
01:45		1	31	2	129	0	40	3	149	5	278
02:00		0	52			0	37				
02:15		0	35			0	132				
02:30		2	58			0	99				
02:45		0	36	2	181	1	63	1	331	3	512
03:00		0	55			1	63				
03:15		0	61			0	50				
03:30		1	52			4	58				
03:45		1	69	2	237	5	67	10	238	12	475
04:00		2	55			3	57				
04:15		0	38			4	45				
04:30		3	54			2	48				
04:45		0	45	5	192	5	58	14	208	19	400
05:00		1	52			6	55				
05:15		3	59			12	58				
05:30		6	63			11	52				
05:45		10	63	20	237	11	49	40	214	60	451
06:00		14	56			14	44				
06:15		13	51			19	56				
06:30		19	54			38	48				
06:45		38	72	84	233	35	47	106	195	190	428
07:00		83	47			37	38				
07:15		102	46			89	49				
07:30		91	40			92	40				
07:45		34	41	310	174	48	37	266	164	576	338
08:00		35	36			39	49				
08:15		37	41			39	46				
08:30		37	29			34	21				
08:45		26	26	135	132	31	30	143	146	278	278
09:00		36	41			30	78				
09:15		25	30			50	26				
09:30		23	19			34	24				
09:45		25	18	109	108	30	9	144	137	253	245
10:00		17	14			22	11				
10:15		19	13			24	11				
10:30		27	9			23	8				
10:45		23	6	86	42	30	4	99	34	185	76
11:00		26	11			29	11				
11:15		25	7			30	6				
11:30		31	9			31	6				
11:45		35	5	117	32	29	0	119	23	236	55
Total		884	1851			951	2011			1835	3862
Percent		32.3%	67.7%			32.1%	67.9%			32.2%	67.8%

Accurate Counts
978-664-2565

Location : West Road South of
Location : Crosby Street
City/State: Milford, NH
Counter : 13735

517840V2
Site Code: 51784002

Start Time	01-Jun-06 Thu	SB Morning	SB Afternoon	Hour Totals Morning	Hour Totals Afternoon	NB Morning	NB Afternoon	Hour Totals Morning	Hour Totals Afternoon	Combined Totals Morning	Combined Totals Afternoon
12:00		5	36			5	51				
12:15		5	33			2	34				
12:30		0	46			1	44				
12:45		2	30	12	145	0	51	8	180	20	325
01:00		3	35			2	30				
01:15		2	30			2	26				
01:30		2	31			2	28				
01:45		1	40	8	136	0	36	6	120	14	256
02:00		2	48			0	32				
02:15		1	37			1	139				
02:30		1	61			2	69				
02:45		0	42	4	188	0	66	3	306	7	494
03:00		0	40			2	51				
03:15		0	53			0	54				
03:30		0	46			1	44				
03:45		0	51	0	190	2	61	5	210	5	400
04:00		0	57			3	62				
04:15		1	42			2	47				
04:30		3	55			2	55				
04:45		1	46	5	200	6	54	13	218	18	418
05:00		3	59			6	53				
05:15		1	49			13	70				
05:30		9	51			13	48				
05:45		10	49	23	208	13	43	45	214	68	422
06:00		14	37			24	31				
06:15		17	85			22	55				
06:30		15	85			27	43				
06:45		54	65	100	272	24	48	97	177	197	449
07:00		79	72			43	56				
07:15		116	41			88	30				
07:30		87	42			103	21				
07:45		32	33	314	188	34	48	268	155	582	343
08:00		26	31			36	26				
08:15		25	40			37	0				
08:30		32	117			31	2				
08:45		42	71	125	259	24	3	128	31	253	290
09:00		56	49			31	1				
09:15		39	28			58	2				
09:30		24	24			28	0				
09:45		28	33	147	134	35	0	152	3	299	137
10:00		22	17			30	0				
10:15		26	16			25	0				
10:30		26	14			70	0				
10:45		25	9	99	56	50	0	175	0	274	56
11:00		32	9			37	0				
11:15		32	15			27	0				
11:30		39	13			57	0				
11:45		39	3	142	40	30	0	151	0	293	40
Total		979	2016			1051	1614			2030	3630
Percent		32.7%	67.3%			39.4%	60.6%			35.9%	64.1%

Accurate Counts
978-664-2565

Location : West Road South of
Location : Crosby Street
City/State: Milford, NH
Counter : 13735

517840V2
Site Code: 51784002

Start	02-Jun-06	SB		Hour Totals		NB		Hour Totals		Combined Totals	
Time	Fri	Morning	Afternoon	Morning	Afternoon	Morning	Afternoon	Morning	Afternoon	Morning	Afternoon
12:00		6	71			0	0				
12:15		7	72			0	0				
12:30		2	84			0	0				
12:45		1	72	16	299	0	0	0	0	16	299
01:00		5	58			0	0				
01:15		2	71			0	0				
01:30		3	56			0	0				
01:45		0	72	10	257	0	0	0	0	10	257
02:00		3	77			0	0				
02:15		3	152			0	0				
02:30		1	109			0	0				
02:45		2	82	9	420	0	0	0	0	9	420
03:00		1	79			0	1				
03:15		1	98			0	0				
03:30		2	83			0	0				
03:45		0	99	4	359	0	0	0	1	4	360
04:00		2	95			0	2				
04:15		2	85			0	0				
04:30		3	76			0	0				
04:45		5	93	12	349	0	1	0	3	12	352
05:00		14	91			0	1				
05:15		9	79			0	0				
05:30		11	61			0	0				
05:45		17	79	51	310	0	0	0	1	51	311
06:00		18	78			0	0				
06:15		31	77			0	1				
06:30		52	58			0	0				
06:45		70	53	171	266	0	0	0	1	171	267
07:00		99	58			0	0				
07:15		159	65			0	0				
07:30		151	51			0	0				
07:45		72	42	481	216	0	0	0	0	481	216
08:00		67	43			0	0				
08:15		76	56			0	0				
08:30		44	36			0	0				
08:45		62	44	249	179	0	0	0	0	249	179
09:00		57	29			0	0				
09:15		79	34			0	0				
09:30		57	26			0	0				
09:45		48	14	241	103	0	0	0	0	241	103
10:00		52	31			0	0				
10:15		44	18			0	0				
10:30		49	24			0	0				
10:45		70	16	215	89	0	0	0	0	215	89
11:00		77	21			0	0				
11:15		59	16			0	0				
11:30		66	17			0	0				
11:45		84	13	286	67	0	0	0	0	286	67
Total		1745	2914			0	6			1745	2920
Percent		37.5%	62.5%			0.0%	100.0%			37.4%	62.6%

Accurate Counts
978-664-2565

Location : West Road South of
Location : Crosby Street
City/State: Milford, NH
Counter : 13735

517840V2
Site Code: 51784002

Start Time	03-Jun-06 Sat	SB Morning	SB Afternoon	Hour Totals Morning	Hour Totals Afternoon	NB Morning	NB Afternoon	Hour Totals Morning	Hour Totals Afternoon	Combined Totals Morning	Combined Totals Afternoon
12:00		11	71			0	0				
12:15		8	77			0	0				
12:30		9	65			0	0				
12:45		3	71	31	284	0	0	0	0	31	284
01:00		5	56			0	0				
01:15		2	64			0	0				
01:30		7	49			0	0				
01:45		3	52	17	221	0	0	0	0	17	221
02:00		3	41			0	0				
02:15		6	49			0	0				
02:30		3	57			0	0				
02:45		3	47	15	194	0	0	0	0	15	194
03:00		0	47			0	0				
03:15		3	60			0	0				
03:30		1	40			0	0				
03:45		2	52	6	199	0	0	0	0	6	199
04:00		5	48			0	0				
04:15		2	59			0	0				
04:30		0	44			0	0				
04:45		3	52	10	203	0	0	0	0	10	203
05:00		3	40			0	0				
05:15		7	42			0	0				
05:30		10	38			0	0				
05:45		5	54	25	174	0	0	0	0	25	174
06:00		6	43			0	0				
06:15		16	42			0	0				
06:30		16	49			0	0				
06:45		18	51	56	185	0	0	0	0	56	185
07:00		15	44			0	0				
07:15		16	57			0	0				
07:30		23	41			0	0				
07:45		40	43	94	185	0	0	0	0	94	185
08:00		33	32			0	0				
08:15		36	35			0	0				
08:30		53	24			0	0				
08:45		44	26	166	117	0	0	0	0	166	117
09:00		54	32			0	0				
09:15		48	32			0	0				
09:30		57	21			0	0				
09:45		49	24	208	109	0	0	0	0	208	109
10:00		58	28			0	0				
10:15		57	23			0	0				
10:30		41	21			0	0				
10:45		58	15	214	87	0	0	0	0	214	87
11:00		47	15			1	0				
11:15		48	16			0	0				
11:30		56	10			0	0				
11:45		82	13	233	54	0	0	1	0	234	54
Total		1075	2012			1	0			1076	2012
Percent		34.8%	65.2%			100.0%	0.0%			34.8%	65.2%

Accurate Counts
978-664-2565

Location : West Road South of
Location : Crosby Street
City/State: Milford, NH
Counter : 13735

517840V2
Site Code: 51784002

Start Time	04-Jun-06 Sun	SB Morning	SB Afternoon	Hour Totals Morning	Hour Totals Afternoon	NB Morning	NB Afternoon	Hour Totals Morning	Hour Totals Afternoon	Combined Totals Morning	Combined Totals Afternoon
12:00		9	47			0	0				
12:15		8	73			0	0				
12:30		10	73			0	0				
12:45		5	64	32	257	0	0	0	0	32	257
01:00		9	58			0	0				
01:15		9	46			0	0				
01:30		0	61			0	0				
01:45		8	58	26	223	0	0	0	0	26	223
02:00		3	56			0	0				
02:15		1	51			0	0				
02:30		2	43			0	0				
02:45		1	53	7	203	0	0	0	0	7	203
03:00		2	52			0	0				
03:15		1	54			0	0				
03:30		1	54			0	0				
03:45		2	53	6	213	0	0	0	0	6	213
04:00		2	53			0	0				
04:15		3	40			0	0				
04:30		2	46			0	0				
04:45		3	54	10	193	0	0	0	0	10	193
05:00		6	49			0	0				
05:15		6	49			0	0				
05:30		8	54			0	0				
05:45		9	68	29	220	0	0	0	0	29	220
06:00		9	47			0	0				
06:15		5	42			0	0				
06:30		16	41			0	0				
06:45		10	34	40	164	0	0	0	0	40	164
07:00		18	40			0	0				
07:15		16	48			0	0				
07:30		21	43			0	0				
07:45		21	39	76	170	0	0	0	0	76	170
08:00		13	36			0	0				
08:15		27	27			0	0				
08:30		19	28			0	0				
08:45		27	28	86	119	0	0	0	0	86	119
09:00		47	21			0	0				
09:15		41	24			0	0				
09:30		36	21			0	0				
09:45		49	13	173	79	0	0	0	0	173	79
10:00		49	7			0	0				
10:15		49	13			0	0				
10:30		42	10			0	0				
10:45		52	9	192	39	0	0	0	0	192	39
11:00		48	11			0	0				
11:15		44	13			0	0				
11:30		46	7			0	0				
11:45		42	3	180	34	0	0	0	0	180	34
Total		857	1914			0	0			857	1914
Percent		30.9%	69.1%			0.0%	0.0%			30.9%	69.1%

Accurate Counts
978-664-2565

Location : West Road South of
Location : Crosby Street
City/State: Milford, NH
Counter : 13735

517840V2
Site Code: 51784002

Start Time	05-Jun-06 Mon	SB Morning	SB Afternoon	Hour Totals Morning	Hour Totals Afternoon	NB Morning	NB Afternoon	Hour Totals Morning	Hour Totals Afternoon	Combined Totals Morning	Combined Totals Afternoon
12:00		9	*			0	*				
12:15		3	*			0	*				
12:30		2	*			0	*				
12:45		1	*	15	0	0	*	0	0	15	0
01:00		3	*			0	*				
01:15		5	*			0	*				
01:30		0	*			0	*				
01:45		3	*	11	0	0	*	0	0	11	0
02:00		1	*			0	*				
02:15		3	*			0	*				
02:30		2	*			0	*				
02:45		1	*	7	0	0	*	0	0	7	0
03:00		1	*			0	*				
03:15		1	*			0	*				
03:30		1	*			0	*				
03:45		5	*	8	0	0	*	0	0	8	0
04:00		3	*			0	*				
04:15		3	*			0	*				
04:30		8	*			0	*				
04:45		5	*	19	0	0	*	0	0	19	0
05:00		9	*			0	*				
05:15		8	*			0	*				
05:30		21	*			0	*				
05:45		6	*	44	0	2	*	2	0	46	0
06:00		*	*	*	*	*	*	*	*	*	*
06:15		*	*	*	*	*	*	*	*	*	*
06:30		*	*	*	*	*	*	*	*	*	*
06:45		*	*	*	*	*	*	*	*	*	*
07:00		*	*	*	*	*	*	*	*	*	*
07:15		*	*	*	*	*	*	*	*	*	*
07:30		*	*	*	*	*	*	*	*	*	*
07:45		*	*	*	*	*	*	*	*	*	*
08:00		*	*	*	*	*	*	*	*	*	*
08:15		*	*	*	*	*	*	*	*	*	*
08:30		*	*	*	*	*	*	*	*	*	*
08:45		*	*	*	*	*	*	*	*	*	*
09:00		*	*	*	*	*	*	*	*	*	*
09:15		*	*	*	*	*	*	*	*	*	*
09:30		*	*	*	*	*	*	*	*	*	*
09:45		*	*	*	*	*	*	*	*	*	*
10:00		*	*	*	*	*	*	*	*	*	*
10:15		*	*	*	*	*	*	*	*	*	*
10:30		*	*	*	*	*	*	*	*	*	*
10:45		*	*	*	*	*	*	*	*	*	*
11:00		*	*	*	*	*	*	*	*	*	*
11:15		*	*	*	*	*	*	*	*	*	*
11:30		*	*	*	*	*	*	*	*	*	*
11:45		*	*	*	*	*	*	*	*	*	*
Total		104	0			2	0			106	0
Percent		100.0%	0.0%			100.0%	0.0%			100.0%	0.0%
Grand Total		15564	30603			12540	24028			28104	54631
Percent		33.7%	66.3%			34.3%	65.7%			34.0%	66.0%

ADT Not Calculated

Accurate Counts
978-664-2565

Location : West Street South of
Location : Crosby Street
City/State: Milford, NH
Counter : 5849

51784AV2
Site Code: 51784002

Start Time	05-Jun-06 Mon	SB Morning	SB Afternoon	Hour Totals Morning	Hour Totals Afternoon	NB Morning	NB Afternoon	Hour Totals Morning	Hour Totals Afternoon	Combined Totals Morning	Combined Totals Afternoon
12:00		*	30			*	26				
12:15		*	23			*	27				
12:30		*	28			*	24				
12:45		*	48	0	129	*	26	0	103	0	232
01:00		*	59			*	43				
01:15		*	38			*	128				
01:30		*	52			*	48				
01:45		*	40	0	189	*	54	0	273	0	462
02:00		*	37			*	50				
02:15		*	46			*	48				
02:30		*	46			*	60				
02:45		*	51	0	180	*	54	0	212	0	392
03:00		*	53			*	65				
03:15		*	51			*	65				
03:30		*	47			*	47				
03:45		*	46	0	197	*	43	0	220	0	417
04:00		*	37			*	53				
04:15		*	58			*	41				
04:30		*	49			*	50				
04:45		*	48	0	192	*	36	0	180	0	372
05:00		8	57			21	42				
05:15		12	38			19	26				
05:30		25	26			29	25				
05:45		61	29	106	150	36	40	105	133	211	283
06:00		99	27			49	33				
06:15		116	35			88	30				
06:30		51	33			82	32				
06:45		36	32	302	127	41	21	260	116	562	243
07:00		32	25			24	21				
07:15		30	20			42	15				
07:30		29	25			33	21				
07:45		43	19	134	89	38	10	137	67	271	156
08:00		23	12			28	16				
08:15		11	14			35	14				
08:30		20	7			30	11				
08:45		23	21	77	54	34	9	127	50	204	104
09:00		17	9			30	7				
09:15		24	7			21	8				
09:30		29	5			26	8				
09:45		24	12	94	33	32	4	109	27	203	60
10:00		31	12			27	5				
10:15		28	7			32	5				
10:30		25	3			31	4				
10:45		30	0	114	22	24	3	114	17	228	39
11:00		29	5			43	0				
11:15		31	4			37	2				
11:30		46	1			30	1				
11:45		34	0	140	10	48	2	158	5	298	15
Total		967	1372			1010	1403			1977	2775
Percent		41.3%	58.7%			41.9%	58.1%			41.6%	58.4%

Accurate Counts
978-664-2565

Location : West Street South of
Location : Crosby Street
City/State: Milford, NH
Counter : 5849

51784AV2
Site Code: 51784002

Start	06-Jun-06	SB		Hour Totals		NB		Hour Totals		Combined Totals	
Time	Tue	Morning	Afternoon	Morning	Afternoon	Morning	Afternoon	Morning	Afternoon	Morning	Afternoon
12:00		2	26			1	35				
12:15		5	31			2	34				
12:30		1	26			0	38				
12:45		1	38	9	121	0	31	3	138	12	259
01:00		5	48			1	43				
01:15		0	31			0	115				
01:30		1	47			1	29				
01:45		1	72	7	198	2	10	4	197	11	395
02:00		0	67			0	14				
02:15		0	64			1	11				
02:30		0	82			0	12				
02:45		1	63	1	276	1	9	2	46	3	322
03:00		1	58			3	9				
03:15		1	71			3	17				
03:30		1	69			8	10				
03:45		2	74	5	272	8	10	22	46	27	318
04:00		3	80			8	18				
04:15		3	63			7	11				
04:30		7	77			17	10				
04:45		11	46	24	266	10	8	42	47	66	313
05:00		9	52			20	10				
05:15		16	62			23	13				
05:30		25	46			40	10				
05:45		54	43	104	203	33	7	116	40	220	243
06:00		91	46			49	4				
06:15		119	37			91	7				
06:30		54	59			81	11				
06:45		36	43	300	185	38	11	259	33	559	218
07:00		25	53			36	13				
07:15		29	35			37	1				
07:30		34	30			27	3				
07:45		42	39	130	157	30	4	130	21	260	178
08:00		27	21			38	7				
08:15		30	35			41	3				
08:30		20	31			32	7				
08:45		13	26	90	113	19	4	130	21	220	134
09:00		30	21			27	6				
09:15		16	16			27	2				
09:30		46	13			26	2				
09:45		24	16	116	66	44	2	124	12	240	78
10:00		28	12			23	3				
10:15		29	11			29	3				
10:30		27	9			39	2				
10:45		42	5	126	37	31	1	122	9	248	46
11:00		36	1			46	0				
11:15		37	1			34	1				
11:30		35	0			49	0				
11:45		42	1	150	3	50	0	179	1	329	4
Total		1062	1897			1133	611			2195	2508
Percent		35.9%	64.1%			65.0%	35.0%			46.7%	53.3%

Accurate Counts
978-664-2565

Location : West Street South of
Location : Crosby Street
City/State: Milford, NH
Counter : 5849

51784AV2
Site Code: 51784002

Start	07-Jun-06	SB		Hour Totals		NB		Hour Totals		Combined Totals	
Time	Wed	Morning	Afternoon	Morning	Afternoon	Morning	Afternoon	Morning	Afternoon	Morning	Afternoon
12:00		1	39			0	10				
12:15		5	34			0	9				
12:30		1	35			0	8				
12:45		0	70	7	178	0	9	0	36	7	214
01:00		0	45			0	11				
01:15		3	52			1	15				
01:30		1	45			0	11				
01:45		0	56	4	198	1	13	2	50	6	248
02:00		2	55			0	17				
02:15		4	65			2	10				
02:30		0	80			1	19				
02:45		0	68	6	268	0	13	3	59	9	327
03:00		3	67			1	11				
03:15		0	63			1	12				
03:30		4	44			3	13				
03:45		3	64	10	238	1	13	6	49	16	287
04:00		4	58			1	17				
04:15		4	65			4	11				
04:30		6	74			5	7				
04:45		24	54	38	251	4	11	14	46	52	297
05:00		15	50			6	4				
05:15		28	31			8	6				
05:30		42	44			10	4				
05:45		78	45	163	170	19	4	43	18	206	188
06:00		137	32			28	8				
06:15		158	40			18	8				
06:30		91	41			18	7				
06:45		38	33	424	146	9	4	73	27	497	173
07:00		61	37			8	9				
07:15		43	30			3	5				
07:30		52	26			7	3				
07:45		35	23	191	116	10	5	28	22	219	138
08:00		48	17			10	3				
08:15		34	14			8	3				
08:30		18	25			4	6				
08:45		21	9	121	65	7	1	29	13	150	78
09:00		40	17			10	8				
09:15		22	8			7	2				
09:30		41	11			3	2				
09:45		47	7	150	43	11	2	31	14	181	57
10:00		49	11			8	2				
10:15		43	8			9	2				
10:30		43	7			9	2				
10:45		25	1	160	27	9	0	35	6	195	33
11:00		37	4			9	0				
11:15		45	3			8	0				
11:30		56	4			11	0				
11:45		57	4	195	15	7	2	35	2	230	17
Total		1469	1715			299	342			1768	2057
Percent		46.1%	53.9%			46.6%	53.4%			46.2%	53.8%

Accurate Counts
978-664-2565

Location : West Street South of
Location : Crosby Street
City/State: Milford, NH
Counter : 5849

51784AV2
Site Code: 51784002

Start Time	08-Jun-06 Thu	SB Morning	SB Afternoon	Hour Totals Morning	Hour Totals Afternoon	NB Morning	NB Afternoon	Hour Totals Morning	Hour Totals Afternoon	Combined Totals Morning	Combined Totals Afternoon
12:00		0	21			0	4				
12:15		6	1			0	0				
12:30		0	0			0	0				
12:45		0	57	6	79	0	10	0	14	6	93
01:00		0	55			0	11				
01:15		1	57			1	13				
01:30		1	72			2	11				
01:45		1	53	3	237	0	10	3	45	6	282
02:00		1	67			1	11				
02:15		0	46			0	1				
02:30		0	63			1	3				
02:45		2	64	3	240	0	4	2	19	5	259
03:00		3	84			3	10				
03:15		2	47			4	10				
03:30		2	66			0	8				
03:45		2	58	9	255	3	11	10	39	19	294
04:00		3	63			2	5				
04:15		3	66			3	7				
04:30		9	55			2	7				
04:45		14	43	29	227	4	10	11	29	40	256
05:00		13	87			1	17				
05:15		29	64			12	9				
05:30		31	66			7	10				
05:45		77	47	150	264	17	10	37	46	187	310
06:00		127	50			10	12				
06:15		124	54			3	9				
06:30		54	99			3	17				
06:45		46	73	351	276	7	9	23	47	374	323
07:00		45	57			10	7				
07:15		39	30			8	7				
07:30		39	44			4	6				
07:45		57	20	180	151	4	2	26	22	206	173
08:00		40	16			8	3				
08:15		44	23			4	4				
08:30		41	27			10	4				
08:45		25	24	150	90	4	3	26	14	176	104
09:00		35	14			7	3				
09:15		29	16			7	2				
09:30		34	10			9	4				
09:45		42	10	140	50	11	2	34	11	174	61
10:00		54	16			12	3				
10:15		51	9			8	0				
10:30		35	6			11	3				
10:45		51	4	191	35	10	1	41	7	232	42
11:00		42	4			7	3				
11:15		56	2			13	0				
11:30		40	2			6	2				
11:45		52	3	190	11	13	0	39	5	229	16
Total		1402	1915			252	298			1654	2213
Percent		42.3%	57.7%			45.8%	54.2%			42.8%	57.2%

Accurate Counts
978-664-2565

Location : West Street South of
Location : Crosby Street
City/State: Milford, NH
Counter : 5849

51784AV2
Site Code: 51784002

Start	09-Jun-06	SB		Hour Totals		NB		Hour Totals		Combined Totals	
Time	Fri	Morning	Afternoon	Morning	Afternoon	Morning	Afternoon	Morning	Afternoon	Morning	Afternoon
12:00		1	63			1	8				
12:15		1	28			1	3				
12:30		2	32			1	10				
12:45		2	91	6	214	0	18	3	39	9	253
01:00		0	59			0	16				
01:15		3	65			0	17				
01:30		3	80			3	13				
01:45		4	73	10	277	1	13	4	59	14	336
02:00		4	64			1	16				
02:15		1	66			0	13				
02:30		0	84			0	12				
02:45		2	83	7	297	0	11	1	52	8	349
03:00		1	73			1	12				
03:15		1	74			2	12				
03:30		0	61			0	18				
03:45		1	75	3	283	0	17	3	59	6	342
04:00		4	90			1	30				
04:15		9	58			1	20				
04:30		5	59			3	20				
04:45		15	55	33	262	1	17	6	87	39	349
05:00		17	51			2	28				
05:15		25	46			4	13				
05:30		41	46			10	21				
05:45		91	49	174	192	11	18	27	80	201	272
06:00		139	35			17	10				
06:15		156	31			18	17				
06:30		69	34			16	18				
06:45		45	42	409	142	7	17	58	62	467	204
07:00		49	41			7	16				
07:15		43	34			9	11				
07:30		40	25			10	6				
07:45		44	23	176	123	19	17	45	50	221	173
08:00		34	26			9	15				
08:15		36	22			6	12				
08:30		26	24			5	19				
08:45		43	13	139	85	7	12	27	58	166	143
09:00		42	19			8	17				
09:15		43	13			8	12				
09:30		31	11			9	11				
09:45		52	13	168	56	7	12	32	52	200	108
10:00		46	12			9	9				
10:15		45	11			7	10				
10:30		55	11			10	10				
10:45		45	6	191	40	17	2	43	31	234	71
11:00		57	3			12	2				
11:15		54	4			11	0				
11:30		48	4			6	3				
11:45		50	4	209	15	8	4	37	9	246	24
Total		1525	1986			286	638			1811	2624
Percent		43.4%	56.6%			31.0%	69.0%			40.8%	59.2%

Accurate Counts
978-664-2565

Location : West Street South of
Location : Crosby Street
City/State: Milford, NH
Counter : 5849

51784AV2
Site Code: 51784002

Start Time	10-Jun-06 Sat	SB Morning	SB Afternoon	Hour Totals Morning	Hour Totals Afternoon	NB Morning	NB Afternoon	Hour Totals Morning	Hour Totals Afternoon	Combined Totals Morning	Combined Totals Afternoon
12:00		5	26			3	20				
12:15		8	26			2	18				
12:30		8	3			4	5				
12:45		2	0	23	55	1	0	10	43	33	98
01:00		3	0			2	0				
01:15		3	0			3	0				
01:30		1	0			1	0				
01:45		1	0	8	0	1	0	7	0	15	0
02:00		1	0			0	0				
02:15		0	0			0	0				
02:30		0	0			0	0				
02:45		1	*	2	0	4	*	4	0	6	0
03:00		1	*			2	*				
03:15		3	*			3	*				
03:30		0	*			1	*				
03:45		1	*	5	0	1	*	7	0	12	0
04:00		2	*			3	*				
04:15		2	*			3	*				
04:30		2	*			4	*				
04:45		2	*	8	0	6	*	16	0	24	0
05:00		3	*			2	*				
05:15		6	*			8	*				
05:30		6	*			4	*				
05:45		9	*	24	0	11	*	25	0	49	0
06:00		7	*			7	*				
06:15		7	*			5	*				
06:30		11	*			16	*				
06:45		19	*	44	0	18	*	46	0	90	0
07:00		15	*			16	*				
07:15		14	*			9	*				
07:30		23	*			17	*				
07:45		25	*	77	0	18	*	60	0	137	0
08:00		33	*			24	*				
08:15		32	*			19	*				
08:30		25	*			20	*				
08:45		29	*	119	0	16	*	79	0	198	0
09:00		17	*			12	*				
09:15		27	*			17	*				
09:30		34	*			23	*				
09:45		43	*	121	0	27	*	79	0	200	0
10:00		36	*			23	*				
10:15		29	*			22	*				
10:30		42	*			33	*				
10:45		50	*	157	0	33	*	111	0	268	0
11:00		31	*			18	*				
11:15		36	*			22	*				
11:30		34	*			31	*				
11:45		28	*	129	0	18	*	89	0	218	0
Total		717	55			533	43			1250	98
Percent		92.9%	7.1%			92.5%	7.5%			92.7%	7.3%
Grand Total		7142	8940			3513	3335			10655	12275
Percent		44.4%	55.6%			51.3%	48.7%			46.5%	53.5%

ADT Not Calculated

Accurate Counts
978-664-2565

Location : West Road South of
Location : Crosby Street
City/State: Milford, NH
Counter : 10122

51784002
Site Code: 51784002

Start Time	01-May-06 SB	01-May-06 NB	Tue SB	Tue NB	Wed SB	Wed NB	Thu SB	Thu NB	Fri SB	Fri NB	Sat SB	Sat NB	Sun SB	Sun NB	Week Average SB	Week Average NB
12:00 AM	*	*	*	*	*	*	*	*	*	*	22	15	34	28	28	22
01:00	*	*	*	*	*	*	*	*	*	*	12	13	16	6	14	10
02:00	*	*	*	*	*	*	*	*	*	*	2	6	6	6	4	6
03:00	*	*	*	*	*	*	*	*	*	*	0	2	3	3	2	2
04:00	*	*	*	*	*	*	*	*	*	*	8	12	1	5	4	8
05:00	*	*	*	*	*	*	*	*	*	*	12	25	5	18	8	22
06:00	*	*	*	*	*	*	*	*	*	*	34	53	16	30	25	42
07:00	*	*	*	*	*	*	*	*	*	*	167	140	30	39	98	90
08:00	*	*	*	*	*	*	*	*	*	*	90	131	47	67	68	99
09:00	*	*	*	*	*	*	*	*	*	*	143	126	122	104	132	115
10:00	*	*	*	*	*	*	*	*	*	*	169	204	**136**	118	152	161
11:00	*	*	*	*	*	*	*	*	*	*	**209**	**207**	132	**148**	**170**	**178**
12:00 PM	*	*	*	*	*	*	*	*	*	*	184	**240**	132	**158**	158	**199**
01:00	*	*	*	*	*	*	*	*	*	*	188	209	**150**	143	**169**	176
02:00	*	*	*	*	*	*	*	*	*	*	176	167	103	106	140	136
03:00	*	*	*	*	*	*	*	*	*	*	184	194	148	153	166	174
04:00	*	*	*	*	*	*	*	*	*	*	151	149	124	111	138	130
05:00	*	*	*	*	*	*	*	*	*	*	**194**	149	131	117	162	133
06:00	*	*	*	*	*	*	*	*	*	*	132	120	106	86	119	103
07:00	*	*	*	*	*	*	*	*	*	*	106	105	105	103	106	104
08:00	*	*	*	*	*	*	*	*	*	*	100	70	86	53	93	62
09:00	*	*	*	*	*	*	*	*	*	*	68	112	50	46	59	79
10:00	*	*	*	*	*	*	*	*	*	*	49	34	25	17	37	26
11:00	*	*	*	*	*	*	*	*	*	*	29	21	15	14	22	18
Lane	0	0	0	0	0	0	0	0	0	0	2429	2504	1723	1679	2074	2095
Day	0		0		0		0		0		4933		3402		4169	
AM Peak											11:00	11:00	10:00	11:00	11:00	11:00
Vol.											209	207	136	148	170	178
PM Peak											17:00	12:00	13:00	12:00	13:00	12:00
Vol.											194	240	150	158	169	199

Accurate Counts
978-664-2565

Location : West Road South of
Location : Crosby Street
City/State: Milford, NH
Counter : 10122

51784002
Site Code: 51784002

Start Time	08-May-06 SB	08-May-06 NB	Tue SB	Tue NB	Wed SB	Wed NB	Thu SB	Thu NB	Fri SB	Fri NB	Sat SB	Sat NB	Sun SB	Sun NB	Week Average SB	Week Average NB
12:00 AM	3	5	9	3	11	4	8	9	11	8	16	13	15	22	10	9
01:00	4	5	6	3	5	7	2	3	6	5	16	7	17	9	8	6
02:00	3	4	3	1	4	0	0	2	6	2	5	8	4	4	4	3
03:00	3	4	0	5	0	1	0	2	2	4	4	3	2	3	2	3
04:00	6	11	5	11	1	10	3	11	8	8	3	10	2	4	4	9
05:00	16	44	16	47	21	40	17	48	17	47	9	24	10	16	15	38
06:00	96	107	86	95	81	86	88	94	85	79	28	39	16	31	69	76
07:00	**309**	**268**	**292**	**260**	**311**	**260**	**315**	**264**	**308**	**272**	36	71	31	46	**229**	**206**
08:00	140	141	126	132	117	136	136	130	135	157	56	99	36	55	107	121
09:00	100	126	96	115	104	121	118	132	124	124	113	130	71	78	104	118
10:00	97	100	99	121	97	107	88	137	112	124	141	**149**	**94**	88	104	118
11:00	112	107	110	101	104	118	129	117	129	146	**154**	134	86	**122**	118	121
12:00 PM	162	181	145	176	141	176	143	183	163	172	**141**	**148**	90	**151**	141	170
01:00	125	128	124	128	136	112	114	120	136	121	131	119	**111**	106	125	119
02:00	182	**291**	**192**	**295**	187	**290**	189	**276**	**206**	**309**	131	110	107	77	**171**	**235**
03:00	184	226	186	200	**188**	206	**200**	176	190	203	117	111	108	102	168	175
04:00	170	219	166	158	174	174	197	236	184	195	112	101	100	103	158	169
05:00	**196**	182	187	167	180	198	198	201	180	188	120	102	96	96	165	162
06:00	196	173	138	151	149	106	200	160	161	150	102	102	92	83	148	132
07:00	147	128	135	113	101	110	150	188	122	108	82	79	86	90	118	117
08:00	101	72	74	85	99	85	89	109	78	73	71	59	76	57	84	77
09:00	46	42	52	43	55	37	57	49	73	43	58	48	49	40	56	43
10:00	27	23	21	30	26	24	45	43	49	43	41	35	29	23	34	32
11:00	25	9	17	8	15	13	29	14	35	23	40	29	24	20	26	17
Lane	2450	2596	2285	2448	2307	2421	2515	2704	2520	2604	1727	1730	1352	1426	2168	2276
Day	5046		4733		4728		5219		5124		3457		2778		4444	
AM Peak	07:00	07:00	07:00	07:00	07:00	07:00	07:00	07:00	07:00	07:00	11:00	10:00	10:00	11:00	07:00	07:00
Vol.	309	268	292	260	311	260	315	264	308	272	154	149	94	122	229	206
PM Peak	17:00	14:00	14:00	14:00	15:00	14:00	15:00	14:00	14:00	14:00	12:00	12:00	13:00	12:00	14:00	14:00
Vol.	196	291	192	295	188	290	200	276	206	309	141	148	111	151	171	235

Accurate Counts
978-664-2565

Location : West Road South of
Location : Crosby Street
City/State: Milford, NH
Counter : 10122

51784002
Site Code: 51784002

Start Time	15-May-06 SB	15-May-06 NB	Tue SB	Tue NB	Wed SB	Wed NB	Thu SB	Thu NB	Fri SB	Fri NB	Sat SB	Sat NB	Sun SB	Sun NB	Week Average SB	Week Average NB
12:00 AM	12	6	10	9	9	9	9	6	*	*	*	*	*	*	10	8
01:00	4	4	5	5	1	2	6	2	*	*	*	*	*	*	4	3
02:00	2	3	5	3	6	5	5	7	*	*	*	*	*	*	4	4
03:00	3	3	0	2	5	8	3	5	*	*	*	*	*	*	3	4
04:00	6	10	5	16	2	15	5	10	*	*	*	*	*	*	4	13
05:00	14	40	12	38	17	36	15	42	*	*	*	*	*	*	14	39
06:00	38	90	88	96	89	98	97	78	*	*	*	*	*	*	78	90
07:00	64	95	**331**	**303**	165	142	**317**	**303**	*	*	*	*	*	*	**219**	**211**
08:00	68	78	126	130	121	130	140	160	*	*	*	*	*	*	114	124
09:00	60	97	99	153	**265**	**239**	129	141	*	*	*	*	*	*	138	158
10:00	92	96	102	134	139	149	*	*	*	*	*	*	*	*	111	126
11:00	**99**	**116**	112	132	130	144	*	*	*	*	*	*	*	*	114	131
12:00 PM	139	153	157	175	154	193	*	*	*	*	*	*	*	*	150	174
01:00	128	120	131	130	178	199	*	*	*	*	*	*	*	*	146	150
02:00	89	135	220	**265**	**221**	**305**	*	*	*	*	*	*	*	*	177	**235**
03:00	138	137	**222**	224	201	237	*	*	*	*	*	*	*	*	187	199
04:00	136	169	175	206	203	208	*	*	*	*	*	*	*	*	171	194
05:00	**157**	**170**	191	205	221	229	*	*	*	*	*	*	*	*	**190**	201
06:00	137	127	123	153	179	176	*	*	*	*	*	*	*	*	146	152
07:00	117	94	122	105	152	130	*	*	*	*	*	*	*	*	130	110
08:00	75	60	83	67	125	103	*	*	*	*	*	*	*	*	94	77
09:00	42	28	59	49	53	43	*	*	*	*	*	*	*	*	51	40
10:00	32	21	29	33	37	31	*	*	*	*	*	*	*	*	33	28
11:00	15	17	23	13	18	12	*	*	*	*	*	*	*	*	19	14
Lane	1667	1869	2430	2646	2691	2843	726	754	0	0	0	0	0	0	2307	2485
Day	3536		5076		5534		1480		0		0		0		4792	
AM Peak	11:00	11:00	07:00	07:00	09:00	09:00	07:00	07:00							07:00	07:00
Vol.	99	116	331	303	265	239	317	303							219	211
PM Peak	17:00	17:00	15:00	14:00	14:00	14:00									17:00	14:00
Vol.	157	170	222	265	221	305									190	235
Comb. Total	8582		9809		10262		6699		5124		8390		6180		13405	
ADT	Not Calculated															

Accurate Counts
978-664-2565

Location : West Road South of
Location : Crosby Street
City State: Milford, NH
Counter : 13735

517840V2
Site Code: 51784002

Start	15-May-06		Tue		Wed		Thu		Fri		Sat		Sun		Week Average	
Time	SB	NB	SB	NB	SB	NB	SB	NB	SB	NB	SB	NB	SB	NB	SB	NB
12:00 AM	*	*	*	*	*	*	*	*	16	12	26	19	21	11	21	14
01:00	*	*	*	*	*	*	*	*	11	1	24	6	23	11	19	6
02:00	*	*	*	*	*	*	*	*	2	5	8	7	13	9	8	7
03:00	*	*	*	*	*	*	*	*	3	4	4	3	1	6	3	4
04:00	*	*	*	*	*	*	*	*	1	11	7	11	5	6	4	9
05:00	*	*	*	*	*	*	*	*	23	48	7	23	9	20	13	30
06:00	*	*	*	*	*	*	*	*	91	103	32	44	13	19	45	55
07:00	*	*	*	*	*	*	*	*	**290**	**281**	86	96	29	44	135	140
08:00	*	*	*	*	*	*	*	*	144	147	124	155	61	70	110	124
09:00	*	*	*	*	*	*	*	*	114	146	174	180	121	124	136	150
10:00	*	*	*	*	*	*	107	146	94	134	171	190	**138**	113	128	146
11:00	*	*	*	*	*	*	**148**	**158**	139	134	**214**	**195**	130	**144**	**158**	**158**
12:00 PM	*	*	*	*	*	*	163	183	167	199	173	**187**	119	**173**	156	186
01:00	*	*	*	*	*	*	133	145	161	148	**177**	156	**161**	130	158	145
02:00	*	*	*	*	*	*	195	**343**	**210**	**313**	148	134	148	144	175	**234**
03:00	*	*	*	*	*	*	202	226	154	208	164	173	137	126	164	183
04:00	*	*	*	*	*	*	210	243	209	226	139	147	100	118	164	184
05:00	*	*	*	*	*	*	**253**	258	195	200	155	132	132	108	**184**	174
06:00	*	*	*	*	*	*	224	214	179	159	143	112	110	82	164	142
07:00	*	*	*	*	*	*	190	154	165	137	111	144	85	112	138	137
08:00	*	*	*	*	*	*	150	122	125	86	78	65	86	75	110	87
09:00	*	*	*	*	*	*	104	95	87	116	54	58	32	34	69	76
10:00	*	*	*	*	*	*	45	64	65	55	52	45	32	22	48	46
11:00	*	*	*	*	*	*	26	12	48	36	40	26	22	16	34	22
Lane	0	0	0	0	0	0	2150	2363	2693	2909	2311	2308	1728	1717	2344	2459
Day	0		0		0		4513		5602		4619		3445		4803	
AM Peak							11:00	11:00	07:00	07:00	11:00	11:00	10:00	11:00	11:00	11:00
Vol.							148	158	290	281	214	195	138	144	158	158
PM Peak							17:00	14:00	14:00	14:00	13:00	12:00	13:00	12:00	17:00	14:00
Vol.							253	343	210	313	177	187	161	173	184	234

Accurate Counts
978-664-2565

Location : West Road South of
Location : Crosby Street
City State: Milford, NH
Counter : 13735

517840V2
Site Code: 51784002

Start Time	22-May-06 SB	22-May-06 NB	Tue SB	Tue NB	Wed SB	Wed NB	Thu SB	Thu NB	Fri SB	Fri NB	Sat SB	Sat NB	Sun SB	Sun NB	Week Average SB	Week Average NB
12:00 AM	8	7	7	10	12	10	12	6	16	20	18	16	29	15	15	12
01:00	4	6	4	3	4	4	2	4	6	4	12	12	16	11	7	6
02:00	1	4	5	6	4	3	5	4	7	5	7	7	6	4	5	5
03:00	3	6	2	5	1	9	3	3	4	13	3	6	3	4	3	7
04:00	6	14	8	17	8	19	4	13	6	15	3	9	6	7	6	13
05:00	18	45	16	38	18	40	21	51	14	41	24	23	8	18	17	37
06:00	80	97	96	98	82	97	101	86	87	95	29	43	19	25	71	77
07:00	**300**	**255**	**291**	**256**	**290**	**250**	**307**	**278**	**301**	**252**	76	81	52	62	**231**	**205**
08:00	120	140	122	155	130	137	130	127	143	137	84	109	60	59	113	123
09:00	93	123	111	127	95	140	119	134	113	117	129	154	94	114	108	130
10:00	100	115	91	109	112	111	121	129	113	149	**168**	**182**	**125**	117	119	130
11:00	142	130	107	121	129	143	131	166	142	168	167	176	113	**126**	133	147
12:00 PM	157	166	125	165	152	196	161	184	172	152	135	127	**113**	**155**	145	164
01:00	135	120	125	113	145	146	140	143	169	188	**166**	**157**	99	120	140	141
02:00	163	**289**	205	**292**	190	**255**	188	**288**	203	**279**	147	126	107	90	172	**231**
03:00	195	201	171	217	185	231	220	230	208	208	124	130	108	95	173	187
04:00	209	200	**228**	254	199	225	201	255	197	239	135	125	96	71	181	196
05:00	**211**	221	214	222	**228**	220	247	285	**219**	192	139	113	106	89	**195**	192
06:00	163	147	192	166	197	185	**265**	200	156	148	131	97	78	95	169	148
07:00	145	118	153	140	164	149	188	173	123	105	83	86	103	90	137	123
08:00	104	84	109	113	131	123	134	140	84	89	92	90	75	68	104	101
09:00	59	65	64	51	67	51	85	149	77	83	78	57	61	43	70	71
10:00	32	25	39	32	42	41	50	47	54	34	65	64	37	34	46	40
11:00	25	15	25	19	34	19	41	21	45	31	45	37	46	32	37	25
Lane	2473	2593	2510	2729	2619	2804	2876	3116	2659	2764	2060	2027	1560	1544	2397	2511
Day	5066		5239		5423		5992		5423		4087		3104		4908	
AM Peak	07:00	07:00	07:00	07:00	07:00	07:00	07:00	07:00	07:00	07:00	10:00	10:00	10:00	11:00	07:00	07:00
Vol.	300	255	291	256	290	250	307	278	301	252	168	182	125	126	231	205
PM Peak	17:00	14:00	16:00	14:00	17:00	14:00	18:00	14:00	17:00	14:00	13:00	13:00	12:00	12:00	17:00	14:00
Vol.	211	289	228	292	228	255	265	288	219	279	166	157	113	155	195	231

Accurate Counts
978-664-2565

Location : West Road South of
Location : Crosby Street
City/State: Milford, NH
Counter : 13735

517840V2
Site Code: 51784002

Start Time	29-May-06 SB	29-May-06 NB	Tue SB	Tue NB	Wed SB	Wed NB	Thu SB	Thu NB	Fri SB	Fri NB	Sat SB	Sat NB	Sun SB	Sun NB	Week Average SB	Week Average NB
12:00 AM	17	20	8	4	12	6	12	8	16	0	31	0	32	0	18	5
01:00	11	12	4	3	2	3	8	6	10	0	17	0	26	0	11	3
02:00	3	4	6	4	2	1	4	3	9	0	15	0	7	0	7	2
03:00	5	4	1	5	2	10	0	5	4	0	6	0	6	0	3	3
04:00	6	5	5	14	5	14	5	13	12	0	10	0	10	0	8	7
05:00	7	19	17	51	20	40	23	45	51	0	25	0	29	0	25	22
06:00	13	26	78	108	84	106	100	97	171	0	56	0	40	0	77	48
07:00	28	40	**286**	**268**	**310**	**266**	**314**	**268**	**481**	0	94	0	76	0	**227**	**120**
08:00	51	61	129	124	135	143	125	128	249	0	166	0	86	0	134	65
09:00	117	117	111	131	109	144	147	152	241	0	208	0	173	0	158	78
10:00	170	62	99	110	86	99	99	175	215	0	214	0	**192**	0	154	64
11:00	**208**	**123**	137	137	117	119	142	151	286	0	**233**	**1**	180	0	186	76
12:00 PM	**142**	**149**	158	169	154	172	145	180	299	0	**284**	0	**257**	0	206	96
01:00	105	111	145	116	129	149	136	120	257	0	221	0	223	0	174	71
02:00	93	85	184	**273**	181	**331**	188	**306**	**420**	0	194	0	203	0	209	**142**
03:00	120	104	179	212	**237**	238	190	210	359	1	199	0	213	0	**214**	109
04:00	104	89	**195**	195	192	208	200	218	349	**3**	203	0	193	0	205	102
05:00	98	99	194	177	237	214	208	214	310	1	174	0	220	0	206	101
06:00	115	111	155	156	233	195	**272**	177	266	1	185	0	164	0	199	91
07:00	108	98	128	131	174	164	188	155	216	0	185	0	170	0	167	78
08:00	87	75	118	86	132	146	259	31	179	0	117	0	119	0	144	48
09:00	54	50	62	48	108	137	134	3	103	0	109	0	79	0	93	34
10:00	30	18	33	27	42	34	56	0	89	0	87	0	39	0	54	11
11:00	18	14	35	13	32	23	40	0	67	0	54	0	34	0	40	7
Lane	1710	1496	2467	2562	2735	2962	2995	2665	4659	6	3087	1	2771	0	2919	1383
Day	3206		5029		5697		5660		4665		3088		2771		4302	
AM Peak	11:00	11:00	07:00	07:00	07:00	07:00	07:00	07:00	07:00		11:00	11:00	10:00		07:00	07:00
Vol.	208	123	286	268	310	266	314	268	481		233	1	192		227	120
PM Peak	12:00	12:00	16:00	14:00	15:00	14:00	18:00	14:00	14:00	16:00	12:00		12:00		15:00	14:00
Vol.	142	149	195	273	237	331	272	306	420	3	284		257		214	142

Accurate Counts
978-664-2565

Location : West Road South of
Location : Crosby Street
City State: Milford, NH
Counter : 13735

517840V2
Site Code: 51784002

Start Time	05-Jun-06 SB	05-Jun-06 NB	Tue SB	Tue NB	Wed SB	Wed NB	Thu SB	Thu NB	Fri SB	Fri NB	Sat SB	Sat NB	Sun SB	Sun NB	Week Average SB	Week Average NB
12:00 AM	15	0	*	*	*	*	*	*	*	*	*	*	*	*	15	0
01:00	11	0	*	*	*	*	*	*	*	*	*	*	*	*	11	0
02:00	7	0	*	*	*	*	*	*	*	*	*	*	*	*	7	0
03:00	8	0	*	*	*	*	*	*	*	*	*	*	*	*	8	0
04:00	19	0	*	*	*	*	*	*	*	*	*	*	*	*	19	0
05:00	**44**	**2**	*	*	*	*	*	*	*	*	*	*	*	*	**44**	**2**
06:00	*	*	*	*	*	*	*	*	*	*	*	*	*	*	*	*
07:00	*	*	*	*	*	*	*	*	*	*	*	*	*	*	*	*
08:00	*	*	*	*	*	*	*	*	*	*	*	*	*	*	*	*
09:00	*	*	*	*	*	*	*	*	*	*	*	*	*	*	*	*
10:00	*	*	*	*	*	*	*	*	*	*	*	*	*	*	*	*
11:00	*	*	*	*	*	*	*	*	*	*	*	*	*	*	*	*
12:00 PM	*	*	*	*	*	*	*	*	*	*	*	*	*	*	*	*
01:00	*	*	*	*	*	*	*	*	*	*	*	*	*	*	*	*
02:00	*	*	*	*	*	*	*	*	*	*	*	*	*	*	*	*
03:00	*	*	*	*	*	*	*	*	*	*	*	*	*	*	*	*
04:00	*	*	*	*	*	*	*	*	*	*	*	*	*	*	*	*
05:00	*	*	*	*	*	*	*	*	*	*	*	*	*	*	*	*
06:00	*	*	*	*	*	*	*	*	*	*	*	*	*	*	*	*
07:00	*	*	*	*	*	*	*	*	*	*	*	*	*	*	*	*
08:00	*	*	*	*	*	*	*	*	*	*	*	*	*	*	*	*
09:00	*	*	*	*	*	*	*	*	*	*	*	*	*	*	*	*
10:00	*	*	*	*	*	*	*	*	*	*	*	*	*	*	*	*
11:00	*	*	*	*	*	*	*	*	*	*	*	*	*	*	*	*
Lane	104	2	0	0	0	0	0	0	0	0	0	0	0	0	104	2
Day	106		0		0		0		0		0		0		106	
AM Peak	05:00	05:00													05:00	05:00
Vol.	44	2													44	2
PM Peak																
Vol.																
Comb. Total	8378		10268		11120		16165		15690		11794		9320		14119	
ADT	Not Calculated															

Accurate Counts
978-664-2565

Location : West Street South of
Location : Crosby Street
City State: Milford, NH
Counter : 5849

51784AV2
Site Code: 51784002

Start Time	05-Jun-06 SB	05-Jun-06 NB	Tue SB	Tue NB	Wed SB	Wed NB	Thu SB	Thu NB	Fri SB	Fri NB	Sat SB	Sat NB	Sun SB	Sun NB	Week Average SB	Week Average NB
12:00 AM	*	*	9	3	7	0	6	0	6	3	23	10	*	*	10	3
01:00	*	*	7	4	4	2	3	3	10	4	8	7	*	*	6	4
02:00	*	*	1	2	6	3	3	2	7	1	2	4	*	*	4	2
03:00	*	*	5	22	10	6	9	10	3	3	5	7	*	*	6	10
04:00	*	*	24	42	38	14	29	11	33	6	8	16	*	*	26	18
05:00	106	105	104	116	163	43	150	37	174	27	24	25	*	*	120	59
06:00	**302**	**260**	**300**	**259**	**424**	**73**	**351**	23	**409**	**58**	44	46	*	*	**305**	**120**
07:00	134	137	130	130	191	28	180	26	176	45	77	60	*	*	148	71
08:00	77	127	90	130	121	29	150	26	139	27	119	79	*	*	116	70
09:00	94	109	116	124	150	31	140	34	168	32	121	79	*	*	132	68
10:00	114	114	126	122	160	35	191	**41**	191	43	**157**	**111**	*	*	156	78
11:00	140	158	150	179	195	35	190	39	209	37	129	89	*	*	169	90
12:00 PM	129	103	121	138	178	36	79	14	214	39	**55**	**43**	*	*	129	62
01:00	189	**273**	198	**197**	198	50	237	45	277	59	0	0	*	*	183	**104**
02:00	180	212	**276**	46	**268**	**59**	240	19	**297**	52	*	*	*	*	**252**	78
03:00	**197**	220	272	46	238	49	255	39	283	59	*	*	*	*	249	83
04:00	192	180	266	47	251	46	227	29	262	**87**	*	*	*	*	240	78
05:00	150	133	203	40	170	18	264	46	192	80	*	*	*	*	196	63
06:00	127	116	185	33	146	27	**276**	**47**	142	62	*	*	*	*	175	57
07:00	89	67	157	21	116	22	151	22	123	50	*	*	*	*	127	36
08:00	54	50	113	21	65	13	90	14	85	58	*	*	*	*	81	31
09:00	33	27	66	12	43	14	50	11	56	52	*	*	*	*	50	23
10:00	22	17	37	9	27	6	35	7	40	31	*	*	*	*	32	14
11:00	10	5	3	1	15	2	11	5	15	9	*	*	*	*	11	4
Lane	2339	2413	2959	1744	3184	641	3317	550	3511	924	772	576	0	0	2923	1226
Day	4752		4703		3825		3867		4435		1348		0		4149	
AM Peak	06:00	06:00	06:00	06:00	06:00	06:00	06:00	10:00	06:00	06:00	10:00	10:00			06:00	06:00
Vol.	302	260	300	259	424	73	351	41	409	58	157	111			305	120
PM Peak	15:00	13:00	14:00	13:00	14:00	14:00	18:00	18:00	14:00	16:00	12:00	12:00			14:00	13:00
Vol.	197	273	276	197	268	59	276	47	297	87	55	43			252	104
Comb. Total	4752		4703		3825		3867		4435		1348		0		4149	

ADT Not Calculated

Attachment D-5

Vehicle Classification Data – West Road south of Crosby Street

Location : West Road South of
Location : Crosby Street
City/State: Milford, NH
Counter : 13735
Southbound

Accurate Counts
978-664-2565

517840C2
Site Code: 51784002

Start Time	Bikes	Cars & Trailers	2 Axle Long	Buses	2 Axle 6 Tire	3 Axle Single	4 Axle Single	<5 Axl Double	5 Axle Double	>6 Axl Double	<6 Axl Multi	6 Axle Multi	>6 Axl Multi	Total
05/18/06	*	*	*	*	*	*	*	*	*	*	*	*	*	*
01:00	*	*	*	*	*	*	*	*	*	*	*	*	*	*
02:00	*	*	*	*	*	*	*	*	*	*	*	*	*	*
03:00	*	*	*	*	*	*	*	*	*	*	*	*	*	*
04:00	*	*	*	*	*	*	*	*	*	*	*	*	*	*
05:00	*	*	*	*	*	*	*	*	*	*	*	*	*	*
06:00	*	*	*	*	*	*	*	*	*	*	*	*	*	*
07:00	*	*	*	*	*	*	*	*	*	*	*	*	*	*
08:00	*	*	*	*	*	*	*	*	*	*	*	*	*	*
09:00	*	*	*	*	*	*	*	*	*	*	*	*	*	*
10:00	**1**	77	**20**	0	**7**	**1**	0	**1**	0	0	0	0	0	107
11:00	0	**123**	19	0	5	1	0	0	0	0	0	0	0	**148**
12 PM	4	139	17	0	3	0	0	0	0	0	0	0	0	163
13:00	0	105	20	2	5	0	0	**1**	0	0	0	0	0	133
14:00	7	143	28	**11**	**6**	0	0	0	0	0	0	0	0	195
15:00	7	162	25	1	5	**2**	0	0	0	0	0	0	0	202
16:00	0	172	**34**	0	4	0	0	0	0	0	0	0	0	210
17:00	6	**209**	32	0	4	2	0	0	0	0	0	0	0	**253**
18:00	**10**	189	21	0	3	1	0	0	0	0	0	0	0	224
19:00	2	157	28	0	3	0	0	0	0	0	0	0	0	190
20:00	3	127	19	0	1	0	0	0	0	0	0	0	0	150
21:00	0	86	18	0	0	0	0	0	0	0	0	0	0	104
22:00	2	32	10	0	1	0	0	0	0	0	0	0	0	45
23:00	0	18	7	0	1	0	0	0	0	0	0	0	0	26
Day Total	42	1739	298	14	48	7	0	2	0	0	0	0	0	2150
Percent	2.0%	80.9%	13.9%	0.7%	2.2%	0.3%	0.0%	0.1%	0.0%	0.0%	0.0%	0.0%	0.0%	
AM Peak	10:00	11:00	10:00		10:00	10:00		10:00						11:00
Vol.	1	123	20		7	1		1						148
PM Peak	18:00	17:00	16:00	14:00	14:00	15:00		13:00						17:00
Vol.	10	209	34	11	6	2		1						253

Location : West Road South of
Location : Crosby Street
City/State: Milford, NH
Counter : 13735
Southbound

Accurate Counts
978-664-2565

517840C2
Site Code: 51784002

Start Time	Bikes	Cars & Trailers	2 Axle Long	Buses	2 Axle 6 Tire	3 Axle Single	4 Axle Single	<5 Axl Double	5 Axle Double	>6 Axl Double	<6 Axl Multi	6 Axle Multi	>6 Axl Multi	Total
05/19/06	1	13	2	0	0	0	0	0	0	0	0	0	0	16
01:00	0	10	0	0	1	0	0	0	0	0	0	0	0	11
02:00	0	2	0	0	0	0	0	0	0	0	0	0	0	2
03:00	0	3	0	0	0	0	0	0	0	0	0	0	0	3
04:00	0	0	1	0	0	0	0	0	0	0	0	0	0	1
05:00	0	15	8	0	0	0	0	0	0	0	0	0	0	23
06:00	0	73	18	0	0	0	0	0	0	0	0	0	0	91
07:00	**2**	**228**	**48**	**7**	2	**2**	0	**1**	0	0	0	0	0	**290**
08:00	2	113	23	0	**6**	0	0	0	0	0	0	0	0	144
09:00	0	90	18	1	5	0	0	0	0	0	0	0	0	114
10:00	0	70	21	0	2	0	0	0	**1**	0	0	0	0	94
11:00	0	112	22	0	4	0	0	1	0	0	0	0	0	139
12 PM	1	132	29	0	4	0	**1**	0	0	0	0	0	0	167
13:00	1	124	22	**9**	3	0	0	**1**	**1**	0	0	0	0	161
14:00	1	157	**44**	6	2	0	0	0	0	0	0	0	0	**210**
15:00	0	124	27	1	1	1	0	0	0	0	0	0	0	154
16:00	0	**175**	33	0	1	0	0	0	0	0	0	0	0	209
17:00	1	157	36	0	1	0	0	0	0	0	0	0	0	195
18:00	0	147	23	0	**7**	0	0	1	1	0	0	0	0	179
19:00	0	133	28	0	2	**2**	0	0	0	0	0	0	0	165
20:00	**2**	100	20	0	2	0	0	1	0	0	0	0	0	125
21:00	0	75	9	0	3	0	0	0	0	0	0	0	0	87
22:00	0	56	9	0	0	0	0	0	0	0	0	0	0	65
23:00	0	42	5	0	1	0	0	0	0	0	0	0	0	48
Day Total	11	2151	446	24	47	5	1	5	3	0	0	0	0	2693
Percent	0.4%	79.9%	16.6%	0.9%	1.7%	0.2%	0.0%	0.2%	0.1%	0.0%	0.0%	0.0%	0.0%	
AM Peak	07:00	07:00	07:00	07:00	08:00	07:00		07:00	10:00					07:00
Vol.	2	228	48	7	6	2		1	1					290
PM Peak	20:00	16:00	14:00	13:00	18:00	19:00	12:00	13:00	13:00					14:00
Vol.	2	175	44	9	7	2	1	1	1					210

Location : West Road South of
Location : Crosby Street
City/State: Milford, NH
Counter : 13735
Southbound

Accurate Counts
978-664-2565

517840C2
Site Code: 51784002

Start Time	Bikes	Cars & Trailers	2 Axle Long	Buses	2 Axle 6 Tire	3 Axle Single	4 Axle Single	<5 Axl Double	5 Axle Double	>6 Axl Double	<6 Axl Multi	6 Axle Multi	>6 Axl Multi	Total
05/20/06	1	24	1	0	0	0	0	0	0	0	0	0	0	26
01:00	0	22	2	0	0	0	0	0	0	0	0	0	0	24
02:00	0	7	1	0	0	0	0	0	0	0	0	0	0	8
03:00	1	3	0	0	0	0	0	0	0	0	0	0	0	4
04:00	0	6	1	0	0	0	0	0	0	0	0	0	0	7
05:00	0	2	5	0	0	0	0	0	0	0	0	0	0	7
06:00	0	20	12	0	0	0	0	0	0	0	0	0	0	32
07:00	0	62	23	0	0	**1**	0	0	0	0	0	0	0	86
08:00	0	100	22	1	0	0	0	**1**	0	0	0	0	0	124
09:00	3	136	27	**2**	**6**	0	0	0	0	0	0	0	0	174
10:00	3	135	32	0	0	1	0	0	0	0	0	0	0	171
11:00	**4**	**164**	**44**	0	1	0	0	1	0	0	0	0	0	**214**
12 PM	**3**	140	28	0	2	0	0	0	0	0	0	0	0	173
13:00	1	**142**	**32**	0	1	**1**	0	0	0	0	0	0	0	**177**
14:00	2	121	24	0	1	0	0	0	0	0	0	0	0	148
15:00	3	136	20	**2**	3	0	0	0	0	0	0	0	0	164
16:00	1	116	17	0	**4**	1	0	0	0	0	0	0	0	139
17:00	0	122	32	0	1	0	0	0	0	0	0	0	0	155
18:00	2	122	17	0	2	0	0	0	0	0	0	0	0	143
19:00	3	98	9	0	1	0	0	0	0	0	0	0	0	111
20:00	1	69	6	0	2	0	0	0	0	0	0	0	0	78
21:00	0	45	8	0	0	0	0	**1**	0	0	0	0	0	54
22:00	1	45	6	0	0	0	0	0	0	0	0	0	0	52
23:00	0	36	4	0	0	0	0	0	0	0	0	0	0	40
Day Total	29	1873	373	5	24	4	0	3	0	0	0	0	0	2311
Percent	1.3%	81.0%	16.1%	0.2%	1.0%	0.2%	0.0%	0.1%	0.0%	0.0%	0.0%	0.0%	0.0%	
AM Peak	11:00	11:00	11:00	09:00	09:00	07:00		08:00						11:00
Vol.	4	164	44	2	6	1		1						214
PM Peak	12:00	13:00	13:00	15:00	16:00	13:00		21:00						13:00
Vol.	3	142	32	2	4	1		1						177

Location : West Road South of
Location : Crosby Street
City/State: Milford, NH
Counter : 13735
Southbound

Accurate Counts
978-664-2565

517840C2
Site Code: 51784002

Start Time	Bikes	Cars & Trailers	2 Axle Long	Buses	2 Axle 6 Tire	3 Axle Single	4 Axle Single	<5 Axl Double	5 Axle Double	>6 Axl Double	<6 Axl Multi	6 Axle Multi	>6 Axl Multi	Total
05/21/06	0	21	0	0	0	0	0	0	0	0	0	0	0	21
01:00	1	18	2	0	2	0	0	0	0	0	0	0	0	23
02:00	0	13	0	0	0	0	0	0	0	0	0	0	0	13
03:00	0	1	0	0	0	0	0	0	0	0	0	0	0	1
04:00	0	4	1	0	0	0	0	0	0	0	0	0	0	5
05:00	0	6	3	0	0	0	0	0	0	0	0	0	0	9
06:00	0	11	2	0	0	0	0	0	0	0	0	0	0	13
07:00	0	19	10	0	0	0	0	0	0	0	0	0	0	29
08:00	1	43	14	0	**3**	0	0	0	0	0	0	0	0	61
09:00	1	99	20	0	1	0	0	0	0	0	0	0	0	121
10:00	4	**103**	**29**	0	2	0	0	0	0	0	0	0	0	**138**
11:00	**5**	101	23	0	1	0	0	0	0	0	0	0	0	130
12 PM	**2**	93	22	0	**2**	0	0	0	0	0	0	0	0	119
13:00	1	**136**	21	**1**	1	0	0	**1**	0	0	0	0	0	**161**
14:00	0	121	**25**	0	2	0	0	0	0	0	0	0	0	148
15:00	1	112	22	0	1	**1**	0	0	0	0	0	0	0	137
16:00	0	82	15	0	2	0	0	1	0	0	0	0	0	100
17:00	1	106	25	0	0	0	0	0	0	0	0	0	0	132
18:00	1	98	11	0	0	0	0	0	0	0	0	0	0	110
19:00	0	68	15	1	1	0	0	0	0	0	0	0	0	85
20:00	1	75	10	0	0	0	0	0	0	0	0	0	0	86
21:00	0	26	6	0	0	0	0	0	0	0	0	0	0	32
22:00	0	30	2	0	0	0	0	0	0	0	0	0	0	32
23:00	1	20	1	0	0	0	0	0	0	0	0	0	0	22
Day Total	20	1406	279	2	18	1	0	2	0	0	0	0	0	1728
Percent	1.2%	81.4%	16.1%	0.1%	1.0%	0.1%	0.0%	0.1%	0.0%	0.0%	0.0%	0.0%	0.0%	
AM Peak	11:00	10:00	10:00		08:00									10:00
Vol.	5	103	29		3									138
PM Peak	12:00	13:00	14:00	13:00	12:00	15:00		13:00						13:00
Vol.	2	136	25	1	2	1		1						161

Location : West Road South of
Location : Crosby Street
City/State: Milford, NH
Counter : 13735
Southbound

Accurate Counts
978-664-2565

517840C2
Site Code: 51784002

Start Time	Bikes	Cars & Trailers	2 Axle Long	Buses	2 Axle 6 Tire	3 Axle Single	4 Axle Single	<5 Axl Double	5 Axle Double	>6 Axl Double	<6 Axl Multi	6 Axle Multi	>6 Axl Multi	Total
05/22/06	0	6	2	0	0	0	0	0	0	0	0	0	0	8
01:00	0	3	1	0	0	0	0	0	0	0	0	0	0	4
02:00	0	1	0	0	0	0	0	0	0	0	0	0	0	1
03:00	0	1	2	0	0	0	0	0	0	0	0	0	0	3
04:00	0	2	4	0	0	0	0	0	0	0	0	0	0	6
05:00	0	11	6	0	0	1	0	0	0	0	0	0	0	18
06:00	0	66	13	0	0	0	0	1	0	0	0	0	0	80
07:00	**3**	**245**	**40**	**6**	3	**2**	0	1	0	0	0	0	0	**300**
08:00	1	87	22	0	**7**	2	0	1	0	0	0	0	0	120
09:00	1	77	12	0	3	0	0	0	0	0	0	0	0	93
10:00	1	77	18	0	1	1	0	1	**1**	0	0	0	0	100
11:00	0	111	25	0	3	0	0	**2**	1	0	0	0	0	142
12 PM	2	124	23	1	**5**	1	0	1	0	0	0	0	0	157
13:00	2	97	24	7	3	**2**	0	0	0	0	0	0	0	135
14:00	3	123	24	**8**	3	0	0	**2**	0	0	0	0	0	163
15:00	**5**	148	34	4	1	0	0	2	**1**	0	0	0	0	195
16:00	3	163	**37**	0	5	0	0	1	0	0	0	0	0	209
17:00	4	**176**	25	0	3	1	0	2	0	0	0	0	0	**211**
18:00	2	133	24	1	2	1	0	0	0	0	0	0	0	163
19:00	0	113	29	1	2	0	0	0	0	0	0	0	0	145
20:00	0	91	13	0	0	0	0	0	0	0	0	0	0	104
21:00	0	50	7	0	2	0	0	0	0	0	0	0	0	59
22:00	0	30	2	0	0	0	0	0	0	0	0	0	0	32
23:00	0	24	1	0	0	0	0	0	0	0	0	0	0	25
Day Total	27	1959	388	28	43	11	0	14	3	0	0	0	0	2473
Percent	1.1%	79.2%	15.7%	1.1%	1.7%	0.4%	0.0%	0.6%	0.1%	0.0%	0.0%	0.0%	0.0%	
AM Peak	07:00	07:00	07:00	07:00	08:00	07:00		11:00	10:00					07:00
Vol.	3	245	40	6	7	2		2	1					300
PM Peak	15:00	17:00	16:00	14:00	12:00	13:00		14:00	15:00					17:00
Vol.	5	176	37	8	5	2		2	1					211

Location : West Road South of
Location : Crosby Street
City/State: Milford, NH
Counter : 13735
Southbound

Accurate Counts
978-664-2565

517840C2
Site Code: 51784002

Start Time	Bikes	Cars & Trailers	2 Axle Long	Buses	2 Axle 6 Tire	3 Axle Single	4 Axle Single	<5 Axl Double	5 Axle Double	>6 Axl Double	<6 Axl Multi	6 Axle Multi	>6 Axl Multi	Total
05/23/06	0	6	1	0	0	0	0	0	0	0	0	0	0	7
01:00	0	4	0	0	0	0	0	0	0	0	0	0	0	4
02:00	0	3	2	0	0	0	0	0	0	0	0	0	0	5
03:00	0	1	0	0	1	0	0	0	0	0	0	0	0	2
04:00	0	6	2	0	0	0	0	0	0	0	0	0	0	8
05:00	2	9	5	0	0	0	0	0	0	0	0	0	0	16
06:00	0	76	18	0	2	0	0	0	0	0	0	0	0	96
07:00	**5**	**228**	**44**	**7**	2	0	0	**5**	0	0	0	0	0	**291**
08:00	0	93	19	1	**8**	0	0	1	0	0	0	0	0	122
09:00	0	82	26	0	3	0	0	0	0	0	0	0	0	111
10:00	0	74	13	0	3	**1**	0	0	0	0	0	0	0	91
11:00	0	86	17	0	2	0	0	1	**1**	0	0	0	0	107
12 PM	2	94	23	1	3	1	0	1	0	0	0	0	0	125
13:00	1	94	18	2	**5**	1	0	**4**	0	0	0	0	0	125
14:00	2	166	20	**12**	3	**2**	0	0	0	0	0	0	0	205
15:00	**4**	137	27	1	2	0	0	0	0	0	0	0	0	171
16:00	3	**182**	**40**	0	2	1	0	0	0	0	0	0	0	**228**
17:00	4	173	32	0	4	0	0	1	0	0	0	0	0	214
18:00	2	159	27	0	4	0	0	0	0	0	0	0	0	192
19:00	1	127	19	3	2	0	0	1	0	0	0	0	0	153
20:00	1	95	12	0	0	0	0	1	0	0	0	0	0	109
21:00	2	52	9	0	1	0	0	0	0	0	0	0	0	64
22:00	2	31	6	0	0	0	0	0	0	0	0	0	0	39
23:00	0	21	4	0	0	0	0	0	0	0	0	0	0	25
Day Total	31	1999	384	27	47	6	0	15	1	0	0	0	0	2510
Percent	1.2%	79.6%	15.3%	1.1%	1.9%	0.2%	0.0%	0.6%	0.0%	0.0%	0.0%	0.0%	0.0%	
AM Peak	07:00	07:00	07:00	07:00	08:00	10:00		07:00	11:00					07:00
Vol.	5	228	44	7	8	1		5	1					291
PM Peak	15:00	16:00	16:00	14:00	13:00	14:00		13:00						16:00
Vol.	4	182	40	12	5	2		4						228

Location : West Road South of
Location : Crosby Street
City/State: Milford, NH
Counter : 13735
Southbound

Accurate Counts
978-664-2565

517840C2
Site Code: 51784002

Start Time	Bikes	Cars & Trailers	2 Axle Long	Buses	2 Axle 6 Tire	3 Axle Single	4 Axle Single	<5 Axl Double	5 Axle Double	>6 Axl Double	<6 Axl Multi	6 Axle Multi	>6 Axl Multi	Total
05/24/06	0	12	0	0	0	0	0	0	0	0	0	0	0	12
01:00	0	4	0	0	0	0	0	0	0	0	0	0	0	4
02:00	0	4	0	0	0	0	0	0	0	0	0	0	0	4
03:00	0	1	0	0	0	0	0	0	0	0	0	0	0	1
04:00	0	7	1	0	0	0	0	0	0	0	0	0	0	8
05:00	0	11	7	0	0	0	0	0	0	0	0	0	0	18
06:00	1	55	25	0	0	0	0	**1**	0	0	0	0	0	82
07:00	**4**	**245**	**31**	**4**	**3**	**2**	0	1	0	0	0	0	0	**290**
08:00	0	108	18	0	3	1	0	0	0	0	0	0	0	130
09:00	0	78	15	0	2	0	0	0	0	0	0	0	0	95
10:00	1	90	17	0	3	0	0	1	0	0	0	0	0	112
11:00	0	107	20	0	2	0	0	0	0	0	0	0	0	129
12 PM	1	127	21	1	2	0	0	0	0	0	0	0	0	152
13:00	2	118	23	0	2	0	0	0	0	0	0	0	0	145
14:00	3	147	23	**15**	1	0	0	1	0	0	0	0	0	190
15:00	5	150	26	1	2	0	0	0	**1**	0	0	0	0	185
16:00	2	164	28	0	**4**	0	0	1	0	0	0	0	0	199
17:00	**7**	**188**	27	0	3	**1**	0	**2**	0	0	0	0	0	**228**
18:00	3	164	28	1	1	0	0	0	0	0	0	0	0	197
19:00	6	127	**29**	0	1	0	0	0	0	**1**	0	0	0	164
20:00	1	111	18	0	1	0	0	0	0	0	0	0	0	131
21:00	2	59	6	0	0	0	0	0	0	0	0	0	0	67
22:00	1	36	5	0	0	0	0	0	0	0	0	0	0	42
23:00	0	32	2	0	0	0	0	0	0	0	0	0	0	34
Day Total	39	2145	370	22	30	4	0	7	1	1	0	0	0	2619
Percent	1.5%	81.9%	14.1%	0.8%	1.1%	0.2%	0.0%	0.3%	0.0%	0.0%	0.0%	0.0%	0.0%	
AM Peak	07:00	07:00	07:00	07:00	07:00	07:00		06:00						07:00
Vol.	4	245	31	4	3	2		1						290
PM Peak	17:00	17:00	19:00	14:00	16:00	17:00		17:00	15:00	19:00				17:00
Vol.	7	188	29	15	4	1		2	1	1				228

Location : West Road South of
Location : Crosby Street
City/State: Milford, NH
Counter : 13735
Southbound

Accurate Counts
978-664-2565

517840C2
Site Code: 51784002

Start Time	Bikes	Cars & Trailers	2 Axle Long	Buses	2 Axle 6 Tire	3 Axle Single	4 Axle Single	<5 Axl Double	5 Axle Double	>6 Axl Double	<6 Axl Multi	6 Axle Multi	>6 Axl Multi	Total
05/25/06	1	10	1	0	0	0	0	0	0	0	0	0	0	12
01:00	0	1	1	0	0	0	0	0	0	0	0	0	0	2
02:00	0	3	2	0	0	0	0	0	0	0	0	0	0	5
03:00	0	2	0	0	1	0	0	0	0	0	0	0	0	3
04:00	0	3	1	0	0	0	0	0	0	0	0	0	0	4
05:00	2	11	7	0	1	0	0	0	0	0	0	0	0	21
06:00	**3**	82	14	0	2	0	0	0	0	0	0	0	0	101
07:00	3	**249**	**43**	**6**	**3**	**3**	0	0	0	0	0	0	0	**307**
08:00	1	110	18	0	1	0	0	0	0	0	0	0	0	130
09:00	2	96	18	0	3	0	0	0	0	0	0	0	0	119
10:00	1	97	17	1	3	1	0	**1**	0	0	0	0	0	121
11:00	1	116	14	0	0	0	0	0	0	0	0	0	0	131
12 PM	3	126	25	1	**6**	0	0	0	0	0	0	0	0	161
13:00	4	108	22	0	6	0	0	0	0	0	0	0	0	140
14:00	**6**	136	27	**15**	3	0	0	**1**	0	0	0	0	0	188
15:00	6	185	20	2	4	**3**	0	0	0	0	0	0	0	220
16:00	5	161	32	0	0	1	0	1	**1**	0	0	0	0	201
17:00	4	207	35	0	1	0	0	0	0	0	0	0	0	247
18:00	6	**221**	**37**	0	1	0	0	0	0	0	0	0	0	**265**
19:00	4	160	23	0	1	0	0	0	0	0	0	0	0	188
20:00	6	107	19	0	2	0	0	0	0	0	0	0	0	134
21:00	1	70	14	0	0	0	0	0	0	0	0	0	0	85
22:00	0	43	7	0	0	0	0	0	0	0	0	0	0	50
23:00	0	37	3	0	1	0	0	0	0	0	0	0	0	41
Day Total	59	2341	400	25	39	8	0	3	1	0	0	0	0	2876
Percent	2.1%	81.4%	13.9%	0.9%	1.4%	0.3%	0.0%	0.1%	0.0%	0.0%	0.0%	0.0%	0.0%	
AM Peak	06:00	07:00	07:00	07:00	07:00	07:00		10:00						07:00
Vol.	3	249	43	6	3	3		1						307
PM Peak	14:00	18:00	18:00	14:00	12:00	15:00		14:00	16:00					18:00
Vol.	6	221	37	15	6	3		1	1					265

Location : West Road South of
Location : Crosby Street
City/State: Milford, NH
Counter : 13735
Southbound

Accurate Counts
978-664-2565

517840C2
Site Code: 51784002

Start Time	Bikes	Cars & Trailers	2 Axle Long	Buses	2 Axle 6 Tire	3 Axle Single	4 Axle Single	<5 Axl Double	5 Axle Double	>6 Axl Double	<6 Axl Multi	6 Axle Multi	>6 Axl Multi	Total
05/26/06	0	14	2	0	0	0	0	0	0	0	0	0	0	16
01:00	0	6	0	0	0	0	0	0	0	0	0	0	0	6
02:00	1	5	1	0	0	0	0	0	0	0	0	0	0	7
03:00	0	3	1	0	0	0	0	0	0	0	0	0	0	4
04:00	2	3	1	0	0	0	0	0	0	0	0	0	0	6
05:00	1	9	4	0	0	0	0	0	0	0	0	0	0	14
06:00	1	65	19	0	2	0	0	0	0	0	0	0	0	87
07:00	**3**	**247**	**42**	**6**	3	0	0	0	0	0	0	0	0	**301**
08:00	3	115	20	0	**4**	**1**	0	0	0	0	0	0	0	143
09:00	2	89	19	0	1	0	0	**2**	0	0	0	0	0	113
10:00	2	87	21	0	1	1	0	1	0	0	0	0	0	113
11:00	0	115	25	0	1	1	0	0	0	0	0	0	0	142
12 PM	4	135	21	2	**4**	**3**	0	**3**	0	0	0	0	0	172
13:00	7	116	**36**	4	4	0	0	1	**1**	0	0	0	0	169
14:00	2	161	24	**11**	4	0	0	1	0	0	0	0	0	203
15:00	3	175	26	1	3	0	0	0	0	0	0	0	0	208
16:00	**9**	154	30	0	2	1	0	1	0	0	0	0	0	197
17:00	0	**191**	24	0	3	1	0	0	0	0	0	0	0	**219**
18:00	0	136	18	0	1	1	0	0	0	0	0	0	0	156
19:00	3	109	9	0	1	1	0	0	0	0	0	0	0	123
20:00	2	72	9	0	1	0	0	0	0	0	0	0	0	84
21:00	1	65	10	0	1	0	0	0	0	0	0	0	0	77
22:00	2	43	8	0	1	0	0	0	0	0	0	0	0	54
23:00	0	41	4	0	0	0	0	0	0	0	0	0	0	45
Day Total	48	2156	374	24	37	10	0	9	1	0	0	0	0	2659
Percent	1.8%	81.1%	14.1%	0.9%	1.4%	0.4%	0.0%	0.3%	0.0%	0.0%	0.0%	0.0%	0.0%	
AM Peak	07:00	07:00	07:00	07:00	08:00	08:00		09:00						07:00
Vol.	3	247	42	6	4	1		2						301
PM Peak	16:00	17:00	13:00	14:00	12:00	12:00		12:00	13:00					17:00
Vol.	9	191	36	11	4	3		3	1					219

Location : West Road South of
Location : Crosby Street
City/State: Milford, NH
Counter : 13735
Southbound

Accurate Counts
978-664-2565

517840C2
Site Code: 51784002

Start Time	Bikes	Cars & Trailers	2 Axle Long	Buses	2 Axle 6 Tire	3 Axle Single	4 Axle Single	<5 Axl Double	5 Axle Double	>6 Axl Double	<6 Axl Multi	6 Axle Multi	>6 Axl Multi	Total
05/27/06	0	17	1	0	0	0	0	0	0	0	0	0	0	18
01:00	0	12	0	0	0	0	0	0	0	0	0	0	0	12
02:00	0	7	0	0	0	0	0	0	0	0	0	0	0	7
03:00	1	2	0	0	0	0	0	0	0	0	0	0	0	3
04:00	0	3	0	0	0	0	0	0	0	0	0	0	0	3
05:00	2	15	7	0	0	0	0	0	0	0	0	0	0	24
06:00	0	20	8	0	1	0	0	0	0	0	0	0	0	29
07:00	0	65	8	**2**	0	0	0	**1**	0	0	0	0	0	76
08:00	1	66	12	0	**3**	**1**	0	1	0	0	0	0	0	84
09:00	1	108	19	0	1	0	0	0	0	0	0	0	0	129
10:00	**3**	132	**30**	0	2	0	0	1	0	0	0	0	0	**168**
11:00	2	**135**	27	0	2	1	0	0	0	0	0	0	0	167
12 PM	2	107	**23**	0	**3**	0	0	0	0	0	0	0	0	135
13:00	3	**138**	23	0	2	0	0	0	0	0	0	0	0	**166**
14:00	6	119	21	0	1	0	0	0	0	0	0	0	0	147
15:00	1	98	21	**1**	3	0	0	0	0	0	0	0	0	124
16:00	4	109	22	0	0	0	0	0	0	0	0	0	0	135
17:00	2	113	21	1	2	0	0	0	0	0	0	0	0	139
18:00	**7**	106	13	0	3	0	0	**2**	0	0	0	0	0	131
19:00	3	72	6	0	2	0	0	0	0	0	0	0	0	83
20:00	6	82	4	0	0	0	0	0	0	0	0	0	0	92
21:00	3	66	9	0	0	0	0	0	0	0	0	0	0	78
22:00	3	56	5	0	1	0	0	0	0	0	0	0	0	65
23:00	0	42	3	0	0	0	0	0	0	0	0	0	0	45
Day Total	50	1690	283	4	26	2	0	5	0	0	0	0	0	2060
Percent	2.4%	82.0%	13.7%	0.2%	1.3%	0.1%	0.0%	0.2%	0.0%	0.0%	0.0%	0.0%	0.0%	
AM Peak	10:00	11:00	10:00	07:00	08:00	08:00		07:00						10:00
Vol.	3	135	30	2	3	1		1						168
PM Peak	18:00	13:00	12:00	15:00	12:00			18:00						13:00
Vol.	7	138	23	1	3			2						166

Location : West Road South of
Location : Crosby Street
City/State: Milford, NH
Counter : 13735
Southbound

Accurate Counts
978-664-2565

517840C2
Site Code: 51784002

Start Time	Bikes	Cars & Trailers	2 Axle Long	Buses	2 Axle 6 Tire	3 Axle Single	4 Axle Single	<5 Axl Double	5 Axle Double	>6 Axl Double	<6 Axl Multi	6 Axle Multi	>6 Axl Multi	Total
05/28/06	1	26	2	0	0	0	0	0	0	0	0	0	0	29
01:00	0	14	1	0	1	0	0	0	0	0	0	0	0	16
02:00	1	5	0	0	0	0	0	0	0	0	0	0	0	6
03:00	0	3	0	0	0	0	0	0	0	0	0	0	0	3
04:00	0	5	1	0	0	0	0	0	0	0	0	0	0	6
05:00	0	6	2	0	0	0	0	0	0	0	0	0	0	8
06:00	0	16	3	0	0	0	0	0	0	0	0	0	0	19
07:00	0	44	8	0	0	0	0	0	0	0	0	0	0	52
08:00	0	48	12	0	0	0	0	0	0	0	0	0	0	60
09:00	2	72	**17**	0	**3**	0	0	0	0	0	0	0	0	94
10:00	**6**	**103**	15	0	0	0	0	**1**	0	0	0	0	0	**125**
11:00	2	91	17	0	3	0	0	0	0	0	0	0	0	113
12 PM	3	89	16	0	**3**	0	0	**1**	**1**	0	0	0	0	**113**
13:00	1	79	**19**	0	0	0	0	0	0	0	0	0	0	99
14:00	2	**92**	12	0	1	0	0	0	0	0	0	0	0	107
15:00	5	85	17	0	1	0	0	0	0	0	0	0	0	108
16:00	3	83	10	0	0	0	0	0	0	0	0	0	0	96
17:00	**6**	90	7	0	2	0	0	1	0	0	0	0	0	106
18:00	1	70	6	0	1	0	0	0	0	0	0	0	0	78
19:00	3	79	19	0	2	0	0	0	0	0	0	0	0	103
20:00	2	65	6	0	0	**1**	0	1	0	0	0	0	0	75
21:00	0	52	7	0	2	0	0	0	0	0	0	0	0	61
22:00	1	35	1	0	0	0	0	0	0	0	0	0	0	37
23:00	0	46	0	0	0	0	0	0	0	0	0	0	0	46
Day Total	39	1298	198	0	19	1	0	4	1	0	0	0	0	1560
Percent	2.5%	83.2%	12.7%	0.0%	1.2%	0.1%	0.0%	0.3%	0.1%	0.0%	0.0%	0.0%	0.0%	
AM Peak	10:00	10:00	09:00		09:00			10:00						10:00
Vol.	6	103	17		3			1						125
PM Peak	17:00	14:00	13:00		12:00	20:00		12:00	12:00					12:00
Vol.	6	92	19		3	1		1	1					113

Location : West Road South of
Location : Crosby Street
City/State: Milford, NH
Counter : 13735
Southbound

Accurate Counts
978-664-2565

517840C2
Site Code: 51784002

Start Time	Bikes	Cars & Trailers	2 Axle Long	Buses	2 Axle 6 Tire	3 Axle Single	4 Axle Single	<5 Axl Double	5 Axle Double	>6 Axl Double	<6 Axl Multi	6 Axle Multi	>6 Axl Multi	Total
05/29/06	0	14	2	0	1	0	0	0	0	0	0	0	0	17
01:00	0	11	0	0	0	0	0	0	0	0	0	0	0	11
02:00	0	3	0	0	0	0	0	0	0	0	0	0	0	3
03:00	0	4	1	0	0	0	0	0	0	0	0	0	0	5
04:00	0	5	1	0	0	0	0	0	0	0	0	0	0	6
05:00	0	4	3	0	0	0	0	0	0	0	0	0	0	7
06:00	0	11	2	0	0	0	0	0	0	0	0	0	0	13
07:00	1	20	6	0	1	0	0	0	0	0	0	0	0	28
08:00	1	40	10	0	0	0	0	0	0	0	0	0	0	51
09:00	1	94	21	0	0	**1**	0	0	0	0	0	0	0	117
10:00	1	137	**27**	0	**5**	0	0	0	0	0	0	0	0	170
11:00	**5**	**175**	25	0	3	0	0	0	0	0	0	0	0	**208**
12 PM	3	**111**	**24**	**2**	2	0	0	0	0	0	0	0	0	**142**
13:00	5	80	17	0	2	**1**	0	0	0	0	0	0	0	105
14:00	2	80	10	0	1	0	0	0	0	0	0	0	0	93
15:00	4	100	15	0	1	0	0	0	0	0	0	0	0	120
16:00	4	81	18	0	1	0	0	0	0	0	0	0	0	104
17:00	**8**	81	8	0	1	0	0	0	0	0	0	0	0	98
18:00	1	98	16	0	0	0	0	0	0	0	0	0	0	115
19:00	2	89	14	0	**3**	0	0	0	0	0	0	0	0	108
20:00	3	72	10	0	2	0	0	0	0	0	0	0	0	87
21:00	0	49	5	0	0	0	0	0	0	0	0	0	0	54
22:00	2	25	3	0	0	0	0	0	0	0	0	0	0	30
23:00	1	17	0	0	0	0	0	0	0	0	0	0	0	18
Day Total	44	1401	238	2	23	2	0	0	0	0	0	0	0	1710
Percent	2.6%	81.9%	13.9%	0.1%	1.3%	0.1%	0.0%	0.0%	0.0%	0.0%	0.0%	0.0%	0.0%	
AM Peak	11:00	11:00	10:00		10:00	09:00								11:00
Vol.	5	175	27		5	1								208
PM Peak	17:00	12:00	12:00	12:00	19:00	13:00								12:00
Vol.	8	111	24	2	3	1								142

Location : West Road South of
Location : Crosby Street
City/State: Milford, NH
Counter : 13735
Southbound

Accurate Counts
978-664-2565

517840C2
Site Code: 51784002

Start Time	Bikes	Cars & Trailers	2 Axle Long	Buses	2 Axle 6 Tire	3 Axle Single	4 Axle Single	<5 Axl Double	5 Axle Double	>6 Axl Double	<6 Axl Multi	6 Axle Multi	>6 Axl Multi	Total
05/30/06	0	7	1	0	0	0	0	0	0	0	0	0	0	8
01:00	0	4	0	0	0	0	0	0	0	0	0	0	0	4
02:00	0	5	1	0	0	0	0	0	0	0	0	0	0	6
03:00	0	1	0	0	0	0	0	0	0	0	0	0	0	1
04:00	0	4	1	0	0	0	0	0	0	0	0	0	0	5
05:00	1	11	5	0	0	0	0	0	0	0	0	0	0	17
06:00	0	63	15	0	0	0	0	0	0	0	0	0	0	78
07:00	**4**	**231**	**38**	**6**	**6**	**1**	0	0	0	0	0	0	0	**286**
08:00	1	103	16	1	5	1	**1**	**1**	0	0	0	0	0	129
09:00	0	86	23	0	1	0	0	1	0	0	0	0	0	111
10:00	2	77	17	0	2	0	0	1	0	0	0	0	0	99
11:00	2	112	21	0	1	1	0	0	0	0	0	0	0	137
12 PM	2	128	25	0	3	0	0	0	0	0	0	0	0	158
13:00	4	105	26	**8**	2	0	0	0	0	0	0	0	0	145
14:00	0	146	23	7	**5**	**2**	0	**1**	0	0	0	0	0	184
15:00	4	145	26	1	2	1	0	0	0	0	0	0	0	179
16:00	4	159	**31**	0	1	0	0	0	0	0	0	0	0	**195**
17:00	**10**	**166**	18	0	0	0	0	0	0	0	0	0	0	194
18:00	3	144	8	0	0	0	0	0	0	0	0	0	0	155
19:00	0	111	16	0	1	0	0	0	0	0	0	0	0	128
20:00	3	101	13	0	0	1	0	0	0	0	0	0	0	118
21:00	1	56	5	0	0	0	0	0	0	0	0	0	0	62
22:00	3	28	2	0	0	0	0	0	0	0	0	0	0	33
23:00	0	33	2	0	0	0	0	0	0	0	0	0	0	35
Day Total	44	2026	333	23	29	7	1	4	0	0	0	0	0	2467
Percent	1.8%	82.1%	13.5%	0.9%	1.2%	0.3%	0.0%	0.2%	0.0%	0.0%	0.0%	0.0%	0.0%	
AM Peak	07:00	07:00	07:00	07:00	07:00	07:00	08:00	08:00						07:00
Vol.	4	231	38	6	6	1	1	1						286
PM Peak	17:00	17:00	16:00	13:00	14:00	14:00		14:00						16:00
Vol.	10	166	31	8	5	2		1						195

Location : West Road South of
Location : Crosby Street
City/State: Milford, NH
Counter : 13735
Southbound

Accurate Counts
978-664-2565

517840C2
Site Code: 51784002

Start Time	Bikes	Cars & Trailers	2 Axle Long	Buses	2 Axle 6 Tire	3 Axle Single	4 Axle Single	<5 Axl Double	5 Axle Double	>6 Axl Double	<6 Axl Multi	6 Axle Multi	>6 Axl Multi	Total
05/31/06	0	12	0	0	0	0	0	0	0	0	0	0	0	12
01:00	0	2	0	0	0	0	0	0	0	0	0	0	0	2
02:00	0	2	0	0	0	0	0	0	0	0	0	0	0	2
03:00	0	2	0	0	0	0	0	0	0	0	0	0	0	2
04:00	0	4	1	0	0	0	0	0	0	0	0	0	0	5
05:00	1	15	4	0	0	0	0	0	0	0	0	0	0	20
06:00	**3**	65	16	0	0	0	0	0	0	0	0	0	0	84
07:00	2	**258**	**42**	**7**	1	0	0	0	0	0	0	0	0	**310**
08:00	0	116	17	0	1	**1**	0	0	0	0	0	0	0	135
09:00	1	84	24	0	0	0	0	0	0	0	0	0	0	109
10:00	0	75	9	0	**2**	0	0	0	0	0	0	0	0	86
11:00	0	108	9	0	0	0	0	0	0	0	0	0	0	117
12 PM	3	132	16	0	2	**1**	0	0	0	0	0	0	0	154
13:00	1	105	20	0	2	0	**1**	0	0	0	0	0	0	129
14:00	8	136	19	**15**	2	0	0	**1**	0	0	0	0	0	181
15:00	5	193	**33**	2	**3**	1	0	0	0	0	0	0	0	**237**
16:00	**13**	155	21	0	2	1	0	0	0	0	0	0	0	192
17:00	9	**207**	19	1	1	0	0	0	0	0	0	0	0	237
18:00	4	202	26	0	1	0	0	0	0	0	0	0	0	233
19:00	4	157	13	0	0	0	0	0	0	0	0	0	0	174
20:00	4	111	16	0	1	0	0	0	0	0	0	0	0	132
21:00	3	93	11	0	1	0	0	0	0	0	0	0	0	108
22:00	1	35	4	0	2	0	0	0	0	0	0	0	0	42
23:00	0	31	1	0	0	0	0	0	0	0	0	0	0	32
Day Total	62	2300	321	25	21	4	1	1	0	0	0	0	0	2735
Percent	2.3%	84.1%	11.7%	0.9%	0.8%	0.1%	0.0%	0.0%	0.0%	0.0%	0.0%	0.0%	0.0%	
AM Peak	06:00	07:00	07:00	07:00	10:00	08:00								07:00
Vol.	3	258	42	7	2	1								310
PM Peak	16:00	17:00	15:00	14:00	15:00	12:00	13:00	14:00						15:00
Vol.	13	207	33	15	3	1	1	1						237

Location : West Road South of
Location : Crosby Street
City/State: Milford, NH
Counter : 13735
Southbound

Accurate Counts
978-664-2565

517840C2
Site Code: 51784002

Start Time	Bikes	Cars & Trailers	2 Axle Long	Buses	2 Axle 6 Tire	3 Axle Single	4 Axle Single	<5 Axl Double	5 Axle Double	>6 Axl Double	<6 Axl Multi	6 Axle Multi	>6 Axl Multi	Total
06/01/06	0	9	3	0	0	0	0	0	0	0	0	0	0	12
01:00	**1**	7	0	0	0	0	0	0	0	0	0	0	0	8
02:00	1	3	0	0	0	0	0	0	0	0	0	0	0	4
03:00	0	0	0	0	0	0	0	0	0	0	0	0	0	0
04:00	0	4	1	0	0	0	0	0	0	0	0	0	0	5
05:00	0	15	8	0	0	0	0	0	0	0	0	0	0	23
06:00	1	89	9	0	0	**1**	0	0	0	0	0	0	0	100
07:00	1	**275**	**30**	**5**	2	1	0	0	0	0	0	0	0	**314**
08:00	0	108	16	0	1	0	0	0	0	0	0	0	0	125
09:00	1	131	10	0	1	1	0	**2**	**1**	0	0	0	0	147
10:00	0	77	20	1	0	1	0	0	0	0	0	0	0	99
11:00	1	124	14	0	**3**	0	0	0	0	0	0	0	0	142
12 PM	2	129	13	0	1	0	0	0	0	0	0	0	0	145
13:00	4	106	21	**3**	1	**1**	0	0	0	0	0	0	0	136
14:00	**7**	156	20	2	**2**	0	0	**1**	0	0	0	0	0	188
15:00	2	167	18	1	1	1	0	0	0	0	0	0	0	190
16:00	6	172	20	0	2	0	0	0	0	0	0	0	0	200
17:00	3	177	27	0	1	0	0	0	0	0	0	0	0	208
18:00	2	**250**	17	1	1	1	0	0	0	0	0	0	0	**272**
19:00	1	161	24	0	1	1	0	0	0	0	0	0	0	188
20:00	7	220	**30**	0	2	0	0	0	0	0	0	0	0	259
21:00	6	112	15	1	0	0	0	0	0	0	0	0	0	134
22:00	0	49	7	0	0	0	0	0	0	0	0	0	0	56
23:00	0	35	5	0	0	0	0	0	0	0	0	0	0	40
Day Total	46	2576	328	14	19	8	0	3	1	0	0	0	0	2995
Percent	1.5%	86.0%	11.0%	0.5%	0.6%	0.3%	0.0%	0.1%	0.0%	0.0%	0.0%	0.0%	0.0%	
AM Peak	01:00	07:00	07:00	07:00	11:00	06:00		09:00	09:00					07:00
Vol.	1	275	30	5	3	1		2	1					314
PM Peak	14:00	18:00	20:00	13:00	14:00	13:00		14:00						18:00
Vol.	7	250	30	3	2	1		1						272

Location : West Road South of
Location : Crosby Street
City/State: Milford, NH
Counter : 13735
Southbound

Accurate Counts
978-664-2565

517840C2
Site Code: 51784002

Start Time	Bikes	Cars & Trailers	2 Axle Long	Buses	2 Axle 6 Tire	3 Axle Single	4 Axle Single	<5 Axl Double	5 Axle Double	>6 Axl Double	<6 Axl Multi	6 Axle Multi	>6 Axl Multi	Total
06/02/06	0	14	2	0	0	0	0	0	0	0	0	0	0	16
01:00	0	9	1	0	0	0	0	0	0	0	0	0	0	10
02:00	0	9	0	0	0	0	0	0	0	0	0	0	0	9
03:00	0	4	0	0	0	0	0	0	0	0	0	0	0	4
04:00	0	11	1	0	0	0	0	0	0	0	0	0	0	12
05:00	0	45	6	0	0	0	0	0	0	0	0	0	0	51
06:00	3	146	20	0	2	0	0	0	0	0	0	0	0	171
07:00	**9**	**408**	**58**	0	**6**	0	0	0	0	0	0	0	0	**481**
08:00	5	212	29	0	3	0	0	0	0	0	0	0	0	249
09:00	5	204	29	0	3	0	0	0	0	0	0	0	0	241
10:00	4	184	25	0	2	0	0	0	0	0	0	0	0	215
11:00	6	242	34	0	4	0	0	0	0	0	0	0	0	286
12 PM	5	253	37	0	4	0	0	0	0	0	0	0	0	299
13:00	4	217	32	0	4	0	0	0	0	0	0	0	0	257
14:00	9	**356**	**50**	0	**5**	0	0	0	0	0	0	0	0	**420**
15:00	9	303	43	0	4	0	0	0	0	0	0	0	0	359
16:00	**12**	291	42	0	4	0	0	0	0	0	0	0	0	349
17:00	8	262	36	0	4	0	0	0	0	0	0	0	0	310
18:00	6	225	31	0	4	0	0	0	0	0	0	0	0	266
19:00	5	181	27	0	3	0	0	0	0	0	0	0	0	216
20:00	5	152	21	0	1	0	0	0	0	0	0	0	0	179
21:00	3	88	12	0	0	0	0	0	0	0	0	0	0	103
22:00	1	77	11	0	0	0	0	0	0	0	0	0	0	89
23:00	0	58	9	0	0	0	0	0	0	0	0	0	0	67
Day Total	99	3951	556	0	53	0	0	0	0	0	0	0	0	4659
Percent	2.1%	84.8%	11.9%	0.0%	1.1%	0.0%	0.0%	0.0%	0.0%	0.0%	0.0%	0.0%	0.0%	
AM Peak	07:00	07:00	07:00		07:00									07:00
Vol.	9	408	58		6									481
PM Peak	16:00	14:00	14:00		14:00									14:00
Vol.	12	356	50		5									420

Location : West Road South of
Location : Crosby Street
City/State: Milford, NH
Counter : 13735
Southbound

Accurate Counts
978-664-2565

517840C2
Site Code: 51784002

Start Time	Bikes	Cars & Trailers	2 Axle Long	Buses	2 Axle 6 Tire	3 Axle Single	4 Axle Single	<5 Axl Double	5 Axle Double	>6 Axl Double	<6 Axl Multi	6 Axle Multi	>6 Axl Multi	Total
06/03/06	0	28	3	0	0	0	0	0	0	0	0	0	0	31
01:00	0	15	2	0	0	0	0	0	0	0	0	0	0	17
02:00	0	14	1	0	0	0	0	0	0	0	0	0	0	15
03:00	0	6	0	0	0	0	0	0	0	0	0	0	0	6
04:00	0	9	1	0	0	0	0	0	0	0	0	0	0	10
05:00	0	22	3	0	0	0	0	0	0	0	0	0	0	25
06:00	0	49	7	0	0	0	0	0	0	0	0	0	0	56
07:00	1	81	12	0	0	0	0	0	0	0	0	0	0	94
08:00	**6**	140	19	0	1	0	0	0	0	0	0	0	0	166
09:00	4	177	25	0	2	0	0	0	0	0	0	0	0	208
10:00	5	180	26	0	**3**	0	0	0	0	0	0	0	0	214
11:00	5	**197**	**29**	0	2	0	0	0	0	0	0	0	0	**233**
12 PM	**5**	**240**	**35**	0	**4**	0	0	0	0	0	0	0	0	**284**
13:00	4	187	27	0	3	0	0	0	0	0	0	0	0	221
14:00	4	165	24	0	1	0	0	0	0	0	0	0	0	194
15:00	4	169	24	0	2	0	0	0	0	0	0	0	0	199
16:00	4	173	24	0	2	0	0	0	0	0	0	0	0	203
17:00	4	148	21	0	1	0	0	0	0	0	0	0	0	174
18:00	4	158	22	0	1	0	0	0	0	0	0	0	0	185
19:00	4	158	22	0	1	0	0	0	0	0	0	0	0	185
20:00	3	100	14	0	0	0	0	0	0	0	0	0	0	117
21:00	2	93	14	0	0	0	0	0	0	0	0	0	0	109
22:00	1	75	11	0	0	0	0	0	0	0	0	0	0	87
23:00	0	47	7	0	0	0	0	0	0	0	0	0	0	54
Day Total	60	2631	373	0	23	0	0	0	0	0	0	0	0	3087
Percent	1.9%	85.2%	12.1%	0.0%	0.7%	0.0%	0.0%	0.0%	0.0%	0.0%	0.0%	0.0%	0.0%	
AM Peak	08:00	11:00	11:00		10:00									11:00
Vol.	6	197	29		3									233
PM Peak	12:00	12:00	12:00		12:00									12:00
Vol.	5	240	35		4									284

Location : West Road South of
Location : Crosby Street
City/State: Milford, NH
Counter : 13735
Southbound

Accurate Counts
978-664-2565

517840C2
Site Code: 51784002

Start Time	Bikes	Cars & Trailers	2 Axle Long	Buses	2 Axle 6 Tire	3 Axle Single	4 Axle Single	<5 Axl Double	5 Axle Double	>6 Axl Double	<6 Axl Multi	6 Axle Multi	>6 Axl Multi	Total
06/04/06	0	28	4	0	0	0	0	0	0	0	0	0	0	32
01:00	0	23	3	0	0	0	0	0	0	0	0	0	0	26
02:00	0	7	0	0	0	0	0	0	0	0	0	0	0	7
03:00	0	6	0	0	0	0	0	0	0	0	0	0	0	6
04:00	0	10	0	0	0	0	0	0	0	0	0	0	0	10
05:00	0	25	4	0	0	0	0	0	0	0	0	0	0	29
06:00	0	35	5	0	0	0	0	0	0	0	0	0	0	40
07:00	0	66	10	0	0	0	0	0	0	0	0	0	0	76
08:00	2	74	10	0	0	0	0	0	0	0	0	0	0	86
09:00	**4**	148	21	0	0	0	0	0	0	0	0	0	0	173
10:00	4	**164**	**23**	0	**1**	0	0	0	0	0	0	0	0	**192**
11:00	4	154	22	0	0	0	0	0	0	0	0	0	0	180
12 PM	**4**	**218**	**32**	0	3	0	0	0	0	0	0	0	0	**257**
13:00	4	189	27	0	3	0	0	0	0	0	0	0	0	223
14:00	4	172	24	0	3	0	0	0	0	0	0	0	0	203
15:00	4	181	24	0	**4**	0	0	0	0	0	0	0	0	213
16:00	4	164	23	0	2	0	0	0	0	0	0	0	0	193
17:00	4	188	26	0	2	0	0	0	0	0	0	0	0	220
18:00	4	140	20	0	0	0	0	0	0	0	0	0	0	164
19:00	4	145	21	0	0	0	0	0	0	0	0	0	0	170
20:00	4	102	13	0	0	0	0	0	0	0	0	0	0	119
21:00	0	68	11	0	0	0	0	0	0	0	0	0	0	79
22:00	0	34	5	0	0	0	0	0	0	0	0	0	0	39
23:00	0	30	4	0	0	0	0	0	0	0	0	0	0	34
Day Total	50	2371	332	0	18	0	0	0	0	0	0	0	0	2771
Percent	1.8%	85.6%	12.0%	0.0%	0.6%	0.0%	0.0%	0.0%	0.0%	0.0%	0.0%	0.0%	0.0%	
AM Peak	09:00	10:00	10:00		10:00									10:00
Vol.	4	164	23		1									192
PM Peak	12:00	12:00	12:00		15:00									12:00
Vol.	4	218	32		4									257

Location : West Road South of
Location : Crosby Street
City/State: Milford, NH
Counter : 13735

Accurate Counts
978-664-2565

517840C2
Site Code: 51784002

Southbound

Start Time	Bikes	Cars & Trailers	2 Axle Long	Buses	2 Axle 6 Tire	3 Axle Single	4 Axle Single	<5 Axl Double	5 Axle Double	>6 Axl Double	<6 Axl Multi	6 Axle Multi	>6 Axl Multi	Total
06/05/06	0	14	1	0	0	0	0	0	0	0	0	0	0	15
01:00	0	10	1	0	0	0	0	0	0	0	0	0	0	11
02:00	0	7	0	0	0	0	0	0	0	0	0	0	0	7
03:00	0	7	1	0	0	0	0	0	0	0	0	0	0	8
04:00	0	17	2	0	0	0	0	0	0	0	0	0	0	19
05:00	0	**38**	**6**	0	0	0	0	0	0	0	0	0	0	**44**
06:00	*	*	*	*	*	*	*	*	*	*	*	*	*	*
07:00	*	*	*	*	*	*	*	*	*	*	*	*	*	*
08:00	*	*	*	*	*	*	*	*	*	*	*	*	*	*
09:00	*	*	*	*	*	*	*	*	*	*	*	*	*	*
10:00	*	*	*	*	*	*	*	*	*	*	*	*	*	*
11:00	*	*	*	*	*	*	*	*	*	*	*	*	*	*
12 PM	*	*	*	*	*	*	*	*	*	*	*	*	*	*
13:00	*	*	*	*	*	*	*	*	*	*	*	*	*	*
14:00	*	*	*	*	*	*	*	*	*	*	*	*	*	*
15:00	*	*	*	*	*	*	*	*	*	*	*	*	*	*
16:00	*	*	*	*	*	*	*	*	*	*	*	*	*	*
17:00	*	*	*	*	*	*	*	*	*	*	*	*	*	*
18:00	*	*	*	*	*	*	*	*	*	*	*	*	*	*
19:00	*	*	*	*	*	*	*	*	*	*	*	*	*	*
20:00	*	*	*	*	*	*	*	*	*	*	*	*	*	*
21:00	*	*	*	*	*	*	*	*	*	*	*	*	*	*
22:00	*	*	*	*	*	*	*	*	*	*	*	*	*	*
23:00	*	*	*	*	*	*	*	*	*	*	*	*	*	*
Day Total	0	93	11	0	0	0	0	0	0	0	0	0	0	104
Percent	0.0%	89.4%	10.6%	0.0%	0.0%	0.0%	0.0%	0.0%	0.0%	0.0%	0.0%	0.0%	0.0%	
AM Peak		05:00	05:00											05:00
Vol.		38	6											44
PM Peak														
Vol.														
Grand Total	800	38106	6285	239	564	80	3	77	12	1	0	0	0	46167
Percent	1.7%	82.5%	13.6%	0.5%	1.2%	0.2%	0.0%	0.2%	0.0%	0.0%	0.0%	0.0%	0.0%	

Location : West Road South of
Location : Crosby Street
City/State: Milford, NH
Counter : 13735
Northbound

Accurate Counts
978-664-2565

517840C2
Site Code: 51784002

Start Time	Bikes	Cars & Trailers	2 Axle Long	Buses	2 Axle 6 Tire	3 Axle Single	4 Axle Single	<5 Axl Double	5 Axle Double	>6 Axl Double	<6 Axl Multi	6 Axle Multi	>6 Axl Multi	Total
05/18/06	*	*	*	*	*	*	*	*	*	*	*	*	*	*
01:00	*	*	*	*	*	*	*	*	*	*	*	*	*	*
02:00	*	*	*	*	*	*	*	*	*	*	*	*	*	*
03:00	*	*	*	*	*	*	*	*	*	*	*	*	*	*
04:00	*	*	*	*	*	*	*	*	*	*	*	*	*	*
05:00	*	*	*	*	*	*	*	*	*	*	*	*	*	*
06:00	*	*	*	*	*	*	*	*	*	*	*	*	*	*
07:00	*	*	*	*	*	*	*	*	*	*	*	*	*	*
08:00	*	*	*	*	*	*	*	*	*	*	*	*	*	*
09:00	*	*	*	*	*	*	*	*	*	*	*	*	*	*
10:00	**2**	115	**26**	0	3	0	0	0	0	0	0	0	0	146
11:00	2	**143**	9	0	**4**	0	0	0	0	0	0	0	0	**158**
12 PM	3	163	16	0	0	1	0	0	0	0	0	0	0	183
13:00	3	119	19	0	2	**2**	0	0	0	0	0	0	0	145
14:00	3	**304**	28	**4**	2	0	0	**2**	0	0	0	0	0	**343**
15:00	2	200	20	0	**4**	0	0	0	0	0	0	0	0	226
16:00	4	206	**31**	0	2	0	0	0	0	0	0	0	0	243
17:00	4	230	23	0	0	1	0	0	0	0	0	0	0	258
18:00	**6**	195	13	0	0	0	0	0	0	0	0	0	0	214
19:00	2	140	11	0	0	0	0	1	0	0	0	0	0	154
20:00	2	110	10	0	0	0	0	0	0	0	0	0	0	122
21:00	1	86	8	0	0	0	0	0	0	0	0	0	0	95
22:00	0	57	7	0	0	0	0	0	0	0	0	0	0	64
23:00	0	10	2	0	0	0	0	0	0	0	0	0	0	12
Day Total	34	2078	223	4	17	4	0	3	0	0	0	0	0	2363
Percent	1.4%	87.9%	9.4%	0.2%	0.7%	0.2%	0.0%	0.1%	0.0%	0.0%	0.0%	0.0%	0.0%	
AM Peak	10:00	11:00	10:00		11:00									11:00
Vol.	2	143	26		4									158
PM Peak	18:00	14:00	16:00	14:00	15:00	13:00		14:00						14:00
Vol.	6	304	31	4	4	2		2						343

Location : West Road South of
Location : Crosby Street
City/State: Milford, NH
Counter : 13735
Northbound

Accurate Counts
978-664-2565

517840C2
Site Code: 51784002

Start Time	Bikes	Cars & Trailers	2 Axle Long	Buses	2 Axle 6 Tire	3 Axle Single	4 Axle Single	<5 Axl Double	5 Axle Double	>6 Axl Double	<6 Axl Multi	6 Axle Multi	>6 Axl Multi	Total
05/19/06	0	12	0	0	0	0	0	0	0	0	0	0	0	12
01:00	0	1	0	0	0	0	0	0	0	0	0	0	0	1
02:00	0	4	1	0	0	0	0	0	0	0	0	0	0	5
03:00	0	4	0	0	0	0	0	0	0	0	0	0	0	4
04:00	0	10	1	0	0	0	0	0	0	0	0	0	0	11
05:00	0	39	9	0	0	0	0	0	0	0	0	0	0	48
06:00	0	85	18	0	0	0	0	0	0	0	0	0	0	103
07:00	1	**242**	**35**	**2**	1	0	0	0	0	0	0	0	0	**281**
08:00	0	130	14	1	**2**	0	0	0	0	0	0	0	0	147
09:00	**2**	118	24	1	1	0	0	0	0	0	0	0	0	146
10:00	0	117	16	0	0	0	0	**1**	0	0	0	0	0	134
11:00	0	116	15	0	2	**1**	0	0	0	0	0	0	0	134
12 PM	0	176	17	0	**4**	0	**1**	**1**	0	0	0	0	0	199
13:00	0	128	16	0	3	**1**	0	0	0	0	0	0	0	148
14:00	2	**282**	**28**	0	1	0	0	0	0	0	0	0	0	**313**
15:00	0	181	27	0	0	0	0	0	0	0	0	0	0	208
16:00	**4**	209	13	0	0	0	0	0	0	0	0	0	0	226
17:00	1	183	15	0	1	0	0	0	0	0	0	0	0	200
18:00	1	142	16	0	0	0	0	0	0	0	0	0	0	159
19:00	2	121	12	0	0	1	0	1	0	0	0	0	0	137
20:00	0	82	4	0	0	0	0	0	0	0	0	0	0	86
21:00	0	103	13	0	0	0	0	0	0	0	0	0	0	116
22:00	0	53	2	0	0	0	0	0	0	0	0	0	0	55
23:00	0	34	2	0	0	0	0	0	0	0	0	0	0	36
Day Total	13	2572	298	4	15	3	1	3	0	0	0	0	0	2909
Percent	0.4%	88.4%	10.2%	0.1%	0.5%	0.1%	0.0%	0.1%	0.0%	0.0%	0.0%	0.0%	0.0%	
AM Peak	09:00	07:00	07:00	07:00	08:00	11:00		10:00						07:00
Vol.	2	242	35	2	2	1		1						281
PM Peak	16:00	14:00	14:00		12:00	13:00	12:00	12:00						14:00
Vol.	4	282	28		4	1	1	1						313

Location : West Road South of
Location : Crosby Street
City/State: Milford, NH
Counter : 13735
Northbound

Accurate Counts
978-664-2565

517840C2
Site Code: 51784002

Start Time	Bikes	Cars & Trailers	2 Axle Long	Buses	2 Axle 6 Tire	3 Axle Single	4 Axle Single	<5 Axl Double	5 Axle Double	>6 Axl Double	<6 Axl Multi	6 Axle Multi	>6 Axl Multi	Total
05/20/06	0	19	0	0	0	0	0	0	0	0	0	0	0	19
01:00	0	6	0	0	0	0	0	0	0	0	0	0	0	6
02:00	0	7	0	0	0	0	0	0	0	0	0	0	0	7
03:00	0	3	0	0	0	0	0	0	0	0	0	0	0	3
04:00	0	11	0	0	0	0	0	0	0	0	0	0	0	11
05:00	0	18	5	0	0	0	0	0	0	0	0	0	0	23
06:00	0	37	6	0	**1**	0	0	0	0	0	0	0	0	44
07:00	0	85	11	0	0	0	0	0	0	0	0	0	0	96
08:00	2	134	18	0	0	**1**	0	0	0	0	0	0	0	155
09:00	1	160	17	**2**	0	0	0	0	0	0	0	0	0	180
10:00	2	160	**28**	0	0	0	0	0	0	0	0	0	0	190
11:00	**4**	**176**	14	0	1	0	0	0	0	0	0	0	0	**195**
12 PM	1	**164**	19	0	**2**	0	0	**1**	0	0	0	0	0	**187**
13:00	1	130	**24**	0	0	0	0	1	0	0	0	0	0	156
14:00	1	123	10	0	0	0	0	0	0	0	0	0	0	134
15:00	**5**	154	12	**2**	0	0	0	0	0	0	0	0	0	173
16:00	1	133	13	0	0	0	0	0	0	0	0	0	0	147
17:00	0	116	16	0	0	0	0	0	0	0	0	0	0	132
18:00	2	103	7	0	0	0	0	0	0	0	0	0	0	112
19:00	0	137	7	0	0	0	0	0	0	0	0	0	0	144
20:00	0	59	5	0	1	0	0	0	0	0	0	0	0	65
21:00	0	53	5	0	0	0	0	0	0	0	0	0	0	58
22:00	0	38	7	0	0	0	0	0	0	0	0	0	0	45
23:00	0	26	0	0	0	0	0	0	0	0	0	0	0	26
Day Total	20	2052	224	4	5	1	0	2	0	0	0	0	0	2308
Percent	0.9%	88.9%	9.7%	0.2%	0.2%	0.0%	0.0%	0.1%	0.0%	0.0%	0.0%	0.0%	0.0%	
AM Peak	11:00	11:00	10:00	09:00	06:00	08:00								11:00
Vol.	4	176	28	2	1	1								195
PM Peak	15:00	12:00	13:00	15:00	12:00			12:00						12:00
Vol.	5	164	24	2	2			1						187

Location : West Road South of
Location : Crosby Street
City/State: Milford, NH
Counter : 13735
Northbound

Accurate Counts
978-664-2565

517840C2
Site Code: 51784002

Start Time	Bikes	Cars & Trailers	2 Axle Long	Buses	2 Axle 6 Tire	3 Axle Single	4 Axle Single	<5 Axl Double	5 Axle Double	>6 Axl Double	<6 Axl Multi	6 Axle Multi	>6 Axl Multi	Total
05/21/06	0	10	1	0	0	0	0	0	0	0	0	0	0	11
01:00	0	11	0	0	0	0	0	0	0	0	0	0	0	11
02:00	0	9	0	0	0	0	0	0	0	0	0	0	0	9
03:00	0	5	1	0	0	0	0	0	0	0	0	0	0	6
04:00	0	6	0	0	0	0	0	0	0	0	0	0	0	6
05:00	0	16	3	0	**1**	0	0	0	0	0	0	0	0	20
06:00	0	15	4	0	0	0	0	0	0	0	0	0	0	19
07:00	0	39	5	0	0	0	0	0	0	0	0	0	0	44
08:00	0	57	**12**	**1**	0	0	0	0	0	0	0	0	0	70
09:00	0	113	11	0	0	0	0	0	0	0	0	0	0	124
10:00	**3**	103	6	0	1	0	0	0	0	0	0	0	0	113
11:00	2	**131**	11	0	0	0	0	0	0	0	0	0	0	**144**
12 PM	**5**	**154**	12	0	**1**	0	0	0	**1**	0	0	0	0	**173**
13:00	1	120	9	0	0	0	0	0	0	0	0	0	0	130
14:00	0	130	11	**3**	0	0	0	0	0	0	0	0	0	144
15:00	2	116	8	0	0	0	0	0	0	0	0	0	0	126
16:00	1	103	**14**	0	0	0	0	0	0	0	0	0	0	118
17:00	2	98	8	0	0	0	0	0	0	0	0	0	0	108
18:00	1	73	7	0	1	0	0	0	0	0	0	0	0	82
19:00	0	102	9	1	0	0	0	0	0	0	0	0	0	112
20:00	2	65	7	0	0	0	0	**1**	0	0	0	0	0	75
21:00	0	27	6	0	1	0	0	0	0	0	0	0	0	34
22:00	0	22	0	0	0	0	0	0	0	0	0	0	0	22
23:00	0	15	1	0	0	0	0	0	0	0	0	0	0	16
Day Total	19	1540	146	5	5	0	0	1	1	0	0	0	0	1717
Percent	1.1%	89.7%	8.5%	0.3%	0.3%	0.0%	0.0%	0.1%	0.1%	0.0%	0.0%	0.0%	0.0%	
AM Peak	10:00	11:00	08:00	08:00	05:00									11:00
Vol.	3	131	12	1	1									144
PM Peak	12:00	12:00	16:00	14:00	12:00			20:00	12:00					12:00
Vol.	5	154	14	3	1			1	1					173

Location : West Road South of
Location : Crosby Street
City/State: Milford, NH
Counter : 13735
Northbound

Accurate Counts
978-664-2565

517840C2
Site Code: 51784002

Start Time	Bikes	Cars & Trailers	2 Axle Long	Buses	2 Axle 6 Tire	3 Axle Single	4 Axle Single	<5 Axl Double	5 Axle Double	>6 Axl Double	<6 Axl Multi	6 Axle Multi	>6 Axl Multi	Total
05/22/06	0	7	0	0	0	0	0	0	0	0	0	0	0	7
01:00	0	5	1	0	0	0	0	0	0	0	0	0	0	6
02:00	0	3	1	0	0	0	0	0	0	0	0	0	0	4
03:00	0	4	2	0	0	0	0	0	0	0	0	0	0	6
04:00	0	14	0	0	0	0	0	0	0	0	0	0	0	14
05:00	0	36	9	0	0	0	0	0	0	0	0	0	0	45
06:00	0	82	15	0	0	0	0	0	0	0	0	0	0	97
07:00	**3**	**219**	**31**	**1**	0	0	0	**1**	0	0	0	0	0	**255**
08:00	0	119	18	1	**1**	0	0	1	0	0	0	0	0	140
09:00	2	102	15	1	1	**2**	0	0	0	0	0	0	0	123
10:00	1	103	10	0	0	0	0	1	0	0	0	0	0	115
11:00	0	119	8	0	0	2	0	1	0	0	0	0	0	130
12 PM	0	148	13	0	3	0	0	0	**2**	0	0	0	0	166
13:00	1	98	17	0	2	**1**	0	1	0	0	0	0	0	120
14:00	2	**260**	18	**2**	**4**	0	0	**3**	0	0	0	0	0	**289**
15:00	2	178	18	0	3	0	0	0	0	0	0	0	0	201
16:00	**4**	172	22	0	1	0	0	1	0	0	0	0	0	200
17:00	4	189	**26**	1	1	0	0	0	0	0	0	0	0	221
18:00	1	134	12	0	0	0	0	0	0	0	0	0	0	147
19:00	2	106	10	0	0	0	0	0	0	0	0	0	0	118
20:00	2	74	8	0	0	0	0	0	0	0	0	0	0	84
21:00	1	61	3	0	0	0	0	0	0	0	0	0	0	65
22:00	0	25	0	0	0	0	0	0	0	0	0	0	0	25
23:00	0	14	1	0	0	0	0	0	0	0	0	0	0	15
Day Total	25	2272	258	6	16	5	0	9	2	0	0	0	0	2593
Percent	1.0%	87.6%	9.9%	0.2%	0.6%	0.2%	0.0%	0.3%	0.1%	0.0%	0.0%	0.0%	0.0%	
AM Peak	07:00	07:00	07:00	07:00	08:00	09:00		07:00						07:00
Vol.	3	219	31	1	1	2		1						255
PM Peak	16:00	14:00	17:00	14:00	14:00	13:00		14:00	12:00					14:00
Vol.	4	260	26	2	4	1		3	2					289

Location : West Road South of
Location : Crosby Street
City/State: Milford, NH
Counter : 13735
Northbound

Accurate Counts
978-664-2565

517840C2
Site Code: 51784002

Start Time	Bikes	Cars & Trailers	2 Axle Long	Buses	2 Axle 6 Tire	3 Axle Single	4 Axle Single	<5 Axl Double	5 Axle Double	>6 Axl Double	<6 Axl Multi	6 Axle Multi	>6 Axl Multi	Total
05/23/06	0	8	2	0	0	0	0	0	0	0	0	0	0	10
01:00	0	3	0	0	0	0	0	0	0	0	0	0	0	3
02:00	0	6	0	0	0	0	0	0	0	0	0	0	0	6
03:00	0	5	0	0	0	0	0	0	0	0	0	0	0	5
04:00	0	15	2	0	0	0	0	0	0	0	0	0	0	17
05:00	0	31	7	0	0	0	0	0	0	0	0	0	0	38
06:00	1	86	10	0	0	**1**	0	0	0	0	0	0	0	98
07:00	1	**225**	**27**	**1**	0	1	0	**1**	0	0	0	0	0	**256**
08:00	1	125	21	1	**6**	0	0	1	0	0	0	0	0	155
09:00	1	109	16	1	0	0	0	0	0	0	0	0	0	127
10:00	1	92	14	0	2	0	0	0	0	0	0	0	0	109
11:00	**2**	102	15	0	1	1	0	0	0	0	0	0	0	121
12 PM	0	151	14	0	0	0	0	0	0	0	0	0	0	165
13:00	0	101	9	0	2	0	0	1	0	0	0	0	0	113
14:00	**6**	**265**	14	**1**	**4**	0	0	**2**	0	0	0	0	0	**292**
15:00	3	194	19	0	0	**1**	0	0	0	0	0	0	0	217
16:00	2	223	**23**	0	4	1	0	1	0	0	0	0	0	254
17:00	4	201	14	0	2	0	0	1	0	0	0	0	0	222
18:00	2	149	14	0	1	0	0	0	0	0	0	0	0	166
19:00	3	128	7	1	1	0	0	0	0	0	0	0	0	140
20:00	1	101	9	1	1	0	0	0	0	0	0	0	0	113
21:00	0	45	6	0	0	0	0	0	0	0	0	0	0	51
22:00	1	31	0	0	0	0	0	0	0	0	0	0	0	32
23:00	0	18	1	0	0	0	0	0	0	0	0	0	0	19
Day Total	29	2414	244	6	24	5	0	7	0	0	0	0	0	2729
Percent	1.1%	88.5%	8.9%	0.2%	0.9%	0.2%	0.0%	0.3%	0.0%	0.0%	0.0%	0.0%	0.0%	
AM Peak	11:00	07:00	07:00	07:00	08:00	06:00		07:00						07:00
Vol.	2	225	27	1	6	1		1						256
PM Peak	14:00	14:00	16:00	14:00	14:00	15:00		14:00						14:00
Vol.	6	265	23	1	4	1		2						292

Location : West Road South of
Location : Crosby Street
City/State: Milford, NH
Counter : 13735
Northbound

Accurate Counts
978-664-2565

517840C2
Site Code: 51784002

Start Time	Bikes	Cars & Trailers	2 Axle Long	Buses	2 Axle 6 Tire	3 Axle Single	4 Axle Single	<5 Axl Double	5 Axle Double	>6 Axl Double	<6 Axl Multi	6 Axle Multi	>6 Axl Multi	Total
05/24/06	1	9	0	0	0	0	0	0	0	0	0	0	0	10
01:00	0	4	0	0	0	0	0	0	0	0	0	0	0	4
02:00	0	3	0	0	0	0	0	0	0	0	0	0	0	3
03:00	0	9	0	0	0	0	0	0	0	0	0	0	0	9
04:00	0	17	2	0	0	0	0	0	0	0	0	0	0	19
05:00	0	30	10	0	0	0	0	0	0	0	0	0	0	40
06:00	1	81	15	0	0	0	0	0	0	0	0	0	0	97
07:00	**2**	**213**	**34**	**1**	0	0	0	0	0	0	0	0	0	**250**
08:00	2	120	14	1	0	0	0	0	0	0	0	0	0	137
09:00	1	124	13	1	0	**1**	0	0	0	0	0	0	0	140
10:00	1	96	12	0	**1**	1	0	0	0	0	0	0	0	111
11:00	1	131	10	1	0	0	0	0	0	0	0	0	0	143
12 PM	1	179	14	0	1	**1**	0	0	0	0	0	0	0	196
13:00	1	130	12	0	1	1	0	0	0	**1**	0	0	0	146
14:00	3	**229**	18	0	**2**	0	0	**2**	**1**	0	0	0	0	**255**
15:00	5	207	16	0	2	1	0	0	0	0	0	0	0	231
16:00	3	201	**19**	0	1	0	0	1	0	0	0	0	0	225
17:00	**8**	193	17	0	1	1	0	0	0	0	0	0	0	220
18:00	2	173	10	0	0	0	0	0	0	0	0	0	0	185
19:00	3	131	13	**1**	1	0	0	0	0	0	0	0	0	149
20:00	2	114	7	0	0	0	0	0	0	0	0	0	0	123
21:00	2	45	4	0	0	0	0	0	0	0	0	0	0	51
22:00	2	37	2	0	0	0	0	0	0	0	0	0	0	41
23:00	0	19	0	0	0	0	0	0	0	0	0	0	0	19
Day Total	41	2495	242	5	10	6	0	3	1	1	0	0	0	2804
Percent	1.5%	89.0%	8.6%	0.2%	0.4%	0.2%	0.0%	0.1%	0.0%	0.0%	0.0%	0.0%	0.0%	
AM Peak	07:00	07:00	07:00	07:00	10:00	09:00								07:00
Vol.	2	213	34	1	1	1								250
PM Peak	17:00	14:00	16:00	19:00	14:00	12:00		14:00	14:00	13:00				14:00
Vol.	8	229	19	1	2	1		2	1	1				255

Location : West Road South of
Location : Crosby Street
City/State: Milford, NH
Counter : 13735
Northbound

Accurate Counts
978-664-2565

517840C2
Site Code: 51784002

Start Time	Bikes	Cars & Trailers	2 Axle Long	Buses	2 Axle 6 Tire	3 Axle Single	4 Axle Single	<5 Axl Double	5 Axle Double	>6 Axl Double	<6 Axl Multi	6 Axle Multi	>6 Axl Multi	Total
05/25/06	2	3	1	0	0	0	0	0	0	0	0	0	0	6
01:00	0	4	0	0	0	0	0	0	0	0	0	0	0	4
02:00	0	4	0	0	0	0	0	0	0	0	0	0	0	4
03:00	0	3	0	0	0	0	0	0	0	0	0	0	0	3
04:00	0	11	2	0	0	0	0	0	0	0	0	0	0	13
05:00	1	41	9	0	0	0	0	0	0	0	0	0	0	51
06:00	1	72	13	0	0	0	0	0	0	0	0	0	0	86
07:00	**4**	**242**	**31**	**1**	0	0	0	0	0	0	0	0	0	**278**
08:00	2	107	16	1	**1**	0	0	0	0	0	0	0	0	127
09:00	4	109	17	1	1	**2**	0	0	0	0	0	0	0	134
10:00	2	114	10	0	1	1	0	**1**	0	0	0	0	0	129
11:00	4	145	14	1	1	0	0	1	0	0	0	0	0	166
12 PM	3	163	14	**1**	**2**	1	0	0	0	0	0	0	0	184
13:00	2	129	10	0	2	0	0	0	0	0	0	0	0	143
14:00	6	**262**	20	0	0	0	0	0	0	0	0	0	0	**288**
15:00	3	203	22	0	1	0	0	**1**	0	0	0	0	0	230
16:00	4	218	28	0	2	**2**	0	0	**1**	0	0	0	0	255
17:00	6	246	**31**	1	0	1	0	0	0	0	0	0	0	285
18:00	**14**	170	16	0	0	0	0	0	0	0	0	0	0	200
19:00	8	148	15	1	0	0	0	1	0	0	0	0	0	173
20:00	12	112	16	0	0	0	0	0	0	0	0	0	0	140
21:00	11	130	7	0	0	1	0	0	0	0	0	0	0	149
22:00	4	41	2	0	0	0	0	0	0	0	0	0	0	47
23:00	2	19	0	0	0	0	0	0	0	0	0	0	0	21
Day Total	95	2696	294	7	11	8	0	4	1	0	0	0	0	3116
Percent	3.0%	86.5%	9.4%	0.2%	0.4%	0.3%	0.0%	0.1%	0.0%	0.0%	0.0%	0.0%	0.0%	
AM Peak	07:00	07:00	07:00	07:00	08:00	09:00		10:00						07:00
Vol.	4	242	31	1	1	2		1						278
PM Peak	18:00	14:00	17:00	12:00	12:00	16:00		15:00	16:00					14:00
Vol.	14	262	31	1	2	2		1	1					288

Location : West Road South of
Location : Crosby Street
City/State: Milford, NH
Counter : 13735
Northbound

Accurate Counts
978-664-2565

517840C2
Site Code: 51784002

Start Time	Bikes	Cars & Trailers	2 Axle Long	Buses	2 Axle 6 Tire	3 Axle Single	4 Axle Single	<5 Axl Double	5 Axle Double	>6 Axl Double	<6 Axl Multi	6 Axle Multi	>6 Axl Multi	Total
05/26/06	2	16	1	0	**1**	0	0	0	0	0	0	0	0	20
01:00	1	3	0	0	0	0	0	0	0	0	0	0	0	4
02:00	0	5	0	0	0	0	0	0	0	0	0	0	0	5
03:00	1	12	0	0	0	0	0	0	0	0	0	0	0	13
04:00	2	13	0	0	0	0	0	0	0	0	0	0	0	15
05:00	1	34	5	0	1	0	0	0	0	0	0	0	0	41
06:00	6	74	14	0	0	0	0	0	**1**	0	0	0	0	95
07:00	**9**	**215**	**25**	0	1	**1**	0	**1**	0	0	0	0	0	**252**
08:00	8	110	17	**1**	0	0	0	0	1	0	0	0	0	137
09:00	2	100	14	0	1	0	0	0	0	0	0	0	0	117
10:00	3	123	22	0	0	0	0	0	1	0	0	0	0	149
11:00	3	154	10	0	0	1	0	0	0	0	0	0	0	168
12 PM	3	129	16	**1**	1	**1**	0	**1**	0	0	0	0	0	152
13:00	2	157	25	0	**3**	1	0	0	0	0	0	0	0	188
14:00	10	**238**	**27**	0	2	1	0	0	**1**	0	0	0	0	**279**
15:00	10	171	24	0	2	0	0	1	0	0	0	0	0	208
16:00	**17**	200	21	0	0	1	0	0	0	0	0	0	0	239
17:00	14	162	15	0	0	0	0	0	0	**1**	0	0	0	192
18:00	8	132	8	0	0	0	0	0	0	0	0	0	0	148
19:00	4	93	8	0	0	0	0	0	0	0	0	0	0	105
20:00	0	85	4	0	0	0	0	0	0	0	0	0	0	89
21:00	6	72	4	0	1	0	0	0	0	0	0	0	0	83
22:00	3	29	1	0	1	0	0	0	0	0	0	0	0	34
23:00	0	30	1	0	0	0	0	0	0	0	0	0	0	31
Day Total	115	2357	262	2	14	6	0	3	4	1	0	0	0	2764
Percent	4.2%	85.3%	9.5%	0.1%	0.5%	0.2%	0.0%	0.1%	0.1%	0.0%	0.0%	0.0%	0.0%	
AM Peak	07:00	07:00	07:00	08:00	00:00	07:00		07:00	06:00					07:00
Vol.	9	215	25	1	1	1		1	1					252
PM Peak	16:00	14:00	14:00	12:00	13:00	12:00		12:00	14:00	17:00				14:00
Vol.	17	238	27	1	3	1		1	1	1				279

Location : West Road South of
Location : Crosby Street
City/State: Milford, NH
Counter : 13735
Northbound

Accurate Counts
978-664-2565

517840C2
Site Code: 51784002

Start Time	Bikes	Cars & Trailers	2 Axle Long	Buses	2 Axle 6 Tire	3 Axle Single	4 Axle Single	<5 Axl Double	5 Axle Double	>6 Axl Double	<6 Axl Multi	6 Axle Multi	>6 Axl Multi	Total
05/27/06	1	13	2	0	0	0	0	0	0	0	0	0	0	16
01:00	2	10	0	0	0	0	0	0	0	0	0	0	0	12
02:00	0	7	0	0	0	0	0	0	0	0	0	0	0	7
03:00	1	5	0	0	0	0	0	0	0	0	0	0	0	6
04:00	0	8	1	0	0	0	0	0	0	0	0	0	0	9
05:00	1	19	3	0	0	0	0	0	0	0	0	0	0	23
06:00	0	32	10	0	0	0	0	**1**	0	0	0	0	0	43
07:00	0	74	7	0	0	0	0	0	0	0	0	0	0	81
08:00	**4**	84	**18**	**2**	0	0	0	1	0	0	0	0	0	109
09:00	1	137	15	0	0	**1**	0	0	0	0	0	0	0	154
10:00	4	**164**	11	0	**2**	0	0	1	0	0	0	0	0	**182**
11:00	3	158	15	0	0	0	0	0	0	0	0	0	0	176
12 PM	2	117	7	0	1	0	0	0	0	0	0	0	0	127
13:00	4	**143**	8	0	1	**1**	0	0	0	0	0	0	0	**157**
14:00	**5**	115	5	0	0	0	0	**1**	0	0	0	0	0	126
15:00	5	112	**12**	**1**	0	0	0	0	0	0	0	0	0	130
16:00	3	111	9	0	**2**	0	0	0	0	0	0	0	0	125
17:00	5	99	8	1	0	0	0	0	0	0	0	0	0	113
18:00	3	88	6	0	0	0	0	0	0	0	0	0	0	97
19:00	4	72	10	0	0	0	0	0	0	0	0	0	0	86
20:00	3	81	5	0	1	0	0	0	0	0	0	0	0	90
21:00	3	51	2	0	0	0	0	1	0	0	0	0	0	57
22:00	0	61	3	0	0	0	0	0	0	0	0	0	0	64
23:00	1	36	0	0	0	0	0	0	0	0	0	0	0	37
Day Total	55	1797	157	4	7	2	0	5	0	0	0	0	0	2027
Percent	2.7%	88.7%	7.7%	0.2%	0.3%	0.1%	0.0%	0.2%	0.0%	0.0%	0.0%	0.0%	0.0%	
AM Peak	08:00	10:00	08:00	08:00	10:00	09:00		06:00						10:00
Vol.	4	164	18	2	2	1		1						182
PM Peak	14:00	13:00	15:00	15:00	16:00	13:00		14:00						13:00
Vol.	5	143	12	1	2	1		1						157

Location : West Road South of
Location : Crosby Street
City/State: Milford, NH
Counter : 13735
Northbound

Accurate Counts
978-664-2565

517840C2
Site Code: 51784002

Start Time	Bikes	Cars & Trailers	2 Axle Long	Buses	2 Axle 6 Tire	3 Axle Single	4 Axle Single	<5 Axl Double	5 Axle Double	>6 Axl Double	<6 Axl Multi	6 Axle Multi	>6 Axl Multi	Total
05/28/06	1	14	0	0	0	0	0	0	0	0	0	0	0	15
01:00	0	11	0	0	0	0	0	0	0	0	0	0	0	11
02:00	0	4	0	0	0	0	0	0	0	0	0	0	0	4
03:00	0	3	1	0	0	0	0	0	0	0	0	0	0	4
04:00	0	6	1	0	0	0	0	0	0	0	0	0	0	7
05:00	0	17	0	0	**1**	0	0	0	0	0	0	0	0	18
06:00	1	20	3	0	1	0	0	0	0	0	0	0	0	25
07:00	1	57	4	0	0	0	0	0	0	0	0	0	0	62
08:00	0	50	8	0	1	0	0	0	0	0	0	0	0	59
09:00	3	99	10	0	1	0	0	**1**	0	0	0	0	0	114
10:00	**4**	100	**13**	0	0	0	0	0	0	0	0	0	0	117
11:00	2	**113**	10	**1**	0	0	0	0	0	0	0	0	0	**126**
12 PM	2	**148**	5	0	0	0	0	0	0	0	0	0	0	**155**
13:00	4	107	8	0	0	0	0	**1**	0	0	0	0	0	120
14:00	1	79	**9**	0	1	0	0	0	0	0	0	0	0	90
15:00	**5**	83	6	0	1	0	0	0	0	0	0	0	0	95
16:00	2	66	3	0	0	0	0	0	0	0	0	0	0	71
17:00	3	77	8	0	1	0	0	0	0	0	0	0	0	89
18:00	5	82	6	0	**2**	0	0	0	0	0	0	0	0	95
19:00	1	84	5	0	0	0	0	0	0	0	0	0	0	90
20:00	3	61	4	0	0	0	0	0	0	0	0	0	0	68
21:00	0	38	5	0	0	0	0	0	0	0	0	0	0	43
22:00	0	34	0	0	0	0	0	0	0	0	0	0	0	34
23:00	0	29	2	0	1	0	0	0	0	0	0	0	0	32
Day Total	38	1382	111	1	10	0	0	2	0	0	0	0	0	1544
Percent	2.5%	89.5%	7.2%	0.1%	0.6%	0.0%	0.0%	0.1%	0.0%	0.0%	0.0%	0.0%	0.0%	
AM Peak	10:00	11:00	10:00	11:00	05:00			09:00						11:00
Vol.	4	113	13	1	1			1						126
PM Peak	15:00	12:00	14:00		18:00			13:00						12:00
Vol.	5	148	9		2			1						155

Location : West Road South of
Location : Crosby Street
City/State: Milford, NH
Counter : 13735
Northbound

Accurate Counts
978-664-2565

517840C2
Site Code: 51784002

Start Time	Bikes	Cars & Trailers	2 Axle Long	Buses	2 Axle 6 Tire	3 Axle Single	4 Axle Single	<5 Axl Double	5 Axle Double	>6 Axl Double	<6 Axl Multi	6 Axle Multi	>6 Axl Multi	Total
05/29/06	0	19	1	0	0	0	0	0	0	0	0	0	0	20
01:00	0	12	0	0	0	0	0	0	0	0	0	0	0	12
02:00	0	4	0	0	0	0	0	0	0	0	0	0	0	4
03:00	0	4	0	0	0	0	0	0	0	0	0	0	0	4
04:00	0	5	0	0	0	0	0	0	0	0	0	0	0	5
05:00	0	17	2	0	0	0	0	0	0	0	0	0	0	19
06:00	0	24	2	0	0	0	0	0	0	0	0	0	0	26
07:00	1	33	6	0	0	0	0	0	0	0	0	0	0	40
08:00	1	59	1	0	0	0	0	0	0	0	0	0	0	61
09:00	0	108	**9**	0	0	0	0	0	0	0	0	0	0	117
10:00	1	59	1	0	**1**	0	0	0	0	0	0	0	0	62
11:00	**4**	**112**	7	0	0	0	0	0	0	0	0	0	0	**123**
12 PM	1	**127**	**19**	0	**2**	0	0	0	0	0	0	0	0	**149**
13:00	**10**	93	7	0	1	0	0	0	0	0	0	0	0	111
14:00	2	75	8	0	0	0	0	0	0	0	0	0	0	85
15:00	3	93	6	0	2	0	0	0	0	0	0	0	0	104
16:00	1	83	5	0	0	0	0	0	0	0	0	0	0	89
17:00	2	89	8	0	0	0	0	0	0	0	0	0	0	99
18:00	2	99	9	0	1	0	0	0	0	0	0	0	0	111
19:00	1	92	5	0	0	0	0	0	0	0	0	0	0	98
20:00	3	66	5	0	1	0	0	0	0	0	0	0	0	75
21:00	2	46	2	0	0	0	0	0	0	0	0	0	0	50
22:00	0	17	1	0	0	0	0	0	0	0	0	0	0	18
23:00	1	12	1	0	0	0	0	0	0	0	0	0	0	14
Day Total	35	1348	105	0	8	0	0	0	0	0	0	0	0	1496
Percent	2.3%	90.1%	7.0%	0.0%	0.5%	0.0%	0.0%	0.0%	0.0%	0.0%	0.0%	0.0%	0.0%	
AM Peak	11:00	11:00	09:00		10:00									11:00
Vol.	4	112	9		1									123
PM Peak	13:00	12:00	12:00		12:00									12:00
Vol.	10	127	19		2									149

Location : West Road South of
Location : Crosby Street
City/State: Milford, NH
Counter : 13735
Northbound

Accurate Counts
978-664-2565

517840C2
Site Code: 51784002

Start Time	Bikes	Cars & Trailers	2 Axle Long	Buses	2 Axle 6 Tire	3 Axle Single	4 Axle Single	<5 Axl Double	5 Axle Double	>6 Axl Double	<6 Axl Multi	6 Axle Multi	>6 Axl Multi	Total
05/30/06	1	3	0	0	0	0	0	0	0	0	0	0	0	4
01:00	0	3	0	0	0	0	0	0	0	0	0	0	0	3
02:00	0	4	0	0	0	0	0	0	0	0	0	0	0	4
03:00	0	5	0	0	0	0	0	0	0	0	0	0	0	5
04:00	0	13	1	0	0	0	0	0	0	0	0	0	0	14
05:00	0	38	11	0	1	1	0	0	0	0	0	0	0	51
06:00	2	95	10	0	1	0	0	0	0	0	0	0	0	108
07:00	**4**	**239**	**21**	**1**	1	**2**	0	0	0	0	0	0	0	**268**
08:00	0	119	3	0	1	0	0	**1**	0	0	0	0	0	124
09:00	0	114	13	0	**3**	0	0	1	0	0	0	0	0	131
10:00	0	98	12	0	0	0	0	0	0	0	0	0	0	110
11:00	2	121	11	0	0	2	0	1	0	0	0	0	0	137
12 PM	2	154	11	0	1	0	0	1	0	0	0	0	0	169
13:00	0	103	10	0	3	0	0	0	0	0	0	0	0	116
14:00	2	**247**	16	**2**	**4**	**1**	0	0	0	**1**	0	0	0	**273**
15:00	1	188	**19**	2	0	0	0	**2**	0	0	0	0	0	212
16:00	1	181	11	0	1	0	0	1	0	0	0	0	0	195
17:00	**4**	160	13	0	0	0	0	0	0	0	0	0	0	177
18:00	3	139	14	0	0	0	0	0	0	0	0	0	0	156
19:00	3	120	8	0	0	0	0	0	0	0	0	0	0	131
20:00	1	77	7	0	0	1	0	0	0	0	0	0	0	86
21:00	2	44	2	0	0	0	0	0	0	0	0	0	0	48
22:00	2	25	0	0	0	0	0	0	0	0	0	0	0	27
23:00	0	12	1	0	0	0	0	0	0	0	0	0	0	13
Day Total	30	2302	194	5	16	7	0	7	0	1	0	0	0	2562
Percent	1.2%	89.9%	7.6%	0.2%	0.6%	0.3%	0.0%	0.3%	0.0%	0.0%	0.0%	0.0%	0.0%	
AM Peak	07:00	07:00	07:00	07:00	09:00	07:00		08:00						07:00
Vol.	4	239	21	1	3	2		1						268
PM Peak	17:00	14:00	15:00	14:00	14:00	14:00		15:00		14:00				14:00
Vol.	4	247	19	2	4	1		2		1				273

Location : West Road South of
Location : Crosby Street
City/State: Milford, NH
Counter : 13735

Accurate Counts
978-664-2565

517840C2
Site Code: 51784002

Northbound

Start Time	Bikes	Cars & Trailers	2 Axle Long	Buses	2 Axle 6 Tire	3 Axle Single	4 Axle Single	<5 Axl Double	5 Axle Double	>6 Axl Double	<6 Axl Multi	6 Axle Multi	>6 Axl Multi	Total
05/31/06	0	6	0	0	0	0	0	0	0	0	0	0	0	6
01:00	0	2	1	0	0	0	0	0	0	0	0	0	0	3
02:00	0	1	0	0	0	0	0	0	0	0	0	0	0	1
03:00	0	10	0	0	0	0	0	0	0	0	0	0	0	10
04:00	0	11	3	0	0	0	0	0	0	0	0	0	0	14
05:00	0	30	9	0	1	0	0	0	0	0	0	0	0	40
06:00	**4**	92	10	0	0	0	0	0	0	0	0	0	0	106
07:00	2	**240**	**21**	0	2	**1**	0	0	0	0	0	0	0	**266**
08:00	1	123	13	**1**	**3**	1	0	**1**	0	0	0	0	0	143
09:00	0	126	15	1	2	0	0	0	0	0	0	0	0	144
10:00	1	93	4	0	0	1	0	0	0	0	0	0	0	99
11:00	0	109	8	0	2	0	0	0	0	0	0	0	0	119
12 PM	1	157	13	0	1	0	0	0	0	0	0	0	0	172
13:00	2	134	11	0	1	**1**	0	0	0	0	0	0	0	149
14:00	2	**310**	16	**2**	0	0	0	**1**	0	0	0	0	0	**331**
15:00	3	211	20	0	**3**	1	0	0	0	0	0	0	0	238
16:00	**8**	185	13	0	1	1	0	0	0	0	0	0	0	208
17:00	7	183	**23**	0	1	0	0	0	0	0	0	0	0	214
18:00	4	178	11	0	1	1	0	0	0	0	0	0	0	195
19:00	6	148	8	0	1	1	0	0	0	0	0	0	0	164
20:00	6	133	6	0	1	0	0	0	0	0	0	0	0	146
21:00	5	125	6	0	0	1	0	0	0	0	0	0	0	137
22:00	2	30	1	0	1	0	0	0	0	0	0	0	0	34
23:00	1	21	1	0	0	0	0	0	0	0	0	0	0	23
Day Total	55	2658	213	4	21	9	0	2	0	0	0	0	0	2962
Percent	1.9%	89.7%	7.2%	0.1%	0.7%	0.3%	0.0%	0.1%	0.0%	0.0%	0.0%	0.0%	0.0%	
AM Peak	06:00	07:00	07:00	08:00	08:00	07:00		08:00						07:00
Vol.	4	240	21	1	3	1		1						266
PM Peak	16:00	14:00	17:00	14:00	15:00	13:00		14:00						14:00
Vol.	8	310	23	2	3	1		1						331

Location : West Road South of
Location : Crosby Street
City/State: Milford, NH
Counter : 13735
Northbound

Accurate Counts
978-664-2565

517840C2
Site Code: 51784002

Start Time	Bikes	Cars & Trailers	2 Axle Long	Buses	2 Axle 6 Tire	3 Axle Single	4 Axle Single	<5 Axl Double	5 Axle Double	>6 Axl Double	<6 Axl Multi	6 Axle Multi	>6 Axl Multi	Total
06/01/06	0	8	0	0	0	0	0	0	0	0	0	0	0	8
01:00	0	6	0	0	0	0	0	0	0	0	0	0	0	6
02:00	0	3	0	0	0	0	0	0	0	0	0	0	0	3
03:00	0	4	1	0	0	0	0	0	0	0	0	0	0	5
04:00	0	11	2	0	0	0	0	0	0	0	0	0	0	13
05:00	0	36	7	0	0	1	0	**1**	0	0	0	0	0	45
06:00	1	87	8	0	0	0	0	0	**1**	0	0	0	0	97
07:00	2	**235**	**26**	**2**	**1**	**2**	0	0	0	0	0	0	0	**268**
08:00	2	112	12	1	1	0	0	0	0	0	0	0	0	128
09:00	2	137	12	0	0	0	0	0	1	0	0	0	0	152
10:00	2	154	17	0	1	0	**1**	0	0	0	0	0	0	175
11:00	**3**	137	11	0	0	0	0	0	0	0	0	0	0	151
12 PM	1	166	9	0	**3**	1	0	0	0	0	0	0	0	180
13:00	1	108	10	**1**	0	0	0	0	0	0	0	0	0	120
14:00	2	**280**	19	0	3	**2**	0	0	0	0	0	0	0	**306**
15:00	2	196	11	0	1	0	0	0	0	0	0	0	0	210
16:00	**3**	202	12	0	1	0	0	0	0	0	0	0	0	218
17:00	2	189	**23**	0	0	0	0	0	0	0	0	0	0	214
18:00	3	163	11	0	0	0	0	0	0	0	0	0	0	177
19:00	2	145	8	0	0	0	0	0	0	0	0	0	0	155
20:00	2	25	4	0	0	0	0	0	0	0	0	0	0	31
21:00	0	3	0	0	0	0	0	0	0	0	0	0	0	3
22:00	0	0	0	0	0	0	0	0	0	0	0	0	0	0
23:00	0	0	0	0	0	0	0	0	0	0	0	0	0	0
Day Total	30	2407	203	4	11	6	1	1	2	0	0	0	0	2665
Percent	1.1%	90.3%	7.6%	0.2%	0.4%	0.2%	0.0%	0.0%	0.1%	0.0%	0.0%	0.0%	0.0%	
AM Peak	11:00	07:00	07:00	07:00	07:00	07:00	10:00	05:00	06:00					07:00
Vol.	3	235	26	2	1	2	1	1	1					268
PM Peak	16:00	14:00	17:00	13:00	12:00	14:00								14:00
Vol.	3	280	23	1	3	2								306

Location : West Road South of
Location : Crosby Street
City/State: Milford, NH
Counter : 13735
Northbound

Accurate Counts
978-664-2565

517840C2
Site Code: 51784002

Start Time	Bikes	Cars & Trailers	2 Axle Long	Buses	2 Axle 6 Tire	3 Axle Single	4 Axle Single	<5 Axl Double	5 Axle Double	>6 Axl Double	<6 Axl Multi	6 Axle Multi	>6 Axl Multi	Total
06/02/06	0	0	0	0	0	0	0	0	0	0	0	0	0	0
01:00	0	0	0	0	0	0	0	0	0	0	0	0	0	0
02:00	0	0	0	0	0	0	0	0	0	0	0	0	0	0
03:00	0	0	0	0	0	0	0	0	0	0	0	0	0	0
04:00	0	0	0	0	0	0	0	0	0	0	0	0	0	0
05:00	0	0	0	0	0	0	0	0	0	0	0	0	0	0
06:00	0	0	0	0	0	0	0	0	0	0	0	0	0	0
07:00	0	0	0	0	0	0	0	0	0	0	0	0	0	0
08:00	0	0	0	0	0	0	0	0	0	0	0	0	0	0
09:00	0	0	0	0	0	0	0	0	0	0	0	0	0	0
10:00	0	0	0	0	0	0	0	0	0	0	0	0	0	0
11:00	0	0	0	0	0	0	0	0	0	0	0	0	0	0
12 PM	0	0	0	0	0	0	0	0	0	0	0	0	0	0
13:00	0	0	0	0	0	0	0	0	0	0	0	0	0	0
14:00	0	0	0	0	0	0	0	0	0	0	0	0	0	0
15:00	0	1	0	0	0	0	0	0	0	0	0	0	0	1
16:00	0	**3**	0	0	0	0	0	0	0	0	0	0	0	**3**
17:00	0	1	0	0	0	0	0	0	0	0	0	0	0	1
18:00	0	1	0	0	0	0	0	0	0	0	0	0	0	1
19:00	0	0	0	0	0	0	0	0	0	0	0	0	0	0
20:00	0	0	0	0	0	0	0	0	0	0	0	0	0	0
21:00	0	0	0	0	0	0	0	0	0	0	0	0	0	0
22:00	0	0	0	0	0	0	0	0	0	0	0	0	0	0
23:00	0	0	0	0	0	0	0	0	0	0	0	0	0	0
Day Total	0	6	0	0	0	0	0	0	0	0	0	0	0	6
Percent	0.0%	100.0%	0.0%	0.0%	0.0%	0.0%	0.0%	0.0%	0.0%	0.0%	0.0%	0.0%	0.0%	
AM Peak Vol.														
PM Peak Vol.		16:00 3												16:00 3

Location : West Road South of
Location : Crosby Street
City/State: Milford, NH
Counter : 13735
Northbound

Accurate Counts
978-664-2565

517840C2
Site Code: 51784002

Start Time	Bikes	Cars & Trailers	2 Axle Long	Buses	2 Axle 6 Tire	3 Axle Single	4 Axle Single	<5 Axl Double	5 Axle Double	>6 Axl Double	<6 Axl Multi	6 Axle Multi	>6 Axl Multi	Total
06/03/06	0	0	0	0	0	0	0	0	0	0	0	0	0	0
01:00	0	0	0	0	0	0	0	0	0	0	0	0	0	0
02:00	0	0	0	0	0	0	0	0	0	0	0	0	0	0
03:00	0	0	0	0	0	0	0	0	0	0	0	0	0	0
04:00	0	0	0	0	0	0	0	0	0	0	0	0	0	0
05:00	0	0	0	0	0	0	0	0	0	0	0	0	0	0
06:00	0	0	0	0	0	0	0	0	0	0	0	0	0	0
07:00	0	0	0	0	0	0	0	0	0	0	0	0	0	0
08:00	0	0	0	0	0	0	0	0	0	0	0	0	0	0
09:00	0	0	0	0	0	0	0	0	0	0	0	0	0	0
10:00	0	0	0	0	0	0	0	0	0	0	0	0	0	0
11:00	0	**1**	0	0	0	0	0	0	0	0	0	0	0	**1**
12 PM	0	0	0	0	0	0	0	0	0	0	0	0	0	0
13:00	0	0	0	0	0	0	0	0	0	0	0	0	0	0
14:00	0	0	0	0	0	0	0	0	0	0	0	0	0	0
15:00	0	0	0	0	0	0	0	0	0	0	0	0	0	0
16:00	0	0	0	0	0	0	0	0	0	0	0	0	0	0
17:00	0	0	0	0	0	0	0	0	0	0	0	0	0	0
18:00	0	0	0	0	0	0	0	0	0	0	0	0	0	0
19:00	0	0	0	0	0	0	0	0	0	0	0	0	0	0
20:00	0	0	0	0	0	0	0	0	0	0	0	0	0	0
21:00	0	0	0	0	0	0	0	0	0	0	0	0	0	0
22:00	0	0	0	0	0	0	0	0	0	0	0	0	0	0
23:00	0	0	0	0	0	0	0	0	0	0	0	0	0	0
Day Total	0	1	0	0	0	0	0	0	0	0	0	0	0	1
Percent	0.0%	100.0%	0.0%	0.0%	0.0%	0.0%	0.0%	0.0%	0.0%	0.0%	0.0%	0.0%	0.0%	
AM Peak		11:00												11:00
Vol.		1												1
PM Peak														
Vol.														

Location : West Road South of
Location : Crosby Street
City/State: Milford, NH
Counter : 13735
Northbound

Accurate Counts
978-664-2565

517840C2
Site Code: 51784002

Start Time	Bikes	Cars & Trailers	2 Axle Long	Buses	2 Axle 6 Tire	3 Axle Single	4 Axle Single	<5 Axl Double	5 Axle Double	>6 Axl Double	<6 Axl Multi	6 Axle Multi	>6 Axl Multi	Total
06/04/06	0	0	0	0	0	0	0	0	0	0	0	0	0	0
01:00	0	0	0	0	0	0	0	0	0	0	0	0	0	0
02:00	0	0	0	0	0	0	0	0	0	0	0	0	0	0
03:00	0	0	0	0	0	0	0	0	0	0	0	0	0	0
04:00	0	0	0	0	0	0	0	0	0	0	0	0	0	0
05:00	0	0	0	0	0	0	0	0	0	0	0	0	0	0
06:00	0	0	0	0	0	0	0	0	0	0	0	0	0	0
07:00	0	0	0	0	0	0	0	0	0	0	0	0	0	0
08:00	0	0	0	0	0	0	0	0	0	0	0	0	0	0
09:00	0	0	0	0	0	0	0	0	0	0	0	0	0	0
10:00	0	0	0	0	0	0	0	0	0	0	0	0	0	0
11:00	0	0	0	0	0	0	0	0	0	0	0	0	0	0
12 PM	0	0	0	0	0	0	0	0	0	0	0	0	0	0
13:00	0	0	0	0	0	0	0	0	0	0	0	0	0	0
14:00	0	0	0	0	0	0	0	0	0	0	0	0	0	0
15:00	0	0	0	0	0	0	0	0	0	0	0	0	0	0
16:00	0	0	0	0	0	0	0	0	0	0	0	0	0	0
17:00	0	0	0	0	0	0	0	0	0	0	0	0	0	0
18:00	0	0	0	0	0	0	0	0	0	0	0	0	0	0
19:00	0	0	0	0	0	0	0	0	0	0	0	0	0	0
20:00	0	0	0	0	0	0	0	0	0	0	0	0	0	0
21:00	0	0	0	0	0	0	0	0	0	0	0	0	0	0
22:00	0	0	0	0	0	0	0	0	0	0	0	0	0	0
23:00	0	0	0	0	0	0	0	0	0	0	0	0	0	0
Day Total	0	0	0	0	0	0	0	0	0	0	0	0	0	0
Percent	0.0%	0.0%	0.0%	0.0%	0.0%	0.0%	0.0%	0.0%	0.0%	0.0%	0.0%	0.0%	0.0%	
AM Peak Vol.														
PM Peak Vol.														

Location : West Road South of
Location : Crosby Street
City/State: Milford, NH
Counter : 13735
Northbound

Accurate Counts
978-664-2565

517840C2
Site Code: 51784002

Start Time	Bikes	Cars & Trailers	2 Axle Long	Buses	2 Axle 6 Tire	3 Axle Single	4 Axle Single	<5 Axl Double	5 Axle Double	>6 Axl Double	<6 Axl Multi	6 Axle Multi	>6 Axl Multi	Total
06/05/06	0	0	0	0	0	0	0	0	0	0	0	0	0	0
01:00	0	0	0	0	0	0	0	0	0	0	0	0	0	0
02:00	0	0	0	0	0	0	0	0	0	0	0	0	0	0
03:00	0	0	0	0	0	0	0	0	0	0	0	0	0	0
04:00	0	0	0	0	0	0	0	0	0	0	0	0	0	0
05:00	0	**2**	0	0	0	0	0	0	0	0	0	0	0	**2**
06:00	*	*	*	*	*	*	*	*	*	*	*	*	*	*
07:00	*	*	*	*	*	*	*	*	*	*	*	*	*	*
08:00	*	*	*	*	*	*	*	*	*	*	*	*	*	*
09:00	*	*	*	*	*	*	*	*	*	*	*	*	*	*
10:00	*	*	*	*	*	*	*	*	*	*	*	*	*	*
11:00	*	*	*	*	*	*	*	*	*	*	*	*	*	*
12 PM	*	*	*	*	*	*	*	*	*	*	*	*	*	*
13:00	*	*	*	*	*	*	*	*	*	*	*	*	*	*
14:00	*	*	*	*	*	*	*	*	*	*	*	*	*	*
15:00	*	*	*	*	*	*	*	*	*	*	*	*	*	*
16:00	*	*	*	*	*	*	*	*	*	*	*	*	*	*
17:00	*	*	*	*	*	*	*	*	*	*	*	*	*	*
18:00	*	*	*	*	*	*	*	*	*	*	*	*	*	*
19:00	*	*	*	*	*	*	*	*	*	*	*	*	*	*
20:00	*	*	*	*	*	*	*	*	*	*	*	*	*	*
21:00	*	*	*	*	*	*	*	*	*	*	*	*	*	*
22:00	*	*	*	*	*	*	*	*	*	*	*	*	*	*
23:00	*	*	*	*	*	*	*	*	*	*	*	*	*	*
Day Total	0	2	0	0	0	0	0	0	0	0	0	0	0	2
Percent	0.0%	100.0%	0.0%	0.0%	0.0%	0.0%	0.0%	0.0%	0.0%	0.0%	0.0%	0.0%	0.0%	
AM Peak		05:00												05:00
Vol.		2												2
PM Peak														
Vol.														
Grand Total	634	32379	3174	61	190	62	2	52	11	3	0	0	0	36568
Percent	1.7%	88.5%	8.7%	0.2%	0.5%	0.2%	0.0%	0.1%	0.0%	0.0%	0.0%	0.0%	0.0%	

Location : West Road South of
Location : Crosby Street
City/State: Milford, NH
Counter : 13735
Southbound, Northbound

Accurate Counts
978-664-2565

517840C2
Site Code: 51784002

Start Time	Bikes	Cars & Trailers	2 Axle Long	Buses	2 Axle 6 Tire	3 Axle Single	4 Axle Single	<5 Axl Double	5 Axle Double	>6 Axl Double	<6 Axl Multi	6 Axle Multi	>6 Axl Multi	Total
05/18/06	*	*	*	*	*	*	*	*	*	*	*	*	*	*
01:00	*	*	*	*	*	*	*	*	*	*	*	*	*	*
02:00	*	*	*	*	*	*	*	*	*	*	*	*	*	*
03:00	*	*	*	*	*	*	*	*	*	*	*	*	*	*
04:00	*	*	*	*	*	*	*	*	*	*	*	*	*	*
05:00	*	*	*	*	*	*	*	*	*	*	*	*	*	*
06:00	*	*	*	*	*	*	*	*	*	*	*	*	*	*
07:00	*	*	*	*	*	*	*	*	*	*	*	*	*	*
08:00	*	*	*	*	*	*	*	*	*	*	*	*	*	*
09:00	*	*	*	*	*	*	*	*	*	*	*	*	*	*
10:00	**3**	192	**46**	0	**10**	**1**	0	**1**	0	0	0	0	0	253
11:00	2	**266**	28	0	9	1	0	0	0	0	0	0	0	**306**
12 PM	7	302	33	0	3	1	0	0	0	0	0	0	0	346
13:00	3	224	39	2	7	2	0	1	0	0	0	0	0	278
14:00	10	**447**	56	**15**	8	0	0	**2**	0	0	0	0	0	**538**
15:00	9	362	45	1	**9**	2	0	0	0	0	0	0	0	428
16:00	4	378	**65**	0	6	0	0	0	0	0	0	0	0	453
17:00	10	439	55	0	4	**3**	0	0	0	0	0	0	0	511
18:00	**16**	384	34	0	3	1	0	0	0	0	0	0	0	438
19:00	4	297	39	0	3	0	0	1	0	0	0	0	0	344
20:00	5	237	29	0	1	0	0	0	0	0	0	0	0	272
21:00	1	172	26	0	0	0	0	0	0	0	0	0	0	199
22:00	2	89	17	0	1	0	0	0	0	0	0	0	0	109
23:00	0	28	9	0	1	0	0	0	0	0	0	0	0	38
Day Total	76	3817	521	18	65	11	0	5	0	0	0	0	0	4513
Percent	1.7%	84.6%	11.5%	0.4%	1.4%	0.2%	0.0%	0.1%	0.0%	0.0%	0.0%	0.0%	0.0%	
AM Peak	10:00	11:00	10:00		10:00	10:00		10:00						11:00
Vol.	3	266	46		10	1		1						306
PM Peak	18:00	14:00	16:00	14:00	15:00	17:00		14:00						14:00
Vol.	16	447	65	15	9	3		2						538

Location : West Road South of
Location : Crosby Street
City/State: Milford, NH
Counter : 13735
Southbound, Northbound

Accurate Counts
978-664-2565

517840C2
Site Code: 51784002

Start Time	Bikes	Cars & Trailers	2 Axle Long	Buses	2 Axle 6 Tire	3 Axle Single	4 Axle Single	<5 Axl Double	5 Axle Double	>6 Axl Double	<6 Axl Multi	6 Axle Multi	>6 Axl Multi	Total
05/19/06	1	25	2	0	0	0	0	0	0	0	0	0	0	28
01:00	0	11	0	0	1	0	0	0	0	0	0	0	0	12
02:00	0	6	1	0	0	0	0	0	0	0	0	0	0	7
03:00	0	7	0	0	0	0	0	0	0	0	0	0	0	7
04:00	0	10	2	0	0	0	0	0	0	0	0	0	0	12
05:00	0	54	17	0	0	0	0	0	0	0	0	0	0	71
06:00	0	158	36	0	0	0	0	0	0	0	0	0	0	194
07:00	**3**	**470**	**83**	**9**	3	**2**	0	**1**	0	0	0	0	0	**571**
08:00	2	243	37	1	**8**	0	0	0	0	0	0	0	0	291
09:00	2	208	42	2	6	0	0	0	0	0	0	0	0	260
10:00	0	187	37	0	2	0	0	1	**1**	0	0	0	0	228
11:00	0	228	37	0	6	1	0	1	0	0	0	0	0	273
12 PM	1	308	46	0	**8**	0	**2**	**1**	0	0	0	0	0	366
13:00	1	252	38	**9**	6	1	0	1	**1**	0	0	0	0	309
14:00	3	**439**	**72**	6	3	0	0	0	0	0	0	0	0	**523**
15:00	0	305	54	1	1	1	0	0	0	0	0	0	0	362
16:00	**4**	384	46	0	1	0	0	0	0	0	0	0	0	435
17:00	2	340	51	0	2	0	0	0	0	0	0	0	0	395
18:00	1	289	39	0	7	0	0	1	1	0	0	0	0	338
19:00	2	254	40	0	2	**3**	0	1	0	0	0	0	0	302
20:00	2	182	24	0	2	0	0	1	0	0	0	0	0	211
21:00	0	178	22	0	3	0	0	0	0	0	0	0	0	203
22:00	0	109	11	0	0	0	0	0	0	0	0	0	0	120
23:00	0	76	7	0	1	0	0	0	0	0	0	0	0	84
Day Total	24	4723	744	28	62	8	2	8	3	0	0	0	0	5602
Percent	0.4%	84.3%	13.3%	0.5%	1.1%	0.1%	0.0%	0.1%	0.1%	0.0%	0.0%	0.0%	0.0%	
AM Peak	07:00	07:00	07:00	07:00	08:00	07:00		07:00	10:00					07:00
Vol.	3	470	83	9	8	2		1	1					571
PM Peak	16:00	14:00	14:00	13:00	12:00	19:00	12:00	12:00	13:00					14:00
Vol.	4	439	72	9	8	3	2	1	1					523

Location : West Road South of
Location : Crosby Street
City/State: Milford, NH
Counter : 13735
Southbound, Northbound

Accurate Counts
978-664-2565

517840C2
Site Code: 51784002

Start Time	Bikes	Cars & Trailers	2 Axle Long	Buses	2 Axle 6 Tire	3 Axle Single	4 Axle Single	<5 Axl Double	5 Axle Double	>6 Axl Double	<6 Axl Multi	6 Axle Multi	>6 Axl Multi	Total
05/20/06	1	43	1	0	0	0	0	0	0	0	0	0	0	45
01:00	0	28	2	0	0	0	0	0	0	0	0	0	0	30
02:00	0	14	1	0	0	0	0	0	0	0	0	0	0	15
03:00	1	6	0	0	0	0	0	0	0	0	0	0	0	7
04:00	0	17	1	0	0	0	0	0	0	0	0	0	0	18
05:00	0	20	10	0	0	0	0	0	0	0	0	0	0	30
06:00	0	57	18	0	1	0	0	0	0	0	0	0	0	76
07:00	0	147	34	0	0	**1**	0	0	0	0	0	0	0	182
08:00	2	234	40	1	0	1	0	**1**	0	0	0	0	0	279
09:00	4	296	44	**4**	**6**	0	0	0	0	0	0	0	0	354
10:00	5	295	**60**	0	0	1	0	0	0	0	0	0	0	361
11:00	**8**	**340**	58	0	2	0	0	1	0	0	0	0	0	**409**
12 PM	4	**304**	47	0	**4**	0	0	**1**	0	0	0	0	0	**360**
13:00	2	272	**56**	0	1	**1**	0	1	0	0	0	0	0	333
14:00	3	244	34	0	1	0	0	0	0	0	0	0	0	282
15:00	**8**	290	32	**4**	3	0	0	0	0	0	0	0	0	337
16:00	2	249	30	0	4	1	0	0	0	0	0	0	0	286
17:00	0	238	48	0	1	0	0	0	0	0	0	0	0	287
18:00	4	225	24	0	2	0	0	0	0	0	0	0	0	255
19:00	3	235	16	0	1	0	0	0	0	0	0	0	0	255
20:00	1	128	11	0	3	0	0	0	0	0	0	0	0	143
21:00	0	98	13	0	0	0	0	1	0	0	0	0	0	112
22:00	1	83	13	0	0	0	0	0	0	0	0	0	0	97
23:00	0	62	4	0	0	0	0	0	0	0	0	0	0	66
Day Total	49	3925	597	9	29	5	0	5	0	0	0	0	0	4619
Percent	1.1%	85.0%	12.9%	0.2%	0.6%	0.1%	0.0%	0.1%	0.0%	0.0%	0.0%	0.0%	0.0%	
AM Peak	11:00	11:00	10:00	09:00	09:00	07:00		08:00						11:00
Vol.	8	340	60	4	6	1		1						409
PM Peak	15:00	12:00	13:00	15:00	12:00	13:00		12:00						12:00
Vol.	8	304	56	4	4	1		1						360

Location : West Road South of
Location : Crosby Street
City/State: Milford, NH
Counter : 13735
Southbound, Northbound

Accurate Counts
978-664-2565

517840C2
Site Code: 51784002

Start Time	Bikes	Cars & Trailers	2 Axle Long	Buses	2 Axle 6 Tire	3 Axle Single	4 Axle Single	<5 Axl Double	5 Axle Double	>6 Axl Double	<6 Axl Multi	6 Axle Multi	>6 Axl Multi	Total
05/21/06	0	31	1	0	0	0	0	0	0	0	0	0	0	32
01:00	1	29	2	0	2	0	0	0	0	0	0	0	0	34
02:00	0	22	0	0	0	0	0	0	0	0	0	0	0	22
03:00	0	6	1	0	0	0	0	0	0	0	0	0	0	7
04:00	0	10	1	0	0	0	0	0	0	0	0	0	0	11
05:00	0	22	6	0	1	0	0	0	0	0	0	0	0	29
06:00	0	26	6	0	0	0	0	0	0	0	0	0	0	32
07:00	0	58	15	0	0	0	0	0	0	0	0	0	0	73
08:00	1	100	26	**1**	**3**	0	0	0	0	0	0	0	0	131
09:00	1	212	31	0	1	0	0	0	0	0	0	0	0	245
10:00	**7**	206	**35**	0	3	0	0	0	0	0	0	0	0	251
11:00	7	**232**	34	0	1	0	0	0	0	0	0	0	0	**274**
12 PM	**7**	247	34	0	**3**	0	0	0	**1**	0	0	0	0	**292**
13:00	2	**256**	30	1	1	0	0	**1**	0	0	0	0	0	291
14:00	0	251	**36**	**3**	2	0	0	0	0	0	0	0	0	292
15:00	3	228	30	0	1	**1**	0	0	0	0	0	0	0	263
16:00	1	185	29	0	2	0	0	1	0	0	0	0	0	218
17:00	3	204	33	0	0	0	0	0	0	0	0	0	0	240
18:00	2	171	18	0	1	0	0	0	0	0	0	0	0	192
19:00	0	170	24	2	1	0	0	0	0	0	0	0	0	197
20:00	3	140	17	0	0	0	0	1	0	0	0	0	0	161
21:00	0	53	12	0	1	0	0	0	0	0	0	0	0	66
22:00	0	52	2	0	0	0	0	0	0	0	0	0	0	54
23:00	1	35	2	0	0	0	0	0	0	0	0	0	0	38
Day Total	39	2946	425	7	23	1	0	3	1	0	0	0	0	3445
Percent	1.1%	85.5%	12.3%	0.2%	0.7%	0.0%	0.0%	0.1%	0.0%	0.0%	0.0%	0.0%	0.0%	
AM Peak	10:00	11:00	10:00	08:00	08:00									11:00
Vol.	7	232	35	1	3									274
PM Peak	12:00	13:00	14:00	14:00	12:00	15:00		13:00	12:00					12:00
Vol.	7	256	36	3	3	1		1	1					292

Location : West Road South of
Location : Crosby Street
City/State: Milford, NH
Counter : 13735
Southbound, Northbound

Accurate Counts
978-664-2565

517840C2
Site Code: 51784002

Start Time	Bikes	Cars & Trailers	2 Axle Long	Buses	2 Axle 6 Tire	3 Axle Single	4 Axle Single	<5 Axl Double	5 Axle Double	>6 Axl Double	<6 Axl Multi	6 Axle Multi	>6 Axl Multi	Total
05/22/06	0	13	2	0	0	0	0	0	0	0	0	0	0	15
01:00	0	8	2	0	0	0	0	0	0	0	0	0	0	10
02:00	0	4	1	0	0	0	0	0	0	0	0	0	0	5
03:00	0	5	4	0	0	0	0	0	0	0	0	0	0	9
04:00	0	16	4	0	0	0	0	0	0	0	0	0	0	20
05:00	0	47	15	0	0	1	0	0	0	0	0	0	0	63
06:00	0	148	28	0	0	0	0	1	0	0	0	0	0	177
07:00	**6**	**464**	**71**	**7**	3	**2**	0	2	0	0	0	0	0	**555**
08:00	1	206	40	1	**8**	2	0	2	0	0	0	0	0	260
09:00	3	179	27	1	4	2	0	0	0	0	0	0	0	216
10:00	2	180	28	0	1	1	0	2	**1**	0	0	0	0	215
11:00	0	230	33	0	3	2	0	**3**	1	0	0	0	0	272
12 PM	2	272	36	1	**8**	1	0	1	**2**	0	0	0	0	323
13:00	3	195	41	7	5	**3**	0	1	0	0	0	0	0	255
14:00	5	**383**	42	**10**	7	0	0	**5**	0	0	0	0	0	**452**
15:00	7	326	52	4	4	0	0	2	1	0	0	0	0	396
16:00	7	335	**59**	0	6	0	0	2	0	0	0	0	0	409
17:00	**8**	365	51	1	4	1	0	2	0	0	0	0	0	432
18:00	3	267	36	1	2	1	0	0	0	0	0	0	0	310
19:00	2	219	39	1	2	0	0	0	0	0	0	0	0	263
20:00	2	165	21	0	0	0	0	0	0	0	0	0	0	188
21:00	1	111	10	0	2	0	0	0	0	0	0	0	0	124
22:00	0	55	2	0	0	0	0	0	0	0	0	0	0	57
23:00	0	38	2	0	0	0	0	0	0	0	0	0	0	40
Day Total	52	4231	646	34	59	16	0	23	5	0	0	0	0	5066
Percent	1.0%	83.5%	12.8%	0.7%	1.2%	0.3%	0.0%	0.5%	0.1%	0.0%	0.0%	0.0%	0.0%	
AM Peak	07:00	07:00	07:00	07:00	08:00	07:00		11:00	10:00					07:00
Vol.	6	464	71	7	8	2		3	1					555
PM Peak	17:00	14:00	16:00	14:00	12:00	13:00		14:00	12:00					14:00
Vol.	8	383	59	10	8	3		5	2					452

Location : West Road South of
Location : Crosby Street
City/State: Milford, NH
Counter : 13735
Southbound, Northbound

Accurate Counts
978-664-2565

517840C2
Site Code: 51784002

Start Time	Bikes	Cars & Trailers	2 Axle Long	Buses	2 Axle 6 Tire	3 Axle Single	4 Axle Single	<5 Axl Double	5 Axle Double	>6 Axl Double	<6 Axl Multi	6 Axle Multi	>6 Axl Multi	Total
05/23/06	0	14	3	0	0	0	0	0	0	0	0	0	0	17
01:00	0	7	0	0	0	0	0	0	0	0	0	0	0	7
02:00	0	9	2	0	0	0	0	0	0	0	0	0	0	11
03:00	0	6	0	0	1	0	0	0	0	0	0	0	0	7
04:00	0	21	4	0	0	0	0	0	0	0	0	0	0	25
05:00	2	40	12	0	0	0	0	0	0	0	0	0	0	54
06:00	1	162	28	0	2	**1**	0	0	0	0	0	0	0	194
07:00	**6**	**453**	**71**	**8**	2	1	0	**6**	0	0	0	0	0	**547**
08:00	1	218	40	2	**14**	0	0	2	0	0	0	0	0	277
09:00	1	191	42	1	3	0	0	0	0	0	0	0	0	238
10:00	1	166	27	0	5	1	0	0	0	0	0	0	0	200
11:00	2	188	32	0	3	1	0	1	**1**	0	0	0	0	228
12 PM	2	245	37	1	3	1	0	1	0	0	0	0	0	290
13:00	1	195	27	2	**7**	1	0	**5**	0	0	0	0	0	238
14:00	**8**	**431**	34	**13**	7	**2**	0	2	0	0	0	0	0	**497**
15:00	7	331	46	1	2	1	0	0	0	0	0	0	0	388
16:00	5	405	**63**	0	6	2	0	1	0	0	0	0	0	482
17:00	8	374	46	0	6	0	0	2	0	0	0	0	0	436
18:00	4	308	41	0	5	0	0	0	0	0	0	0	0	358
19:00	4	255	26	4	3	0	0	1	0	0	0	0	0	293
20:00	2	196	21	1	1	0	0	1	0	0	0	0	0	222
21:00	2	97	15	0	1	0	0	0	0	0	0	0	0	115
22:00	3	62	6	0	0	0	0	0	0	0	0	0	0	71
23:00	0	39	5	0	0	0	0	0	0	0	0	0	0	44
Day Total	60	4413	628	33	71	11	0	22	1	0	0	0	0	5239
Percent	1.1%	84.2%	12.0%	0.6%	1.4%	0.2%	0.0%	0.4%	0.0%	0.0%	0.0%	0.0%	0.0%	
AM Peak	07:00	07:00	07:00	07:00	08:00	06:00		07:00	11:00					07:00
Vol.	6	453	71	8	14	1		6	1					547
PM Peak	14:00	14:00	16:00	14:00	13:00	14:00		13:00						14:00
Vol.	8	431	63	13	7	2		5						497

Location : West Road South of
Location : Crosby Street
City/State: Milford, NH
Counter : 13735
Southbound, Northbound

Accurate Counts
978-664-2565

517840C2
Site Code: 51784002

Start Time	Bikes	Cars & Trailers	2 Axle Long	Buses	2 Axle 6 Tire	3 Axle Single	4 Axle Single	<5 Axl Double	5 Axle Double	>6 Axl Double	<6 Axl Multi	6 Axle Multi	>6 Axl Multi	Total
05/24/06	1	21	0	0	0	0	0	0	0	0	0	0	0	22
01:00	0	8	0	0	0	0	0	0	0	0	0	0	0	8
02:00	0	7	0	0	0	0	0	0	0	0	0	0	0	7
03:00	0	10	0	0	0	0	0	0	0	0	0	0	0	10
04:00	0	24	3	0	0	0	0	0	0	0	0	0	0	27
05:00	0	41	17	0	0	0	0	0	0	0	0	0	0	58
06:00	2	136	40	0	0	0	0	**1**	0	0	0	0	0	179
07:00	**6**	**458**	**65**	**5**	3	**2**	0	1	0	0	0	0	0	**540**
08:00	2	228	32	1	3	1	0	0	0	0	0	0	0	267
09:00	1	202	28	1	2	1	0	0	0	0	0	0	0	235
10:00	2	186	29	0	**4**	1	0	1	0	0	0	0	0	223
11:00	1	238	30	1	2	0	0	0	0	0	0	0	0	272
12 PM	2	306	35	1	3	1	0	0	0	0	0	0	0	348
13:00	3	248	35	0	3	1	0	0	0	**1**	0	0	0	291
14:00	6	376	41	**15**	3	0	0	**3**	**1**	0	0	0	0	445
15:00	10	357	42	1	4	1	0	0	1	0	0	0	0	416
16:00	5	365	**47**	0	**5**	0	0	2	0	0	0	0	0	424
17:00	**15**	**381**	44	0	4	**2**	0	2	0	0	0	0	0	**448**
18:00	5	337	38	1	1	0	0	0	0	0	0	0	0	382
19:00	9	258	42	1	2	0	0	0	0	1	0	0	0	313
20:00	3	225	25	0	1	0	0	0	0	0	0	0	0	254
21:00	4	104	10	0	0	0	0	0	0	0	0	0	0	118
22:00	3	73	7	0	0	0	0	0	0	0	0	0	0	83
23:00	0	51	2	0	0	0	0	0	0	0	0	0	0	53
Day Total	80	4640	612	27	40	10	0	10	2	2	0	0	0	5423
Percent	1.5%	85.6%	11.3%	0.5%	0.7%	0.2%	0.0%	0.2%	0.0%	0.0%	0.0%	0.0%	0.0%	
AM Peak	07:00	07:00	07:00	07:00	10:00	07:00		06:00						07:00
Vol.	6	458	65	5	4	2		1						540
PM Peak	17:00	17:00	16:00	14:00	16:00	17:00		14:00	14:00	13:00				17:00
Vol.	15	381	47	15	5	2		3	1	1				448

Location : West Road South of
Location : Crosby Street
City/State: Milford, NH
Counter : 13735
Southbound, Northbound

Accurate Counts
978-664-2565

517840C2
Site Code: 51784002

Start Time	Bikes	Cars & Trailers	2 Axle Long	Buses	2 Axle 6 Tire	3 Axle Single	4 Axle Single	<5 Axl Double	5 Axle Double	>6 Axl Double	<6 Axl Multi	6 Axle Multi	>6 Axl Multi	Total
05/25/06	3	13	2	0	0	0	0	0	0	0	0	0	0	18
01:00	0	5	1	0	0	0	0	0	0	0	0	0	0	6
02:00	0	7	2	0	0	0	0	0	0	0	0	0	0	9
03:00	0	5	0	0	1	0	0	0	0	0	0	0	0	6
04:00	0	14	3	0	0	0	0	0	0	0	0	0	0	17
05:00	3	52	16	0	1	0	0	0	0	0	0	0	0	72
06:00	4	154	27	0	2	0	0	0	0	0	0	0	0	187
07:00	**7**	**491**	**74**	**7**	3	**3**	0	0	0	0	0	0	0	**585**
08:00	3	217	34	1	2	0	0	0	0	0	0	0	0	257
09:00	6	205	35	1	**4**	2	0	0	0	0	0	0	0	253
10:00	3	211	27	1	4	2	0	**2**	0	0	0	0	0	250
11:00	5	261	28	1	1	0	0	1	0	0	0	0	0	297
12 PM	6	289	39	2	**8**	1	0	0	0	0	0	0	0	345
13:00	6	237	32	0	8	0	0	0	0	0	0	0	0	283
14:00	12	398	47	**15**	3	0	0	**1**	0	0	0	0	0	476
15:00	9	388	42	2	5	**3**	0	1	0	0	0	0	0	450
16:00	9	379	60	0	2	3	0	1	**2**	0	0	0	0	456
17:00	10	**453**	**66**	1	1	1	0	0	0	0	0	0	0	**532**
18:00	**20**	391	53	0	1	0	0	0	0	0	0	0	0	465
19:00	12	308	38	1	1	0	0	1	0	0	0	0	0	361
20:00	18	219	35	0	2	0	0	0	0	0	0	0	0	274
21:00	12	200	21	0	0	1	0	0	0	0	0	0	0	234
22:00	4	84	9	0	0	0	0	0	0	0	0	0	0	97
23:00	2	56	3	0	1	0	0	0	0	0	0	0	0	62
Day Total	154	5037	694	32	50	16	0	7	2	0	0	0	0	5992
Percent	2.6%	84.1%	11.6%	0.5%	0.8%	0.3%	0.0%	0.1%	0.0%	0.0%	0.0%	0.0%	0.0%	
AM Peak	07:00	07:00	07:00	07:00	09:00	07:00		10:00						07:00
Vol.	7	491	74	7	4	3		2						585
PM Peak	18:00	17:00	17:00	14:00	12:00	15:00		14:00	16:00					17:00
Vol.	20	453	66	15	8	3		1	2					532

Location : West Road South of
Location : Crosby Street
City/State: Milford, NH
Counter : 13735
Southbound, Northbound

Accurate Counts
978-664-2565

517840C2
Site Code: 51784002

Start Time	Bikes	Cars & Trailers	2 Axle Long	Buses	2 Axle 6 Tire	3 Axle Single	4 Axle Single	<5 Axl Double	5 Axle Double	>6 Axl Double	<6 Axl Multi	6 Axle Multi	>6 Axl Multi	Total
05/26/06	2	30	3	0	1	0	0	0	0	0	0	0	0	36
01:00	1	9	0	0	0	0	0	0	0	0	0	0	0	10
02:00	1	10	1	0	0	0	0	0	0	0	0	0	0	12
03:00	1	15	1	0	0	0	0	0	0	0	0	0	0	17
04:00	4	16	1	0	0	0	0	0	0	0	0	0	0	21
05:00	2	43	9	0	1	0	0	0	0	0	0	0	0	55
06:00	7	139	33	0	2	0	0	0	**1**	0	0	0	0	182
07:00	**12**	**462**	**67**	**6**	**4**	1	0	1	0	0	0	0	0	**553**
08:00	11	225	37	1	4	1	0	0	1	0	0	0	0	280
09:00	4	189	33	0	2	0	0	**2**	0	0	0	0	0	230
10:00	5	210	43	0	1	1	0	1	1	0	0	0	0	262
11:00	3	269	35	0	1	**2**	0	0	0	0	0	0	0	310
12 PM	7	264	37	3	5	**4**	0	**4**	0	0	0	0	0	324
13:00	9	273	**61**	4	**7**	1	0	1	**1**	0	0	0	0	357
14:00	12	**399**	51	**11**	6	1	0	1	1	0	0	0	0	**482**
15:00	13	346	50	1	5	0	0	1	0	0	0	0	0	416
16:00	**26**	354	51	0	2	2	0	1	0	0	0	0	0	436
17:00	14	353	39	0	3	1	0	0	0	**1**	0	0	0	411
18:00	8	268	26	0	1	1	0	0	0	0	0	0	0	304
19:00	7	202	17	0	1	1	0	0	0	0	0	0	0	228
20:00	2	157	13	0	1	0	0	0	0	0	0	0	0	173
21:00	7	137	14	0	2	0	0	0	0	0	0	0	0	160
22:00	5	72	9	0	2	0	0	0	0	0	0	0	0	88
23:00	0	71	5	0	0	0	0	0	0	0	0	0	0	76
Day Total	163	4513	636	26	51	16	0	12	5	1	0	0	0	5423
Percent	3.0%	83.2%	11.7%	0.5%	0.9%	0.3%	0.0%	0.2%	0.1%	0.0%	0.0%	0.0%	0.0%	
AM Peak	07:00	07:00	07:00	07:00	07:00	11:00		09:00	06:00					07:00
Vol.	12	462	67	6	4	2		2	1					553
PM Peak	16:00	14:00	13:00	14:00	13:00	12:00		12:00	13:00	17:00				14:00
Vol.	26	399	61	11	7	4		4	1	1				482

Location : West Road South of
Location : Crosby Street
City/State: Milford, NH
Counter : 13735
Southbound, Northbound

Accurate Counts
978-664-2565

517840C2
Site Code: 51784002

Start Time	Bikes	Cars & Trailers	2 Axle Long	Buses	2 Axle 6 Tire	3 Axle Single	4 Axle Single	<5 Axl Double	5 Axle Double	>6 Axl Double	<6 Axl Multi	6 Axle Multi	>6 Axl Multi	Total
05/27/06	1	30	3	0	0	0	0	0	0	0	0	0	0	34
01:00	2	22	0	0	0	0	0	0	0	0	0	0	0	24
02:00	0	14	0	0	0	0	0	0	0	0	0	0	0	14
03:00	2	7	0	0	0	0	0	0	0	0	0	0	0	9
04:00	0	11	1	0	0	0	0	0	0	0	0	0	0	12
05:00	3	34	10	0	0	0	0	0	0	0	0	0	0	47
06:00	0	52	18	0	1	0	0	1	0	0	0	0	0	72
07:00	0	139	15	**2**	0	0	0	1	0	0	0	0	0	157
08:00	5	150	30	2	3	**1**	0	**2**	0	0	0	0	0	193
09:00	2	245	34	0	1	1	0	0	0	0	0	0	0	283
10:00	**7**	**296**	41	0	**4**	0	0	2	0	0	0	0	0	**350**
11:00	5	293	**42**	0	2	1	0	0	0	0	0	0	0	343
12 PM	4	224	30	0	**4**	0	0	0	0	0	0	0	0	262
13:00	7	**281**	31	0	3	**1**	0	0	0	0	0	0	0	**323**
14:00	**11**	234	26	0	1	0	0	1	0	0	0	0	0	273
15:00	6	210	**33**	**2**	3	0	0	0	0	0	0	0	0	254
16:00	7	220	31	0	2	0	0	0	0	0	0	0	0	260
17:00	7	212	29	2	2	0	0	0	0	0	0	0	0	252
18:00	10	194	19	0	3	0	0	**2**	0	0	0	0	0	228
19:00	7	144	16	0	2	0	0	0	0	0	0	0	0	169
20:00	9	163	9	0	1	0	0	0	0	0	0	0	0	182
21:00	6	117	11	0	0	0	0	1	0	0	0	0	0	135
22:00	3	117	8	0	1	0	0	0	0	0	0	0	0	129
23:00	1	78	3	0	0	0	0	0	0	0	0	0	0	82
Day Total	105	3487	440	8	33	4	0	10	0	0	0	0	0	4087
Percent	2.6%	85.3%	10.8%	0.2%	0.8%	0.1%	0.0%	0.2%	0.0%	0.0%	0.0%	0.0%	0.0%	
AM Peak	10:00	10:00	11:00	07:00	10:00	08:00		08:00						10:00
Vol.	7	296	42	2	4	1		2						350
PM Peak	14:00	13:00	15:00	15:00	12:00	13:00		18:00						13:00
Vol.	11	281	33	2	4	1		2						323

Location : West Road South of
Location : Crosby Street
City/State: Milford, NH
Counter : 13735
Southbound, Northbound

Accurate Counts
978-664-2565

517840C2
Site Code: 51784002

Start Time	Bikes	Cars & Trailers	2 Axle Long	Buses	2 Axle 6 Tire	3 Axle Single	4 Axle Single	<5 Axl Double	5 Axle Double	>6 Axl Double	<6 Axl Multi	6 Axle Multi	>6 Axl Multi	Total
05/28/06	2	40	2	0	0	0	0	0	0	0	0	0	0	44
01:00	0	25	1	0	1	0	0	0	0	0	0	0	0	27
02:00	1	9	0	0	0	0	0	0	0	0	0	0	0	10
03:00	0	6	1	0	0	0	0	0	0	0	0	0	0	7
04:00	0	11	2	0	0	0	0	0	0	0	0	0	0	13
05:00	0	23	2	0	1	0	0	0	0	0	0	0	0	26
06:00	1	36	6	0	1	0	0	0	0	0	0	0	0	44
07:00	1	101	12	0	0	0	0	0	0	0	0	0	0	114
08:00	0	98	20	0	1	0	0	0	0	0	0	0	0	119
09:00	5	171	27	0	**4**	0	0	**1**	0	0	0	0	0	208
10:00	**10**	203	**28**	0	0	0	0	1	0	0	0	0	0	**242**
11:00	4	**204**	27	**1**	3	0	0	0	0	0	0	0	0	239
12 PM	5	**237**	21	0	**3**	0	0	**1**	**1**	0	0	0	0	**268**
13:00	5	186	**27**	0	0	0	0	1	0	0	0	0	0	219
14:00	3	171	21	0	2	0	0	0	0	0	0	0	0	197
15:00	**10**	168	23	0	2	0	0	0	0	0	0	0	0	203
16:00	5	149	13	0	0	0	0	0	0	0	0	0	0	167
17:00	9	167	15	0	3	0	0	1	0	0	0	0	0	195
18:00	6	152	12	0	3	0	0	0	0	0	0	0	0	173
19:00	4	163	24	0	2	0	0	0	0	0	0	0	0	193
20:00	5	126	10	0	0	**1**	0	1	0	0	0	0	0	143
21:00	0	90	12	0	2	0	0	0	0	0	0	0	0	104
22:00	1	69	1	0	0	0	0	0	0	0	0	0	0	71
23:00	0	75	2	0	1	0	0	0	0	0	0	0	0	78
Day Total	77	2680	309	1	29	1	0	6	1	0	0	0	0	3104
Percent	2.5%	86.3%	10.0%	0.0%	0.9%	0.0%	0.0%	0.2%	0.0%	0.0%	0.0%	0.0%	0.0%	
AM Peak	10:00	11:00	10:00	11:00	09:00			09:00						10:00
Vol.	10	204	28	1	4			1						242
PM Peak	15:00	12:00	13:00		12:00	20:00		12:00	12:00					12:00
Vol.	10	237	27		3	1		1	1					268

Location : West Road South of
Location : Crosby Street
City/State: Milford, NH
Counter : 13735
Southbound, Northbound

Accurate Counts
978-664-2565

517840C2
Site Code: 51784002

Start Time	Bikes	Cars & Trailers	2 Axle Long	Buses	2 Axle 6 Tire	3 Axle Single	4 Axle Single	<5 Axl Double	5 Axle Double	>6 Axl Double	<6 Axl Multi	6 Axle Multi	>6 Axl Multi	Total
05/29/06	0	33	3	0	1	0	0	0	0	0	0	0	0	37
01:00	0	23	0	0	0	0	0	0	0	0	0	0	0	23
02:00	0	7	0	0	0	0	0	0	0	0	0	0	0	7
03:00	0	8	1	0	0	0	0	0	0	0	0	0	0	9
04:00	0	10	1	0	0	0	0	0	0	0	0	0	0	11
05:00	0	21	5	0	0	0	0	0	0	0	0	0	0	26
06:00	0	35	4	0	0	0	0	0	0	0	0	0	0	39
07:00	2	53	12	0	1	0	0	0	0	0	0	0	0	68
08:00	2	99	11	0	0	0	0	0	0	0	0	0	0	112
09:00	1	202	30	0	0	**1**	0	0	0	0	0	0	0	234
10:00	2	196	28	0	**6**	0	0	0	0	0	0	0	0	232
11:00	**9**	**287**	**32**	0	3	0	0	0	0	0	0	0	0	**331**
12 PM	4	**238**	**43**	**2**	**4**	0	0	0	0	0	0	0	0	**291**
13:00	**15**	173	24	0	3	**1**	0	0	0	0	0	0	0	216
14:00	4	155	18	0	1	0	0	0	0	0	0	0	0	178
15:00	7	193	21	0	3	0	0	0	0	0	0	0	0	224
16:00	5	164	23	0	1	0	0	0	0	0	0	0	0	193
17:00	10	170	16	0	1	0	0	0	0	0	0	0	0	197
18:00	3	197	25	0	1	0	0	0	0	0	0	0	0	226
19:00	3	181	19	0	3	0	0	0	0	0	0	0	0	206
20:00	6	138	15	0	3	0	0	0	0	0	0	0	0	162
21:00	2	95	7	0	0	0	0	0	0	0	0	0	0	104
22:00	2	42	4	0	0	0	0	0	0	0	0	0	0	48
23:00	2	29	1	0	0	0	0	0	0	0	0	0	0	32
Day Total	79	2749	343	2	31	2	0	0	0	0	0	0	0	3206
Percent	2.5%	85.7%	10.7%	0.1%	1.0%	0.1%	0.0%	0.0%	0.0%	0.0%	0.0%	0.0%	0.0%	
AM Peak	11:00	11:00	11:00		10:00	09:00								11:00
Vol.	9	287	32		6	1								331
PM Peak	13:00	12:00	12:00	12:00	12:00	13:00								12:00
Vol.	15	238	43	2	4	1								291

Location : West Road South of
Location : Crosby Street
City/State: Milford, NH
Counter : 13735
Southbound, Northbound

Accurate Counts
978-664-2565

517840C2
Site Code: 51784002

Start Time	Bikes	Cars & Trailers	2 Axle Long	Buses	2 Axle 6 Tire	3 Axle Single	4 Axle Single	<5 Axl Double	5 Axle Double	>6 Axl Double	<6 Axl Multi	6 Axle Multi	>6 Axl Multi	Total
05/30/06	1	10	1	0	0	0	0	0	0	0	0	0	0	12
01:00	0	7	0	0	0	0	0	0	0	0	0	0	0	7
02:00	0	9	1	0	0	0	0	0	0	0	0	0	0	10
03:00	0	6	0	0	0	0	0	0	0	0	0	0	0	6
04:00	0	17	2	0	0	0	0	0	0	0	0	0	0	19
05:00	1	49	16	0	1	1	0	0	0	0	0	0	0	68
06:00	2	158	25	0	1	0	0	0	0	0	0	0	0	186
07:00	**8**	**470**	**59**	**7**	**7**	**3**	0	0	0	0	0	0	0	**554**
08:00	1	222	19	1	6	1	**1**	**2**	0	0	0	0	0	253
09:00	0	200	36	0	4	0	0	2	0	0	0	0	0	242
10:00	2	175	29	0	2	0	0	1	0	0	0	0	0	209
11:00	4	233	32	0	1	3	0	1	0	0	0	0	0	274
12 PM	4	282	36	0	4	0	0	1	0	0	0	0	0	327
13:00	4	208	36	8	5	0	0	0	0	0	0	0	0	261
14:00	2	**393**	39	**9**	**9**	**3**	0	1	0	**1**	0	0	0	**457**
15:00	5	333	**45**	3	2	1	0	**2**	0	0	0	0	0	391
16:00	5	340	42	0	2	0	0	1	0	0	0	0	0	390
17:00	**14**	326	31	0	0	0	0	0	0	0	0	0	0	371
18:00	6	283	22	0	0	0	0	0	0	0	0	0	0	311
19:00	3	231	24	0	1	0	0	0	0	0	0	0	0	259
20:00	4	178	20	0	0	2	0	0	0	0	0	0	0	204
21:00	3	100	7	0	0	0	0	0	0	0	0	0	0	110
22:00	5	53	2	0	0	0	0	0	0	0	0	0	0	60
23:00	0	45	3	0	0	0	0	0	0	0	0	0	0	48
Day Total	74	4328	527	28	45	14	1	11	0	1	0	0	0	5029
Percent	1.5%	86.1%	10.5%	0.6%	0.9%	0.3%	0.0%	0.2%	0.0%	0.0%	0.0%	0.0%	0.0%	
AM Peak	07:00	07:00	07:00	07:00	07:00	07:00	08:00	08:00						07:00
Vol.	8	470	59	7	7	3	1	2						554
PM Peak	17:00	14:00	15:00	14:00	14:00	14:00		15:00		14:00				14:00
Vol.	14	393	45	9	9	3		2		1				457

Location : West Road South of
Location : Crosby Street
City/State: Milford, NH
Counter : 13735
Southbound, Northbound

Accurate Counts
978-664-2565

517840C2
Site Code: 51784002

Start Time	Bikes	Cars & Trailers	2 Axle Long	Buses	2 Axle 6 Tire	3 Axle Single	4 Axle Single	<5 Axl Double	5 Axle Double	>6 Axl Double	<6 Axl Multi	6 Axle Multi	>6 Axl Multi	Total
05/31/06	0	18	0	0	0	0	0	0	0	0	0	0	0	18
01:00	0	4	1	0	0	0	0	0	0	0	0	0	0	5
02:00	0	3	0	0	0	0	0	0	0	0	0	0	0	3
03:00	0	12	0	0	0	0	0	0	0	0	0	0	0	12
04:00	0	15	4	0	0	0	0	0	0	0	0	0	0	19
05:00	1	45	13	0	1	0	0	0	0	0	0	0	0	60
06:00	**7**	157	26	0	0	0	0	0	0	0	0	0	0	190
07:00	4	**498**	**63**	**7**	3	1	0	0	0	0	0	0	0	**576**
08:00	1	239	30	1	**4**	**2**	0	**1**	0	0	0	0	0	278
09:00	1	210	39	1	2	0	0	0	0	0	0	0	0	253
10:00	1	168	13	0	2	1	0	0	0	0	0	0	0	185
11:00	0	217	17	0	2	0	0	0	0	0	0	0	0	236
12 PM	4	289	29	0	3	1	0	0	0	0	0	0	0	326
13:00	3	239	31	0	3	1	**1**	0	0	0	0	0	0	278
14:00	10	**446**	35	**17**	2	0	0	**2**	0	0	0	0	0	**512**
15:00	8	404	**53**	2	**6**	**2**	0	0	0	0	0	0	0	475
16:00	**21**	340	34	0	3	2	0	0	0	0	0	0	0	400
17:00	16	390	42	1	2	0	0	0	0	0	0	0	0	451
18:00	8	380	37	0	2	1	0	0	0	0	0	0	0	428
19:00	10	305	21	0	1	1	0	0	0	0	0	0	0	338
20:00	10	244	22	0	2	0	0	0	0	0	0	0	0	278
21:00	8	218	17	0	1	1	0	0	0	0	0	0	0	245
22:00	3	65	5	0	3	0	0	0	0	0	0	0	0	76
23:00	1	52	2	0	0	0	0	0	0	0	0	0	0	55
Day Total	117	4958	534	29	42	13	1	3	0	0	0	0	0	5697
Percent	2.1%	87.0%	9.4%	0.5%	0.7%	0.2%	0.0%	0.1%	0.0%	0.0%	0.0%	0.0%	0.0%	
AM Peak	06:00	07:00	07:00	07:00	08:00	08:00		08:00						07:00
Vol.	7	498	63	7	4	2		1						576
PM Peak	16:00	14:00	15:00	14:00	15:00	15:00	13:00	14:00						14:00
Vol.	21	446	53	17	6	2	1	2						512

Location : West Road South of
Location : Crosby Street
City/State: Milford, NH
Counter : 13735
Southbound, Northbound

Accurate Counts
978-664-2565

517840C2
Site Code: 51784002

Start Time	Bikes	Cars & Trailers	2 Axle Long	Buses	2 Axle 6 Tire	3 Axle Single	4 Axle Single	<5 Axl Double	5 Axle Double	>6 Axl Double	<6 Axl Multi	6 Axle Multi	>6 Axl Multi	Total
06/01/06	0	17	3	0	0	0	0	0	0	0	0	0	0	20
01:00	1	13	0	0	0	0	0	0	0	0	0	0	0	14
02:00	1	6	0	0	0	0	0	0	0	0	0	0	0	7
03:00	0	4	1	0	0	0	0	0	0	0	0	0	0	5
04:00	0	15	3	0	0	0	0	0	0	0	0	0	0	18
05:00	0	51	15	0	0	1	0	1	0	0	0	0	0	68
06:00	2	176	17	0	0	1	0	0	1	0	0	0	0	197
07:00	3	**510**	**56**	**7**	**3**	**3**	0	0	0	0	0	0	0	**582**
08:00	2	220	28	1	2	0	0	0	0	0	0	0	0	253
09:00	3	268	22	0	1	1	0	**2**	**2**	0	0	0	0	299
10:00	2	231	37	1	1	1	**1**	0	0	0	0	0	0	274
11:00	**4**	261	25	0	3	0	0	0	0	0	0	0	0	293
12 PM	3	295	22	0	4	1	0	0	0	0	0	0	0	325
13:00	5	214	31	**4**	1	1	0	0	0	0	0	0	0	256
14:00	**9**	**436**	39	2	**5**	**2**	0	**1**	0	0	0	0	0	**494**
15:00	4	363	29	1	2	1	0	0	0	0	0	0	0	400
16:00	9	374	32	0	3	0	0	0	0	0	0	0	0	418
17:00	5	366	**50**	0	1	0	0	0	0	0	0	0	0	422
18:00	5	413	28	1	1	1	0	0	0	0	0	0	0	449
19:00	3	306	32	0	1	1	0	0	0	0	0	0	0	343
20:00	9	245	34	0	2	0	0	0	0	0	0	0	0	290
21:00	6	115	15	1	0	0	0	0	0	0	0	0	0	137
22:00	0	49	7	0	0	0	0	0	0	0	0	0	0	56
23:00	0	35	5	0	0	0	0	0	0	0	0	0	0	40
Day Total	76	4983	531	18	30	14	1	4	3	0	0	0	0	5660
Percent	1.3%	88.0%	9.4%	0.3%	0.5%	0.2%	0.0%	0.1%	0.1%	0.0%	0.0%	0.0%	0.0%	
AM Peak	11:00	07:00	07:00	07:00	07:00	07:00	10:00	09:00	09:00					07:00
Vol.	4	510	56	7	3	3	1	2	2					582
PM Peak	14:00	14:00	17:00	13:00	14:00	14:00		14:00						14:00
Vol.	9	436	50	4	5	2		1						494

Location : West Road South of
Location : Crosby Street
City/State: Milford, NH
Counter : 13735
Southbound, Northbound

Accurate Counts
978-664-2565

517840C2
Site Code: 51784002

Start Time	Bikes	Cars & Trailers	2 Axle Long	Buses	2 Axle 6 Tire	3 Axle Single	4 Axle Single	<5 Axl Double	5 Axle Double	>6 Axl Double	<6 Axl Multi	6 Axle Multi	>6 Axl Multi	Total
06/02/06	0	14	2	0	0	0	0	0	0	0	0	0	0	16
01:00	0	9	1	0	0	0	0	0	0	0	0	0	0	10
02:00	0	9	0	0	0	0	0	0	0	0	0	0	0	9
03:00	0	4	0	0	0	0	0	0	0	0	0	0	0	4
04:00	0	11	1	0	0	0	0	0	0	0	0	0	0	12
05:00	0	45	6	0	0	0	0	0	0	0	0	0	0	51
06:00	3	146	20	0	2	0	0	0	0	0	0	0	0	171
07:00	**9**	**408**	**58**	0	**6**	0	0	0	0	0	0	0	0	**481**
08:00	5	212	29	0	3	0	0	0	0	0	0	0	0	249
09:00	5	204	29	0	3	0	0	0	0	0	0	0	0	241
10:00	4	184	25	0	2	0	0	0	0	0	0	0	0	215
11:00	6	242	34	0	4	0	0	0	0	0	0	0	0	286
12 PM	5	253	37	0	4	0	0	0	0	0	0	0	0	299
13:00	4	217	32	0	4	0	0	0	0	0	0	0	0	257
14:00	9	**356**	**50**	0	**5**	0	0	0	0	0	0	0	0	**420**
15:00	9	304	43	0	4	0	0	0	0	0	0	0	0	360
16:00	**12**	294	42	0	4	0	0	0	0	0	0	0	0	352
17:00	8	263	36	0	4	0	0	0	0	0	0	0	0	311
18:00	6	226	31	0	4	0	0	0	0	0	0	0	0	267
19:00	5	181	27	0	3	0	0	0	0	0	0	0	0	216
20:00	5	152	21	0	1	0	0	0	0	0	0	0	0	179
21:00	3	88	12	0	0	0	0	0	0	0	0	0	0	103
22:00	1	77	11	0	0	0	0	0	0	0	0	0	0	89
23:00	0	58	9	0	0	0	0	0	0	0	0	0	0	67
Day Total	99	3957	556	0	53	0	0	0	0	0	0	0	0	4665
Percent	2.1%	84.8%	11.9%	0.0%	1.1%	0.0%	0.0%	0.0%	0.0%	0.0%	0.0%	0.0%	0.0%	
AM Peak	07:00	07:00	07:00		07:00									07:00
Vol.	9	408	58		6									481
PM Peak	16:00	14:00	14:00		14:00									14:00
Vol.	12	356	50		5									420

Location : West Road South of
Location : Crosby Street
City/State: Milford, NH
Counter : 13735
Southbound, Northbound

Accurate Counts
978-664-2565

517840C2
Site Code: 51784002

Start Time	Bikes	Cars & Trailers	2 Axle Long	Buses	2 Axle 6 Tire	3 Axle Single	4 Axle Single	<5 Axl Double	5 Axle Double	>6 Axl Double	<6 Axl Multi	6 Axle Multi	>6 Axl Multi	Total
06/03/06	0	28	3	0	0	0	0	0	0	0	0	0	0	31
01:00	0	15	2	0	0	0	0	0	0	0	0	0	0	17
02:00	0	14	1	0	0	0	0	0	0	0	0	0	0	15
03:00	0	6	0	0	0	0	0	0	0	0	0	0	0	6
04:00	0	9	1	0	0	0	0	0	0	0	0	0	0	10
05:00	0	22	3	0	0	0	0	0	0	0	0	0	0	25
06:00	0	49	7	0	0	0	0	0	0	0	0	0	0	56
07:00	1	81	12	0	0	0	0	0	0	0	0	0	0	94
08:00	**6**	140	19	0	1	0	0	0	0	0	0	0	0	166
09:00	4	177	25	0	2	0	0	0	0	0	0	0	0	208
10:00	5	180	26	0	**3**	0	0	0	0	0	0	0	0	214
11:00	5	**198**	**29**	0	2	0	0	0	0	0	0	0	0	**234**
12 PM	**5**	**240**	**35**	0	**4**	0	0	0	0	0	0	0	0	**284**
13:00	4	187	27	0	3	0	0	0	0	0	0	0	0	221
14:00	4	165	24	0	1	0	0	0	0	0	0	0	0	194
15:00	4	169	24	0	2	0	0	0	0	0	0	0	0	199
16:00	4	173	24	0	2	0	0	0	0	0	0	0	0	203
17:00	4	148	21	0	1	0	0	0	0	0	0	0	0	174
18:00	4	158	22	0	1	0	0	0	0	0	0	0	0	185
19:00	4	158	22	0	1	0	0	0	0	0	0	0	0	185
20:00	3	100	14	0	0	0	0	0	0	0	0	0	0	117
21:00	2	93	14	0	0	0	0	0	0	0	0	0	0	109
22:00	1	75	11	0	0	0	0	0	0	0	0	0	0	87
23:00	0	47	7	0	0	0	0	0	0	0	0	0	0	54
Day Total	60	2632	373	0	23	0	0	0	0	0	0	0	0	3088
Percent	1.9%	85.2%	12.1%	0.0%	0.7%	0.0%	0.0%	0.0%	0.0%	0.0%	0.0%	0.0%	0.0%	
AM Peak	08:00	11:00	11:00		10:00									11:00
Vol.	6	198	29		3									234
PM Peak	12:00	12:00	12:00		12:00									12:00
Vol.	5	240	35		4									284

Location : West Road South of
Location : Crosby Street
City/State: Milford, NH
Counter : 13735
Southbound, Northbound

Accurate Counts
978-664-2565

517840C2
Site Code: 51784002

Start Time	Bikes	Cars & Trailers	2 Axle Long	Buses	2 Axle 6 Tire	3 Axle Single	4 Axle Single	<5 Axl Double	5 Axle Double	>6 Axl Double	<6 Axl Multi	6 Axle Multi	>6 Axl Multi	Total
06/04/06	0	28	4	0	0	0	0	0	0	0	0	0	0	32
01:00	0	23	3	0	0	0	0	0	0	0	0	0	0	26
02:00	0	7	0	0	0	0	0	0	0	0	0	0	0	7
03:00	0	6	0	0	0	0	0	0	0	0	0	0	0	6
04:00	0	10	0	0	0	0	0	0	0	0	0	0	0	10
05:00	0	25	4	0	0	0	0	0	0	0	0	0	0	29
06:00	0	35	5	0	0	0	0	0	0	0	0	0	0	40
07:00	0	66	10	0	0	0	0	0	0	0	0	0	0	76
08:00	2	74	10	0	0	0	0	0	0	0	0	0	0	86
09:00	**4**	148	21	0	0	0	0	0	0	0	0	0	0	173
10:00	4	**164**	**23**	0	**1**	0	0	0	0	0	0	0	0	**192**
11:00	4	154	22	0	0	0	0	0	0	0	0	0	0	180
12 PM	**4**	**218**	**32**	0	3	0	0	0	0	0	0	0	0	**257**
13:00	4	189	27	0	3	0	0	0	0	0	0	0	0	223
14:00	4	172	24	0	3	0	0	0	0	0	0	0	0	203
15:00	4	181	24	0	**4**	0	0	0	0	0	0	0	0	213
16:00	4	164	23	0	2	0	0	0	0	0	0	0	0	193
17:00	4	188	26	0	2	0	0	0	0	0	0	0	0	220
18:00	4	140	20	0	0	0	0	0	0	0	0	0	0	164
19:00	4	145	21	0	0	0	0	0	0	0	0	0	0	170
20:00	4	102	13	0	0	0	0	0	0	0	0	0	0	119
21:00	0	68	11	0	0	0	0	0	0	0	0	0	0	79
22:00	0	34	5	0	0	0	0	0	0	0	0	0	0	39
23:00	0	30	4	0	0	0	0	0	0	0	0	0	0	34
Day Total	50	2371	332	0	18	0	0	0	0	0	0	0	0	2771
Percent	1.8%	85.6%	12.0%	0.0%	0.6%	0.0%	0.0%	0.0%	0.0%	0.0%	0.0%	0.0%	0.0%	
AM Peak	09:00	10:00	10:00		10:00									10:00
Vol.	4	164	23		1									192
PM Peak	12:00	12:00	12:00		15:00									12:00
Vol.	4	218	32		4									257

Location : West Road South of
Location : Crosby Street
City/State: Milford, NH
Counter : 13735
Southbound, Northbound

Accurate Counts
978-664-2565

517840C2
Site Code: 51784002

Start Time	Bikes	Cars & Trailers	2 Axle Long	Buses	2 Axle 6 Tire	3 Axle Single	4 Axle Single	<5 Axl Double	5 Axle Double	>6 Axl Double	<6 Axl Multi	6 Axle Multi	>6 Axl Multi	Total
06/05/06	0	14	1	0	0	0	0	0	0	0	0	0	0	15
01:00	0	10	1	0	0	0	0	0	0	0	0	0	0	11
02:00	0	7	0	0	0	0	0	0	0	0	0	0	0	7
03:00	0	7	1	0	0	0	0	0	0	0	0	0	0	8
04:00	0	17	2	0	0	0	0	0	0	0	0	0	0	19
05:00	0	**40**	**6**	0	0	0	0	0	0	0	0	0	0	**46**
06:00	*	*	*	*	*	*	*	*	*	*	*	*	*	*
07:00	*	*	*	*	*	*	*	*	*	*	*	*	*	*
08:00	*	*	*	*	*	*	*	*	*	*	*	*	*	*
09:00	*	*	*	*	*	*	*	*	*	*	*	*	*	*
10:00	*	*	*	*	*	*	*	*	*	*	*	*	*	*
11:00	*	*	*	*	*	*	*	*	*	*	*	*	*	*
12 PM	*	*	*	*	*	*	*	*	*	*	*	*	*	*
13:00	*	*	*	*	*	*	*	*	*	*	*	*	*	*
14:00	*	*	*	*	*	*	*	*	*	*	*	*	*	*
15:00	*	*	*	*	*	*	*	*	*	*	*	*	*	*
16:00	*	*	*	*	*	*	*	*	*	*	*	*	*	*
17:00	*	*	*	*	*	*	*	*	*	*	*	*	*	*
18:00	*	*	*	*	*	*	*	*	*	*	*	*	*	*
19:00	*	*	*	*	*	*	*	*	*	*	*	*	*	*
20:00	*	*	*	*	*	*	*	*	*	*	*	*	*	*
21:00	*	*	*	*	*	*	*	*	*	*	*	*	*	*
22:00	*	*	*	*	*	*	*	*	*	*	*	*	*	*
23:00	*	*	*	*	*	*	*	*	*	*	*	*	*	*
Day Total	0	95	11	0	0	0	0	0	0	0	0	0	0	106
Percent	0.0%	89.6%	10.4%	0.0%	0.0%	0.0%	0.0%	0.0%	0.0%	0.0%	0.0%	0.0%	0.0%	
AM Peak		05:00	05:00											05:00
Vol.		40	6											46
PM Peak Vol.														
Grand Total	1434	70485	9459	300	754	142	5	129	23	4	0	0	0	82735
Percent	1.7%	85.2%	11.4%	0.4%	0.9%	0.2%	0.0%	0.2%	0.0%	0.0%	0.0%	0.0%	0.0%	

Attachment D-6

Automatic Traffic Recorder Data – Union Street south of Garden Street

Accurate Counts
978-664-2565

Location : Union Street South of
Location : Garden Street
City/State: Milford, NH
Counter : 9574

51784003
Site Code: 51784003

Start Time	06-May-0 Sat	SB Morning	SB Afternoon	Hour Totals Morning	Hour Totals Afternoon	NB Morning	NB Afternoon	Hour Totals Morning	Hour Totals Afternoon	Combined Totals Morning	Combined Totals Afternoon
12:00		3	48			4	38				
12:15		7	40			6	53				
12:30		11	30			5	46				
12:45		1	48	22	166	6	36	21	173	43	339
01:00		6	48			4	51				
01:15		3	40			4	39				
01:30		1	49			2	38				
01:45		5	38	15	175	3	46	13	174	28	349
02:00		1	28			0	36				
02:15		0	40			0	33				
02:30		1	28			1	44				
02:45		1	42	3	138	1	34	2	147	5	285
03:00		0	32			4	32				
03:15		4	40			3	54				
03:30		0	33			3	40				
03:45		1	38	5	143	0	36	10	162	15	305
04:00		0	26			2	30				
04:15		2	32			3	37				
04:30		2	37			1	38				
04:45		3	42	7	137	0	38	6	143	13	280
05:00		1	36			0	38				
05:15		1	36			6	46				
05:30		4	40			7	46				
05:45		3	49	9	161	4	26	17	156	26	317
06:00		2	23			6	29				
06:15		6	21			10	34				
06:30		5	29			9	26				
06:45		12	24	25	97	14	23	39	112	64	209
07:00		3	18			16	24				
07:15		14	22			14	21				
07:30		20	25			28	16				
07:45		18	16	55	81	32	22	90	83	145	164
08:00		18	24			46	12				
08:15		21	10			48	10				
08:30		28	18			41	20				
08:45		36	10	103	62	35	16	170	58	273	120
09:00		34	12			34	10				
09:15		32	21			37	16				
09:30		27	16			45	16				
09:45		32	26	125	75	52	12	168	54	293	129
10:00		64	10			32	9				
10:15		58	12			48	8				
10:30		62	10			38	8				
10:45		50	14	234	46	56	5	174	30	408	76
11:00		68	11			69	8				
11:15		74	4			42	2				
11:30		68	6			46	6				
11:45		76	4	286	25	50	4	207	20	493	45
Total		889	1306			917	1312			1806	2618
Percent		40.5%	59.5%			41.1%	58.9%			40.8%	59.2%

Accurate Counts
978-664-2565

Location : Union Street South of
Location : Garden Street
City/State: Milford, NH
Counter : 9574

51784003
Site Code: 51784003

Start Time	07-May-0 Sun	SB Morning	SB Afternoon	Hour Totals Morning	Hour Totals Afternoon	NB Morning	NB Afternoon	Hour Totals Morning	Hour Totals Afternoon	Combined Totals Morning	Combined Totals Afternoon
12:00		4	42			7	36				
12:15		4	40			7	40				
12:30		5	47			6	26				
12:45		8	38	21	167	8	27	28	129	49	296
01:00		8	36			3	34				
01:15		2	29			4	28				
01:30		5	31			5	44				
01:45		3	40	18	136	1	38	13	144	31	280
02:00		2	33			4	24				
02:15		3	30			3	24				
02:30		2	28			0	24				
02:45		2	26	9	117	0	29	7	101	16	218
03:00		2	22			2	35				
03:15		1	26			2	45				
03:30		1	24			0	22				
03:45		3	23	7	95	2	22	6	124	13	219
04:00		2	34			0	26				
04:15		0	25			1	28				
04:30		0	32			0	28				
04:45		3	23	5	114	4	18	5	100	10	214
05:00		4	28			3	23				
05:15		0	28			2	25				
05:30		1	20			4	28				
05:45		2	31	7	107	5	23	14	99	21	206
06:00		3	33			4	24				
06:15		2	18			4	22				
06:30		5	28			7	20				
06:45		1	20	11	99	17	16	32	82	43	181
07:00		3	25			9	22				
07:15		7	22			15	18				
07:30		12	17			17	18				
07:45		14	16	36	80	23	16	64	74	100	154
08:00		10	28			21	20				
08:15		6	18			33	12				
08:30		16	15			22	18				
08:45		10	12	42	73	37	3	113	53	155	126
09:00		18	14			34	12				
09:15		16	6			24	9				
09:30		31	4			29	7				
09:45		14	4	79	28	50	7	137	35	216	63
10:00		26	10			30	4				
10:15		18	6			36	3				
10:30		15	7			32	4				
10:45		24	4	83	27	38	2	136	13	219	40
11:00		28	2			30	2				
11:15		26	1			28	2				
11:30		32	2			32	5				
11:45		32	2	118	7	36	2	126	11	244	18
Total		436	1050			681	965			1117	2015
Percent		29.3%	70.7%			41.4%	58.6%			35.7%	64.3%

Accurate Counts
978-664-2565

Location : Union Street South of
Location : Garden Street
City/State: Milford, NH
Counter : 9574

51784003
Site Code: 51784003

Start Time	08-May-0 Mon	SB Morning	SB Afternoon	Hour Totals Morning	Hour Totals Afternoon	NB Morning	NB Afternoon	Hour Totals Morning	Hour Totals Afternoon	Combined Totals Morning	Combined Totals Afternoon
12:00		1	29			1	26				
12:15		0	24			1	32				
12:30		1	32			2	35				
12:45		1	26	3	111	1	34	5	127	8	238
01:00		2	27			0	29				
01:15		6	25			0	34				
01:30		1	27			1	34				
01:45		0	28	9	107	1	30	2	127	11	234
02:00		0	35			0	32				
02:15		0	36			0	72				
02:30		2	38			1	49				
02:45		1	51	3	160	1	48	2	201	5	361
03:00		0	36			0	28				
03:15		0	42			1	39				
03:30		0	40			4	45				
03:45		1	35	1	153	2	58	7	170	8	323
04:00		2	42			1	41				
04:15		1	22			0	40				
04:30		0	50			4	36				
04:45		1	50	4	164	2	44	7	161	11	325
05:00		1	50			5	37				
05:15		2	49			6	66				
05:30		8	29			8	32				
05:45		7	16	18	144	15	34	34	169	52	313
06:00		5	27			23	26				
06:15		9	12			20	16				
06:30		16	30			16	24				
06:45		28	28	58	97	24	36	83	102	141	199
07:00		45	38			38	41				
07:15		69	20			44	28				
07:30		58	42			59	32				
07:45		38	26	210	126	38	29	179	130	389	256
08:00		22	24			27	18				
08:15		36	27			38	12				
08:30		39	21			52	18				
08:45		24	15	121	87	42	8	159	56	280	143
09:00		30	15			26	8				
09:15		26	13			39	6				
09:30		18	16			19	6				
09:45		22	19	96	63	34	16	118	36	214	99
10:00		13	9			28	9				
10:15		17	10			30	5				
10:30		30	4			16	3				
10:45		21	6	81	29	26	4	100	21	181	50
11:00		17	2			20	4				
11:15		25	3			28	1				
11:30		24	4			25	5				
11:45		21	1	87	10	28	1	101	11	188	21
Total		691	1251			797	1311			1488	2562
Percent		35.6%	64.4%			37.8%	62.2%			36.7%	63.3%

Accurate Counts
978-664-2565

Location : Union Street South of
Location : Garden Street
City/State: Milford, NH
Counter : 9574

51784003
Site Code: 51784003

Start Time	09-May-0 Tue	SB Morning	SB Afternoon	Hour Totals Morning	Hour Totals Afternoon	NB Morning	NB Afternoon	Hour Totals Morning	Hour Totals Afternoon	Combined Totals Morning	Combined Totals Afternoon
12:00		4	31			2	30				
12:15		1	30			2	36				
12:30		3	26			0	42				
12:45		1	22	9	109	0	29	4	137	13	246
01:00		2	35			0	34				
01:15		1	30			0	30				
01:30		1	32			1	34				
01:45		0	33	4	130	0	18	1	116	5	246
02:00		0	42			1	38				
02:15		0	46			1	70				
02:30		1	46			0	46				
02:45		0	47	1	181	0	50	2	204	3	385
03:00		0	47			0	37				
03:15		0	48			1	38				
03:30		1	43			1	46				
03:45		1	38	2	176	2	53	4	174	6	350
04:00		0	54			1	38				
04:15		1	42			0	41				
04:30		0	48			6	40				
04:45		3	45	4	189	2	45	9	164	13	353
05:00		6	39			1	56				
05:15		4	48			6	48				
05:30		8	63			9	36				
05:45		5	40	23	190	15	34	31	174	54	364
06:00		8	38			20	21				
06:15		8	26			22	32				
06:30		16	40			34	32				
06:45		18	28	50	132	23	42	99	127	149	259
07:00		40	24			34	23				
07:15		68	38			56	36				
07:30		58	20			59	34				
07:45		35	30	201	112	46	21	195	114	396	226
08:00		35	12			44	17				
08:15		60	26			44	18				
08:30		29	20			39	11				
08:45		35	21	159	79	62	14	189	60	348	139
09:00		22	12			32	11				
09:15		27	13			21	8				
09:30		12	18			37	6				
09:45		19	13	80	56	26	8	116	33	196	89
10:00		28	8			30	4				
10:15		12	8			23	2				
10:30		22	4			26	2				
10:45		29	5	91	25	24	5	103	13	194	38
11:00		16	2			35	4				
11:15		22	5			38	1				
11:30		26	5			21	5				
11:45		40	3	104	15	31	5	125	15	229	30
Total		728	1394			878	1331			1606	2725
Percent		34.3%	65.7%			39.7%	60.3%			37.1%	62.9%

Accurate Counts
978-664-2565

Location : Union Street South of
Location : Garden Street
City/State: Milford, NH
Counter : 9574

51784003
Site Code: 51784003

Start Time	10-May-0 Wed	SB Morning	SB Afternoon	Hour Totals Morning	Hour Totals Afternoon	NB Morning	NB Afternoon	Hour Totals Morning	Hour Totals Afternoon	Combined Totals Morning	Combined Totals Afternoon
12:00		2	31			0	27				
12:15		4	29			2	36				
12:30		3	20			0	32				
12:45		1	38	10	118	1	26	3	121	13	239
01:00		1	25			0	26				
01:15		0	23			1	34				
01:30		0	23			1	37				
01:45		2	41	3	112	1	20	3	117	6	229
02:00		0	38			1	32				
02:15		0	59			1	77				
02:30		0	34			0	45				
02:45		3	46	3	177	2	44	4	198	7	375
03:00		0	40			0	49				
03:15		2	46			1	39				
03:30		0	49			4	39				
03:45		3	42	5	177	3	44	8	171	13	348
04:00		0	48			0	44				
04:15		0	32			2	46				
04:30		2	48			4	40				
04:45		6	36	8	164	5	46	11	176	19	340
05:00		2	27			2	45				
05:15		3	42			8	48				
05:30		5	44			8	48				
05:45		8	32	18	145	13	36	31	177	49	322
06:00		3	26			14	26				
06:15		9	34			28	26				
06:30		16	34			24	29				
06:45		36	32	64	126	24	19	90	100	154	226
07:00		34	25			42	18				
07:15		68	19			58	29				
07:30		66	14			66	22				
07:45		41	27	209	85	35	23	201	92	410	177
08:00		23	18			31	12				
08:15		36	27			42	17				
08:30		34	14			41	23				
08:45		42	25	135	84	48	17	162	69	297	153
09:00		13	15			30	7				
09:15		19	22			34	10				
09:30		30	12			24	13				
09:45		21	15	83	64	28	3	116	33	199	97
10:00		18	10			30	8				
10:15		20	10			32	5				
10:30		12	5			26	4				
10:45		18	3	68	28	24	0	112	17	180	45
11:00		26	4			30	5				
11:15		20	2			34	4				
11:30		20	6			28	8				
11:45		33	3	99	15	44	0	136	17	235	32
Total		705	1295			877	1288			1582	2583
Percent		35.3%	64.8%			40.5%	59.5%			38.0%	62.0%

Accurate Counts
978-664-2565

Location : Union Street South of
Location : Garden Street
City/State: Milford, NH
Counter : 9574

51784003
Site Code: 51784003

Start	11-May-0	SB		Hour Totals		NB		Hour Totals		Combined Totals	
Time	Thu	Morning	Afternoon	Morning	Afternoon	Morning	Afternoon	Morning	Afternoon	Morning	Afternoon
12:00		4	24			2	42				
12:15		3	36			3	34				
12:30		3	27			1	26				
12:45		2	32	12	119	1	34	7	136	19	255
01:00		0	20			1	27				
01:15		0	32			1	26				
01:30		1	23			0	23				
01:45		1	32	2	107	1	33	3	109	5	216
02:00		0	45			5	43				
02:15		0	51			0	84				
02:30		0	56			0	40				
02:45		1	44	1	196	0	45	5	212	6	408
03:00		1	36			0	45				
03:15		1	34			2	34				
03:30		0	39			3	38				
03:45		2	42	4	151	1	45	6	162	10	313
04:00		0	31			0	44				
04:15		0	34			1	44				
04:30		1	52			2	41				
04:45		2	46	3	163	3	42	6	171	9	334
05:00		4	50			2	52				
05:15		3	54			3	63				
05:30		7	40			11	41				
05:45		6	44	20	188	14	42	30	198	50	386
06:00		8	49			19	35				
06:15		8	34			22	25				
06:30		11	29			22	46				
06:45		33	42	60	154	27	54	90	160	150	314
07:00		39	30			34	40				
07:15		66	34			50	45				
07:30		46	39			60	30				
07:45		34	36	185	139	32	20	176	135	361	274
08:00		20	30			48	24				
08:15		49	15			45	27				
08:30		28	39			43	20				
08:45		22	20	119	104	38	13	174	84	293	188
09:00		27	30			22	9				
09:15		19	14			22	9				
09:30		21	18			22	10				
09:45		22	7	89	69	48	8	114	36	203	105
10:00		30	8			28	6				
10:15		20	9			34	9				
10:30		16	9			26	4				
10:45		28	7	94	33	32	5	120	24	214	57
11:00		22	4			25	4				
11:15		30	4			25	5				
11:30		20	7			28	5				
11:45		24	2	96	17	42	1	120	15	216	32
Total		685	1440			851	1442			1536	2882
Percent		32.2%	67.8%			37.1%	62.9%			34.8%	65.2%

Accurate Counts
978-664-2565

Location : Union Street South of
Location : Garden Street
City/State: Milford, NH
Counter : 9574

51784003
Site Code: 51784003

Start Time	12-May-0 Fri	SB Morning	SB Afternoon	Hour Totals Morning	Hour Totals Afternoon	NB Morning	NB Afternoon	Hour Totals Morning	Hour Totals Afternoon	Combined Totals Morning	Combined Totals Afternoon
12:00		4	43			2	36				
12:15		0	54			2	39				
12:30		3	38			3	30				
12:45		2	42	9	177	2	27	9	132	18	309
01:00		0	32			1	32				
01:15		1	25			1	40				
01:30		1	24			2	22				
01:45		0	36	2	117	0	35	4	129	6	246
02:00		2	36			1	40				
02:15		2	55			2	78				
02:30		2	62			0	44				
02:45		0	40	6	193	0	46	3	208	9	401
03:00		0	26			0	46				
03:15		0	36			1	46				
03:30		1	64			4	46				
03:45		1	54	2	180	1	44	6	182	8	362
04:00		0	42			1	58				
04:15		0	40			4	54				
04:30		1	35			2	40				
04:45		2	42	3	159	4	42	11	194	14	353
05:00		5	43			4	52				
05:15		1	38			6	47				
05:30		9	38			12	48				
05:45		7	41	22	160	15	41	37	188	59	348
06:00		7	42			20	41				
06:15		6	30			18	42				
06:30		12	36			23	36				
06:45		25	30	50	138	28	34	89	153	139	291
07:00		33	28			40	32				
07:15		68	19			57	20				
07:30		68	20			62	27				
07:45		30	24	199	91	35	18	194	97	393	188
08:00		26	30			41	30				
08:15		48	23			36	16				
08:30		32	12			48	19				
08:45		42	9	148	74	54	16	179	81	327	155
09:00		30	20			36	15				
09:15		30	19			30	12				
09:30		21	10			27	16				
09:45		18	14	99	63	39	14	132	57	231	120
10:00		38	15			30	11				
10:15		14	7			35	6				
10:30		32	3			23	6				
10:45		23	14	107	39	31	11	119	34	226	73
11:00		38	9			28	12				
11:15		30	14			35	4				
11:30		44	13			34	10				
11:45		40	10	152	46	30	4	127	30	279	76
Total		799	1437			910	1485			1709	2922
Percent		35.7%	64.3%			38.0%	62.0%			36.9%	63.1%

Accurate Counts
978-664-2565

Location : Union Street South of
Location : Garden Street
City/State: Milford, NH
Counter : 9574

51784003
Site Code: 51784003

Start	13-May-0	SB		Hour Totals		NB		Hour Totals		Combined Totals	
Time	Sat	Morning	Afternoon	Morning	Afternoon	Morning	Afternoon	Morning	Afternoon	Morning	Afternoon
12:00		6	61			5	42				
12:15		2	46			4	46				
12:30		4	42			4	30				
12:45		1	27	13	176	4	29	17	147	30	323
01:00		2	35			2	33				
01:15		6	44			2	26				
01:30		2	34			3	24				
01:45		0	42	10	155	2	34	9	117	19	272
02:00		2	28			1	34				
02:15		3	28			0	34				
02:30		2	37			1	28				
02:45		0	28	7	121	1	32	3	128	10	249
03:00		0	32			1	30				
03:15		1	17			0	30				
03:30		1	17			2	27				
03:45		0	26	2	92	0	30	3	117	5	209
04:00		2	21			2	28				
04:15		1	24			4	28				
04:30		1	33			1	23				
04:45		1	21	5	99	1	28	8	107	13	206
05:00		3	29			3	26				
05:15		1	32			3	27				
05:30		1	18			1	18				
05:45		4	32	9	111	4	23	11	94	20	205
06:00		0	21			6	20				
06:15		1	13			5	16				
06:30		4	17			10	22				
06:45		6	14	11	65	18	20	39	78	50	143
07:00		9	18			16	15				
07:15		12	16			28	20				
07:30		11	16			17	22				
07:45		13	20	45	70	32	19	93	76	138	146
08:00		14	18			28	16				
08:15		7	16			43	22				
08:30		26	14			32	18				
08:45		22	9	69	57	31	10	134	66	203	123
09:00		26	16			30	8				
09:15		18	10			36	16				
09:30		29	15			40	6				
09:45		50	15	123	56	50	10	156	40	279	96
10:00		56	8			48	12				
10:15		52	5			40	10				
10:30		38	11			40	7				
10:45		47	8	193	32	47	10	175	39	368	71
11:00		62	10			62	10				
11:15		41	13			37	4				
11:30		43	5			37	9				
11:45		61	7	207	35	28	6	164	29	371	64
Total		694	1069			812	1038			1506	2107
Percent		39.4%	60.6%			43.9%	56.1%			41.7%	58.3%

Accurate Counts
978-664-2565

Location : Union Street South of
Location : Garden Street
City/State: Milford, NH
Counter : 9574

51784003
Site Code: 51784003

Start	14-May-0	SB		Hour Totals		NB		Hour Totals		Combined Totals	
Time	Sun	Morning	Afternoon	Morning	Afternoon	Morning	Afternoon	Morning	Afternoon	Morning	Afternoon
12:00		6	31			6	19				
12:15		6	26			5	18				
12:30		4	23			8	31				
12:45		5	30	21	110	1	24	20	92	41	202
01:00		7	30			1	34				
01:15		4	18			6	33				
01:30		4	21			3	23				
01:45		2	29	17	98	5	35	15	125	32	223
02:00		2	20			2	26				
02:15		0	14			1	23				
02:30		2	26			1	25				
02:45		0	17	4	77	1	19	5	93	9	170
03:00		0	17			0	21				
03:15		0	16			0	26				
03:30		2	22			2	32				
03:45		0	26	2	81	1	21	3	100	5	181
04:00		2	31			2	28				
04:15		3	28			1	26				
04:30		0	24			0	15				
04:45		1	22	6	105	0	27	3	96	9	201
05:00		1	23			4	22				
05:15		1	21			0	25				
05:30		1	28			1	27				
05:45		1	33	4	105	3	15	8	89	12	194
06:00		0	22			10	27				
06:15		1	21			6	18				
06:30		1	20			7	21				
06:45		2	24	4	87	10	22	33	88	37	175
07:00		2	23			10	26				
07:15		7	34			6	24				
07:30		9	28			10	14				
07:45		8	16	26	101	9	23	35	87	61	188
08:00		6	31			18	13				
08:15		13	19			19	15				
08:30		6	18			18	10				
08:45		8	16	33	84	30	11	85	49	118	133
09:00		9	11			20	18				
09:15		12	9			22	5				
09:30		21	5			26	8				
09:45		24	7	66	32	44	14	112	45	178	77
10:00		21	9			35	6				
10:15		21	9			36	9				
10:30		16	8			22	6				
10:45		20	8	78	34	35	2	128	23	206	57
11:00		26	3			25	5				
11:15		29	4			20	3				
11:30		26	3			21	6				
11:45		34	5	115	15	30	4	96	18	211	33
Total		376	929			543	905			919	1834
Percent		28.8%	71.2%			37.5%	62.5%			33.4%	66.6%

Accurate Counts
978-664-2565

Location : Union Street South of
Location : Garden Street
City/State: Milford, NH
Counter : 9574

51784003
Site Code: 51784003

Start	15-May-0	SB		Hour Totals		NB		Hour Totals		Combined Totals	
Time	Mon	Morning	Afternoon	Morning	Afternoon	Morning	Afternoon	Morning	Afternoon	Morning	Afternoon
12:00		5	36			6	36				
12:15		4	20			4	23				
12:30		1	29			2	30				
12:45		1	22	11	107	8	48	20	137	31	244
01:00		1	33			0	34				
01:15		5	28			2	30				
01:30		2	28			0	28				
01:45		1	29	9	118	4	32	6	124	15	242
02:00		1	26			1	39				
02:15		0	16			0	26				
02:30		1	28			1	37				
02:45		1	31	3	101	2	27	4	129	7	230
03:00		0	26			2	44				
03:15		0	38			1	32				
03:30		1	46			3	40				
03:45		0	26	1	136	2	24	8	140	9	276
04:00		0	26			0	38				
04:15		0	46			2	45				
04:30		3	32			3	44				
04:45		2	40	5	144	3	45	8	172	13	316
05:00		3	38			3	44				
05:15		0	39			9	45				
05:30		6	32			10	30				
05:45		4	28	13	137	10	32	32	151	45	288
06:00		8	33			22	23				
06:15		7	26			19	22				
06:30		14	22			18	29				
06:45		12	20	41	101	21	33	80	107	121	208
07:00		17	24			27	12				
07:15		16	26			24	17				
07:30		18	16			29	17				
07:45		17	27	68	93	35	16	115	62	183	155
08:00		14	19			33	12				
08:15		13	10			28	14				
08:30		18	12			22	12				
08:45		30	12	75	53	30	22	113	60	188	113
09:00		18	12			30	18				
09:15		16	18			34	11				
09:30		16	12			28	3				
09:45		22	8	72	50	28	6	120	38	192	88
10:00		16	7			24	4				
10:15		20	9			25	2				
10:30		30	5			36	7				
10:45		20	7	86	28	22	3	107	16	193	44
11:00		26	7			30	8				
11:15		16	8			26	9				
11:30		20	3			32	2				
11:45		25	4	87	22	30	4	118	23	205	45
Total		471	1090			731	1159			1202	2249
Percent		30.2%	69.8%			38.7%	61.3%			34.8%	65.2%

Accurate Counts
978-664-2565

Location : Union Street South of
Location : Garden Street
City/State: Milford. NH
Counter : 9574

51784003
Site Code: 51784003

Start Time	16-May-0 Tue	SB Morning	SB Afternoon	Hour Totals Morning	Hour Totals Afternoon	NB Morning	NB Afternoon	Hour Totals Morning	Hour Totals Afternoon	Combined Totals Morning	Combined Totals Afternoon
12:00		0	33			1	26				
12:15		4	39			2	28				
12:30		2	34			2	33				
12:45		0	20	6	126	1	39	6	126	12	252
01:00		1	30			0	34				
01:15		2	25			0	32				
01:30		0	38			1	22				
01:45		1	38	4	131	5	33	6	121	10	252
02:00		0	36			0	24				
02:15		0	54			0	80				
02:30		0	36			1	46				
02:45		2	59	2	185	2	36	3	186	5	371
03:00		1	32			0	59				
03:15		1	50			2	44				
03:30		0	36			0	52				
03:45		1	48	3	166	2	46	4	201	7	367
04:00		1	42			1	37				
04:15		0	34			1	34				
04:30		3	36			4	43				
04:45		1	42	5	154	3	40	9	154	14	308
05:00		3	50			6	58				
05:15		3	46			6	52				
05:30		5	51			4	40				
05:45		7	37	18	184	9	32	25	182	43	366
06:00		4	41			21	44				
06:15		8	36			19	33				
06:30		18	26			16	29				
06:45		24	26	54	129	31	33	87	139	141	268
07:00		40	28			37	21				
07:15		88	25			46	24				
07:30		54	23			62	30				
07:45		45	22	227	98	36	20	181	95	408	193
08:00		31	23			43	12				
08:15		38	24			48	14				
08:30		33	22			32	14				
08:45		35	19	137	88	46	12	169	52	306	140
09:00		24	30			30	13				
09:15		26	20			32	10				
09:30		26	14			22	10				
09:45		18	9	94	73	39	8	123	41	217	114
10:00		27	12			24	7				
10:15		26	8			29	4				
10:30		23	9			26	4				
10:45		25	8	101	37	27	6	106	21	207	58
11:00		31	2			38	6				
11:15		27	3			30	3				
11:30		30	6			21	2				
11:45		33	5	121	16	26	1	115	12	236	28
Total		772	1387			834	1330			1606	2717
Percent		35.8%	64.2%			38.5%	61.5%			37.2%	62.8%

Accurate Counts
978-664-2565

Location : Union Street South of
Location : Garden Street
City/State: Milford, NH
Counter : 9574

51784003
Site Code: 51784003

Start Time	17-May-0 Wed	SB Morning	SB Afternoon	Hour Totals Morning	Hour Totals Afternoon	NB Morning	NB Afternoon	Hour Totals Morning	Hour Totals Afternoon	Combined Totals Morning	Combined Totals Afternoon
12:00		8	37			5	29				
12:15		0	28			2	34				
12:30		2	37			3	38				
12:45		2	32	12	134	0	35	10	136	22	270
01:00		1	28			2	42				
01:15		1	50			2	48				
01:30		2	45			0	34				
01:45		0	27	4	150	1	30	5	154	9	304
02:00		1	46			0	34				
02:15		1	40			1	66				
02:30		0	44			0	48				
02:45		2	42	4	172	2	40	3	188	7	360
03:00		1	34			1	40				
03:15		1	39			0	59				
03:30		0	48			1	38				
03:45		0	49	2	170	4	48	6	185	8	355
04:00		2	50			1	36				
04:15		1	36			0	52				
04:30		1	50			4	50				
04:45		1	51	5	187	2	44	7	182	12	369
05:00		1	44			1	64				
05:15		4	58			6	62				
05:30		5	54			8	38				
05:45		6	42	16	198	13	44	28	208	44	406
06:00		5	34			13	38				
06:15		10	34			28	34				
06:30		8	36			32	24				
06:45		18	30	41	134	18	21	91	117	132	251
07:00		30	30			25	36				
07:15		22	32			30	22				
07:30		20	36			33	26				
07:45		31	40	103	138	33	15	121	99	224	237
08:00		26	28			38	21				
08:15		14	20			36	28				
08:30		26	28			34	23				
08:45		38	27	104	103	38	14	146	86	250	189
09:00		52	18			32	14				
09:15		72	10			66	13				
09:30		36	10			40	7				
09:45		20	6	180	44	34	9	172	43	352	87
10:00		20	8			40	6				
10:15		44	8			44	4				
10:30		26	13			32	4				
10:45		34	3	124	32	41	3	157	17	281	49
11:00		28	3			30	3				
11:15		26	7			26	4				
11:30		23	4			16	5				
11:45		38	4	115	18	38	3	110	15	225	33
Total		710	1480			856	1430			1566	2910
Percent		32.4%	67.6%			37.4%	62.6%			35.0%	65.0%

Accurate Counts
978-664-2565

Location : Union Street South of
Location : Garden Street
City/State: Milford, NH
Counter : 9574

51784003
Site Code: 51784003

Start Time	18-May-0 Thu	SB Morning	SB Afternoon	Hour Totals Morning	Hour Totals Afternoon	NB Morning	NB Afternoon	Hour Totals Morning	Hour Totals Afternoon	Combined Totals Morning	Combined Totals Afternoon
12:00		2	*			1	*				
12:15		4	*			0	*				
12:30		1	*			2	*				
12:45		1	*	8	0	0	*	3	0	11	0
01:00		0	*			0	*				
01:15		0	*			1	*				
01:30		0	*			2	*				
01:45		1	*	1	0	1	*	4	0	5	0
02:00		1	*			3	*				
02:15		1	*			1	*				
02:30		1	*			2	*				
02:45		0	*	3	0	0	*	6	0	9	0
03:00		0	*			0	*				
03:15		0	*			0	*				
03:30		0	*			5	*				
03:45		1	*	1	0	0	*	5	0	6	0
04:00		1	*			1	*				
04:15		0	*			1	*				
04:30		1	*			6	*				
04:45		2	*	4	0	3	*	11	0	15	0
05:00		4	*			2	*				
05:15		3	*			8	*				
05:30		7	*			13	*				
05:45		4	*	18	0	13	*	36	0	54	0
06:00		8	*			22	*				
06:15		6	*			15	*				
06:30		9	*			20	*				
06:45		29	*	52	0	24	*	81	0	133	0
07:00		40	*			34	*				
07:15		74	*			44	*				
07:30		51	*			49	*				
07:45		28	*	193	0	32	*	159	0	352	0
08:00		27	*			48	*				
08:15		48	*			46	*				
08:30		26	*			28	*				
08:45		26	*	127	0	46	*	168	0	295	0
09:00		23	*			32	*				
09:15		22	*			30	*				
09:30		28	*			24	*				
09:45		2	*	75	0	6	*	92	0	167	0
10:00		*	*			*	*				
10:15		*	*			*	*				
10:30		*	*			*	*				
10:45		*	*	0	0	*	*	0	0	0	0
11:00		*	*			*	*				
11:15		*	*			*	*				
11:30		*	*			*	*				
11:45		*	*	0	0	*	*	0	0	0	0
Total		482	0			565	0			1047	0
Percent		100.0%	0.0%			100.0%	0.0%			100.0%	0.0%
Grand Total		8438	15128			10252	14996			18690	30124
Percent		35.8%	64.2%			40.6%	59.4%			38.3%	61.7%

ADT Not Calculated

Accurate Counts
978-664-2565

Location : Union Street South of
Location : Garden Street
City/State: Milford, NH
Counter : 16217

517840V3
Site Code: 51784003

Start	18-May-0	SB		Hour Totals		NB		Hour Totals		Combined Totals	
Time	Thu	Morning	Afternoon	Morning	Afternoon	Morning	Afternoon	Morning	Afternoon	Morning	Afternoon
12:00		*	30			*	28				
12:15		*	26			*	31				
12:30		*	37			*	44				
12:45		*	32	0	125	*	24	0	127	0	252
01:00		*	34			*	32				
01:15		*	27			*	28				
01:30		*	25			*	33				
01:45		*	39	0	125	*	26	0	119	0	244
02:00		*	38			*	30				
02:15		*	45			*	87				
02:30		*	40			*	52				
02:45		*	45	0	168	*	36	0	205	0	373
03:00		*	35			*	29				
03:15		*	44			*	34				
03:30		*	39			*	44				
03:45		*	54	0	172	*	53	0	160	0	332
04:00		*	45			*	39				
04:15		*	50			*	37				
04:30		*	41			*	58				
04:45		*	43	0	179	*	54	0	188	0	367
05:00		*	43			*	57				
05:15		*	54			*	61				
05:30		*	52			*	51				
05:45		*	35	0	184	*	47	0	216	0	400
06:00		*	34			*	37				
06:15		*	36			*	29				
06:30		*	36			*	37				
06:45		*	33	0	139	*	42	0	145	0	284
07:00		*	47			*	46				
07:15		*	30			*	32				
07:30		*	38			*	37				
07:45		*	36	0	151	*	22	0	137	0	288
08:00		*	31			*	37				
08:15		*	22			*	30				
08:30		*	40			*	19				
08:45		*	32	0	125	*	8	0	94	0	219
09:00		*	18			*	10				
09:15		*	19			*	9				
09:30		*	10			*	16				
09:45		*	15	0	62	*	6	0	41	0	103
10:00		24	11			24	13				
10:15		21	17			22	7				
10:30		24	6			33	9				
10:45		27	7	96	41	21	6	100	35	196	76
11:00		15	8			22	3				
11:15		19	7			20	1				
11:30		20	6			23	5				
11:45		28	4	82	25	30	7	95	16	177	41
Total		178	1496			195	1483			373	2979
Percent		10.6%	89.4%			11.6%	88.4%			11.1%	88.9%

Accurate Counts
978-664-2565

Location : Union Street South of
Location : Garden Street
City/State: Milford, NH
Counter : 16217

517840V3
Site Code: 51784003

Start Time	19-May-0 Fri	SB Morning	SB Afternoon	Hour Totals Morning	Hour Totals Afternoon	NB Morning	NB Afternoon	Hour Totals Morning	Hour Totals Afternoon	Combined Totals Morning	Combined Totals Afternoon
12:00		5	33			0	36				
12:15		2	33			3	33				
12:30		4	34			2	38				
12:45		4	39	15	139	4	28	9	135	24	274
01:00		1	28			3	32				
01:15		0	34			1	29				
01:30		1	28			1	35				
01:45		0	35	2	125	0	33	5	129	7	254
02:00		0	44			0	26				
02:15		2	39			0	85				
02:30		2	56			2	61				
02:45		0	52	4	191	0	48	2	220	6	411
03:00		0	35			0	41				
03:15		0	35			2	34				
03:30		0	39			3	37				
03:45		2	33	2	142	1	40	6	152	8	294
04:00		0	55			2	35				
04:15		0	50			0	45				
04:30		1	50			3	49				
04:45		1	41	2	196	3	44	8	173	10	369
05:00		0	33			2	57				
05:15		2	44			6	54				
05:30		5	42			8	44				
05:45		7	37	14	156	15	47	31	202	45	358
06:00		3	45			21	38				
06:15		6	32			20	30				
06:30		14	40			22	48				
06:45		25	40	48	157	28	36	91	152	139	309
07:00		33	32			33	25				
07:15		66	26			44	27				
07:30		57	30			49	29				
07:45		22	28	178	116	33	24	159	105	337	221
08:00		22	22			32	17				
08:15		44	15			42	19				
08:30		33	20			43	19				
08:45		31	24	130	81	41	16	158	71	288	152
09:00		22	17			26	17				
09:15		27	18			27	9				
09:30		28	16			32	16				
09:45		20	21	97	72	29	13	114	55	211	127
10:00		22	16			28	19				
10:15		25	17			29	18				
10:30		23	12			16	9				
10:45		24	14	94	59	32	18	105	64	199	123
11:00		18	11			31	5				
11:15		13	10			21	11				
11:30		28	8			22	6				
11:45		26	4	85	33	30	9	104	31	189	64
Total		671	1467			792	1489			1463	2956
Percent		31.4%	68.6%			34.7%	65.3%			33.1%	66.9%

Accurate Counts
978-664-2565

Location : Union Street South of
Location : Garden Street
City/State: Milford, NH
Counter : 16217

517840V3
Site Code: 51784003

Start Time	20-May-0 Sat	SB Morning	SB Afternoon	Hour Totals Morning	Hour Totals Afternoon	NB Morning	NB Afternoon	Hour Totals Morning	Hour Totals Afternoon	Combined Totals Morning	Combined Totals Afternoon
12:00		5	52			5	40				
12:15		4	57			5	56				
12:30		5	48			2	33				
12:45		5	39	19	196	2	43	14	172	33	368
01:00		5	47			1	50				
01:15		5	44			2	48				
01:30		0	45			5	38				
01:45		3	41	13	177	2	51	10	187	23	364
02:00		1	37			2	38				
02:15		0	34			1	43				
02:30		2	41			0	38				
02:45		1	34	4	146	1	34	4	153	8	299
03:00		2	34			1	30				
03:15		2	34			1	39				
03:30		1	34			1	42				
03:45		2	45	7	147	1	37	4	148	11	295
04:00		3	33			2	41				
04:15		0	32			2	42				
04:30		2	27			1	29				
04:45		3	32	8	124	3	24	8	136	16	260
05:00		1	42			0	28				
05:15		0	32			3	24				
05:30		0	25			5	28				
05:45		6	16	7	115	10	28	18	108	25	223
06:00		5	29			6	29				
06:15		4	23			11	23				
06:30		6	34			9	26				
06:45		10	27	25	113	22	37	48	115	73	228
07:00		10	28			25	15				
07:15		12	26			38	18				
07:30		17	22			27	16				
07:45		21	15	60	91	36	22	126	71	186	162
08:00		25	18			40	17				
08:15		40	19			37	16				
08:30		35	14			45	21				
08:45		38	15	138	66	43	8	165	62	303	128
09:00		54	17			55	24				
09:15		43	10			53	10				
09:30		38	24			54	6				
09:45		68	11	203	62	50	10	212	50	415	112
10:00		50	10			52	12				
10:15		57	10			59	11				
10:30		58	9			55	9				
10:45		60	17	225	46	45	10	211	42	436	88
11:00		60	13			50	9				
11:15		73	8			47	9				
11:30		101	10			58	3				
11:45		73	3	307	34	52	4	207	25	514	59
Total		1016	1317			1027	1269			2043	2586
Percent		43.5%	56.5%			44.7%	55.3%			44.1%	55.9%

Accurate Counts
978-664-2565

Location : Union Street South of
Location : Garden Street
City/State: Milford, NH
Counter : 16217

517840V3
Site Code: 51784003

Start Time	21-May-0 Sun	SB Morning	SB Afternoon	Hour Totals Morning	Hour Totals Afternoon	NB Morning	NB Afternoon	Hour Totals Morning	Hour Totals Afternoon	Combined Totals Morning	Combined Totals Afternoon
12:00		5	32			5	36				
12:15		3	25			7	32				
12:30		4	19			7	24				
12:45		4	46	16	122	2	27	21	119	37	241
01:00		5	45			1	36				
01:15		7	38			4	31				
01:30		2	29			7	31				
01:45		2	25	16	137	3	29	15	127	31	264
02:00		2	35			2	29				
02:15		6	29			3	22				
02:30		2	28			2	22				
02:45		2	27	12	119	3	16	10	89	22	208
03:00		2	29			2	29				
03:15		1	36			1	25				
03:30		2	36			1	34				
03:45		3	27	8	128	1	28	5	116	13	244
04:00		0	25			1	23				
04:15		1	30			2	22				
04:30		1	18			1	18				
04:45		0	20	2	93	2	15	6	78	8	171
05:00		2	36			2	20				
05:15		4	21			1	25				
05:30		3	24			2	35				
05:45		0	33	9	114	8	37	13	117	22	231
06:00		0	25			2	38				
06:15		1	20			7	17				
06:30		3	25			5	18				
06:45		6	22	10	92	20	23	34	96	44	188
07:00		7	14			11	26				
07:15		10	24			10	16				
07:30		8	11			14	14				
07:45		15	15	40	64	16	11	51	67	91	131
08:00		5	13			15	15				
08:15		10	25			28	19				
08:30		10	21			29	9				
08:45		18	16	43	75	26	14	98	57	141	132
09:00		17	18			31	20				
09:15		47	14			38	6				
09:30		29	15			33	7				
09:45		20	12	113	59	42	8	144	41	257	100
10:00		18	7			42	6				
10:15		13	9			40	9				
10:30		25	4			32	2				
10:45		22	3	78	23	27	2	141	19	219	42
11:00		31	5			34	6				
11:15		19	4			22	5				
11:30		58	2			41	4				
11:45		26	1	134	12	31	1	128	16	262	28
Total		481	1038			666	942			1147	1980
Percent		31.7%	68.3%			41.4%	58.6%			36.7%	63.3%

Accurate Counts
978-664-2565

Location : Union Street South of
Location : Garden Street
City/State: Milford, NH
Counter : 16217

517840V3
Site Code: 51784003

Start Time	22-May-0 Mon	SB Morning	SB Afternoon	Hour Totals Morning	Hour Totals Afternoon	NB Morning	NB Afternoon	Hour Totals Morning	Hour Totals Afternoon	Combined Totals Morning	Combined Totals Afternoon
12:00		1	31			3	35				
12:15		0	30			0	28				
12:30		3	30			2	40				
12:45		1	28	5	119	0	37	5	140	10	259
01:00		2	32			0	27				
01:15		2	23			0	32				
01:30		1	22			6	32				
01:45		7	31	12	108	5	24	11	115	23	223
02:00		0	45			0	18				
02:15		3	37			2	62				
02:30		1	42			0	44				
02:45		1	43	5	167	0	34	2	158	7	325
03:00		1	48			1	47				
03:15		1	44			0	36				
03:30		1	50			3	45				
03:45		1	43	4	185	3	47	7	175	11	360
04:00		1	47			1	51				
04:15		0	61			1	50				
04:30		2	55			5	33				
04:45		1	43	4	206	3	54	10	188	14	394
05:00		1	38			4	51				
05:15		2	47			3	44				
05:30		6	33			11	45				
05:45		5	35	14	153	15	53	33	193	47	346
06:00		7	38			20	39				
06:15		10	25			22	39				
06:30		16	23			22	47				
06:45		21	39	54	125	19	35	83	160	137	285
07:00		42	36			37	41				
07:15		86	19			48	23				
07:30		51	27			53	23				
07:45		27	37	206	119	34	21	172	108	378	227
08:00		22	28			42	25				
08:15		36	32			31	10				
08:30		38	13			44	12				
08:45		19	34	115	107	44	11	161	58	276	165
09:00		18	21			23	10				
09:15		32	25			25	15				
09:30		21	12			26	4				
09:45		9	8	80	66	31	10	105	39	185	105
10:00		22	11			16	5				
10:15		16	8			32	8				
10:30		18	4			27	5				
10:45		20	6	76	29	31	4	106	22	182	51
11:00		17	4			41	6				
11:15		24	7			31	2				
11:30		31	5			25	3				
11:45		14	2	86	18	33	2	130	13	216	31
Total		661	1402			825	1369			1486	2771
Percent		32.0%	68.0%			37.6%	62.4%			34.9%	65.1%

Accurate Counts
978-664-2565

Location : Union Street South of
Location : Garden Street
City/State: Milford, NH
Counter : 16217

517840V3
Site Code: 51784003

Start Time	23-May-0 Tue	SB Morning	SB Afternoon	Hour Totals Morning	Hour Totals Afternoon	NB Morning	NB Afternoon	Hour Totals Morning	Hour Totals Afternoon	Combined Totals Morning	Combined Totals Afternoon
12:00		2	36			2	32				
12:15		5	43			1	27				
12:30		1	32			0	32				
12:45		3	25	11	136	3	32	6	123	17	259
01:00		0	31			0	39				
01:15		1	24			1	30				
01:30		0	34			0	28				
01:45		1	36	2	125	2	47	3	144	5	269
02:00		0	56			2	31				
02:15		0	62			0	71				
02:30		1	55			0	49				
02:45		0	61	1	234	0	53	2	204	3	438
03:00		0	36			0	46				
03:15		0	36			2	43				
03:30		1	44			1	53				
03:45		0	30	1	146	2	73	5	215	6	361
04:00		0	56			0	41				
04:15		0	44			1	51				
04:30		2	68			6	68				
04:45		1	45	3	213	4	42	11	202	14	415
05:00		0	56			2	64				
05:15		5	77			7	57				
05:30		6	69			8	48				
05:45		4	43	15	245	10	47	27	216	42	461
06:00		5	34			16	52				
06:15		9	37			23	37				
06:30		14	43			25	42				
06:45		26	39	54	153	29	42	93	173	147	326
07:00		32	36			37	34				
07:15		65	35			42	30				
07:30		58	34			60	33				
07:45		27	23	182	128	36	26	175	123	357	251
08:00		32	19			46	30				
08:15		39	30			51	50				
08:30		32	26			27	16				
08:45		23	27	126	102	58	14	182	110	308	212
09:00		28	19			36	9				
09:15		28	21			31	3				
09:30		29	14			39	5				
09:45		24	10	109	64	33	8	139	25	248	89
10:00		20	9			23	11				
10:15		24	9			39	4				
10:30		21	8			23	7				
10:45		37	4	102	30	31	7	116	29	218	59
11:00		24	9			29	3				
11:15		19	8			29	4				
11:30		26	3			20	6				
11:45		31	6	100	26	28	1	106	14	206	40
Total		706	1602			865	1578			1571	3180
Percent		30.6%	69.4%			35.4%	64.6%			33.1%	66.9%

Accurate Counts
978-664-2565

Location : Union Street South of
Location : Garden Street
City/State: Milford, NH
Counter : 16217

517840V3
Site Code: 51784003

Start Time	24-May-0 Wed	SB Morning	SB Afternoon	Hour Totals Morning	Hour Totals Afternoon	NB Morning	NB Afternoon	Hour Totals Morning	Hour Totals Afternoon	Combined Totals Morning	Combined Totals Afternoon
12:00		1	23			2	27				
12:15		2	23			1	24				
12:30		2	39			2	39				
12:45		4	25	9	110	2	25	7	115	16	225
01:00		3	28			0	32				
01:15		0	21			1	36				
01:30		1	24			1	39				
01:45		0	38	4	111	4	23	6	130	10	241
02:00		0	38			0	30				
02:15		0	38			0	71				
02:30		1	45			0	43				
02:45		1	51	2	172	0	44	0	188	2	360
03:00		0	38			0	48				
03:15		0	32			1	39				
03:30		0	48			2	44				
03:45		1	50	1	168	2	57	5	188	6	356
04:00		1	35			1	48				
04:15		1	47			3	38				
04:30		1	36			4	48				
04:45		0	35	3	153	1	50	9	184	12	337
05:00		2	54			2	45				
05:15		3	49			4	52				
05:30		3	42			10	54				
05:45		9	49	17	194	17	43	33	194	50	388
06:00		4	42			13	42				
06:15		8	35			19	25				
06:30		13	35			28	29				
06:45		36	37	61	149	29	35	89	131	150	280
07:00		33	43			32	35				
07:15		70	45			52	30				
07:30		62	31			51	22				
07:45		27	28	192	147	39	38	174	125	366	272
08:00		24	37			27	39				
08:15		37	33			40	17				
08:30		26	26			52	16				
08:45		34	21	121	117	50	18	169	90	290	207
09:00		30	15			28	12				
09:15		29	14			23	7				
09:30		19	15			21	10				
09:45		15	16	93	60	34	11	106	40	199	100
10:00		20	14			16	8				
10:15		17	10			35	10				
10:30		26	11			31	4				
10:45		30	2	93	37	26	6	108	28	201	65
11:00		23	5			27	5				
11:15		32	2			24	3				
11:30		34	5			37	4				
11:45		37	5	126	17	28	2	116	14	242	31
Total		722	1435			822	1427			1544	2862
Percent		33.5%	66.5%			36.5%	63.5%			35.0%	65.0%

Accurate Counts
978-664-2565

Location : Union Street South of
Location : Garden Street
City/State: Milford, NH
Counter : 16217

517840V3
Site Code: 51784003

Start Time	25-May-0 Thu	SB Morning	SB Afternoon	Hour Totals Morning	Hour Totals Afternoon	NB Morning	NB Afternoon	Hour Totals Morning	Hour Totals Afternoon	Combined Totals Morning	Combined Totals Afternoon
12:00		5	32			0	22				
12:15		2	42			3	33				
12:30		3	28			4	31				
12:45		1	32	11	134	1	37	8	123	19	257
01:00		2	35			1	33				
01:15		0	32			0	30				
01:30		0	31			1	26				
01:45		0	35	2	133	1	22	3	111	5	244
02:00		0	32			0	25				
02:15		1	52			3	71				
02:30		0	47			0	52				
02:45		0	51	1	182	1	43	4	191	5	373
03:00		0	48			0	40				
03:15		2	44			1	42				
03:30		0	43			2	44				
03:45		1	62	3	197	4	43	7	169	10	366
04:00		0	45			0	47				
04:15		2	42			2	42				
04:30		2	62			5	58				
04:45		1	68	5	217	4	89	11	236	16	453
05:00		2	46			2	66				
05:15		2	53			6	101				
05:30		5	36			11	83				
05:45		11	52	20	187	14	48	33	298	53	485
06:00		5	48			15	45				
06:15		7	50			16	43				
06:30		19	34			22	44				
06:45		31	42	62	174	33	33	86	165	148	339
07:00		41	38			28	41				
07:15		54	37			48	39				
07:30		59	27			58	43				
07:45		24	33	178	135	40	40	174	163	352	298
08:00		27	43			38	24				
08:15		50	31			40	23				
08:30		31	47			35	28				
08:45		20	32	128	153	49	19	162	94	290	247
09:00		20	26			26	21				
09:15		33	24			28	16				
09:30		28	16			35	12				
09:45		18	16	99	82	41	12	130	61	229	143
10:00		17	14			28	4				
10:15		19	9			23	12				
10:30		25	10			18	3				
10:45		16	5	77	38	25	8	94	27	171	65
11:00		23	1			23	9				
11:15		22	7			26	10				
11:30		34	1			33	6				
11:45		22	8	101	17	26	2	108	27	209	44
Total		687	1649			820	1665			1507	3314
Percent		29.4%	70.6%			33.0%	67.0%			31.3%	68.7%

Accurate Counts
978-664-2565

Location : Union Street South of
Location : Garden Street
City/State: Milford, NH
Counter : 16217

517840V3
Site Code: 51784003

Start Time	26-May-0 Fri	SB Morning	SB Afternoon	Hour Totals Morning	Hour Totals Afternoon	NB Morning	NB Afternoon	Hour Totals Morning	Hour Totals Afternoon	Combined Totals Morning	Combined Totals Afternoon
12:00		6	68			4	38				
12:15		3	57			2	37				
12:30		1	34			3	41				
12:45		7	38	17	197	5	31	14	147	31	344
01:00		4	32			2	31				
01:15		5	38			0	35				
01:30		0	29			1	27				
01:45		0	39	9	138	1	39	4	132	13	270
02:00		1	43			1	30				
02:15		2	54			0	79				
02:30		0	50			0	47				
02:45		1	60	4	207	0	50	1	206	5	413
03:00		1	57			0	42				
03:15		0	45			1	50				
03:30		1	53			3	40				
03:45		1	45	3	200	1	42	5	174	8	374
04:00		0	43			2	38				
04:15		1	59			0	45				
04:30		1	36			5	46				
04:45		1	35	3	173	3	47	10	176	13	349
05:00		2	51			3	61				
05:15		2	46			4	42				
05:30		6	37			14	40				
05:45		9	35	19	169	15	36	36	179	55	348
06:00		6	27			10	23				
06:15		7	31			15	43				
06:30		9	24			34	38				
06:45		23	28	45	110	24	22	83	126	128	236
07:00		39	24			35	34				
07:15		55	28			45	34				
07:30		45	19			50	21				
07:45		23	21	162	92	33	26	163	115	325	207
08:00		34	25			47	19				
08:15		38	20			32	19				
08:30		38	15			55	14				
08:45		53	18	163	78	50	15	184	67	347	145
09:00		33	15			37	11				
09:15		27	15			35	11				
09:30		29	6			29	10				
09:45		29	12	118	48	30	9	131	41	249	89
10:00		29	14			30	12				
10:15		25	13			27	11				
10:30		17	8			24	7				
10:45		23	13	94	48	40	12	121	42	215	90
11:00		24	9			22	5				
11:15		49	9			42	11				
11:30		27	9			33	2				
11:45		56	5	156	32	42	7	139	25	295	57
Total		793	1492			891	1430			1684	2922
Percent		34.7%	65.3%			38.4%	61.6%			36.6%	63.4%

Accurate Counts
978-664-2565

Location : Union Street South of
Location : Garden Street
City/State: Milford, NH
Counter : 16217

517840V3
Site Code: 51784003

Start Time	27-May-0 Sat	SB Morning	SB Afternoon	Hour Totals Morning	Hour Totals Afternoon	NB Morning	NB Afternoon	Hour Totals Morning	Hour Totals Afternoon	Combined Totals Morning	Combined Totals Afternoon
12:00		6	40			8	33				
12:15		7	34			3	40				
12:30		4	28			2	39				
12:45		6	31	23	133	4	34	17	146	40	279
01:00		9	30			2	42				
01:15		3	30			2	32				
01:30		0	32			2	36				
01:45		1	30	13	122	1	29	7	139	20	261
02:00		1	40			3	33				
02:15		2	28			2	30				
02:30		2	29			1	28				
02:45		4	29	9	126	2	27	8	118	17	244
03:00		0	31			0	26				
03:15		2	33			2	35				
03:30		2	34			4	36				
03:45		1	31	5	129	1	33	7	130	12	259
04:00		2	30			1	33				
04:15		0	37			2	16				
04:30		0	31			5	22				
04:45		0	33	2	131	2	29	10	100	12	231
05:00		3	27			1	21				
05:15		2	17			1	22				
05:30		7	30			9	28				
05:45		6	26	18	100	1	19	12	90	30	190
06:00		2	22			10	22				
06:15		3	24			8	16				
06:30		3	19			10	20				
06:45		9	25	17	90	11	19	39	77	56	167
07:00		11	19			17	22				
07:15		6	24			15	25				
07:30		13	23			23	12				
07:45		10	21	40	87	28	22	83	81	123	168
08:00		20	22			33	21				
08:15		19	15			34	24				
08:30		24	16			32	17				
08:45		18	20	81	73	35	23	134	85	215	158
09:00		24	13			44	8				
09:15		23	13			28	12				
09:30		28	11			38	21				
09:45		28	16	103	53	41	12	151	53	254	106
10:00		49	16			42	7				
10:15		49	19			36	9				
10:30		60	10			43	11				
10:45		41	13	199	58	36	9	157	36	356	94
11:00		40	12			32	7				
11:15		60	11			40	6				
11:30		41	13			36	1				
11:45		54	9	195	45	42	4	150	18	345	63
Total		705	1147			775	1073			1480	2220
Percent		38.1%	61.9%			41.9%	58.1%			40.0%	60.0%

Accurate Counts
978-664-2565

Location : Union Street South of
Location : Garden Street
City/State: Milford, NH
Counter : 16217

517840V3
Site Code: 51784003

Start Time	28-May-0 Sun	SB Morning	SB Afternoon	Hour Totals Morning	Hour Totals Afternoon	NB Morning	NB Afternoon	Hour Totals Morning	Hour Totals Afternoon	Combined Totals Morning	Combined Totals Afternoon
12:00		6	35			10	22				
12:15		5	22			4	18				
12:30		11	24			2	21				
12:45		3	27	25	108	4	25	20	86	45	194
01:00		0	24			3	20				
01:15		4	26			3	19				
01:30		6	14			2	18				
01:45		8	22	18	86	7	25	15	82	33	168
02:00		3	24			2	19				
02:15		1	25			1	15				
02:30		0	17			0	26				
02:45		3	28	7	94	2	25	5	85	12	179
03:00		0	27			1	16				
03:15		1	20			2	24				
03:30		2	37			1	22				
03:45		1	23	4	107	0	18	4	80	8	187
04:00		0	24			0	13				
04:15		1	18			3	17				
04:30		0	26			2	18				
04:45		1	25	2	93	1	21	6	69	8	162
05:00		1	24			2	17				
05:15		0	25			1	20				
05:30		1	24			1	11				
05:45		2	22	4	95	5	12	9	60	13	155
06:00		1	15			7	17				
06:15		1	21			4	20				
06:30		2	24			7	30				
06:45		3	23	7	83	10	18	28	85	35	168
07:00		6	21			10	23				
07:15		7	34			14	16				
07:30		7	25			11	16				
07:45		10	16	30	96	18	17	53	72	83	168
08:00		10	14			16	13				
08:15		10	21			23	17				
08:30		7	19			18	14				
08:45		10	11	37	65	33	11	90	55	127	120
09:00		16	11			31	9				
09:15		23	8			28	5				
09:30		25	13			32	13				
09:45		17	5	81	37	42	5	133	32	214	69
10:00		14	4			33	7				
10:15		27	5			26	4				
10:30		27	3			23	3				
10:45		20	8	88	20	19	5	101	19	189	39
11:00		23	7			28	3				
11:15		18	8			29	6				
11:30		28	17			28	6				
11:45		38	10	107	42	29	5	114	20	221	62
Total		410	926			578	745			988	1671
Percent		30.7%	69.3%			43.7%	56.3%			37.2%	62.8%

Accurate Counts
978-664-2565

Location : Union Street South of
Location : Garden Street
City/State: Milford, NH
Counter : 16217

517840V3
Site Code: 51784003

Start Time	29-May-0 Mon	SB Morning	SB Afternoon	Hour Totals Morning	Hour Totals Afternoon	NB Morning	NB Afternoon	Hour Totals Morning	Hour Totals Afternoon	Combined Totals Morning	Combined Totals Afternoon
12:00		5	26			4	16				
12:15		4	20			10	20				
12:30		1	21			0	14				
12:45		3	21	13	88	6	17	20	67	33	155
01:00		11	15			2	23				
01:15		3	26			4	13				
01:30		3	27			2	26				
01:45		1	26	18	94	4	19	12	81	30	175
02:00		0	19			2	31				
02:15		3	22			0	19				
02:30		2	27			2	22				
02:45		2	24	7	92	4	16	8	88	15	180
03:00		9	19			8	29				
03:15		4	22			2	20				
03:30		2	21			2	28				
03:45		5	19	20	81	4	30	16	107	36	188
04:00		1	35			1	25				
04:15		3	17			4	22				
04:30		2	20			2	20				
04:45		3	24	9	96	2	18	9	85	18	181
05:00		3	17			0	15				
05:15		4	25			4	14				
05:30		3	24			1	24				
05:45		2	24	12	90	4	36	9	89	21	179
06:00		1	32			1	35				
06:15		0	18			6	18				
06:30		1	21			7	19				
06:45		5	32	7	103	4	17	18	89	25	192
07:00		4	27			5	15				
07:15		7	20			7	26				
07:30		9	25			11	19				
07:45		8	17	28	89	13	24	36	84	64	173
08:00		11	23			16	25				
08:15		12	16			14	15				
08:30		12	27			13	12				
08:45		16	11	51	77	12	8	55	60	106	137
09:00		21	15			14	8				
09:15		19	20			23	11				
09:30		20	19			33	12				
09:45		14	9	74	63	30	15	100	46	174	109
10:00		21	9			37	9				
10:15		26	9			30	8				
10:30		26	8			48	2				
10:45		34	6	107	32	37	4	152	23	259	55
11:00		40	8			53	6				
11:15		43	9			54	6				
11:30		67	5			39	5				
11:45		37	1	187	23	23	3	169	20	356	43
Total		533	928			604	839			1137	1767
Percent		36.5%	63.5%			41.9%	58.1%			39.2%	60.8%

Accurate Counts
978-664-2565

Location : Union Street South of
Location : Garden Street
City/State: Milford, NH
Counter : 16217

517840V3
Site Code: 51784003

Start	30-May-0	SB		Hour Totals		NB		Hour Totals		Combined Totals	
Time	Tue	Morning	Afternoon	Morning	Afternoon	Morning	Afternoon	Morning	Afternoon	Morning	Afternoon
12:00		4	38			1	34				
12:15		2	34			2	31				
12:30		4	34			5	36				
12:45		3	29	13	135	1	46	9	147	22	282
01:00		1	26			2	37				
01:15		0	24			0	33				
01:30		0	29			2	27				
01:45		3	31	4	110	1	23	5	120	9	230
02:00		0	43			2	20				
02:15		3	43			4	75				
02:30		1	60			0	51				
02:45		2	42	6	188	0	57	6	203	12	391
03:00		0	49			0	37				
03:15		0	56			1	45				
03:30		0	44			3	45				
03:45		1	29	1	178	2	54	6	181	7	359
04:00		0	52			1	49				
04:15		2	52			1	31				
04:30		2	42			2	50				
04:45		0	36	4	182	6	38	10	168	14	350
05:00		1	57			0	53				
05:15		0	48			4	61				
05:30		7	63			11	50				
05:45		7	49	15	217	14	41	29	205	44	422
06:00		8	61			19	56				
06:15		11	34			21	25				
06:30		14	33			19	30				
06:45		24	31	57	159	23	41	82	152	139	311
07:00		41	33			37	41				
07:15		65	35			42	39				
07:30		57	42			68	27				
07:45		27	39	190	149	40	25	187	132	377	281
08:00		23	28			38	28				
08:15		48	24			39	20				
08:30		44	22			48	17				
08:45		25	29	140	103	42	19	167	84	307	187
09:00		24	21			39	13				
09:15		30	16			27	7				
09:30		28	4			36	12				
09:45		25	16	107	57	34	12	136	44	243	101
10:00		35	9			25	6				
10:15		35	7			36	4				
10:30		38	6			33	5				
10:45		23	9	131	31	38	3	132	18	263	49
11:00		25	4			36	5				
11:15		28	3			29	4				
11:30		25	3			33	6				
11:45		37	2	115	12	26	6	124	21	239	33
Total		783	1521			893	1475			1676	2996
Percent		34.0%	66.0%			37.7%	62.3%			35.9%	64.1%

Accurate Counts
978-664-2565

Location : Union Street South of
Location : Garden Street
City/State: Milford, NH
Counter : 16217

517840V3
Site Code: 51784003

Start Time	31-May-0 Wed	SB Morning	SB Afternoon	Hour Totals Morning	Hour Totals Afternoon	NB Morning	NB Afternoon	Hour Totals Morning	Hour Totals Afternoon	Combined Totals Morning	Combined Totals Afternoon
12:00		4	28			3	33				
12:15		1	34			2	32				
12:30		3	27			1	38				
12:45		2	35	10	124	2	34	8	137	18	261
01:00		0	42			1	29				
01:15		2	44			1	30				
01:30		2	29			4	30				
01:45		1	43	5	158	1	33	7	122	12	280
02:00		0	42			0	21				
02:15		0	49			1	54				
02:30		0	74			2	66				
02:45		1	69	1	234	0	30	3	171	4	405
03:00		0	46			1	40				
03:15		0	70			2	35				
03:30		0	73			0	54				
03:45		0	81	0	270	2	51	5	180	5	450
04:00		2	44			2	41				
04:15		0	48			0	59				
04:30		1	54			3	51				
04:45		1	46	4	192	1	49	6	200	10	392
05:00		2	37			6	41				
05:15		2	46			5	51				
05:30		8	60			9	66				
05:45		7	69	19	212	14	48	34	206	53	418
06:00		7	45			17	54				
06:15		7	44			21	36				
06:30		15	42			31	27				
06:45		20	46	49	177	35	46	104	163	153	340
07:00		38	47			44	30				
07:15		61	35			43	24				
07:30		70	39			69	29				
07:45		32	37	201	158	41	21	197	104	398	262
08:00		42	39			42	44				
08:15		43	27			34	25				
08:30		38	25			43	22				
08:45		28	26	151	117	47	20	166	111	317	228
09:00		40	32			32	21				
09:15		30	23			29	21				
09:30		25	22			33	17				
09:45		28	19	123	96	26	11	120	70	243	166
10:00		23	15			25	11				
10:15		22	8			28	3				
10:30		21	8			23	5				
10:45		29	4	95	35	28	4	104	23	199	58
11:00		24	3			38	1				
11:15		21	4			32	4				
11:30		24	5			30	9				
11:45		34	7	103	19	28	5	128	19	231	38
Total		761	1792			882	1506			1643	3298
Percent		29.8%	70.2%			36.9%	63.1%			33.3%	66.7%

Accurate Counts
978-664-2565

Location : Union Street South of
Location : Garden Street
City/State: Milford, NH
Counter : 16217

517840V3
Site Code: 51784003

Start	01-Jun-06	SB		Hour Totals		NB		Hour Totals		Combined Totals	
Time	Thu	Morning	Afternoon	Morning	Afternoon	Morning	Afternoon	Morning	Afternoon	Morning	Afternoon
12:00		1	33			1	44				
12:15		2	34			4	42				
12:30		1	33			1	33				
12:45		4	23	8	123	0	38	6	157	14	280
01:00		6	36			1	49				
01:15		1	41			2	37				
01:30		4	33			1	36				
01:45		0	30	11	140	0	33	4	155	15	295
02:00		0	38			1	32				
02:15		0	46			2	74				
02:30		0	64			1	56				
02:45		3	60	3	208	1	54	5	216	8	424
03:00		0	43			0	49				
03:15		0	33			0	43				
03:30		0	38			3	49				
03:45		0	47	0	161	3	46	6	187	6	348
04:00		1	48			0	48				
04:15		1	43			1	56				
04:30		2	29			3	58				
04:45		3	60	7	180	3	54	7	216	14	396
05:00		0	50			2	31				
05:15		2	62			6	70				
05:30		6	42			12	55				
05:45		9	52	17	206	24	51	44	207	61	413
06:00		5	37			18	41				
06:15		3	62			17	39				
06:30		19	53			20	59				
06:45		34	61	61	213	26	62	81	201	142	414
07:00		37	83			40	39				
07:15		57	30			46	42				
07:30		62	40			55	24				
07:45		32	37	188	190	50	22	191	127	379	317
08:00		38	40			38	30				
08:15		48	47			47	37				
08:30		34	35			48	45				
08:45		32	44	152	166	38	22	171	134	323	300
09:00		28	27			34	30				
09:15		25	16			34	15				
09:30		32	14			30	14				
09:45		30	19	115	76	21	18	119	77	234	153
10:00		21	11			24	6				
10:15		19	9			22	14				
10:30		30	9			33	7				
10:45		30	9	100	38	27	7	106	34	206	72
11:00		26	10			22	2				
11:15		23	6			32	2				
11:30		27	6			24	5				
11:45		29	3	105	25	27	4	105	13	210	38
Total		767	1726			845	1724			1612	3450
Percent		30.8%	69.2%			32.9%	67.1%			31.8%	68.2%

Accurate Counts
978-664-2565

Location : Union Street South of
Location : Garden Street
City/State: Milford, NH
Counter : 16217

517840V3
Site Code: 51784003

Start	02-Jun-06	SB		Hour Totals		NB		Hour Totals		Combined Totals	
Time	Fri	Morning	Afternoon	Morning	Afternoon	Morning	Afternoon	Morning	Afternoon	Morning	Afternoon
12:00		12	64			1	0				
12:15		4	83			3	0				
12:30		2	67			2	0				
12:45		2	60	20	274	3	0	9	0	29	274
01:00		0	47			2	0				
01:15		2	70			3	0				
01:30		3	61			0	0				
01:45		0	60	5	238	1	0	6	0	11	238
02:00		3	76			2	0				
02:15		1	105			0	0				
02:30		0	100			1	0				
02:45		1	83	5	364	1	0	4	0	9	364
03:00		0	68			1	0				
03:15		0	92			0	0				
03:30		0	98			4	0				
03:45		2	87	2	345	3	0	8	0	10	345
04:00		0	94			0	0				
04:15		0	89			0	0				
04:30		1	85			4	0				
04:45		2	76	3	344	5	0	9	0	12	344
05:00		0	89			1	0				
05:15		2	81			3	0				
05:30		5	80			10	0				
05:45		4	73	11	323	11	0	25	0	36	323
06:00		9	64			17	0				
06:15		7	66			20	0				
06:30		14	62			24	0				
06:45		17	47	47	239	21	0	82	0	129	239
07:00		30	63			44	0				
07:15		60	36			53	0				
07:30		62	46			66	0				
07:45		27	31	179	176	36	0	199	0	378	176
08:00		32	34			48	0				
08:15		57	35			44	0				
08:30		37	33			55	0				
08:45		32	30	158	132	52	0	199	0	357	132
09:00		71	19			2	0				
09:15		55	24			0	0				
09:30		65	20			0	0				
09:45		56	25	247	88	0	0	2	0	249	88
10:00		41	26			0	0				
10:15		54	20			0	0				
10:30		46	14			0	0				
10:45		54	12	195	72	0	0	0	0	195	72
11:00		60	24			0	0				
11:15		70	25			0	0				
11:30		60	18			0	0				
11:45		63	18	253	85	0	0	0	0	253	85
Total		1125	2680			543	0			1668	2680
Percent		29.6%	70.4%			100.0%	0.0%			38.4%	61.6%

Accurate Counts
978-664-2565

Location : Union Street South of
Location : Garden Street
City/State: Milford, NH
Counter : 16217

517840V3
Site Code: 51784003

Start Time	03-Jun-06 Sat	SB Morning	SB Afternoon	Hour Totals Morning	Hour Totals Afternoon	NB Morning	NB Afternoon	Hour Totals Morning	Hour Totals Afternoon	Combined Totals Morning	Combined Totals Afternoon
12:00		12	76			0	0				
12:15		10	89			0	0				
12:30		2	65			0	0				
12:45		8	67	32	297	0	0	0	0	32	297
01:00		7	61			0	0				
01:15		2	59			0	0				
01:30		10	66			0	0				
01:45		7	53	26	239	0	0	0	0	26	239
02:00		6	37			0	0				
02:15		6	46			0	0				
02:30		2	41			0	0				
02:45		4	39	18	163	0	0	0	0	18	163
03:00		1	54			0	0				
03:15		4	60			0	0				
03:30		5	61			0	0				
03:45		2	56	12	231	0	0	0	0	12	231
04:00		1	44			0	0				
04:15		1	38			0	0				
04:30		2	40			0	0				
04:45		4	43	8	165	0	0	0	0	8	165
05:00		7	53			0	0				
05:15		2	40			0	0				
05:30		8	45			0	0				
05:45		8	34	25	172	0	0	0	0	25	172
06:00		10	39			0	0				
06:15		7	38			0	0				
06:30		11	41			0	0				
06:45		14	49	42	167	0	0	0	0	42	167
07:00		19	35			0	0				
07:15		19	34			0	0				
07:30		27	28			0	0				
07:45		40	26	105	123	0	0	0	0	105	123
08:00		34	28			0	0				
08:15		43	27			0	0				
08:30		37	38			0	0				
08:45		39	24	153	117	0	0	0	0	153	117
09:00		54	29			0	0				
09:15		49	32			0	0				
09:30		70	24			0	0				
09:45		69	24	242	109	0	0	0	0	242	109
10:00		76	22			0	0				
10:15		67	18			0	0				
10:30		83	19			0	0				
10:45		67	17	293	76	0	0	0	0	293	76
11:00		82	8			0	0				
11:15		81	11			0	0				
11:30		78	8			0	0				
11:45		73	13	314	40	0	0	0	0	314	40
Total		1270	1899			0	0			1270	1899
Percent		40.1%	59.9%			0.0%	0.0%			40.1%	59.9%

Accurate Counts
978-664-2565

Location : Union Street South of
Location : Garden Street
City/State: Milford, NH
Counter : 16217

517840V3
Site Code: 51784003

Start Time	04-Jun-06 Sun	SB Morning	SB Afternoon	Hour Totals Morning	Hour Totals Afternoon	NB Morning	NB Afternoon	Hour Totals Morning	Hour Totals Afternoon	Combined Totals Morning	Combined Totals Afternoon
12:00		7	49			0	0				
12:15		10	65			0	0				
12:30		12	65			0	0				
12:45		8	59	37	238	0	0	0	0	37	238
01:00		8	56			0	0				
01:15		2	38			0	0				
01:30		4	78			0	0				
01:45		5	67	19	239	0	0	0	0	19	239
02:00		4	64			0	0				
02:15		1	54			0	0				
02:30		7	41			0	0				
02:45		2	37	14	196	0	0	0	0	14	196
03:00		2	60			0	0				
03:15		2	43			0	0				
03:30		0	56			0	0				
03:45		2	40	6	199	0	0	0	0	6	199
04:00		1	46			0	0				
04:15		0	44			0	0				
04:30		2	47			0	0				
04:45		2	54	5	191	0	0	0	0	5	191
05:00		6	49			0	0				
05:15		2	53			0	0				
05:30		2	46			0	0				
05:45		6	40	16	188	0	0	0	0	16	188
06:00		4	40			0	0				
06:15		6	31			0	0				
06:30		12	47			0	0				
06:45		19	38	41	156	0	0	0	0	41	156
07:00		13	35			0	0				
07:15		14	34			0	0				
07:30		19	40			0	0				
07:45		24	46	70	155	0	0	0	0	70	155
08:00		19	34			0	0				
08:15		31	43			0	0				
08:30		30	20			0	0				
08:45		39	26	119	123	0	0	0	0	119	123
09:00		46	24			0	0				
09:15		43	25			0	0				
09:30		41	21			0	0				
09:45		53	13	183	83	0	0	0	0	183	83
10:00		45	17			0	0				
10:15		55	14			0	0				
10:30		34	12			0	0				
10:45		47	4	181	47	0	0	0	0	181	47
11:00		49	11			0	0				
11:15		35	10			0	0				
11:30		55	8			0	0				
11:45		40	6	179	35	0	0	0	0	179	35
Total		870	1850			0	0			870	1850
Percent		32.0%	68.0%			0.0%	0.0%			32.0%	68.0%

Accurate Counts
978-664-2565

Location : Union Street South of
Location : Garden Street
City/State: Milford, NH
Counter : 16217

517840V3
Site Code: 51784003

Start Time	05-Jun-06 Mon	SB Morning	SB Afternoon	Hour Totals Morning	Hour Totals Afternoon	NB Morning	NB Afternoon	Hour Totals Morning	Hour Totals Afternoon	Combined Totals Morning	Combined Totals Afternoon
12:00		5	*			0	*				
12:15		8	*			0	*				
12:30		5	*			0	*				
12:45		2	*	20	0	0	*	0	0	20	0
01:00		4	*			0	*				
01:15		1	*			0	*				
01:30		2	*			0	*				
01:45		0	*	7	0	0	*	0	0	7	0
02:00		1	*			0	*				
02:15		1	*			0	*				
02:30		1	*			0	*				
02:45		0	*	3	0	0	*	0	0	3	0
03:00		1	*			0	*				
03:15		2	*			0	*				
03:30		4	*			0	*				
03:45		4	*	11	0	0	*	0	0	11	0
04:00		2	*			0	*				
04:15		0	*			0	*				
04:30		2	*			0	*				
04:45		7	*	11	0	0	*	0	0	11	0
05:00		2	*			0	*				
05:15		6	*			0	*				
05:30		13	*			0	*				
05:45		18	*	39	0	0	*	0	0	39	0
06:00		*	*	*	*	*	*	*	*	*	*
06:15		*	*	*	*	*	*	*	*	*	*
06:30		*	*	*	*	*	*	*	*	*	*
06:45		*	*	*	*	*	*	*	*	*	*
07:00		*	*	*	*	*	*	*	*	*	*
07:15		*	*	*	*	*	*	*	*	*	*
07:30		*	*	*	*	*	*	*	*	*	*
07:45		*	*	*	*	*	*	*	*	*	*
08:00		*	*	*	*	*	*	*	*	*	*
08:15		*	*	*	*	*	*	*	*	*	*
08:30		*	*	*	*	*	*	*	*	*	*
08:45		*	*	*	*	*	*	*	*	*	*
09:00		*	*	*	*	*	*	*	*	*	*
09:15		*	*	*	*	*	*	*	*	*	*
09:30		*	*	*	*	*	*	*	*	*	*
09:45		*	*	*	*	*	*	*	*	*	*
10:00		*	*	*	*	*	*	*	*	*	*
10:15		*	*	*	*	*	*	*	*	*	*
10:30		*	*	*	*	*	*	*	*	*	*
10:45		*	*	*	*	*	*	*	*	*	*
11:00		*	*	*	*	*	*	*	*	*	*
11:15		*	*	*	*	*	*	*	*	*	*
11:30		*	*	*	*	*	*	*	*	*	*
11:45		*	*	*	*	*	*	*	*	*	*
Total		91	0			0	0			91	0
Percent		100.0%	0.0%			0.0%	0.0%			100.0%	0.0%
Grand Total		13230	27367			12023	20014			25253	47381
Percent		32.6%	67.4%			37.5%	62.5%			34.8%	65.2%

ADT Not Calculated

Accurate Counts
978-664-2565

Location : Union Street South of
Location : Garden Street
City/State: Milford, NH
Counter : 2567

51784AV3
Site Code: 51784003

Start	05-Jun-06	SB		Hour Totals		NB		Hour Totals		Combined Totals	
Time	Mon	Morning	Afternoon	Morning	Afternoon	Morning	Afternoon	Morning	Afternoon	Morning	Afternoon
12:00		*	36			*	35				
12:15		*	28			*	32				
12:30		*	23			*	33				
12:45		*	30	0	117	*	39	0	139	0	256
01:00		*	26			*	32				
01:15		*	33			*	35				
01:30		*	31			*	34				
01:45		*	29	0	119	*	31	0	132	0	251
02:00		*	49			*	36				
02:15		*	49			*	79				
02:30		*	52			*	48				
02:45		*	47	0	197	*	40	0	203	0	400
03:00		*	50			*	36				
03:15		*	36			*	40				
03:30		*	76			*	34				
03:45		*	60	0	222	*	46	0	156	0	378
04:00		*	42			*	47				
04:15		*	39			*	44				
04:30		*	43			*	46				
04:45		*	45	0	169	*	40	0	177	0	346
05:00		*	36			*	48				
05:15		*	60			*	61				
05:30		*	53			*	50				
05:45		*	45	0	194	*	49	0	208	0	402
06:00		*	38			*	49				
06:15		7	36			23	28				
06:30		23	26			33	32				
06:45		20	28	50	128	29	42	85	151	135	279
07:00		39	34			43	34				
07:15		71	28			56	32				
07:30		62	20			56	35				
07:45		23	26	195	108	40	18	195	119	390	227
08:00		26	35			24	27				
08:15		48	35			52	19				
08:30		32	28			45	18				
08:45		30	24	136	122	40	12	161	76	297	198
09:00		20	18			39	14				
09:15		22	15			26	7				
09:30		13	10			36	7				
09:45		21	17	76	60	33	7	134	35	210	95
10:00		17	12			28	8				
10:15		26	5			28	4				
10:30		21	9			27	3				
10:45		23	1	87	27	20	5	103	20	190	47
11:00		34	2			35	4				
11:15		27	5			33	2				
11:30		28	2			27	4				
11:45		21	5	110	14	30	3	125	13	235	27
Total		654	1477			803	1429			1457	2906
Percent		30.7%	69.3%			36.0%	64.0%			33.4%	66.6%

Accurate Counts
978-664-2565

Location : Union Street South of
Location : Garden Street
City/State: Milford, NH
Counter : 2567

51784AV3
Site Code: 51784003

Start Time	06-Jun-06 Tue	SB Morning	SB Afternoon	Hour Totals Morning	Hour Totals Afternoon	NB Morning	NB Afternoon	Hour Totals Morning	Hour Totals Afternoon	Combined Totals Morning	Combined Totals Afternoon
12:00		2	25			3	32				
12:15		2	35			6	30				
12:30		3	30			1	38				
12:45		1	27	8	117	0	34	10	134	18	251
01:00		3	29			0	26				
01:15		2	27			1	30				
01:30		1	36			1	33				
01:45		1	29	7	121	0	33	2	122	9	243
02:00		2	31			2	37				
02:15		1	52			0	59				
02:30		0	60			0	41				
02:45		0	48	3	191	1	40	3	177	6	368
03:00		0	42			0	52				
03:15		1	56			0	45				
03:30		0	40			4	43				
03:45		1	46	2	184	1	57	5	197	7	381
04:00		1	55			0	41				
04:15		2	59			0	51				
04:30		0	52			4	39				
04:45		3	46	6	212	5	69	9	200	15	412
05:00		0	53			1	50				
05:15		5	34			4	62				
05:30		6	54			13	42				
05:45		4	37	15	178	15	49	33	203	48	381
06:00		8	43			17	42				
06:15		9	39			29	45				
06:30		10	40			27	49				
06:45		28	43	55	165	32	51	105	187	160	352
07:00		29	22			39	30				
07:15		65	36			41	24				
07:30		37	41			45	26				
07:45		27	28	158	127	41	20	166	100	324	227
08:00		32	30			43	20				
08:15		51	20			41	18				
08:30		26	30			32	11				
08:45		20	22	129	102	57	13	173	62	302	164
09:00		20	18			24	9				
09:15		31	18			40	10				
09:30		26	19			30	8				
09:45		29	10	106	65	44	12	138	39	244	104
10:00		19	14			16	14				
10:15		22	9			27	8				
10:30		21	9			30	4				
10:45		35	7	97	39	32	1	105	27	202	66
11:00		25	6			34	4				
11:15		25	6			34	3				
11:30		29	5			20	5				
11:45		39	7	118	24	20	4	108	16	226	40
Total		704	1525			857	1464			1561	2989
Percent		31.6%	68.4%			36.9%	63.1%			34.3%	65.7%

Accurate Counts
978-664-2565

Location : Union Street South of
Location : Garden Street
City/State: Milford, NH
Counter : 2567

51784AV3
Site Code: 51784003

Start	07-Jun-06	SB		Hour Totals		NB		Hour Totals		Combined Totals	
Time	Wed	Morning	Afternoon	Morning	Afternoon	Morning	Afternoon	Morning	Afternoon	Morning	Afternoon
12:00		5	29			2	27				
12:15		1	25			2	38				
12:30		2	24			2	29				
12:45		3	21	11	99	2	28	8	122	19	221
01:00		0	31			1	24				
01:15		1	21			1	27				
01:30		0	29			1	25				
01:45		2	26	3	107	0	24	3	100	6	207
02:00		0	36			1	29				
02:15		1	58			0	69				
02:30		0	47			0	45				
02:45		1	52	2	193	0	49	1	192	3	385
03:00		0	33			0	52				
03:15		0	32			0	32				
03:30		0	49			4	33				
03:45		1	41	1	155	1	51	5	168	6	323
04:00		1	72			1	41				
04:15		1	35			1	49				
04:30		2	39			3	46				
04:45		2	32	6	178	3	26	8	162	14	340
05:00		0	39			3	30				
05:15		2	23			6	44				
05:30		5	39			11	30				
05:45		5	35	12	136	12	25	32	129	44	265
06:00		10	31			11	25				
06:15		8	30			27	31				
06:30		15	25			29	26				
06:45		27	26	60	112	23	28	90	110	150	222
07:00		39	34			28	24				
07:15		71	30			56	16				
07:30		67	27			48	28				
07:45		27	14	204	105	37	16	169	84	373	189
08:00		28	22			43	13				
08:15		49	17			38	11				
08:30		28	22			41	14				
08:45		34	20	139	81	46	11	168	49	307	130
09:00		21	14			34	16				
09:15		20	13			37	8				
09:30		14	23			20	7				
09:45		32	14	87	64	27	7	118	38	205	102
10:00		25	3			22	3				
10:15		28	9			25	2				
10:30		23	6			17	4				
10:45		26	5	102	23	33	5	97	14	199	37
11:00		25	6			38	3				
11:15		31	4			28	2				
11:30		33	5			23	2				
11:45		27	3	116	18	27	1	116	8	232	26
Total		743	1271			815	1176			1558	2447
Percent		36.9%	63.1%			40.9%	59.1%			38.9%	61.1%

Accurate Counts
978-664-2565

Location : Union Street South of
Location : Garden Street
City/State: Milford, NH
Counter : 2567

51784AV3
Site Code: 51784003

Start	08-Jun-06	SB		Hour Totals		NB		Hour Totals		Combined Totals	
Time	Thu	Morning	Afternoon	Morning	Afternoon	Morning	Afternoon	Morning	Afternoon	Morning	Afternoon
12:00		7	18			3	27				
12:15		2	33			4	28				
12:30		0	24			2	30				
12:45		3	49	12	124	0	36	9	121	21	245
01:00		1	25			1	43				
01:15		2	25			2	32				
01:30		0	30			1	34				
01:45		0	34	3	114	0	39	4	148	7	262
02:00		0	50			0	23				
02:15		1	40			1	76				
02:30		0	48			0	49				
02:45		0	50	1	188	2	48	3	196	4	384
03:00		2	59			0	38				
03:15		0	36			3	29				
03:30		2	49			4	45				
03:45		1	45	5	189	0	50	7	162	12	351
04:00		2	43			1	40				
04:15		0	48			2	42				
04:30		3	40			3	47				
04:45		1	53	6	184	3	49	9	178	15	362
05:00		1	47			2	57				
05:15		4	40			6	47				
05:30		3	34			14	39				
05:45		9	36	17	157	13	26	35	169	52	326
06:00		1	35			18	43				
06:15		9	44			20	30				
06:30		17	36			22	35				
06:45		33	31	60	146	26	28	86	136	146	282
07:00		25	31			36	30				
07:15		73	22			43	29				
07:30		44	32			50	32				
07:45		22	25	164	110	37	28	166	119	330	229
08:00		28	23			28	32				
08:15		49	18			37	15				
08:30		31	29			39	18				
08:45		15	16	123	86	44	12	148	77	271	163
09:00		23	17			20	12				
09:15		23	14			23	13				
09:30		20	15			28	14				
09:45		20	5	86	51	25	15	96	54	182	105
10:00		31	13			27	12				
10:15		17	6			28	12				
10:30		24	3			17	4				
10:45		28	4	100	26	27	3	99	31	199	57
11:00		27	8			32	4				
11:15		24	2			25	0				
11:30		27	6			28	9				
11:45		19	4	97	20	30	4	115	17	212	37
Total		674	1395			777	1408			1451	2803
Percent		32.6%	67.4%			35.6%	64.4%			34.1%	65.9%

Accurate Counts
978-664-2565

Location : Union Street South of
Location : Garden Street
City/State: Milford, NH
Counter : 2567

51784AV3
Site Code: 51784003

Start	09-Jun-06	SB		Hour Totals		NB		Hour Totals		Combined Totals	
Time	Fri	Morning	Afternoon	Morning	Afternoon	Morning	Afternoon	Morning	Afternoon	Morning	Afternoon
12:00		3	37			2	41				
12:15		3	32			3	35				
12:30		1	31			2	28				
12:45		4	24	11	124	2	30	9	134	20	258
01:00		4	29			2	30				
01:15		0	36			3	29				
01:30		1	35			2	31				
01:45		1	37	6	137	1	28	8	118	14	255
02:00		1	40			0	35				
02:15		1	66			0	63				
02:30		0	58			0	49				
02:45		0	45	2	209	1	49	1	196	3	405
03:00		1	57			0	51				
03:15		0	55			0	44				
03:30		0	73			5	42				
03:45		2	56	3	241	1	50	6	187	9	428
04:00		1	49			0	44				
04:15		0	48			1	46				
04:30		5	60			3	52				
04:45		0	54	6	211	2	50	6	192	12	403
05:00		1	55			5	50				
05:15		3	51			8	58				
05:30		4	45			10	57				
05:45		12	42	20	193	13	50	36	215	56	408
06:00		5	48			17	36				
06:15		8	31			28	51				
06:30		15	34			23	28				
06:45		31	38	59	151	25	37	93	152	152	303
07:00		44	34			46	36				
07:15		62	28			51	28				
07:30		38	26			54	34				
07:45		23	23	167	111	34	20	185	118	352	229
08:00		30	34			41	20				
08:15		49	27			40	18				
08:30		18	17			49	17				
08:45		28	19	125	97	34	10	164	65	289	162
09:00		15	19			29	15				
09:15		19	15			27	16				
09:30		24	20			22	18				
09:45		21	8	79	62	24	18	102	67	181	129
10:00		23	10			16	12				
10:15		19	12			38	9				
10:30		24	12			39	6				
10:45		28	12	94	46	32	8	125	35	219	81
11:00		25	7			40	5				
11:15		25	9			37	6				
11:30		33	3			25	7				
11:45		40	10	123	29	32	4	134	22	257	51
Total		695	1611			869	1501			1564	3112
Percent		30.1%	69.9%			36.7%	63.3%			33.4%	66.6%

Accurate Counts
978-664-2565

Location : Union Street South of
Location : Garden Street
City/State: Milford, NH
Counter : 2567

51784AV3
Site Code: 51784003

Start	10-Jun-06	SB		Hour Totals		NB		Hour Totals		Combined Totals	
Time	Sat	Morning	Afternoon	Morning	Afternoon	Morning	Afternoon	Morning	Afternoon	Morning	Afternoon
12:00		3	47			7	45				
12:15		6	44			7	37				
12:30		4	34			2	35				
12:45		5	34	18	159	0	42	16	159	34	318
01:00		6	29			1	45				
01:15		8	*			2	*				
01:30		1	*			2	*				
01:45		0	*	15	29	2	*	7	45	22	74
02:00		1	*			1	*				
02:15		1	*			2	*				
02:30		2	*			1	*				
02:45		1	*	5	0	2	*	6	0	11	0
03:00		2	*			0	*				
03:15		1	*			2	*				
03:30		0	*			2	*				
03:45		0	*	3	0	0	*	4	0	7	0
04:00		1	*			1	*				
04:15		2	*			1	*				
04:30		2	*			2	*				
04:45		1	*	6	0	1	*	5	0	11	0
05:00		2	*			1	*				
05:15		0	*			2	*				
05:30		4	*			6	*				
05:45		2	*	8	0	7	*	16	0	24	0
06:00		2	*			6	*				
06:15		2	*			7	*				
06:30		3	*			16	*				
06:45		6	*	13	0	16	*	45	0	58	0
07:00		5	*			12	*				
07:15		9	*			19	*				
07:30		12	*			26	*				
07:45		10	*	36	0	23	*	80	0	116	0
08:00		13	*			25	*				
08:15		19	*			20	*				
08:30		13	*			21	*				
08:45		7	*	52	0	39	*	105	0	157	0
09:00		26	*			26	*				
09:15		27	*			42	*				
09:30		23	*			35	*				
09:45		32	*	108	0	34	*	137	0	245	0
10:00		28	*			31	*				
10:15		28	*			33	*				
10:30		29	*			40	*				
10:45		49	*	134	0	40	*	144	0	278	0
11:00		56	*			41	*				
11:15		30	*			45	*				
11:30		50	*			48	*				
11:45		57	*	193	0	40	*	174	0	367	0
Total		591	188			739	204			1330	392
Percent		75.9%	24.1%			78.4%	21.6%			77.2%	22.8%
Grand Total		4061	7467			4860	7182			8921	14649
Percent		35.2%	64.8%			40.4%	59.6%			37.8%	62.2%

ADT Not Calculated

Accurate Counts
978-664-2565

Location : Union Street South of
Location : Garden Street
City/State: Milford, NH
Counter : 9574

51784003
Site Code: 51784003

Start Time	01-May-06 SB	01-May-06 NB	Tue SB	Tue NB	Wed SB	Wed NB	Thu SB	Thu NB	Fri SB	Fri NB	Sat SB	Sat NB	Sun SB	Sun NB	Week Average SB	Week Average NB
12:00 AM	*	*	*	*	*	*	*	*	*	*	22	21	21	28	22	24
01:00	*	*	*	*	*	*	*	*	*	*	15	13	18	13	16	13
02:00	*	*	*	*	*	*	*	*	*	*	3	2	9	7	6	4
03:00	*	*	*	*	*	*	*	*	*	*	5	10	7	6	6	8
04:00	*	*	*	*	*	*	*	*	*	*	7	6	5	5	6	6
05:00	*	*	*	*	*	*	*	*	*	*	9	17	7	14	8	16
06:00	*	*	*	*	*	*	*	*	*	*	25	39	11	32	18	36
07:00	*	*	*	*	*	*	*	*	*	*	55	90	36	64	46	77
08:00	*	*	*	*	*	*	*	*	*	*	103	170	42	113	72	142
09:00	*	*	*	*	*	*	*	*	*	*	125	168	79	**137**	102	152
10:00	*	*	*	*	*	*	*	*	*	*	234	174	83	136	158	155
11:00	*	*	*	*	*	*	*	*	*	*	**286**	**207**	**118**	126	**202**	**166**
12:00 PM	*	*	*	*	*	*	*	*	*	*	166	173	**167**	129	**166**	151
01:00	*	*	*	*	*	*	*	*	*	*	**175**	**174**	136	**144**	156	**159**
02:00	*	*	*	*	*	*	*	*	*	*	138	147	117	101	128	124
03:00	*	*	*	*	*	*	*	*	*	*	143	162	95	124	119	143
04:00	*	*	*	*	*	*	*	*	*	*	137	143	114	100	126	122
05:00	*	*	*	*	*	*	*	*	*	*	161	156	107	99	134	128
06:00	*	*	*	*	*	*	*	*	*	*	97	112	99	82	98	97
07:00	*	*	*	*	*	*	*	*	*	*	81	83	80	74	80	78
08:00	*	*	*	*	*	*	*	*	*	*	62	58	73	53	68	56
09:00	*	*	*	*	*	*	*	*	*	*	75	54	28	35	52	44
10:00	*	*	*	*	*	*	*	*	*	*	46	30	27	13	36	22
11:00	*	*	*	*	*	*	*	*	*	*	25	20	7	11	16	16
Lane	0	0	0	0	0	0	0	0	0	0	2195	2229	1486	1646	1841	1939
Day	0		0		0		0		0		4424		3132		3780	
AM Peak											11:00	11:00	11:00	09:00	11:00	11:00
Vol.											286	207	118	137	202	166
PM Peak											13:00	13:00	12:00	13:00	12:00	13:00
Vol.											175	174	167	144	166	159

Accurate Counts
978-664-2565

Location : Union Street South of
Location : Garden Street
City/State: Milford, NH
Counter : 9574

51784003
Site Code: 51784003

Start	08-May-06		Tue		Wed		Thu		Fri		Sat		Sun		Week Average	
Time	SB	NB	SB	NB	SB	NB	SB	NB	SB	NB	SB	NB	SB	NB	SB	NB
12:00 AM	3	5	9	4	10	3	12	7	9	9	13	17	21	20	11	9
01:00	9	2	4	1	3	3	2	3	2	4	10	9	17	15	7	5
02:00	3	2	1	2	3	4	1	5	6	3	7	3	4	5	4	3
03:00	1	7	2	4	5	8	4	6	2	6	2	3	2	3	3	5
04:00	4	7	4	9	8	11	3	6	3	11	5	8	6	3	5	8
05:00	18	34	23	31	18	31	20	30	22	37	9	11	4	8	16	26
06:00	58	83	50	99	64	90	60	90	50	89	11	39	4	33	42	75
07:00	**210**	**179**	**201**	**195**	**209**	**201**	**185**	**176**	**199**	**194**	45	93	26	35	**154**	153
08:00	121	159	159	189	135	162	119	174	148	179	69	134	33	85	112	**155**
09:00	96	118	80	116	83	116	89	114	99	132	123	156	66	112	91	123
10:00	81	100	91	103	68	112	94	120	107	119	193	**175**	78	**128**	102	122
11:00	87	101	104	125	99	136	96	120	152	127	**207**	164	**115**	96	123	124
12:00 PM	111	127	109	137	118	121	119	136	177	132	**176**	**147**	**110**	92	131	127
01:00	107	127	130	116	112	117	107	109	117	129	155	117	98	**125**	118	120
02:00	160	**201**	181	**204**	**177**	**198**	**196**	**212**	**193**	**208**	121	128	77	93	**158**	**178**
03:00	153	170	176	174	177	171	151	162	180	182	92	117	81	100	144	154
04:00	**164**	161	189	164	164	176	163	171	159	194	99	107	105	96	149	153
05:00	144	169	**190**	174	145	177	188	198	160	188	111	94	105	89	149	156
06:00	97	102	132	127	126	100	154	160	138	153	65	78	87	88	114	115
07:00	126	130	112	114	85	92	139	135	91	97	70	76	101	87	103	104
08:00	87	56	79	60	84	69	104	84	74	81	57	66	84	49	81	66
09:00	63	36	56	33	64	33	69	36	63	57	56	40	32	45	58	40
10:00	29	21	25	13	28	17	33	24	39	34	32	39	34	23	31	24
11:00	10	11	15	15	15	17	17	15	46	30	35	29	15	18	22	19
Lane	1942	2108	2122	2209	2000	2165	2125	2293	2236	2395	1763	1850	1305	1448	1928	2064
Day	4050		4331		4165		4418		4631		3613		2753		3992	
AM Peak	07:00	07:00	07:00	07:00	07:00	07:00	07:00	07:00	07:00	07:00	11:00	10:00	11:00	10:00	07:00	08:00
Vol.	210	179	201	195	209	201	185	176	199	194	207	175	115	128	154	155
PM Peak	16:00	14:00	17:00	14:00	14:00	14:00	14:00	14:00	14:00	14:00	12:00	12:00	12:00	13:00	14:00	14:00
Vol.	164	201	190	204	177	198	196	212	193	208	176	147	110	125	158	178

Accurate Counts
978-664-2565

Location : Union Street South of
Location : Garden Street
City/State: Milford, NH
Counter : 9574

51784003
Site Code: 51784003

Start Time	15-May-06 SB	15-May-06 NB	Tue SB	Tue NB	Wed SB	Wed NB	Thu SB	Thu NB	Fri SB	Fri NB	Sat SB	Sat NB	Sun SB	Sun NB	Week Average SB	Week Average NB
12:00 AM	11	20	6	6	12	10	8	3	*	*	*	*	*	*	9	10
01:00	9	6	4	6	4	5	1	4	*	*	*	*	*	*	4	5
02:00	3	4	2	3	4	3	3	6	*	*	*	*	*	*	3	4
03:00	1	8	3	4	2	6	1	5	*	*	*	*	*	*	2	6
04:00	5	8	5	9	5	7	4	11	*	*	*	*	*	*	5	9
05:00	13	32	18	25	16	28	18	36	*	*	*	*	*	*	16	30
06:00	41	80	54	87	41	91	52	81	*	*	*	*	*	*	47	85
07:00	68	115	**227**	**181**	103	121	**193**	159	*	*	*	*	*	*	**148**	144
08:00	75	113	137	169	104	146	127	**168**	*	*	*	*	*	*	111	**149**
09:00	72	**120**	94	123	**180**	**172**	75	92	*	*	*	*	*	*	105	127
10:00	86	107	101	106	124	157	*	*	*	*	*	*	*	*	104	123
11:00	**87**	118	121	115	115	110	*	*	*	*	*	*	*	*	108	114
12:00 PM	107	137	126	126	134	136	*	*	*	*	*	*	*	*	122	133
01:00	118	124	131	121	150	154	*	*	*	*	*	*	*	*	133	133
02:00	101	129	**185**	186	172	188	*	*	*	*	*	*	*	*	153	168
03:00	136	140	166	**201**	170	185	*	*	*	*	*	*	*	*	157	175
04:00	**144**	**172**	154	154	187	182	*	*	*	*	*	*	*	*	162	169
05:00	137	151	184	182	**198**	**208**	*	*	*	*	*	*	*	*	**173**	**180**
06:00	101	107	129	139	134	117	*	*	*	*	*	*	*	*	121	121
07:00	93	62	98	95	138	99	*	*	*	*	*	*	*	*	110	85
08:00	53	60	88	52	103	86	*	*	*	*	*	*	*	*	81	66
09:00	50	38	73	41	44	43	*	*	*	*	*	*	*	*	56	41
10:00	28	16	37	21	32	17	*	*	*	*	*	*	*	*	32	18
11:00	22	23	16	12	18	15	*	*	*	*	*	*	*	*	19	17
Lane	1561	1890	2159	2164	2190	2286	482	565	0	0	0	0	0	0	1981	2112
Day	3451		4323		4476		1047		0		0		0		4093	
AM Peak	11:00	09:00	07:00	07:00	09:00	09:00	07:00	08:00							07:00	08:00
Vol.	87	120	227	181	180	172	193	168							148	149
PM Peak	16:00	16:00	14:00	15:00	17:00	17:00									17:00	17:00
Vol.	144	172	185	201	198	208									173	180
Comb. Total	7501		8654		8641		5465		4631		8037		5885		11865	

ADT Not Calculated

Accurate Counts
978-664-2565

Location : Union Street South of
Location : Garden Street
City/State: Milford, NH
Counter : 16217

517840V3
Site Code: 51784003

Start Time	15-May-06 SB	15-May-06 NB	Tue SB	Tue NB	Wed SB	Wed NB	Thu SB	Thu NB	Fri SB	Fri NB	Sat SB	Sat NB	Sun SB	Sun NB	Week Average SB	Week Average NB
12:00 AM	*	*	*	*	*	*	*	*	15	9	19	14	16	21	17	15
01:00	*	*	*	*	*	*	*	*	2	5	13	10	16	15	10	10
02:00	*	*	*	*	*	*	*	*	4	2	4	4	12	10	7	5
03:00	*	*	*	*	*	*	*	*	2	6	7	4	8	5	6	5
04:00	*	*	*	*	*	*	*	*	2	8	8	8	2	6	4	7
05:00	*	*	*	*	*	*	*	*	14	31	7	18	9	13	10	21
06:00	*	*	*	*	*	*	*	*	48	91	25	48	10	34	28	58
07:00	*	*	*	*	*	*	*	*	**178**	**159**	60	126	40	51	93	112
08:00	*	*	*	*	*	*	*	*	130	158	138	165	43	98	104	140
09:00	*	*	*	*	*	*	*	*	97	114	203	**212**	113	**144**	138	**157**
10:00	*	*	*	*	*	*	**96**	**100**	94	105	225	211	78	141	123	139
11:00	*	*	*	*	*	*	82	95	85	104	**307**	207	**134**	128	**152**	134
12:00 PM	*	*	*	*	*	*	125	127	139	135	**196**	172	122	119	146	138
01:00	*	*	*	*	*	*	125	119	125	129	177	**187**	**137**	**127**	141	140
02:00	*	*	*	*	*	*	168	205	191	**220**	146	153	119	89	**156**	**167**
03:00	*	*	*	*	*	*	172	160	142	152	147	148	128	116	147	144
04:00	*	*	*	*	*	*	179	188	**196**	173	124	136	93	78	148	144
05:00	*	*	*	*	*	*	**184**	**216**	156	202	115	108	114	117	142	161
06:00	*	*	*	*	*	*	139	145	157	152	113	115	92	96	125	127
07:00	*	*	*	*	*	*	151	137	116	105	91	71	64	67	106	95
08:00	*	*	*	*	*	*	125	94	81	71	66	62	75	57	87	71
09:00	*	*	*	*	*	*	62	41	72	55	62	50	59	41	64	47
10:00	*	*	*	*	*	*	41	35	59	64	46	42	23	19	42	40
11:00	*	*	*	*	*	*	25	16	33	31	34	25	12	16	26	22
Lane	0	0	0	0	0	0	1674	1678	2138	2281	2333	2296	1519	1608	2022	2099
Day	0		0		0		3352		4419		4629		3127		4121	
AM Peak							10:00	10:00	07:00	07:00	11:00	09:00	11:00	09:00	11:00	09:00
Vol.							96	100	178	159	307	212	134	144	152	157
PM Peak							17:00	17:00	16:00	14:00	12:00	13:00	13:00	13:00	14:00	14:00
Vol.							184	216	196	220	196	187	137	127	156	167

Accurate Counts
978-664-2565

Location : Union Street South of
Location : Garden Street
City/State: Milford, NH
Counter : 16217

517840X3
Site Code: 51784003

Start	22-May-06		Tue		Wed		Thu		Fri		Sat		Sun		Week Average	
Time	SB	NB	SB	NB	SB	NB	SB	NB	SB	NB	SB	NB	SB	NB	SB	NB
12:00 AM	5	5	11	6	9	7	11	8	17	14	23	17	25	20	14	11
01:00	12	11	2	3	4	6	2	3	9	4	13	7	18	15	9	7
02:00	5	2	1	2	2	0	1	4	4	1	9	8	7	5	4	3
03:00	4	7	1	5	1	5	3	7	3	5	5	7	4	4	3	6
04:00	4	10	3	11	3	9	5	11	3	10	2	10	2	6	3	10
05:00	14	33	15	27	17	33	20	33	19	36	18	12	4	9	15	26
06:00	54	83	54	93	61	89	62	86	45	83	17	39	7	28	43	72
07:00	**206**	**172**	**182**	175	**192**	**174**	**178**	**174**	162	163	40	83	30	53	**141**	142
08:00	115	161	126	**182**	121	169	128	162	**163**	**184**	81	134	37	90	110	**155**
09:00	80	105	109	139	93	106	99	130	118	131	103	151	81	**133**	98	128
10:00	76	106	102	116	93	108	77	94	94	121	**199**	**157**	88	101	104	115
11:00	86	130	100	106	126	116	101	108	156	139	195	150	**107**	114	124	123
12:00 PM	119	140	136	123	110	115	134	123	197	147	**133**	**146**	**108**	**86**	134	126
01:00	108	115	125	144	111	130	133	111	138	132	122	139	86	82	118	122
02:00	167	158	234	204	172	188	182	191	**207**	**206**	126	118	94	85	**169**	164
03:00	185	175	146	215	168	188	197	169	200	174	129	130	107	80	162	162
04:00	**206**	188	213	202	153	184	**217**	236	173	176	131	100	93	69	169	165
05:00	153	**193**	**245**	**216**	**194**	**194**	187	**298**	169	179	100	90	95	60	163	**176**
06:00	125	160	153	173	149	131	174	165	110	126	90	77	83	85	126	131
07:00	119	108	128	123	147	125	135	163	92	115	87	81	96	72	115	112
08:00	107	58	102	110	117	90	153	94	78	67	73	85	65	55	99	80
09:00	66	39	64	25	60	40	82	61	48	41	53	53	37	32	59	42
10:00	29	22	30	29	37	28	38	27	48	42	58	36	20	19	37	29
11:00	18	13	26	14	17	14	17	27	32	25	45	18	42	20	28	19
Lane	2063	2194	2308	2443	2157	2249	2336	2485	2285	2321	1852	1848	1336	1323	2047	2126
Day	4257		4751		4406		4821		4606		3700		2659		4173	
AM Peak	07:00	07:00	07:00	08:00	07:00	07:00	07:00	07:00	08:00	08:00	10:00	10:00	11:00	09:00	07:00	08:00
Vol.	206	172	182	182	192	174	178	174	163	184	199	157	107	133	141	155
PM Peak	16:00	17:00	17:00	17:00	17:00	17:00	16:00	17:00	14:00	14:00	12:00	12:00	12:00	12:00	14:00	17:00
Vol.	206	193	245	216	194	194	217	298	207	206	133	146	108	86	169	176

Accurate Counts
978-664-2565

Location : Union Street South of
Location : Garden Street
City/State: Milford, NH
Counter : 16217

517840V3
Site Code: 51784003

Start Time	29-May-06 SB	29-May-06 NB	Tue SB	Tue NB	Wed SB	Wed NB	Thu SB	Thu NB	Fri SB	Fri NB	Sat SB	Sat NB	Sun SB	Sun NB	Week Average SB	Week Average NB
12:00 AM	13	20	13	9	10	8	8	6	20	9	32	0	37	0	19	7
01:00	18	12	4	5	5	7	11	4	5	6	26	0	19	0	13	5
02:00	7	8	6	6	1	3	3	5	5	4	18	0	14	0	8	4
03:00	20	16	1	6	0	5	0	6	2	8	12	0	6	0	6	6
04:00	9	9	4	10	4	6	7	7	3	9	8	0	5	0	6	6
05:00	12	9	15	29	19	34	17	44	11	25	25	0	16	0	16	20
06:00	7	18	57	82	49	104	61	81	47	82	42	0	41	0	43	52
07:00	28	36	**190**	**187**	**201**	**197**	**188**	**191**	179	**199**	105	0	70	0	137	**116**
08:00	51	55	140	167	151	166	152	171	158	199	153	0	119	0	132	108
09:00	74	100	107	136	123	120	115	119	247	2	242	0	**183**	0	156	68
10:00	107	152	131	132	95	104	100	106	195	0	293	0	181	0	157	71
11:00	**187**	**169**	115	124	103	128	105	105	**253**	0	**314**	0	179	0	**179**	75
12:00 PM	88	67	135	147	124	137	123	157	274	0	**297**	0	238	0	183	73
01:00	94	81	110	120	158	122	140	155	238	0	239	0	**239**	0	174	68
02:00	92	88	188	203	234	171	208	**216**	**364**	0	163	0	196	0	206	97
03:00	81	**107**	178	181	**270**	180	161	187	345	0	231	0	199	0	**209**	94
04:00	96	85	182	168	192	200	180	216	344	0	165	0	191	0	193	96
05:00	90	89	**217**	**205**	212	**206**	206	207	323	0	172	0	188	0	201	**101**
06:00	**103**	89	159	152	177	163	**213**	201	239	0	167	0	156	0	173	86
07:00	89	84	149	132	158	104	190	127	176	0	123	0	155	0	149	64
08:00	77	60	103	84	117	111	166	134	132	0	117	0	123	0	119	56
09:00	63	46	57	44	96	70	76	77	88	0	109	0	83	0	82	34
10:00	32	23	31	18	35	23	38	34	72	0	76	0	47	0	47	14
11:00	23	20	12	21	19	19	25	13	85	0	40	0	35	0	34	10
Lane	1461	1443	2304	2368	2553	2388	2493	2569	3805	543	3169	0	2720	0	2642	1331
Day	2904		4672		4941		5062		4348		3169		2720		3973	
AM Peak	11:00	11:00	07:00	07:00	07:00	07:00	07:00	07:00	11:00	07:00	11:00		09:00		11:00	07:00
Vol.	187	169	190	187	201	197	188	191	253	199	314		183		179	116
PM Peak	18:00	15:00	17:00	17:00	15:00	17:00	18:00	14:00	14:00		12:00		13:00		15:00	17:00
Vol.	103	107	217	205	270	206	213	216	364		297		239		209	101

Accurate Counts
978-664-2565

Location : Union Street South of
Location : Garden Street
City/State: Milford, NH
Counter : 16217

517840V3
Site Code: 51784003

Start Time	05-Jun-06 SB	05-Jun-06 NB	Tue SB	Tue NB	Wed SB	Wed NB	Thu SB	Thu NB	Fri SB	Fri NB	Sat SB	Sat NB	Sun SB	Sun NB	Week Average SB	Week Average NB
12:00 AM	20	0	*	*	*	*	*	*	*	*	*	*	*	*	20	0
01:00	7	0	*	*	*	*	*	*	*	*	*	*	*	*	7	0
02:00	3	0	*	*	*	*	*	*	*	*	*	*	*	*	3	0
03:00	11	0	*	*	*	*	*	*	*	*	*	*	*	*	11	0
04:00	11	0	*	*	*	*	*	*	*	*	*	*	*	*	11	0
05:00	**39**	0	*	*	*	*	*	*	*	*	*	*	*	*	**39**	0
06:00	*	*	*	*	*	*	*	*	*	*	*	*	*	*	*	*
07:00	*	*	*	*	*	*	*	*	*	*	*	*	*	*	*	*
08:00	*	*	*	*	*	*	*	*	*	*	*	*	*	*	*	*
09:00	*	*	*	*	*	*	*	*	*	*	*	*	*	*	*	*
10:00	*	*	*	*	*	*	*	*	*	*	*	*	*	*	*	*
11:00	*	*	*	*	*	*	*	*	*	*	*	*	*	*	*	*
12:00 PM	*	*	*	*	*	*	*	*	*	*	*	*	*	*	*	*
01:00	*	*	*	*	*	*	*	*	*	*	*	*	*	*	*	*
02:00	*	*	*	*	*	*	*	*	*	*	*	*	*	*	*	*
03:00	*	*	*	*	*	*	*	*	*	*	*	*	*	*	*	*
04:00	*	*	*	*	*	*	*	*	*	*	*	*	*	*	*	*
05:00	*	*	*	*	*	*	*	*	*	*	*	*	*	*	*	*
06:00	*	*	*	*	*	*	*	*	*	*	*	*	*	*	*	*
07:00	*	*	*	*	*	*	*	*	*	*	*	*	*	*	*	*
08:00	*	*	*	*	*	*	*	*	*	*	*	*	*	*	*	*
09:00	*	*	*	*	*	*	*	*	*	*	*	*	*	*	*	*
10:00	*	*	*	*	*	*	*	*	*	*	*	*	*	*	*	*
11:00	*	*	*	*	*	*	*	*	*	*	*	*	*	*	*	*
Lane	91	0	0	0	0	0	0	0	0	0	0	0	0	0	91	0
Day	91		0		0		0		0		0		0		91	
AM Peak	05:00														05:00	
Vol.	39														39	
PM Peak																
Vol.																
Comb. Total	7252		9423		9347		13235		13373		11498		8506		12358	
ADT	Not Calculated															

Accurate Counts
978-664-2565

Location : Union Street South of
Location : Garden Street
City/State: Milford, NH
Counter : 2567

51784AV3
Site Code: 51784003

Start Time	05-Jun-06 SB	05-Jun-06 NB	Tue SB	Tue NB	Wed SB	Wed NB	Thu SB	Thu NB	Fri SB	Fri NB	Sat SB	Sat NB	Sun SB	Sun NB	Week Average SB	Week Average NB
12:00 AM	*	*	8	10	11	8	12	9	11	9	18	16	*	*	12	10
01:00	*	*	7	2	3	3	3	4	6	8	15	7	*	*	7	5
02:00	*	*	3	3	2	1	1	3	2	1	5	6	*	*	3	3
03:00	*	*	2	5	1	5	5	7	3	6	3	4	*	*	3	5
04:00	*	*	6	9	6	8	6	9	6	6	6	5	*	*	6	7
05:00	*	*	15	33	12	32	17	35	20	36	8	16	*	*	14	30
06:00	*	*	55	105	60	90	60	86	59	93	13	45	*	*	49	84
07:00	**195**	**195**	**158**	166	**204**	**169**	**164**	**166**	**167**	**185**	36	80	*	*	**154**	**160**
08:00	136	161	129	**173**	139	168	123	148	125	164	52	105	*	*	117	153
09:00	76	134	106	138	87	118	86	96	79	102	108	137	*	*	90	121
10:00	87	103	97	105	102	97	100	99	94	125	134	144	*	*	102	112
11:00	110	125	118	108	116	116	97	115	123	134	**193**	**174**	*	*	126	129
12:00 PM	117	139	117	134	99	122	124	121	124	134	**159**	**159**	*	*	123	135
01:00	119	132	121	122	107	100	114	148	137	118	*	*	*	*	120	124
02:00	197	203	191	177	**193**	**192**	188	**196**	209	196	*	*	*	*	196	**193**
03:00	**222**	156	184	197	155	168	**189**	162	**241**	187	*	*	*	*	**198**	174
04:00	169	177	**212**	200	178	162	184	178	211	192	*	*	*	*	191	182
05:00	194	**208**	178	**203**	136	129	157	169	193	**215**	*	*	*	*	172	185
06:00	128	151	165	187	112	110	146	136	151	152	*	*	*	*	140	147
07:00	108	119	127	100	105	84	110	119	111	118	*	*	*	*	112	108
08:00	122	76	102	62	81	49	86	77	97	65	*	*	*	*	98	66
09:00	60	35	65	39	64	38	51	54	62	67	*	*	*	*	60	47
10:00	27	20	39	27	23	14	26	31	46	35	*	*	*	*	32	25
11:00	14	13	24	16	18	8	20	17	29	22	*	*	*	*	21	15
Lane	2081	2147	2229	2321	2014	1991	2069	2185	2306	2370	750	898	0	0	2146	2220
Day	4228		4550		4005		4254		4676		1648		0		4366	
AM Peak	07:00	07:00	07:00	08:00	07:00	07:00	07:00	07:00	07:00	07:00	11:00	11:00			07:00	07:00
Vol.	195	195	158	173	204	169	164	166	167	185	193	174			154	160
PM Peak	15:00	17:00	16:00	17:00	14:00	14:00	15:00	14:00	15:00	17:00	12:00	12:00			15:00	14:00
Vol.	222	208	212	203	193	192	189	196	241	215	159	159			198	193
Comb. Total	4228		4550		4005		4254		4676		1648		0		4366	

ADT Not Calculated

Attachment D-7

Vehicle Classification Data – Union Street south of Garden Street

Location : Union Street South of
Location : Garden Street
City/State: Milford, NH
Counter : 16217

Accurate Counts
978-664-2565

517840C3
Site Code: 51784003

Southbound

Start Time	Bikes	Cars & Trailers	2 Axle Long	Buses	2 Axle 6 Tire	3 Axle Single	4 Axle Single	<5 Axl Double	5 Axle Double	>6 Axl Double	<6 Axl Multi	6 Axle Multi	>6 Axl Multi	Total
05/18/06	*	*	*	*	*	*	*	*	*	*	*	*	*	*
01:00	*	*	*	*	*	*	*	*	*	*	*	*	*	*
02:00	*	*	*	*	*	*	*	*	*	*	*	*	*	*
03:00	*	*	*	*	*	*	*	*	*	*	*	*	*	*
04:00	*	*	*	*	*	*	*	*	*	*	*	*	*	*
05:00	*	*	*	*	*	*	*	*	*	*	*	*	*	*
06:00	*	*	*	*	*	*	*	*	*	*	*	*	*	*
07:00	*	*	*	*	*	*	*	*	*	*	*	*	*	*
08:00	*	*	*	*	*	*	*	*	*	*	*	*	*	*
09:00	*	*	*	*	*	*	*	*	*	*	*	*	*	*
10:00	**1**	**80**	**8**	0	**4**	0	0	**2**	0	**1**	0	0	0	**96**
11:00	0	70	7	0	3	**1**	0	1	0	0	0	0	0	82
12 PM	1	108	13	1	0	0	0	**2**	0	0	0	0	0	125
13:00	2	98	21	1	**2**	**1**	0	0	0	0	0	0	0	125
14:00	1	142	19	**4**	1	0	0	0	0	**1**	0	0	0	168
15:00	3	151	15	0	2	1	0	0	0	0	0	0	0	172
16:00	1	155	**23**	0	0	0	0	0	0	0	0	0	0	179
17:00	4	**159**	20	0	0	1	0	0	0	0	0	0	0	**184**
18:00	3	121	14	1	0	0	0	0	0	0	0	0	0	139
19:00	**7**	123	21	0	0	0	0	0	0	0	0	0	0	151
20:00	3	109	13	0	0	0	0	0	0	0	0	0	0	125
21:00	0	53	8	0	0	1	0	0	0	0	0	0	0	62
22:00	3	37	1	0	0	0	0	0	0	0	0	0	0	41
23:00	0	23	2	0	0	0	0	0	0	0	0	0	0	25
Day Total	29	1429	185	7	12	5	0	5	0	2	0	0	0	1674
Percent	1.7%	85.4%	11.1%	0.4%	0.7%	0.3%	0.0%	0.3%	0.0%	0.1%	0.0%	0.0%	0.0%	
AM Peak	10:00	10:00	10:00		10:00	11:00		10:00		10:00				10:00
Vol.	1	80	8		4	1		2		1				96
PM Peak	19:00	17:00	16:00	14:00	13:00	13:00		12:00		14:00				17:00
Vol.	7	159	23	4	2	1		2		1				184

Location : Union Street South of
Location : Garden Street
City/State: Milford, NH
Counter : 16217

Accurate Counts
978-664-2565

517840C3
Site Code: 51784003

Southbound

Start Time	Bikes	Cars & Trailers	2 Axle Long	Buses	2 Axle 6 Tire	3 Axle Single	4 Axle Single	<5 Axl Double	5 Axle Double	>6 Axl Double	<6 Axl Multi	6 Axle Multi	>6 Axl Multi	Total
05/19/06	0	13	2	0	0	0	0	0	0	0	0	0	0	15
01:00	0	2	0	0	0	0	0	0	0	0	0	0	0	2
02:00	0	4	0	0	0	0	0	0	0	0	0	0	0	4
03:00	0	2	0	0	0	0	0	0	0	0	0	0	0	2
04:00	0	2	0	0	0	0	0	0	0	0	0	0	0	2
05:00	0	13	1	0	0	0	0	0	0	0	0	0	0	14
06:00	0	45	3	0	0	0	0	0	0	0	0	0	0	48
07:00	**3**	**148**	16	1	**4**	**3**	0	**1**	**1**	**1**	0	0	0	**178**
08:00	1	96	**20**	**11**	0	1	0	1	0	0	0	0	0	130
09:00	1	83	12	0	0	0	0	1	0	0	0	0	0	97
10:00	2	80	10	0	0	0	0	1	0	1	0	0	0	94
11:00	0	72	9	0	2	0	0	1	1	0	0	0	0	85
12 PM	3	118	15	0	**2**	**1**	0	0	0	0	0	0	0	139
13:00	0	106	15	0	2	0	0	**1**	0	**1**	0	0	0	125
14:00	0	165	24	**1**	0	1	0	0	0	0	0	0	0	191
15:00	0	121	19	0	2	0	0	0	0	0	0	0	0	142
16:00	1	**169**	**25**	0	0	0	0	0	**1**	0	0	0	0	**196**
17:00	**4**	135	17	0	0	0	0	0	0	0	0	0	0	156
18:00	2	137	18	0	0	0	0	0	0	0	0	0	0	157
19:00	4	102	10	0	0	0	0	0	0	0	0	0	0	116
20:00	0	69	10	0	1	1	0	0	0	0	0	0	0	81
21:00	0	64	8	0	0	0	0	0	0	0	0	0	0	72
22:00	1	52	6	0	0	0	0	0	0	0	0	0	0	59
23:00	0	30	3	0	0	0	0	0	0	0	0	0	0	33
Day Total	22	1828	243	13	13	7	0	6	3	3	0	0	0	2138
Percent	1.0%	85.5%	11.4%	0.6%	0.6%	0.3%	0.0%	0.3%	0.1%	0.1%	0.0%	0.0%	0.0%	
AM Peak	07:00	07:00	08:00	08:00	07:00	07:00		07:00	07:00	07:00				07:00
Vol.	3	148	20	11	4	3		1	1	1				178
PM Peak	17:00	16:00	16:00	14:00	12:00	12:00		13:00	16:00	13:00				16:00
Vol.	4	169	25	1	2	1		1	1	1				196

Location : Union Street South of
Location : Garden Street
City/State: Milford, NH
Counter : 16217

Accurate Counts
978-664-2565

517840C3
Site Code: 51784003

Southbound

Start Time	Bikes	Cars & Trailers	2 Axle Long	Buses	2 Axle 6 Tire	3 Axle Single	4 Axle Single	<5 Axl Double	5 Axle Double	>6 Axl Double	<6 Axl Multi	6 Axle Multi	>6 Axl Multi	Total
05/20/06	0	17	2	0	0	0	0	0	0	0	0	0	0	19
01:00	0	13	0	0	0	0	0	0	0	0	0	0	0	13
02:00	0	3	1	0	0	0	0	0	0	0	0	0	0	4
03:00	0	7	0	0	0	0	0	0	0	0	0	0	0	7
04:00	0	8	0	0	0	0	0	0	0	0	0	0	0	8
05:00	0	7	0	0	0	0	0	0	0	0	0	0	0	7
06:00	0	21	4	0	0	0	0	0	0	0	0	0	0	25
07:00	0	45	12	0	**1**	**1**	0	**1**	0	0	0	0	0	60
08:00	6	117	14	0	0	0	0	1	0	0	0	0	0	138
09:00	**8**	172	22	0	0	0	0	1	0	0	0	0	0	203
10:00	2	186	**36**	0	0	0	0	0	0	**1**	0	0	0	225
11:00	5	**265**	36	0	0	0	0	1	0	0	0	0	0	**307**
12 PM	4	**166**	**25**	0	**1**	0	0	0	0	0	0	0	0	**196**
13:00	0	153	24	0	0	0	0	0	0	0	0	0	0	177
14:00	2	129	15	0	0	0	0	0	0	0	0	0	0	146
15:00	4	122	20	0	0	**1**	0	0	0	0	0	0	0	147
16:00	3	108	13	0	0	0	0	0	0	0	0	0	0	124
17:00	1	103	10	0	1	0	0	0	0	0	0	0	0	115
18:00	**6**	94	13	0	0	0	0	0	0	0	0	0	0	113
19:00	3	80	8	0	0	0	0	0	0	0	0	0	0	91
20:00	1	57	8	0	0	0	0	0	0	0	0	0	0	66
21:00	2	58	2	0	0	0	0	0	0	0	0	0	0	62
22:00	0	44	2	0	0	0	0	0	0	0	0	0	0	46
23:00	0	29	4	0	1	0	0	0	0	0	0	0	0	34
Day Total	47	2004	271	0	4	2	0	4	0	1	0	0	0	2333
Percent	2.0%	85.9%	11.6%	0.0%	0.2%	0.1%	0.0%	0.2%	0.0%	0.0%	0.0%	0.0%	0.0%	
AM Peak	09:00	11:00	10:00		07:00	07:00		07:00		10:00				11:00
Vol.	8	265	36		1	1		1		1				307
PM Peak	18:00	12:00	12:00		12:00	15:00								12:00
Vol.	6	166	25		1	1								196

Location : Union Street South of
Location : Garden Street
City/State: Milford, NH
Counter : 16217
Southbound

Accurate Counts
978-664-2565

517840C3
Site Code: 51784003

Start Time	Bikes	Cars & Trailers	2 Axle Long	Buses	2 Axle 6 Tire	3 Axle Single	4 Axle Single	<5 Axl Double	5 Axle Double	>6 Axl Double	<6 Axl Multi	6 Axle Multi	>6 Axl Multi	Total
05/21/06	0	15	1	0	0	0	0	0	0	0	0	0	0	16
01:00	1	12	3	0	0	0	0	0	0	0	0	0	0	16
02:00	0	12	0	0	0	0	0	0	0	0	0	0	0	12
03:00	0	7	1	0	0	0	0	0	0	0	0	0	0	8
04:00	0	2	0	0	0	0	0	0	0	0	0	0	0	2
05:00	0	9	0	0	0	0	0	0	0	0	0	0	0	9
06:00	1	7	1	1	0	0	0	0	0	0	0	0	0	10
07:00	0	35	5	0	0	0	0	0	0	0	0	0	0	40
08:00	2	32	9	0	0	0	0	0	0	0	0	0	0	43
09:00	0	104	9	0	0	0	0	0	0	0	0	0	0	113
10:00	1	68	6	**2**	**1**	0	0	0	0	0	0	0	0	78
11:00	**4**	**110**	**20**	0	0	0	0	0	0	0	0	0	0	**134**
12 PM	1	108	12	0	0	**1**	0	0	0	0	0	0	0	122
13:00	2	**124**	9	0	1	0	0	**1**	0	0	0	0	0	**137**
14:00	0	106	13	0	0	0	0	0	0	0	0	0	0	119
15:00	4	116	7	0	1	0	0	0	0	0	0	0	0	128
16:00	1	82	10	0	0	0	0	0	0	0	0	0	0	93
17:00	1	94	**19**	0	0	0	0	0	0	0	0	0	0	114
18:00	1	74	15	0	**2**	0	0	0	0	0	0	0	0	92
19:00	4	57	3	0	0	0	0	0	0	0	0	0	0	64
20:00	**6**	63	6	0	0	0	0	0	0	0	0	0	0	75
21:00	0	55	3	0	0	1	0	0	0	0	0	0	0	59
22:00	0	23	0	0	0	0	0	0	0	0	0	0	0	23
23:00	0	12	0	0	0	0	0	0	0	0	0	0	0	12
Day Total	29	1327	152	3	5	2	0	1	0	0	0	0	0	1519
Percent	1.9%	87.4%	10.0%	0.2%	0.3%	0.1%	0.0%	0.1%	0.0%	0.0%	0.0%	0.0%	0.0%	
AM Peak	11:00	11:00	11:00	10:00	10:00									11:00
Vol.	4	110	20	2	1									134
PM Peak	20:00	13:00	17:00		18:00	12:00		13:00						13:00
Vol.	6	124	19		2	1		1						137

Location : Union Street South of
Location : Garden Street
City/State: Milford, NH
Counter : 16217

Accurate Counts
978-664-2565

517840C3
Site Code: 51784003

Southbound

Start Time	Bikes	Cars & Trailers	2 Axle Long	Buses	2 Axle 6 Tire	3 Axle Single	4 Axle Single	<5 Axl Double	5 Axle Double	>6 Axl Double	<6 Axl Multi	6 Axle Multi	>6 Axl Multi	Total
05/22/06	0	5	0	0	0	0	0	0	0	0	0	0	0	5
01:00	0	9	3	0	0	0	0	0	0	0	0	0	0	12
02:00	0	5	0	0	0	0	0	0	0	0	0	0	0	5
03:00	0	3	1	0	0	0	0	0	0	0	0	0	0	4
04:00	0	3	1	0	0	0	0	0	0	0	0	0	0	4
05:00	1	13	0	0	0	0	0	0	0	0	0	0	0	14
06:00	0	46	6	1	0	1	0	0	0	0	0	0	0	54
07:00	0	**169**	**31**	1	**1**	0	0	**1**	**2**	**1**	0	0	0	**206**
08:00	1	85	15	**11**	0	**2**	0	1	0	0	0	0	0	115
09:00	0	63	15	0	1	1	0	0	0	0	0	0	0	80
10:00	**2**	64	9	0	0	0	0	0	0	1	0	0	0	76
11:00	1	77	8	0	0	0	0	0	0	0	0	0	0	86
12 PM	3	106	9	0	1	0	0	0	0	0	0	0	0	119
13:00	3	87	10	**1**	**5**	**1**	0	0	0	**1**	0	0	0	108
14:00	3	142	20	1	1	0	0	0	0	0	0	0	0	167
15:00	2	163	14	0	4	1	0	0	**1**	0	0	0	0	185
16:00	**9**	**171**	**24**	0	1	0	0	0	0	1	0	0	0	**206**
17:00	4	131	18	0	0	0	0	0	0	0	0	0	0	153
18:00	2	107	15	0	1	0	0	0	0	0	0	0	0	125
19:00	1	101	17	0	0	0	0	0	0	0	0	0	0	119
20:00	1	99	6	0	0	0	0	**1**	0	0	0	0	0	107
21:00	0	58	8	0	0	0	0	0	0	0	0	0	0	66
22:00	0	28	1	0	0	0	0	0	0	0	0	0	0	29
23:00	0	18	0	0	0	0	0	0	0	0	0	0	0	18
Day Total	33	1753	231	15	15	6	0	3	3	4	0	0	0	2063
Percent	1.6%	85.0%	11.2%	0.7%	0.7%	0.3%	0.0%	0.1%	0.1%	0.2%	0.0%	0.0%	0.0%	
AM Peak	10:00	07:00	07:00	08:00	07:00	08:00		07:00	07:00	07:00				07:00
Vol.	2	169	31	11	1	2		1	2	1				206
PM Peak	16:00	16:00	16:00	13:00	13:00	13:00		20:00	15:00	13:00				16:00
Vol.	9	171	24	1	5	1		1	1	1				206

Location : Union Street South of
Location : Garden Street
City/State: Milford, NH
Counter : 16217

Accurate Counts
978-664-2565

517840C3
Site Code: 51784003

Southbound

Start Time	Bikes	Cars & Trailers	2 Axle Long	Buses	2 Axle 6 Tire	3 Axle Single	4 Axle Single	<5 Axl Double	5 Axle Double	>6 Axl Double	<6 Axl Multi	6 Axle Multi	>6 Axl Multi	Total
05/23/06	0	10	1	0	0	0	0	0	0	0	0	0	0	11
01:00	0	2	0	0	0	0	0	0	0	0	0	0	0	2
02:00	0	1	0	0	0	0	0	0	0	0	0	0	0	1
03:00	0	1	0	0	0	0	0	0	0	0	0	0	0	1
04:00	0	2	1	0	0	0	0	0	0	0	0	0	0	3
05:00	0	15	0	0	0	0	0	0	0	0	0	0	0	15
06:00	0	49	4	1	0	0	0	0	0	0	0	0	0	54
07:00	0	**157**	**22**	1	0	1	0	0	0	**1**	0	0	0	**182**
08:00	1	99	10	**12**	**1**	**3**	0	0	0	0	0	0	0	126
09:00	0	87	19	0	1	2	0	0	0	0	0	0	0	109
10:00	0	86	14	0	1	1	0	0	0	0	0	0	0	102
11:00	**4**	82	13	0	0	0	0	0	0	1	0	0	0	100
12 PM	3	113	15	1	0	**3**	0	**1**	0	0	0	0	0	136
13:00	2	105	12	0	**2**	3	0	0	0	**1**	0	0	0	125
14:00	1	200	26	**3**	1	2	0	1	0	0	0	0	0	234
15:00	0	123	19	0	0	3	0	0	0	1	0	0	0	146
16:00	**7**	179	25	0	0	1	0	0	0	0	0	0	**1**	213
17:00	3	**211**	**28**	0	0	2	0	0	**1**	0	0	0	0	**245**
18:00	3	132	16	0	1	1	0	0	0	0	0	0	0	153
19:00	1	114	11	0	0	1	0	1	0	0	0	0	0	128
20:00	1	91	9	0	0	1	0	0	0	0	0	0	0	102
21:00	0	57	7	0	0	0	0	0	0	0	0	0	0	64
22:00	0	27	2	0	1	0	0	0	0	0	0	0	0	30
23:00	0	22	4	0	0	0	0	0	0	0	0	0	0	26
Day Total	26	1965	258	18	8	24	0	3	1	4	0	0	1	2308
Percent	1.1%	85.1%	11.2%	0.8%	0.3%	1.0%	0.0%	0.1%	0.0%	0.2%	0.0%	0.0%	0.0%	
AM Peak	11:00	07:00	07:00	08:00	08:00	08:00				07:00				07:00
Vol.	4	157	22	12	1	3				1				182
PM Peak	16:00	17:00	17:00	14:00	13:00	12:00		12:00	17:00	13:00			16:00	17:00
Vol.	7	211	28	3	2	3		1	1	1			1	245

Location : Union Street South of
Location : Garden Street
City/State: Milford, NH
Counter : 16217
Southbound

Accurate Counts
978-664-2565

517840C3
Site Code: 51784003

Start Time	Bikes	Cars & Trailers	2 Axle Long	Buses	2 Axle 6 Tire	3 Axle Single	4 Axle Single	<5 Axl Double	5 Axle Double	>6 Axl Double	<6 Axl Multi	6 Axle Multi	>6 Axl Multi	Total
05/24/06	0	9	0	0	0	0	0	0	0	0	0	0	0	9
01:00	0	4	0	0	0	0	0	0	0	0	0	0	0	4
02:00	0	2	0	0	0	0	0	0	0	0	0	0	0	2
03:00	0	1	0	0	0	0	0	0	0	0	0	0	0	1
04:00	0	3	0	0	0	0	0	0	0	0	0	0	0	3
05:00	**3**	11	3	0	0	0	0	0	0	0	0	0	0	17
06:00	0	56	3	1	1	0	0	0	0	0	0	0	0	61
07:00	3	**159**	**27**	1	0	1	0	0	0	**1**	0	0	0	**192**
08:00	1	86	16	**13**	**2**	2	0	0	0	1	0	0	0	121
09:00	1	73	15	0	1	**3**	0	0	0	0	0	0	0	93
10:00	0	79	9	0	1	3	0	0	0	1	0	0	0	93
11:00	3	102	20	0	0	0	0	0	0	1	0	0	0	126
12 PM	4	91	12	0	**1**	1	0	0	**1**	0	0	0	0	110
13:00	1	96	10	0	0	1	0	**1**	0	**2**	0	0	0	111
14:00	1	142	**26**	**1**	0	1	0	0	1	0	0	0	0	172
15:00	0	147	19	0	1	1	0	0	0	0	0	0	0	168
16:00	2	134	15	0	0	**2**	0	0	0	0	0	0	0	153
17:00	**5**	**168**	20	0	0	1	0	0	0	0	0	0	0	**194**
18:00	4	130	13	0	0	2	0	0	0	0	0	0	0	149
19:00	2	123	20	0	0	0	0	1	0	1	0	0	0	147
20:00	2	101	14	0	0	0	0	0	0	0	0	0	0	117
21:00	1	53	6	0	0	0	0	0	0	0	0	0	0	60
22:00	1	34	2	0	0	0	0	0	0	0	0	0	0	37
23:00	1	16	0	0	0	0	0	0	0	0	0	0	0	17
Day Total	35	1820	250	16	7	18	0	2	2	7	0	0	0	2157
Percent	1.6%	84.4%	11.6%	0.7%	0.3%	0.8%	0.0%	0.1%	0.1%	0.3%	0.0%	0.0%	0.0%	
AM Peak	05:00	07:00	07:00	08:00	08:00	09:00				07:00				07:00
Vol.	3	159	27	13	2	3				1				192
PM Peak	17:00	17:00	14:00	14:00	12:00	16:00		13:00	12:00	13:00				17:00
Vol.	5	168	26	1	1	2		1	1	2				194

Location : Union Street South of
Location : Garden Street
City/State: Milford, NH
Counter : 16217
Southbound

Accurate Counts
978-664-2565

517840C3
Site Code: 51784003

Start Time	Bikes	Cars & Trailers	2 Axle Long	Buses	2 Axle 6 Tire	3 Axle Single	4 Axle Single	<5 Axl Double	5 Axle Double	>6 Axl Double	<6 Axl Multi	6 Axle Multi	>6 Axl Multi	Total
05/25/06	**1**	10	0	0	0	0	0	0	0	0	0	0	0	11
01:00	0	2	0	0	0	0	0	0	0	0	0	0	0	2
02:00	0	1	0	0	0	0	0	0	0	0	0	0	0	1
03:00	0	3	0	0	0	0	0	0	0	0	0	0	0	3
04:00	1	4	0	0	0	0	0	0	0	0	0	0	0	5
05:00	0	18	2	0	0	0	0	0	0	0	0	0	0	20
06:00	1	49	11	1	0	0	0	0	0	0	0	0	0	62
07:00	1	**157**	15	1	1	1	0	**1**	**1**	0	0	0	0	**178**
08:00	0	93	**20**	**12**	0	1	0	0	1	**1**	0	0	0	128
09:00	1	75	18	0	**3**	1	**1**	0	0	0	0	0	0	99
10:00	0	66	8	0	2	1	0	0	0	0	0	0	0	77
11:00	0	85	13	0	1	**2**	0	0	0	0	0	0	0	101
12 PM	1	114	19	0	0	0	0	0	0	0	0	0	0	134
13:00	3	112	15	0	**1**	**2**	0	0	0	0	0	0	0	133
14:00	2	159	20	**1**	0	0	0	0	0	0	0	0	0	182
15:00	1	171	**23**	0	1	1	0	0	0	0	0	0	0	197
16:00	2	**192**	21	0	0	1	0	**1**	0	0	0	0	0	**217**
17:00	**7**	162	16	0	0	2	0	0	0	0	0	0	0	187
18:00	5	150	19	0	0	0	0	0	0	0	0	0	0	174
19:00	2	113	19	0	1	0	0	0	0	0	0	0	0	135
20:00	6	132	15	0	0	0	0	0	0	0	0	0	0	153
21:00	1	75	6	0	0	0	0	0	0	0	0	0	0	82
22:00	1	33	4	0	0	0	0	0	0	0	0	0	0	38
23:00	0	15	2	0	0	0	0	0	0	0	0	0	0	17
Day Total	36	1991	266	15	10	12	1	2	2	1	0	0	0	2336
Percent	1.5%	85.2%	11.4%	0.6%	0.4%	0.5%	0.0%	0.1%	0.1%	0.0%	0.0%	0.0%	0.0%	
AM Peak	00:00	07:00	08:00	08:00	09:00	11:00	09:00	07:00	07:00	08:00				07:00
Vol.	1	157	20	12	3	2	1	1	1	1				178
PM Peak	17:00	16:00	15:00	14:00	13:00	13:00		16:00						16:00
Vol.	7	192	23	1	1	2		1						217

Location : Union Street South of
Location : Garden Street
City/State: Milford, NH
Counter : 16217

Accurate Counts
978-664-2565

517840C3
Site Code: 51784003

Southbound

Start Time	Bikes	Cars & Trailers	2 Axle Long	Buses	2 Axle 6 Tire	3 Axle Single	4 Axle Single	<5 Axl Double	5 Axle Double	>6 Axl Double	<6 Axl Multi	6 Axle Multi	>6 Axl Multi	Total
05/26/06	0	16	0	1	0	0	0	0	0	0	0	0	0	17
01:00	0	9	0	0	0	0	0	0	0	0	0	0	0	9
02:00	0	4	0	0	0	0	0	0	0	0	0	0	0	4
03:00	0	3	0	0	0	0	0	0	0	0	0	0	0	3
04:00	0	3	0	0	0	0	0	0	0	0	0	0	0	3
05:00	0	18	1	0	0	0	0	0	0	0	0	0	0	19
06:00	0	40	4	1	0	0	0	0	0	0	0	0	0	45
07:00	**3**	**142**	13	0	2	**2**	0	0	0	0	0	0	0	162
08:00	3	123	**23**	**13**	0	0	0	**1**	0	0	0	0	0	**163**
09:00	1	101	13	0	2	0	0	0	**1**	0	0	0	0	118
10:00	2	71	17	0	1	1	0	1	1	0	0	0	0	94
11:00	0	134	17	0	**4**	1	0	0	0	0	0	0	0	156
12 PM	2	162	**30**	1	**1**	0	0	**1**	0	0	0	0	0	197
13:00	0	112	23	1	1	**1**	0	0	0	0	0	0	0	138
14:00	**4**	**174**	26	**2**	1	0	0	0	0	0	0	0	0	**207**
15:00	3	171	26	0	0	0	0	0	0	0	0	0	0	200
16:00	4	154	14	0	1	0	0	0	0	0	0	0	0	173
17:00	1	144	20	0	1	1	0	0	**1**	**1**	0	0	0	169
18:00	0	96	12	1	0	0	0	1	0	0	0	0	0	110
19:00	1	81	10	0	0	0	0	0	0	0	0	0	0	92
20:00	0	70	8	0	0	0	0	0	0	0	0	0	0	78
21:00	0	44	3	0	0	1	0	0	0	0	0	0	0	48
22:00	0	47	1	0	0	0	0	0	0	0	0	0	0	48
23:00	0	28	4	0	0	0	0	0	0	0	0	0	0	32
Day Total	24	1947	265	20	14	7	0	4	3	1	0	0	0	2285
Percent	1.1%	85.2%	11.6%	0.9%	0.6%	0.3%	0.0%	0.2%	0.1%	0.0%	0.0%	0.0%	0.0%	
AM Peak	07:00	07:00	08:00	08:00	11:00	07:00		08:00	09:00					08:00
Vol.	3	142	23	13	4	2		1	1					163
PM Peak	14:00	14:00	12:00	14:00	12:00	13:00		12:00	17:00	17:00				14:00
Vol.	4	174	30	2	1	1		1	1	1				207

Location : Union Street South of
Location : Garden Street
City/State: Milford, NH
Counter : 16217

Accurate Counts
978-664-2565

517840C3
Site Code: 51784003

Southbound

Start Time	Bikes	Cars & Trailers	2 Axle Long	Buses	2 Axle 6 Tire	3 Axle Single	4 Axle Single	<5 Axl Double	5 Axle Double	>6 Axl Double	<6 Axl Multi	6 Axle Multi	>6 Axl Multi	Total
05/27/06	0	21	2	0	0	0	0	0	0	0	0	0	0	23
01:00	0	11	2	0	0	0	0	0	0	0	0	0	0	13
02:00	0	9	0	0	0	0	0	0	0	0	0	0	0	9
03:00	0	5	0	0	0	0	0	0	0	0	0	0	0	5
04:00	0	2	0	0	0	0	0	0	0	0	0	0	0	2
05:00	0	16	2	0	0	0	0	0	0	0	0	0	0	18
06:00	0	14	3	0	0	0	0	0	0	0	0	0	0	17
07:00	0	33	7	0	0	0	0	0	0	0	0	0	0	40
08:00	2	70	9	0	0	0	0	0	0	0	0	0	0	81
09:00	5	83	15	0	0	0	0	0	0	0	0	0	0	103
10:00	**7**	164	**27**	0	**1**	0	0	0	0	0	0	0	0	**199**
11:00	2	**167**	25	0	1	0	0	0	0	0	0	0	0	195
12 PM	0	107	**24**	0	1	**1**	0	0	0	0	0	0	0	**133**
13:00	**4**	101	16	0	1	0	0	0	0	0	0	0	0	122
14:00	0	111	14	0	0	1	0	0	0	0	0	0	0	126
15:00	1	110	18	0	0	0	0	0	0	0	0	0	0	129
16:00	3	**117**	11	0	0	0	0	0	0	0	0	0	0	131
17:00	3	86	10	0	0	0	0	**1**	0	0	0	0	0	100
18:00	4	80	4	0	1	1	0	0	0	0	0	0	0	90
19:00	1	76	8	0	**2**	0	0	0	0	0	0	0	0	87
20:00	1	66	6	0	0	0	0	0	0	0	0	0	0	73
21:00	0	51	2	0	0	0	0	0	0	0	0	0	0	53
22:00	0	52	6	0	0	0	0	0	0	0	0	0	0	58
23:00	2	43	0	0	0	0	0	0	0	0	0	0	0	45
Day Total	35	1595	211	0	7	3	0	1	0	0	0	0	0	1852
Percent	1.9%	86.1%	11.4%	0.0%	0.4%	0.2%	0.0%	0.1%	0.0%	0.0%	0.0%	0.0%	0.0%	
AM Peak	10:00	11:00	10:00		10:00									10:00
Vol.	7	167	27		1									199
PM Peak	13:00	16:00	12:00		19:00	12:00		17:00						12:00
Vol.	4	117	24		2	1		1						133

Location : Union Street South of
Location : Garden Street
City/State: Milford, NH
Counter : 16217
Southbound

Accurate Counts
978-664-2565

517840C3
Site Code: 51784003

Start Time	Bikes	Cars & Trailers	2 Axle Long	Buses	2 Axle 6 Tire	3 Axle Single	4 Axle Single	<5 Axl Double	5 Axle Double	>6 Axl Double	<6 Axl Multi	6 Axle Multi	>6 Axl Multi	Total
05/28/06	0	25	0	0	0	0	0	0	0	0	0	0	0	25
01:00	0	15	3	0	0	0	0	0	0	0	0	0	0	18
02:00	0	6	0	0	1	0	0	0	0	0	0	0	0	7
03:00	0	3	1	0	0	0	0	0	0	0	0	0	0	4
04:00	0	2	0	0	0	0	0	0	0	0	0	0	0	2
05:00	0	3	0	0	1	0	0	0	0	0	0	0	0	4
06:00	0	7	0	0	0	0	0	0	0	0	0	0	0	7
07:00	0	30	0	0	0	0	0	0	0	0	0	0	0	30
08:00	0	32	5	0	0	0	0	0	0	0	0	0	0	37
09:00	2	65	12	0	**2**	0	0	0	0	0	0	0	0	81
10:00	**3**	70	**14**	0	1	0	0	0	0	0	0	0	0	88
11:00	2	**95**	10	0	0	0	0	0	0	0	0	0	0	**107**
12 PM	1	**93**	**14**	0	0	0	0	0	0	0	0	0	0	**108**
13:00	3	74	9	0	0	0	0	0	0	0	0	0	0	86
14:00	1	86	7	0	0	0	0	0	0	0	0	0	0	94
15:00	2	90	12	0	**1**	**1**	0	**1**	0	0	0	0	0	107
16:00	2	80	11	0	0	0	0	0	0	0	0	0	0	93
17:00	3	82	10	0	0	0	0	0	0	0	0	0	0	95
18:00	3	74	6	0	0	0	0	0	0	0	0	0	0	83
19:00	4	83	8	0	0	0	0	0	0	0	0	**1**	0	96
20:00	3	53	9	0	0	0	0	0	0	0	0	0	0	65
21:00	2	31	3	0	1	0	0	0	0	0	0	0	0	37
22:00	2	16	2	0	0	0	0	0	0	0	0	0	0	20
23:00	**7**	33	2	0	0	0	0	0	0	0	0	0	0	42
Day Total	40	1148	138	0	7	1	0	1	0	0	0	1	0	1336
Percent	3.0%	85.9%	10.3%	0.0%	0.5%	0.1%	0.0%	0.1%	0.0%	0.0%	0.0%	0.1%	0.0%	
AM Peak	10:00	11:00	10:00		09:00									11:00
Vol.	3	95	14		2									107
PM Peak	23:00	12:00	12:00		15:00	15:00		15:00				19:00		12:00
Vol.	7	93	14		1	1		1				1		108

Location : Union Street South of
Location : Garden Street
City/State: Milford, NH
Counter : 16217

Accurate Counts
978-664-2565

517840C3
Site Code: 51784003

Southbound

Start Time	Bikes	Cars & Trailers	2 Axle Long	Buses	2 Axle 6 Tire	3 Axle Single	4 Axle Single	<5 Axl Double	5 Axle Double	>6 Axl Double	<6 Axl Multi	6 Axle Multi	>6 Axl Multi	Total
05/29/06	0	13	0	0	0	0	0	0	0	0	0	0	0	13
01:00	0	18	0	0	0	0	0	0	0	0	0	0	0	18
02:00	0	7	0	0	0	0	0	0	0	0	0	0	0	7
03:00	0	14	5	0	**1**	0	0	0	0	0	0	0	0	20
04:00	0	8	1	0	0	0	0	0	0	0	0	0	0	9
05:00	0	12	0	0	0	0	0	0	0	0	0	0	0	12
06:00	0	7	0	0	0	0	0	0	0	0	0	0	0	7
07:00	1	25	2	0	0	0	0	0	0	0	0	0	0	28
08:00	3	45	2	0	0	0	0	**1**	0	0	0	0	0	51
09:00	0	62	11	**1**	0	0	0	0	0	0	0	0	0	74
10:00	1	96	9	0	1	0	0	0	0	0	0	0	0	107
11:00	**5**	**165**	**17**	0	0	0	0	0	0	0	0	0	0	**187**
12 PM	0	79	8	0	1	0	0	0	0	0	0	0	0	88
13:00	1	81	10	0	**2**	0	0	0	0	0	0	0	0	94
14:00	0	73	**17**	0	2	0	0	0	0	0	0	0	0	92
15:00	1	71	8	0	1	0	0	0	0	0	0	0	0	81
16:00	2	83	11	0	0	0	0	0	0	0	0	0	0	96
17:00	4	78	8	0	0	0	0	0	0	0	0	0	0	90
18:00	1	**86**	16	0	0	0	0	0	0	0	0	0	0	**103**
19:00	**7**	73	9	0	0	0	0	0	0	0	0	0	0	89
20:00	1	64	11	0	1	0	0	0	0	0	0	0	0	77
21:00	3	58	2	0	0	0	0	0	0	0	0	0	0	63
22:00	0	26	5	0	0	**1**	0	0	0	0	0	0	0	32
23:00	0	23	0	0	0	0	0	0	0	0	0	0	0	23
Day Total	30	1267	152	1	9	1	0	1	0	0	0	0	0	1461
Percent	2.1%	86.7%	10.4%	0.1%	0.6%	0.1%	0.0%	0.1%	0.0%	0.0%	0.0%	0.0%	0.0%	
AM Peak	11:00	11:00	11:00	09:00	03:00			08:00						11:00
Vol.	5	165	17	1	1			1						187
PM Peak	19:00	18:00	14:00		13:00	22:00								18:00
Vol.	7	86	17		2	1								103

Location : Union Street South of
Location : Garden Street
City/State: Milford, NH
Counter : 16217

Accurate Counts
978-664-2565

517840C3
Site Code: 51784003

Southbound

Start Time	Bikes	Cars & Trailers	2 Axle Long	Buses	2 Axle 6 Tire	3 Axle Single	4 Axle Single	<5 Axl Double	5 Axle Double	>6 Axl Double	<6 Axl Multi	6 Axle Multi	>6 Axl Multi	Total
05/30/06	0	13	0	0	0	0	0	0	0	0	0	0	0	13
01:00	0	4	0	0	0	0	0	0	0	0	0	0	0	4
02:00	0	6	0	0	0	0	0	0	0	0	0	0	0	6
03:00	0	1	0	0	0	0	0	0	0	0	0	0	0	1
04:00	0	3	0	0	0	1	0	0	0	0	0	0	0	4
05:00	0	13	2	0	0	0	0	0	0	0	0	0	0	15
06:00	1	48	7	1	0	0	0	0	0	0	0	0	0	57
07:00	0	**157**	**28**	1	**2**	**2**	0	0	0	0	0	0	0	**190**
08:00	1	112	12	**12**	2	1	0	0	0	0	0	0	0	140
09:00	**4**	83	18	0	1	1	0	0	0	0	0	0	0	107
10:00	3	109	15	0	2	0	0	**2**	0	0	0	0	0	131
11:00	0	106	7	0	1	1	0	0	0	0	0	0	0	115
12 PM	0	108	23	0	2	1	0	**1**	0	0	0	0	0	135
13:00	0	90	15	**1**	**3**	1	0	0	0	0	0	0	0	110
14:00	3	156	24	1	2	1	0	1	0	0	0	0	0	188
15:00	2	147	27	0	2	0	0	0	0	0	0	0	0	178
16:00	**4**	153	22	0	1	**2**	0	0	0	0	0	0	0	182
17:00	4	**178**	**33**	0	1	1	0	0	0	0	0	0	0	**217**
18:00	1	130	27	0	0	1	0	0	0	0	0	0	0	159
19:00	1	131	15	1	0	0	0	1	0	0	0	0	0	149
20:00	1	96	6	0	0	0	0	0	0	0	0	0	0	103
21:00	1	49	7	0	0	0	0	0	0	0	0	0	0	57
22:00	1	29	1	0	0	0	0	0	0	0	0	0	0	31
23:00	0	11	1	0	0	0	0	0	0	0	0	0	0	12
Day Total	27	1933	290	17	19	13	0	5	0	0	0	0	0	2304
Percent	1.2%	83.9%	12.6%	0.7%	0.8%	0.6%	0.0%	0.2%	0.0%	0.0%	0.0%	0.0%	0.0%	
AM Peak	09:00	07:00	07:00	08:00	07:00	07:00		10:00						07:00
Vol.	4	157	28	12	2	2		2						190
PM Peak	16:00	17:00	17:00	13:00	13:00	16:00		12:00						17:00
Vol.	4	178	33	1	3	2		1						217

Location : Union Street South of
Location : Garden Street
City/State: Milford, NH
Counter : 16217

Accurate Counts
978-664-2565

517840C3
Site Code: 51784003

Southbound

Start Time	Bikes	Cars & Trailers	2 Axle Long	Buses	2 Axle 6 Tire	3 Axle Single	4 Axle Single	<5 Axl Double	5 Axle Double	>6 Axl Double	<6 Axl Multi	6 Axle Multi	>6 Axl Multi	Total
05/31/06	0	9	1	0	0	0	0	0	0	0	0	0	0	10
01:00	0	5	0	0	0	0	0	0	0	0	0	0	0	5
02:00	0	1	0	0	0	0	0	0	0	0	0	0	0	1
03:00	0	0	0	0	0	0	0	0	0	0	0	0	0	0
04:00	0	3	1	0	0	0	0	0	0	0	0	0	0	4
05:00	1	16	1	0	1	0	0	0	0	0	0	0	0	19
06:00	0	42	6	1	0	0	0	0	0	0	0	0	0	49
07:00	2	**175**	21	1	2	0	0	0	0	0	0	0	0	**201**
08:00	**3**	114	16	**14**	2	1	0	**1**	0	0	0	0	0	151
09:00	2	95	**22**	0	**4**	0	0	0	0	0	0	0	0	123
10:00	2	76	13	1	0	**2**	**1**	0	0	0	0	0	0	95
11:00	0	85	16	0	0	1	0	0	**1**	0	0	0	0	103
12 PM	0	107	16	0	0	1	0	0	0	0	0	0	0	124
13:00	0	135	15	0	**4**	**3**	0	0	**1**	0	0	0	0	158
14:00	2	201	26	**1**	1	1	0	**2**	0	0	0	0	0	234
15:00	3	**231**	32	0	2	1	0	1	0	0	0	0	0	**270**
16:00	3	151	**36**	0	1	0	0	0	1	0	0	0	0	192
17:00	3	172	35	0	2	0	0	0	0	0	0	0	0	212
18:00	3	151	22	0	1	0	0	0	0	0	0	0	0	177
19:00	**6**	125	25	0	1	0	0	0	0	0	**1**	0	0	158
20:00	5	102	10	0	0	0	0	0	0	0	0	0	0	117
21:00	5	82	9	0	0	0	0	0	0	0	0	0	0	96
22:00	1	32	2	0	0	0	0	0	0	0	0	0	0	35
23:00	0	18	1	0	0	0	0	0	0	0	0	0	0	19
Day Total	41	2128	326	18	21	10	1	4	3	0	1	0	0	2553
Percent	1.6%	83.4%	12.8%	0.7%	0.8%	0.4%	0.0%	0.2%	0.1%	0.0%	0.0%	0.0%	0.0%	
AM Peak	08:00	07:00	09:00	08:00	09:00	10:00	10:00	08:00	11:00					07:00
Vol.	3	175	22	14	4	2	1	1	1					201
PM Peak	19:00	15:00	16:00	14:00	13:00	13:00		14:00	13:00		19:00			15:00
Vol.	6	231	36	1	4	3		2	1		1			270

Location : Union Street South of
Location : Garden Street
City/State: Milford, NH
Counter : 16217

Accurate Counts
978-664-2565

517840C3
Site Code: 51784003

Southbound

Start Time	Bikes	Cars & Trailers	2 Axle Long	Buses	2 Axle 6 Tire	3 Axle Single	4 Axle Single	<5 Axl Double	5 Axle Double	>6 Axl Double	<6 Axl Multi	6 Axle Multi	>6 Axl Multi	Total
06/01/06	0	8	0	0	0	0	0	0	0	0	0	0	0	8
01:00	2	9	0	0	0	0	0	0	0	0	0	0	0	11
02:00	0	2	1	0	0	0	0	0	0	0	0	0	0	3
03:00	0	0	0	0	0	0	0	0	0	0	0	0	0	0
04:00	0	5	1	0	0	1	0	0	0	0	0	0	0	7
05:00	0	15	2	0	0	0	0	0	0	0	0	0	0	17
06:00	0	47	12	1	0	1	0	0	0	0	0	0	0	61
07:00	0	**163**	22	1	0	1	0	0	**1**	0	0	0	0	**188**
08:00	0	108	**27**	**12**	**3**	0	0	**2**	0	0	0	0	0	152
09:00	**3**	92	17	0	2	0	0	1	0	0	0	0	0	115
10:00	2	82	16	0	0	0	0	0	0	0	0	0	0	100
11:00	3	81	17	0	2	**2**	0	0	0	0	0	0	0	105
12 PM	1	108	11	0	2	0	0	**1**	0	0	0	0	0	123
13:00	2	126	9	0	1	**1**	0	1	0	0	0	0	0	140
14:00	1	**183**	20	1	3	0	0	0	0	0	0	0	0	208
15:00	1	147	13	0	0	0	0	0	0	0	0	0	0	161
16:00	4	160	16	0	0	0	0	0	0	0	0	0	0	180
17:00	2	183	21	0	0	0	0	0	0	0	0	0	0	206
18:00	36	160	17	0	0	0	0	0	0	0	0	0	0	**213**
19:00	**42**	130	16	0	0	1	0	1	0	0	0	0	0	190
20:00	6	103	18	**15**	**24**	0	0	0	0	0	0	0	0	166
21:00	1	35	**22**	5	12	1	0	0	0	0	0	0	0	76
22:00	2	21	7	1	7	0	0	0	0	0	0	0	0	38
23:00	1	16	3	0	5	0	0	0	0	0	0	0	0	25
Day Total	109	1984	288	36	61	8	0	6	1	0	0	0	0	2493
Percent	4.4%	79.6%	11.6%	1.4%	2.4%	0.3%	0.0%	0.2%	0.0%	0.0%	0.0%	0.0%	0.0%	
AM Peak	09:00	07:00	08:00	08:00	08:00	11:00		08:00	07:00					07:00
Vol.	3	163	27	12	3	2		2	1					188
PM Peak	19:00	14:00	21:00	20:00	20:00	13:00		12:00						18:00
Vol.	42	183	22	15	24	1		1						213

Location : Union Street South of
Location : Garden Street
City/State: Milford, NH
Counter : 16217
Southbound

Accurate Counts
978-664-2565

517840C3
Site Code: 51784003

Start Time	Bikes	Cars & Trailers	2 Axle Long	Buses	2 Axle 6 Tire	3 Axle Single	4 Axle Single	<5 Axl Double	5 Axle Double	>6 Axl Double	<6 Axl Multi	6 Axle Multi	>6 Axl Multi	Total
06/02/06	0	12	5	0	3	0	0	0	0	0	0	0	0	20
01:00	0	5	0	0	0	0	0	0	0	0	0	0	0	5
02:00	1	3	0	0	1	0	0	0	0	0	0	0	0	5
03:00	0	2	0	0	0	0	0	0	0	0	0	0	0	2
04:00	0	3	0	0	0	0	0	0	0	0	0	0	0	3
05:00	0	9	2	0	0	0	0	0	0	0	0	0	0	11
06:00	2	31	4	3	7	0	0	0	0	0	0	0	0	47
07:00	**4**	130	34	1	**10**	0	0	0	0	0	0	0	0	179
08:00	1	130	18	**5**	3	**1**	0	0	0	0	0	0	0	158
09:00	4	199	36	4	4	0	0	0	0	0	0	0	0	247
10:00	2	160	29	2	2	0	0	0	0	0	0	0	0	195
11:00	4	**204**	**37**	4	4	0	0	0	0	0	0	0	0	**253**
12 PM	**4**	222	40	**4**	**4**	0	0	0	0	0	0	0	0	274
13:00	3	194	35	3	3	0	0	0	0	0	0	0	0	238
14:00	4	**298**	**54**	4	4	0	0	0	0	0	0	0	0	**364**
15:00	4	281	52	4	4	0	0	0	0	0	0	0	0	345
16:00	4	281	51	4	4	0	0	0	0	0	0	0	0	344
17:00	4	263	48	4	4	0	0	0	0	0	0	0	0	323
18:00	3	195	35	3	3	0	0	0	0	0	0	0	0	239
19:00	1	146	27	1	1	0	0	0	0	0	0	0	0	176
20:00	0	112	20	0	0	0	0	0	0	0	0	0	0	132
21:00	0	74	14	0	0	0	0	0	0	0	0	0	0	88
22:00	0	61	11	0	0	0	0	0	0	0	0	0	0	72
23:00	0	71	14	0	0	0	0	0	0	0	0	0	0	85
Day Total	45	3086	566	46	61	1	0	0	0	0	0	0	0	3805
Percent	1.2%	81.1%	14.9%	1.2%	1.6%	0.0%	0.0%	0.0%	0.0%	0.0%	0.0%	0.0%	0.0%	
AM Peak	07:00	11:00	11:00	08:00	07:00	08:00								11:00
Vol.	4	204	37	5	10	1								253
PM Peak	12:00	14:00	14:00	12:00	12:00									14:00
Vol.	4	298	54	4	4									364

Location : Union Street South of
Location : Garden Street
City/State: Milford, NH
Counter : 16217
Southbound

Accurate Counts
978-664-2565

517840C3
Site Code: 51784003

Start Time	Bikes	Cars & Trailers	2 Axle Long	Buses	2 Axle 6 Tire	3 Axle Single	4 Axle Single	<5 Axl Double	5 Axle Double	>6 Axl Double	<6 Axl Multi	6 Axle Multi	>6 Axl Multi	Total
06/03/06	0	27	5	0	0	0	0	0	0	0	0	0	0	32
01:00	0	22	4	0	0	0	0	0	0	0	0	0	0	26
02:00	0	15	3	0	0	0	0	0	0	0	0	0	0	18
03:00	0	10	2	0	0	0	0	0	0	0	0	0	0	12
04:00	0	7	1	0	0	0	0	0	0	0	0	0	0	8
05:00	0	22	3	0	0	0	0	0	0	0	0	0	0	25
06:00	0	35	7	0	0	0	0	0	0	0	0	0	0	42
07:00	0	89	16	0	0	0	0	0	0	0	0	0	0	105
08:00	0	129	24	0	0	0	0	0	0	0	0	0	0	153
09:00	3	197	36	3	3	0	0	0	0	0	0	0	0	242
10:00	**4**	238	43	**4**	**4**	0	0	0	0	0	0	0	0	293
11:00	4	**255**	**47**	4	4	0	0	0	0	0	0	0	0	**314**
12 PM	**4**	**241**	**44**	**4**	**4**	0	0	0	0	0	0	0	0	**297**
13:00	4	191	36	4	4	0	0	0	0	0	0	0	0	239
14:00	0	138	25	0	0	0	0	0	0	0	0	0	0	163
15:00	4	185	34	4	4	0	0	0	0	0	0	0	0	231
16:00	0	139	26	0	0	0	0	0	0	0	0	0	0	165
17:00	1	143	26	1	1	0	0	0	0	0	0	0	0	172
18:00	0	141	26	0	0	0	0	0	0	0	0	0	0	167
19:00	0	105	18	0	0	0	0	0	0	0	0	0	0	123
20:00	0	99	18	0	0	0	0	0	0	0	0	0	0	117
21:00	0	92	17	0	0	0	0	0	0	0	0	0	0	109
22:00	0	64	12	0	0	0	0	0	0	0	0	0	0	76
23:00	0	34	6	0	0	0	0	0	0	0	0	0	0	40
Day Total	24	2618	479	24	24	0	0	0	0	0	0	0	0	3169
Percent	0.8%	82.6%	15.1%	0.8%	0.8%	0.0%	0.0%	0.0%	0.0%	0.0%	0.0%	0.0%	0.0%	
AM Peak	10:00	11:00	11:00	10:00	10:00									11:00
Vol.	4	255	47	4	4									314
PM Peak	12:00	12:00	12:00	12:00	12:00									12:00
Vol.	4	241	44	4	4									297

Location : Union Street South of
Location : Garden Street
City/State: Milford, NH
Counter : 16217
Southbound

Accurate Counts
978-664-2565

517840C3
Site Code: 51784003

Start Time	Bikes	Cars & Trailers	2 Axle Long	Buses	2 Axle 6 Tire	3 Axle Single	4 Axle Single	<5 Axl Double	5 Axle Double	>6 Axl Double	<6 Axl Multi	6 Axle Multi	>6 Axl Multi	Total
06/04/06	0	31	6	0	0	0	0	0	0	0	0	0	0	37
01:00	0	16	3	0	0	0	0	0	0	0	0	0	0	19
02:00	0	12	2	0	0	0	0	0	0	0	0	0	0	14
03:00	0	6	0	0	0	0	0	0	0	0	0	0	0	6
04:00	0	5	0	0	0	0	0	0	0	0	0	0	0	5
05:00	0	14	2	0	0	0	0	0	0	0	0	0	0	16
06:00	0	34	7	0	0	0	0	0	0	0	0	0	0	41
07:00	0	59	11	0	0	0	0	0	0	0	0	0	0	70
08:00	0	100	19	0	0	0	0	0	0	0	0	0	0	119
09:00	**1**	**152**	**28**	**1**	**1**	0	0	0	0	0	0	0	0	**183**
10:00	1	151	27	1	1	0	0	0	0	0	0	0	0	181
11:00	1	149	27	1	1	0	0	0	0	0	0	0	0	179
12 PM	**3**	192	**37**	**3**	**3**	0	0	0	0	0	0	0	0	238
13:00	3	**194**	36	3	3	0	0	0	0	0	0	0	0	**239**
14:00	2	161	29	2	2	0	0	0	0	0	0	0	0	196
15:00	2	163	30	2	2	0	0	0	0	0	0	0	0	199
16:00	1	159	29	1	1	0	0	0	0	0	0	0	0	191
17:00	1	156	29	1	1	0	0	0	0	0	0	0	0	188
18:00	0	132	24	0	0	0	0	0	0	0	0	0	0	156
19:00	0	132	23	0	0	0	0	0	0	0	0	0	0	155
20:00	0	104	19	0	0	0	0	0	0	0	0	0	0	123
21:00	0	70	13	0	0	0	0	0	0	0	0	0	0	83
22:00	0	39	8	0	0	0	0	0	0	0	0	0	0	47
23:00	0	29	6	0	0	0	0	0	0	0	0	0	0	35
Day Total	15	2260	415	15	15	0	0	0	0	0	0	0	0	2720
Percent	0.6%	83.1%	15.3%	0.6%	0.6%	0.0%	0.0%	0.0%	0.0%	0.0%	0.0%	0.0%	0.0%	
AM Peak	09:00	09:00	09:00	09:00	09:00									09:00
Vol.	1	152	28	1	1									183
PM Peak	12:00	13:00	12:00	12:00	12:00									13:00
Vol.	3	194	37	3	3									239

Location : Union Street South of
Location : Garden Street
City/State: Milford, NH
Counter : 16217
Southbound

Accurate Counts
978-664-2565

517840C3
Site Code: 51784003

Start Time	Bikes	Cars & Trailers	2 Axle Long	Buses	2 Axle 6 Tire	3 Axle Single	4 Axle Single	<5 Axl Double	5 Axle Double	>6 Axl Double	<6 Axl Multi	6 Axle Multi	>6 Axl Multi	Total
06/05/06	0	17	3	0	0	0	0	0	0	0	0	0	0	20
01:00	0	6	1	0	0	0	0	0	0	0	0	0	0	7
02:00	0	3	0	0	0	0	0	0	0	0	0	0	0	3
03:00	0	9	2	0	0	0	0	0	0	0	0	0	0	11
04:00	0	10	1	0	0	0	0	0	0	0	0	0	0	11
05:00	0	**33**	**6**	0	0	0	0	0	0	0	0	0	0	**39**
06:00	*	*	*	*	*	*	*	*	*	*	*	*	*	*
07:00	*	*	*	*	*	*	*	*	*	*	*	*	*	*
08:00	*	*	*	*	*	*	*	*	*	*	*	*	*	*
09:00	*	*	*	*	*	*	*	*	*	*	*	*	*	*
10:00	*	*	*	*	*	*	*	*	*	*	*	*	*	*
11:00	*	*	*	*	*	*	*	*	*	*	*	*	*	*
12 PM	*	*	*	*	*	*	*	*	*	*	*	*	*	*
13:00	*	*	*	*	*	*	*	*	*	*	*	*	*	*
14:00	*	*	*	*	*	*	*	*	*	*	*	*	*	*
15:00	*	*	*	*	*	*	*	*	*	*	*	*	*	*
16:00	*	*	*	*	*	*	*	*	*	*	*	*	*	*
17:00	*	*	*	*	*	*	*	*	*	*	*	*	*	*
18:00	*	*	*	*	*	*	*	*	*	*	*	*	*	*
19:00	*	*	*	*	*	*	*	*	*	*	*	*	*	*
20:00	*	*	*	*	*	*	*	*	*	*	*	*	*	*
21:00	*	*	*	*	*	*	*	*	*	*	*	*	*	*
22:00	*	*	*	*	*	*	*	*	*	*	*	*	*	*
23:00	*	*	*	*	*	*	*	*	*	*	*	*	*	*
Day Total	0	78	13	0	0	0	0	0	0	0	0	0	0	91
Percent	0.0%	85.7%	14.3%	0.0%	0.0%	0.0%	0.0%	0.0%	0.0%	0.0%	0.0%	0.0%	0.0%	
AM Peak		05:00	05:00											05:00
Vol.		33	6											39
PM Peak Vol.														
Grand Total	647	34161	4999	264	312	120	2	48	18	23	1	1	1	40597
Percent	1.6%	84.1%	12.3%	0.7%	0.8%	0.3%	0.0%	0.1%	0.0%	0.1%	0.0%	0.0%	0.0%	

Location : Union Street South of
Location : Garden Street
City/State: Milford, NH
Counter : 16217
Northbound

Accurate Counts
978-664-2565

517840C3
Site Code: 51784003

Start Time	Bikes	Cars & Trailers	2 Axle Long	Buses	2 Axle 6 Tire	3 Axle Single	4 Axle Single	<5 Axl Double	5 Axle Double	>6 Axl Double	<6 Axl Multi	6 Axle Multi	>6 Axl Multi	Total
05/18/06	*	*	*	*	*	*	*	*	*	*	*	*	*	*
01:00	*	*	*	*	*	*	*	*	*	*	*	*	*	*
02:00	*	*	*	*	*	*	*	*	*	*	*	*	*	*
03:00	*	*	*	*	*	*	*	*	*	*	*	*	*	*
04:00	*	*	*	*	*	*	*	*	*	*	*	*	*	*
05:00	*	*	*	*	*	*	*	*	*	*	*	*	*	*
06:00	*	*	*	*	*	*	*	*	*	*	*	*	*	*
07:00	*	*	*	*	*	*	*	*	*	*	*	*	*	*
08:00	*	*	*	*	*	*	*	*	*	*	*	*	*	*
09:00	*	*	*	*	*	*	*	*	*	*	*	*	*	*
10:00	**1**	70	**21**	0	**4**	0	0	**4**	0	0	0	0	0	**100**
11:00	0	**76**	11	0	3	**2**	0	2	0	**1**	0	0	0	95
12 PM	0	93	31	1	2	0	0	0	0	0	0	0	0	127
13:00	0	93	22	1	2	0	0	1	0	0	0	0	0	119
14:00	0	166	29	**3**	**7**	0	0	0	0	0	0	0	0	205
15:00	1	123	26	3	4	**1**	0	**2**	0	0	0	0	0	160
16:00	0	140	**45**	0	3	0	0	0	0	0	0	0	0	188
17:00	0	**179**	35	0	1	0	0	1	0	0	0	0	0	**216**
18:00	0	121	22	1	1	0	0	0	0	0	0	0	0	145
19:00	**2**	119	15	0	0	0	0	0	**1**	0	0	0	0	137
20:00	1	77	15	1	0	0	0	0	0	0	0	0	0	94
21:00	0	33	6	0	2	0	0	0	0	0	0	0	0	41
22:00	0	31	4	0	0	0	0	0	0	0	0	0	0	35
23:00	0	14	2	0	0	0	0	0	0	0	0	0	0	16
Day Total	5	1335	284	10	29	3	0	10	1	1	0	0	0	1678
Percent	0.3%	79.6%	16.9%	0.6%	1.7%	0.2%	0.0%	0.6%	0.1%	0.1%	0.0%	0.0%	0.0%	
AM Peak	10:00	11:00	10:00		10:00	11:00		10:00		11:00				10:00
Vol.	1	76	21		4	2		4		1				100
PM Peak	19:00	17:00	16:00	14:00	14:00	15:00		15:00	19:00					17:00
Vol.	2	179	45	3	7	1		2	1					216

Location : Union Street South of
Location : Garden Street
City/State: Milford, NH
Counter : 16217
Northbound

Accurate Counts
978-664-2565

517840C3
Site Code: 51784003

Start Time	Bikes	Cars & Trailers	2 Axle Long	Buses	2 Axle 6 Tire	3 Axle Single	4 Axle Single	<5 Axl Double	5 Axle Double	>6 Axl Double	<6 Axl Multi	6 Axle Multi	>6 Axl Multi	Total
05/19/06	0	9	0	0	0	0	0	0	0	0	0	0	0	9
01:00	0	5	0	0	0	0	0	0	0	0	0	0	0	5
02:00	0	2	0	0	0	0	0	0	0	0	0	0	0	2
03:00	0	5	1	0	0	0	0	0	0	0	0	0	0	6
04:00	0	6	2	0	0	0	0	0	0	0	0	0	0	8
05:00	0	19	12	0	0	0	0	0	0	0	0	0	0	31
06:00	0	61	29	0	1	0	0	0	0	0	0	0	0	91
07:00	1	115	**32**	**5**	4	**2**	0	0	0	0	0	0	0	**159**
08:00	**2**	**117**	29	3	**5**	1	0	**1**	0	0	0	0	0	158
09:00	0	85	25	0	4	0	0	0	0	0	0	0	0	114
10:00	0	81	18	0	5	0	0	1	0	0	0	0	0	105
11:00	1	77	22	0	3	0	0	1	0	0	0	0	0	104
12 PM	**1**	97	29	0	**7**	0	0	0	**1**	0	0	0	0	135
13:00	0	105	20	0	4	0	0	0	0	0	0	0	0	129
14:00	1	**177**	**37**	0	5	0	0	0	0	0	0	0	0	**220**
15:00	0	120	22	**5**	4	0	0	**1**	0	0	0	0	0	152
16:00	0	141	30	0	1	0	0	1	0	0	0	0	0	173
17:00	0	163	34	0	5	0	0	0	0	0	0	0	0	202
18:00	0	125	25	0	1	0	0	1	0	0	0	0	0	152
19:00	0	89	14	0	1	0	0	0	1	0	0	0	0	105
20:00	0	59	12	0	0	0	0	0	0	0	0	0	0	71
21:00	0	49	5	0	1	0	0	0	0	0	0	0	0	55
22:00	0	53	11	0	0	0	0	0	0	0	0	0	0	64
23:00	0	29	1	0	1	0	0	0	0	0	0	0	0	31
Day Total	6	1789	410	13	52	3	0	6	2	0	0	0	0	2281
Percent	0.3%	78.4%	18.0%	0.6%	2.3%	0.1%	0.0%	0.3%	0.1%	0.0%	0.0%	0.0%	0.0%	
AM Peak	08:00	08:00	07:00	07:00	08:00	07:00		08:00						07:00
Vol.	2	117	32	5	5	2		1						159
PM Peak	12:00	14:00	14:00	15:00	12:00			15:00	12:00					14:00
Vol.	1	177	37	5	7			1	1					220

Location : Union Street South of
Location : Garden Street
City/State: Milford, NH
Counter : 16217
Northbound

Accurate Counts
978-664-2565

517840C3
Site Code: 51784003

Start Time	Bikes	Cars & Trailers	2 Axle Long	Buses	2 Axle 6 Tire	3 Axle Single	4 Axle Single	<5 Axl Double	5 Axle Double	>6 Axl Double	<6 Axl Multi	6 Axle Multi	>6 Axl Multi	Total
05/20/06	0	13	1	0	0	0	0	0	0	0	0	0	0	14
01:00	0	7	3	0	0	0	0	0	0	0	0	0	0	10
02:00	0	4	0	0	0	0	0	0	0	0	0	0	0	4
03:00	0	4	0	0	0	0	0	0	0	0	0	0	0	4
04:00	0	5	3	0	0	0	0	0	0	0	0	0	0	8
05:00	0	12	5	0	1	0	0	0	0	0	0	0	0	18
06:00	0	29	17	0	1	**1**	0	0	0	0	0	0	0	48
07:00	0	91	34	0	1	0	0	0	0	0	0	0	0	126
08:00	**3**	135	24	0	2	1	0	0	0	0	0	0	0	165
09:00	2	**176**	32	0	1	1	0	0	0	0	0	0	0	**212**
10:00	0	156	**48**	0	**7**	0	0	0	0	0	0	0	0	211
11:00	1	168	33	0	3	0	0	**2**	0	0	0	0	0	207
12 PM	0	135	**37**	0	0	0	0	0	0	0	0	0	0	172
13:00	**1**	**154**	31	0	1	0	0	0	0	0	0	0	0	**187**
14:00	0	119	32	0	**2**	0	0	0	0	0	0	0	0	153
15:00	0	122	25	0	1	0	0	0	0	0	0	0	0	148
16:00	1	113	20	0	1	0	0	**1**	0	0	0	0	0	136
17:00	0	88	18	**1**	1	0	0	0	0	0	0	0	0	108
18:00	0	99	15	0	1	0	0	0	0	0	0	0	0	115
19:00	0	61	9	0	1	0	0	0	0	0	0	0	0	71
20:00	0	50	12	0	0	0	0	0	0	0	0	0	0	62
21:00	0	46	4	0	0	0	0	0	0	0	0	0	0	50
22:00	0	35	5	0	2	0	0	0	0	0	0	0	0	42
23:00	0	22	3	0	0	0	0	0	0	0	0	0	0	25
Day Total	8	1844	411	1	26	3	0	3	0	0	0	0	0	2296
Percent	0.3%	80.3%	17.9%	0.0%	1.1%	0.1%	0.0%	0.1%	0.0%	0.0%	0.0%	0.0%	0.0%	
AM Peak	08:00	09:00	10:00		10:00	06:00		11:00						09:00
Vol.	3	176	48		7	1		2						212
PM Peak	13:00	13:00	12:00	17:00	14:00			16:00						13:00
Vol.	1	154	37	1	2			1						187

Location : Union Street South of
Location : Garden Street
City/State: Milford, NH
Counter : 16217
Northbound

Accurate Counts
978-664-2565

517840C3
Site Code: 51784003

Start Time	Bikes	Cars & Trailers	2 Axle Long	Buses	2 Axle 6 Tire	3 Axle Single	4 Axle Single	<5 Axl Double	5 Axle Double	>6 Axl Double	<6 Axl Multi	6 Axle Multi	>6 Axl Multi	Total
05/21/06	0	19	2	0	0	0	0	0	0	0	0	0	0	21
01:00	0	14	0	0	1	0	0	0	0	0	0	0	0	15
02:00	0	9	1	0	0	0	0	0	0	0	0	0	0	10
03:00	0	5	0	0	0	0	0	0	0	0	0	0	0	5
04:00	0	6	0	0	0	0	0	0	0	0	0	0	0	6
05:00	0	9	4	0	0	0	0	0	0	0	0	0	0	13
06:00	0	25	9	0	0	0	0	0	0	0	0	0	0	34
07:00	0	40	11	0	0	0	0	0	0	0	0	0	0	51
08:00	0	76	22	0	0	0	0	0	0	0	0	0	0	98
09:00	0	117	**25**	0	**2**	0	0	0	0	0	0	0	0	**144**
10:00	0	**118**	22	0	1	0	0	0	0	0	0	0	0	141
11:00	**2**	100	23	0	2	0	0	**1**	0	0	0	0	0	128
12 PM	0	104	13	0	**2**	0	0	0	0	0	0	0	0	119
13:00	0	**108**	18	0	1	0	0	0	0	0	0	0	0	**127**
14:00	0	76	12	0	0	0	0	**1**	0	0	0	0	0	89
15:00	0	91	**23**	0	2	0	0	0	0	0	0	0	0	116
16:00	0	61	16	0	1	0	0	0	0	0	0	0	0	78
17:00	0	101	16	0	0	0	0	0	0	0	0	0	0	117
18:00	0	74	20	0	1	**1**	0	0	0	0	0	0	0	96
19:00	**1**	54	12	0	0	0	0	0	0	0	0	0	0	67
20:00	0	52	4	0	1	0	0	0	0	0	0	0	0	57
21:00	0	36	5	0	0	0	0	0	0	0	0	0	0	41
22:00	0	18	1	0	0	0	0	0	0	0	0	0	0	19
23:00	0	14	2	0	0	0	0	0	0	0	0	0	0	16
Day Total	3	1327	261	0	14	1	0	2	0	0	0	0	0	1608
Percent	0.2%	82.5%	16.2%	0.0%	0.9%	0.1%	0.0%	0.1%	0.0%	0.0%	0.0%	0.0%	0.0%	
AM Peak	11:00	10:00	09:00		09:00			11:00						09:00
Vol.	2	118	25		2			1						144
PM Peak	19:00	13:00	15:00		12:00	18:00		14:00						13:00
Vol.	1	108	23		2	1		1						127

Location : Union Street South of
Location : Garden Street
City/State: Milford, NH
Counter : 16217

Accurate Counts
978-664-2565

517840C3
Site Code: 51784003

Northbound

Start Time	Bikes	Cars & Trailers	2 Axle Long	Buses	2 Axle 6 Tire	3 Axle Single	4 Axle Single	<5 Axl Double	5 Axle Double	>6 Axl Double	<6 Axl Multi	6 Axle Multi	>6 Axl Multi	Total
05/22/06	0	5	0	0	0	0	0	0	0	0	0	0	0	5
01:00	0	6	4	0	1	0	0	0	0	0	0	0	0	11
02:00	0	1	1	0	0	0	0	0	0	0	0	0	0	2
03:00	0	6	1	0	0	0	0	0	0	0	0	0	0	7
04:00	0	6	3	0	1	0	0	0	0	0	0	0	0	10
05:00	0	21	11	0	0	0	0	0	**1**	0	0	0	0	33
06:00	**1**	54	24	0	3	0	0	0	1	0	0	0	0	83
07:00	1	**130**	**34**	2	4	**1**	0	0	0	0	0	0	0	**172**
08:00	0	118	30	**6**	**6**	0	0	0	0	**1**	0	0	0	161
09:00	0	75	23	0	5	1	0	**1**	0	0	0	0	0	105
10:00	0	81	22	0	1	0	0	0	1	1	0	0	0	106
11:00	1	104	20	0	4	0	0	1	0	0	0	0	0	130
12 PM	**1**	106	29	0	**4**	0	0	0	0	0	0	0	0	140
13:00	0	94	16	0	4	0	0	0	0	**1**	0	0	0	115
14:00	0	115	**33**	**3**	3	**3**	0	**1**	0	0	0	0	0	158
15:00	0	144	27	3	0	0	0	0	**1**	0	0	0	0	175
16:00	0	150	33	1	3	0	0	0	0	1	0	0	0	188
17:00	0	**160**	30	0	2	0	0	1	0	0	0	0	0	**193**
18:00	1	133	23	0	2	0	0	0	1	0	0	0	0	160
19:00	0	90	17	1	0	0	0	0	0	0	0	0	0	108
20:00	0	49	8	0	1	0	0	0	0	0	0	0	0	58
21:00	0	35	3	0	1	0	0	0	0	0	0	0	0	39
22:00	1	19	2	0	0	0	0	0	0	0	0	0	0	22
23:00	0	13	0	0	0	0	0	0	0	0	0	0	0	13
Day Total	6	1715	394	16	45	5	0	4	5	4	0	0	0	2194
Percent	0.3%	78.2%	18.0%	0.7%	2.1%	0.2%	0.0%	0.2%	0.2%	0.2%	0.0%	0.0%	0.0%	
AM Peak	06:00	07:00	07:00	08:00	08:00	07:00		09:00	05:00	08:00				07:00
Vol.	1	130	34	6	6	1		1	1	1				172
PM Peak	12:00	17:00	14:00	14:00	12:00	14:00		14:00	15:00	13:00				17:00
Vol.	1	160	33	3	4	3		1	1	1				193

Location : Union Street South of
Location : Garden Street
City/State: Milford, NH
Counter : 16217

Accurate Counts
978-664-2565

517840C3
Site Code: 51784003

Northbound

Start Time	Bikes	Cars & Trailers	2 Axle Long	Buses	2 Axle 6 Tire	3 Axle Single	4 Axle Single	<5 Axl Double	5 Axle Double	>6 Axl Double	<6 Axl Multi	6 Axle Multi	>6 Axl Multi	Total
05/23/06	0	2	4	0	0	0	0	0	0	0	0	0	0	6
01:00	0	3	0	0	0	0	0	0	0	0	0	0	0	3
02:00	0	2	0	0	0	0	0	0	0	0	0	0	0	2
03:00	0	4	1	0	0	0	0	0	0	0	0	0	0	5
04:00	0	7	4	0	0	0	0	0	0	0	0	0	0	11
05:00	0	19	8	0	0	0	0	0	0	0	0	0	0	27
06:00	0	67	23	0	3	0	0	0	0	0	0	0	0	93
07:00	**1**	128	**35**	3	**6**	0	0	**1**	0	**1**	0	0	0	175
08:00	0	**140**	29	**6**	5	**1**	0	1	0	0	0	0	0	**182**
09:00	1	105	28	0	4	0	0	1	0	0	0	0	0	139
10:00	0	91	21	0	3	1	0	0	0	0	0	0	0	116
11:00	0	81	23	0	2	0	0	0	0	0	0	0	0	106
12 PM	0	101	16	0	2	3	0	1	0	0	0	0	0	123
13:00	0	117	20	0	3	1	0	**3**	0	0	0	0	0	144
14:00	0	162	28	**4**	6	**4**	0	0	0	0	0	0	0	204
15:00	0	161	**38**	4	**8**	2	0	1	0	**1**	0	0	0	215
16:00	**1**	153	35	4	7	2	0	0	0	0	0	0	0	202
17:00	1	**177**	33	0	3	2	0	0	0	0	0	0	0	**216**
18:00	0	144	24	0	4	1	0	0	0	0	0	0	0	173
19:00	0	98	22	0	1	1	0	0	0	1	0	0	0	123
20:00	0	92	13	0	4	0	0	0	**1**	0	0	0	0	110
21:00	0	22	3	0	0	0	0	0	0	0	0	0	0	25
22:00	0	27	2	0	0	0	0	0	0	0	0	0	0	29
23:00	0	10	4	0	0	0	0	0	0	0	0	0	0	14
Day Total	4	1913	414	21	61	18	0	8	1	3	0	0	0	2443
Percent	0.2%	78.3%	16.9%	0.9%	2.5%	0.7%	0.0%	0.3%	0.0%	0.1%	0.0%	0.0%	0.0%	
AM Peak	07:00	08:00	07:00	08:00	07:00	08:00		07:00		07:00				08:00
Vol.	1	140	35	6	6	1		1		1				182
PM Peak	16:00	17:00	15:00	14:00	15:00	14:00		13:00	20:00	15:00				17:00
Vol.	1	177	38	4	8	4		3	1	1				216

Location : Union Street South of
Location : Garden Street
City/State: Milford, NH
Counter : 16217
Northbound

Accurate Counts
978-664-2565

517840C3
Site Code: 51784003

Start Time	Bikes	Cars & Trailers	2 Axle Long	Buses	2 Axle 6 Tire	3 Axle Single	4 Axle Single	<5 Axl Double	5 Axle Double	>6 Axl Double	<6 Axl Multi	6 Axle Multi	>6 Axl Multi	Total
05/24/06	0	7	0	0	0	0	0	0	0	0	0	0	0	7
01:00	0	6	0	0	0	0	0	0	0	0	0	0	0	6
02:00	0	0	0	0	0	0	0	0	0	0	0	0	0	0
03:00	0	4	1	0	0	0	0	0	0	0	0	0	0	5
04:00	0	5	4	0	0	0	0	0	0	0	0	0	0	9
05:00	0	23	10	0	0	0	0	0	0	0	0	0	0	33
06:00	0	64	22	0	2	0	0	1	0	0	0	0	0	89
07:00	1	**140**	23	1	**8**	1	0	0	0	0	0	0	0	**174**
08:00	**2**	124	25	**6**	7	1	**1**	**2**	0	**1**	0	0	0	169
09:00	0	75	**27**	0	3	1	0	0	0	0	0	0	0	106
10:00	0	88	14	0	2	**2**	1	1	0	0	0	0	0	108
11:00	0	95	15	1	4	0	0	0	0	1	0	0	0	116
12 PM	0	82	28	0	**4**	0	0	**1**	0	0	0	0	0	115
13:00	0	98	29	1	2	0	0	0	0	0	0	0	0	130
14:00	0	157	26	3	1	0	0	0	0	**1**	0	0	0	188
15:00	0	143	**36**	**6**	3	0	0	0	0	0	0	0	0	188
16:00	2	153	25	0	3	**1**	0	0	0	0	0	0	0	184
17:00	0	**161**	27	0	4	0	0	1	0	1	0	0	0	**194**
18:00	**6**	103	18	1	2	1	0	0	0	0	0	0	0	131
19:00	0	101	23	0	1	0	0	0	0	0	0	0	0	125
20:00	0	77	13	0	0	0	0	0	0	0	0	0	0	90
21:00	0	33	6	0	0	0	0	1	0	0	0	0	0	40
22:00	1	25	2	0	0	0	0	0	0	0	0	0	0	28
23:00	0	12	2	0	0	0	0	0	0	0	0	0	0	14
Day Total	12	1776	376	19	46	7	2	7	0	4	0	0	0	2249
Percent	0.5%	79.0%	16.7%	0.8%	2.0%	0.3%	0.1%	0.3%	0.0%	0.2%	0.0%	0.0%	0.0%	
AM Peak	08:00	07:00	09:00	08:00	07:00	10:00	08:00	08:00		08:00				07:00
Vol.	2	140	27	6	8	2	1	2		1				174
PM Peak	18:00	17:00	15:00	15:00	12:00	16:00		12:00		14:00				17:00
Vol.	6	161	36	6	4	1		1		1				194

Location : Union Street South of
Location : Garden Street
City/State: Milford, NH
Counter : 16217
Northbound

Accurate Counts
978-664-2565

517840C3
Site Code: 51784003

Start Time	Bikes	Cars & Trailers	2 Axle Long	Buses	2 Axle 6 Tire	3 Axle Single	4 Axle Single	<5 Axl Double	5 Axle Double	>6 Axl Double	<6 Axl Multi	6 Axle Multi	>6 Axl Multi	Total
05/25/06	0	8	0	0	0	0	0	0	0	0	0	0	0	8
01:00	0	3	0	0	0	0	0	0	0	0	0	0	0	3
02:00	0	4	0	0	0	0	0	0	0	0	0	0	0	4
03:00	0	7	0	0	0	0	0	0	0	0	0	0	0	7
04:00	**1**	6	4	0	0	0	0	0	0	0	0	0	0	11
05:00	0	20	12	0	1	0	0	0	0	0	0	0	0	33
06:00	0	59	26	0	1	0	0	0	0	0	0	0	0	86
07:00	0	**132**	**34**	1	5	**2**	0	0	0	0	0	0	0	**174**
08:00	0	121	27	**7**	**7**	0	0	0	0	0	0	0	0	162
09:00	0	105	22	0	1	2	0	0	0	0	0	0	0	130
10:00	0	73	17	0	4	0	0	0	0	0	0	0	0	94
11:00	0	86	19	0	1	2	0	0	0	0	0	0	0	108
12 PM	0	90	29	0	2	**1**	0	**1**	0	0	0	0	0	123
13:00	**1**	90	16	0	3	1	0	0	0	0	0	0	0	111
14:00	0	150	35	2	2	1	0	1	0	0	0	0	0	191
15:00	0	136	26	**4**	2	0	0	1	0	0	0	0	0	169
16:00	1	188	40	1	**6**	0	0	0	0	0	0	0	0	236
17:00	1	**249**	**45**	0	3	0	0	0	0	0	0	0	0	**298**
18:00	1	136	26	1	1	0	0	0	0	0	0	0	0	165
19:00	0	138	24	0	1	0	0	0	0	0	0	0	0	163
20:00	0	82	12	0	0	0	0	0	0	0	0	0	0	94
21:00	1	51	9	0	0	0	0	0	0	0	0	0	0	61
22:00	0	22	4	0	1	0	0	0	0	0	0	0	0	27
23:00	0	27	0	0	0	0	0	0	0	0	0	0	0	27
Day Total	6	1983	427	16	41	9	0	3	0	0	0	0	0	2485
Percent	0.2%	79.8%	17.2%	0.6%	1.6%	0.4%	0.0%	0.1%	0.0%	0.0%	0.0%	0.0%	0.0%	
AM Peak	04:00	07:00	07:00	08:00	08:00	07:00								07:00
Vol.	1	132	34	7	7	2								174
PM Peak	13:00	17:00	17:00	15:00	16:00	12:00		12:00						17:00
Vol.	1	249	45	4	6	1		1						298

Location : Union Street South of
Location : Garden Street
City/State: Milford, NH
Counter : 16217
Northbound

Accurate Counts
978-664-2565

517840C3
Site Code: 51784003

Start Time	Bikes	Cars & Trailers	2 Axle Long	Buses	2 Axle 6 Tire	3 Axle Single	4 Axle Single	<5 Axl Double	5 Axle Double	>6 Axl Double	<6 Axl Multi	6 Axle Multi	>6 Axl Multi	Total
05/26/06	0	13	0	1	0	0	0	0	0	0	0	0	0	14
01:00	0	4	0	0	0	0	0	0	0	0	0	0	0	4
02:00	0	1	0	0	0	0	0	0	0	0	0	0	0	1
03:00	0	4	1	0	0	0	0	0	0	0	0	0	0	5
04:00	0	7	3	0	0	0	0	0	0	0	0	0	0	10
05:00	0	19	17	0	0	0	0	0	0	0	0	0	0	36
06:00	0	64	19	0	0	0	0	0	0	0	0	0	0	83
07:00	**1**	121	29	5	**7**	0	0	0	0	0	0	0	0	163
08:00	1	**148**	26	**6**	3	0	0	0	0	0	0	0	0	**184**
09:00	0	107	18	0	3	0	0	**2**	**1**	0	0	0	0	131
10:00	0	89	**30**	0	1	**1**	0	0	0	0	0	0	0	121
11:00	1	103	30	0	4	0	0	1	0	0	0	0	0	139
12 PM	0	114	30	0	3	0	0	0	0	0	0	0	0	147
13:00	0	104	24	1	3	0	0	0	0	0	0	0	0	132
14:00	**2**	**156**	**40**	3	**4**	0	0	**1**	0	0	0	0	0	**206**
15:00	2	136	25	**6**	4	1	0	0	0	0	0	0	0	174
16:00	1	136	32	0	4	**2**	0	0	**1**	0	0	0	0	176
17:00	1	143	31	0	4	0	0	0	0	0	0	0	0	179
18:00	0	97	25	0	3	0	0	1	0	0	0	0	0	126
19:00	0	102	12	0	0	0	0	0	0	**1**	0	0	0	115
20:00	0	56	10	0	1	0	0	0	0	0	0	0	0	67
21:00	0	35	5	0	1	0	0	0	0	0	0	0	0	41
22:00	0	40	1	1	0	0	0	0	0	0	0	0	0	42
23:00	0	23	2	0	0	0	0	0	0	0	0	0	0	25
Day Total	9	1822	410	23	45	4	0	5	2	1	0	0	0	2321
Percent	0.4%	78.5%	17.7%	1.0%	1.9%	0.2%	0.0%	0.2%	0.1%	0.0%	0.0%	0.0%	0.0%	
AM Peak	07:00	08:00	10:00	08:00	07:00	10:00		09:00	09:00					08:00
Vol.	1	148	30	6	7	1		2	1					184
PM Peak	14:00	14:00	14:00	15:00	14:00	16:00		14:00	16:00	19:00				14:00
Vol.	2	156	40	6	4	2		1	1	1				206

Location : Union Street South of
Location : Garden Street
City/State: Milford, NH
Counter : 16217
Northbound

Accurate Counts
978-664-2565

517840C3
Site Code: 51784003

Start Time	Bikes	Cars & Trailers	2 Axle Long	Buses	2 Axle 6 Tire	3 Axle Single	4 Axle Single	<5 Axl Double	5 Axle Double	>6 Axl Double	<6 Axl Multi	6 Axle Multi	>6 Axl Multi	Total
05/27/06	0	14	3	0	0	0	0	0	0	0	0	0	0	17
01:00	0	7	0	0	0	0	0	0	0	0	0	0	0	7
02:00	0	8	0	0	0	0	0	0	0	0	0	0	0	8
03:00	0	7	0	0	0	0	0	0	0	0	0	0	0	7
04:00	0	9	1	0	0	0	0	0	0	0	0	0	0	10
05:00	0	9	3	0	0	0	0	0	0	0	0	0	0	12
06:00	0	28	9	0	**2**	0	0	0	0	0	0	0	0	39
07:00	0	62	20	0	1	0	0	0	0	0	0	0	0	83
08:00	0	107	27	0	0	0	0	0	0	0	0	0	0	134
09:00	0	121	28	0	1	**1**	0	0	0	0	0	0	0	151
10:00	**1**	**127**	27	0	2	0	0	0	0	0	0	0	0	**157**
11:00	1	116	**32**	0	1	0	0	0	0	0	0	0	0	150
12 PM	0	**119**	26	0	1	0	0	0	0	0	0	0	0	**146**
13:00	0	103	**34**	0	2	0	0	0	0	0	0	0	0	139
14:00	0	92	23	0	**3**	0	0	0	0	0	0	0	0	118
15:00	0	110	17	0	3	0	0	0	0	0	0	0	0	130
16:00	0	80	20	0	0	0	0	0	0	0	0	0	0	100
17:00	0	74	15	0	0	0	0	**1**	0	0	0	0	0	90
18:00	0	66	9	0	2	0	0	0	0	0	0	0	0	77
19:00	**2**	67	11	0	1	0	0	0	0	0	0	0	0	81
20:00	0	77	8	0	0	0	0	0	0	0	0	0	0	85
21:00	0	48	5	0	0	0	0	0	0	0	0	0	0	53
22:00	0	28	8	0	0	0	0	0	0	0	0	0	0	36
23:00	0	18	0	0	0	0	0	0	0	0	0	0	0	18
Day Total	4	1497	326	0	19	1	0	1	0	0	0	0	0	1848
Percent	0.2%	81.0%	17.6%	0.0%	1.0%	0.1%	0.0%	0.1%	0.0%	0.0%	0.0%	0.0%	0.0%	
AM Peak	10:00	10:00	11:00		06:00	09:00								10:00
Vol.	1	127	32		2	1								157
PM Peak	19:00	12:00	13:00		14:00			17:00						12:00
Vol.	2	119	34		3			1						146

Location : Union Street South of
Location : Garden Street
City/State: Milford, NH
Counter : 16217
Northbound

Accurate Counts
978-664-2565

517840C3
Site Code: 51784003

Start Time	Bikes	Cars & Trailers	2 Axle Long	Buses	2 Axle 6 Tire	3 Axle Single	4 Axle Single	<5 Axl Double	5 Axle Double	>6 Axl Double	<6 Axl Multi	6 Axle Multi	>6 Axl Multi	Total
05/28/06	0	17	2	0	1	0	0	0	0	0	0	0	0	20
01:00	0	13	2	0	0	0	0	0	0	0	0	0	0	15
02:00	0	4	0	0	1	0	0	0	0	0	0	0	0	5
03:00	0	3	1	0	0	0	0	0	0	0	0	0	0	4
04:00	0	5	1	0	0	0	0	0	0	0	0	0	0	6
05:00	0	8	1	0	0	0	0	0	0	0	0	0	0	9
06:00	0	20	8	0	0	0	0	0	0	0	0	0	0	28
07:00	0	40	13	0	0	0	0	0	0	0	0	0	0	53
08:00	0	73	16	0	1	0	0	0	0	0	0	0	0	90
09:00	0	**105**	**27**	0	1	0	0	0	0	0	0	0	0	**133**
10:00	0	80	18	0	**2**	0	0	**1**	0	0	0	0	0	101
11:00	0	92	21	0	1	0	0	0	0	0	0	0	0	114
12 PM	0	68	**17**	0	**1**	0	0	0	0	0	0	0	0	**86**
13:00	1	65	15	0	1	0	0	0	0	0	0	0	0	82
14:00	0	**69**	16	0	0	0	0	0	0	0	0	0	0	85
15:00	0	68	10	0	1	0	0	**1**	0	0	0	0	0	80
16:00	0	55	13	0	1	0	0	0	0	0	0	0	0	69
17:00	0	48	11	0	1	0	0	0	0	0	0	0	0	60
18:00	0	69	16	0	0	0	0	0	0	0	0	0	0	85
19:00	**2**	61	9	0	0	0	0	0	0	0	0	0	0	72
20:00	1	46	7	0	0	0	0	1	0	0	0	0	0	55
21:00	0	27	4	0	1	0	0	0	0	0	0	0	0	32
22:00	0	14	5	0	0	0	0	0	0	0	0	0	0	19
23:00	0	18	1	0	1	0	0	0	0	0	0	0	0	20
Day Total	4	1068	234	0	14	0	0	3	0	0	0	0	0	1323
Percent	0.3%	80.7%	17.7%	0.0%	1.1%	0.0%	0.0%	0.2%	0.0%	0.0%	0.0%	0.0%	0.0%	
AM Peak		09:00	09:00		10:00			10:00						09:00
Vol.		105	27		2			1						133
PM Peak	19:00	14:00	12:00		12:00			15:00						12:00
Vol.	2	69	17		1			1						86

Location : Union Street South of
Location : Garden Street
City/State: Milford, NH
Counter : 16217
Northbound

Accurate Counts
978-664-2565

517840C3
Site Code: 51784003

Start Time	Bikes	Cars & Trailers	2 Axle Long	Buses	2 Axle 6 Tire	3 Axle Single	4 Axle Single	<5 Axl Double	5 Axle Double	>6 Axl Double	<6 Axl Multi	6 Axle Multi	>6 Axl Multi	Total
05/29/06	0	20	0	0	0	0	0	0	0	0	0	0	0	20
01:00	0	11	1	0	0	0	0	0	0	0	0	0	0	12
02:00	0	8	0	0	0	0	0	0	0	0	0	0	0	8
03:00	0	7	5	0	**4**	0	0	0	0	0	0	0	0	16
04:00	0	9	0	0	0	0	0	0	0	0	0	0	0	9
05:00	0	8	1	0	0	0	0	0	0	0	0	0	0	9
06:00	0	12	6	0	0	0	0	0	0	0	0	0	0	18
07:00	0	25	10	0	1	0	0	0	0	0	0	0	0	36
08:00	0	38	16	0	1	0	0	0	0	0	0	0	0	55
09:00	0	76	23	0	0	**1**	0	0	0	0	0	0	0	100
10:00	0	122	**30**	0	0	0	0	0	0	0	0	0	0	152
11:00	**1**	**151**	16	0	1	0	0	0	0	0	0	0	0	**169**
12 PM	0	51	15	0	1	0	0	0	0	0	0	0	0	67
13:00	0	65	15	0	1	0	0	0	0	0	0	0	0	81
14:00	0	61	**23**	0	3	0	0	**1**	0	0	0	0	0	88
15:00	0	**87**	16	0	**4**	0	0	0	0	0	0	0	0	**107**
16:00	0	69	16	0	0	0	0	0	0	0	0	0	0	85
17:00	0	75	14	0	0	0	0	0	0	0	0	0	0	89
18:00	**1**	74	12	0	2	0	0	0	0	0	0	0	0	89
19:00	0	72	10	0	1	0	0	1	0	0	0	0	0	84
20:00	0	50	10	0	0	0	0	0	0	0	0	0	0	60
21:00	0	36	10	0	0	0	0	0	0	0	0	0	0	46
22:00	0	21	1	0	0	**1**	0	0	0	0	0	0	0	23
23:00	1	18	1	0	0	0	0	0	0	0	0	0	0	20
Day Total	3	1166	251	0	19	2	0	2	0	0	0	0	0	1443
Percent	0.2%	80.8%	17.4%	0.0%	1.3%	0.1%	0.0%	0.1%	0.0%	0.0%	0.0%	0.0%	0.0%	
AM Peak	11:00	11:00	10:00		03:00	09:00								11:00
Vol.	1	151	30		4	1								169
PM Peak	18:00	15:00	14:00		15:00	22:00		14:00						15:00
Vol.	1	87	23		4	1		1						107

Location : Union Street South of
Location : Garden Street
City/State: Milford, NH
Counter : 16217
Northbound

Accurate Counts
978-664-2565

517840C3
Site Code: 51784003

Start Time	Bikes	Cars & Trailers	2 Axle Long	Buses	2 Axle 6 Tire	3 Axle Single	4 Axle Single	<5 Axl Double	5 Axle Double	>6 Axl Double	<6 Axl Multi	6 Axle Multi	>6 Axl Multi	Total
05/30/06	0	9	0	0	0	0	0	0	0	0	0	0	0	9
01:00	0	5	0	0	0	0	0	0	0	0	0	0	0	5
02:00	0	6	0	0	0	0	0	0	0	0	0	0	0	6
03:00	0	5	1	0	0	0	0	0	0	0	0	0	0	6
04:00	0	6	4	0	0	0	0	0	0	0	0	0	0	10
05:00	0	18	10	0	1	0	0	0	0	0	0	0	0	29
06:00	0	54	25	0	3	0	0	0	0	0	0	0	0	82
07:00	0	**138**	**38**	2	**6**	**1**	0	**2**	0	0	0	0	0	**187**
08:00	0	128	29	**6**	3	1	0	0	0	0	0	0	0	167
09:00	0	101	31	0	4	0	0	0	0	0	0	0	0	136
10:00	0	104	22	0	4	0	0	2	0	0	0	0	0	132
11:00	0	87	32	0	4	0	0	1	0	0	0	0	0	124
12 PM	0	105	35	0	5	**1**	0	**1**	0	0	0	0	0	147
13:00	0	92	23	0	5	0	0	0	0	0	0	0	0	120
14:00	1	**156**	36	3	**7**	0	0	0	0	0	0	0	0	203
15:00	0	130	39	**5**	7	0	0	0	0	0	0	0	0	181
16:00	0	140	24	1	3	0	0	0	0	0	0	0	0	168
17:00	**2**	151	**47**	0	5	0	0	0	0	0	0	0	0	**205**
18:00	0	124	27	0	1	0	0	0	0	0	0	0	0	152
19:00	1	116	14	0	1	0	0	0	0	0	0	0	0	132
20:00	1	78	4	0	1	0	0	0	0	0	0	0	0	84
21:00	0	38	6	0	0	0	0	0	0	0	0	0	0	44
22:00	0	15	2	0	1	0	0	0	0	0	0	0	0	18
23:00	0	20	1	0	0	0	0	0	0	0	0	0	0	21
Day Total	5	1826	450	17	61	3	0	6	0	0	0	0	0	2368
Percent	0.2%	77.1%	19.0%	0.7%	2.6%	0.1%	0.0%	0.3%	0.0%	0.0%	0.0%	0.0%	0.0%	
AM Peak		07:00	07:00	08:00	07:00	07:00		07:00						07:00
Vol.		138	38	6	6	1		2						187
PM Peak	17:00	14:00	17:00	15:00	14:00	12:00		12:00						17:00
Vol.	2	156	47	5	7	1		1						205

Location : Union Street South of
Location : Garden Street
City/State: Milford, NH
Counter : 16217
Northbound

Accurate Counts
978-664-2565

517840C3
Site Code: 51784003

Start Time	Bikes	Cars & Trailers	2 Axle Long	Buses	2 Axle 6 Tire	3 Axle Single	4 Axle Single	<5 Axl Double	5 Axle Double	>6 Axl Double	<6 Axl Multi	6 Axle Multi	>6 Axl Multi	Total
05/31/06	0	6	2	0	0	0	0	0	0	0	0	0	0	8
01:00	0	7	0	0	0	0	0	0	0	0	0	0	0	7
02:00	0	3	0	0	0	0	0	0	0	0	0	0	0	3
03:00	0	4	1	0	0	0	0	0	0	0	0	0	0	5
04:00	0	5	1	0	0	0	0	0	0	0	0	0	0	6
05:00	0	21	11	0	2	0	0	0	0	0	0	0	0	34
06:00	**1**	68	31	0	2	**1**	0	**1**	0	0	0	0	0	104
07:00	0	**143**	**40**	**7**	3	1	**2**	1	0	0	0	0	0	**197**
08:00	1	125	30	5	**4**	0	1	0	0	0	0	0	0	166
09:00	0	88	27	0	4	0	1	0	0	0	0	0	0	120
10:00	1	81	17	0	3	0	1	1	0	0	0	0	0	104
11:00	0	102	21	2	3	0	0	0	0	0	0	0	0	128
12 PM	0	109	22	0	5	0	**1**	0	0	0	0	0	0	137
13:00	0	97	21	0	2	**1**	1	0	0	0	0	0	0	122
14:00	0	140	26	2	2	0	0	0	**1**	0	0	0	0	171
15:00	**1**	139	30	**5**	5	0	0	0	0	0	0	0	0	180
16:00	0	160	28	4	**6**	1	0	**1**	0	0	0	0	0	200
17:00	1	**163**	**42**	0	0	0	0	0	0	0	0	0	0	**206**
18:00	0	138	24	0	0	0	0	1	0	0	0	0	0	163
19:00	0	96	8	0	0	0	0	0	0	0	0	0	0	104
20:00	0	98	11	0	2	0	0	0	0	0	0	0	0	111
21:00	0	58	12	0	0	0	0	0	0	0	0	0	0	70
22:00	0	21	2	0	0	0	0	0	0	0	0	0	0	23
23:00	0	17	1	0	1	0	0	0	0	0	0	0	0	19
Day Total	5	1889	408	25	44	4	7	5	1	0	0	0	0	2388
Percent	0.2%	79.1%	17.1%	1.0%	1.8%	0.2%	0.3%	0.2%	0.0%	0.0%	0.0%	0.0%	0.0%	
AM Peak	06:00	07:00	07:00	07:00	08:00	06:00	07:00	06:00						07:00
Vol.	1	143	40	7	4	1	2	1						197
PM Peak	15:00	17:00	17:00	15:00	16:00	13:00	12:00	16:00	14:00					17:00
Vol.	1	163	42	5	6	1	1	1	1					206

Location : Union Street South of
Location : Garden Street
City/State: Milford, NH
Counter : 16217
Northbound

Accurate Counts
978-664-2565

517840C3
Site Code: 51784003

Start Time	Bikes	Cars & Trailers	2 Axle Long	Buses	2 Axle 6 Tire	3 Axle Single	4 Axle Single	<5 Axl Double	5 Axle Double	>6 Axl Double	<6 Axl Multi	6 Axle Multi	>6 Axl Multi	Total
06/01/06	0	5	1	0	0	0	0	0	0	0	0	0	0	6
01:00	0	4	0	0	0	0	0	0	0	0	0	0	0	4
02:00	0	5	0	0	0	0	0	0	0	0	0	0	0	5
03:00	0	5	1	0	0	0	0	0	0	0	0	0	0	6
04:00	0	4	3	0	0	0	0	0	0	0	0	0	0	7
05:00	0	25	17	0	2	0	0	0	0	0	0	0	0	44
06:00	0	56	23	0	2	0	0	0	0	0	0	0	0	81
07:00	**1**	**155**	**29**	2	3	0	0	**1**	0	0	0	0	0	**191**
08:00	1	127	29	**3**	**6**	**3**	0	1	0	**1**	0	0	0	171
09:00	0	97	19	0	2	1	0	0	0	0	0	0	0	119
10:00	0	91	15	0	0	0	0	0	0	0	0	0	0	106
11:00	1	80	21	0	2	1	0	0	0	0	0	0	0	105
12 PM	0	125	30	0	2	0	0	0	0	0	0	0	0	157
13:00	0	127	26	1	1	0	0	0	0	0	0	0	0	155
14:00	0	173	**33**	**3**	4	0	0	**3**	0	0	0	0	0	**216**
15:00	0	152	28	2	**5**	0	0	0	0	0	0	0	0	187
16:00	0	**178**	32	1	4	0	0	1	0	0	0	0	0	216
17:00	0	172	33	0	1	**1**	0	0	0	0	0	0	0	207
18:00	0	168	31	0	1	0	0	0	**1**	0	0	0	0	201
19:00	0	105	20	0	2	0	0	0	0	0	0	0	0	127
20:00	0	108	24	0	1	1	0	0	0	0	0	0	0	134
21:00	0	70	7	0	0	0	0	0	0	0	0	0	0	77
22:00	0	30	4	0	0	0	0	0	0	0	0	0	0	34
23:00	0	10	3	0	0	0	0	0	0	0	0	0	0	13
Day Total	3	2072	429	12	38	7	0	6	1	1	0	0	0	2569
Percent	0.1%	80.7%	16.7%	0.5%	1.5%	0.3%	0.0%	0.2%	0.0%	0.0%	0.0%	0.0%	0.0%	
AM Peak	07:00	07:00	07:00	08:00	08:00	08:00		07:00		08:00				07:00
Vol.	1	155	29	3	6	3		1		1				191
PM Peak		16:00	14:00	14:00	15:00	17:00		14:00	18:00					14:00
Vol.		178	33	3	5	1		3	1					216

Location : Union Street South of
Location : Garden Street
City/State: Milford, NH
Counter : 16217
Northbound

Accurate Counts
978-664-2565

517840C3
Site Code: 51784003

Start Time	Bikes	Cars & Trailers	2 Axle Long	Buses	2 Axle 6 Tire	3 Axle Single	4 Axle Single	<5 Axl Double	5 Axle Double	>6 Axl Double	<6 Axl Multi	6 Axle Multi	>6 Axl Multi	Total
06/02/06	0	8	1	0	0	0	0	0	0	0	0	0	0	9
01:00	0	6	0	0	0	0	0	0	0	0	0	0	0	6
02:00	0	3	1	0	0	0	0	0	0	0	0	0	0	4
03:00	0	7	1	0	0	0	0	0	0	0	0	0	0	8
04:00	0	5	4	0	0	0	0	0	0	0	0	0	0	9
05:00	0	13	12	0	0	0	0	0	0	0	0	0	0	25
06:00	0	58	24	0	0	0	0	0	0	0	0	0	0	82
07:00	**1**	**157**	33	1	**6**	0	0	0	0	**1**	0	0	0	**199**
08:00	0	141	**46**	**5**	3	**1**	0	**3**	0	0	0	0	0	199
09:00	0	2	0	0	0	0	0	0	0	0	0	0	0	2
10:00	0	0	0	0	0	0	0	0	0	0	0	0	0	0
11:00	0	0	0	0	0	0	0	0	0	0	0	0	0	0
12 PM	0	0	0	0	0	0	0	0	0	0	0	0	0	0
13:00	0	0	0	0	0	0	0	0	0	0	0	0	0	0
14:00	0	0	0	0	0	0	0	0	0	0	0	0	0	0
15:00	0	0	0	0	0	0	0	0	0	0	0	0	0	0
16:00	0	0	0	0	0	0	0	0	0	0	0	0	0	0
17:00	0	0	0	0	0	0	0	0	0	0	0	0	0	0
18:00	0	0	0	0	0	0	0	0	0	0	0	0	0	0
19:00	0	0	0	0	0	0	0	0	0	0	0	0	0	0
20:00	0	0	0	0	0	0	0	0	0	0	0	0	0	0
21:00	0	0	0	0	0	0	0	0	0	0	0	0	0	0
22:00	0	0	0	0	0	0	0	0	0	0	0	0	0	0
23:00	0	0	0	0	0	0	0	0	0	0	0	0	0	0
Day Total	1	400	122	6	9	1	0	3	0	1	0	0	0	543
Percent	0.2%	73.7%	22.5%	1.1%	1.7%	0.2%	0.0%	0.6%	0.0%	0.2%	0.0%	0.0%	0.0%	
AM Peak	07:00	07:00	08:00	08:00	07:00	08:00		08:00		07:00				07:00
Vol.	1	157	46	5	6	1		3		1				199
PM Peak Vol.														

Location : Union Street South of
Location : Garden Street
City/State: Milford, NH
Counter : 16217
Northbound

Accurate Counts
978-664-2565

517840C3
Site Code: 51784003

Start Time	Bikes	Cars & Trailers	2 Axle Long	Buses	2 Axle 6 Tire	3 Axle Single	4 Axle Single	<5 Axl Double	5 Axle Double	>6 Axl Double	<6 Axl Multi	6 Axle Multi	>6 Axl Multi	Total
06/03/06	0	0	0	0	0	0	0	0	0	0	0	0	0	0
01:00	0	0	0	0	0	0	0	0	0	0	0	0	0	0
02:00	0	0	0	0	0	0	0	0	0	0	0	0	0	0
03:00	0	0	0	0	0	0	0	0	0	0	0	0	0	0
04:00	0	0	0	0	0	0	0	0	0	0	0	0	0	0
05:00	0	0	0	0	0	0	0	0	0	0	0	0	0	0
06:00	0	0	0	0	0	0	0	0	0	0	0	0	0	0
07:00	0	0	0	0	0	0	0	0	0	0	0	0	0	0
08:00	0	0	0	0	0	0	0	0	0	0	0	0	0	0
09:00	0	0	0	0	0	0	0	0	0	0	0	0	0	0
10:00	0	0	0	0	0	0	0	0	0	0	0	0	0	0
11:00	0	0	0	0	0	0	0	0	0	0	0	0	0	0
12 PM	0	0	0	0	0	0	0	0	0	0	0	0	0	0
13:00	0	0	0	0	0	0	0	0	0	0	0	0	0	0
14:00	0	0	0	0	0	0	0	0	0	0	0	0	0	0
15:00	0	0	0	0	0	0	0	0	0	0	0	0	0	0
16:00	0	0	0	0	0	0	0	0	0	0	0	0	0	0
17:00	0	0	0	0	0	0	0	0	0	0	0	0	0	0
18:00	0	0	0	0	0	0	0	0	0	0	0	0	0	0
19:00	0	0	0	0	0	0	0	0	0	0	0	0	0	0
20:00	0	0	0	0	0	0	0	0	0	0	0	0	0	0
21:00	0	0	0	0	0	0	0	0	0	0	0	0	0	0
22:00	0	0	0	0	0	0	0	0	0	0	0	0	0	0
23:00	0	0	0	0	0	0	0	0	0	0	0	0	0	0
Day Total	0	0	0	0	0	0	0	0	0	0	0	0	0	0
Percent	0.0%	0.0%	0.0%	0.0%	0.0%	0.0%	0.0%	0.0%	0.0%	0.0%	0.0%	0.0%	0.0%	
AM Peak Vol.														
PM Peak Vol.														

Location : Union Street South of
Location : Garden Street
City/State: Milford, NH
Counter : 16217
Northbound

Accurate Counts
978-664-2565

517840C3
Site Code: 51784003

Start Time	Bikes	Cars & Trailers	2 Axle Long	Buses	2 Axle 6 Tire	3 Axle Single	4 Axle Single	<5 Axl Double	5 Axle Double	>6 Axl Double	<6 Axl Multi	6 Axle Multi	>6 Axl Multi	Total
06/04/06	0	0	0	0	0	0	0	0	0	0	0	0	0	0
01:00	0	0	0	0	0	0	0	0	0	0	0	0	0	0
02:00	0	0	0	0	0	0	0	0	0	0	0	0	0	0
03:00	0	0	0	0	0	0	0	0	0	0	0	0	0	0
04:00	0	0	0	0	0	0	0	0	0	0	0	0	0	0
05:00	0	0	0	0	0	0	0	0	0	0	0	0	0	0
06:00	0	0	0	0	0	0	0	0	0	0	0	0	0	0
07:00	0	0	0	0	0	0	0	0	0	0	0	0	0	0
08:00	0	0	0	0	0	0	0	0	0	0	0	0	0	0
09:00	0	0	0	0	0	0	0	0	0	0	0	0	0	0
10:00	0	0	0	0	0	0	0	0	0	0	0	0	0	0
11:00	0	0	0	0	0	0	0	0	0	0	0	0	0	0
12 PM	0	0	0	0	0	0	0	0	0	0	0	0	0	0
13:00	0	0	0	0	0	0	0	0	0	0	0	0	0	0
14:00	0	0	0	0	0	0	0	0	0	0	0	0	0	0
15:00	0	0	0	0	0	0	0	0	0	0	0	0	0	0
16:00	0	0	0	0	0	0	0	0	0	0	0	0	0	0
17:00	0	0	0	0	0	0	0	0	0	0	0	0	0	0
18:00	0	0	0	0	0	0	0	0	0	0	0	0	0	0
19:00	0	0	0	0	0	0	0	0	0	0	0	0	0	0
20:00	0	0	0	0	0	0	0	0	0	0	0	0	0	0
21:00	0	0	0	0	0	0	0	0	0	0	0	0	0	0
22:00	0	0	0	0	0	0	0	0	0	0	0	0	0	0
23:00	0	0	0	0	0	0	0	0	0	0	0	0	0	0
Day Total	0	0	0	0	0	0	0	0	0	0	0	0	0	0
Percent	0.0%	0.0%	0.0%	0.0%	0.0%	0.0%	0.0%	0.0%	0.0%	0.0%	0.0%	0.0%	0.0%	
AM Peak Vol.														
PM Peak Vol.														

Location : Union Street South of
Location : Garden Street
City/State: Milford, NH
Counter : 16217
Northbound

Accurate Counts
978-664-2565

517840C3
Site Code: 51784003

Start Time	Bikes	Cars & Trailers	2 Axle Long	Buses	2 Axle 6 Tire	3 Axle Single	4 Axle Single	<5 Axl Double	5 Axle Double	>6 Axl Double	<6 Axl Multi	6 Axle Multi	>6 Axl Multi	Total
06/05/06	0	0	0	0	0	0	0	0	0	0	0	0	0	0
01:00	0	0	0	0	0	0	0	0	0	0	0	0	0	0
02:00	0	0	0	0	0	0	0	0	0	0	0	0	0	0
03:00	0	0	0	0	0	0	0	0	0	0	0	0	0	0
04:00	0	0	0	0	0	0	0	0	0	0	0	0	0	0
05:00	0	0	0	0	0	0	0	0	0	0	0	0	0	0
06:00	*	*	*	*	*	*	*	*	*	*	*	*	*	*
07:00	*	*	*	*	*	*	*	*	*	*	*	*	*	*
08:00	*	*	*	*	*	*	*	*	*	*	*	*	*	*
09:00	*	*	*	*	*	*	*	*	*	*	*	*	*	*
10:00	*	*	*	*	*	*	*	*	*	*	*	*	*	*
11:00	*	*	*	*	*	*	*	*	*	*	*	*	*	*
12 PM	*	*	*	*	*	*	*	*	*	*	*	*	*	*
13:00	*	*	*	*	*	*	*	*	*	*	*	*	*	*
14:00	*	*	*	*	*	*	*	*	*	*	*	*	*	*
15:00	*	*	*	*	*	*	*	*	*	*	*	*	*	*
16:00	*	*	*	*	*	*	*	*	*	*	*	*	*	*
17:00	*	*	*	*	*	*	*	*	*	*	*	*	*	*
18:00	*	*	*	*	*	*	*	*	*	*	*	*	*	*
19:00	*	*	*	*	*	*	*	*	*	*	*	*	*	*
20:00	*	*	*	*	*	*	*	*	*	*	*	*	*	*
21:00	*	*	*	*	*	*	*	*	*	*	*	*	*	*
22:00	*	*	*	*	*	*	*	*	*	*	*	*	*	*
23:00	*	*	*	*	*	*	*	*	*	*	*	*	*	*
Day Total	0	0	0	0	0	0	0	0	0	0	0	0	0	0
Percent	0.0%	0.0%	0.0%	0.0%	0.0%	0.0%	0.0%	0.0%	0.0%	0.0%	0.0%	0.0%	0.0%	
AM Peak Vol.														
PM Peak Vol.														
Grand Total	84	25422	5607	179	563	71	9	74	13	15	0	0	0	32037
Percent	0.3%	79.4%	17.5%	0.6%	1.8%	0.2%	0.0%	0.2%	0.0%	0.0%	0.0%	0.0%	0.0%	

Location : Union Street South of
Location : Garden Street
City/State: Milford, NH
Counter : 16217
Southbound, Northbound

Accurate Counts
978-664-2565

517840C3
Site Code: 51784003

Start Time	Bikes	Cars & Trailers	2 Axle Long	Buses	2 Axle 6 Tire	3 Axle Single	4 Axle Single	<5 Axl Double	5 Axle Double	>6 Axl Double	<6 Axl Multi	6 Axle Multi	>6 Axl Multi	Total
05/18/06	*	*	*	*	*	*	*	*	*	*	*	*	*	*
01:00	*	*	*	*	*	*	*	*	*	*	*	*	*	*
02:00	*	*	*	*	*	*	*	*	*	*	*	*	*	*
03:00	*	*	*	*	*	*	*	*	*	*	*	*	*	*
04:00	*	*	*	*	*	*	*	*	*	*	*	*	*	*
05:00	*	*	*	*	*	*	*	*	*	*	*	*	*	*
06:00	*	*	*	*	*	*	*	*	*	*	*	*	*	*
07:00	*	*	*	*	*	*	*	*	*	*	*	*	*	*
08:00	*	*	*	*	*	*	*	*	*	*	*	*	*	*
09:00	*	*	*	*	*	*	*	*	*	*	*	*	*	*
10:00	**2**	**150**	**29**	0	**8**	0	0	**6**	0	**1**	0	0	0	**196**
11:00	0	146	18	0	6	**3**	0	3	0	1	0	0	0	177
12 PM	1	201	44	2	2	0	0	**2**	0	0	0	0	0	252
13:00	2	191	43	2	4	1	0	1	0	0	0	0	0	244
14:00	1	308	48	**7**	**8**	0	0	0	0	**1**	0	0	0	373
15:00	4	274	41	3	6	**2**	0	2	0	0	0	0	0	332
16:00	1	295	**68**	0	3	0	0	0	0	0	0	0	0	367
17:00	4	**338**	55	0	1	1	0	1	0	0	0	0	0	**400**
18:00	3	242	36	2	1	0	0	0	0	0	0	0	0	284
19:00	**9**	242	36	0	0	0	0	0	**1**	0	0	0	0	288
20:00	4	186	28	1	0	0	0	0	0	0	0	0	0	219
21:00	0	86	14	0	2	1	0	0	0	0	0	0	0	103
22:00	3	68	5	0	0	0	0	0	0	0	0	0	0	76
23:00	0	37	4	0	0	0	0	0	0	0	0	0	0	41
Day Total	34	2764	469	17	41	8	0	15	1	3	0	0	0	3352
Percent	1.0%	82.5%	14.0%	0.5%	1.2%	0.2%	0.0%	0.4%	0.0%	0.1%	0.0%	0.0%	0.0%	
AM Peak	10:00	10:00	10:00		10:00	11:00		10:00		10:00				10:00
Vol.	2	150	29		8	3		6		1				196
PM Peak	19:00	17:00	16:00	14:00	14:00	15:00		12:00	19:00	14:00				17:00
Vol.	9	338	68	7	8	2		2	1	1				400

Location : Union Street South of
Location : Garden Street
City/State: Milford, NH
Counter : 16217
Southbound, Northbound

Accurate Counts
978-664-2565

517840C3
Site Code: 51784003

Start Time	Bikes	Cars & Trailers	2 Axle Long	Buses	2 Axle 6 Tire	3 Axle Single	4 Axle Single	<5 Axl Double	5 Axle Double	>6 Axl Double	<6 Axl Multi	6 Axle Multi	>6 Axl Multi	Total
05/19/06	0	22	2	0	0	0	0	0	0	0	0	0	0	24
01:00	0	7	0	0	0	0	0	0	0	0	0	0	0	7
02:00	0	6	0	0	0	0	0	0	0	0	0	0	0	6
03:00	0	7	1	0	0	0	0	0	0	0	0	0	0	8
04:00	0	8	2	0	0	0	0	0	0	0	0	0	0	10
05:00	0	32	13	0	0	0	0	0	0	0	0	0	0	45
06:00	0	106	32	0	1	0	0	0	0	0	0	0	0	139
07:00	**4**	**263**	48	6	**8**	**5**	0	1	**1**	**1**	0	0	0	**337**
08:00	3	213	**49**	**14**	5	2	0	**2**	0	0	0	0	0	288
09:00	1	168	37	0	4	0	0	1	0	0	0	0	0	211
10:00	2	161	28	0	5	0	0	2	0	1	0	0	0	199
11:00	1	149	31	0	5	0	0	2	1	0	0	0	0	189
12 PM	**4**	215	44	0	**9**	**1**	0	0	**1**	0	0	0	0	274
13:00	0	211	35	0	6	0	0	**1**	0	**1**	0	0	0	254
14:00	1	**342**	**61**	1	5	1	0	0	0	0	0	0	0	**411**
15:00	0	241	41	**5**	6	0	0	1	0	0	0	0	0	294
16:00	1	310	55	0	1	0	0	1	1	0	0	0	0	369
17:00	4	298	51	0	5	0	0	0	0	0	0	0	0	358
18:00	2	262	43	0	1	0	0	1	0	0	0	0	0	309
19:00	4	191	24	0	1	0	0	0	1	0	0	0	0	221
20:00	0	128	22	0	1	1	0	0	0	0	0	0	0	152
21:00	0	113	13	0	1	0	0	0	0	0	0	0	0	127
22:00	1	105	17	0	0	0	0	0	0	0	0	0	0	123
23:00	0	59	4	0	1	0	0	0	0	0	0	0	0	64
Day Total	28	3617	653	26	65	10	0	12	5	3	0	0	0	4419
Percent	0.6%	81.9%	14.8%	0.6%	1.5%	0.2%	0.0%	0.3%	0.1%	0.1%	0.0%	0.0%	0.0%	
AM Peak	07:00	07:00	08:00	08:00	07:00	07:00		08:00	07:00	07:00				07:00
Vol.	4	263	49	14	8	5		2	1	1				337
PM Peak	12:00	14:00	14:00	15:00	12:00	12:00		13:00	12:00	13:00				14:00
Vol.	4	342	61	5	9	1		1	1	1				411

Location : Union Street South of
Location : Garden Street
City/State: Milford, NH
Counter : 16217
Southbound, Northbound

Accurate Counts
978-664-2565

517840C3
Site Code: 51784003

Start Time	Bikes	Cars & Trailers	2 Axle Long	Buses	2 Axle 6 Tire	3 Axle Single	4 Axle Single	<5 Axl Double	5 Axle Double	>6 Axl Double	<6 Axl Multi	6 Axle Multi	>6 Axl Multi	Total
05/20/06	0	30	3	0	0	0	0	0	0	0	0	0	0	33
01:00	0	20	3	0	0	0	0	0	0	0	0	0	0	23
02:00	0	7	1	0	0	0	0	0	0	0	0	0	0	8
03:00	0	11	0	0	0	0	0	0	0	0	0	0	0	11
04:00	0	13	3	0	0	0	0	0	0	0	0	0	0	16
05:00	0	19	5	0	1	0	0	0	0	0	0	0	0	25
06:00	0	50	21	0	1	**1**	0	0	0	0	0	0	0	73
07:00	0	136	46	0	2	1	0	1	0	0	0	0	0	186
08:00	9	252	38	0	2	1	0	1	0	0	0	0	0	303
09:00	**10**	348	54	0	1	1	0	1	0	0	0	0	0	415
10:00	2	342	**84**	0	**7**	0	0	0	0	**1**	0	0	0	436
11:00	6	**433**	69	0	3	0	0	**3**	0	0	0	0	0	**514**
12 PM	4	301	**62**	0	1	0	0	0	0	0	0	0	0	**368**
13:00	1	**307**	55	0	1	0	0	0	0	0	0	0	0	364
14:00	2	248	47	0	**2**	0	0	0	0	0	0	0	0	299
15:00	4	244	45	0	1	**1**	0	0	0	0	0	0	0	295
16:00	4	221	33	0	1	0	0	**1**	0	0	0	0	0	260
17:00	1	191	28	**1**	2	0	0	0	0	0	0	0	0	223
18:00	**6**	193	28	0	1	0	0	0	0	0	0	0	0	228
19:00	3	141	17	0	1	0	0	0	0	0	0	0	0	162
20:00	1	107	20	0	0	0	0	0	0	0	0	0	0	128
21:00	2	104	6	0	0	0	0	0	0	0	0	0	0	112
22:00	0	79	7	0	2	0	0	0	0	0	0	0	0	88
23:00	0	51	7	0	1	0	0	0	0	0	0	0	0	59
Day Total	55	3848	682	1	30	5	0	7	0	1	0	0	0	4629
Percent	1.2%	83.1%	14.7%	0.0%	0.6%	0.1%	0.0%	0.2%	0.0%	0.0%	0.0%	0.0%	0.0%	
AM Peak	09:00	11:00	10:00		10:00	06:00		11:00		10:00				11:00
Vol.	10	433	84		7	1		3		1				514
PM Peak	18:00	13:00	12:00	17:00	14:00	15:00		16:00						12:00
Vol.	6	307	62	1	2	1		1						368

Location : Union Street South of
Location : Garden Street
City/State: Milford, NH
Counter : 16217
Southbound, Northbound

Accurate Counts
978-664-2565

517840C3
Site Code: 51784003

Start Time	Bikes	Cars & Trailers	2 Axle Long	Buses	2 Axle 6 Tire	3 Axle Single	4 Axle Single	<5 Axl Double	5 Axle Double	>6 Axl Double	<6 Axl Multi	6 Axle Multi	>6 Axl Multi	Total
05/21/06	0	34	3	0	0	0	0	0	0	0	0	0	0	37
01:00	1	26	3	0	1	0	0	0	0	0	0	0	0	31
02:00	0	21	1	0	0	0	0	0	0	0	0	0	0	22
03:00	0	12	1	0	0	0	0	0	0	0	0	0	0	13
04:00	0	8	0	0	0	0	0	0	0	0	0	0	0	8
05:00	0	18	4	0	0	0	0	0	0	0	0	0	0	22
06:00	1	32	10	1	0	0	0	0	0	0	0	0	0	44
07:00	0	75	16	0	0	0	0	0	0	0	0	0	0	91
08:00	2	108	31	0	0	0	0	0	0	0	0	0	0	141
09:00	0	**221**	34	0	**2**	0	0	0	0	0	0	0	0	257
10:00	1	186	28	**2**	2	0	0	0	0	0	0	0	0	219
11:00	**6**	210	**43**	0	2	0	0	**1**	0	0	0	0	0	**262**
12 PM	1	212	25	0	2	**1**	0	0	0	0	0	0	0	241
13:00	2	**232**	27	0	2	0	0	**1**	0	0	0	0	0	**264**
14:00	0	182	25	0	0	0	0	1	0	0	0	0	0	208
15:00	4	207	30	0	**3**	0	0	0	0	0	0	0	0	244
16:00	1	143	26	0	1	0	0	0	0	0	0	0	0	171
17:00	1	195	**35**	0	0	0	0	0	0	0	0	0	0	231
18:00	1	148	35	0	3	1	0	0	0	0	0	0	0	188
19:00	5	111	15	0	0	0	0	0	0	0	0	0	0	131
20:00	**6**	115	10	0	1	0	0	0	0	0	0	0	0	132
21:00	0	91	8	0	0	1	0	0	0	0	0	0	0	100
22:00	0	41	1	0	0	0	0	0	0	0	0	0	0	42
23:00	0	26	2	0	0	0	0	0	0	0	0	0	0	28
Day Total	32	2654	413	3	19	3	0	3	0	0	0	0	0	3127
Percent	1.0%	84.9%	13.2%	0.1%	0.6%	0.1%	0.0%	0.1%	0.0%	0.0%	0.0%	0.0%	0.0%	
AM Peak	11:00	09:00	11:00	10:00	09:00			11:00						11:00
Vol.	6	221	43	2	2			1						262
PM Peak	20:00	13:00	17:00		15:00	12:00		13:00						13:00
Vol.	6	232	35		3	1		1						264

Location : Union Street South of
Location : Garden Street
City/State: Milford, NH
Counter : 16217
Southbound, Northbound

Accurate Counts
978-664-2565

517840C3
Site Code: 51784003

Start Time	Bikes	Cars & Trailers	2 Axle Long	Buses	2 Axle 6 Tire	3 Axle Single	4 Axle Single	<5 Axl Double	5 Axle Double	>6 Axl Double	<6 Axl Multi	6 Axle Multi	>6 Axl Multi	Total
05/22/06	0	10	0	0	0	0	0	0	0	0	0	0	0	10
01:00	0	15	7	0	1	0	0	0	0	0	0	0	0	23
02:00	0	6	1	0	0	0	0	0	0	0	0	0	0	7
03:00	0	9	2	0	0	0	0	0	0	0	0	0	0	11
04:00	0	9	4	0	1	0	0	0	0	0	0	0	0	14
05:00	1	34	11	0	0	0	0	0	1	0	0	0	0	47
06:00	1	100	30	1	3	1	0	0	1	0	0	0	0	137
07:00	1	**299**	**65**	3	5	1	0	**1**	**2**	1	0	0	0	**378**
08:00	1	203	45	**17**	**6**	**2**	0	1	0	1	0	0	0	276
09:00	0	138	38	0	6	2	0	1	0	0	0	0	0	185
10:00	**2**	145	31	0	1	0	0	0	1	**2**	0	0	0	182
11:00	2	181	28	0	4	0	0	1	0	0	0	0	0	216
12 PM	4	212	38	0	5	0	0	0	0	0	0	0	0	259
13:00	3	181	26	1	**9**	1	0	0	0	**2**	0	0	0	223
14:00	3	257	53	**4**	4	**3**	0	**1**	0	0	0	0	0	325
15:00	2	307	41	3	4	1	0	0	**2**	0	0	0	0	360
16:00	**9**	**321**	**57**	1	4	0	0	0	0	2	0	0	0	**394**
17:00	4	291	48	0	2	0	0	1	0	0	0	0	0	346
18:00	3	240	38	0	3	0	0	0	1	0	0	0	0	285
19:00	1	191	34	1	0	0	0	0	0	0	0	0	0	227
20:00	1	148	14	0	1	0	0	1	0	0	0	0	0	165
21:00	0	93	11	0	1	0	0	0	0	0	0	0	0	105
22:00	1	47	3	0	0	0	0	0	0	0	0	0	0	51
23:00	0	31	0	0	0	0	0	0	0	0	0	0	0	31
Day Total	39	3468	625	31	60	11	0	7	8	8	0	0	0	4257
Percent	0.9%	81.5%	14.7%	0.7%	1.4%	0.3%	0.0%	0.2%	0.2%	0.2%	0.0%	0.0%	0.0%	
AM Peak	10:00	07:00	07:00	08:00	08:00	08:00		07:00	07:00	10:00				07:00
Vol.	2	299	65	17	6	2		1	2	2				378
PM Peak	16:00	16:00	16:00	14:00	13:00	14:00		14:00	15:00	13:00				16:00
Vol.	9	321	57	4	9	3		1	2	2				394

Location : Union Street South of
Location : Garden Street
City/State: Milford, NH
Counter : 16217
Southbound, Northbound

Accurate Counts
978-664-2565

517840C3
Site Code: 51784003

Start Time	Bikes	Cars & Trailers	2 Axle Long	Buses	2 Axle 6 Tire	3 Axle Single	4 Axle Single	<5 Axl Double	5 Axle Double	>6 Axl Double	<6 Axl Multi	6 Axle Multi	>6 Axl Multi	Total
05/23/06	0	12	5	0	0	0	0	0	0	0	0	0	0	17
01:00	0	5	0	0	0	0	0	0	0	0	0	0	0	5
02:00	0	3	0	0	0	0	0	0	0	0	0	0	0	3
03:00	0	5	1	0	0	0	0	0	0	0	0	0	0	6
04:00	0	9	5	0	0	0	0	0	0	0	0	0	0	14
05:00	0	34	8	0	0	0	0	0	0	0	0	0	0	42
06:00	0	116	27	1	3	0	0	0	0	0	0	0	0	147
07:00	1	**285**	**57**	4	**6**	1	0	**1**	0	**2**	0	0	0	**357**
08:00	1	239	39	**18**	6	**4**	0	1	0	0	0	0	0	308
09:00	1	192	47	0	5	2	0	1	0	0	0	0	0	248
10:00	0	177	35	0	4	2	0	0	0	0	0	0	0	218
11:00	**4**	163	36	0	2	0	0	0	0	1	0	0	0	206
12 PM	3	214	31	1	2	**6**	0	2	0	0	0	0	0	259
13:00	2	222	32	0	5	4	0	**3**	0	1	0	0	0	269
14:00	1	362	54	**7**	7	6	0	1	0	0	0	0	0	438
15:00	0	284	57	4	**8**	5	0	1	0	**2**	0	0	0	361
16:00	**8**	332	60	4	7	3	0	0	0	0	0	0	**1**	415
17:00	4	**388**	**61**	0	3	4	0	0	**1**	0	0	0	0	**461**
18:00	3	276	40	0	5	2	0	0	0	0	0	0	0	326
19:00	1	212	33	0	1	2	0	1	0	1	0	0	0	251
20:00	1	183	22	0	4	1	0	0	1	0	0	0	0	212
21:00	0	79	10	0	0	0	0	0	0	0	0	0	0	89
22:00	0	54	4	0	1	0	0	0	0	0	0	0	0	59
23:00	0	32	8	0	0	0	0	0	0	0	0	0	0	40
Day Total	30	3878	672	39	69	42	0	11	2	7	0	0	1	4751
Percent	0.6%	81.6%	14.1%	0.8%	1.5%	0.9%	0.0%	0.2%	0.0%	0.1%	0.0%	0.0%	0.0%	
AM Peak	11:00	07:00	07:00	08:00	07:00	08:00		07:00		07:00				07:00
Vol.	4	285	57	18	6	4		1		2				357
PM Peak	16:00	17:00	17:00	14:00	15:00	12:00		13:00	17:00	15:00			16:00	17:00
Vol.	8	388	61	7	8	6		3	1	2			1	461

Location : Union Street South of
Location : Garden Street
City/State: Milford, NH
Counter : 16217
Southbound, Northbound

Accurate Counts
978-664-2565

517840C3
Site Code: 51784003

Start Time	Bikes	Cars & Trailers	2 Axle Long	Buses	2 Axle 6 Tire	3 Axle Single	4 Axle Single	<5 Axl Double	5 Axle Double	>6 Axl Double	<6 Axl Multi	6 Axle Multi	>6 Axl Multi	Total
05/24/06	0	16	0	0	0	0	0	0	0	0	0	0	0	16
01:00	0	10	0	0	0	0	0	0	0	0	0	0	0	10
02:00	0	2	0	0	0	0	0	0	0	0	0	0	0	2
03:00	0	5	1	0	0	0	0	0	0	0	0	0	0	6
04:00	0	8	4	0	0	0	0	0	0	0	0	0	0	12
05:00	3	34	13	0	0	0	0	0	0	0	0	0	0	50
06:00	0	120	25	1	3	0	0	1	0	0	0	0	0	150
07:00	**4**	**299**	**50**	2	8	2	0	0	0	1	0	0	0	**366**
08:00	3	210	41	**19**	**9**	3	**1**	**2**	0	**2**	0	0	0	290
09:00	1	148	42	0	4	4	0	0	0	0	0	0	0	199
10:00	0	167	23	0	3	**5**	1	1	0	1	0	0	0	201
11:00	3	197	35	1	4	0	0	0	0	2	0	0	0	242
12 PM	4	173	40	0	**5**	1	0	**1**	**1**	0	0	0	0	225
13:00	1	194	39	1	2	1	0	1	0	**2**	0	0	0	241
14:00	1	299	52	4	1	1	0	0	1	1	0	0	0	360
15:00	0	290	**55**	**6**	4	1	0	0	0	0	0	0	0	356
16:00	4	287	40	0	3	**3**	0	0	0	0	0	0	0	337
17:00	5	**329**	47	0	4	1	0	1	0	1	0	0	0	**388**
18:00	**10**	233	31	1	2	3	0	0	0	0	0	0	0	280
19:00	2	224	43	0	1	0	0	1	0	1	0	0	0	272
20:00	2	178	27	0	0	0	0	0	0	0	0	0	0	207
21:00	1	86	12	0	0	0	0	1	0	0	0	0	0	100
22:00	2	59	4	0	0	0	0	0	0	0	0	0	0	65
23:00	1	28	2	0	0	0	0	0	0	0	0	0	0	31
Day Total	47	3596	626	35	53	25	2	9	2	11	0	0	0	4406
Percent	1.1%	81.6%	14.2%	0.8%	1.2%	0.6%	0.0%	0.2%	0.0%	0.2%	0.0%	0.0%	0.0%	
AM Peak	07:00	07:00	07:00	08:00	08:00	10:00	08:00	08:00		08:00				07:00
Vol.	4	299	50	19	9	5	1	2		2				366
PM Peak	18:00	17:00	15:00	15:00	12:00	16:00		12:00	12:00	13:00				17:00
Vol.	10	329	55	6	5	3		1	1	2				388

Location : Union Street South of
Location : Garden Street
City/State: Milford, NH
Counter : 16217
Southbound, Northbound

Accurate Counts
978-664-2565

517840C3
Site Code: 51784003

Start Time	Bikes	Cars & Trailers	2 Axle Long	Buses	2 Axle 6 Tire	3 Axle Single	4 Axle Single	<5 Axl Double	5 Axle Double	>6 Axl Double	<6 Axl Multi	6 Axle Multi	>6 Axl Multi	Total
05/25/06	1	18	0	0	0	0	0	0	0	0	0	0	0	19
01:00	0	5	0	0	0	0	0	0	0	0	0	0	0	5
02:00	0	5	0	0	0	0	0	0	0	0	0	0	0	5
03:00	0	10	0	0	0	0	0	0	0	0	0	0	0	10
04:00	**2**	10	4	0	0	0	0	0	0	0	0	0	0	16
05:00	0	38	14	0	1	0	0	0	0	0	0	0	0	53
06:00	1	108	37	1	1	0	0	0	0	0	0	0	0	148
07:00	1	**289**	**49**	2	6	3	0	**1**	**1**	0	0	0	0	**352**
08:00	0	214	47	**19**	**7**	1	0	0	1	**1**	0	0	0	290
09:00	1	180	40	0	4	3	**1**	0	0	0	0	0	0	229
10:00	0	139	25	0	6	1	0	0	0	0	0	0	0	171
11:00	0	171	32	0	2	**4**	0	0	0	0	0	0	0	209
12 PM	1	204	48	0	2	1	0	**1**	0	0	0	0	0	257
13:00	4	202	31	0	4	**3**	0	0	0	0	0	0	0	244
14:00	2	309	55	3	2	1	0	1	0	0	0	0	0	373
15:00	1	307	49	**4**	3	1	0	1	0	0	0	0	0	366
16:00	3	380	**61**	1	**6**	1	0	1	0	0	0	0	0	453
17:00	**8**	**411**	61	0	3	2	0	0	0	0	0	0	0	**485**
18:00	6	286	45	1	1	0	0	0	0	0	0	0	0	339
19:00	2	251	43	0	2	0	0	0	0	0	0	0	0	298
20:00	6	214	27	0	0	0	0	0	0	0	0	0	0	247
21:00	2	126	15	0	0	0	0	0	0	0	0	0	0	143
22:00	1	55	8	0	1	0	0	0	0	0	0	0	0	65
23:00	0	42	2	0	0	0	0	0	0	0	0	0	0	44
Day Total	42	3974	693	31	51	21	1	5	2	1	0	0	0	4821
Percent	0.9%	82.4%	14.4%	0.6%	1.1%	0.4%	0.0%	0.1%	0.0%	0.0%	0.0%	0.0%	0.0%	
AM Peak	04:00	07:00	07:00	08:00	08:00	11:00	09:00	07:00	07:00	08:00				07:00
Vol.	2	289	49	19	7	4	1	1	1	1				352
PM Peak	17:00	17:00	16:00	15:00	16:00	13:00		12:00						17:00
Vol.	8	411	61	4	6	3		1						485

Location : Union Street South of
Location : Garden Street
City/State: Milford, NH
Counter : 16217
Southbound, Northbound

Accurate Counts
978-664-2565

517840C3
Site Code: 51784003

Start Time	Bikes	Cars & Trailers	2 Axle Long	Buses	2 Axle 6 Tire	3 Axle Single	4 Axle Single	<5 Axl Double	5 Axle Double	>6 Axl Double	<6 Axl Multi	6 Axle Multi	>6 Axl Multi	Total
05/26/06	0	29	0	2	0	0	0	0	0	0	0	0	0	31
01:00	0	13	0	0	0	0	0	0	0	0	0	0	0	13
02:00	0	5	0	0	0	0	0	0	0	0	0	0	0	5
03:00	0	7	1	0	0	0	0	0	0	0	0	0	0	8
04:00	0	10	3	0	0	0	0	0	0	0	0	0	0	13
05:00	0	37	18	0	0	0	0	0	0	0	0	0	0	55
06:00	0	104	23	1	0	0	0	0	0	0	0	0	0	128
07:00	**4**	263	42	5	**9**	**2**	0	0	0	0	0	0	0	325
08:00	4	**271**	**49**	**19**	3	0	0	1	0	0	0	0	0	**347**
09:00	1	208	31	0	5	0	0	**2**	**2**	0	0	0	0	249
10:00	2	160	47	0	2	2	0	1	1	0	0	0	0	215
11:00	1	237	47	0	8	1	0	1	0	0	0	0	0	295
12 PM	2	276	60	1	4	0	0	1	0	0	0	0	0	344
13:00	0	216	47	2	4	1	0	0	0	0	0	0	0	270
14:00	**6**	**330**	**66**	5	**5**	0	0	1	0	0	0	0	0	**413**
15:00	5	307	51	**6**	4	1	0	0	0	0	0	0	0	374
16:00	5	290	46	0	5	**2**	0	0	**1**	0	0	0	0	349
17:00	2	287	51	0	5	1	0	0	1	**1**	0	0	0	348
18:00	0	193	37	1	3	0	0	**2**	0	0	0	0	0	236
19:00	1	183	22	0	0	0	0	0	0	1	0	0	0	207
20:00	0	126	18	0	1	0	0	0	0	0	0	0	0	145
21:00	0	79	8	0	1	1	0	0	0	0	0	0	0	89
22:00	0	87	2	1	0	0	0	0	0	0	0	0	0	90
23:00	0	51	6	0	0	0	0	0	0	0	0	0	0	57
Day Total	33	3769	675	43	59	11	0	9	5	2	0	0	0	4606
Percent	0.7%	81.8%	14.7%	0.9%	1.3%	0.2%	0.0%	0.2%	0.1%	0.0%	0.0%	0.0%	0.0%	
AM Peak	07:00	08:00	08:00	08:00	07:00	07:00		09:00	09:00					08:00
Vol.	4	271	49	19	9	2		2	2					347
PM Peak	14:00	14:00	14:00	15:00	14:00	16:00		18:00	16:00	17:00				14:00
Vol.	6	330	66	6	5	2		2	1	1				413

Location : Union Street South of
Location : Garden Street
City/State: Milford, NH
Counter : 16217
Southbound, Northbound

Accurate Counts
978-664-2565

517840C3
Site Code: 51784003

Start Time	Bikes	Cars & Trailers	2 Axle Long	Buses	2 Axle 6 Tire	3 Axle Single	4 Axle Single	<5 Axl Double	5 Axle Double	>6 Axl Double	<6 Axl Multi	6 Axle Multi	>6 Axl Multi	Total
05/27/06	0	35	5	0	0	0	0	0	0	0	0	0	0	40
01:00	0	18	2	0	0	0	0	0	0	0	0	0	0	20
02:00	0	17	0	0	0	0	0	0	0	0	0	0	0	17
03:00	0	12	0	0	0	0	0	0	0	0	0	0	0	12
04:00	0	11	1	0	0	0	0	0	0	0	0	0	0	12
05:00	0	25	5	0	0	0	0	0	0	0	0	0	0	30
06:00	0	42	12	0	2	0	0	0	0	0	0	0	0	56
07:00	0	95	27	0	1	0	0	0	0	0	0	0	0	123
08:00	2	177	36	0	0	0	0	0	0	0	0	0	0	215
09:00	5	204	43	0	1	**1**	0	0	0	0	0	0	0	254
10:00	**8**	**291**	54	0	**3**	0	0	0	0	0	0	0	0	**356**
11:00	3	283	**57**	0	2	0	0	0	0	0	0	0	0	345
12 PM	0	**226**	**50**	0	2	**1**	0	0	0	0	0	0	0	**279**
13:00	**4**	204	50	0	**3**	0	0	0	0	0	0	0	0	261
14:00	0	203	37	0	3	1	0	0	0	0	0	0	0	244
15:00	1	220	35	0	3	0	0	0	0	0	0	0	0	259
16:00	3	197	31	0	0	0	0	0	0	0	0	0	0	231
17:00	3	160	25	0	0	0	0	**2**	0	0	0	0	0	190
18:00	4	146	13	0	3	1	0	0	0	0	0	0	0	167
19:00	3	143	19	0	3	0	0	0	0	0	0	0	0	168
20:00	1	143	14	0	0	0	0	0	0	0	0	0	0	158
21:00	0	99	7	0	0	0	0	0	0	0	0	0	0	106
22:00	0	80	14	0	0	0	0	0	0	0	0	0	0	94
23:00	2	61	0	0	0	0	0	0	0	0	0	0	0	63
Day Total	39	3092	537	0	26	4	0	2	0	0	0	0	0	3700
Percent	1.1%	83.6%	14.5%	0.0%	0.7%	0.1%	0.0%	0.1%	0.0%	0.0%	0.0%	0.0%	0.0%	
AM Peak	10:00	10:00	11:00		10:00	09:00								10:00
Vol.	8	291	57		3	1								356
PM Peak	13:00	12:00	12:00		13:00	12:00		17:00						12:00
Vol.	4	226	50		3	1		2						279

Location : Union Street South of
Location : Garden Street
City/State: Milford, NH
Counter : 16217
Southbound, Northbound

Accurate Counts
978-664-2565

517840C3
Site Code: 51784003

Start Time	Bikes	Cars & Trailers	2 Axle Long	Buses	2 Axle 6 Tire	3 Axle Single	4 Axle Single	<5 Axl Double	5 Axle Double	>6 Axl Double	<6 Axl Multi	6 Axle Multi	>6 Axl Multi	Total
05/28/06	0	42	2	0	1	0	0	0	0	0	0	0	0	45
01:00	0	28	5	0	0	0	0	0	0	0	0	0	0	33
02:00	0	10	0	0	2	0	0	0	0	0	0	0	0	12
03:00	0	6	2	0	0	0	0	0	0	0	0	0	0	8
04:00	0	7	1	0	0	0	0	0	0	0	0	0	0	8
05:00	0	11	1	0	1	0	0	0	0	0	0	0	0	13
06:00	0	27	8	0	0	0	0	0	0	0	0	0	0	35
07:00	0	70	13	0	0	0	0	0	0	0	0	0	0	83
08:00	0	105	21	0	1	0	0	0	0	0	0	0	0	127
09:00	2	170	**39**	0	**3**	0	0	0	0	0	0	0	0	214
10:00	**3**	150	32	0	3	0	0	**1**	0	0	0	0	0	189
11:00	2	**187**	31	0	1	0	0	0	0	0	0	0	0	**221**
12 PM	1	**161**	**31**	0	1	0	0	0	0	0	0	0	0	**194**
13:00	4	139	24	0	1	0	0	0	0	0	0	0	0	168
14:00	1	155	23	0	0	0	0	0	0	0	0	0	0	179
15:00	2	158	22	0	**2**	**1**	0	**2**	0	0	0	0	0	187
16:00	2	135	24	0	1	0	0	0	0	0	0	0	0	162
17:00	3	130	21	0	1	0	0	0	0	0	0	0	0	155
18:00	3	143	22	0	0	0	0	0	0	0	0	0	0	168
19:00	6	144	17	0	0	0	0	0	0	0	0	**1**	0	168
20:00	4	99	16	0	0	0	0	1	0	0	0	0	0	120
21:00	2	58	7	0	2	0	0	0	0	0	0	0	0	69
22:00	2	30	7	0	0	0	0	0	0	0	0	0	0	39
23:00	**7**	51	3	0	1	0	0	0	0	0	0	0	0	62
Day Total	44	2216	372	0	21	1	0	4	0	0	0	1	0	2659
Percent	1.7%	83.3%	14.0%	0.0%	0.8%	0.0%	0.0%	0.2%	0.0%	0.0%	0.0%	0.0%	0.0%	
AM Peak	10:00	11:00	09:00		09:00			10:00						11:00
Vol.	3	187	39		3			1						221
PM Peak	23:00	12:00	12:00		15:00	15:00		15:00				19:00		12:00
Vol.	7	161	31		2	1		2				1		194

Location : Union Street South of
Location : Garden Street
City/State: Milford, NH
Counter : 16217
Southbound, Northbound

Accurate Counts
978-664-2565

517840C3
Site Code: 51784003

Start Time	Bikes	Cars & Trailers	2 Axle Long	Buses	2 Axle 6 Tire	3 Axle Single	4 Axle Single	<5 Axl Double	5 Axle Double	>6 Axl Double	<6 Axl Multi	6 Axle Multi	>6 Axl Multi	Total
05/29/06	0	33	0	0	0	0	0	0	0	0	0	0	0	33
01:00	0	29	1	0	0	0	0	0	0	0	0	0	0	30
02:00	0	15	0	0	0	0	0	0	0	0	0	0	0	15
03:00	0	21	10	0	**5**	0	0	0	0	0	0	0	0	36
04:00	0	17	1	0	0	0	0	0	0	0	0	0	0	18
05:00	0	20	1	0	0	0	0	0	0	0	0	0	0	21
06:00	0	19	6	0	0	0	0	0	0	0	0	0	0	25
07:00	1	50	12	0	1	0	0	0	0	0	0	0	0	64
08:00	3	83	18	0	1	0	0	**1**	0	0	0	0	0	106
09:00	0	138	34	**1**	0	**1**	0	0	0	0	0	0	0	174
10:00	1	218	**39**	0	1	0	0	0	0	0	0	0	0	259
11:00	**6**	**316**	33	0	1	0	0	0	0	0	0	0	0	**356**
12 PM	0	130	23	0	2	0	0	0	0	0	0	0	0	155
13:00	1	146	25	0	3	0	0	0	0	0	0	0	0	175
14:00	0	134	**40**	0	**5**	0	0	**1**	0	0	0	0	0	180
15:00	1	158	24	0	5	0	0	0	0	0	0	0	0	188
16:00	2	152	27	0	0	0	0	0	0	0	0	0	0	181
17:00	4	153	22	0	0	0	0	0	0	0	0	0	0	179
18:00	2	**160**	28	0	2	0	0	0	0	0	0	0	0	**192**
19:00	**7**	145	19	0	1	0	0	1	0	0	0	0	0	173
20:00	1	114	21	0	1	0	0	0	0	0	0	0	0	137
21:00	3	94	12	0	0	0	0	0	0	0	0	0	0	109
22:00	0	47	6	0	0	**2**	0	0	0	0	0	0	0	55
23:00	1	41	1	0	0	0	0	0	0	0	0	0	0	43
Day Total	33	2433	403	1	28	3	0	3	0	0	0	0	0	2904
Percent	1.1%	83.8%	13.9%	0.0%	1.0%	0.1%	0.0%	0.1%	0.0%	0.0%	0.0%	0.0%	0.0%	
AM Peak	11:00	11:00	10:00	09:00	03:00	09:00		08:00						11:00
Vol.	6	316	39	1	5	1		1						356
PM Peak	19:00	18:00	14:00		14:00	22:00		14:00						18:00
Vol.	7	160	40		5	2		1						192

Location : Union Street South of
Location : Garden Street
City/State: Milford, NH
Counter : 16217
Southbound, Northbound

Accurate Counts
978-664-2565

517840C3
Site Code: 51784003

Start Time	Bikes	Cars & Trailers	2 Axle Long	Buses	2 Axle 6 Tire	3 Axle Single	4 Axle Single	<5 Axl Double	5 Axle Double	>6 Axl Double	<6 Axl Multi	6 Axle Multi	>6 Axl Multi	Total
05/30/06	0	22	0	0	0	0	0	0	0	0	0	0	0	22
01:00	0	9	0	0	0	0	0	0	0	0	0	0	0	9
02:00	0	12	0	0	0	0	0	0	0	0	0	0	0	12
03:00	0	6	1	0	0	0	0	0	0	0	0	0	0	7
04:00	0	9	4	0	0	1	0	0	0	0	0	0	0	14
05:00	0	31	12	0	1	0	0	0	0	0	0	0	0	44
06:00	1	102	32	1	3	0	0	0	0	0	0	0	0	139
07:00	0	**295**	**66**	3	**8**	**3**	0	2	0	0	0	0	0	**377**
08:00	1	240	41	**18**	5	2	0	0	0	0	0	0	0	307
09:00	**4**	184	49	0	5	1	0	0	0	0	0	0	0	243
10:00	3	213	37	0	6	0	0	**4**	0	0	0	0	0	263
11:00	0	193	39	0	5	1	0	1	0	0	0	0	0	239
12 PM	0	213	58	0	7	**2**	0	**2**	0	0	0	0	0	282
13:00	0	182	38	1	8	1	0	0	0	0	0	0	0	230
14:00	4	312	60	4	**9**	1	0	1	0	0	0	0	0	391
15:00	2	277	66	**5**	9	0	0	0	0	0	0	0	0	359
16:00	4	293	46	1	4	2	0	0	0	0	0	0	0	350
17:00	**6**	**329**	**80**	0	6	1	0	0	0	0	0	0	0	**422**
18:00	1	254	54	0	1	1	0	0	0	0	0	0	0	311
19:00	2	247	29	1	1	0	0	1	0	0	0	0	0	281
20:00	2	174	10	0	1	0	0	0	0	0	0	0	0	187
21:00	1	87	13	0	0	0	0	0	0	0	0	0	0	101
22:00	1	44	3	0	1	0	0	0	0	0	0	0	0	49
23:00	0	31	2	0	0	0	0	0	0	0	0	0	0	33
Day Total	32	3759	740	34	80	16	0	11	0	0	0	0	0	4672
Percent	0.7%	80.5%	15.8%	0.7%	1.7%	0.3%	0.0%	0.2%	0.0%	0.0%	0.0%	0.0%	0.0%	
AM Peak	09:00	07:00	07:00	08:00	07:00	07:00		10:00						07:00
Vol.	4	295	66	18	8	3		4						377
PM Peak	17:00	17:00	17:00	15:00	14:00	12:00		12:00						17:00
Vol.	6	329	80	5	9	2		2						422

Location : Union Street South of
Location : Garden Street
City/State: Milford, NH
Counter : 16217
Southbound, Northbound

Accurate Counts
978-664-2565

517840C3
Site Code: 51784003

Start Time	Bikes	Cars & Trailers	2 Axle Long	Buses	2 Axle 6 Tire	3 Axle Single	4 Axle Single	<5 Axl Double	5 Axle Double	>6 Axl Double	<6 Axl Multi	6 Axle Multi	>6 Axl Multi	Total
05/31/06	0	15	3	0	0	0	0	0	0	0	0	0	0	18
01:00	0	12	0	0	0	0	0	0	0	0	0	0	0	12
02:00	0	4	0	0	0	0	0	0	0	0	0	0	0	4
03:00	0	4	1	0	0	0	0	0	0	0	0	0	0	5
04:00	0	8	2	0	0	0	0	0	0	0	0	0	0	10
05:00	1	37	12	0	3	0	0	0	0	0	0	0	0	53
06:00	1	110	37	1	2	1	0	**1**	0	0	0	0	0	153
07:00	2	**318**	**61**	8	5	1	**2**	1	0	0	0	0	0	**398**
08:00	**4**	239	46	**19**	6	1	1	1	0	0	0	0	0	317
09:00	2	183	49	0	**8**	0	1	0	0	0	0	0	0	243
10:00	3	157	30	1	3	**2**	2	1	0	0	0	0	0	199
11:00	0	187	37	2	3	1	0	0	**1**	0	0	0	0	231
12 PM	0	216	38	0	5	1	**1**	0	0	0	0	0	0	261
13:00	0	232	36	0	6	**4**	1	0	**1**	0	0	0	0	280
14:00	2	341	52	3	3	1	0	**2**	1	0	0	0	0	405
15:00	4	**370**	62	**5**	**7**	1	0	1	0	0	0	0	0	**450**
16:00	3	311	64	4	7	1	0	1	1	0	0	0	0	392
17:00	4	335	**77**	0	2	0	0	0	0	0	0	0	0	418
18:00	3	289	46	0	1	0	0	1	0	0	0	0	0	340
19:00	**6**	221	33	0	1	0	0	0	0	0	**1**	0	0	262
20:00	5	200	21	0	2	0	0	0	0	0	0	0	0	228
21:00	5	140	21	0	0	0	0	0	0	0	0	0	0	166
22:00	1	53	4	0	0	0	0	0	0	0	0	0	0	58
23:00	0	35	2	0	1	0	0	0	0	0	0	0	0	38
Day Total	46	4017	734	43	65	14	8	9	4	0	1	0	0	4941
Percent	0.9%	81.3%	14.9%	0.9%	1.3%	0.3%	0.2%	0.2%	0.1%	0.0%	0.0%	0.0%	0.0%	
AM Peak	08:00	07:00	07:00	08:00	09:00	10:00	07:00	06:00	11:00					07:00
Vol.	4	318	61	19	8	2	2	1	1					398
PM Peak	19:00	15:00	17:00	15:00	15:00	13:00	12:00	14:00	13:00		19:00			15:00
Vol.	6	370	77	5	7	4	1	2	1		1			450

Location : Union Street South of
Location : Garden Street
City/State: Milford, NH
Counter : 16217
Southbound, Northbound

Accurate Counts
978-664-2565

517840C3
Site Code: 51784003

Start Time	Bikes	Cars & Trailers	2 Axle Long	Buses	2 Axle 6 Tire	3 Axle Single	4 Axle Single	<5 Axl Double	5 Axle Double	>6 Axl Double	<6 Axl Multi	6 Axle Multi	>6 Axl Multi	Total
06/01/06	0	13	1	0	0	0	0	0	0	0	0	0	0	14
01:00	2	13	0	0	0	0	0	0	0	0	0	0	0	15
02:00	0	7	1	0	0	0	0	0	0	0	0	0	0	8
03:00	0	5	1	0	0	0	0	0	0	0	0	0	0	6
04:00	0	9	4	0	0	1	0	0	0	0	0	0	0	14
05:00	0	40	19	0	2	0	0	0	0	0	0	0	0	61
06:00	0	103	35	1	2	1	0	0	0	0	0	0	0	142
07:00	1	**318**	51	3	3	1	0	1	**1**	0	0	0	0	**379**
08:00	1	235	**56**	**15**	**9**	**3**	0	**3**	0	**1**	0	0	0	323
09:00	3	189	36	0	4	1	0	1	0	0	0	0	0	234
10:00	2	173	31	0	0	0	0	0	0	0	0	0	0	206
11:00	**4**	161	38	0	4	3	0	0	0	0	0	0	0	210
12 PM	1	233	41	0	4	0	0	1	0	0	0	0	0	280
13:00	2	253	35	1	2	**1**	0	1	0	0	0	0	0	295
14:00	1	**356**	53	4	7	0	0	**3**	0	0	0	0	0	**424**
15:00	1	299	41	2	5	0	0	0	0	0	0	0	0	348
16:00	4	338	48	1	4	0	0	1	0	0	0	0	0	396
17:00	2	355	**54**	0	1	1	0	0	0	0	0	0	0	413
18:00	36	328	48	0	1	0	0	0	**1**	0	0	0	0	414
19:00	**42**	235	36	0	2	1	0	1	0	0	0	0	0	317
20:00	6	211	42	**15**	**25**	1	0	0	0	0	0	0	0	300
21:00	1	105	29	5	12	1	0	0	0	0	0	0	0	153
22:00	2	51	11	1	7	0	0	0	0	0	0	0	0	72
23:00	1	26	6	0	5	0	0	0	0	0	0	0	0	38
Day Total	112	4056	717	48	99	15	0	12	2	1	0	0	0	5062
Percent	2.2%	80.1%	14.2%	0.9%	2.0%	0.3%	0.0%	0.2%	0.0%	0.0%	0.0%	0.0%	0.0%	
AM Peak	11:00	07:00	08:00	08:00	08:00	08:00		08:00	07:00	08:00				07:00
Vol.	4	318	56	15	9	3		3	1	1				379
PM Peak	19:00	14:00	17:00	20:00	20:00	13:00		14:00	18:00					14:00
Vol.	42	356	54	15	25	1		3	1					424

Location : Union Street South of
Location : Garden Street
City/State: Milford, NH
Counter : 16217
Southbound, Northbound

Accurate Counts
978-664-2565

517840C3
Site Code: 51784003

Start Time	Bikes	Cars & Trailers	2 Axle Long	Buses	2 Axle 6 Tire	3 Axle Single	4 Axle Single	<5 Axl Double	5 Axle Double	>6 Axl Double	<6 Axl Multi	6 Axle Multi	>6 Axl Multi	Total
06/02/06	0	20	6	0	3	0	0	0	0	0	0	0	0	29
01:00	0	11	0	0	0	0	0	0	0	0	0	0	0	11
02:00	1	6	1	0	1	0	0	0	0	0	0	0	0	9
03:00	0	9	1	0	0	0	0	0	0	0	0	0	0	10
04:00	0	8	4	0	0	0	0	0	0	0	0	0	0	12
05:00	0	22	14	0	0	0	0	0	0	0	0	0	0	36
06:00	2	89	28	3	7	0	0	0	0	0	0	0	0	129
07:00	**5**	**287**	**67**	2	**16**	0	0	0	0	**1**	0	0	0	**378**
08:00	1	271	64	**10**	6	**2**	0	**3**	0	0	0	0	0	357
09:00	4	201	36	4	4	0	0	0	0	0	0	0	0	249
10:00	2	160	29	2	2	0	0	0	0	0	0	0	0	195
11:00	4	204	37	4	4	0	0	0	0	0	0	0	0	253
12 PM	**4**	222	40	**4**	**4**	0	0	0	0	0	0	0	0	274
13:00	3	194	35	3	3	0	0	0	0	0	0	0	0	238
14:00	4	**298**	**54**	4	4	0	0	0	0	0	0	0	0	**364**
15:00	4	281	52	4	4	0	0	0	0	0	0	0	0	345
16:00	4	281	51	4	4	0	0	0	0	0	0	0	0	344
17:00	4	263	48	4	4	0	0	0	0	0	0	0	0	323
18:00	3	195	35	3	3	0	0	0	0	0	0	0	0	239
19:00	1	146	27	1	1	0	0	0	0	0	0	0	0	176
20:00	0	112	20	0	0	0	0	0	0	0	0	0	0	132
21:00	0	74	14	0	0	0	0	0	0	0	0	0	0	88
22:00	0	61	11	0	0	0	0	0	0	0	0	0	0	72
23:00	0	71	14	0	0	0	0	0	0	0	0	0	0	85
Day Total	46	3486	688	52	70	2	0	3	0	1	0	0	0	4348
Percent	1.1%	80.2%	15.8%	1.2%	1.6%	0.0%	0.0%	0.1%	0.0%	0.0%	0.0%	0.0%	0.0%	
AM Peak	07:00	07:00	07:00	08:00	07:00	08:00		08:00		07:00				07:00
Vol.	5	287	67	10	16	2		3		1				378
PM Peak	12:00	14:00	14:00	12:00	12:00									14:00
Vol.	4	298	54	4	4									364

Location : Union Street South of
Location : Garden Street
City/State: Milford, NH
Counter : 16217
Southbound, Northbound

Accurate Counts
978-664-2565

517840C3
Site Code: 51784003

Start Time	Bikes	Cars & Trailers	2 Axle Long	Buses	2 Axle 6 Tire	3 Axle Single	4 Axle Single	<5 Axl Double	5 Axle Double	>6 Axl Double	<6 Axl Multi	6 Axle Multi	>6 Axl Multi	Total
06/03/06	0	27	5	0	0	0	0	0	0	0	0	0	0	32
01:00	0	22	4	0	0	0	0	0	0	0	0	0	0	26
02:00	0	15	3	0	0	0	0	0	0	0	0	0	0	18
03:00	0	10	2	0	0	0	0	0	0	0	0	0	0	12
04:00	0	7	1	0	0	0	0	0	0	0	0	0	0	8
05:00	0	22	3	0	0	0	0	0	0	0	0	0	0	25
06:00	0	35	7	0	0	0	0	0	0	0	0	0	0	42
07:00	0	89	16	0	0	0	0	0	0	0	0	0	0	105
08:00	0	129	24	0	0	0	0	0	0	0	0	0	0	153
09:00	3	197	36	3	3	0	0	0	0	0	0	0	0	242
10:00	**4**	238	43	**4**	**4**	0	0	0	0	0	0	0	0	293
11:00	4	**255**	**47**	4	4	0	0	0	0	0	0	0	0	**314**
12 PM	**4**	**241**	**44**	**4**	**4**	0	0	0	0	0	0	0	0	**297**
13:00	4	191	36	4	4	0	0	0	0	0	0	0	0	239
14:00	0	138	25	0	0	0	0	0	0	0	0	0	0	163
15:00	4	185	34	4	4	0	0	0	0	0	0	0	0	231
16:00	0	139	26	0	0	0	0	0	0	0	0	0	0	165
17:00	1	143	26	1	1	0	0	0	0	0	0	0	0	172
18:00	0	141	26	0	0	0	0	0	0	0	0	0	0	167
19:00	0	105	18	0	0	0	0	0	0	0	0	0	0	123
20:00	0	99	18	0	0	0	0	0	0	0	0	0	0	117
21:00	0	92	17	0	0	0	0	0	0	0	0	0	0	109
22:00	0	64	12	0	0	0	0	0	0	0	0	0	0	76
23:00	0	34	6	0	0	0	0	0	0	0	0	0	0	40
Day Total	24	2618	479	24	24	0	0	0	0	0	0	0	0	3169
Percent	0.8%	82.6%	15.1%	0.8%	0.8%	0.0%	0.0%	0.0%	0.0%	0.0%	0.0%	0.0%	0.0%	
AM Peak	10:00	11:00	11:00	10:00	10:00									11:00
Vol.	4	255	47	4	4									314
PM Peak	12:00	12:00	12:00	12:00	12:00									12:00
Vol.	4	241	44	4	4									297

Location : Union Street South of
Location : Garden Street
City/State: Milford, NH
Counter : 16217
Southbound, Northbound

Accurate Counts
978-664-2565

517840C3
Site Code: 51784003

Start Time	Bikes	Cars & Trailers	2 Axle Long	Buses	2 Axle 6 Tire	3 Axle Single	4 Axle Single	<5 Axl Double	5 Axle Double	>6 Axl Double	<6 Axl Multi	6 Axle Multi	>6 Axl Multi	Total
06/04/06	0	31	6	0	0	0	0	0	0	0	0	0	0	37
01:00	0	16	3	0	0	0	0	0	0	0	0	0	0	19
02:00	0	12	2	0	0	0	0	0	0	0	0	0	0	14
03:00	0	6	0	0	0	0	0	0	0	0	0	0	0	6
04:00	0	5	0	0	0	0	0	0	0	0	0	0	0	5
05:00	0	14	2	0	0	0	0	0	0	0	0	0	0	16
06:00	0	34	7	0	0	0	0	0	0	0	0	0	0	41
07:00	0	59	11	0	0	0	0	0	0	0	0	0	0	70
08:00	0	100	19	0	0	0	0	0	0	0	0	0	0	119
09:00	**1**	**152**	**28**	**1**	**1**	0	0	0	0	0	0	0	0	**183**
10:00	1	151	27	1	1	0	0	0	0	0	0	0	0	181
11:00	1	149	27	1	1	0	0	0	0	0	0	0	0	179
12 PM	**3**	192	**37**	**3**	**3**	0	0	0	0	0	0	0	0	238
13:00	3	**194**	36	3	3	0	0	0	0	0	0	0	0	**239**
14:00	2	161	29	2	2	0	0	0	0	0	0	0	0	196
15:00	2	163	30	2	2	0	0	0	0	0	0	0	0	199
16:00	1	159	29	1	1	0	0	0	0	0	0	0	0	191
17:00	1	156	29	1	1	0	0	0	0	0	0	0	0	188
18:00	0	132	24	0	0	0	0	0	0	0	0	0	0	156
19:00	0	132	23	0	0	0	0	0	0	0	0	0	0	155
20:00	0	104	19	0	0	0	0	0	0	0	0	0	0	123
21:00	0	70	13	0	0	0	0	0	0	0	0	0	0	83
22:00	0	39	8	0	0	0	0	0	0	0	0	0	0	47
23:00	0	29	6	0	0	0	0	0	0	0	0	0	0	35
Day Total	15	2260	415	15	15	0	0	0	0	0	0	0	0	2720
Percent	0.6%	83.1%	15.3%	0.6%	0.6%	0.0%	0.0%	0.0%	0.0%	0.0%	0.0%	0.0%	0.0%	
AM Peak	09:00	09:00	09:00	09:00	09:00									09:00
Vol.	1	152	28	1	1									183
PM Peak	12:00	13:00	12:00	12:00	12:00									13:00
Vol.	3	194	37	3	3									239

Location : Union Street South of
Location : Garden Street
City/State: Milford, NH
Counter : 16217
Southbound, Northbound

Accurate Counts
978-664-2565

517840C3
Site Code: 51784003

Start Time	Bikes	Cars & Trailers	2 Axle Long	Buses	2 Axle 6 Tire	3 Axle Single	4 Axle Single	<5 Axl Double	5 Axle Double	>6 Axl Double	<6 Axl Multi	6 Axle Multi	>6 Axl Multi	Total
06/05/06	0	17	3	0	0	0	0	0	0	0	0	0	0	20
01:00	0	6	1	0	0	0	0	0	0	0	0	0	0	7
02:00	0	3	0	0	0	0	0	0	0	0	0	0	0	3
03:00	0	9	2	0	0	0	0	0	0	0	0	0	0	11
04:00	0	10	1	0	0	0	0	0	0	0	0	0	0	11
05:00	0	**33**	**6**	0	0	0	0	0	0	0	0	0	0	**39**
06:00	*	*	*	*	*	*	*	*	*	*	*	*	*	*
07:00	*	*	*	*	*	*	*	*	*	*	*	*	*	*
08:00	*	*	*	*	*	*	*	*	*	*	*	*	*	*
09:00	*	*	*	*	*	*	*	*	*	*	*	*	*	*
10:00	*	*	*	*	*	*	*	*	*	*	*	*	*	*
11:00	*	*	*	*	*	*	*	*	*	*	*	*	*	*
12 PM	*	*	*	*	*	*	*	*	*	*	*	*	*	*
13:00	*	*	*	*	*	*	*	*	*	*	*	*	*	*
14:00	*	*	*	*	*	*	*	*	*	*	*	*	*	*
15:00	*	*	*	*	*	*	*	*	*	*	*	*	*	*
16:00	*	*	*	*	*	*	*	*	*	*	*	*	*	*
17:00	*	*	*	*	*	*	*	*	*	*	*	*	*	*
18:00	*	*	*	*	*	*	*	*	*	*	*	*	*	*
19:00	*	*	*	*	*	*	*	*	*	*	*	*	*	*
20:00	*	*	*	*	*	*	*	*	*	*	*	*	*	*
21:00	*	*	*	*	*	*	*	*	*	*	*	*	*	*
22:00	*	*	*	*	*	*	*	*	*	*	*	*	*	*
23:00	*	*	*	*	*	*	*	*	*	*	*	*	*	*
Day Total	0	78	13	0	0	0	0	0	0	0	0	0	0	91
Percent	0.0%	85.7%	14.3%	0.0%	0.0%	0.0%	0.0%	0.0%	0.0%	0.0%	0.0%	0.0%	0.0%	
AM Peak		05:00	05:00											05:00
Vol.		33	6											39
PM Peak														
Vol.														
Grand Total	731	59583	10606	443	875	191	11	122	31	38	1	1	1	72634
Percent	1.0%	82.0%	14.6%	0.6%	1.2%	0.3%	0.0%	0.2%	0.0%	0.1%	0.0%	0.0%	0.0%	

Attachment E

Projected (2009) Capacity Analyses

Attachment E-1

Projected (2009) Existing Weekday Morning Capacity Analysis (Intersections Along Primary Truck Route)

Lane Group	EBL	EBT	EBR	WBL	WBT	WBR	NBL	NBT	NBR	SBL	SBT	SBR
Lane Configurations												
Ideal Flow (vphpl)	1900	1900	1900	1900	1900	1900	1900	1900	1900	1900	1900	1900
Lane Width (ft)	12	12	16	11	12	11	12	12	16	13	13	12
Storage Length (ft)	205		360	250		250	300		380	100		0
Storage Lanes	1		1	1		1	1		1	1		0
Total Lost Time (s)	4.0	4.0	4.0	4.0	4.0	4.0	4.0	4.0	4.0	4.0	4.0	4.0
Leading Detector (ft)	50	50	50	50	50	50	50	50	50	50	50	
Trailing Detector (ft)	0	0	0	0	0	0	0	0	0	0	0	
Turning Speed (mph)	15		9	15		9	15		9	15		9
Lane Util. Factor	1.00	1.00	1.00	1.00	1.00	1.00	0.95	0.95	1.00	1.00	1.00	1.00
Frt			0.850			0.850			0.850		0.951	
Flt Protected	0.950			0.950			0.950	0.960		0.950		
Satd. Flow (prot)	1719	1810	1743	1601	1743	1432	1517	1533	1620	1829	1831	0
Flt Permitted	0.950			0.950			0.950	0.960		0.950		
Satd. Flow (perm)	1719	1810	1743	1601	1743	1432	1517	1533	1620	1829	1831	0
Right Turn on Red			Yes			Yes			Yes			Yes
Satd. Flow (RTOR)			894			35			18		14	
Headway Factor	1.00	1.00	0.85	1.04	1.00	1.04	1.00	1.00	0.85	0.96	0.96	1.00
Link Speed (mph)		35			35			55			55	
Link Distance (ft)		1162			2231			521			369	
Travel Time (s)		22.6			43.5			6.5			4.6	
Volume (vph)	45	287	931	25	198	29	467	41	17	95	139	68
Peak Hour Factor	0.93	0.93	0.93	0.84	0.84	0.84	0.95	0.95	0.95	0.93	0.93	0.93
Heavy Vehicles (%)	5%	5%	5%	9%	9%	9%	13%	13%	13%	2%	2%	2%
Adj. Flow (vph)	48	309	1001	30	236	35	492	43	18	102	149	73
Lane Group Flow (vph)	48	309	1001	30	236	35	261	274	18	102	222	0
Turn Type	Prot		Perm	Prot		Perm	Split		Perm	Split		
Protected Phases	5	2		1	6		4	4		8	8	
Permitted Phases			2			6			4			
Detector Phases	5	2	2	1	6	6	4	4	4	8	8	
Minimum Initial (s)	5.0	5.0	5.0	5.0	5.0	5.0	5.0	5.0	5.0	5.0	5.0	
Minimum Split (s)	11.0	11.0	11.0	11.0	11.0	11.0	11.0	11.0	11.0	11.0	11.0	
Total Split (s)	21.0	36.0	36.0	21.0	36.0	36.0	66.0	66.0	66.0	21.0	21.0	0.0
Total Split (%)	14.6%	25.0%	25.0%	14.6%	25.0%	25.0%	45.8%	45.8%	45.8%	14.6%	14.6%	0.0%
Maximum Green (s)	15.0	30.0	30.0	15.0	30.0	30.0	60.0	60.0	60.0	15.0	15.0	
Yellow Time (s)	4.0	4.0	4.0	4.0	4.0	4.0	4.0	4.0	4.0	4.0	4.0	
All-Red Time (s)	2.0	2.0	2.0	2.0	2.0	2.0	2.0	2.0	2.0	2.0	2.0	
Lead/Lag	Lead	Lag	Lag	Lead	Lag	Lag						
Lead-Lag Optimize?	Yes	Yes	Yes	Yes	Yes	Yes						
Vehicle Extension (s)	4.0	4.0	4.0	4.0	4.0	4.0	4.0	4.0	4.0	4.0	4.0	
Recall Mode	None	Min	Min	None	Min	Min	None	None	None	None	None	
Act Effct Green (s)	11.3	27.0	27.0	10.6	26.4	26.4	24.5	24.5	24.5	18.0	18.0	
Actuated g/C Ratio	0.12	0.30	0.30	0.11	0.29	0.29	0.27	0.27	0.27	0.20	0.20	
v/c Ratio	0.24	0.57	0.87	0.17	0.46	0.08	0.64	0.66	0.04	0.28	0.59	
Control Delay	45.0	33.2	12.6	45.6	32.3	10.9	32.4	32.6	11.8	41.8	44.2	
Queue Delay	0.0	0.0	0.0	0.0	0.0	0.0	0.0	0.0	0.0	0.0	0.0	
Total Delay	45.0	33.2	12.6	45.6	32.3	10.9	32.4	32.6	11.8	41.8	44.2	
LOS	D	C	B	D	C	B	C	C	B	D	D	
Approach Delay		18.4			31.1			31.8			43.4	

Lane Group	EBL	EBT	EBR	WBL	WBT	WBR	NBL	NBT	NBR	SBL	SBT	SBR
Approach LOS		B			C			C			D	
Queue Length 50th (ft)	29	166	51	18	123	0	160	169	0	59	130	
Queue Length 95th (ft)	72	304	#413	48	217	23	258	271	17	128	#282	
Internal Link Dist (ft)		1082			2151			441			289	
Turn Bay Length (ft)	205		360	250		250	300		380	100		
Base Capacity (vph)	297	631	1190	275	603	518	752	760	812	372	384	
Starvation Cap Reductn	0	0	0	0	0	0	0	0	0	0	0	
Spillback Cap Reductn	0	0	0	0	0	0	0	0	0	0	0	
Storage Cap Reductn	0	0	0	0	0	0	0	0	0	0	0	
Reduced v/c Ratio	0.16	0.49	0.84	0.11	0.39	0.07	0.35	0.36	0.02	0.27	0.58	

Intersection Summary

Area Type: Other
Cycle Length: 144
Actuated Cycle Length: 90.3
Natural Cycle: 90
Control Type: Actuated-Uncoordinated
Maximum v/c Ratio: 0.87
Intersection Signal Delay: 26.0 Intersection LOS: C
Intersection Capacity Utilization 83.3% ICU Level of Service E
Analysis Period (min) 15
95th percentile volume exceeds capacity, queue may be longer.
Queue shown is maximum after two cycles.

Splits and Phases: 7: Elm Street & NH Route 101

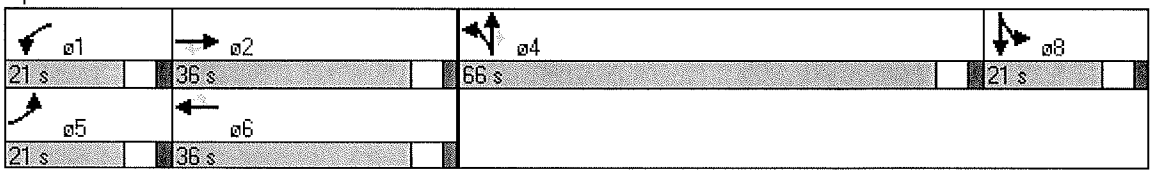

Movement	EBT	EBR	WBL	WBT	NEL	NER
Lane Configurations						
Sign Control	Free			Free	Stop	
Grade	0%			0%	0%	
Volume (veh/h)	359	7	90	219	2	80
Peak Hour Factor	0.78	0.78	0.75	0.75	0.84	0.84
Hourly flow rate (vph)	460	9	120	292	2	95
Pedestrians						
Lane Width (ft)						
Walking Speed (ft/s)						
Percent Blockage						
Right turn flare (veh)						
Median type					None	
Median storage veh)						
Upstream signal (ft)						
pX, platoon unblocked						
vC, conflicting volume			469		997	465
vC1, stage 1 conf vol						
vC2, stage 2 conf vol						
vCu, unblocked vol			469		997	465
tC, single (s)			4.2		6.4	6.2
tC, 2 stage (s)						
tF (s)			2.3		3.5	3.3
p0 queue free %			89		99	84
cM capacity (veh/h)			1062		238	593

Direction, Lane #	EB 1	WB 1	WB 2	NE 1
Volume Total	469	120	292	98
Volume Left	0	120	0	2
Volume Right	9	0	0	95
cSH	1700	1062	1700	573
Volume to Capacity	0.28	0.11	0.17	0.17
Queue Length 95th (ft)	0	10	0	15
Control Delay (s)	0.0	8.8	0.0	12.6
Lane LOS		A		B
Approach Delay (s)	0.0	2.6		12.6
Approach LOS				B

Intersection Summary			
Average Delay	2.3		
Intersection Capacity Utilization	39.4%	ICU Level of Service	A
Analysis Period (min)	15		

Lane Group	EBT	EBR	WBL	WBT	NBL	NBR	ø9
Lane Configurations							
Ideal Flow (vphpl)	1900	1900	1900	1900	1900	1900	
Lane Width (ft)	12	12	11	14	11	12	
Storage Length (ft)		100	150		150	0	
Storage Lanes		1	1		1	1	
Total Lost Time (s)	4.0	4.0	4.0	4.0	4.0	4.0	
Leading Detector (ft)	50	50	50	50	50	50	
Trailing Detector (ft)	0	0	0	0	0	0	
Turning Speed (mph)		9	15		15	9	
Lane Util. Factor	1.00	1.00	1.00	1.00	1.00	1.00	
Frt		0.850				0.850	
Flt Protected			0.950		0.950		
Satd. Flow (prot)	1792	1524	1646	1912	1678	1553	
Flt Permitted			0.950		0.950		
Satd. Flow (perm)	1792	1524	1646	1912	1678	1553	
Right Turn on Red		Yes				Yes	
Satd. Flow (RTOR)		55				297	
Headway Factor	1.00	1.00	1.04	0.92	1.04	1.00	
Link Speed (mph)	30			30	25		
Link Distance (ft)	2984			380	539		
Travel Time (s)	67.8			8.6	14.7		
Volume (vph)	427	90	113	379	147	205	
Peak Hour Factor	0.92	0.92	0.93	0.93	0.69	0.69	
Heavy Vehicles (%)	6%	6%	6%	6%	4%	4%	
Adj. Flow (vph)	464	98	122	408	213	297	
Lane Group Flow (vph)	464	98	122	408	213	297	
Turn Type		Perm	Prot			Prot	
Protected Phases	2		1	6	8	8	9
Permitted Phases		2					
Detector Phases	2	2	1	6	8	8	
Minimum Initial (s)	4.0	4.0	4.0	4.0	4.0	4.0	5.0
Minimum Split (s)	22.0	22.0	10.0	22.0	22.0	22.0	21.0
Total Split (s)	40.0	40.0	20.0	60.0	24.0	24.0	21.0
Total Split (%)	38.1%	38.1%	19.0%	57.1%	22.9%	22.9%	20%
Maximum Green (s)	34.0	34.0	15.0	54.0	20.0	20.0	18.0
Yellow Time (s)	4.0	4.0	3.0	4.0	3.0	3.0	3.0
All-Red Time (s)	2.0	2.0	2.0	2.0	1.0	1.0	0.0
Lead/Lag	Lag	Lag	Lead				
Lead-Lag Optimize?	Yes	Yes	Yes				
Vehicle Extension (s)	3.0	3.0	3.0	3.0	3.0	3.0	3.0
Recall Mode	None	None	None	None	Min	Min	None
Walk Time (s)							12.0
Flash Dont Walk (s)							6.0
Pedestrian Calls (#/hr)							0
Act Effct Green (s)	22.5	22.5	10.9	33.8	12.9	12.9	
Actuated g/C Ratio	0.40	0.40	0.19	0.60	0.23	0.23	
v/c Ratio	0.65	0.15	0.40	0.36	0.55	0.51	
Control Delay	17.8	7.6	27.4	6.0	25.5	5.6	
Queue Delay	0.0	0.0	0.0	0.0	0.0	0.0	

Lane Group	EBT	EBR	WBL	WBT	NBL	NBR	ø9
Total Delay	17.8	7.6	27.4	6.0	25.5	5.6	
LOS	B	A	C	A	C	A	
Approach Delay	16.1			10.9	13.9		
Approach LOS	B			B	B		
Queue Length 50th (ft)	125	9	36	52	64	0	
Queue Length 95th (ft)	281	42	108	122	121	15	
Internal Link Dist (ft)	2904			300	459		
Turn Bay Length (ft)		100	150		150		
Base Capacity (vph)	955	838	436	1397	570	723	
Starvation Cap Reductn	0	0	0	0	0	0	
Spillback Cap Reductn	0	0	0	0	0	0	
Storage Cap Reductn	0	0	0	0	0	0	
Reduced v/c Ratio	0.49	0.12	0.28	0.29	0.37	0.41	

Intersection Summary

Area Type: Other
Cycle Length: 105
Actuated Cycle Length: 56.4
Natural Cycle: 80
Control Type: Actuated-Uncoordinated
Maximum v/c Ratio: 0.65
Intersection Signal Delay: 13.7 Intersection LOS: B
Intersection Capacity Utilization 46.9% ICU Level of Service A
Analysis Period (min) 15

Splits and Phases: 26: Elm Street & West Street

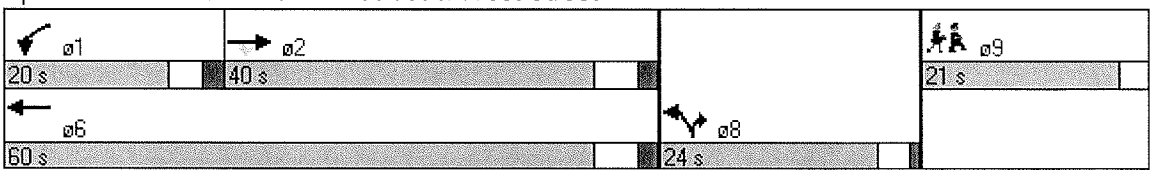

Movement	EBL	EBT	EBR	WBL	WBT	WBR	NBL	NBT	NBR	SBL	SBT	SBR
Lane Configurations												
Sign Control		Stop			Stop			Free			Free	
Grade		0%			0%			0%			0%	
Volume (veh/h)	10	7	24	19	3	13	12	272	49	27	278	6
Peak Hour Factor	0.92	0.92	0.92	0.92	0.92	0.92	0.92	0.92	0.92	0.92	0.92	0.92
Hourly flow rate (vph)	11	8	26	21	3	14	13	296	53	29	302	7
Pedestrians												
Lane Width (ft)												
Walking Speed (ft/s)												
Percent Blockage												
Right turn flare (veh)												
Median type		None			None							
Median storage veh)												
Upstream signal (ft)											539	
pX, platoon unblocked												
vC, conflicting volume	728	739	305	742	716	322	309			349		
vC1, stage 1 conf vol												
vC2, stage 2 conf vol												
vCu, unblocked vol	728	739	305	742	716	322	309			349		
tC, single (s)	7.1	6.5	6.2	7.1	6.5	6.2	4.1			4.1		
tC, 2 stage (s)												
tF (s)	3.5	4.0	3.3	3.5	4.0	3.3	2.2			2.2		
p0 queue free %	97	98	96	93	99	98	99			98		
cM capacity (veh/h)	321	333	734	306	344	719	1252			1210		

Direction, Lane #	EB 1	WB 1	NB 1	SB 1
Volume Total	45	38	362	338
Volume Left	11	21	13	29
Volume Right	26	14	53	7
cSH	483	394	1252	1210
Volume to Capacity	0.09	0.10	0.01	0.02
Queue Length 95th (ft)	8	8	1	2
Control Delay (s)	13.2	15.1	0.4	0.9
Lane LOS	B	C	A	A
Approach Delay (s)	13.2	15.1	0.4	0.9
Approach LOS	B	C		

Intersection Summary			
Average Delay	2.1		
Intersection Capacity Utilization	37.0%	ICU Level of Service	A
Analysis Period (min)	15		

Attachment E-2

Projected (2009) Existing Weekday Afternoon Capacity Analysis (Intersections Along Primary Truck Route)

Lane Group	EBL	EBT	EBR	WBL	WBT	WBR	NBL	NBT	NBR	SBL	SBT	SBR
Lane Configurations												
Ideal Flow (vphpl)	1900	1900	1900	1900	1900	1900	1900	1900	1900	1900	1900	1900
Lane Width (ft)	12	12	16	11	12	11	12	12	16	13	13	12
Storage Length (ft)	205		360	250		250	300		380	100		0
Storage Lanes	1		1	1		1	1		1	1		0
Total Lost Time (s)	4.0	4.0	4.0	4.0	4.0	4.0	4.0	4.0	4.0	4.0	4.0	4.0
Leading Detector (ft)	50	50	50	50	50	50	50	50	50	50	50	
Trailing Detector (ft)	0	0	0	0	0	0	0	0	0	0	0	
Turning Speed (mph)	15		9	15		9	15		9	15		9
Lane Util. Factor	1.00	1.00	1.00	1.00	1.00	1.00	0.95	0.95	1.00	1.00	1.00	1.00
Frt			0.850			0.850			0.850		0.937	
Flt Protected	0.950			0.950			0.950	0.964		0.950		
Satd. Flow (prot)	1736	1827	1760	1711	1863	1531	1665	1689	1777	1829	1804	0
Flt Permitted	0.950			0.950			0.950	0.964		0.950		
Satd. Flow (perm)	1736	1827	1760	1711	1863	1531	1665	1689	1777	1829	1804	0
Right Turn on Red			Yes			Yes			Yes			Yes
Satd. Flow (RTOR)			628			89			27		21	
Headway Factor	1.00	1.00	0.85	1.04	1.00	1.04	1.00	1.00	0.85	0.96	0.96	1.00
Link Speed (mph)		35			35			55			55	
Link Distance (ft)		1162			2231			521			369	
Travel Time (s)		22.6			43.5			6.5			4.6	
Volume (vph)	48	203	559	34	300	82	915	135	25	32	68	49
Peak Hour Factor	0.89	0.89	0.89	0.92	0.92	0.92	0.87	0.87	0.87	0.68	0.68	0.68
Heavy Vehicles (%)	4%	4%	4%	2%	2%	2%	3%	3%	3%	2%	2%	2%
Adj. Flow (vph)	54	228	628	37	326	89	1052	155	29	47	100	72
Lane Group Flow (vph)	54	228	628	37	326	89	588	619	29	47	172	0
Turn Type	Prot		Perm	Prot		Perm	Split		Perm	Split		
Protected Phases	5	2		1	6		4	4		8	8	
Permitted Phases			2			6			4			
Detector Phases	5	2	2	1	6	6	4	4	4	8	8	
Minimum Initial (s)	4.0	4.0	4.0	4.0	4.0	4.0	4.0	4.0	4.0	4.0	4.0	
Minimum Split (s)	10.0	22.0	22.0	10.0	22.0	22.0	22.0	22.0	22.0	15.0	15.0	
Total Split (s)	26.0	46.0	46.0	26.0	46.0	46.0	46.0	46.0	46.0	26.0	26.0	0.0
Total Split (%)	18.1%	31.9%	31.9%	18.1%	31.9%	31.9%	31.9%	31.9%	31.9%	18.1%	18.1%	0.0%
Maximum Green (s)	20.0	40.0	40.0	20.0	40.0	40.0	40.0	40.0	40.0	20.0	20.0	
Yellow Time (s)	4.0	4.0	4.0	4.0	4.0	4.0	4.0	4.0	4.0	4.0	4.0	
All-Red Time (s)	2.0	2.0	2.0	2.0	2.0	2.0	2.0	2.0	2.0	2.0	2.0	
Lead/Lag	Lead	Lag	Lag	Lead	Lag	Lag						
Lead-Lag Optimize?	Yes	Yes	Yes	Yes	Yes	Yes						
Vehicle Extension (s)	4.0	4.0	4.0	4.0	4.0	4.0	4.0	4.0	4.0	4.0	4.0	
Recall Mode	None	None	None	None	None	None	Min	Min	Min	Min	Min	
Act Effct Green (s)	12.1	31.4	31.4	11.1	27.6	27.6	43.5	43.5	43.5	17.0	17.0	
Actuated g/C Ratio	0.10	0.28	0.28	0.09	0.24	0.24	0.38	0.38	0.38	0.15	0.15	
v/c Ratio	0.30	0.45	0.67	0.23	0.72	0.20	0.92	0.95	0.04	0.17	0.60	
Control Delay	53.4	37.0	5.6	54.8	43.6	7.9	58.0	63.7	12.0	47.2	46.8	
Queue Delay	0.0	0.0	0.0	0.0	0.0	0.0	9.4	17.1	0.0	0.0	0.0	
Total Delay	53.4	37.0	5.6	54.8	43.6	7.9	67.4	80.7	12.0	47.2	46.8	
LOS	D	D	A	D	D	A	E	F	B	D	D	
Approach Delay		16.3			37.5			72.8			46.9	

Lane Group	EBL	EBT	EBR	WBL	WBT	WBR	NBL	NBT	NBR	SBL	SBT	SBR
Approach LOS		B			D			E			D	
Queue Length 50th (ft)	38	146	0	26	225	0	453	~497	1	31	106	
Queue Length 95th (ft)	87	235	82	67	350	41	#846	#902	23	56	144	
Internal Link Dist (ft)		1082			2151			441			289	
Turn Bay Length (ft)	205		360	250		250	300		380	100		
Base Capacity (vph)	308	631	1019	294	622	570	640	649	700	348	360	
Starvation Cap Reductn	0	0	0	0	0	0	44	48	0	0	0	
Spillback Cap Reductn	0	0	0	0	0	0	0	0	0	0	0	
Storage Cap Reductn	0	0	0	0	0	0	0	0	0	0	0	
Reduced v/c Ratio	0.18	0.36	0.62	0.13	0.52	0.16	0.99	1.03	0.04	0.14	0.48	

Intersection Summary

Area Type: Other
Cycle Length: 144
Actuated Cycle Length: 113.2
Natural Cycle: 90
Control Type: Actuated-Uncoordinated
Maximum v/c Ratio: 0.95
Intersection Signal Delay: 46.9 Intersection LOS: D
Intersection Capacity Utilization 64.7% ICU Level of Service C
Analysis Period (min) 15

~ Volume exceeds capacity, queue is theoretically infinite.
Queue shown is maximum after two cycles.

95th percentile volume exceeds capacity, queue may be longer.
Queue shown is maximum after two cycles.

Splits and Phases: 7: Elm Street & NH Route 101

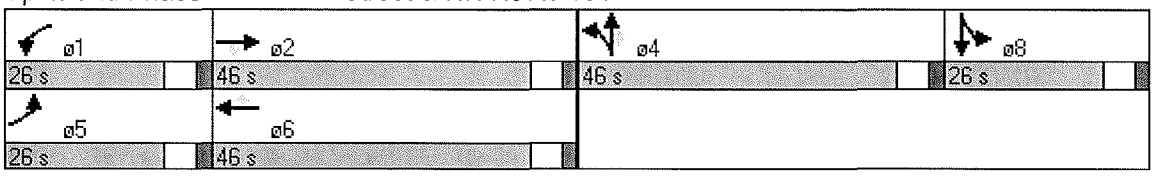

Movement	EBT	EBR	WBL	WBT	NEL	NER
Lane Configurations						
Sign Control	Free			Free	Stop	
Grade	0%			0%	0%	
Volume (veh/h)	290	8	151	415	2	151
Peak Hour Factor	0.93	0.93	0.92	0.92	0.88	0.88
Hourly flow rate (vph)	312	9	164	451	2	172
Pedestrians						
Lane Width (ft)						
Walking Speed (ft/s)						
Percent Blockage						
Right turn flare (veh)						
Median type					None	
Median storage veh)						
Upstream signal (ft)						
pX, platoon unblocked						
vC, conflicting volume			320		1095	316
vC1, stage 1 conf vol						
vC2, stage 2 conf vol						
vCu, unblocked vol			320		1095	316
tC, single (s)			4.1		6.4	6.2
tC, 2 stage (s)						
tF (s)			2.2		3.5	3.3
p0 queue free %			87		99	76
cM capacity (veh/h)			1239		206	727

Direction, Lane #	EB 1	WB 1	WB 2	NE 1
Volume Total	320	164	451	174
Volume Left	0	164	0	2
Volume Right	9	0	0	172
cSH	1700	1239	1700	703
Volume to Capacity	0.19	0.13	0.27	0.25
Queue Length 95th (ft)	0	11	0	24
Control Delay (s)	0.0	8.3	0.0	11.8
Lane LOS		A		B
Approach Delay (s)	0.0	2.2		11.8
Approach LOS				B

Intersection Summary			
Average Delay	3.1		
Intersection Capacity Utilization	43.6%	ICU Level of Service	A
Analysis Period (min)	15		

Lane Group	EBT	EBR	WBL	WBT	NBL	NBR	ø9
Lane Configurations							
Ideal Flow (vphpl)	1900	1900	1900	1900	1900	1900	
Lane Width (ft)	12	12	11	14	11	12	
Storage Length (ft)		100	150		150	0	
Storage Lanes		1	1		1	1	
Total Lost Time (s)	4.0	4.0	4.0	4.0	4.0	4.0	
Leading Detector (ft)	50	50	50	50	50	50	
Trailing Detector (ft)	0	0	0	0	0	0	
Turning Speed (mph)		9	15		15	9	
Lane Util. Factor	1.00	1.00	1.00	1.00	1.00	1.00	
Frt		0.850				0.850	
Flt Protected			0.950		0.950		
Satd. Flow (prot)	1863	1583	1711	1987	1728	1599	
Flt Permitted			0.950		0.950		
Satd. Flow (perm)	1863	1583	1711	1987	1728	1599	
Right Turn on Red		Yes				Yes	
Satd. Flow (RTOR)		42				135	
Headway Factor	1.00	1.00	1.04	0.92	1.04	1.00	
Link Speed (mph)	30			30	25		
Link Distance (ft)	2984			380	539		
Travel Time (s)	67.8			8.6	14.7		
Volume (vph)	485	95	176	541	121	119	
Peak Hour Factor	0.93	0.93	0.91	0.91	0.88	0.88	
Heavy Vehicles (%)	2%	2%	2%	2%	1%	1%	
Adj. Flow (vph)	522	102	193	595	138	135	
Lane Group Flow (vph)	522	102	193	595	138	135	
Turn Type		Perm	Prot			Prot	
Protected Phases	2		1	6	8	8	9
Permitted Phases		2					
Detector Phases	2	2	1	6	8	8	
Minimum Initial (s)	4.0	4.0	4.0	4.0	4.0	4.0	4.0
Minimum Split (s)	22.0	22.0	10.0	22.0	22.0	22.0	21.0
Total Split (s)	36.0	36.0	25.0	61.0	34.0	34.0	21.0
Total Split (%)	31.0%	31.0%	21.6%	52.6%	29.3%	29.3%	18%
Maximum Green (s)	30.0	30.0	20.0	55.0	30.0	30.0	18.0
Yellow Time (s)	4.0	4.0	3.0	4.0	3.0	3.0	3.0
All-Red Time (s)	2.0	2.0	2.0	2.0	1.0	1.0	0.0
Lead/Lag	Lag	Lag	Lead				
Lead-Lag Optimize?	Yes	Yes	Yes				
Vehicle Extension (s)	3.0	3.0	3.0	3.0	3.0	3.0	3.0
Recall Mode	None	None	None	None	Min	Min	None
Walk Time (s)							12.0
Flash Dont Walk (s)							6.0
Pedestrian Calls (#/hr)							0
Act Effct Green (s)	30.9	30.9	13.4	45.0	10.5	10.5	
Actuated g/C Ratio	0.48	0.48	0.20	0.70	0.16	0.16	
v/c Ratio	0.58	0.13	0.56	0.43	0.49	0.36	
Control Delay	18.4	9.2	27.4	5.1	28.5	6.7	
Queue Delay	0.0	0.0	0.0	0.0	0.0	0.0	

Lane Group	EBT	EBR	WBL	WBT	NBL	NBR	ø9
Total Delay	18.4	9.2	27.4	5.1	28.5	6.7	
LOS	B	A	C	A	C	A	
Approach Delay	16.9			10.6	17.7		
Approach LOS	B			B	B		
Queue Length 50th (ft)	154	13	73	75	54	0	
Queue Length 95th (ft)	331	49	143	162	111	42	
Internal Link Dist (ft)	2904			300	459		
Turn Bay Length (ft)		100	150		150		
Base Capacity (vph)	933	814	493	1499	636	674	
Starvation Cap Reductn	0	0	0	0	0	0	
Spillback Cap Reductn	0	0	0	0	0	0	
Storage Cap Reductn	0	0	0	0	0	0	
Reduced v/c Ratio	0.56	0.13	0.39	0.40	0.22	0.20	

Intersection Summary

Area Type: Other
Cycle Length: 116
Actuated Cycle Length: 64.1
Natural Cycle: 90
Control Type: Actuated-Uncoordinated
Maximum v/c Ratio: 0.58
Intersection Signal Delay: 14.1 Intersection LOS: B
Intersection Capacity Utilization 52.0% ICU Level of Service A
Analysis Period (min) 15

Splits and Phases: 26: Elm Street & West Street

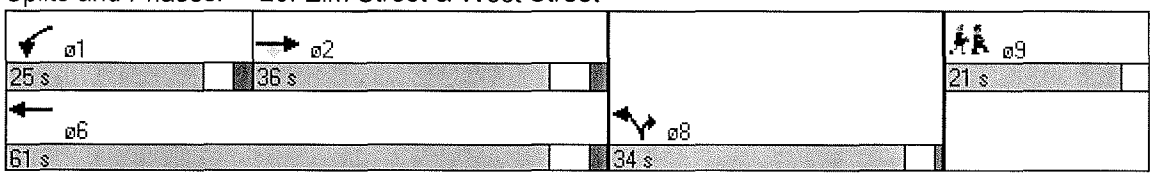

Movement	EBL	EBT	EBR	WBL	WBT	WBR	NBL	NBT	NBR	SBL	SBT	SBR
Lane Configurations												
Sign Control		Stop			Stop			Free			Free	
Grade		0%			0%			0%			0%	
Volume (veh/h)	5	0	6	13	14	43	7	158	7	27	145	9
Peak Hour Factor	0.92	0.92	0.92	0.92	0.92	0.92	0.92	0.92	0.92	0.92	0.92	0.92
Hourly flow rate (vph)	5	0	7	14	15	47	8	172	8	29	158	10
Pedestrians												
Lane Width (ft)												
Walking Speed (ft/s)												
Percent Blockage												
Right turn flare (veh)												
Median type		None			None							
Median storage veh)												
Upstream signal (ft)											539	
pX, platoon unblocked												
vC, conflicting volume	466	416	162	418	417	176	167			179		
vC1, stage 1 conf vol												
vC2, stage 2 conf vol												
vCu, unblocked vol	466	416	162	418	417	176	167			179		
tC, single (s)	7.1	6.5	6.2	7.1	6.5	6.2	4.1			4.1		
tC, 2 stage (s)												
tF (s)	3.5	4.0	3.3	3.5	4.0	3.3	2.2			2.2		
p0 queue free %	99	100	99	97	97	95	99			98		
cM capacity (veh/h)	459	514	882	530	513	868	1410			1396		

Direction, Lane #	EB 1	WB 1	NB 1	SB 1
Volume Total	12	76	187	197
Volume Left	5	14	8	29
Volume Right	7	47	8	10
cSH	622	690	1410	1396
Volume to Capacity	0.02	0.11	0.01	0.02
Queue Length 95th (ft)	1	9	0	2
Control Delay (s)	10.9	10.9	0.4	1.3
Lane LOS	B	B	A	A
Approach Delay (s)	10.9	10.9	0.4	1.3
Approach LOS	B	B		

Intersection Summary			
Average Delay	2.7		
Intersection Capacity Utilization	30.4%	ICU Level of Service	A
Analysis Period (min)	15		

Attachment E-3

Projected (2009) Existing Saturday Morning Capacity Analysis (Intersections Along Primary Truck Route)

Lane Group	EBL	EBT	EBR	WBL	WBT	WBR	NBL	NBT	NBR	SBL	SBT	SBR
Lane Configurations												
Ideal Flow (vphpl)	1900	1900	1900	1900	1900	1900	1900	1900	1900	1900	1900	1900
Lane Width (ft)	12	12	16	11	12	11	12	12	16	13	13	12
Storage Length (ft)	205		360	250		250	300		380	100		0
Storage Lanes	1		1	1		1	1		1	1		0
Total Lost Time (s)	4.0	4.0	4.0	4.0	4.0	4.0	4.0	4.0	4.0	4.0	4.0	4.0
Leading Detector (ft)	50	50	50	50	50	50	50	50	50	50	50	
Trailing Detector (ft)	0	0	0	0	0	0	0	0	0	0	0	
Turning Speed (mph)	15		9	15		9	15		9	15		9
Lane Util. Factor	1.00	1.00	1.00	1.00	1.00	1.00	0.95	0.95	1.00	1.00	1.00	1.00
Frt			0.850			0.850			0.850		0.956	
Flt Protected	0.950			0.950			0.950	0.968		0.950		
Satd. Flow (prot)	1770	1863	1794	1728	1881	1546	1681	1713	1794	1847	1858	0
Flt Permitted	0.950			0.950			0.950	0.968		0.950		
Satd. Flow (perm)	1770	1863	1794	1728	1881	1546	1681	1713	1794	1847	1858	0
Right Turn on Red			Yes			Yes			Yes			Yes
Satd. Flow (RTOR)			739			86			32		28	
Headway Factor	1.00	1.00	0.85	1.04	1.00	1.04	1.00	1.00	0.85	0.96	0.96	1.00
Link Speed (mph)		35			35			55			55	
Link Distance (ft)		1162			2231			521			369	
Travel Time (s)		22.6			43.5			6.5			4.6	
Volume (vph)	43	291	695	37	241	74	540	112	30	53	130	54
Peak Hour Factor	0.94	0.94	0.94	0.86	0.86	0.86	0.93	0.93	0.93	0.95	0.95	0.95
Heavy Vehicles (%)	2%	2%	2%	1%	1%	1%	2%	2%	2%	1%	1%	1%
Adj. Flow (vph)	46	310	739	43	280	86	581	120	32	56	137	57
Lane Group Flow (vph)	46	310	739	43	280	86	341	360	32	56	194	0
Turn Type	Prot		Perm	Prot		Perm	Split		Perm	Split		
Protected Phases	5	2		1	6		4	4		8	8	
Permitted Phases			2			6			4			
Detector Phases	5	2	2	1	6	6	4	4	4	8	8	
Minimum Initial (s)	4.0	4.0	4.0	4.0	4.0	4.0	4.0	4.0	4.0	4.0	4.0	
Minimum Split (s)	10.0	11.0	11.0	10.0	11.0	11.0	11.0	11.0	11.0	11.0	11.0	
Total Split (s)	10.0	19.0	19.0	10.0	19.0	19.0	20.0	20.0	20.0	11.0	11.0	0.0
Total Split (%)	16.7%	31.7%	31.7%	16.7%	31.7%	31.7%	33.3%	33.3%	33.3%	18.3%	18.3%	0.0%
Maximum Green (s)	4.0	13.0	13.0	4.0	13.0	13.0	14.0	14.0	14.0	5.0	5.0	
Yellow Time (s)	4.0	4.0	4.0	4.0	4.0	4.0	4.0	4.0	4.0	4.0	4.0	
All-Red Time (s)	2.0	2.0	2.0	2.0	2.0	2.0	2.0	2.0	2.0	2.0	2.0	
Lead/Lag	Lead	Lag	Lag	Lead	Lag	Lag						
Lead-Lag Optimize?	Yes	Yes	Yes	Yes	Yes	Yes						
Vehicle Extension (s)	4.0	4.0	4.0	4.0	4.0	4.0	4.0	4.0	4.0	4.0	4.0	
Recall Mode	None	None	None	None	None	None	Min	Min	Min	Min	Min	
Act Effct Green (s)	6.0	16.3	16.3	6.0	14.5	14.5	15.4	15.4	15.4	7.1	7.1	
Actuated g/C Ratio	0.10	0.30	0.30	0.10	0.27	0.27	0.28	0.28	0.28	0.13	0.13	
v/c Ratio	0.25	0.56	0.70	0.25	0.56	0.18	0.72	0.75	0.06	0.23	0.73	
Control Delay	28.8	22.1	6.1	29.8	23.4	6.1	29.0	30.1	7.4	26.5	41.1	
Queue Delay	0.0	0.0	0.0	0.0	0.0	0.0	0.0	0.0	0.0	0.0	0.0	
Total Delay	28.8	22.1	6.1	29.8	23.4	6.1	29.0	30.1	7.4	26.5	41.1	
LOS	C	C	A	C	C	A	C	C	A	C	D	
Approach Delay		11.6			20.5			28.6			37.8	

Lane Group	EBL	EBT	EBR	WBL	WBT	WBR	NBL	NBT	NBR	SBL	SBT	SBR
Approach LOS		B			C			C			D	
Queue Length 50th (ft)	16	75	0	15	89	0	118	126	0	19	59	
Queue Length 95th (ft)	43	#184	75	39	148	26	#241	#256	17	48	#158	
Internal Link Dist (ft)		1082			2151			441			289	
Turn Bay Length (ft)	205		360	250		250	300		380	100		
Base Capacity (vph)	181	574	1064	172	516	487	491	501	547	241	267	
Starvation Cap Reductn	0	0	0	0	0	0	0	0	0	0	0	
Spillback Cap Reductn	0	0	0	0	0	0	0	0	0	0	0	
Storage Cap Reductn	0	0	0	0	0	0	0	0	0	0	0	
Reduced v/c Ratio	0.25	0.54	0.69	0.25	0.54	0.18	0.69	0.72	0.06	0.23	0.73	

Intersection Summary

Area Type: Other
Cycle Length: 60
Actuated Cycle Length: 54.7
Natural Cycle: 60
Control Type: Actuated-Uncoordinated
Maximum v/c Ratio: 0.75
Intersection Signal Delay: 20.7 Intersection LOS: C
Intersection Capacity Utilization 66.5% ICU Level of Service C
Analysis Period (min) 15
95th percentile volume exceeds capacity, queue may be longer.
Queue shown is maximum after two cycles.

Splits and Phases: 7: Elm Street & NH Route 101

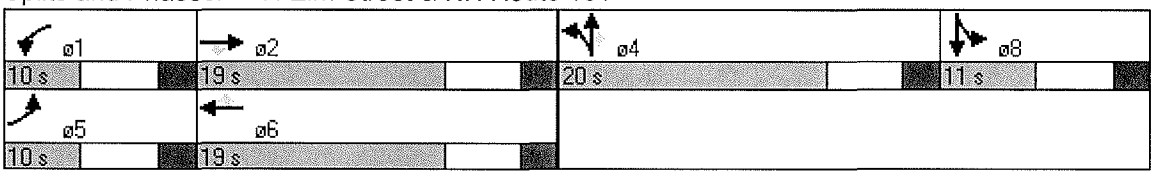

Movement	EBT	EBR	WBL	WBT	NEL	NER
Lane Configurations						
Sign Control	Free			Free	Stop	
Grade	0%			0%	0%	
Volume (veh/h)	370	5	127	326	3	145
Peak Hour Factor	0.90	0.90	0.92	0.92	0.91	0.91
Hourly flow rate (vph)	411	6	138	354	3	159
Pedestrians						
Lane Width (ft)						
Walking Speed (ft/s)						
Percent Blockage						
Right turn flare (veh)						
Median type					None	
Median storage veh)						
Upstream signal (ft)						
pX, platoon unblocked						
vC, conflicting volume			417		1044	414
vC1, stage 1 conf vol						
vC2, stage 2 conf vol						
vCu, unblocked vol			417		1044	414
tC, single (s)			4.1		6.4	6.2
tC, 2 stage (s)						
tF (s)			2.2		3.5	3.3
p0 queue free %			88		99	75
cM capacity (veh/h)			1148		224	641

Direction, Lane #	EB 1	WB 1	WB 2	NE 1
Volume Total	417	138	354	163
Volume Left	0	138	0	3
Volume Right	6	0	0	159
cSH	1700	1148	1700	617
Volume to Capacity	0.25	0.12	0.21	0.26
Queue Length 95th (ft)	0	10	0	26
Control Delay (s)	0.0	8.6	0.0	12.9
Lane LOS		A		B
Approach Delay (s)	0.0	2.4		12.9
Approach LOS				B

Intersection Summary			
Average Delay	3.1		
Intersection Capacity Utilization	46.0%	ICU Level of Service	A
Analysis Period (min)	15		

Lane Group	EBT	EBR	WBL	WBT	NBL	NBR	ø9
Lane Configurations							
Ideal Flow (vphpl)	1900	1900	1900	1900	1900	1900	
Lane Width (ft)	12	12	11	14	11	12	
Storage Length (ft)		100	150		150	0	
Storage Lanes		1	1		1	1	
Total Lost Time (s)	4.0	4.0	4.0	4.0	4.0	4.0	
Leading Detector (ft)	50	50	50	50	50	50	
Trailing Detector (ft)	0	0	0	0	0	0	
Turning Speed (mph)		9	15		15	9	
Lane Util. Factor	1.00	1.00	1.00	1.00	1.00	1.00	
Frt		0.850				0.850	
Flt Protected			0.950		0.950		
Satd. Flow (prot)	1881	1599	1728	2007	1728	1599	
Flt Permitted			0.950		0.950		
Satd. Flow (perm)	1881	1599	1728	2007	1728	1599	
Right Turn on Red		Yes				Yes	
Satd. Flow (RTOR)		68				139	
Headway Factor	1.00	1.00	1.04	0.92	1.04	1.00	
Link Speed (mph)	30			30	25		
Link Distance (ft)	2984			380	539		
Travel Time (s)	67.8			8.6	14.7		
Volume (vph)	539	94	109	531	108	124	
Peak Hour Factor	0.94	0.94	0.96	0.96	0.89	0.89	
Heavy Vehicles (%)	1%	1%	1%	1%	1%	1%	
Adj. Flow (vph)	573	100	114	553	121	139	
Lane Group Flow (vph)	573	100	114	553	121	139	
Turn Type		Perm	Prot			Prot	
Protected Phases	2		1	6	8	8	9
Permitted Phases		2					
Detector Phases	2	2	1	6	8	8	
Minimum Initial (s)	4.0	4.0	4.0	4.0	4.0	4.0	4.0
Minimum Split (s)	11.0	11.0	10.0	11.0	11.0	11.0	21.0
Total Split (s)	28.0	28.0	10.0	38.0	11.0	11.0	21.0
Total Split (%)	40.0%	40.0%	14.3%	54.3%	15.7%	15.7%	30%
Maximum Green (s)	22.0	22.0	5.0	32.0	7.0	7.0	18.0
Yellow Time (s)	4.0	4.0	3.0	4.0	3.0	3.0	3.0
All-Red Time (s)	2.0	2.0	2.0	2.0	1.0	1.0	0.0
Lead/Lag	Lag	Lag	Lead				
Lead-Lag Optimize?	Yes	Yes	Yes				
Vehicle Extension (s)	3.0	3.0	3.0	3.0	3.0	3.0	3.0
Recall Mode	None	None	None	None	Min	Min	None
Walk Time (s)							12.0
Flash Dont Walk (s)							6.0
Pedestrian Calls (#/hr)							0
Act Effct Green (s)	21.0	21.0	6.1	28.3	7.1	7.1	
Actuated g/C Ratio	0.48	0.48	0.13	0.65	0.16	0.16	
v/c Ratio	0.64	0.12	0.50	0.43	0.43	0.37	
Control Delay	12.2	3.7	29.4	4.4	24.2	7.9	
Queue Delay	0.0	0.0	0.0	0.0	0.0	0.0	

Lane Group	EBT	EBR	WBL	WBT	NBL	NBR	ø9
Total Delay	12.2	3.7	29.4	4.4	24.2	7.9	
LOS	B	A	C	A	C	A	
Approach Delay	10.9			8.6	15.5		
Approach LOS	B			A	B		
Queue Length 50th (ft)	109	4	31	48	33	0	
Queue Length 95th (ft)	192	22	#83	83	72	36	
Internal Link Dist (ft)	2904			300	459		
Turn Bay Length (ft)		100	150		150		
Base Capacity (vph)	974	861	229	1399	288	383	
Starvation Cap Reductn	0	0	0	0	0	0	
Spillback Cap Reductn	0	0	0	0	0	0	
Storage Cap Reductn	0	0	0	0	0	0	
Reduced v/c Ratio	0.59	0.12	0.50	0.40	0.42	0.36	

Intersection Summary

Area Type: Other
Cycle Length: 70
Actuated Cycle Length: 43.8
Natural Cycle: 70
Control Type: Actuated-Uncoordinated
Maximum v/c Ratio: 0.64
Intersection Signal Delay: 10.7 Intersection LOS: B
Intersection Capacity Utilization 50.4% ICU Level of Service A
Analysis Period (min) 15
95th percentile volume exceeds capacity, queue may be longer.
Queue shown is maximum after two cycles.

Splits and Phases: 26: Elm Street & West Street

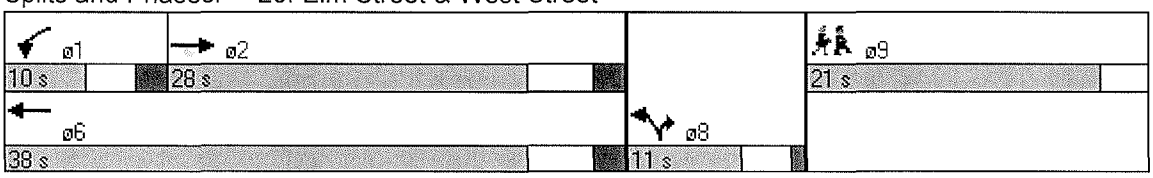

Movement	EBL	EBT	EBR	WBL	WBT	WBR	NBL	NBT	NBR	SBL	SBT	SBR
Lane Configurations												
Sign Control		Stop			Stop			Free			Free	
Grade		0%			0%			0%			0%	
Volume (veh/h)	4	6	4	14	9	27	8	125	13	29	147	9
Peak Hour Factor	0.92	0.92	0.92	0.92	0.92	0.92	0.92	0.92	0.92	0.92	0.92	0.92
Hourly flow rate (vph)	4	7	4	15	10	29	9	136	14	32	160	10
Pedestrians												
Lane Width (ft)												
Walking Speed (ft/s)												
Percent Blockage												
Right turn flare (veh)												
Median type		None			None							
Median storage veh)												
Upstream signal (ft)											539	
pX, platoon unblocked												
vC, conflicting volume	422	395	165	396	393	143	170			150		
vC1, stage 1 conf vol												
vC2, stage 2 conf vol												
vCu, unblocked vol	422	395	165	396	393	143	170			150		
tC, single (s)	7.1	6.5	6.2	7.1	6.5	6.2	4.1			4.1		
tC, 2 stage (s)												
tF (s)	3.5	4.0	3.3	3.5	4.0	3.3	2.2			2.2		
p0 queue free %	99	99	100	97	98	97	99			98		
cM capacity (veh/h)	506	527	880	544	528	905	1408			1431		

Direction, Lane #	EB 1	WB 1	NB 1	SB 1
Volume Total	15	54	159	201
Volume Left	4	15	9	32
Volume Right	4	29	14	10
cSH	587	689	1408	1431
Volume to Capacity	0.03	0.08	0.01	0.02
Queue Length 95th (ft)	2	6	0	2
Control Delay (s)	11.3	10.7	0.5	1.3
Lane LOS	B	B	A	A
Approach Delay (s)	11.3	10.7	0.5	1.3
Approach LOS	B	B		

Intersection Summary			
Average Delay	2.6		
Intersection Capacity Utilization	29.1%	ICU Level of Service	A
Analysis Period (min)	15		

Attachment E-4

Projected (2009) Remedial Action Weekday Morning Capacity Analysis (Intersections Along Primary Truck Route)

Lane Group	EBL	EBT	EBR	WBL	WBT	WBR	NBL	NBT	NBR	SBL	SBT	SBR
Lane Configurations												
Ideal Flow (vphpl)	1900	1900	1900	1900	1900	1900	1900	1900	1900	1900	1900	1900
Lane Width (ft)	12	12	16	11	12	11	12	12	16	13	13	12
Storage Length (ft)	205		360	250		250	300		380	100		0
Storage Lanes	1		1	1		1	1		1	1		0
Total Lost Time (s)	4.0	4.0	4.0	4.0	4.0	4.0	4.0	4.0	4.0	4.0	4.0	4.0
Leading Detector (ft)	50	50	50	50	50	50	50	50	50	50	50	
Trailing Detector (ft)	0	0	0	0	0	0	0	0	0	0	0	
Turning Speed (mph)	15		9	15		9	15		9	15		9
Lane Util. Factor	1.00	1.00	1.00	1.00	1.00	1.00	0.95	0.95	1.00	1.00	1.00	1.00
Frt			0.850			0.850			0.850		0.951	
Flt Protected	0.950			0.950			0.950	0.960		0.950		
Satd. Flow (prot)	1719	1810	1743	1601	1743	1432	1517	1533	1620	1829	1831	0
Flt Permitted	0.950			0.950			0.950	0.960		0.950		
Satd. Flow (perm)	1719	1810	1743	1601	1743	1432	1517	1533	1620	1829	1831	0
Right Turn on Red			Yes			Yes			Yes			Yes
Satd. Flow (RTOR)			885			35			23		14	
Headway Factor	1.00	1.00	0.85	1.04	1.00	1.04	1.00	1.00	0.85	0.96	0.96	1.00
Link Speed (mph)		35			35			55			55	
Link Distance (ft)		1162			2231			521			369	
Travel Time (s)		22.6			43.5			6.5			4.6	
Volume (vph)	45	287	931	30	198	29	467	41	22	95	139	68
Peak Hour Factor	0.93	0.93	0.93	0.84	0.84	0.84	0.95	0.95	0.95	0.93	0.93	0.93
Heavy Vehicles (%)	5%	5%	5%	9%	9%	9%	13%	13%	13%	2%	2%	2%
Adj. Flow (vph)	48	309	1001	36	236	35	492	43	23	102	149	73
Lane Group Flow (vph)	48	309	1001	36	236	35	261	274	23	102	222	0
Turn Type	Prot		Perm	Prot		Perm	Split		Perm	Split		
Protected Phases	5	2		1	6		4	4		8	8	
Permitted Phases			2			6			4			
Detector Phases	5	2	2	1	6	6	4	4	4	8	8	
Minimum Initial (s)	5.0	5.0	5.0	5.0	5.0	5.0	5.0	5.0	5.0	5.0	5.0	
Minimum Split (s)	11.0	11.0	11.0	11.0	11.0	11.0	11.0	11.0	11.0	11.0	11.0	
Total Split (s)	21.0	36.0	36.0	21.0	36.0	36.0	66.0	66.0	66.0	21.0	21.0	0.0
Total Split (%)	14.6%	25.0%	25.0%	14.6%	25.0%	25.0%	45.8%	45.8%	45.8%	14.6%	14.6%	0.0%
Maximum Green (s)	15.0	30.0	30.0	15.0	30.0	30.0	60.0	60.0	60.0	15.0	15.0	
Yellow Time (s)	4.0	4.0	4.0	4.0	4.0	4.0	4.0	4.0	4.0	4.0	4.0	
All-Red Time (s)	2.0	2.0	2.0	2.0	2.0	2.0	2.0	2.0	2.0	2.0	2.0	
Lead/Lag	Lead	Lag	Lag	Lead	Lag	Lag						
Lead-Lag Optimize?	Yes	Yes	Yes	Yes	Yes	Yes						
Vehicle Extension (s)	4.0	4.0	4.0	4.0	4.0	4.0	4.0	4.0	4.0	4.0	4.0	
Recall Mode	None	Min	Min	None	Min	Min	None	None	None	None	None	
Act Effct Green (s)	11.3	27.1	27.1	10.9	26.8	26.8	24.5	24.5	24.5	18.0	18.0	
Actuated g/C Ratio	0.12	0.30	0.30	0.11	0.30	0.30	0.27	0.27	0.27	0.20	0.20	
v/c Ratio	0.24	0.57	0.88	0.20	0.46	0.08	0.64	0.66	0.05	0.28	0.59	
Control Delay	45.1	33.5	13.1	45.5	32.2	10.9	32.5	32.8	10.9	41.9	44.4	
Queue Delay	0.0	0.0	0.0	0.0	0.0	0.0	0.0	0.0	0.0	0.0	0.0	
Total Delay	45.1	33.5	13.1	45.5	32.2	10.9	32.5	32.8	10.9	41.9	44.4	
LOS	D	C	B	D	C	B	C	C	B	D	D	
Approach Delay		18.9			31.4			31.7			43.6	

Lane Group	EBL	EBT	EBR	WBL	WBT	WBR	NBL	NBT	NBR	SBL	SBT	SBR
Approach LOS		B			C			C			D	
Queue Length 50th (ft)	29	167	56	22	124	0	161	169	0	60	130	
Queue Length 95th (ft)	72	306	#424	54	217	23	258	271	19	128	#282	
Internal Link Dist (ft)		1082			2151			441			289	
Turn Bay Length (ft)	205		360	250		250	300		380	100		
Base Capacity (vph)	296	628	1183	275	603	519	750	758	812	370	382	
Starvation Cap Reductn	0	0	0	0	0	0	0	0	0	0	0	
Spillback Cap Reductn	0	0	0	0	0	0	0	0	0	0	0	
Storage Cap Reductn	0	0	0	0	0	0	0	0	0	0	0	
Reduced v/c Ratio	0.16	0.49	0.85	0.13	0.39	0.07	0.35	0.36	0.03	0.28	0.58	

Intersection Summary

Area Type: Other
Cycle Length: 144
Actuated Cycle Length: 90.6
Natural Cycle: 90
Control Type: Actuated-Uncoordinated
Maximum v/c Ratio: 0.88
Intersection Signal Delay: 26.4 Intersection LOS: C
Intersection Capacity Utilization 83.3% ICU Level of Service E
Analysis Period (min) 15
95th percentile volume exceeds capacity, queue may be longer.
Queue shown is maximum after two cycles.

Splits and Phases: 7: Elm Street & NH Route 101

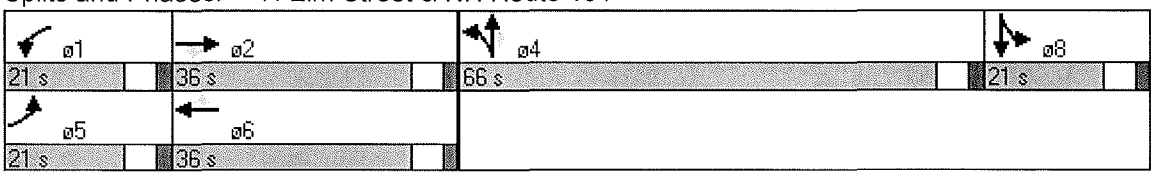

Movement	EBT	EBR	WBL	WBT	NEL	NER
Lane Configurations						
Sign Control	Free			Free	Stop	
Grade	0%			0%	0%	
Volume (veh/h)	364	7	90	224	2	80
Peak Hour Factor	0.78	0.78	0.75	0.75	0.84	0.84
Hourly flow rate (vph)	467	9	120	299	2	95
Pedestrians						
Lane Width (ft)						
Walking Speed (ft/s)						
Percent Blockage						
Right turn flare (veh)						
Median type					None	
Median storage veh)						
Upstream signal (ft)						
pX, platoon unblocked						
vC, conflicting volume			476		1010	471
vC1, stage 1 conf vol						
vC2, stage 2 conf vol						
vCu, unblocked vol			476		1010	471
tC, single (s)			4.2		6.4	6.2
tC, 2 stage (s)						
tF (s)			2.3		3.5	3.3
p0 queue free %			89		99	84
cM capacity (veh/h)			1056		234	589

Direction, Lane #	EB 1	WB 1	WB 2	NE 1
Volume Total	476	120	299	98
Volume Left	0	120	0	2
Volume Right	9	0	0	95
cSH	1700	1056	1700	568
Volume to Capacity	0.28	0.11	0.18	0.17
Queue Length 95th (ft)	0	10	0	15
Control Delay (s)	0.0	8.8	0.0	12.7
Lane LOS		A		B
Approach Delay (s)	0.0	2.5		12.7
Approach LOS				B

Intersection Summary			
Average Delay	2.3		
Intersection Capacity Utilization	39.6%	ICU Level of Service	A
Analysis Period (min)	15		

Lane Group	EBT	EBR	WBL	WBT	NBL	NBR	ø9
Lane Configurations							
Ideal Flow (vphpl)	1900	1900	1900	1900	1900	1900	
Lane Width (ft)	12	12	11	14	11	12	
Storage Length (ft)		100	150		150	0	
Storage Lanes		1	1		1	1	
Total Lost Time (s)	4.0	4.0	4.0	4.0	4.0	4.0	
Leading Detector (ft)	50	50	50	50	50	50	
Trailing Detector (ft)	0	0	0	0	0	0	
Turning Speed (mph)		9	15		15	9	
Lane Util. Factor	1.00	1.00	1.00	1.00	1.00	1.00	
Frt		0.850				0.850	
Flt Protected			0.950		0.950		
Satd. Flow (prot)	1792	1524	1646	1912	1678	1553	
Flt Permitted			0.950		0.950		
Satd. Flow (perm)	1792	1524	1646	1912	1678	1553	
Right Turn on Red		Yes				Yes	
Satd. Flow (RTOR)		56				297	
Headway Factor	1.00	1.00	1.04	0.92	1.04	1.00	
Link Speed (mph)	30			30	25		
Link Distance (ft)	2984			380	539		
Travel Time (s)	67.8			8.6	14.7		
Volume (vph)	430	92	113	382	149	205	
Peak Hour Factor	0.92	0.92	0.93	0.93	0.69	0.69	
Heavy Vehicles (%)	6%	6%	6%	6%	4%	4%	
Adj. Flow (vph)	467	100	122	411	216	297	
Lane Group Flow (vph)	467	100	122	411	216	297	
Turn Type		Perm	Prot			Prot	
Protected Phases	2		1	6	8	8	9
Permitted Phases		2					
Detector Phases	2	2	1	6	8	8	
Minimum Initial (s)	4.0	4.0	4.0	4.0	4.0	4.0	5.0
Minimum Split (s)	22.0	22.0	10.0	22.0	22.0	22.0	21.0
Total Split (s)	40.0	40.0	20.0	60.0	24.0	24.0	21.0
Total Split (%)	38.1%	38.1%	19.0%	57.1%	22.9%	22.9%	20%
Maximum Green (s)	34.0	34.0	15.0	54.0	20.0	20.0	18.0
Yellow Time (s)	4.0	4.0	3.0	4.0	3.0	3.0	3.0
All-Red Time (s)	2.0	2.0	2.0	2.0	1.0	1.0	0.0
Lead/Lag	Lag	Lag	Lead				
Lead-Lag Optimize?	Yes	Yes	Yes				
Vehicle Extension (s)	3.0	3.0	3.0	3.0	3.0	3.0	3.0
Recall Mode	None	None	None	None	Min	Min	None
Walk Time (s)							12.0
Flash Dont Walk (s)							6.0
Pedestrian Calls (#/hr)							0
Act Effct Green (s)	22.7	22.7	10.9	34.0	13.1	13.1	
Actuated g/C Ratio	0.40	0.40	0.19	0.60	0.23	0.23	
v/c Ratio	0.65	0.16	0.40	0.36	0.56	0.51	
Control Delay	17.9	7.7	27.6	6.0	25.7	5.6	
Queue Delay	0.0	0.0	0.0	0.0	0.0	0.0	

Lane Group	EBT	EBR	WBL	WBT	NBL	NBR	ø9
Total Delay	17.9	7.7	27.6	6.0	25.7	5.6	
LOS	B	A	C	A	C	A	
Approach Delay	16.1			10.9	14.0		
Approach LOS	B			B	B		
Queue Length 50th (ft)	127	9	37	53	66	0	
Queue Length 95th (ft)	284	42	108	123	123	15	
Internal Link Dist (ft)	2904			300	459		
Turn Bay Length (ft)		100	150		150		
Base Capacity (vph)	953	837	434	1395	568	722	
Starvation Cap Reductn	0	0	0	0	0	0	
Spillback Cap Reductn	0	0	0	0	0	0	
Storage Cap Reductn	0	0	0	0	0	0	
Reduced v/c Ratio	0.49	0.12	0.28	0.29	0.38	0.41	

Intersection Summary

Area Type: Other
Cycle Length: 105
Actuated Cycle Length: 56.8
Natural Cycle: 80
Control Type: Actuated-Uncoordinated
Maximum v/c Ratio: 0.65
Intersection Signal Delay: 13.8 Intersection LOS: B
Intersection Capacity Utilization 47.1% ICU Level of Service A
Analysis Period (min) 15

Splits and Phases: 26: Elm Street & West Street

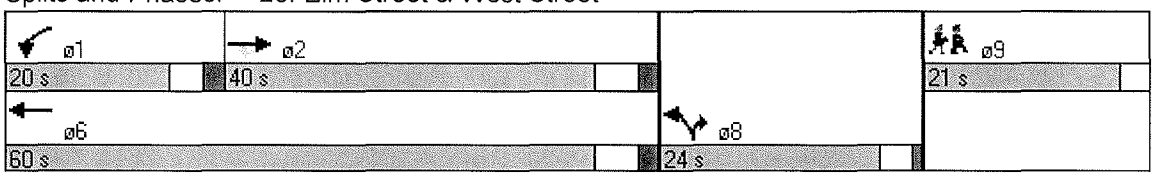

Movement	EBL	EBT	EBR	WBL	WBT	WBR	NBL	NBT	NBR	SBL	SBT	SBR
Lane Configurations												
Sign Control		Stop			Stop			Free			Free	
Grade		0%			0%			0%			0%	
Volume (veh/h)	10	7	24	19	3	15	12	272	49	29	278	6
Peak Hour Factor	0.92	0.92	0.92	0.92	0.92	0.92	0.92	0.92	0.92	0.92	0.92	0.92
Hourly flow rate (vph)	11	8	26	21	3	16	13	296	53	32	302	7
Pedestrians												
Lane Width (ft)												
Walking Speed (ft/s)												
Percent Blockage												
Right turn flare (veh)												
Median type		None			None							
Median storage veh)												
Upstream signal (ft)											539	
pX, platoon unblocked												
vC, conflicting volume	735	743	305	747	720	322	309			349		
vC1, stage 1 conf vol												
vC2, stage 2 conf vol												
vCu, unblocked vol	735	743	305	747	720	322	309			349		
tC, single (s)	7.1	6.5	6.2	7.1	6.5	6.2	4.1			4.1		
tC, 2 stage (s)												
tF (s)	3.5	4.0	3.3	3.5	4.0	3.3	2.2			2.2		
p0 queue free %	97	98	96	93	99	98	99			97		
cM capacity (veh/h)	316	331	734	303	341	719	1252			1210		

Direction, Lane #	EB 1	WB 1	NB 1	SB 1
Volume Total	45	40	362	340
Volume Left	11	21	13	32
Volume Right	26	16	53	7
cSH	480	401	1252	1210
Volume to Capacity	0.09	0.10	0.01	0.03
Queue Length 95th (ft)	8	8	1	2
Control Delay (s)	13.3	15.0	0.4	1.0
Lane LOS	B	B	A	A
Approach Delay (s)	13.3	15.0	0.4	1.0
Approach LOS	B	B		

Intersection Summary			
Average Delay	2.1		
Intersection Capacity Utilization	38.0%	ICU Level of Service	A
Analysis Period (min)	15		

Attachment E-5

Projected (2009) Remedial Action Weekday Afternoon Capacity Analysis (Intersections Along Primary Truck Route)

Lane Group	EBL	EBT	EBR	WBL	WBT	WBR	NBL	NBT	NBR	SBL	SBT	SBR
Lane Configurations												
Ideal Flow (vphpl)	1900	1900	1900	1900	1900	1900	1900	1900	1900	1900	1900	1900
Lane Width (ft)	12	12	16	11	12	11	12	12	16	13	13	12
Storage Length (ft)	205		360	250		250	300		380	100		0
Storage Lanes	1		1	1		1	1		1	1		0
Total Lost Time (s)	4.0	4.0	4.0	4.0	4.0	4.0	4.0	4.0	4.0	4.0	4.0	4.0
Leading Detector (ft)	50	50	50	50	50	50	50	50	50	50	50	
Trailing Detector (ft)	0	0	0	0	0	0	0	0	0	0	0	
Turning Speed (mph)	15		9	15		9	15		9	15		9
Lane Util. Factor	1.00	1.00	1.00	1.00	1.00	1.00	0.95	0.95	1.00	1.00	1.00	1.00
Frt			0.850			0.850			0.850		0.937	
Flt Protected	0.950			0.950			0.950	0.964		0.950		
Satd. Flow (prot)	1736	1827	1760	1711	1863	1531	1665	1689	1777	1829	1804	0
Flt Permitted	0.950			0.950			0.950	0.964		0.950		
Satd. Flow (perm)	1736	1827	1760	1711	1863	1531	1665	1689	1777	1829	1804	0
Right Turn on Red			Yes			Yes			Yes			Yes
Satd. Flow (RTOR)			628			89			31		21	
Headway Factor	1.00	1.00	0.85	1.04	1.00	1.04	1.00	1.00	0.85	0.96	0.96	1.00
Link Speed (mph)		35			35			55			55	
Link Distance (ft)		1162			2231			521			369	
Travel Time (s)		22.6			43.5			6.5			4.6	
Volume (vph)	48	203	559	39	300	82	915	135	30	32	68	49
Peak Hour Factor	0.89	0.89	0.89	0.92	0.92	0.92	0.87	0.87	0.87	0.68	0.68	0.68
Heavy Vehicles (%)	4%	4%	4%	2%	2%	2%	3%	3%	3%	2%	2%	2%
Adj. Flow (vph)	54	228	628	42	326	89	1052	155	34	47	100	72
Lane Group Flow (vph)	54	228	628	42	326	89	588	619	34	47	172	0
Turn Type	Prot		Perm	Prot		Perm	Split		Perm	Split		
Protected Phases	5	2		1	6		4	4		8	8	
Permitted Phases			2			6			4			
Detector Phases	5	2	2	1	6	6	4	4	4	8	8	
Minimum Initial (s)	4.0	4.0	4.0	4.0	4.0	4.0	4.0	4.0	4.0	4.0	4.0	
Minimum Split (s)	10.0	22.0	22.0	10.0	22.0	22.0	22.0	22.0	22.0	15.0	15.0	
Total Split (s)	26.0	46.0	46.0	26.0	46.0	46.0	46.0	46.0	46.0	26.0	26.0	0.0
Total Split (%)	18.1%	31.9%	31.9%	18.1%	31.9%	31.9%	31.9%	31.9%	31.9%	18.1%	18.1%	0.0%
Maximum Green (s)	20.0	40.0	40.0	20.0	40.0	40.0	40.0	40.0	40.0	20.0	20.0	
Yellow Time (s)	4.0	4.0	4.0	4.0	4.0	4.0	4.0	4.0	4.0	4.0	4.0	
All-Red Time (s)	2.0	2.0	2.0	2.0	2.0	2.0	2.0	2.0	2.0	2.0	2.0	
Lead/Lag	Lead	Lag	Lag	Lead	Lag	Lag						
Lead-Lag Optimize?	Yes	Yes	Yes	Yes	Yes	Yes						
Vehicle Extension (s)	4.0	4.0	4.0	4.0	4.0	4.0	4.0	4.0	4.0	4.0	4.0	
Recall Mode	None	None	None	None	None	None	Min	Min	Min	Min	Min	
Act Effct Green (s)	12.1	31.2	31.2	11.4	27.6	27.6	43.5	43.5	43.5	17.0	17.0	
Actuated g/C Ratio	0.10	0.28	0.28	0.10	0.24	0.24	0.38	0.38	0.38	0.15	0.15	
v/c Ratio	0.30	0.45	0.67	0.26	0.72	0.20	0.92	0.95	0.05	0.17	0.60	
Control Delay	53.4	37.3	5.7	54.7	43.6	7.9	58.0	63.7	11.8	47.2	46.8	
Queue Delay	0.0	0.0	0.0	0.0	0.0	0.0	9.4	17.1	0.0	0.0	0.0	
Total Delay	53.4	37.3	5.7	54.7	43.6	7.9	67.4	80.7	11.8	47.2	46.8	
LOS	D	D	A	D	D	A	E	F	B	D	D	
Approach Delay		16.4			37.7			72.5			46.9	

Lane Group	EBL	EBT	EBR	WBL	WBT	WBR	NBL	NBT	NBR	SBL	SBT	SBR
Approach LOS		B			D			E			D	
Queue Length 50th (ft)	38	147	0	30	225	0	453	~497	1	31	106	
Queue Length 95th (ft)	87	236	82	74	350	41	#846	#902	26	56	144	
Internal Link Dist (ft)		1082			2151			441			289	
Turn Bay Length (ft)	205		360	250		250	300		380	100		
Base Capacity (vph)	308	629	1018	295	622	570	640	649	702	348	360	
Starvation Cap Reductn	0	0	0	0	0	0	44	48	0	0	0	
Spillback Cap Reductn	0	0	0	0	0	0	0	0	0	0	0	
Storage Cap Reductn	0	0	0	0	0	0	0	0	0	0	0	
Reduced v/c Ratio	0.18	0.36	0.62	0.14	0.52	0.16	0.99	1.03	0.05	0.14	0.48	

Intersection Summary

Area Type: Other
Cycle Length: 144
Actuated Cycle Length: 113.2
Natural Cycle: 90
Control Type: Actuated-Uncoordinated
Maximum v/c Ratio: 0.95
Intersection Signal Delay: 46.9 Intersection LOS: D
Intersection Capacity Utilization 64.7% ICU Level of Service C
Analysis Period (min) 15

~ Volume exceeds capacity, queue is theoretically infinite.
Queue shown is maximum after two cycles.

95th percentile volume exceeds capacity, queue may be longer.
Queue shown is maximum after two cycles.

Splits and Phases: 7: Elm Street & NH Route 101

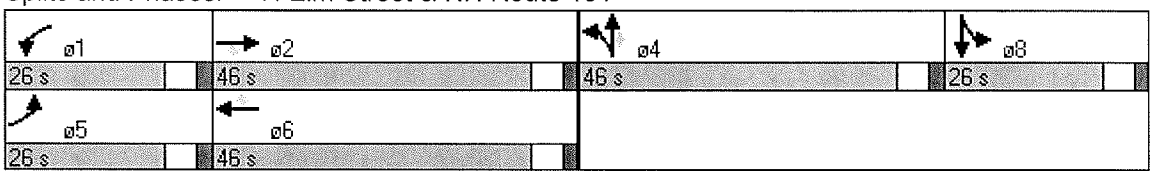

Movement	EBT	EBR	WBL	WBT	NEL	NER
Lane Configurations						
Sign Control	Free			Free	Stop	
Grade	0%			0%	0%	
Volume (veh/h)	295	8	151	420	2	151
Peak Hour Factor	0.93	0.93	0.92	0.92	0.88	0.88
Hourly flow rate (vph)	317	9	164	457	2	172
Pedestrians						
Lane Width (ft)						
Walking Speed (ft/s)						
Percent Blockage						
Right turn flare (veh)						
Median type					None	
Median storage veh)						
Upstream signal (ft)						
pX, platoon unblocked						
vC, conflicting volume			326		1106	322
vC1, stage 1 conf vol						
vC2, stage 2 conf vol						
vCu, unblocked vol			326		1106	322
tC, single (s)			4.1		6.4	6.2
tC, 2 stage (s)						
tF (s)			2.2		3.5	3.3
p0 queue free %			87		99	76
cM capacity (veh/h)			1234		203	722

Direction, Lane #	EB 1	WB 1	WB 2	NE 1
Volume Total	326	164	457	174
Volume Left	0	164	0	2
Volume Right	9	0	0	172
cSH	1700	1234	1700	698
Volume to Capacity	0.19	0.13	0.27	0.25
Queue Length 95th (ft)	0	11	0	24
Control Delay (s)	0.0	8.4	0.0	11.9
Lane LOS		A		B
Approach Delay (s)	0.0	2.2		11.9
Approach LOS				B

Intersection Summary			
Average Delay	3.1		
Intersection Capacity Utilization	43.8%	ICU Level of Service	A
Analysis Period (min)	15		

Lane Group	EBT	EBR	WBL	WBT	NBL	NBR	ø9
Lane Configurations							
Ideal Flow (vphpl)	1900	1900	1900	1900	1900	1900	
Lane Width (ft)	12	12	11	14	11	12	
Storage Length (ft)		100	150		150	0	
Storage Lanes		1	1		1	1	
Total Lost Time (s)	4.0	4.0	4.0	4.0	4.0	4.0	
Leading Detector (ft)	50	50	50	50	50	50	
Trailing Detector (ft)	0	0	0	0	0	0	
Turning Speed (mph)		9	15		15	9	
Lane Util. Factor	1.00	1.00	1.00	1.00	1.00	1.00	
Frt		0.850				0.850	
Flt Protected			0.950		0.950		
Satd. Flow (prot)	1863	1583	1711	1987	1728	1599	
Flt Permitted			0.950		0.950		
Satd. Flow (perm)	1863	1583	1711	1987	1728	1599	
Right Turn on Red		Yes				Yes	
Satd. Flow (RTOR)		42				135	
Headway Factor	1.00	1.00	1.04	0.92	1.04	1.00	
Link Speed (mph)	30			30	25		
Link Distance (ft)	2984			380	539		
Travel Time (s)	67.8			8.6	14.7		
Volume (vph)	488	97	176	544	123	119	
Peak Hour Factor	0.93	0.93	0.91	0.91	0.88	0.88	
Heavy Vehicles (%)	2%	2%	2%	2%	1%	1%	
Adj. Flow (vph)	525	104	193	598	140	135	
Lane Group Flow (vph)	525	104	193	598	140	135	
Turn Type		Perm	Prot			Prot	
Protected Phases	2		1	6	8	8	9
Permitted Phases		2					
Detector Phases	2	2	1	6	8	8	
Minimum Initial (s)	4.0	4.0	4.0	4.0	4.0	4.0	4.0
Minimum Split (s)	22.0	22.0	10.0	22.0	22.0	22.0	21.0
Total Split (s)	36.0	36.0	25.0	61.0	34.0	34.0	21.0
Total Split (%)	31.0%	31.0%	21.6%	52.6%	29.3%	29.3%	18%
Maximum Green (s)	30.0	30.0	20.0	55.0	30.0	30.0	18.0
Yellow Time (s)	4.0	4.0	3.0	4.0	3.0	3.0	3.0
All-Red Time (s)	2.0	2.0	2.0	2.0	1.0	1.0	0.0
Lead/Lag	Lag	Lag	Lead				
Lead-Lag Optimize?	Yes	Yes	Yes				
Vehicle Extension (s)	3.0	3.0	3.0	3.0	3.0	3.0	3.0
Recall Mode	None	None	None	None	Min	Min	None
Walk Time (s)							12.0
Flash Dont Walk (s)							6.0
Pedestrian Calls (#/hr)							0
Act Effct Green (s)	31.4	31.4	13.5	45.5	10.6	10.6	
Actuated g/C Ratio	0.49	0.49	0.20	0.70	0.16	0.16	
v/c Ratio	0.58	0.13	0.56	0.43	0.50	0.36	
Control Delay	18.4	9.3	27.6	5.2	28.6	6.7	
Queue Delay	0.0	0.0	0.0	0.0	0.0	0.0	

Lane Group	EBT	EBR	WBL	WBT	NBL	NBR	ø9
Total Delay	18.4	9.3	27.6	5.2	28.6	6.7	
LOS	B	A	C	A	C	A	
Approach Delay	16.9			10.6	17.9		
Approach LOS	B			B	B		
Queue Length 50th (ft)	156	14	74	76	55	0	
Queue Length 95th (ft)	335	50	144	164	112	42	
Internal Link Dist (ft)	2904			300	459		
Turn Bay Length (ft)		100	150		150		
Base Capacity (vph)	932	813	489	1497	631	670	
Starvation Cap Reductn	0	0	0	0	0	0	
Spillback Cap Reductn	0	0	0	0	0	0	
Storage Cap Reductn	0	0	0	0	0	0	
Reduced v/c Ratio	0.56	0.13	0.39	0.40	0.22	0.20	

Intersection Summary

Area Type: Other
Cycle Length: 116
Actuated Cycle Length: 64.6
Natural Cycle: 90
Control Type: Actuated-Uncoordinated
Maximum v/c Ratio: 0.58
Intersection Signal Delay: 14.1 Intersection LOS: B
Intersection Capacity Utilization 52.2% ICU Level of Service A
Analysis Period (min) 15

Splits and Phases: 26: Elm Street & West Street

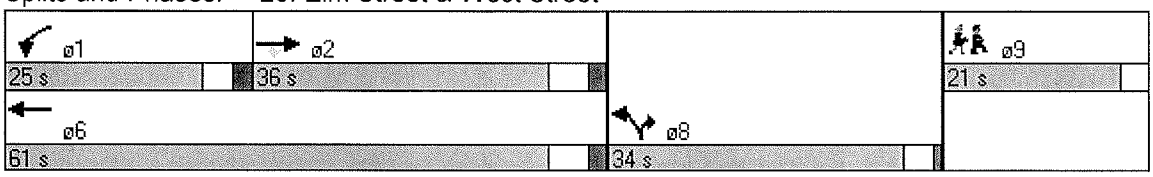

Movement	EBL	EBT	EBR	WBL	WBT	WBR	NBL	NBT	NBR	SBL	SBT	SBR
Lane Configurations												
Sign Control		Stop			Stop			Free			Free	
Grade		0%			0%			0%			0%	
Volume (veh/h)	5	0	6	13	14	45	7	158	7	29	145	9
Peak Hour Factor	0.92	0.92	0.92	0.92	0.92	0.92	0.92	0.92	0.92	0.92	0.92	0.92
Hourly flow rate (vph)	5	0	7	14	15	49	8	172	8	32	158	10
Pedestrians												
Lane Width (ft)												
Walking Speed (ft/s)												
Percent Blockage												
Right turn flare (veh)												
Median type		None			None							
Median storage veh)												
Upstream signal (ft)											539	
pX, platoon unblocked												
vC, conflicting volume	473	420	162	423	421	176	167			179		
vC1, stage 1 conf vol												
vC2, stage 2 conf vol												
vCu, unblocked vol	473	420	162	423	421	176	167			179		
tC, single (s)	7.1	6.5	6.2	7.1	6.5	6.2	4.1			4.1		
tC, 2 stage (s)												
tF (s)	3.5	4.0	3.3	3.5	4.0	3.3	2.2			2.2		
p0 queue free %	99	100	99	97	97	94	99			98		
cM capacity (veh/h)	453	510	882	526	509	868	1410			1396		

Direction, Lane #	EB 1	WB 1	NB 1	SB 1
Volume Total	12	78	187	199
Volume Left	5	14	8	32
Volume Right	7	49	8	10
cSH	616	692	1410	1396
Volume to Capacity	0.02	0.11	0.01	0.02
Queue Length 95th (ft)	1	10	0	2
Control Delay (s)	11.0	10.9	0.4	1.4
Lane LOS	B	B	A	A
Approach Delay (s)	11.0	10.9	0.4	1.4
Approach LOS	B	B		

Intersection Summary			
Average Delay	2.8		
Intersection Capacity Utilization	31.4%	ICU Level of Service	A
Analysis Period (min)	15		

Attachment E-6

Projected (2009) Remedial Action Saturday Morning Capacity Analysis (Intersections Along Primary Truck Route)

Lane Group	EBL	EBT	EBR	WBL	WBT	WBR	NBL	NBT	NBR	SBL	SBT	SBR
Lane Configurations												
Ideal Flow (vphpl)	1900	1900	1900	1900	1900	1900	1900	1900	1900	1900	1900	1900
Lane Width (ft)	12	12	16	11	12	11	12	12	16	13	13	12
Storage Length (ft)	205		360	250		250	300		380	100		0
Storage Lanes	1		1	1		1	1		1	1		0
Total Lost Time (s)	4.0	4.0	4.0	4.0	4.0	4.0	4.0	4.0	4.0	4.0	4.0	4.0
Leading Detector (ft)	50	50	50	50	50	50	50	50	50	50	50	
Trailing Detector (ft)	0	0	0	0	0	0	0	0	0	0	0	
Turning Speed (mph)	15		9	15		9	15		9	15		9
Lane Util. Factor	1.00	1.00	1.00	1.00	1.00	1.00	0.95	0.95	1.00	1.00	1.00	1.00
Frt			0.850			0.850			0.850		0.956	
Flt Protected	0.950			0.950			0.950	0.968		0.950		
Satd. Flow (prot)	1770	1863	1794	1728	1881	1546	1681	1713	1794	1847	1858	0
Flt Permitted	0.950			0.950			0.950	0.968		0.950		
Satd. Flow (perm)	1770	1863	1794	1728	1881	1546	1681	1713	1794	1847	1858	0
Right Turn on Red			Yes			Yes			Yes			Yes
Satd. Flow (RTOR)			739			86			38		28	
Headway Factor	1.00	1.00	0.85	1.04	1.00	1.04	1.00	1.00	0.85	0.96	0.96	1.00
Link Speed (mph)		35			35			55			55	
Link Distance (ft)		1162			2231			521			369	
Travel Time (s)		22.6			43.5			6.5			4.6	
Volume (vph)	43	291	695	42	241	74	540	112	35	53	130	54
Peak Hour Factor	0.94	0.94	0.94	0.86	0.86	0.86	0.93	0.93	0.93	0.95	0.95	0.95
Heavy Vehicles (%)	2%	2%	2%	1%	1%	1%	2%	2%	2%	1%	1%	1%
Adj. Flow (vph)	46	310	739	49	280	86	581	120	38	56	137	57
Lane Group Flow (vph)	46	310	739	49	280	86	341	360	38	56	194	0
Turn Type	Prot		Perm	Prot		Perm	Split		Perm	Split		
Protected Phases	5	2		1	6		4	4		8	8	
Permitted Phases			2			6			4			
Detector Phases	5	2	2	1	6	6	4	4	4	8	8	
Minimum Initial (s)	4.0	4.0	4.0	4.0	4.0	4.0	4.0	4.0	4.0	4.0	4.0	
Minimum Split (s)	10.0	11.0	11.0	10.0	11.0	11.0	11.0	11.0	11.0	11.0	11.0	
Total Split (s)	10.0	19.0	19.0	10.0	19.0	19.0	20.0	20.0	20.0	11.0	11.0	0.0
Total Split (%)	16.7%	31.7%	31.7%	16.7%	31.7%	31.7%	33.3%	33.3%	33.3%	18.3%	18.3%	0.0%
Maximum Green (s)	4.0	13.0	13.0	4.0	13.0	13.0	14.0	14.0	14.0	5.0	5.0	
Yellow Time (s)	4.0	4.0	4.0	4.0	4.0	4.0	4.0	4.0	4.0	4.0	4.0	
All-Red Time (s)	2.0	2.0	2.0	2.0	2.0	2.0	2.0	2.0	2.0	2.0	2.0	
Lead/Lag	Lead	Lag	Lag	Lead	Lag	Lag						
Lead-Lag Optimize?	Yes	Yes	Yes	Yes	Yes	Yes						
Vehicle Extension (s)	4.0	4.0	4.0	4.0	4.0	4.0	4.0	4.0	4.0	4.0	4.0	
Recall Mode	None	None	None	None	None	None	Min	Min	Min	Min	Min	
Act Effct Green (s)	6.0	14.5	14.5	6.0	14.5	14.5	15.4	15.4	15.4	7.1	7.1	
Actuated g/C Ratio	0.10	0.27	0.27	0.10	0.27	0.27	0.28	0.28	0.28	0.13	0.13	
v/c Ratio	0.25	0.63	0.73	0.28	0.56	0.18	0.72	0.75	0.07	0.23	0.73	
Control Delay	28.8	25.4	6.6	29.4	23.4	6.1	29.0	30.1	7.0	26.5	41.1	
Queue Delay	0.0	0.0	0.0	0.0	0.0	0.0	0.0	0.0	0.0	0.0	0.0	
Total Delay	28.8	25.4	6.6	29.4	23.4	6.1	29.0	30.1	7.0	26.5	41.1	
LOS	C	C	A	C	C	A	C	C	A	C	D	
Approach Delay		12.9			20.6			28.4			37.8	

Lane Group	EBL	EBT	EBR	WBL	WBT	WBR	NBL	NBT	NBR	SBL	SBT	SBR
Approach LOS		B			C			C			D	
Queue Length 50th (ft)	16	101	0	17	89	0	118	126	0	19	59	
Queue Length 95th (ft)	43	#184	75	43	148	26	#241	#256	18	48	#158	
Internal Link Dist (ft)		1082			2151			441			289	
Turn Bay Length (ft)	205		360	250		250	300		380	100		
Base Capacity (vph)	181	512	1029	177	516	487	491	501	551	241	267	
Starvation Cap Reductn	0	0	0	0	0	0	0	0	0	0	0	
Spillback Cap Reductn	0	0	0	0	0	0	0	0	0	0	0	
Storage Cap Reductn	0	0	0	0	0	0	0	0	0	0	0	
Reduced v/c Ratio	0.25	0.61	0.72	0.28	0.54	0.18	0.69	0.72	0.07	0.23	0.73	

Intersection Summary

Area Type: Other
Cycle Length: 60
Actuated Cycle Length: 54.7
Natural Cycle: 60
Control Type: Actuated-Uncoordinated
Maximum v/c Ratio: 0.75
Intersection Signal Delay: 21.2 Intersection LOS: C
Intersection Capacity Utilization 66.5% ICU Level of Service C
Analysis Period (min) 15
95th percentile volume exceeds capacity, queue may be longer.
Queue shown is maximum after two cycles.

Splits and Phases: 7: Elm Street & NH Route 101

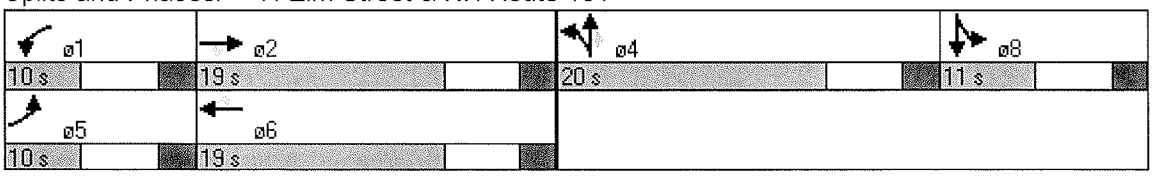

Movement	EBT	EBR	WBL	WBT	NEL	NER
Lane Configurations						
Sign Control	Free			Free	Stop	
Grade	0%			0%	0%	
Volume (veh/h)	375	5	127	331	3	145
Peak Hour Factor	0.90	0.90	0.92	0.92	0.91	0.91
Hourly flow rate (vph)	417	6	138	360	3	159
Pedestrians						
Lane Width (ft)						
Walking Speed (ft/s)						
Percent Blockage						
Right turn flare (veh)						
Median type					None	
Median storage veh)						
Upstream signal (ft)						
pX, platoon unblocked						
vC, conflicting volume			422		1055	419
vC1, stage 1 conf vol						
vC2, stage 2 conf vol						
vCu, unblocked vol			422		1055	419
tC, single (s)			4.1		6.4	6.2
tC, 2 stage (s)						
tF (s)			2.2		3.5	3.3
p0 queue free %			88		99	75
cM capacity (veh/h)			1142		221	636

Direction, Lane #	EB 1	WB 1	WB 2	NE 1
Volume Total	422	138	360	163
Volume Left	0	138	0	3
Volume Right	6	0	0	159
cSH	1700	1142	1700	613
Volume to Capacity	0.25	0.12	0.21	0.27
Queue Length 95th (ft)	0	10	0	27
Control Delay (s)	0.0	8.6	0.0	13.0
Lane LOS		A		B
Approach Delay (s)	0.0	2.4		13.0
Approach LOS				B

Intersection Summary			
Average Delay	3.0		
Intersection Capacity Utilization	46.2%	ICU Level of Service	A
Analysis Period (min)	15		

Lane Group	EBT	EBR	WBL	WBT	NBL	NBR	ø9
Lane Configurations							
Ideal Flow (vphpl)	1900	1900	1900	1900	1900	1900	
Lane Width (ft)	12	12	11	14	11	12	
Storage Length (ft)		100	150		150	0	
Storage Lanes		1	1		1	1	
Total Lost Time (s)	4.0	4.0	4.0	4.0	4.0	4.0	
Leading Detector (ft)	50	50	50	50	50	50	
Trailing Detector (ft)	0	0	0	0	0	0	
Turning Speed (mph)		9	15		15	9	
Lane Util. Factor	1.00	1.00	1.00	1.00	1.00	1.00	
Frt		0.850				0.850	
Flt Protected			0.950		0.950		
Satd. Flow (prot)	1881	1599	1728	2007	1728	1599	
Flt Permitted			0.950		0.950		
Satd. Flow (perm)	1881	1599	1728	2007	1728	1599	
Right Turn on Red		Yes				Yes	
Satd. Flow (RTOR)		69				139	
Headway Factor	1.00	1.00	1.04	0.92	1.04	1.00	
Link Speed (mph)	30			30	25		
Link Distance (ft)	2984			380	539		
Travel Time (s)	67.8			8.6	14.7		
Volume (vph)	542	96	109	534	110	124	
Peak Hour Factor	0.94	0.94	0.96	0.96	0.89	0.89	
Heavy Vehicles (%)	1%	1%	1%	1%	1%	1%	
Adj. Flow (vph)	577	102	114	556	124	139	
Lane Group Flow (vph)	577	102	114	556	124	139	
Turn Type		Perm	Prot			Prot	
Protected Phases	2		1	6	8	8	9
Permitted Phases		2					
Detector Phases	2	2	1	6	8	8	
Minimum Initial (s)	4.0	4.0	4.0	4.0	4.0	4.0	4.0
Minimum Split (s)	11.0	11.0	10.0	11.0	11.0	11.0	21.0
Total Split (s)	28.0	28.0	10.0	38.0	11.0	11.0	21.0
Total Split (%)	40.0%	40.0%	14.3%	54.3%	15.7%	15.7%	30%
Maximum Green (s)	22.0	22.0	5.0	32.0	7.0	7.0	18.0
Yellow Time (s)	4.0	4.0	3.0	4.0	3.0	3.0	3.0
All-Red Time (s)	2.0	2.0	2.0	2.0	1.0	1.0	0.0
Lead/Lag	Lag	Lag	Lead				
Lead-Lag Optimize?	Yes	Yes	Yes				
Vehicle Extension (s)	3.0	3.0	3.0	3.0	3.0	3.0	3.0
Recall Mode	None	None	None	None	Min	Min	None
Walk Time (s)							12.0
Flash Dont Walk (s)							6.0
Pedestrian Calls (#/hr)							0
Act Effct Green (s)	21.1	21.1	6.1	28.4	7.1	7.1	
Actuated g/C Ratio	0.48	0.48	0.13	0.65	0.16	0.16	
v/c Ratio	0.64	0.13	0.50	0.43	0.44	0.37	
Control Delay	12.2	3.7	29.5	4.4	24.5	7.9	
Queue Delay	0.0	0.0	0.0	0.0	0.0	0.0	

Lane Group	EBT	EBR	WBL	WBT	NBL	NBR	ø9
Total Delay	12.2	3.7	29.5	4.4	24.5	7.9	
LOS	B	A	C	A	C	A	
Approach Delay	11.0			8.6	15.7		
Approach LOS	B			A	B		
Queue Length 50th (ft)	110	4	31	48	33	0	
Queue Length 95th (ft)	194	22	#83	84	#74	36	
Internal Link Dist (ft)	2904			300	459		
Turn Bay Length (ft)		100	150		150		
Base Capacity (vph)	974	861	229	1398	287	382	
Starvation Cap Reductn	0	0	0	0	0	0	
Spillback Cap Reductn	0	0	0	0	0	0	
Storage Cap Reductn	0	0	0	0	0	0	
Reduced v/c Ratio	0.59	0.12	0.50	0.40	0.43	0.36	

Intersection Summary

Area Type: Other
Cycle Length: 70
Actuated Cycle Length: 43.9
Natural Cycle: 75
Control Type: Actuated-Uncoordinated
Maximum v/c Ratio: 0.64
Intersection Signal Delay: 10.8 Intersection LOS: B
Intersection Capacity Utilization 50.7% ICU Level of Service A
Analysis Period (min) 15
95th percentile volume exceeds capacity, queue may be longer.
Queue shown is maximum after two cycles.

Splits and Phases: 26: Elm Street & West Street

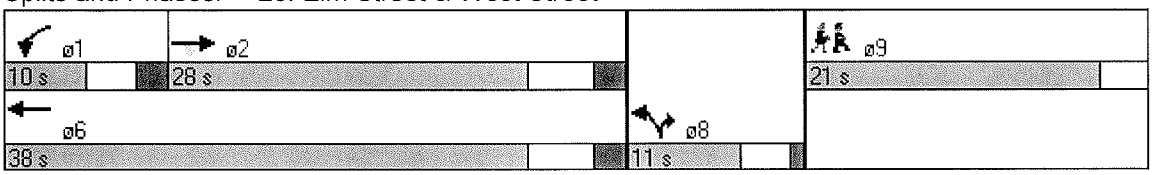

Movement	EBL	EBT	EBR	WBL	WBT	WBR	NBL	NBT	NBR	SBL	SBT	SBR
Lane Configurations												
Sign Control		Stop			Stop			Free			Free	
Grade		0%			0%			0%			0%	
Volume (veh/h)	4	6	4	14	9	29	8	125	13	31	147	9
Peak Hour Factor	0.92	0.92	0.92	0.92	0.92	0.92	0.92	0.92	0.92	0.92	0.92	0.92
Hourly flow rate (vph)	4	7	4	15	10	32	9	136	14	34	160	10
Pedestrians												
Lane Width (ft)												
Walking Speed (ft/s)												
Percent Blockage												
Right turn flare (veh)												
Median type		None			None							
Median storage veh)												
Upstream signal (ft)											539	
pX, platoon unblocked												
vC, conflicting volume	429	399	165	400	397	143	170			150		
vC1, stage 1 conf vol												
vC2, stage 2 conf vol												
vCu, unblocked vol	429	399	165	400	397	143	170			150		
tC, single (s)	7.1	6.5	6.2	7.1	6.5	6.2	4.1			4.1		
tC, 2 stage (s)												
tF (s)	3.5	4.0	3.3	3.5	4.0	3.3	2.2			2.2		
p0 queue free %	99	99	100	97	98	97	99			98		
cM capacity (veh/h)	499	523	880	540	524	905	1408			1431		

Direction, Lane #	EB 1	WB 1	NB 1	SB 1
Volume Total	15	57	159	203
Volume Left	4	15	9	34
Volume Right	4	32	14	10
cSH	582	692	1408	1431
Volume to Capacity	0.03	0.08	0.01	0.02
Queue Length 95th (ft)	2	7	0	2
Control Delay (s)	11.3	10.7	0.5	1.4
Lane LOS	B	B	A	A
Approach Delay (s)	11.3	10.7	0.5	1.4
Approach LOS	B	B		

Intersection Summary			
Average Delay	2.6		
Intersection Capacity Utilization	30.0%	ICU Level of Service	A
Analysis Period (min)	15		

Attachment E-7

Projected (2009) Remedial Action Weekday Morning Capacity Analysis (Intersection to Staging Area 1)

Movement	EBT	EBR	WBL	WBT	NEL	NER
Lane Configurations						
Sign Control	Free			Free	Stop	
Grade	0%			0%	0%	
Volume (veh/h)	359	7	95	219	2	85
Peak Hour Factor	0.78	0.78	0.75	0.75	0.84	0.84
Hourly flow rate (vph)	460	9	127	292	2	101
Pedestrians						
Lane Width (ft)						
Walking Speed (ft/s)						
Percent Blockage						
Right turn flare (veh)						
Median type					None	
Median storage veh)						
Upstream signal (ft)						
pX, platoon unblocked						
vC, conflicting volume			469		1010	465
vC1, stage 1 conf vol						
vC2, stage 2 conf vol						
vCu, unblocked vol			469		1010	465
tC, single (s)			4.2		6.4	6.2
tC, 2 stage (s)						
tF (s)			2.3		3.5	3.3
p0 queue free %			88		99	83
cM capacity (veh/h)			1062		232	593

Direction, Lane #	EB 1	WB 1	WB 2	NE 1
Volume Total	469	127	292	104
Volume Left	0	127	0	2
Volume Right	9	0	0	101
cSH	1700	1062	1700	573
Volume to Capacity	0.28	0.12	0.17	0.18
Queue Length 95th (ft)	0	10	0	16
Control Delay (s)	0.0	8.8	0.0	12.7
Lane LOS		A		B
Approach Delay (s)	0.0	2.7		12.7
Approach LOS				B

Intersection Summary			
Average Delay	2.5		
Intersection Capacity Utilization	40.0%	ICU Level of Service	A
Analysis Period (min)	15		

Attachment E-8

Projected (2009) Remedial Action Weekday Afternoon Capacity Analysis (Intersection to Staging Area 1)

Movement	EBT	EBR	WBL	WBT	NEL	NER
Lane Configurations						
Sign Control	Free			Free	Stop	
Grade	0%			0%	0%	
Volume (veh/h)	290	8	156	415	2	156
Peak Hour Factor	0.93	0.93	0.92	0.92	0.88	0.88
Hourly flow rate (vph)	312	9	170	451	2	177
Pedestrians						
Lane Width (ft)						
Walking Speed (ft/s)						
Percent Blockage						
Right turn flare (veh)						
Median type					None	
Median storage veh)						
Upstream signal (ft)						
pX, platoon unblocked						
vC, conflicting volume			320		1106	316
vC1, stage 1 conf vol						
vC2, stage 2 conf vol						
vCu, unblocked vol			320		1106	316
tC, single (s)			4.1		6.4	6.2
tC, 2 stage (s)						
tF (s)			2.2		3.5	3.3
p0 queue free %			86		99	76
cM capacity (veh/h)			1239		202	727

Direction, Lane #	EB 1	WB 1	WB 2	NE 1
Volume Total	320	170	451	180
Volume Left	0	170	0	2
Volume Right	9	0	0	177
cSH	1700	1239	1700	704
Volume to Capacity	0.19	0.14	0.27	0.26
Queue Length 95th (ft)	0	12	0	25
Control Delay (s)	0.0	8.4	0.0	11.9
Lane LOS		A		B
Approach Delay (s)	0.0	2.3		11.9
Approach LOS				B

Intersection Summary			
Average Delay	3.2		
Intersection Capacity Utilization	44.2%	ICU Level of Service	A
Analysis Period (min)	15		

Attachment E-9

Projected (2009) Remedial Action Saturday Morning Capacity Analysis (Intersection to Staging Area 1)

Movement	EBT	EBR	WBL	WBT	NEL	NER
Lane Configurations						
Sign Control	Free			Free	Stop	
Grade	0%			0%	0%	
Volume (veh/h)	370	5	132	326	3	150
Peak Hour Factor	0.90	0.90	0.92	0.92	0.91	0.91
Hourly flow rate (vph)	411	6	143	354	3	165
Pedestrians						
Lane Width (ft)						
Walking Speed (ft/s)						
Percent Blockage						
Right turn flare (veh)						
Median type					None	
Median storage veh)						
Upstream signal (ft)						
pX, platoon unblocked						
vC, conflicting volume			417		1055	414
vC1, stage 1 conf vol						
vC2, stage 2 conf vol						
vCu, unblocked vol			417		1055	414
tC, single (s)			4.1		6.4	6.2
tC, 2 stage (s)						
tF (s)			2.2		3.5	3.3
p0 queue free %			87		98	74
cM capacity (veh/h)			1148		220	641

Direction, Lane #	EB 1	WB 1	WB 2	NE 1
Volume Total	417	143	354	168
Volume Left	0	143	0	3
Volume Right	6	0	0	165
cSH	1700	1148	1700	617
Volume to Capacity	0.25	0.13	0.21	0.27
Queue Length 95th (ft)	0	11	0	28
Control Delay (s)	0.0	8.6	0.0	13.0
Lane LOS		A		B
Approach Delay (s)	0.0	2.5		13.0
Approach LOS				B

Intersection Summary			
Average Delay	3.2		
Intersection Capacity Utilization	46.5%	ICU Level of Service	A
Analysis Period (min)	15		

Appendix F

Design Calculations

Elm Street Cover Stability Analysis

ARCADIS BBL
Infrastructure, environment, facilities

Calculation Sheet

Client: General Electric Company **Project:** 20985.002

Prepared by: Thomas Steiner, P.E. **Date:** 5/29/2007

Title: Fletcher's Paint Works and Storage Facility

Reviewed By: WAR **Date:** 5/29/07

Subject: Elm Street Area Cover Stability Design

Objective:

Determine the stability of the cover system at the Elm Street Site during a saturated condition (i.e., worst case scenario).

Reference:

1. Analysis and Design of Veneer Cover soils, R.M. Koerner and Te-Yang Soong. 1998. Sixth International Conference on Geosynthetics.

Assumptions:

1. Cover is approximately 0.8 acre in size (see Figure 1) and consists of 18 inches low permeability soil (1x10-5 cm/sec), 18 inches high permeability soil (1x10-2 cm/sec), and 4 inches of topsoil (see Figure 2).
2. Analyses of stormwater control features (i.e., ditches and riprap slopes) are provided separately.

Calculations:

See attached calculation sheet.

ARCADIS BBL
Infrastructure, environment, facilities

Calculation Sheet

Summary:

Given the limited size of the cover system, the relatively shallow slopes, and short drainage lengths, as well as the minimal amount of run-on to the Site expected due to the perimeter collection and conveyance systems, it was determined that in lieu of evaluating the cover stability for a 24-hour, 25-year storm event, that evaluating the worst case condition would be most appropriate. As soils lose stability with the addition of water, the worst case condition during any storm event is a fully saturated cover slope. Under this saturated condition, the Factor of Safety is calculated to be over 4.0 and is acceptable. Any other conditions would provide more favorable safety factors.

Project No.: 20985.002
Project: FLETCHER'S PAINT - ELM STREET AREA
Subject: SLOPE STABILITY ANALYSIS - CAPPED AREA

By: PDB/TAS Date: 5/31/07

Ckd By: _____ Date: _____

Peak Strength
Horizontal Seepage Buildup in Static Veneer Cover Stability
Uniform Cover Soil Thickness

Thickness of cover soil, h	1.83	ft		
Vertical height of slope measured from the toe, H	7.5	ft		
Vertical height of free water surface, Hw	*7.5*	*ft*		
Soil slope angle beneath slip plane, beta	3.3	degrees	0.06	radians
Length of slope measured along the slip plane, L	128.2	ft		
Unit weight of the cover soil, gamma	*125*	*pcf*		
Saturated Unit weight of the cover soil, gamma (sat'd)	*135*	*pcf*		
Unit weight of water, gamma (w)	62.4	pcf		
Friction angle of the cover soil, phi	*30*	*degrees*	*0.52*	*radians*
Cohesion of the cover soil, c	*0*	*psf*		
Interface friction angle at slip plane surface, delta	*20*	*degrees*	*0.35*	*radians*
Adhesion between materials at slip plane surface, c_a	*0*	*psf*		
Resultant of the pore pressure acting on the interwedge surfaces, Uh	104.5			
Resultant of the pore pressure acting perpendicular to the slope, Un	13038.3			
Resultant of the vertical pore pressure acting on the passive wedge, Uv	1812.1			
Total weight of the active wedge, W_A	28,208	lb		
Total weight of the passive wedge, W_p	3933	lb		
Effective force normal to the failure plane of the active wedge, N_A	15,129	lb		
a =	1,621			
b =	-6,773			
c =	183			
Factor of Safety =	**4.15**			

ASSUMES A FULLY-SATURATED SLOPE (WORST CASE)

SAND

SAND/CLAY INTERFACE

CONSERVATIVE VALUES USED FOR PURPOSES OF ANALYSIS

Notes:

(1) The above calculations are based on "Analysis and Design of Veneer Cover Soils" by R.M. Koerner and Te-Yang Soong, published in Sixth International Conference on Geosynthetics (1998).

(2) Input paramaters in italics are assumed.

(3) For the purposes of this analysis, the slip plane is the interface between the cap clay layer and the overlying sand layer.

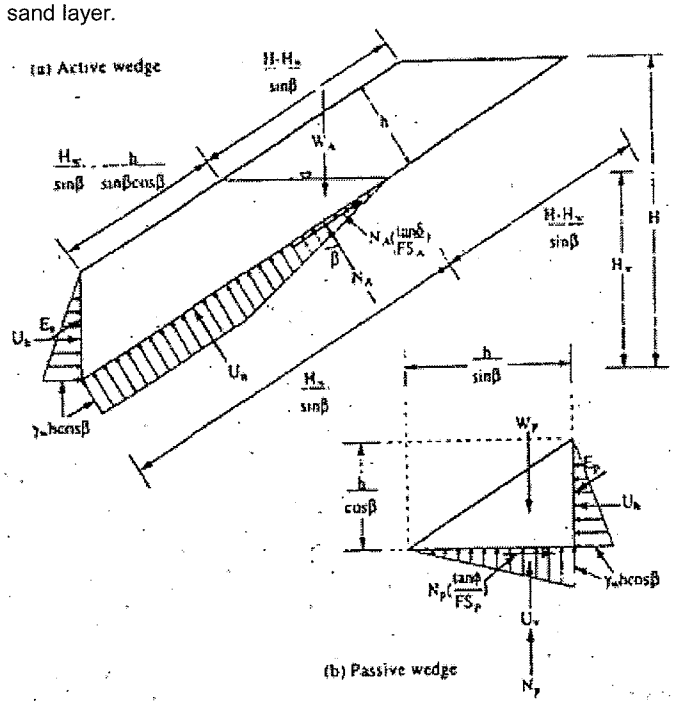

$$W_A = \left(\frac{\gamma_{sat'd}(h)(2H_w\cos\beta - h)}{\sin 2\beta}\right) + \left(\frac{\gamma_t(h)(H - H_w)}{\sin\beta}\right) \quad (23)$$

$$U_n = \frac{\gamma_w(h)(\cos\beta)(2H_w\cos\beta - h)}{\sin 2\beta} \quad (24)$$

$$U_h = \frac{\gamma_w h^2}{2} \quad (25)$$

$$N_A = W_A(\cos\beta) + U_h(\sin\beta) - U_n \quad (26)$$

$$W_P = \frac{\gamma_{sat'd} h^2}{\sin 2\beta} \quad (28)$$

$$U_V = U_h \cot\beta \quad (29)$$

$$a = W_A \sin\beta\cos\beta - U_h\cos^2\beta + U_h$$

$$h = -W_A \sin^2\beta\tan\phi + U_h\sin\beta\cos\beta\tan\phi - N_A\cos\beta\tan\delta - (W_P - U_V)\tan\phi$$

$$c = N_A \sin\beta\tan\delta\tan\phi \quad (31)$$

(Koerner & Soong, 1998)

Project No.: _____
Subject: GE Fletcher Paint

By: JEM Date: 05-20-11
Ckd By: _____ Date: _____

Cover System Drainage Outlet Capacity Analysis

Cover System Area, A (acres) =	0.80	
HELP Model Peak Daily Drainage Volume from Drainage Layer (cu ft/day/acre)	135.93	
Peak Daily Drainage Volume from Drainage Layer, Q (cu ft/day)	108.75	

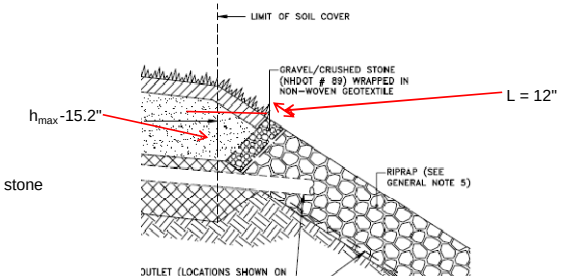

1. Calculate Required Permeability of Stone Drain

Maximum head, h_{max}, (inches)	15.2	maximum head assumed to be at the top of the drain stone
Height of Drain Stone, H (inches)	17	
Length of Drain, L (inches)	12	
Hydraulic gradient, $i = h_m/L$ =	1.27	
Factor of Safety for Stone Drains, FS =	20	from Seepage, Drainage and Flow Nets, Harry R. Cedergren
From Darcy's Law; k_{req} (ft/day) = FS X Q/iA =	**1212**	

2. Estimate Permeability of NHDOT #89 Stone Drain

Table 1E -- Required Grading, Graded Coarse Aggregates (English)

Standard Stone Size	#4	#357	#467	#57	#67	#7	#89
Min to Max	3/4 in to 1-1/2 in	No. 4 to 2 in	No. 4 to 1-1/2 in	No. 4 to 1 in	No. 4 to 3/4 in	No. 4 to 1/2 in	No. 16 to 3/8 in
Sieve Size	Percentage by Weight Passing						
2-1/2 in	---	100	---	---	---	---	---
2 in	100	95-100	100	---	---	---	---
1-1/2 in	90-100	---	95-100	100	---	---	---
1 in	20-55	35-70	---	95-100	100	---	---
3/4 in	0-15	---	35-70	---	90-100	100	---
1/2 in	---	10-30	---	25-60	---	90-100	100
3/8 in	0-5	---	10-30	---	20-55	40-70	90-100
No. 4	---	0-5	0-5	0-10	0-10	0-15	20-55
No. 8	---	---	---	0-5	0-5	0-5	5-30
No. 16	---	---	---	---	---	---	0-10
No. 50	---	---	---	---	---	---	0-5

Gradation of NHDOT #89 crushed stone used for drain outlet

(Reference: NHDOT Standard Specifications for Road and Bridge Construction, 2006)

TABLE 9.1 Discharge Capacities of 3 × 2 ft Cross Section of Stone-Filled Drains

Size of stone	Permeability, ft/day	Slope	Capacity cu ft/day	Capacity gpm
3/4 to 1 in.	120,000	0.01	7200	38
3/4 to 1 in.	120,000	0.001	720	4
3/8 to 1/2 in.	30,000	0.01	1800	9
3/8 to 1/2 in.	30,000	0.001	180	1
1/4 to 3/8 in.	6,000	0.01	360	2
1/4 to 3/8 in.	6,000	0.001	36	0.2

Estimated permeability of NHDOT #89 crushed stone = **6000 ft/day > 1212 ft/day; OK**

(Reference: Seepage, Drainage and Flow Nets, Harry R. Cedergren)

Attachments

Figure 1 – Site Map Showing Design Slope

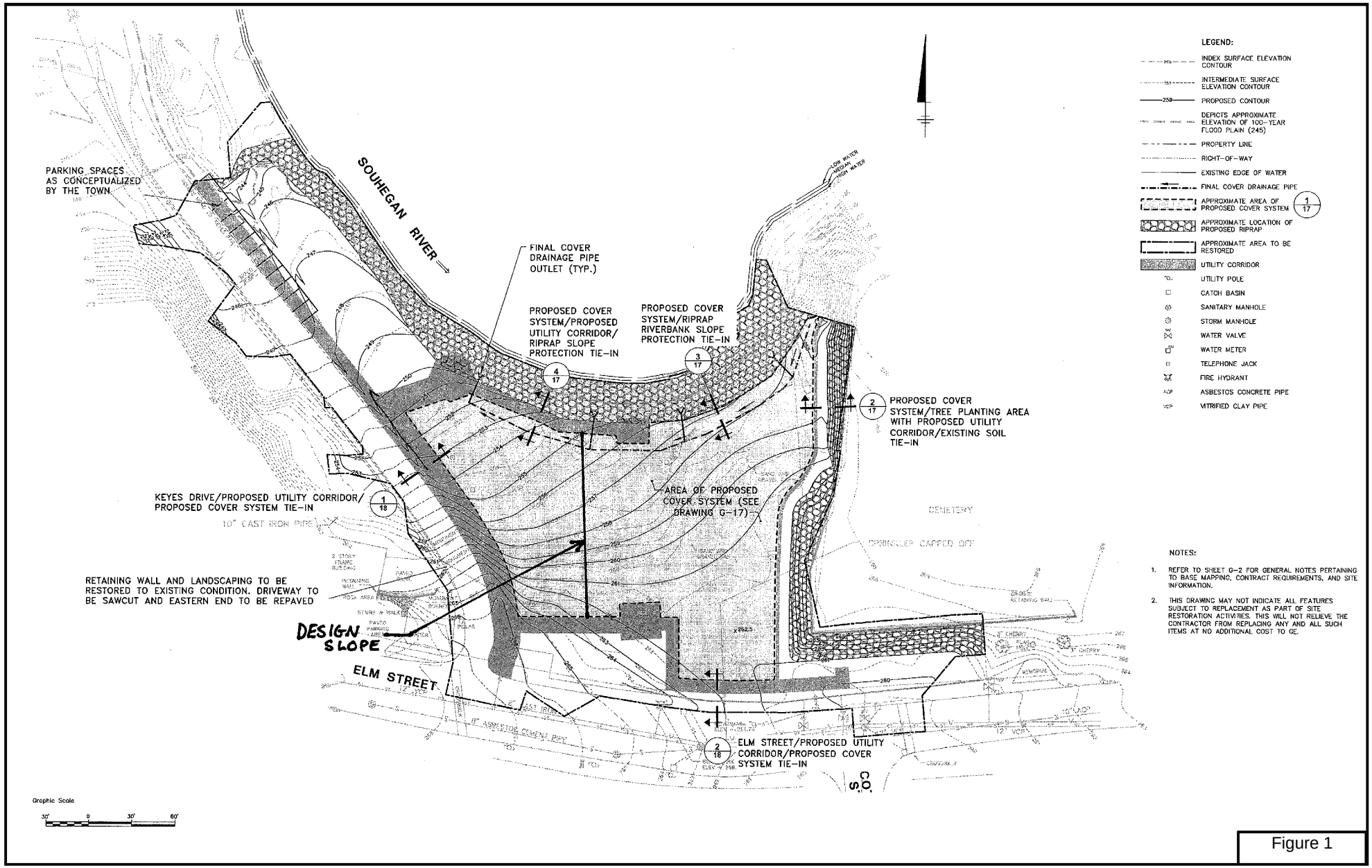

NOTES:

1. REFER TO SHEET G-2 FOR GENERAL NOTES PERTAINING TO BASE MAPPING, CONTRACT REQUIREMENTS, AND SITE INFORMATION.
2. THIS DRAWING MAY NOT INDICATE ALL FEATURES SUBJECT TO REPLACEMENT AS PART OF SITE RESTORATION ACTIVITIES. THIS WILL NOT RELIEVE THE CONTRACTOR FROM REPLACING ANY AND ALL SUCH ITEMS AT NO ADDITIONAL COST TO GE.

Figure 1

Figure 2 – Proposed Cover System

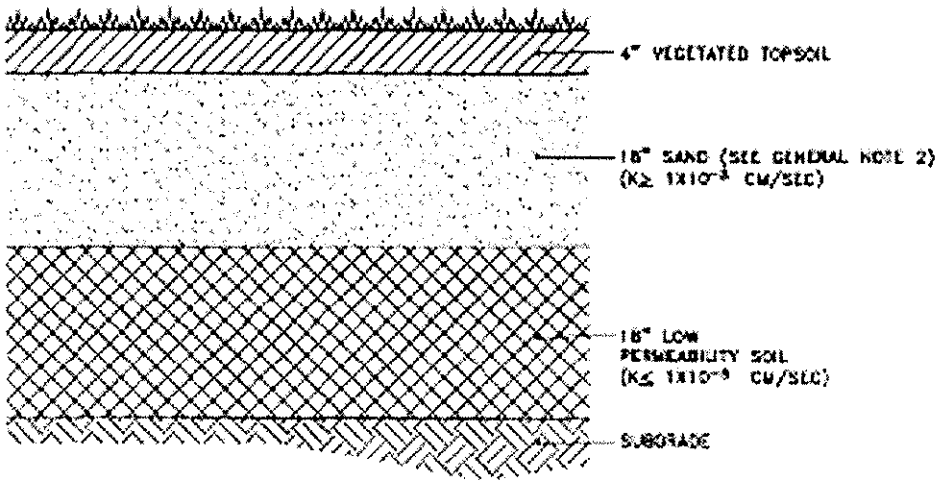

PROPOSED COVER SYSTEM (1)

NOT TO SCALE

Figure 2

Riprap Bank Protection Design Calculations

ARCADIS BBL
Infrastructure, environment, facilities

Calculation Sheet

Client: General Electric Company
Prepared by: Caitlin Mahon and Thomas Steiner, P.E.
Title: Fletcher's Paint Works and Storage Facility
Subject: Elm Street Area Riprap Bank Protection Design

Project: 20985.002
Date: 5/29/2007
Reviewed By: WAR
Date: 5/29/07
Revised: 12-28-07

Objective:

Determine the minimum riprap size (D_{50}) and riprap placement geometry needed to protect the restored river bank of the Souhegan River at the Elm Street Site (the Site) during a 100-year peak discharge event.

References:

1. Figure 1, titled "Site Map and HEC-RAS Model Transect Locations." ARCADIS BBL. May 2007 (attached).
2. Figures 2, 3, and 4. Cross-sections at Transects 15, 16, and 14 (i.e., T-15, T-16, and T-14), respectively, with predicted flood elevations. ARCADIS BBL. May 2007 (attached).
3. HEC-RAS River Analysis System. Version 3.0.1. United States Army Corps of Engineers (USACE) Hydrologic Engineering Center. March 2001 (output attached).
4. Flood Insurance Study, Town of Milford, New Hampshire, Hillsborough County. Federal Emergency Management Agency (FEMA). November 1979.
5. Hydraulic Design of Flood Control Channels. EM 1110-2-1601. United States Army Corps of Engineers (USACE). June 1994.
6. Hydraulic Engineering Circular No. 11 – Design of Riprap Revetment. United States Department of Transportation (USDOT). March 1989 (Table 2, attached).

ARCADIS BBL
Infrastructure, environment, facilities

Calculation Sheet

Assumptions:

1. Riprap along the river bank will be designed for a 100-year peak discharge event to reduce long-term maintenance requirements. Riprap near the toe of the river bank (i.e., below the 2-year flood stage) will be oversized to offer additional protection from floating debris and ice during more frequent high flow events.
2. To the extent practicable, riprap placement requirements will minimize the amount of riprap projecting out into the main channel of the river to:
    a. minimize the amount of riprap that may need to be removed and disposed of during anticipated future remedial work within the main river channel (i.e., facilitating waste-minimization objectives), and
    b. minimize the projection of riprap into the navigable waterway.
3. The upstream and downstream ends of the riprap bank protection will terminate in areas of low bank erosion potential (i.e., existing bank is well-protected with dense and/or woody vegetation, existing bank is in an area of low flow energy, or existing bank consists of exposed bedrock). Therefore, no additional thickness of riprap will be provided at the upstream and downstream ends of the proposed riprap bank protection. Additionally, bedrock will not be excavated to achieve riprap design thicknesses (i.e., bedrock material already constitutes a non-erodible surface). However, if required (i.e., if top surface of riprap is not already flush with original face of bank) smooth transitions (e.g., 4H:1V slope) will be provided at the ends of the riprap bank protection, where practicable.
4. The river bottom at the toe of the riprap bank protection is assumed to be relatively non-erodable due to the presence of cobble- and boulder-sized material within the channel bottom and the presumed presence of parent bedrock material in close proximity to the channel bottom (i.e., based on field observations of areas of exposed bedrock within and/or in close proximity to the proposed location of the riprap bank protection). Therefore, a launching toe will not be provided
5. A maintenance and monitoring program will be established to monitor the long-term

performance of the riprap bank protection (i.e., looking for possible signs of erosion, sloughing, loss of stones due to vandalism, etc.) and to allow for maintenance of the riprap bank protection, if needed (e.g., replacement of riprap material, placement of additional and/or larger riprap material).

6. Riprap will consist of angular rock with a unit weight of approximately 160 pounds per cubic foot (pcf).
7. The river channel geometry is represented by 21 river transects in the HEC-RAS model (see Reference 1, attached). HEC-RAS model output (Reference 3) and channel geometry (Reference 2) for T-15 (River Station 2370) are used to size the riprap due the transect's proximity to the Site and location along the river bend (i.e., closest transect to the sharpest point of curvature in the river bend).
8. The 100-year peak discharge for the Souhegan River at the Site is approximately 10,080 cubic feet per second (cfs) (Reference 4).
9. The center-line radius of the riverbend at T-15 is approximately 123 feet (ft) (Reference 1).
10. The water-surface width at T-15 is approximately 160 ft, based on field survey data and Reference 2 (i.e., distance between bank stations).
11. The modeled average channel velocity at T-15 is approximately 3.5 ft/sec (fps) (Reference 3). Note that the modeled average channel velocities at the next upstream and next downstream transects (i.e., T-16 and T-14, respectively) are higher (i.e., approximately 5.99 fps and 5.48 fps, respectively) due to the reduced cross-sectional flow area at those locations. However, as shown in the calculations below, the local depth-averaged side slope velocity at T-15 (i.e., the flow velocity on the outside of the bend) is anticipated to be greater than the average channel velocities upstream and downstream of the channel bend due to the sharp center-line radius of curvature of the river bend.
12. The average channel depth (i.e., hydraulic depth) at T-15 is approximately 16.4 ft (Reference 3).

ARCADIS BBL
Infrastructure, environment, facilities

Calculation Sheet

Calculations:

Riprap Size on River Bank

$$D_{30} = S_f C_s C_V C_T d \left[\left(\frac{\gamma_w}{\gamma_s - \gamma_w} \right)^{1/2} \frac{V_{ss}}{\sqrt{K_1 g d}} \right]^{2.5}$$

Where:

D_{30} = riprap size of which 30 percent is finer by weight (ft)

S_f = safety factor

C_s = stability coefficient for incipient failure

C_V = vertical velocity distribution coefficient

C_T = thickness coefficient

d = local depth of flow (ft)

γ_w = unit weight of water (pcf)

γ_s = unit weight of stone (pcf)

V_{ss} = local depth averaged velocity for side slope riprap (fps)

K_1 = side slope correction factor

g = gravitational constant (ft/s^2)

S_f = 1.1 (minimum recommended value)

C_s = 0.30 (recommended value for angular rock)

C_V = 1.283 – 0.2 log(R/W), (recommended value for outside of bend)

Where:

R = center-line radius of river bend (ft)

W = water-surface width (ft)

Therefore, C_V = 1.283 – 0.2 log(123/160) = 1.31

C_T = 1.0 (recommended value for riprap thickness t = 1.5*D_{50} or t = D_{100}, whichever is greater)

Calculation Sheet

d = 16.4 ft

γ_w = 62.4 pcf

γ_s = 160 pcf

$V_{ss} = V_{avg}(1.74 - 0.52 \log[R/W])$

Where:

V_{avg} = local depth-averaged velocity (ft/s) = 3.5 fps

Therefore, V_{ss} = 3.5(1.74 - 0.52 log[123/160]) = 6.3 fps

$$K_1 = \sqrt{1 - \frac{\sin^2\theta}{\sin^2\phi}}$$

Where:

θ = angle of side slope with horizontal

ϕ = angle of repose of riprap material

Therefore,

θ = 33.69° (1.5H:1V side slope)

ϕ = 40° (Recommended value based on Reference 5)

$$K_1 = \sqrt{1 - \frac{\sin^2 33.69°}{\sin^2 40°}} = 0.51$$

g = 32.2 ft/s^2

Therefore,

$$D_{30} = 1.1 \cdot 0.30 \cdot 1.31 \cdot 1.0 \cdot 16.4 \left[\left(\frac{62.4}{160 - 62.4} \right)^{1/2} \frac{6.3}{\sqrt{0.51 \cdot 32.2 \cdot 16.4}} \right]^{2.5} = 0.37\text{ft} = 4.5\text{inches(in)}$$

The relationship between D_{30} and D_{50} (riprap size of which 50 percent is finer by weight) is approximately D_{30}/D_{50} = 0.66, based on interpolation of the information provided in Reference 6

Calculation Sheet

(Table 2).

Therefore,

D_{50} = 0.37/0.66 = 0.57 ft = 6.8 in

Riprap Size at Toe of River Bank

Because a Gabion Retaining Wall will be installed at the toe of the river bank along the entire length of the site, riprap protection at the toe is not neccesary and therefore not designed for in this calculation.

Summary:

Minimum recommended riprap sizes required to protect the restored river bank of the Souhegan River at the Site during a 100-year peak discharge event are as follows:

Riprap Properties	Minimum Requirements Bank Riprap
D_{min} (0.5*D_{50})	4 in
D_{50} (1.0*D_{50})	7 in
D_{max} (1.5*D_{50})	11 in
Layer Thickness (1.5*D_{max})	17 in

The riprap bank protection should be underlain with a non-woven geotextile or a graded gravel filter to reduce the potential for erosion of soil materials from underneath the riprap.

Attachments

Figure 1 – Site Map and HEC-RAS Model Transect Locations

[SYR-85 KEW] SYR-85 KEW
Fletch Paint (20893.001)
R:\GE_GIS\GE_FletcherPaint\SougheganRiver\Basemapping\mxd\ModelTransectLocation.mxd - 5/9/2007 @ 1:00:55 PM

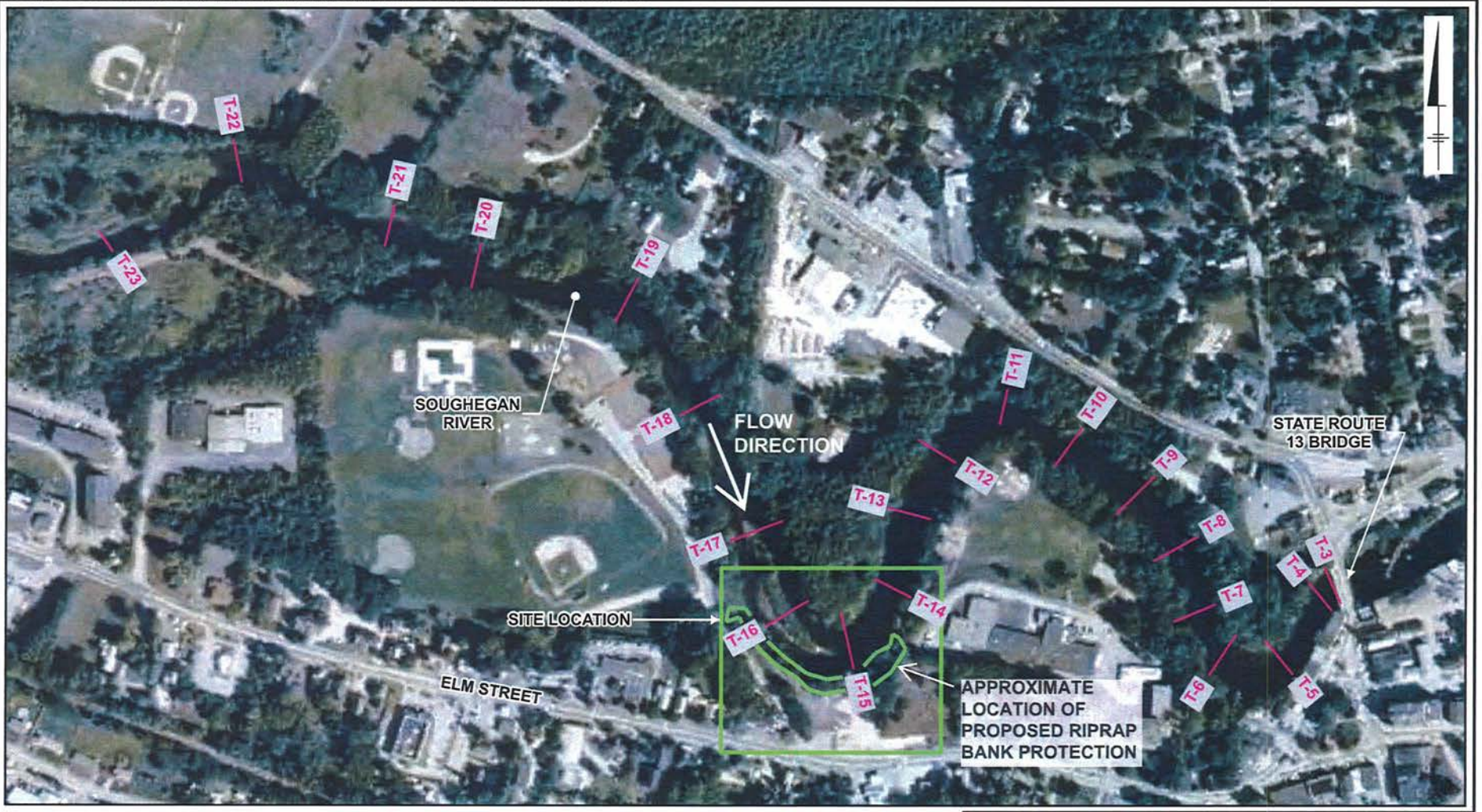

LEGEND:

HEC-RAS MODEL TRANSECT

NOTE:

1. AERIAL PHOTOGRAPHY PROVIDED BY THE NEW HAMPSHIRE GEOGRAPHICALLY REFERENCED ANALYSIS AND INFORMATION TRANSFER SYSTEM.

0 400 800 Feet

GRAPHIC SCALE

SITE MAP AND HEC-RAS MODEL TRANSECT LOCATIONS

ARCADIS BBL
Infrastructure, environment, facilities

FIGURE
1

Figure 2 – Cross-Section at Transect 15 with Predicted Flood Elevations

5/15/2007
G:\Waterfront\Milford FIS\Transect Figures.xlsTransect 15

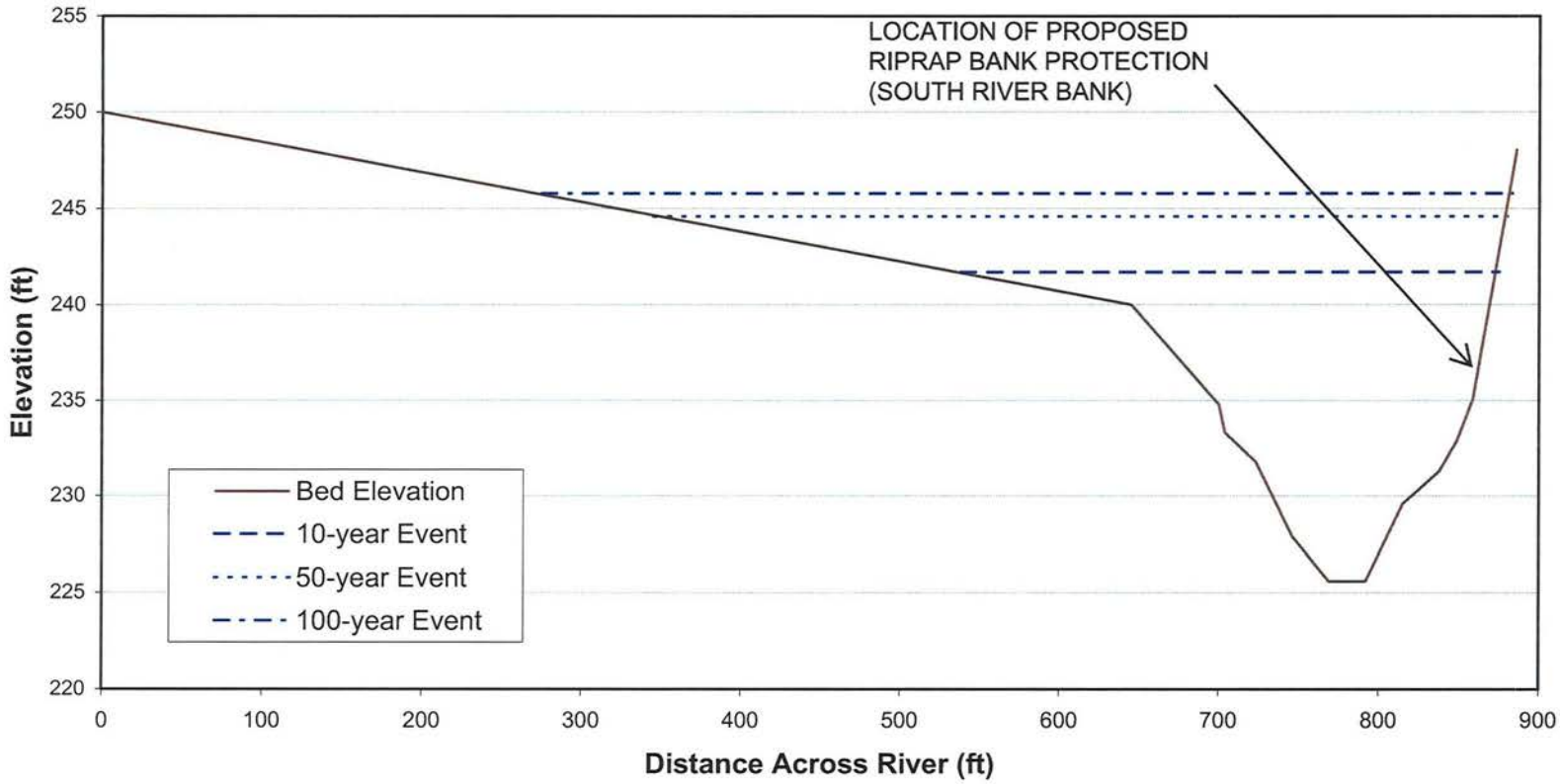

Note:
1. ft = feet in NAVD88
2. Distance across river is measured from Left bank to Right bank looking downstream.

CROSS-SECTION AT TRANSECT 15 WITH PREDICTED FLOOD ELEVATIONS

ARCADIS BBL
Infrastructure, environment, facilities

FIGURE
2

Figure 3 – Cross-Section at Transect 16 with Predicted Flood Elevations

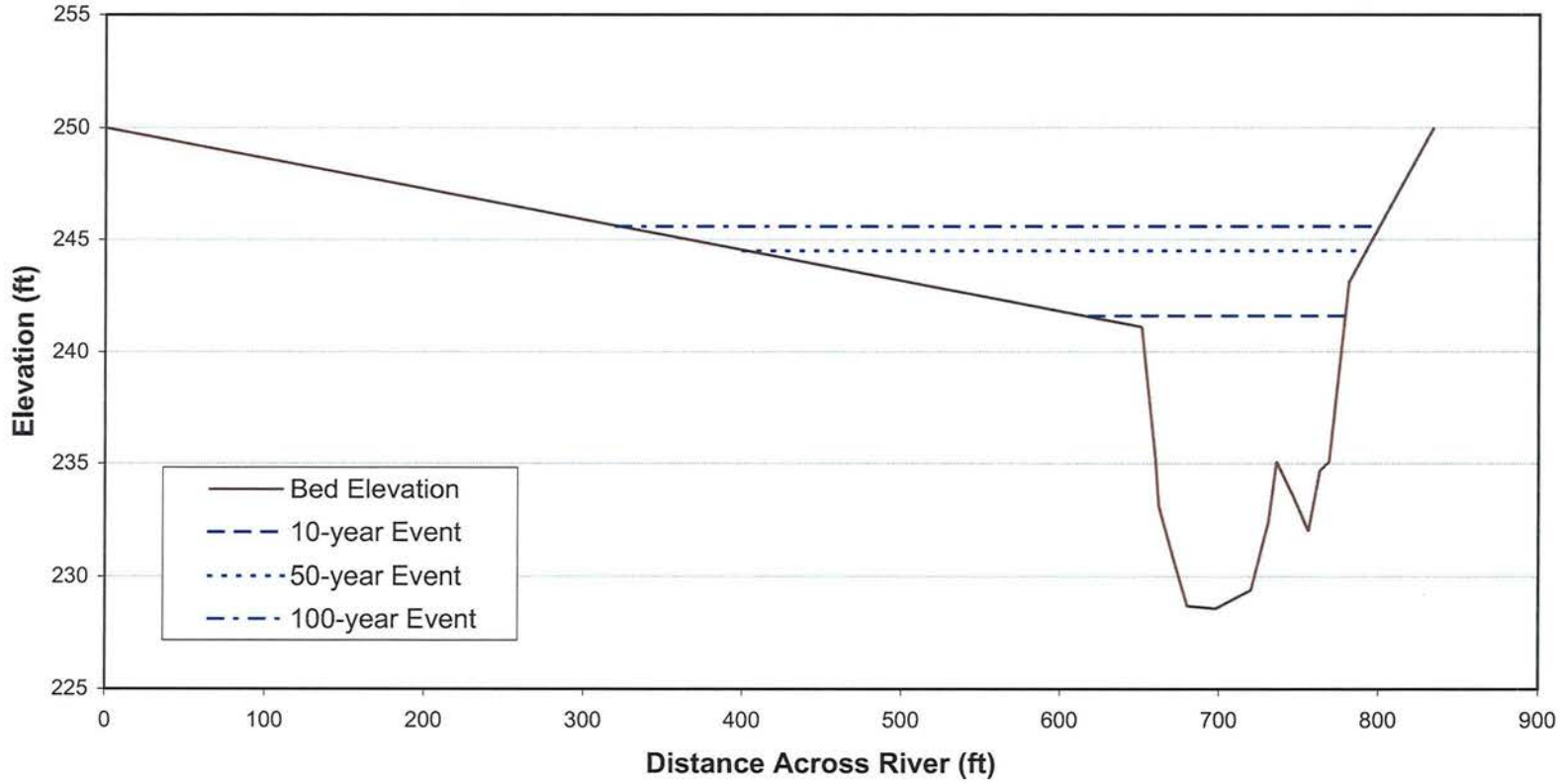

Note:
1. ft = feet in NAVD88
2. Distance across river is measured from Left bank to Right bank looking downstream.

CROSS-SECTION AT TRANSECT 16 WITH PREDICTED FLOOD ELEVATIONS

ARCADIS BBL
Infrastructure, environment, facilities

FIGURE
3

Figure 4 – Cross-Section at Transect 14 with Predicted Flood Elevations

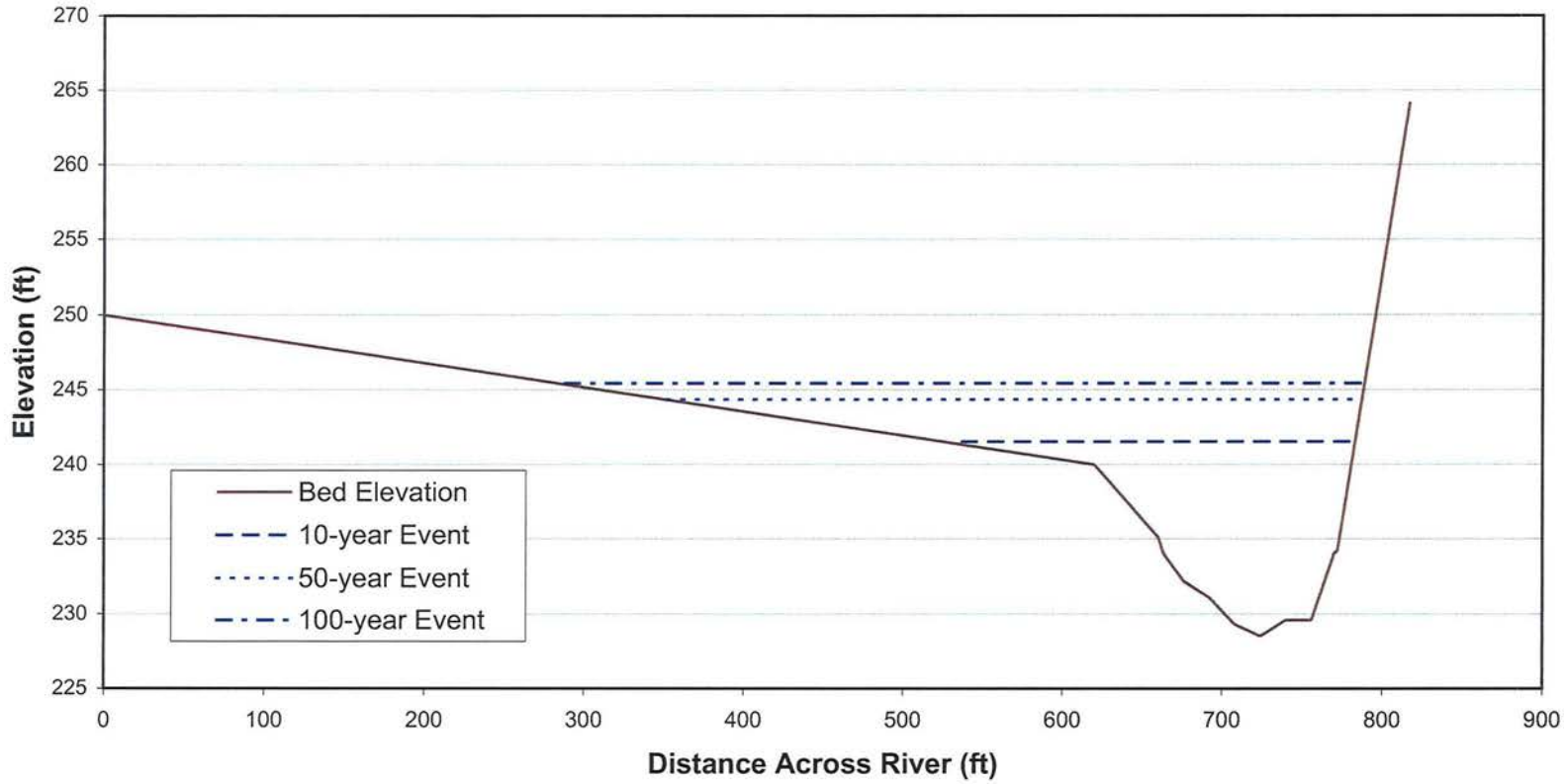

Note:
1. ft = feet in NAVD88
2. Distance across river is measured from Left bank to Right bank looking downstream.

CROSS-SECTION AT TRANSECT 14 WITH PREDICTED FLOOD ELEVATIONS

ARCADIS BBL
Infrastructure, environment, facilities

FIGURE
4

HEC-RAS Output

Profile Output Table - Standard Table 1
HEC-RAS Plan: Plan 01 River: Souhegan Reach 1

Rivers 1
Hydraulic Reaches = 1
River Stations = 21
Plans 1
Profiles 4

River Station		Total Discharge	Channel Velocity	Channel Top Width	Channel Hydraulic Depth
		(cfs)	(ft/s)	(ft)	(ft)
T-23	5170	10080	7.14	65	17.26
T-22	4770	10080	4.77	119	17.4
T-21	4370	10080	4.27	114	14.7
T-20	3970	10080	5.03	125	14.47
T-19	3570	10080	4.37	135	15.94
T-18	3170	10080	5.66	119	13.6
T-17	2770	10080	4.97	154	12.2
T-16	2570	10080	5.99	109	14.44
T-15	2370	10080	3.5	159	16.4
T-14	2170	10080	5.48	112	14.74
T-13	1970	10080	5.97	119	12.84
T-12	1770	10080	5.81	121	13.13
T-11	1570	10080	6.87	96.5	14.31
T-10	1370	10080	5.28	133	13.95
T-9	1170	10080	5.48	144	12.3
T-8	970	10080	6.04	133	11.85
T-7	770	10080	7.06	120	11.08
T-6	570	10080	6.61	133	10.65
T-5	370	10080	7.02	119	11.59
T-4	170	10080	8.07	97	12.59
T-3	95	10080	6.66	112	13.45

HEC-11 Design of Riprap
Revetment – Table 2

4.2 ROCK GRADATION

The gradation of stones in riprap revetment affects the riprap's resistance to erosion. The stone should be reasonably well graded throughout the riprap layer thickness. Specifications should provide for two limiting gradation curves, and the stone gradation (as determined from a field test sample) should lay within these limits. The gradation limits should not be so restrictive that production costs would be excessive. Table 2 presents suggested guidelines for establishing gradation limits. Table 3 presents six (6) suggested gradation classes based on AASHTO specifications. Form 3 (appendix C) can be used as an aid in selecting appropriate gradation limits.

It is recognized that the use of a four (4) point gradation as specified in table 2 might in some cases be too harsh a specification for some smaller quarries. If this is the case, the 85 percent specification can be dropped as is done in table 3. In most instances, a uniform gradation between D_{50} and D_{100} will result in an appropriate D_{85}.

Each load of riprap should be reasonably well graded from the smallest to the maximum size specified. Stones smaller than the specified 5 or 10 percent size should not be permitted in an amount exceeding 20 percent by weight of each load.

Table 2. Rock riprap gradation limits.

Stone Size Range* (ft.)	Stone Weight Range (lb)	Percent of Gradation Smaller Than
1.5 D_{50} to 1.7 D_{50}	3.0 W_{50} to 5.0 W_{50}	100
1.2 D_{50} to 1.4 D_{50}	2.0 W_{50} to 2.75 W_{50}	85
1.0 D_{50} to 1.15 D_{50}	1.0 W_{50} to 1.5 W_{50}	50
0.4 D_{50} to 0.6 D_{50}	0.1 W_{50} to 0.2 W_{50}	15

Slope Stability/Gabion Wall
Design Calculations

ARCADIS
Infrastructure, environment, buildings

Imagine the result

Calculation Sheet

Client: General Electric Company **Project:** B0020985.0002.00005
Prepared by: Jason Thorpe **Date:** 7/10/2010
Title: Fletcher's Paint Works and Storage Facility **Reviewed By:** APC
Subject: Elm Street Area Bank Slope Stability Design **Date:** 7/19/2010

Objective:

Design a gabion wall along the bank of the Souhegan River at the Fletcher's Paint Elm Street site, and analyze the design geometry for stability against sliding, overturning, bearing failure as well as overall global stability of the wall.

References:

1. Drawing G-2, entitled "Existing Conditions – Elm Street Area" ARCADIS. June 2010.
2. Drawing G-21, entitled "Final Grading Plan – Elm Street Area" ARCADIS. June 2010.
3. Drawing G-23, entitled "Site Restoration Plan – Elm Street Area" ARCADIS. June 2010.
4. GawacWin2003, Maccaferri INC. (USA).
5. Gabion Walls Design Manual. Modular Gabion Systems, A Division of C.E. Shepard Company. November 2004.
6. Geotecnical Engineering Principles and Practices. Donald P. Coduto. 1999.
7. NAVFAC DM-7.1 Soil Mechanics. Department of the Navy - Naval Facilities Engineering Command. May 1982.
8. U.S. Army Corps of Engineers. *Design of Sheet Pile Walls*, Manual No. 1110-2-2504, March 1994.
9. Water Monitoring Report – June 2010. ARCADIS. June 2010.
10. Supplemental Geotechnical Investigation Data Summary Report, Fletcher's Paint Works and Storage Facility Superfund Site, Milford, NH. ARCADIS, November 2009.
11. SLOPE/W 2007, Geo-Slope International Ltd. Calgary, Alberta, Canada.
12. AASHTO M288-05, Standard Specification for Geotextile Specification for Highway Applications, January 2006.

Calculation Sheet

Assumptions:

1. Geometry used to generate cross-sections used for slope stability and retaining wall designs presented herein was obtained from Reference 2.
2. Existing soil information was established from boring log information collected at the site during the Fall 2009 geotechnical investigation. Soil parameters were developed using classifications obtained from boring logs (Reference 10) and based on empirical relationships outlined in Reference 8.
3. The design and analyses provided herein use the following soil parameters:

Material	Unit Weight (pcf)	Cohesion (psf)	ϕ (degrees)
Gabion Rockfill (Reference 4 and 5)	145	0	45
Riprap (Reference 6)	130	0	36
Select Fill (References 7)	120	0	34
Existing Sand and Gravel (References 8 and 10)	125	0	30
Bedrock (Reference 10)	Impenetrable		

4. Water surface information was based on staff gauge readings and monitoring well levels recorded at the site (Reference 9).
5. Bedrock elevation was determined using information presented in Reference 10.
6. Minimum acceptable factor of safety is 1.3 for slope stability analyses performed under static conditions. Minimum factor of safety is 1.5 for retaining wall calculations (i.e. overturning and sliding resistance).

Evaluation (Existing Slope):

The slope stability evaluation for the existing slope was performed using the SLOPE/W computer program by Geo-Slope International, Ltd. (Reference 11). The static analysis was performed using the Spencer method, which satisfies both moment and force equilibrium. The resulting factor of safety for the existing slope was determined to be 0.75 for the typical slope configuration as shown on Drawing G-21 and in Attachment A.

Calculation Sheet

Since the calculated factor of safety is less than 1.3, the current static stability for the bank slope is considered unacceptable and results show a high likelihood of failure under the current configuration. Detailed output from this analysis, including a figure showing the critical slip surface, is provided in Attachment A.

Evaluation (Gabion Gravity Retaining Wall):

An engineering modification is required to stabilize the slope in order to meet a factor of safety of 1.3 for global stability under final restoration. This was accomplished by designing a gabion retaining wall at the base of the slope and backfilling with select fill and riprap to create a flatter bank slope.

The gabion retaining wall was designed using the GawacWin2003 computer program by Maccaferri (Reference 4) and the external forces verified using procedures outlined in References 5 and 6. GawacWin2003 was used to determine the factors of safety against overturning and sliding, as well as global stability, and was also used to determine the required bearing capacity of the foundation soils. For global stability, GawacWin2003 uses the Bishop method to conduct the soil-wall overall stability check, analyzing circular failure surfaces which develop around the structure, automatically searching for the most critical failure surface (the surface with the lowest safety factor against the structure failure) using the Simplex method which consists of searching for the minimum of an equation formed by more than one variable (References 4 and 5).

Using a critical slope cross-section based on height and steepness of the existing slope (References 1 and 2), it was determined that a 9 foot high gabion wall installed near the toe of the existing slope will be sufficient to stabilize the slope. The gabion wall will consist of 3 levels of gabions, with each gabion being 3 feet high. Each layer will also have a 1.5 foot step on the slope side of the wall. The base layer of gabions will be 6 foot wide and extend three feet into the current slope. The second layer will consist of 4.5 foot wide gabion basket the top layer will have a 3 foot wide basket. The gabion wall will be counter-sunk into the foundation 1.5 feet and have a wall batter of approximately 6 degrees. Detail 4 on Drawing G-27 shows a typical

Calculation Sheet

configuration of the proposed gabion wall. Additionally, drawing G-23 in the contract drawings shows the proposed location of the gabion wall and proposed grades of the final slope.
The following is a summary of the calculated factors of safety for the gabion retaining:

Factor of Safety Summary Table		
Overturning	**Sliding**	**Global Stability**
4.54	2.43	1.30

Also, a geotextile fabric was selected as a separation layer between the gabion wall and the sourrounding soil to prevent erosion of the materials through the gabion baskets. The non-woven geotextile selected is Mirafi 140NL (or approved equal) with an apparent opening size of 0.25 mm, and was conservatively selected based on grain-size data presented in Reference 10 and criterion given in Reference 12. A cut sheet of this geotextile fabric is included in Attachment B of this calculation package.

Detailed calculations from both GawacWin2003 and SLOPE/W 2007 for the Gabion Retaining Wall design, including figures showing proposed configurations are provided in Attachment B of this calculation package.

Summary:

Based on the factors of safety determined above, the existing slope does not show adequate stability to be used in the final restoration design of the Elm Street property. Therefore, a 9 foot high, rock-filled gabion wall will be installed, and select fill will be installed behind the wall to create a flatter, stable slope. The calculations provided herein establish that the proposed gabion wall configuration satisfies the design requirements for overturning, sliding and overall stability of the slope and the design is considered acceptable for design.

Attachments

Slope Stability Calculations
Existing Slope

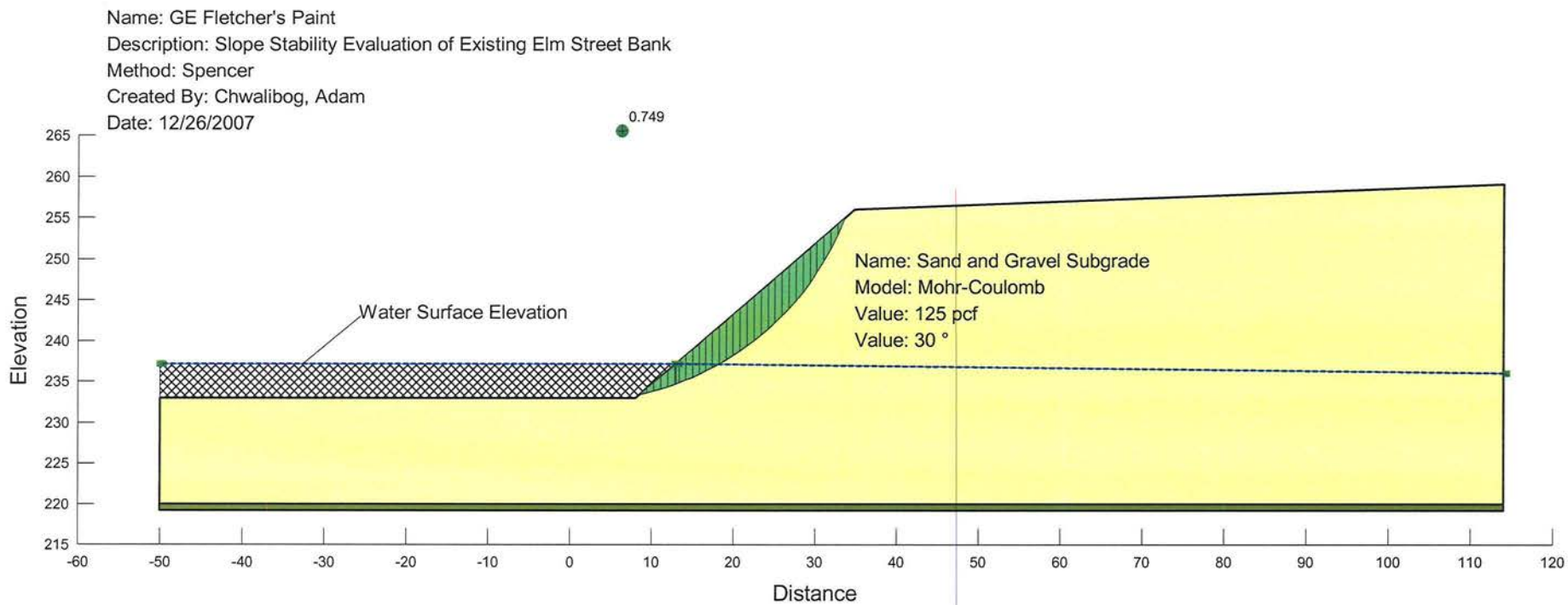

Figure 1 - Stability of Existing Slope

GE Fletcher's Paint

Report generated using GeoStudio 2007, version 7.03. Copyright © 1991-2007 GEO-SLOPE International Ltd.

File Information

Created By: Chwalibog, Adam
Revision Number: 27
Last Edited By: Chwalibog, Adam
Date: 12/27/2007
Time: 11:07:36 AM
File Name: Fletcher's Paint - Existing Slope.gsz
Directory: G:\GE\GE_Fletcher_Paint_Confidential\Notes and Data\Calculations\Geotech Calcs\

GE Fletcher's Paint

Description: Slope Stability Evaluation of Existing Elm Street Bank
Kind: SLOPE/W
Method: Spencer
Convergence
- Minimum Slice Thickness: 0.1
- Ignore seismic load in strength: No

Number of Slices: 30
Optimization Tolerance: 0.01
Direction of movement: Right to Left
Allow Passive Mode: 0
Slip Surface Option: Auto-Search
Apply Phreatic Correction: Yes
FOS Distribution Calculation: Constant
Optimize Critical Slip Surface Location: Yes
Cap Suction: No
Rapid Drawdown: No
PWP Conditions Source: Piezometric Line
Critical slip surfaces saved: 1
Optimize Critical Slip Surface
- Optimization Maximum Iterations: 2000
- Optimization Convergence Tolerance: 1e-007
- Starting Optimization Points: 8
- Ending Optimization Points: 16
- Complete Passes per Insertion: 1

Materials

Material 1: Sand and Gravel Subgrade

Model: Mohr-Coulomb
Unit Weight: 125 pcf

Cohesion: 0 psf
Phi: 30 °
Phi-B: 0 °
Pore Water Pressure
Piezometric Line: 1

Material 2: Bedrock

Model: Bedrock (Impenetrable)
Pore Water Pressure
Piezometric Line: 1

Regions

	Material	Points	Area (ft²)
Region 1	Sand and Gravel Subgrade	4,11,12,1,9,2,3,6,5	4379.38
Region 2	Bedrock	5,7,8,6	131.2

Points

	X (ft)	Y (ft)
Point 1	8	233
Point 2	34.8	256
Point 3	114	259
Point 4	-50	233
Point 5	-50	220
Point 6	114	220
Point 7	-50	219.2
Point 8	114	219.2
Point 9	13	237.2
Point 10	-50	237.2
Point 11	2	233
Point 12	5	233

Tension Crack

Tension Crack Option: (none)

Slip Surface Limits

Left Coordinate: (-50, 233) ft
Right Coordinate: (114, 259) ft

Piezometric Lines

	Adjust Piez Line By (ft)	Bound by Surface Layer
Piezometric Line 1	0	Yes

Piezometric Line 1

	X (ft)	Y (ft)
Coordinate	-49.6	237.2
Coordinate	13.4	237.2
Coordinate	114.4	236

Pressure Lines

	Pressure (Unit Weight) (pcf)
Pressure Line 1	62.4

Pressure Line 1

	X (ft)	Y (ft)
Coordinate	-50	237.2
Coordinate	12.8	237.2
Coordinate	13	237.2

Critical Slip Surfaces

	Number	FOS	Center (ft)	Radius (ft)	Entry (ft)	Exit (ft)
1	Optimized	0.664	(-156.723, 445.189)	19.06579	(27.5361, 249.736)	(8.4894, 233.411)
2	701	0.668	(-156.723, 445.189)	268.598	(27.2546, 249.493)	(8.50217, 233.422)

Slices of Slip Surface: Optimized

	X (ft)	Y (ft)	PoreWaterPressure (psf)	Base Normal Stress (psf)	Frictional Strength (psf)	Cohesive Strength (psf)
1	8.791644	233.65115	221.44281	227.58285	3.5449507	0

2	9.396136	234.1313	191.481	191.50691	0.014957598	0
3	10.000626	234.6115	161.51918	162.8016	0.7404011	0
4	10.60512	235.09165	131.55737	134.09629	1.4658446	0
5	11.209615	235.5718	101.60074	105.38968	2.1875487	0
6	11.833895	236.0304	72.986164	79.942122	4.0160241	0
7	12.477965	236.46735	45.717371	56.964592	6.493586	0
8	12.9	236.75365	27.849392	41.909178	8.1174216	0
9	13.2	236.9572	15.148374	38.148151	13.278927	0
10	13.436845	237.1179	5.0928055	37.909402	18.946671	0
11	13.500595	237.1707	1.7529665	31.04734	16.913114	0
12	13.923295	237.6071	-25.785198	25.519752	14.733835	0
13	14.71489	238.42425	-77.356472	16.699379	9.6413908	0
14	15.501735	239.1797	-125.07652	12.507652	7.2212964	0
15	16.283825	239.87345	-168.93365	11.151286	6.4381977	0
16	16.97053	240.45615	-205.80443	12.371268	7.142555	0
17	17.56185	240.9279	-235.68097	15.184158	8.7665776	0
18	18.153175	241.3997	-265.5443	17.998634	10.391516	0
19	18.7445	241.87145	-295.42084	20.811788	12.015691	0
20	19.378405	242.4081	-329.36744	20.557574	11.868921	0
21	20.05489	243.00975	-367.40961	19.276247	11.129146	0
22	20.731375	243.6114	-405.45178	17.994919	10.389371	0
23	21.407865	244.213	-443.48291	16.713592	9.6495966	0
24	22.063125	244.80755	-481.06703	14.376131	8.300063	0
25	22.69716	245.395	-518.18165	11.570552	6.6802615	0
26	23.3312	245.9824	-555.30784	8.7654368	5.0607273	0
27	23.96524	246.56985	-592.43403	5.9602054	3.4411262	0
28	24.549585	247.0827	-624.85778	5.6434661	3.2582567	0
29	25.08423	247.5209	-652.58906	7.3087891	4.2197314	0
30	25.61887	247.9591	-680.33479	8.9741121	5.1812061	0
31	26.16118	248.4378	-710.60141	7.6760131	4.4317483	0
32	26.711155	248.957	-743.39189	4.6056079	2.659049	0
33	27.261125	249.47615	-776.19559	1.5352026	0.88634965	0

Slices of Slip Surface: 701

	X (ft)	Y (ft)	PoreWaterPressure (psf)	Base Normal Stress (psf)	Frictional Strength (psf)	Cohesive Strength (psf)
1	8.809157	233.66205	220.78478	304.79921	48.505752	0
2	9.423133	234.14395	190.71978	170.10315	-11.903014	0
3	10.037111	234.62875	160.46835	144.53387	-9.1997744	0

4	10.651085	235.1165	130.03396	118.70057	-6.543334	0
5	11.26506	235.60715	99.416214	92.617069	-3.9254884	0
6	11.879035	236.10075	68.616135	66.275637	-1.3512869	0
7	12.49301	236.59735	37.629705	39.676256	1.1815762	0
8	12.9	236.92785	16.985923	21.90135	2.8379231	0
9	13.116835	237.10465	5.9540288	16.189495	5.9094489	0
10	13.316835	237.268	-4.2421907	15.117371	8.7280183	0
11	13.714875	237.59455	-24.824204	16.342468	9.4353284	0
12	14.34463	238.1132	-57.649479	18.079198	10.43803	0
13	14.974385	238.63505	-90.676177	19.568597	11.297935	0
14	15.604135	239.16015	-123.90967	20.811173	12.015336	0
15	16.233885	239.6885	-157.34184	21.808689	12.591252	0
16	16.86364	240.2202	-190.97303	22.559296	13.024615	0
17	17.493395	240.7552	-224.82285	23.064828	13.316485	0
18	18.123145	241.29355	-258.87434	23.327138	13.467929	0
19	18.7529	241.8353	-293.14683	23.344509	13.477959	0
20	19.382655	242.3804	-327.6232	23.118867	13.347684	0
21	20.012405	242.92895	-362.31039	22.650976	13.077547	0
22	20.642155	243.481	-397.21522	21.940447	12.667323	0
23	21.27191	244.0365	-432.34424	20.988127	12.117501	0
24	21.901665	244.5955	-467.69193	19.794902	11.428592	0
25	22.531415	245.15805	-503.25265	18.360515	10.600448	0
26	23.161165	245.7242	-539.04446	16.687124	9.6343156	0
27	23.79092	246.29395	-575.06148	14.774562	8.5300976	0
28	24.420675	246.8673	-611.2976	12.622713	7.2877266	0
29	25.050425	247.44435	-647.77023	10.232455	5.9077106	0
30	25.68018	248.0251	-684.46135	7.6048282	4.3906496	0
31	26.309935	248.6096	-721.39955	4.7402205	2.7367676	0
32	26.939685	249.19785	-758.56652	1.6390728	0.94631914	0

Gabion Wall Stability Calculations

Program released in license to: Arcadis

Project: GE-Fletcher's Paint Gabion Wall Design_revised_v1
File: Copy of Fletcher's Paint_revised_v1 Date: 7/20/2010

INPUT DATA

Wall data

Wall batter	:	6.00 deg
Rockfill unit weight	:	145.00 lb/ft³
Porosity of gabions	:	10.00 %
Geotextile in the backfill	:	Yes
Friction reduction	:	%
Geotextile on the base	:	Yes
Friction reduction	:	%
Mesh and the wire diam.:	:	8x10, ø 2.70 mm

Layer	Length ft	Width ft	Offset ft
1	6.00	3.00	-
2	4.50	3.00	0.00
3	3.00	3.00	0.00

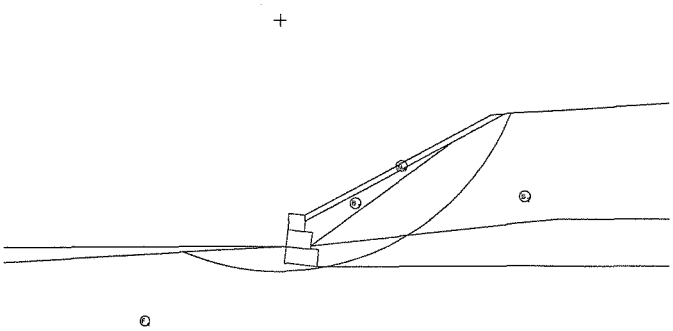

Backfill soil data

Inclination of Stretch 1	:	28.00 deg
Length of stretch 1	:	34.00 ft
Inclination of Stretch 2	:	3.80 deg
Soil unit weight	:	130.00 lb/ft³
Soil friction angle	:	36.00 deg
Soil cohesion	:	0.00 lb/ft²

Additional Backfill Layers

Layer	Initial height ft	Incl. angle deg	Unit weight lb/ft³	Cohesion lb/ft²	Friction angle deg
1	7.50	28.00	120.00	0.00	34.00
2	3.00	36.00	125.00	0.00	30.00

Maccaferri INC. is not responsible for the reliability of the geotechnical parameters assumed, or the improper use of the software. The program takes into account the physical characteristics of materials as manufacturated by the Maccaferri group; its results will not be realistic if a different material is used.

Program released in license to: Arcadis

Project: GE-Fletcher's Paint Gabion Wall Design_revised_v1
File: Copy of Fletcher's Paint_revised_v1 Date: 7/20/2010

Foundation data

Top surface height	:	3.00 ft
Top surface init. length	:	ft
Top surface incl. angle	:	3.00 deg
Soil unit weight	:	125.00 lb/ft³
Soil friction angle	:	30.00 deg
Soil cohesion	:	0.00 lb/ft²
Foundation allowable pressure	:	lb/ft²
Water table height	:	3.00 ft

Additional Foundation Layers

Layer	Depth ft	Unit weight lb/ft³	Cohesion lb/ft²	Friction angle deg

Water profile data

Initial height	:	3.00 ft
Inclination of the 1st stretch	:	6.00 deg
Length of the 1st stretch	:	45.40 ft
Inclination of the 2nd stretch	:	1.00 deg
Length of the 2nd stretch	:	ft

Loads data

Distributed loads on backfill			First stretch	:	lb/ft²
			Second stretch	:	lb/ft²
Distributed loads on wall			Load	:	lb/ft²
Line loads on backfill					
Load 1	:	lb/ft	Distance from wall face	:	ft
Load 2	:	lb/ft	Distance from wall face	:	ft
Load 3	:	lb/ft	Distance from wall face	:	ft
Line load on wall					
Load	:	lb/ft	Distance from wall face	:	ft

Seismic action data

Horizontal coefficient	:	Vertical coefficient	:

Maccaferri INC. is not responsible for the reliability of the geotechnical parameters assumed, or the improper use of the software. The program takes into account the physical characteristics of materials as manufacturated by the Maccaferri group; its results will not be realistic if a different material is used.

STABILITY ANALYSIS RESULTS

Active and Passive Thrust

Active Thrust	: 4813.99 lb/ft
Point of application ref. to X axis	: 5.31 ft
Point of application ref. to Y axis	: 2.37 ft
Direction of the thrust ref. to X axis	: 48.43 deg
Passive Thrust	: 1006.34 lb/ft
Point of application ref. to X axis	: 0.11 ft
Point of application ref. to Y axis	: 1.00 ft
Direction of the thrust ref. to X axis	: -3.00 deg

Sliding

Normal force on the base	: 8904.02 lb/ft
Point of application ref. to X axis	: 2.94 ft
Point of application ref. to Y axis	: -0.31 ft
Shear force on the base	: 1265.18 lb/ft
Resisting force on the base	: 6267.00 lb/ft
Sliding Safety Coefficient	**: 2.43**

Overturning

Overturning Moment	: 7569.26 lb/ft x ft
Restoring Moment	:34353.07 lb/ft x ft
Overturning Safety Coefficient	**: 4.54**

Stresses Acting on Foundation

Eccentricity	: 0.05 ft
Normal stress on outer border	: 1612.11 lb/ft²
Normal stress on inner border	: 1425.93 lb/ft²
Max. allowable stress on the foundation	: 2992.93 lb/ft²

Maccaferri INC. is not responsible for the reliability of the geotechnical parameters assumed, or the improper use of the software. The program takes into account the physical characteristics of materials as manufacturated by the Maccaferri group; its results will not be realistic if a different material is used.

Overall Stability

Initial distance at pivot leftside	:	ft
Initial distance at pivot rightside	:	ft
Initial depth referred to base	:	ft
Max depth allowed in calculation	:	ft
Center of the arch referred to X axis	:	-0.80 ft
Center of the arch referred to Y axis	:	44.12 ft
Radius of the arch	:	45.76 ft
Number of search surfaces	:	57
Overall Stability Safety Coefficient	**:**	**1.30**

Internal Stability

Layer	H ft	N lb/ft	T lb/ft	M lb/ft x ft	τ_{Max} lb/ft²	τ_{All} lb/ft²	σ_{Max} lb/ft²	σ_{All} lb/ft²
1	6.12	4315.67	869.04	9880.61	193.12	1285.18	942.50	15263.27
2	2.98	1327.40	96.54	2209.43	32.18	815.79	398.74	

Maccaferri INC. is not responsible for the reliability of the geotechnical parameters assumed, or the improper use of the software. The program takes into account the physical characteristics of materials as manufacturated by the Maccaferri group; its results will not be realistic if a different material is used.

Program released in license to: Arcadis

Project: GE-Fletcher's Paint Gabion Wall Design_revised_v1
File: Copy of Fletcher's Paint_revised_v1 Date: 7/20/2010

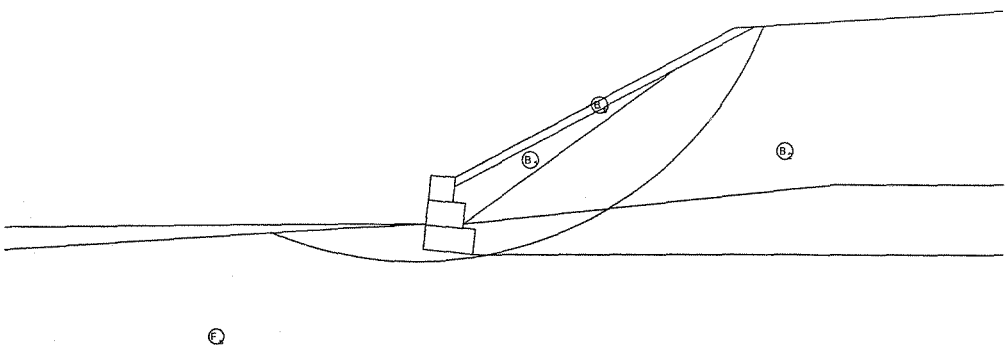

SOIL DATA

Soil	γ lb/ft³	c lb/ft²	ϕ deg	Soil	γ lb/ft³	c lb/ft²	ϕ deg
B_s	130.00	0.00	36.00	F_s	125.00	0.00	30.00
B_1	120.00	0.00	34.00				
B_2	125.00	0.00	30.00				

LOADS

Load	Value lb/ft²	Load	Value lb/ft

STABILITY CHECKS

Sliding Safety Coefficient	2.43	Base normal stress (left)	1612.11lb/ft²
Overturning Safety Coefficient	4.54	Base normal stress (right)	1425.93lb/ft²
Overall Stability Safety Coefficient	1.30	Max. allowable stress	2992.93lb/ft²

Maccaferri INC. is not responsible for the reliability of the geotechnical parameters assumed, or the improper use of the software. The program takes into account the physical characteristics of materials as manufacturated by the Maccaferri group; its results will not be realistic if a different material is used.

TENCATE

Mirafi

Drainage

Mirafi® 140NL

Mirafi® 140NL is a nonwoven geotextile composed of polypropylene fibers, which are formed into a network such that the fibers retain their relative position. Mirafi® 140NL is inert to biological degradation and resists naturally encountered chemicals, alkalis, and acids.

Mechanical Properties	Test Method	Unit	Minimum Average Roll Value	
			MD	CD
Grab Tensile Strength	ASTM D 4632	N (lbs)	401 (90)	401(90)
Grab Tensile Elongation	ASTM D 4632	%	50	50
Trapezoid Tear Strength	ASTM D 4533	N (lbs)	178 (40)	178 (40)
CBR Puncture Strength	ASTM D 6241	N (lbs)	1113 (250)	
Apparent Opening Size (AOS)[1]	ASTM D 4751	mm (U.S. Sieve)	0.25 (60)	
Permittivity	ASTM D 4491	sec^{-1}	2.0	
Flow Rate	ASTM D 4491	$l/min/m^2$ ($gal/min/ft^2$)	5907 (145)	
UV Resistance (at 500 hours)	ASTM D 4355	% strength retained	70	

[1] ASTM D 4751: AOS is a Maximum Opening Diameter Value

Physical Properties	Test Method	Unit	Typical Value	
Weight	ASTM D 5261	g/m^2 (oz/yd^2)	136 (4.0)	
Thickness	ASTM D 5199	mm (mils)	0.9 (35)	
Roll Dimensions (width x length)	--	m (ft)	3.8 x 110 (12.5 x 360)	4.5 x 110 (15 x 360)
Roll Area	--	m^2 (yd^2)	418 (500)	502 (600)
Estimated Roll Weight	--	kg (lb)	60 (133)	70 (160)

Disclaimer: TenCate assumes no liability for the accuracy or completeness of this information or for the ultimate use by the purchaser. TenCate disclaims any and all express, implied, or statutory standards, warranties or guarantees, including without limitation any implied warranty as to merchantability or fitness for a particular purpose or arising from a course of dealing or usage of trade as to any equipment, materials, or information furnished herewith. This document should not be construed as engineering advice.

Made in USA

FGS000360
ETQR32

TENCATE
materials that make a difference

Pollutant Loading Analysis

Calculation Sheet

Client: **General Electric Company**

Project Location: **Milford, New Hampshire**

Project: **Fletcher's Paint Works and Storage Facility** **Project:** **B0020985.0002**

Subject: **Pollutant Loading Analysis**

Prepared by: **PDB/MR** **Date:** **November 21, 2012**

Checked By: **PDB** **Date:** **November 21, 2012**

Reviewed By: **JEM** **Date:** **November 21, 2012**

OBJECTIVE:

Estimate pre- and post-development stormwater pollutant loading to determine if the proposed project meets the substantive requirements of the New Hampshire Surface Water Quality regulations (Env-Wq 1700). Size and evaluate proposed stormwater BMP (Best Management Practice) design in accordance with the substantive requirements of New Hampshire Alteration of Terrain Program administrative rules (Env-Wq 1500).

REFERENCES:

1. Trimble Navigation Limited. Terramodel. Vers. 10.52. Computer Software. 2007.
2. New Hampshire Department of Environmental Services (NHDES). Guidance for Estimating Pre- and Post-Development Stormwater Pollutant Loads, Revised May 3, 2010.
3. New Hampshire Department of Environmental Services (NHDES). Simple Method Pollutant Loading Spreadsheet Model, May 10, 2010.
4. National Oceanic and Atmospheric Association. New Hampshire Worksheet for Monthly Station Normals of Temperature, Precipitation and Heating and Cooling Degree Days 1971-2000.
5. New Hampshire Department of Environmental Services (NHDES). New Hampshire Stormwater Manual, December 2008.
6. New Hampshire Code of Administrative Rules, Env – Wq 1700 Surface Water Quality Regulations.
7. New Hampshire Code of Administrative Rules, Env – Wq 1500 Alteration of Terrain.
8. Remedial Design for Operable Unit 1 Off-Site Disposal Remedy, Design Drawings, ARCADIS, November, 2012.

ASSUMPTIONS:

1. The average annual rainfall for Hillsborough County, New Hampshire is 47.04 inches as provided by Reference 4.

Calculation Sheet

2. Pre- and post-development watershed limits and land use areas were determined from New Hampshire Department of Transportation aerial photography (2010), site topographic survey, using Reference 1. The watershed limits, watershed subareas, and land use areas are shown on the attached pre- and post-development watershed plan figures (Attachment 1).

3. Pre-and post- development stormwater pollutant loadings were calculated using the NHDES Simple Method spreadsheet (Reference 3).

4. For the pollutant loading calculations, it was assumed that application of fertilizer would not be used for open space land uses as part of future maintenance activities for the post-development condition.

5. The proposed BMP for the site, a stormwater bioretention area, was designed in accordance with the Filtration Practice Design Criteria as provided in Reference 4. The design details for the bioretention area can be found on Drawing G-27 in Attachment 3.

CALCULATIONS:

1. Stormwater Pollutant Loading Calculations

As shown on Figures 1 and 2 in Attachment 1, the pre- and post development watershed areas for the site were divided into three subareas that contribute runoff to the Souhegan River at distinct outlets that were defined as Points of Analysis (PoA) 1 to 3. The proposed land uses for the site will largely remain the same as the pre-development condition with the exception of the addition of a 0.20 acre paved parking area located on Keyes Park Access Road. Pollutant loading calculations were analyzed for both pre- and post development conditions and it was determined that the water quality standard for Total Nitrogen (TN) would not be met without the addition of a BMP. Based on the results from this analysis and a review of the site constraints and BMP removal efficiencies, a bioretention area was selected for the site (See 2 below for the BMP design).

The following table summarizes the results of the pollutant loading calculations for the pre- and post-development conditions with and without the specified BMP. The complete input and output from the NHDES Simple Method spreadsheet is included in Attachment 2.

Table 1 –Pre and Post Development Pollutant Loading

	TSS (LBS/YR)	TP (LBS/YR)	TN (LBS/YR)
PRE DEVELOPMENT	434.6	1.4	4.5
POST DEVELOPMENT (NO BMP)	302.0	1.1	7.9
POST DEVELOPMENT (WITH BMP)	137.3	0.6	4.0
% DIFFERENCE FROM PRE DEVELOPMENT LOADS	-68.4 %	-52.0%	-11.2%

Calculation Sheet

2. BMP Design

The bioretention area was designed in accordance with the bioretention system guidelines for filtration BMP practices provided in Reference 5. The details for the stormwater bioretention area design are shown on Drawing G-27 included in Attachment 3. A NHDES Filtration Practice Worksheet was completed for the bioretention area and is also included in Attachment 3.

CONCLUSIONS:

The pre-and post-development stormwater pollutant loading was evaluated and it was determined that the proposed project will meet the substantive requirements of the New Hampshire Surface Water Quality regulations (Env-Wq 1700). A bioretention system BMP was designed to infiltrate stormwater runoff from the proposed parking area on Keyes Park Access Road based on the design criteria provided by the New Hampshire Stormwater Manual and NHDES Alteration of Terrain (Env-Wq 1508.06) rules.

Attachment 1

Watershed and Land Use Figures

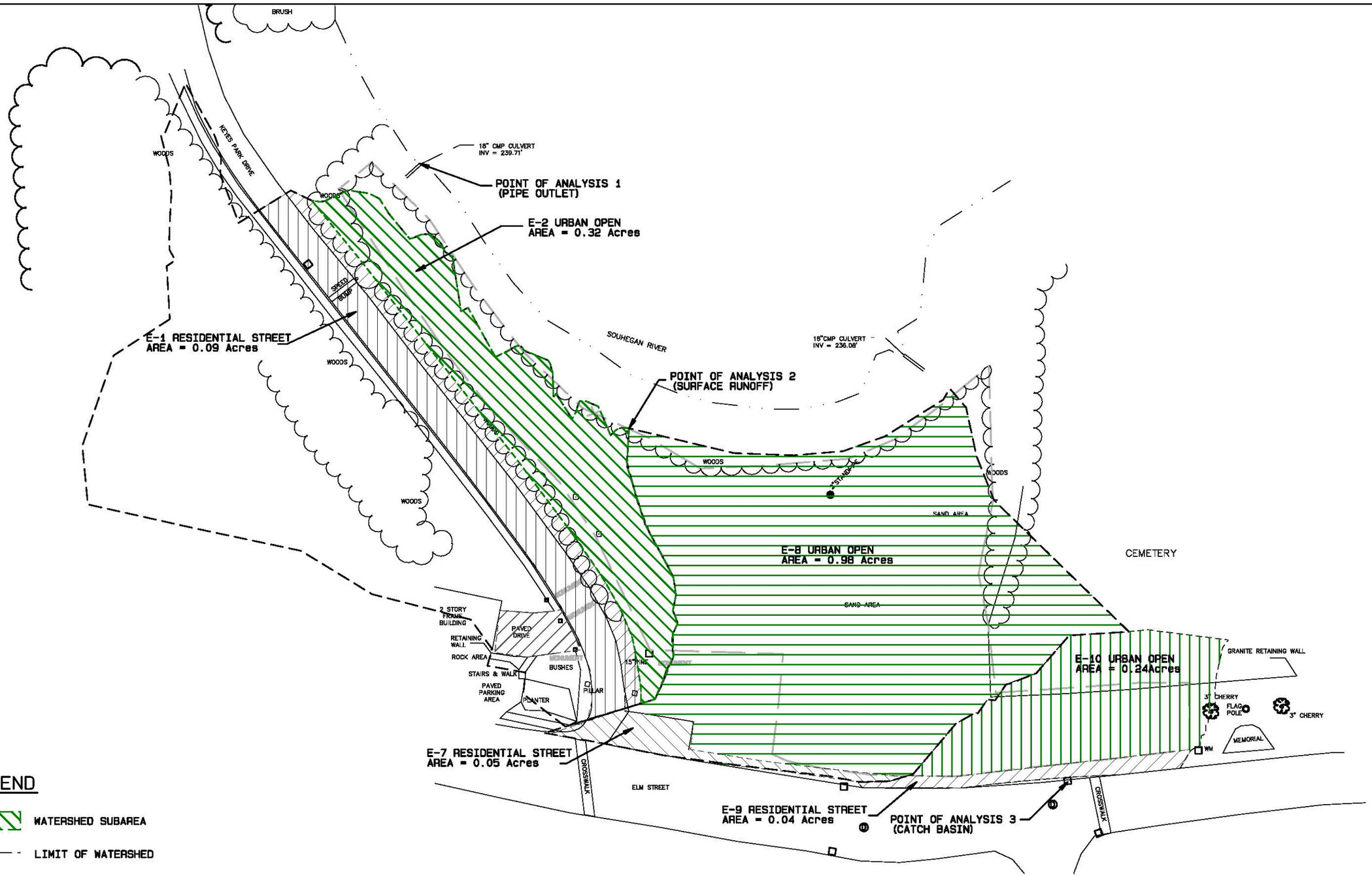

LEGEND

WATERSHED SUBAREA

LIMIT OF WATERSHED

SCALE IN FEET

0 60 120

ARCADIS

SHEET TITLE: PRE-DEVELOPMENT WATERSHED PLAN
PROJECT TITLE: FLETCHER'S PAINTWORKS AND STORAGE FACILITYY
PROJECT LOCATION: MILFORD, NEW HAMPSHIRE
PROJECT NO: B0020985.0002
DATE: 11/17/2012 BY: PDB

Figure

1

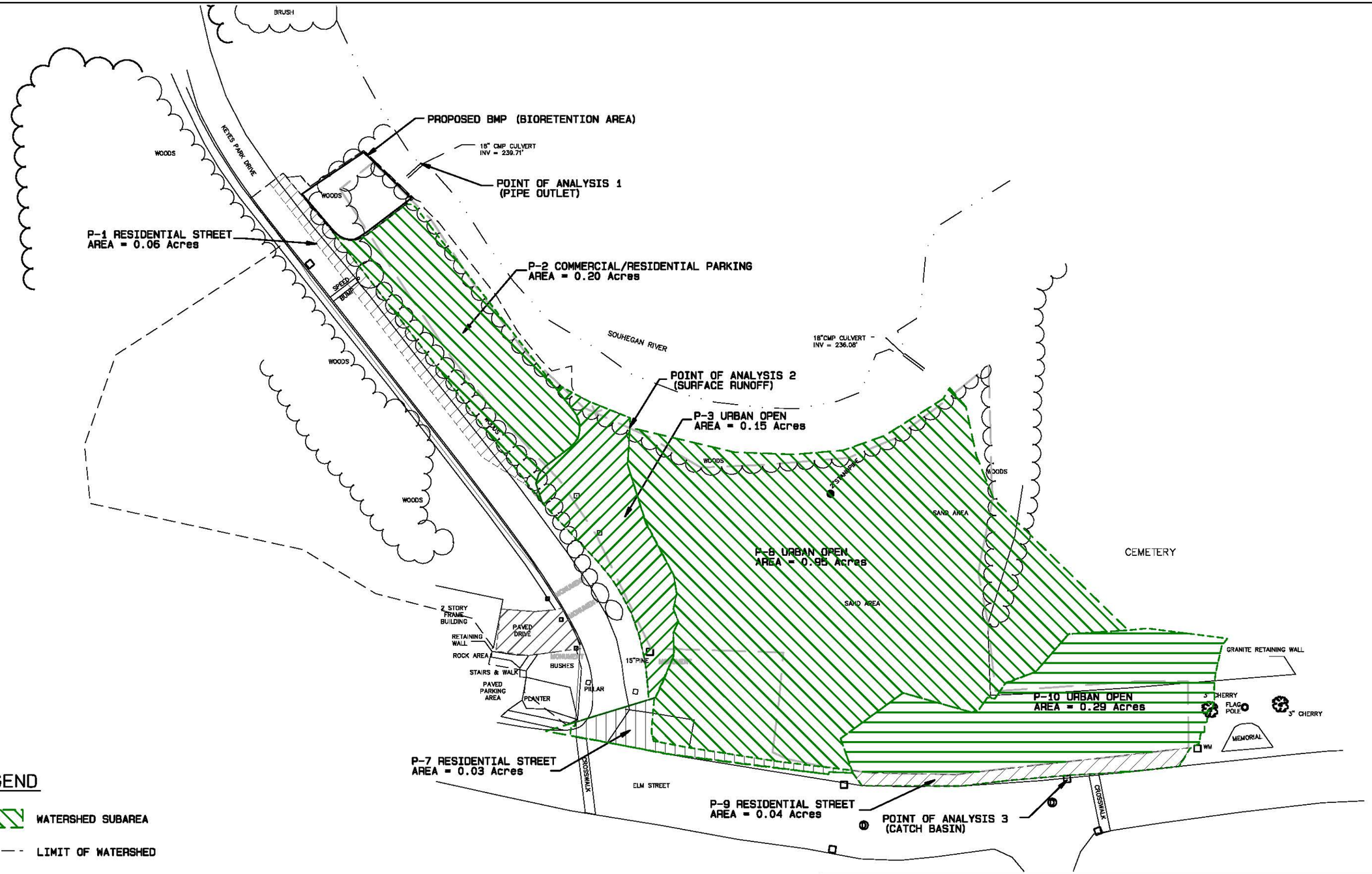

ARCADIS

SHEET TITLE: POST-DEVELOPMENT WATERSHED PLAN
PROJECT TITLE: FLETCHER'S PAINTWORKS AND STORAGE FACILITY
PROJECT LOCATION: MILFORD, NEW HAMPSHIRE
PROJECT NO: B0020985.0002
DATE: 11/17/2012 BY: PDB

Figure
2

Attachment 2

Pollutant Loading Analysis

OVERALL SUMMARY

Date (MM/DD/YYYY):	**11/17/2012**
Project Name:	**GE Fletcher Paint**
Town/City:	**Milford, New Hampshire**
Impacted Surface Waters:	**Souhegan River**
Applicant:	**General Electric Co.**
DES File #:	

TOTAL PRE -DEVELOPMENT (PRE-DEV) AREA (ACRES) =	**1.89**
TOTAL PRE-DEV EFFECTIVE IMPERVIOUS AREA (ACRES) =	**0.26**
TOTAL PRE-DEV PERCENT EFFECTIVE IMPERVIOUS (%) =	**13.7%**
TOTAL POST DEVELOPMENT (POST-DEV) AREA (ACRES) =	**1.81**
TOTAL POST-DEV EFFECTIVE IMPERVIOUS AREA (ACRES) =	**0.44**
TOTAL POST-DEV PERCENT EFFECTIVE IMPERVIOUS (%) =	**24.3%**
TOTAL POST-DEV AREA THAT IS FERTILIZED ANNUALLY (ACRES) =	**0.00**
TOTAL POST-DEV PERCENT OF AREA THAT IS FERTILIZED ANNUALLY (%) =	**0.0%**

	TSS (LBS/YR)	TP (LBS/YR)	TN (LBS/YR)
PRE DEVELOPMENT LOADS (NO BMPS)	**450.0**	**1.4**	**4.6**
PRE DEVELOPMENT LOADS (WITH BMPS)	**450.0**	**1.4**	**4.6**
PRE DEVELOPMENT LOAD REDUCTION DUE TO BMPS	**0.0**	**0.0**	**0.0**
PROPOSED PERCENT REDUCTION IN FERTILIZER APPLICATION RATE	**NA**	**0.0%**	**26.5%**
POST DEVELOPMENT LOADS (NO BMPS)	**312.7**	**1.1**	**8.1**
POST DEVELOPMENT LOADS (WITH BMPS)	**142.1**	**0.7**	**4.1**
POST DEVELOPMENT LOAD REDUCTION DUE TO BMPS	**170.6**	**0.5**	**4.0**
POST DEVELOPMENT - PRE DEVELOPMENT (SHOULD BE 0 OR NEGATIVE)	**-307.8**	**-0.7**	**-0.5**
% DIFFERENCE FROM PRE DEVELOMENT LOADS (SHOULD BE 0 OR NEGATIVE)	**-68.4%**	**-52.0%**	**-11.2%**
TOTAL REMOVAL EFFICIENCY NEEDED TO MEET PRE-DEVELOPMENT LOAD	**-43.9%**	**-22.3%**	**43.1%**
CURRENTLY PROPOSED REMOVAL EFFICIENCY	**54.5%**	**41.3%**	**49.5%**
REMAINING REMOVAL EFFICIENCY NECESSARY TO MEET PRE-DEVELOPMENT LOAD	**-98.4%**	**-63.6%**	**-6.4%**

Condition	Point of Analysis (PoA) Number	Sub-Area Number	Area Description	Land Use	BMP	Is the Impervious Area Disconnected in accordance with Chapter 6, Volume 1 of the NH Stormwater Manual or is the BMP an Infiltration BMP designed in accordance with Alteration of Terrain regulations (Env-Wq 1500)?	Pervious Undisturbed (i.e, forest, meadow, etc.)	Pervious Disturbed (i.e. lawn or other area that will be fertilized regularly)	Pervious Pavement that filters and infiltrates all stormwater (no underdrains)	Pervious Disturbed Other	Description of Pervious Disturbed Other	Pervious Total	Pervious Pavement that filters but does not infiltrate all stormwater (has underdrains)	Impervious Roof	Impervious Road	Impervious Parking and Drives	Impervious Sidewalks	Impervious Surface Water	Impervious Other	Description of Impervious Other	Impervious Total (prior to Disconnection or Infiltration BMP Credit)	Total Area	Composite % Impervious (without disconnection or Infiltration credit)	Composite % Impervious (with disconnection or Infiltration credit)
							Acres	Acres	Acres	Acres		Acres	Acres	Acres	Acres	Acres	Acres	Acres	Acres		Acres	Acres		
Pre-Development	1	E-1	West watershed consisting of the residential housing and the access road to Keyes Park	Residential Street		NO	0.09	0.00	0.00	0.00		0.09	0.00	0.00	0.17	0.00	0.00	0.00	0.00		0.17	0.26	65.38%	65.38%
Pre-Development	1	E-2	West watershed consisting of the residential housing and the access road to Keyes Park	Urban Open		NO	0.32	0.00	0.00	0.00		0.32	0.00	0.00	0.17	0.00	0.00	0.00	0.00		0.17	0.49	34.69%	34.69%
Pre-Development	2	E-7	Former Fletcher Paint Works property	Residential Street		NO	0.00	0.00	0.00	0.00		0.00	0.00	0.00	0.05	0.00	0.00	0.00	0.00		0.05	0.05	100.00%	100.00%
Pre-Development	2	E-8	Former Fletcher Paint Works property	Urban Open		NO	0.00	0.00	0.00	0.98	Remediation site with sand cap	0.98	0.00	0.00	0.00	0.00	0.00	0.00	0.00		0.00	0.98	0.00%	0.00%
Pre-Development	3	E-9	Former Fletcher Paint Works property	Residential Street		NO	0.00	0.00	0.00	0.00		0.00	0.00	0.00	0.04	0.00	0.00	0.00	0.00		0.04	0.04	100.00%	100.00%
Pre-Development	3	E-10	Former Fletcher Paint Works property	Urban Open		NO	0.00	0.00	0.00	0.24	Remediation site with sand cap	0.24	0.00	0.00	0.00	0.00	0.00	0.00	0.00		0.00	0.24	0.00%	0.00%

Condition	Point of Analysis (PoA) Number	Sub-Area Number	Area Description	Land Use	BMP	Is the Impervious Area Disconnected in accordance with Chapter 6, Volume 1 of the NH Stormwater Manual or is the BMP an Infiltration BMP designed in accordance with Alteration of Terrain regulations (Env-Wq 1500)?	Pervious Undisturbed (i.e, forest, meadow, etc.)	Pervious Disturbed (i.e. lawn or other area that will be fertilized annually)	Pervious Pavement that filters and infiltrates all stormwater (no underdrains)	Pervious Disturbed Other	Description of Pervious Disturbed Other	Pervious Total	Pervious Pavement that filters but does not infiltrate all stormwater (has underdrains)	Impervious Roof	Impervious Road	Impervious Parking and Drives	Impervious Sidewalks	Impervious Surface Water	Impervious Other	Description of Impervious Other	Impervious Total (Prior to Disconnection or Infiltration BMP Credit)	Total Area	Composite % Impervious (without disconnection or Infiltration credit)	Composite % Impervious (with disconnection or Infiltration credit)
							Acres	Acres	Acres	Acres		Acres	Acres	Acres	Acres	Acres	Acres	Acres	Acres		Acres	Acres		
Post-Development	1	P-1	West watershed consisting of the residential housing and the access road to Keyes Park	Residential Street	Bioretention Area	NO	0.00	0.00	0.00	0.00		0.00	0.00	0.00	0.06	0.00	0.00	0.00	0.00		0.06	0.06	100.00%	100.00%
Post-Development	1	P-2	West watershed consisting of the residential housing and the access road to Keyes Park	Commercial/Res Parking	Bioretention Area	NO	0.00	0.00	0.00	0.00		0.00	0.00	0.00	0.00	0.31	0.00	0.00	0.00		0.31	0.31	100.00%	100.00%
Post-Development	1	P-3	West watershed consisting of the residential housing and the access road to Keyes Park	Urban Open	Bioretention Area	NO	0.00	0.00	0.00	0.10	Remediation site cover with sand cap	0.10	0.00	0.00	0.26	0.00	0.05	0.00	0.00		0.31	0.41	75.61%	75.61%
Post-Development	2	P-7	Former Fletcher Paint Works property	Residential Street	None	NO	0.00	0.00	0.00	0.00		0.00	0.00	0.00	0.03	0.00	0.00	0.00	0.00		0.03	0.03	100.00%	100.00%
Post-Development	2	P-8	Former Fletcher Paint Works property	Urban Open	None	NO	0.00	0.00	0.00	0.95	Remediation site cover with sand cap	0.95	0.00	0.00	0.00	0.00	0.00	0.00	0.00		0.00	0.95	0.00%	0.00%
Post-Development	3	P-9	Former Fletcher Paint Works property	Residential Street	None	NO	0.00	0.00	0.00	0.00		0.00	0.00	0.00	0.04	0.00	0.00	0.00	0.00		0.04	0.04	100.00%	100.00%
Post-Development	3	P-10	Former Fletcher Paint Works property	Urban Open	None	NO	0.00	0.00	0.00	0.29	Remediation site cover with sand cap	0.29	0.00	0.00	0.00	0.00	0.00	0.00	0.00		0.00	0.29	0.00%	0.00%

Date (MM/DD/YYYY):	**11/17/2012**
Project Name:	**GE Fletcher Paint**
Town/City:	**Milford, New Hampshire**
Impacted Surface Waters:	**Souhegan River**
Applicant:	**General Electric Co.**
DES File #:	

Average Annual Precipitation P	**47.04**	**inches**
Fraction of Annual Runoff events that produce runoff	**0.90**	**(usually 0.9)**

ONLY INPUT VALUES IN BLUE SHADED CELLS

Credit for Using Low Nutrient Fertilizer: If there are managed turf areas under post development conditions that are to be fertilized annually, reductions in post development nutrient (TP and TN) loadings can be realized by providing enforceable documents (i.e., deed restrictions) requiring land owners to use low nutrient fertilizer. To get low nutrient fertilizer pollutant reductions input the proposed reduced fertilizer application rates for post development development for TP and TN in the table below. Low nutrient fertilizers must have application rates less than the standard fertilizer application rate shown in the table. Then input the percent of each land use in each post development sub-area that is managed turf that is fertilized annually.

	Fertilizer Reduction Calculator	
	TP	**TN**
STANDARD FERTILIZER APPLICATION RATE (lbs/acre/year)	15.0	150.0
PROPOSED REDUCED FERTILIZER APPLICATION RATES FOR POST-DEVELOPMENT (lbs/acre/year)	**15.0**	**44.0**
INITIAL PERCENT REDUCTION	0.0%	70.7%
PERCENT OF CITIZENS THAT WILL COMPLY WITH REDUCED APPLICATION RATES	50%	50%
PERCENT OF APPLIED FERTILIZER THAT IS LOST TO RUNOFF OR PERCOLATION	75%	75%
FINAL PERCENT FERTILIZER REDUCTION WITH COMPLIANCE AND RUNOFF RATES APPLIED (%FR)	**0.0%**	**26.5%**
MINIMUM ASSUMED EMC = EMC_{MIN} (mg/L)	0.11	1.74

Used to reduce EMCs for Post TP and Post TN for each land use in each Sub Area depending on perce of area that is managed turf that is fertilized annually

PRE-DEVELOPMENT CONDITIONS

	Area	**Impervious Area**
Total Area (All Sub-Areas) (acres)	**1.89**	**0.26**

Insert information for 1st sub-area below

Sub_Area_ID	**E-1 to E-2**	
Point of Analysis (PoA) Number	**1**	
Total Area for Sub-Area (acres)	**0.58**	**0.17**

Land Use	**Area** (acres)	**Ia** (% Impervious)
From HWG		
Residential Roof	0.00	0.00%
Commercial Roof	0.00	0.00%
Commercial/Res Parking	0.00	0.00%
Residential Street	0.26	65.00%
Urban Highway	0.00	0.00%
Lawns	0.00	0.00%
Driveway	0.00	0.00%
Residential (general)	0.00	0.00%
Commercial (general)	0.00	0.00%
Industrial (general)	0.00	0.00%
From CDM		
Agriculture and Pasture	0.00	0.00%
Commercial	0.00	0.00%
Forest/Rural Open	0.00	0.00%
Highway	0.00	0.00%
Industrial	0.00	0.00%
Medium Density Residential	0.00	0.00%
Urban Open	0.32	0.00%
Water/Wetland	0.00	0.00%

Insert information for 2nd sub-area below

Sub_Area_ID	**E-7 to E-8**	
Point of Analysis (PoA) Number	**2**	
Total Area for Sub-Area (acres)	**1.03**	**0.05**

Land Use	**Area** (acres)	**Ia** (% Impervious)
From HWG		
Residential Roof	0.00	0.00%
Commercial Roof	0.00	0.00%
Commercial/Res Parking	0.00	0.00%
Residential Street	0.05	100.00%
Urban Highway	0.00	0.00%
Lawns	0.00	0.00%
Driveway	0.00	0.00%
Residential (general)	0.00	0.00%
Commercial (general)	0.00	0.00%
Industrial (general)	0.00	0.00%
From CDM		
Agriculture and Pasture	0.00	0.00%
Commercial	0.00	0.00%
Forest/Rural Open	0.00	0.00%
Highway	0.00	0.00%
Industrial	0.00	0.00%
Medium Density Residential	0.00	0.00%
Urban Open	0.98	0.00%
Water/Wetland	0.00	0.00%

Insert information for 3rd sub-area below

Sub_Area_ID	**E-9 to E-10**	
Point of Analysis (PoA) Number	**3**	
Total Area for Sub-Area (acres)	**0.28**	**0.04**

Land Use	**Area** (acres)	**Ia** (% Impervious)
From HWG		
Residential Roof	0.00	0.00%
Commercial Roof	0.00	0.00%
Commercial/Res Parking	0.00	0.00%
Residential Street	0.04	100.00%
Urban Highway	0.00	0.00%
Lawns	0.00	0.00%
Driveway	0.00	0.00%
Residential (general)	0.00	0.00%
Commercial (general)	0.00	0.00%
Industrial (general)	0.00	0.00%
From CDM		
Agriculture and Pasture	0.00	0.00%
Commercial	0.00	0.00%
Forest/Rural Open	0.00	0.00%
Highway	0.00	0.00%
Industrial	0.00	0.00%
Medium Density Residential	0.00	0.00%
Urban Open	0.24	0.00%
Water/Wetland	0.00	0.00%

Insert information for 4th sub-area below

Sub_Area_ID	**4-PRE**	
Point of Analysis (PoA) Number		
Total Area for Sub-Area (acres)	**0.00**	**0.00**

POST-DEVELOPMENT CONDITIONS

	Area	**Impervious Area**	**Area Fertilized Annually**
Total Area (All Sub-Areas) (acres)	**1.81**	**0.44**	**0.00**

Sub_Area_ID	**P-1 to P-3**		
Point of Analysis (PoA) Number	**1**		
Total Area in Sub-Area (acres)	**0.47**	**0.37**	**0.00**

Land Use	**Total Area for each Land Use** (acres)	**Ia** (% Impervious)	**Percent of Area that is managed turf (i.e., fertilized annually)** %	**Post-TP EMC** mg/L	**Post-TN EMC** mg/L
From HWG					
Residential Roof	0.00	0.00%	0.0%	0.11	1.50
Commercial Roof	0.00	0.00%	0.0%	0.14	2.10
Commercial/Res Parking	0.31	100.00%	0.0%	0.15	1.90
Residential Street	0.06	100.00%	0.0%	0.55	1.40
Urban Highway	0.00	0.00%	0.0%	0.32	3.00
Lawns	0.00	0.00%	100.0%	2.10	7.15
Driveway	0.00	0.00%	0.0%	0.56	2.10
Residential (general)	0.00	0.00%	0.0%	0.40	2.20
Commercial (general)	0.00	0.00%	0.0%	0.20	2.00
Industrial (general)	0.00	0.00%	0.0%	0.40	2.50
From CDM					
Agriculture and Pasture	0.00	0.00%	0.0%	0.37	5.98
Commercial	0.00	0.00%	0.0%	0.33	2.97
Forest/Rural Open	0.00	0.00%	0.0%	0.11	1.74
Highway	0.00	0.00%	0.0%	0.43	2.65
Industrial	0.00	0.00%	0.0%	0.32	3.97
Medium Density Residential	0.00	0.00%	0.0%	0.52	5.15
Urban Open	0.10	0.00%	0.0%	0.11	1.74
Water/Wetland	0.00	0.00%	0.0%	0.08	1.38

Sub_Area_ID	**P-7 to P-8**		
Point of Analysis (PoA) Number	**2**		
Total Area in Sub-Area (acres)	**1.01**	**0.03**	**0.00**

Land Use	**Area** (acres)	**Ia** (% Impervious)	**Percent of Area that is managed turf (i.e., fertilized annually)** %	**Post-TP EMC** mg/L	**Post-TN EMC** mg/L
From HWG					
Residential Roof	0.00	0.00%	0.0%	0.11	1.50
Commercial Roof	0.00	0.00%	0.0%	0.14	2.10
Commercial/Res Parking	0.00	0.00%	0.0%	0.15	1.90
Residential Street	0.03	100.00%	0.0%	0.55	1.40
Urban Highway	0.00	0.00%	0.0%	0.32	3.00
Lawns	0.00	0.00%	0.0%	2.10	9.10
Driveway	0.00	0.00%	0.0%	0.56	2.10
Residential (general)	0.00	0.00%	0.0%	0.40	2.20
Commercial (general)	0.00	0.00%	0.0%	0.20	2.00
Industrial (general)	0.00	0.00%	0.0%	0.40	2.50
From CDM					
Agriculture and Pasture	0.00	0.00%	0.0%	0.37	5.98
Commercial	0.00	0.00%	0.0%	0.33	2.97
Forest/Rural Open	0.00	0.00%	0.0%	0.11	1.74
Highway	0.00	0.00%	0.0%	0.43	2.65
Industrial	0.00	0.00%	0.0%	0.32	3.97
Medium Density Residential	0.00	0.00%	0.0%	0.52	5.15
Urban Open	0.98	0.00%	0.0%	0.11	1.74
Water/Wetland	0.00	0.00%	0.0%	0.08	1.38

Sub_Area_ID	**P-9 to P-10**		
Point of Analysis (PoA) Number	**3**		
Total Area in Sub-Area (acres)	**0.33**	**0.04**	**0.00**

Land Use	**Area** (acres)	**Ia** (% Impervious)	**Percent of Area that is managed turf (i.e., fertilized annually)** %	**Post-TP EMC** mg/L	**Post-TN EMC** mg/L
From HWG					
Residential Roof	0.00	0.00%	0.0%	0.11	1.50
Commercial Roof	0.00	0.00%	0.0%	0.14	2.10
Commercial/Res Parking	0.00	0.00%	0.0%	0.15	1.90
Residential Street	0.04	100.00%	0.0%	0.55	1.40
Urban Highway	0.00	0.00%	0.0%	0.32	3.00
Lawns	0.00	0.00%	0.0%	2.10	9.10
Driveway	0.00	0.00%	0.0%	0.56	2.10
Residential (general)	0.00	0.00%	0.0%	0.40	2.20
Commercial (general)	0.00	0.00%	0.0%	0.20	2.00
Industrial (general)	0.00	0.00%	0.0%	0.40	2.50
From CDM					
Agriculture and Pasture	0.00	0.00%	0.0%	0.37	5.98
Commercial	0.00	0.00%	0.0%	0.33	2.97
Forest/Rural Open	0.00	0.00%	0.0%	0.11	1.74
Highway	0.00	0.00%	0.0%	0.43	2.65
Industrial	0.00	0.00%	0.0%	0.32	3.97
Medium Density Residential	0.00	0.00%	0.0%	0.52	5.15
Urban Open	0.29	0.00%	0.0%	0.11	1.74
Water/Wetland	0.00	0.00%	0.0%	0.08	1.38

Sub_Area_ID	**4-POST**		
Point of Analysis (PoA) Number			
Total Area in Sub-Area (acres)	**0.00**	**0.00**	**0.00**

Date (MM/DD/YYYY):	11/17/2012
Project Name:	GE Fletcher Paint
Town/City:	Milford, New Hampshire
Impacted Surface Waters:	Souhegan River
Applicant:	General Electric Co.
DES File #:	

TOTAL POST DEVELOPMENT - PRE DEVELOPMENT (SHOULD BE 0 OR NEGATIVE) (lbs/yr)	-307.8
% DIFFERENCE FROM PRE DEVELOMENT LOADS (SHOULD BE 0 OR NEGATIVE)	-68.4%
TOTAL REMOVAL EFFICIENCY NEEDED TO MEET PRE-DEVELOPMENT LOAD	-43.9%
CURRENTLY PROPOSED REMOVAL EFFICIENCY	54.5%
REMAINING REMOVAL EFFICIENCY NECESSARY TO MEET PRE-DEVELOPMENT LOAD	-98.4%

PRE-DEVELOPMENT

PRE OR POST - DEV	SUB-AREA	POINT OF ANALYSIS NUMBER	AREA (acres)	Effective Impervious Area (acres)	Area Fertilized Annually (acres)	POLLUTANT	PERCENT REDUCTION IN FERTILIZER APPLICATION RATE	BMPS	LOAD (NO BMPS) (lbs/yr)	LOAD (WITH BMPS) (lbs/yr)	LOAD REDUCTION DUE TO BMPS (lbs/yr)	PERCENT REMOVAL
PRE	E-1 to E-2	1	0.58	0.17	NA	TSS	NA		279.5	279.5	0.0	0.0%
PRE	E-7 to E-8	2	1.03	0.05	NA	TSS	NA		102.1	102.1	0.0	0.0%
PRE	E-9 to E-10	3	0.28	0.04	NA	TSS	NA		68.4	68.4	0.0	0.0%
PRE	4-PRE		0.00	0.00	NA	TSS	NA		0.0	0.0	0.0	0.0%
PRE	5-PRE		0.00	0.00	NA	TSS	NA		0.0	0.0	0.0	0.0%
PRE	6-PRE		0.00	0.00	NA	TSS	NA		0.0	0.0	0.0	0.0%
PRE	7-PRE		0.00	0.00	NA	TSS	NA		0.0	0.0	0.0	0.0%
PRE	8-PRE		0.00	0.00	NA	TSS	NA		0.0	0.0	0.0	0.0%
PRE	9-PRE		0.00	0.00	NA	TSS	NA		0.0	0.0	0.0	0.0%
PRE	10-PRE		0.00	0.00	NA	TSS	NA		0.0	0.0	0.0	0.0%
PRE	11-PRE		0.00	0.00	NA	TSS	NA		0.0	0.0	0.0	0.0%
PRE	12-PRE		0.00	0.00	NA	TSS	NA		0.0	0.0	0.0	0.0%
PRE	13-PRE		0.00	0.00	NA	TSS	NA		0.0	0.0	0.0	0.0%
PRE	14-PRE		0.00	0.00	NA	TSS	NA		0.0	0.0	0.0	0.0%
PRE	15-PRE		0.00	0.00	NA	TSS	NA		0.0	0.0	0.0	0.0%
PRE	16-PRE		0.00	0.00	NA	TSS	NA		0.0	0.0	0.0	0.0%
PRE	17-PRE		0.00	0.00	NA	TSS	NA		0.0	0.0	0.0	0.0%
PRE	18-PRE		0.00	0.00	NA	TSS	NA		0.0	0.0	0.0	0.0%
PRE	19-PRE		0.00	0.00	NA	TSS	NA		0.0	0.0	0.0	0.0%
PRE	20-PRE		0.00	0.00	NA	TSS	NA		0.0	0.0	0.0	0.0%
PRE	21-PRE		0.00	0.00	NA	TSS	NA		0.0	0.0	0.0	0.0%
PRE	22-PRE		0.00	0.00	NA	TSS	NA		0.0	0.0	0.0	0.0%
PRE	23-PRE		0.00	0.00	NA	TSS	NA		0.0	0.0	0.0	0.0%
PRE	24-PRE		0.00	0.00	NA	TSS	NA		0.0	0.0	0.0	0.0%
PRE	25-PRE		0.00	0.00	NA	TSS	NA		0.0	0.0	0.0	0.0%
		TOTAL	1.89	0.26				TOTAL	450.0	450.0	0.0	0.0%

Date (MM/DD/YYYY):	**11/17/2012**
Project Name:	**GE Fletcher Paint**
Town/City:	**Milford, New Hampshire**
Impacted Surface Waters:	**Souhegan River**
Applicant:	**General Electric Co.**
DES File #:	

TOTAL POST DEVELOPMENT - PRE DEVELOPMENT (SHOULD BE 0 OR NEGATIVE) (lbs/yr)	**-307.8**
% DIFFERENCE FROM PRE DEVELOMENT LOADS (SHOULD BE 0 OR NEGATIVE)	**-68.4%**
TOTAL REMOVAL EFFICIENCY NEEDED TO MEET PRE-DEVELOPMENT LOAD	**-43.9%**
CURRENTLY PROPOSED REMOVAL EFFICIENCY	**54.5%**
REMAINING REMOVAL EFFICIENCY NECESSARY TO MEET PRE-DEVELOPMENT LOAD	**-98.4%**

POST-DEVELOPMENT

PRE OR POST - DEV	SUB-AREA	POINT OF ANALYSIS NUMBER	AREA (acres)	Effective Impervious Area (acres)	Area Fertilized Annually (acres)	POLLUTANT	PERCENT REDUCTION IN FERTILIZER APPLICATION RATE	BMPS	LOAD (NO BMPS) (lbs/yr)	LOAD (WITH BMPS) (lbs/yr)	LOAD REDUCTION DUE TO BMPS (lbs/yr)	PERCENT REMOVAL
POST	P-1 to P-3	1	0.47	0.37	0.00	TSS	NA	Bioretention System - North Side of Parking Area	172.3	1.7	170.6	99.0%
POST	P-7 to P-8	2	1.01	0.03	0.00	TSS	NA		70.8	70.8	0.0	0.0%
POST	P-9 to P-10	3	0.33	0.04	0.00	TSS	NA		69.6	69.6	0.0	0.0%
POST	4-POST		0.00	0.00	0.00	TSS	NA		0.0	0.0	0.0	0.0%
POST	5-POST		0.00	0.00	0.00	TSS	NA		0.0	0.0	0.0	0.0%
POST	6-POST		0.00	0.00	0.00	TSS	NA		0.0	0.0	0.0	0.0%
POST	7-POST		0.00	0.00	0.00	TSS	NA		0.0	0.0	0.0	0.0%
POST	8-POST		0.00	0.00	0.00	TSS	NA		0.0	0.0	0.0	0.0%
POST	9-POST		0.00	0.00	0.00	TSS	NA		0.0	0.0	0.0	0.0%
POST	10-POST		0.00	0.00	0.00	TSS	NA		0.0	0.0	0.0	0.0%
POST	11-POST		0.00	0.00	0.00	TSS	NA		0.0	0.0	0.0	0.0%
POST	12-POST		0.00	0.00	0.00	TSS	NA		0.0	0.0	0.0	0.0%
POST	13-POST		0.00	0.00	0.00	TSS	NA		0.0	0.0	0.0	0.0%
POST	14-POST		0.00	0.00	0.00	TSS	NA		0.0	0.0	0.0	0.0%
POST	15-POST		0.00	0.00	0.00	TSS	NA		0.0	0.0	0.0	0.0%
POST	16-POST		0.00	0.00	0.00	TSS	NA		0.0	0.0	0.0	0.0%
POST	17-POST		0.00	0.00	0.00	TSS	NA		0.0	0.0	0.0	0.0%
POST	18-POST		0.00	0.00	0.00	TSS	NA		0.0	0.0	0.0	0.0%
POST	19-POST		0.00	0.00	0.00	TSS	NA		0.0	0.0	0.0	0.0%
POST	20-POST		0.00	0.00	0.00	TSS	NA		0.0	0.0	0.0	0.0%
POST	21-POST		0.00	0.00	0.00	TSS	NA		0.0	0.0	0.0	0.0%
POST	22-POST		0.00	0.00	0.00	TSS	NA		0.0	0.0	0.0	0.0%
POST	23-POST		0.00	0.00	0.00	TSS	NA		0.0	0.0	0.0	0.0%
POST	24-POST		0.00	0.00	0.00	TSS	NA		0.0	0.0	0.0	0.0%
POST	25-POST		0.00	0.00	0.00	TSS	NA		0.0	0.0	0.0	0.0%
		TOTAL	1.81	0.44	0.00			TOTAL	312.7	142.1	170.6	54.5%

Date (MM/DD/YYYY):	11/17/2012
Project Name:	GE Fletcher Paint
Town/City:	Milford, New Hampshire
Impacted Surface Waters:	Souhegan River
Applicant:	General Electric Co.
DES File #:	

TOTAL POST DEVELOPMENT - PRE DEVELOPMENT (SHOULD BE 0 OR NEGATIVE) (lbs/yr)	-0.7
% DIFFERENCE FROM PRE DEVELOMENT LOADS (SHOULD BE 0 OR NEGATIVE)	-52.0%
TOTAL REMOVAL EFFICIENCY NEEDED TO MEET PRE-DEVELOPMENT LOAD	-22.3%
CURRENTLY PROPOSED REMOVAL EFFICIENCY	41.3%
REMAINING REMOVAL EFFICIENCY NECESSARY TO MEET PRE-DEVELOPMENT LOAD	-63.6%

PRE-DEVELOPMENT

PRE OR POST - DEV	SUB-AREA	POINT OF ANALYSIS NUMBER	AREA (acres)	Effective Impervious Area (acres)	Area Fertilized Annually (acres)	POLLUTANT	PERCENT REDUCTION IN FERTILIZER APPLICATION RATE	BMPS	LOAD (NO BMPS) (lbs/yr)	LOAD (WITH BMPS) (lbs/yr)	LOAD REDUCTION DUE TO BMPS (lbs/yr)	PERCENT REMOVAL
PRE	E-1 to E-2	1	0.58	0.17	NA	TP	NA		0.9	0.9	0.0	0.0%
PRE	E-7 to E-8	2	1.03	0.05	NA	TP	NA		0.3	0.3	0.0	0.0%
PRE	E-9 to E-10	3	0.28	0.04	NA	TP	NA		0.2	0.2	0.0	0.0%
PRE	4-PRE		0.00	0.00	NA	TP	NA		0.0	0.0	0.0	0.0%
PRE	5-PRE		0.00	0.00	NA	TP	NA		0.0	0.0	0.0	0.0%
PRE	6-PRE		0.00	0.00	NA	TP	NA		0.0	0.0	0.0	0.0%
PRE	7-PRE		0.00	0.00	NA	TP	NA		0.0	0.0	0.0	0.0%
PRE	8-PRE		0.00	0.00	NA	TP	NA		0.0	0.0	0.0	0.0%
PRE	9-PRE		0.00	0.00	NA	TP	NA		0.0	0.0	0.0	0.0%
PRE	10-PRE		0.00	0.00	NA	TP	NA		0.0	0.0	0.0	0.0%
PRE	11-PRE		0.00	0.00	NA	TP	NA		0.0	0.0	0.0	0.0%
PRE	12-PRE		0.00	0.00	NA	TP	NA		0.0	0.0	0.0	0.0%
PRE	13-PRE		0.00	0.00	NA	TP	NA		0.0	0.0	0.0	0.0%
PRE	14-PRE		0.00	0.00	NA	TP	NA		0.0	0.0	0.0	0.0%
PRE	15-PRE		0.00	0.00	NA	TP	NA		0.0	0.0	0.0	0.0%
PRE	16-PRE		0.00	0.00	NA	TP	NA		0.0	0.0	0.0	0.0%
PRE	17-PRE		0.00	0.00	NA	TP	NA		0.0	0.0	0.0	0.0%
PRE	18-PRE		0.00	0.00	NA	TP	NA		0.0	0.0	0.0	0.0%
PRE	19-PRE		0.00	0.00	NA	TP	NA		0.0	0.0	0.0	0.0%
PRE	20-PRE		0.00	0.00	NA	TP	NA		0.0	0.0	0.0	0.0%
PRE	21-PRE		0.00	0.00	NA	TP	NA		0.0	0.0	0.0	0.0%
PRE	22-PRE		0.00	0.00	NA	TP	NA		0.0	0.0	0.0	0.0%
PRE	23-PRE		0.00	0.00	NA	TP	NA		0.0	0.0	0.0	0.0%
PRE	24-PRE		0.00	0.00	NA	TP	NA		0.0	0.0	0.0	0.0%
PRE	25-PRE		0.00	0.00	NA	TP	NA		0.0	0.0	0.0	0.0%
		TOTAL	1.89	0.26				TOTAL	1.4	1.4	0.0	0.0%

Date (MM/DD/YYYY): 11/17/2012
Project Name: GE Fletcher Paint
Town/City: Milford, New Hampshire
Impacted Surface Waters: Souhegan River
Applicant: General Electric Co.
DES File #:

POST-DEVELOPMENT

PRE OR POST - DEV	SUB-AREA	POINT OF ANALYSIS NUMBER	AREA (acres)	Effective Impervious Area (acres)	Area Fertilized Annually (acres)	POLLUTANT	PERCENT REDUCTION IN FERTILIZER APPLICATION RATE	BMPS	LOAD (NO BMPS) (lbs/yr)	LOAD (WITH BMPS) (lbs/yr)	LOAD REDUCTION DUE TO BMPS (lbs/yr)	PERCENT REMOVAL
POST	P-1 to P-3	1	0.47	0.37	0.00	TP	0.0%	Bioretention System - North Side of Parking Area	0.7	0.3	0.5	65.0%
POST	P-7 to P-8	2	1.01	0.03	0.00	TP	0.0%		0.2	0.2	0.0	0.0%
POST	P-9 to P-10	3	0.33	0.04	0.00	TP	0.0%		0.2	0.2	0.0	0.0%
POST	4-POST		0.00	0.00	0.00	TP	0.0%		0.0	0.0	0.0	0.0%
POST	5-POST		0.00	0.00	0.00	TP	0.0%		0.0	0.0	0.0	0.0%
POST	6-POST		0.00	0.00	0.00	TP	0.0%		0.0	0.0	0.0	0.0%
POST	7-POST		0.00	0.00	0.00	TP	0.0%		0.0	0.0	0.0	0.0%
POST	8-POST		0.00	0.00	0.00	TP	0.0%		0.0	0.0	0.0	0.0%
POST	9-POST		0.00	0.00	0.00	TP	0.0%		0.0	0.0	0.0	0.0%
POST	10-POST		0.00	0.00	0.00	TP	0.0%		0.0	0.0	0.0	0.0%
POST	11-POST		0.00	0.00	0.00	TP	0.0%		0.0	0.0	0.0	0.0%
POST	12-POST		0.00	0.00	0.00	TP	0.0%		0.0	0.0	0.0	0.0%
POST	13-POST		0.00	0.00	0.00	TP	0.0%		0.0	0.0	0.0	0.0%
POST	14-POST		0.00	0.00	0.00	TP	0.0%		0.0	0.0	0.0	0.0%
POST	15-POST		0.00	0.00	0.00	TP	0.0%		0.0	0.0	0.0	0.0%
POST	16-POST		0.00	0.00	0.00	TP	0.0%		0.0	0.0	0.0	0.0%
POST	17-POST		0.00	0.00	0.00	TP	0.0%		0.0	0.0	0.0	0.0%
POST	18-POST		0.00	0.00	0.00	TP	0.0%		0.0	0.0	0.0	0.0%
POST	19-POST		0.00	0.00	0.00	TP	0.0%		0.0	0.0	0.0	0.0%
POST	20-POST		0.00	0.00	0.00	TP	0.0%		0.0	0.0	0.0	0.0%
POST	21-POST		0.00	0.00	0.00	TP	0.0%		0.0	0.0	0.0	0.0%
POST	22-POST		0.00	0.00	0.00	TP	0.0%		0.0	0.0	0.0	0.0%
POST	23-POST		0.00	0.00	0.00	TP	0.0%		0.0	0.0	0.0	0.0%
POST	24-POST		0.00	0.00	0.00	TP	0.0%		0.0	0.0	0.0	0.0%
POST	25-POST		0.00	0.00	0.00	TP	0.0%		0.0	0.0	0.0	0.0%
		TOTAL	1.81	0.44	0.00			TOTAL	1.1	0.7	0.5	41.3%

Date (MM/DD/YYYY):	11/17/2012
Project Name:	GE Fletcher Paint
Town/City:	Milford, New Hampshire
Impacted Surface Waters:	Souhegan River
Applicant:	General Electric Co.
DES File #:	

TOTAL POST DEVELOPMENT - PRE DEVELOPMENT (SHOULD BE 0 OR NEGATIVE) (lbs/yr)	-0.5
% DIFFERENCE FROM PRE DEVELOMENT LOADS (SHOULD BE 0 OR NEGATIVE)	-11.2%
TOTAL REMOVAL EFFICIENCY NEEDED TO MEET PRE-DEVELOPMENT LOAD	43.1%
CURRENTLY PROPOSED REMOVAL EFFICIENCY	49.5%
REMAINING REMOVAL EFFICIENCY NECESSARY TO MEET PRE-DEVELOPMENT LOAD	-6.4%

PRE-DEVELOPMENT

PRE OR POST - DEV	SUB-AREA	POINT OF ANALYSIS NUMBER	AREA (acres)	Effective Impervious Area (acres)	Area Fertilized Annually (acres)	POLLUTANT	PERCENT REDUCTION IN FERTILIZER APPLICATION RATE	BMPS	LOAD (NO BMPS) (lbs/yr)	LOAD (WITH BMPS) (lbs/yr)	LOAD REDUCTION DUE TO BMPS (lbs/yr)	PERCENT REMOVAL
PRE	E-1 to E-2	1	0.58	0.17	NA	TN	NA		2.5	2.5	0.0	0.0%
PRE	E-7 to E-8	2	1.03	0.05	NA	TN	NA		1.5	1.5	0.0	0.0%
PRE	E-9 to E-10	3	0.28	0.04	NA	TN	NA		0.7	0.7	0.0	0.0%
PRE	4-PRE		0.00	0.00	NA	TN	NA		0.0	0.0	0.0	0.0%
PRE	5-PRE		0.00	0.00	NA	TN	NA		0.0	0.0	0.0	0.0%
PRE	6-PRE		0.00	0.00	NA	TN	NA		0.0	0.0	0.0	0.0%
PRE	7-PRE		0.00	0.00	NA	TN	NA		0.0	0.0	0.0	0.0%
PRE	8-PRE		0.00	0.00	NA	TN	NA		0.0	0.0	0.0	0.0%
PRE	9-PRE		0.00	0.00	NA	TN	NA		0.0	0.0	0.0	0.0%
PRE	10-PRE		0.00	0.00	NA	TN	NA		0.0	0.0	0.0	0.0%
PRE	11-PRE		0.00	0.00	NA	TN	NA		0.0	0.0	0.0	0.0%
PRE	12-PRE		0.00	0.00	NA	TN	NA		0.0	0.0	0.0	0.0%
PRE	13-PRE		0.00	0.00	NA	TN	NA		0.0	0.0	0.0	0.0%
PRE	14-PRE		0.00	0.00	NA	TN	NA		0.0	0.0	0.0	0.0%
PRE	15-PRE		0.00	0.00	NA	TN	NA		0.0	0.0	0.0	0.0%
PRE	16-PRE		0.00	0.00	NA	TN	NA		0.0	0.0	0.0	0.0%
PRE	17-PRE		0.00	0.00	NA	TN	NA		0.0	0.0	0.0	0.0%
PRE	18-PRE		0.00	0.00	NA	TN	NA		0.0	0.0	0.0	0.0%
PRE	19-PRE		0.00	0.00	NA	TN	NA		0.0	0.0	0.0	0.0%
PRE	20-PRE		0.00	0.00	NA	TN	NA		0.0	0.0	0.0	0.0%
PRE	21-PRE		0.00	0.00	NA	TN	NA		0.0	0.0	0.0	0.0%
PRE	22-PRE		0.00	0.00	NA	TN	NA		0.0	0.0	0.0	0.0%
PRE	23-PRE		0.00	0.00	NA	TN	NA		0.0	0.0	0.0	0.0%
PRE	24-PRE		0.00	0.00	NA	TN	NA		0.0	0.0	0.0	0.0%
PRE	25-PRE		0.00	0.00	NA	TN	NA		0.0	0.0	0.0	0.0%
		TOTAL	1.89	0.26				TOTAL	4.6	4.6	0.0	0.0%

Date (MM/DD/YYYY): 11/17/2012
Project Name: GE Fletcher Paint
Town/City: Milford, New Hampshire
Impacted Surface Waters: Souhegan River
Applicant: General Electric Co.
DES File #:

POST-DEVELOPMENT

PRE OR POST - DEV	SUB-AREA	POINT OF ANALYSIS NUMBER	AREA (acres)	Effective Impervious Area (acres)	Area Fertilized Annually (acres)	POLLUTANT	PERCENT REDUCTION IN FERTILIZER APPLICATION RATE	BMPS	LOAD (NO BMPS) (lbs/yr)	LOAD (WITH BMPS) (lbs/yr)	LOAD REDUCTION DUE TO BMPS (lbs/yr)	PERCENT REMOVAL
POST	P-1 to P-3	1	0.47	0.37	0.00	TN	26.5%	Bioretention System - North Side of Parking Area	6.2	2.2	4.0	65.0%
POST	P-7 to P-8	2	1.01	0.03	0.00	TN	26.5%		1.2	1.2	0.0	0.0%
POST	P-9 to P-10	3	0.33	0.04	0.00	TN	26.5%		0.8	0.8	0.0	0.0%
POST	4-POST		0.00	0.00	0.00	TN	26.5%		0.0	0.0	0.0	0.0%
POST	5-POST		0.00	0.00	0.00	TN	26.5%		0.0	0.0	0.0	0.0%
POST	6-POST		0.00	0.00	0.00	TN	26.5%		0.0	0.0	0.0	0.0%
POST	7-POST		0.00	0.00	0.00	TN	26.5%		0.0	0.0	0.0	0.0%
POST	8-POST		0.00	0.00	0.00	TN	26.5%		0.0	0.0	0.0	0.0%
POST	9-POST		0.00	0.00	0.00	TN	26.5%		0.0	0.0	0.0	0.0%
POST	10-POST		0.00	0.00	0.00	TN	26.5%		0.0	0.0	0.0	0.0%
POST	11-POST		0.00	0.00	0.00	TN	26.5%		0.0	0.0	0.0	0.0%
POST	12-POST		0.00	0.00	0.00	TN	26.5%		0.0	0.0	0.0	0.0%
POST	13-POST		0.00	0.00	0.00	TN	26.5%		0.0	0.0	0.0	0.0%
POST	14-POST		0.00	0.00	0.00	TN	26.5%		0.0	0.0	0.0	0.0%
POST	15-POST		0.00	0.00	0.00	TN	26.5%		0.0	0.0	0.0	0.0%
POST	16-POST		0.00	0.00	0.00	TN	26.5%		0.0	0.0	0.0	0.0%
POST	17-POST		0.00	0.00	0.00	TN	26.5%		0.0	0.0	0.0	0.0%
POST	18-POST		0.00	0.00	0.00	TN	26.5%		0.0	0.0	0.0	0.0%
POST	19-POST		0.00	0.00	0.00	TN	26.5%		0.0	0.0	0.0	0.0%
POST	20-POST		0.00	0.00	0.00	TN	26.5%		0.0	0.0	0.0	0.0%
POST	21-POST		0.00	0.00	0.00	TN	26.5%		0.0	0.0	0.0	0.0%
POST	22-POST		0.00	0.00	0.00	TN	26.5%		0.0	0.0	0.0	0.0%
POST	23-POST		0.00	0.00	0.00	TN	26.5%		0.0	0.0	0.0	0.0%
POST	24-POST		0.00	0.00	0.00	TN	26.5%		0.0	0.0	0.0	0.0%
POST	25-POST		0.00	0.00	0.00	TN	26.5%		0.0	0.0	0.0	0.0%
		TOTAL	1.81	0.44	0.00			TOTAL	8.1	4.1	4.0	49.5%

Stormwater Drainage Ditch
Design Calculations

ARCADIS BBL
Infrastructure, environment, facilities

Calculation Sheet

Client: General Electric Company **Project:** 20985.002
Prepared by: Paul Baltzersen and Thomas Steiner, P.E. **Date:** 5/29/2007
Title: Fletcher's Paint Works and Storage Facility
Reviewed By: WAR **Date:** 5/29/2007

Subject: Elm Street Area Stormwater Drainage Ditch Design

Objective:

Design the proposed stormwater drainage ditch (proposed ditch) along the eastern edge of the access road to Keyes Park to convey the estimated peak discharge from the 25-year, 24-hour storm event.

References:

1. Figure 1, "Watershed Area Map," ARCADIS BBL (attached).

2. Drawing G-30, titled "Details," Fletcher's Paint Works and Storage Facility Superfund Site, Intermediate (60%) Design Report, ARCADIS BBL. June 2007 (attached).

3. New Hampshire County Rainfall Frequency Data, United States Department of Agriculture (USDA) Natural Resources Conservation Service (NRCS) (attached).

4. Technical Release 55 – Urban Hydrology for Small Watersheds, Soil Conservation Service. June 1986 (select pages attached).

5. North American Green Erosion Control Materials Design Software, Version 4.3, North American Green. 2003.

ARCADIS BBL
Infrastructure, environment, facilities

Calculation Sheet

Assumptions:

1. The alignment of the proposed ditch will be as shown on Reference 1.

2. As shown on Reference 2, the stormwater drainage ditch will have a triangular geometry with 2H:1V side slopes.

3. The 25-year, 24-hour rainfall amount is approximately 5.1 inches within Hillsborough County, based on Reference 3.

4. The design point is located at the intersection of the proposed ditch alignment and an existing underground storm sewer pipe. A new catch basin will be installed at this intersection to intercept flow from the proposed ditch and convey the flow to the Souhegan River (approximately 70 feet to the east) via the existing storm sewer pipe.

5. The watershed boundary and design point used for analysis are shown on the attached watershed area map (Reference 1).

6. The completed ditch will be lined with unreinforced vegetation. A temporary erosion control mat (ECM) will be used to stabilize the ditch against erosion during the establishment of vegetation.

7. The stability and capacity (i.e., depth) of the proposed ditch will be evaluated under two design conditions:

   - Newly Graded Condition: Proposed "Open Space" areas are newly graded (i.e., bare soil) and vegetation is not yet established within the proposed ditch. A temporary ECM will be used to stabilize the ditch under these conditions.

Calculation Sheet

- Vegetated Condition: All vegetation on site is fully established, including the vegetative lining within the proposed ditch.

8. The stability of the proposed ditch under the Newly Graded Condition will be designed using an unvegetated temporary ECM on the steepest representative slope. The capacity (i.e., depth) of the proposed ditch under the Vegetated Condition will be designed using unreinforced Class A vegetation (i.e., 12 to 24 inches tall – unmowed) and the flattest representative slope. The stability of the proposed ditch under the Vegetated Condition will be designed using unreinforced Class E vegetation (i.e., 0 to 2 inches tall – closely mowed) and the steepest representative slope.

9. The entire watershed area will be excavated and backfilled with imported soil material. Due to a shallow confining clay layer within proposed capped areas of the Site (Reference 2), and uncertainty of the nature of the imported fill that will be used to backfill other areas of the Site, it is assumed that the entire watershed area will be underlain by soils of Hydrologic Soil Group C under proposed conditions. The composite runoff curve numbers (CNs) used for analysis are based on References 1 and 4, as follows:

- Newly Graded Condition:
  - newly graded areas, CN = 91 (~70% of watershed area)
  - paved road areas, CN = 98 (~30% of watershed area)
  - Composite CN = 93
- Vegetated Condition:
  - open space, good condition, CN = 74 (~70% of watershed area)
  - paved road areas, CN = 98 (~30% of watershed area)
  - Composite CN = 81

Calculation Sheet

10. Manning's "n" values and permissible shear stress values for the channel lining materials are calculated using Reference 5. Reference 5 is also used to evaluate the stability of the proposed ditch under proposed design conditions.

Calculations:

1. Estimated Peak Discharge

The contributing watershed area for the proposed ditch is approximately 0.43 acre. The estimated peak discharge under each design condition has been calculated using the procedures outlined in Reference 4. Detailed calculations are provided in the attached worksheets. The following table summarizes the results of the peak discharge calculations:

Design Condition	Composite Curve Number	Time of Concentration [hrs]	Estimated Peak Discharge [cfs]
Newly Graded	93	0.039	1.9
Vegetated	81	0.083	1.4

2. Estimated Hydraulic Conditions

The following table summarizes the results of the hydraulic analysis under each design condition:

ARCADIS BBL
Infrastructure, environment, facilities

Calculation Sheet

Design Condition	Estimated Peak Discharge [cfs]	Channel Slope [ft/ft]	Flow Depth [ft]	Flow Velocity [ft/sec]	Calculated Shear Stress[1] [psf]	Permissible Shear Stress[1] [psf]	Factor of Safety[2]
Newly Graded (S75 ECM)[4]	1.9	0.040	0.62	2.43	1.56 (S150)[3]	1.55 (S150)[3]	1.12
Vegetated (Class A)	1.4	0.014	1.43	0.34	1.25 (Vegetation)[3]	7.50 (Vegetation)[3]	5.99
Vegetated (Class E)	1.4	0.040	0.55	2.29	0.032 (Soil)[3]	0.035 (Soil)[3]	1.09

Notes:

1 The Calculated Shear Stress and Permissible Shear Stress values represent vegetation, soil, or ECM, depending on which material resulted in the lowest Factor of Safety.

2 The Factor of Safety represents the ratio of Permissible Shear Stress to Calculated Shear Stress.

3 Sandy Loam is assumed for design purposes given its relatively low permissible shear stress.

4 Proposed ditch is analyzed with an S150 Temporary ECM lining, as manufactured by North American Green, under Newly Graded conditions.

As shown in the table above, the maximum depth of flow anticipated under unmowed conditions (i.e., Class A vegetation) is approximately 1.43 feet. The Factor of Safety against soil erosion under closely-mowed conditions (i.e., Class E vegetation) is approximately 1.09. During interim conditions, while vegetation is becoming established, an S150 temporary ECM provides a Factor of Safety of 1.12 against erosion.

The output from Reference 5 is included as an attachment to this calculation.

ARCADIS BBL
Infrastructure, environment, facilities

Calculation Sheet

Summary:

Based on the calculations above, a 1.5-foot deep triangular ditch lined with unreinforced vegetation can convey the anticipated peak discharge from the 25-year, 24-hour storm event without overtopping, under unmowed conditions, while maintaining an estimated Factor of Safety of 5.99 against erosion. Under closely-mowed conditions, the proposed ditch can convey the 25-year, 24-hour peak discharge without overtopping, while maintaining an estimated Factor of Safety of 1.09 against erosion. Under newly graded conditions, while the vegetative lining is becoming established, an S150 temporary ECM secured with a Type "D" staple pattern (see manufacturer's guidelines), or equivalent product, can provide an estimated Factor of Safety of 1.12 against erosion.

Attachments

Figure 1 – Watershed Area Map

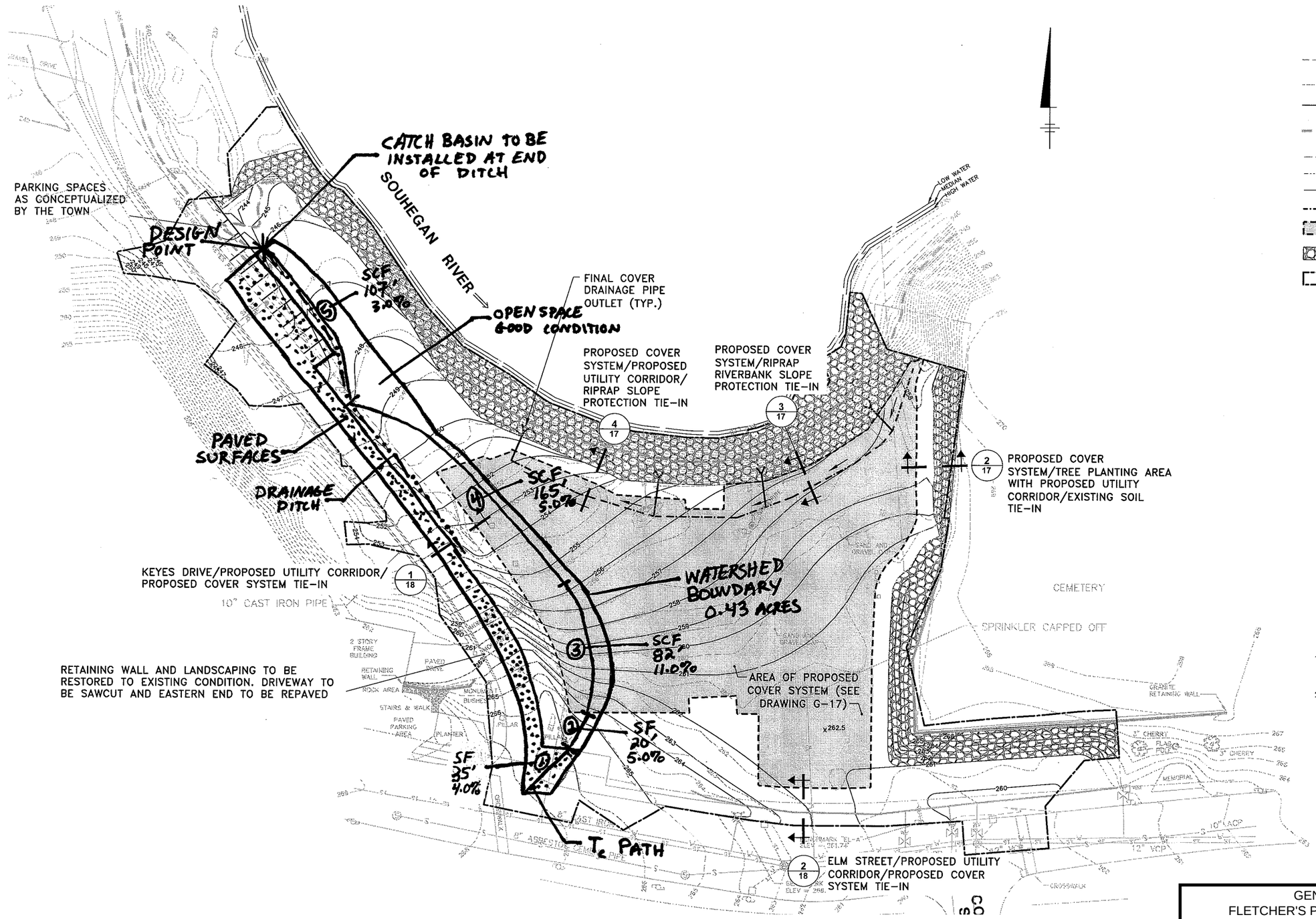

LEGEND:

- INDEX SURFACE ELEVATION CONTOUR
- INTERMEDIATE SURFACE ELEVATION CONTOUR
- PROPOSED CONTOUR
- DEPICTS APPROXIMATE ELEVATION OF 100-YEAR FLOOD PLAIN (245)
- PROPERTY LINE
- RIGHT-OF-WAY
- EXISTING EDGE OF WATER
- FINAL COVER DRAINAGE PIPE
- APPROXIMATE AREA OF PROPOSED COVER SYSTEM (1/17)
- APPROXIMATE LOCATION OF PROPOSED RIPRAP
- APPROXIMATE AREA TO BE RESTORED
- UTILITY POLE
- CATCH BASIN
- SANITARY MANHOLE
- STORM MANHOLE
- WATER VALVE
- WATER METER
- TELEPHONE JACK
- FIRE HYDRANT
- ACP ASBESTOS CONCRETE PIPE
- VCP VITRIFIED CLAY PIPE

NOTES:

1. REFER TO SHEET G-2 FOR GENERAL NOTES PERTAINING TO BASE MAPPING, CONTRACT REQUIREMENTS, AND SITE INFORMATION.
2. THIS DRAWING MAY NOT INDICATE ALL FEATURES SUBJECT TO REPLACEMENT AS PART OF SITE RESTORATION ACTIVITIES. THIS WILL NOT RELIEVE THE CONTRACTOR FROM REPLACING ANY AND ALL SUCH ITEMS AT NO ADDITIONAL COST TO GE.

GENERAL ELECTRIC COMPANY
FLETCHER'S PAINT WORKS AND STORAGE FACILITY

FIGURE 1
WATERSHED AREA MAP

ARCADIS BBL

Drawing G-30 Details

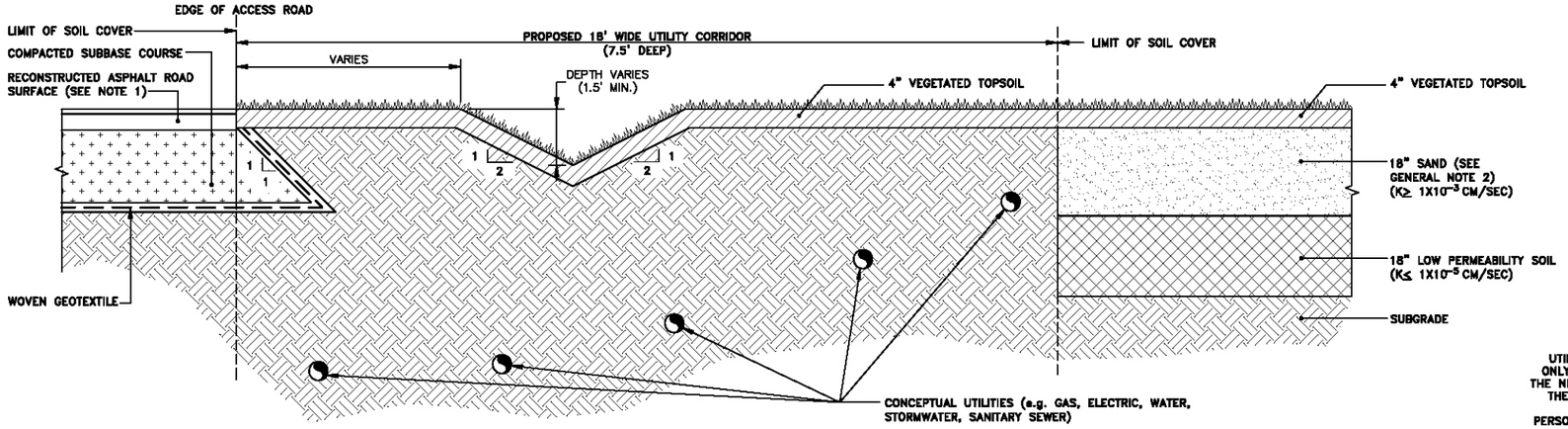

NOTE:

1. ROAD SURFACE SHALL BE RECONSTRUCTED TO MEET DIMENSIONS AND THICKNESSES OF CURRENT ACCESS ROAD. TOTAL ASPHALT THICKNESS SHALL BE 4.5 INCHES (MAXIMUM).
2. DITCH SHALL BE LINED WITH TEMPORARY EROSION CONTROL MAT (S150, AS MANUFACTURED BY NORTH AMERICAN GREEN, OR EQUIVALENT) AND SECURED WITH A TYPE "D" STAPLE PATTERN, IN ACCORDANCE WITH MANUFACTURER'S INSTALLATION GUIDELINES, IMMEDIATELY FOLLOWING SEEDING.

KEYES DRIVE / PROPOSED UTILITY CORRIDOR / PROPOSED COVER SYSTEM TIE-IN (1)

NOT TO SCALE

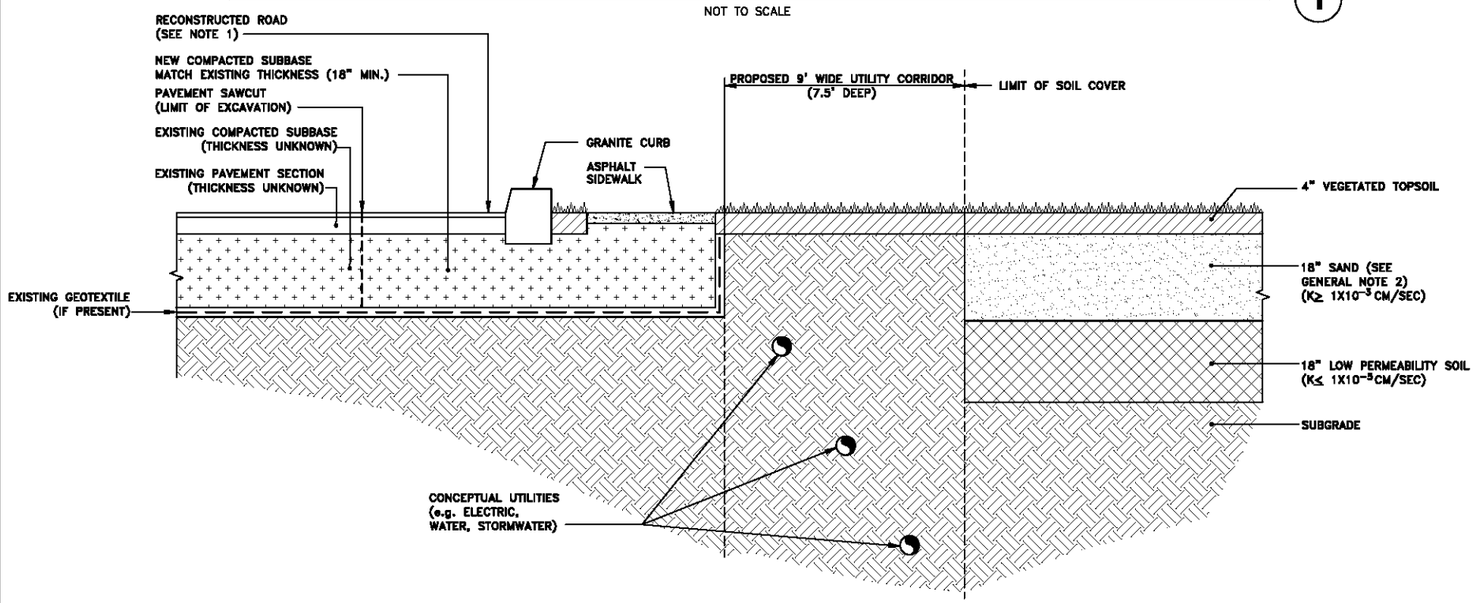

NOTES:

1. ROAD SHALL BE RECONSTRUCTED TO MEET CURRENT NHDOT SPECIFICATIONS (SEE DRAWING T-5).
2. PROPOSED WOVEN GEOTEXTILE SHALL BE CONTINUOUSLY SEWN TO EXISTING GEOTEXTILE (IF PRESENT) TO THE EXTENT PRACTICABLE.

ELM STREET / PROPOSED UTILITY CORRIDOR / PROPOSED COVER SYSTEM TIE-IN (2)

NOT TO SCALE

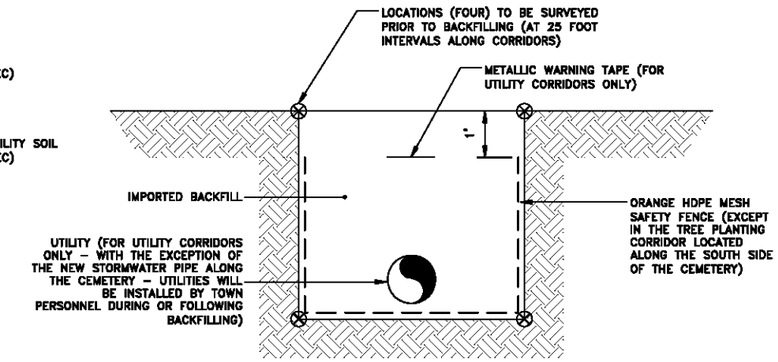

NOTES:

1. ORANGE (HDPE) SAFETY FENCE SHALL BE INSTALLED ALONG THE BOTTOM AND SIDEWALLS OF THE CORRIDOR TO WITHIN ONE FOOT OF FINAL GRADE (EXCEPT IN THE TREE PLANTING CORRIDOR LOCATED ALONG THE SOUTH SIDE OF THE CEMETERY).
2. THE WIDTH, DEPTH AND NUMBER OF UTILITIES IN EACH CORRIDOR VARIES DEPENDING ON LOCATION OF THE CORRIDOR. (SEE DRAWING G-18 FOR SIZES AND LOCATIONS)

TYPICAL UTILITY / TREE PLANTING CORRIDOR CROSS SECTION (3)

NOT TO SCALE

GENERAL NOTES:

1. SUBGRADE INCLUDES FILLED AND COMPACTED IMPORTED SUBGRADE MATERIALS; EXCAVATED AND COMPACTED SOILS FROM NON-REMEDIAL EXCAVATIONS (I.E., SOILS CONTAINING PCB CONCENTRATIONS LESS THAN SCL); AND/OR COMPACTED NATIVE SOIL.
2. NO MORE THAN 10% BY WEIGHT PASSING A #200 SIEVE AND NO MORE THAN 15% BY WEIGHT CONSISTING OF CALCIUM CARBONATE.
3. IN CERTAIN AREAS OF THE SITE, OVEREXCAVATION WILL BE REQUIRED TO INSTALL THE PROPOSED COVER SYSTEM AND UTILITY AND TREE PLANTING CORRIDORS. IN SUCH INSTANCES, MATERIAL EXCAVATED BEYOND THAT REQUIRED TO MEET THE SOIL CLEANUP LEVELS MUST BE USED AS BACKFILL FOR DEEPER EXCAVATIONS THAT ARE UNDER THE COVER (I.E., NOT UNDER UTILITY CORRIDORS, TREE PLANTING AREAS AND RIPRAP SLOPES). IF THIS MATERIAL IS TEMPORARILY STAGED ON SITE, IT MUST BE STAGED IN A CLEAN LINED AREA.
4. UTILITIES ARE SHOWN FOR REFERENCE PURPOSES ONLY. EXACT SIZE, BURY DEPTH, AND CONFIGURATION WITHIN CORRIDOR TO BE DETERMINED BY TOWN OF MILFORD.

DRAFT
FOR EPA REVIEW

ORIGINAL SCALE APPLIES TO 22"X34" DRAWING

THIS DRAWING WAS PREPARED AT THE SCALE(S) INDICATED. INACCURACIES IN THE STATED SCALE(S) MAY BE INTRODUCED WHEN DRAWINGS ARE REPRODUCED. USE THE GRAPHIC SCALE BAR(S) TO DETERMINE THE ACTUAL SCALE(S) OF THIS DRAWING.

No.	Date	Revisions	Init

THIS DRAWING IS THE PROPERTY OF ARCADIS BBL AND MAY NOT BE REPRODUCED OR ALTERED IN WHOLE OR IN PART WITHOUT THE EXPRESS WRITTEN PERMISSION OF ARCADIS BBL

Professional Engineer's Name: LOWELL W. McBURNEY
Professional Engineer's No.: 10767
State: NEW HAMPSHIRE | Date Signed:
Project Mgr.: CRA | Designed by: ACB | Drawn by: LAF

ARCADIS BBL
Infrastructure, environment, facilities

GENERAL ELECTRIC COMPANY
FLETCHER'S PAINT WORKS AND STORAGE FACILITY SUPERFUND SITE
MILFORD, NEW HAMPSHIRE
INTERMEDIATE (60%) DESIGN REPORT

DETAILS

ARCADIS Project No. 209.85
Date JUNE 2007
ARCADIS of New York, Inc.
6723 Towpath Road
Syracuse, NY 13214
315-446-9120

G-30

SYR-85-BGP LAF AMS LAYER: ON=*, OFF=REF*
G:\CAD\GE-CAD\GE_ACTIVE\C\20985002\6DESIGN\OFF-SITE\20985018.DWG SAVED:6/10/2007 1:48 PM LAYOUT:G-30 PAGESETUP:CDLB-8150-PDF PENTABLE:Pltcont.ctb PRINTED:6/11/2007 2:16 PM BY:LFORAKER
PROJECTNAME:---- IMAGES:
XREFS: 20985X00

New Hampshire County Rainfall Frequency Data

United States Department of Agriculture
NRCS Natural Resources Conservation Service

New Hampshire

New Hampshire County Rainfall Frequency Data

County or Area Rainfall Amounts in Inches by Frequency

County or Area	1 Year Inches	2 Years Inches	5 Years Inches	10 Years Inches	25 Years Inches	50 Years Inches	100 Years Inches
Belknap	2.4	2.8	3.7	4.1	5.0	5.5	6.1
Carroll - South	2.5	2.9	3.8	4.3	5.2	5.5	6.2
Carroll - North	3.0	3.3	4.3	5.0	5.7	6.2	6.6
Cheshire	2.4	2.8	3.7	4.2	5.0	5.6	6.3
Coos - South	3.0	3.5	4.1	4.8	5.6	6.2	6.8
Coos - North	2.4	3.0	3.5	4.2	4.9	5.3	6.1
Grafton	2.4	2.7	3.6	4.2	4.9	5.2	5.9
Hillsborough	2.5	2.9	3.8	4.3	5.1	5.7	6.3
Merrimack	2.4	2.8	3.7	4.2	5.0	5.6	6.2
Rockingham	2.5	3.0	3.8	4.3	5.2	5.7	6.4
Strafford	2.5	3.0	3.8	4.3	5.1	5.6	6.3
Sullivan	2.3	2.7	3.6	4.1	4.8	5.3	6.0

TR-55 (Select Pages)

Table 2-2a.—Runoff curve numbers for urban areas[1]

Cover description		Curve numbers for hydrologic soil group—			
Cover type and hydrologic condition	Average percent impervious area[2]	A	B	C	D
Fully developed urban areas (vegetation established)					
Open space (lawns, parks, golf courses, cemeteries, etc.)[3]:					
Poor condition (grass cover < 50%)		68	79	86	89
Fair condition (grass cover 50% to 75%)		49	69	79	84
Good condition (grass cover > 75%)		39	61	74	80
Impervious areas:					
Paved parking lots, roofs, driveways, etc. (excluding right-of-way)		98	98	98	98
Streets and roads:					
Paved; curbs and storm sewers (excluding right-of-way)		98	98	98	98
Paved; open ditches (including right-of-way)		83	89	92	93
Gravel (including right-of-way)		76	85	89	91
Dirt (including right-of-way)		72	82	87	89
Western desert urban areas:					
Natural desert landscaping (pervious areas only)[4]		63	77	85	88
Artificial desert landscaping (impervious weed barrier, desert shrub with 1- to 2-inch sand or gravel mulch and basin borders)		96	96	96	96
Urban districts:					
Commercial and business	85	89	92	94	95
Industrial	72	81	88	91	93
Residential districts by average lot size:					
1/8 acre or less (town houses)	65	77	85	90	92
1/4 acre	38	61	75	83	87
1/3 acre	30	57	72	81	86
1/2 acre	25	54	70	80	85
1 acre	20	51	68	79	84
2 acres	12	46	65	77	82
Developing urban areas					
Newly graded areas (pervious areas only, no vegetation)[5]		77	86	91	94
Idle lands (CN's are determined using cover types similar to those in table 2-2c).					

[1]Average runoff condition, and $I_a = 0.2S$.
[2]The average percent impervious area shown was used to develop the composite CN's. Other assumptions are as follows: impervious areas are directly connected to the drainage system, impervious areas have a CN of 98, and pervious areas are considered equivalent to open space in good hydrologic condition. CN's for other combinations of conditions may be computed using figure 2-3 or 2-4.
[3]CN's shown are equivalent to those of pasture. Composite CN's may be computed for other combinations of open space cover type.
[4]Composite CN's for natural desert landscaping should be computed using figures 2-3 or 2-4 based on the impervious area percentage (CN = 98) and the pervious area CN. The pervious area CN's are assumed equivalent to desert shrub in poor hydrologic condition.
[5]Composite CN's to use for the design of temporary measures during grading and construction should be computed using figure 2-3 or 2-4, based on the degree of development (impervious area percentage) and the CN's for the newly graded pervious areas.

Sheet flow

Sheet flow is flow over plane surfaces. It usually occurs in the headwater of streams. With sheet flow, the friction value (Manning's n) is an effective roughness coefficient that includes the effect of raindrop impact; drag over the plane surface; obstacles such as litter, crop ridges, and rocks; and erosion and transportation of sediment. These n values are for very shallow flow depths of about 0.1 foot or so. Table 3-1 gives Manning's n values for sheet flow for various surface conditions.

For sheet flow of less than 300 feet, use Manning's kinematic solution (Overton and Meadows 1976) to compute T_t:

$$T_t = \frac{0.007\,(nL)^{0.8}}{(P_2)^{0.5}\,s^{0.4}} \qquad \text{[Eq. 3-3]}$$

Table 3-1.—Roughness coefficients (Manning's n) for sheet flow

Surface description	n[1]
Smooth surfaces (concrete, asphalt, gravel, or bare soil)	0.011
Fallow (no residue)	0.05
Cultivated soils:	
Residue cover ≤20%	0.06
Residue cover >20%	0.17
Grass:	
Short grass prairie	0.15
Dense grasses[2]	0.24
Bermudagrass	0.41
Range (natural)	0.13
Woods:[3]	
Light underbrush	0.40
Dense underbrush	0.80

[1]The n values are a composite of information compiled by Engman (1986).
[2]Includes species such as weeping lovegrass, bluegrass, buffalo grass, blue grama grass, and native grass mixtures.
[3]When selecting n, consider cover to a height of about 0.1 ft. This is the only part of the plant cover that will obstruct sheet flow.

where

T_t = travel time (hr),
n = Manning's roughness coefficient (table 3-1),
L = flow length (ft),
P_2 = 2-year, 24-hour rainfall (in), and
s = slope of hydraulic grade line (land slope, ft/ft).

This simplified form of the Manning's kinematic solution is based on the following: (1) shallow steady uniform flow, (2) constant intensity of rainfall excess (that part of a rain available for runoff), (3) rainfall duration of 24 hours, and (4) minor effect of infiltration on travel time. Rainfall depth can be obtained from appendix B.

Shallow concentrated flow

After a maximum of 300 feet, sheet flow usually becomes shallow concentrated flow. The average velocity for this flow can be determined from figure 3-1, in which average velocity is a function of watercourse slope and type of channel. For slopes less than 0.005 ft/ft, use equations given in appendix F for figure 3-1. Tillage can affect the direction of shallow concentrated flow. Flow may not always be directly down the watershed slope if tillage runs across the slope.

After determining average velocity in figure 3-1, use equation 3-1 to estimate travel time for the shallow concentrated flow segment.

Open channels

Open channels are assumed to begin where surveyed cross section information has been obtained, where channels are visible on aerial photographs, or where blue lines (indicating streams) appear on United States Geological Survey (USGS) quadrangle sheets. Manning's equation or water surface profile information can be used to estimate average flow velocity. Average flow velocity is usually determined for bank-full elevation.

Chapter 4: Graphical Peak Discharge method

This chapter presents the Graphical Peak Discharge method for computing peak discharge from rural and urban areas. The Graphical method was developed from hydrograph analyses using TR-20, "Computer Program for Project Formulation—Hydrology" (SCS 1983). The peak discharge equation used is

$$q_p = q_u A_m Q F_p \qquad \text{[Eq. 4-1]}$$

where

q_p = peak discharge (cfs);
q_u = unit peak discharge (csm/in);
A_m = drainage area (mi²);
Q = runoff (in); and
F_p = pond and swamp adjustment factor.

The input requirements for the Graphical method are as follows: (1) T_c (hr), (2) drainage area (mi²), (3) appropriate rainfall distribution (I, IA, II, or III), (4) 24-hour rainfall (in), and (5) CN. If pond and swamp areas are spread throughout the watershed and are not considered in the T_c computation, an adjustment for pond and swamp areas is also needed.

Peak discharge computation

For a selected rainfall frequency, the 24-hour rainfall (P) is obtained from appendix B or more detailed local precipitation maps. CN and total runoff (Q) for the watershed are computed according to the methods outlined in chapter 2. The CN is used to determine the initial abstraction (I_a) from table 4-1. I_a/P is then computed.

If the computed I_a/P ratio is outside the range shown in exhibit 4 (4-I, 4-IA, 4-II, and 4-III) for the rainfall distribution of interest, then the limiting value should be used. If the ratio falls between the limiting values, use linear interpolation. Figure 4-1 illustrates the sensitivity of I_a/P to CN and P.

Peak discharge per square mile per inch of runoff (q_u) is obtained from exhibit 4-I, 4-IA, 4-II, or 4-III by using T_c (chapter 3), rainfall distribution type, and I_a/P ratio. The pond and swamp adjustment factor is obtained from table 4-2 (rounded to the nearest table value). Use worksheet 4 in appendix D to aid in computing the peak discharge using the Graphical method.

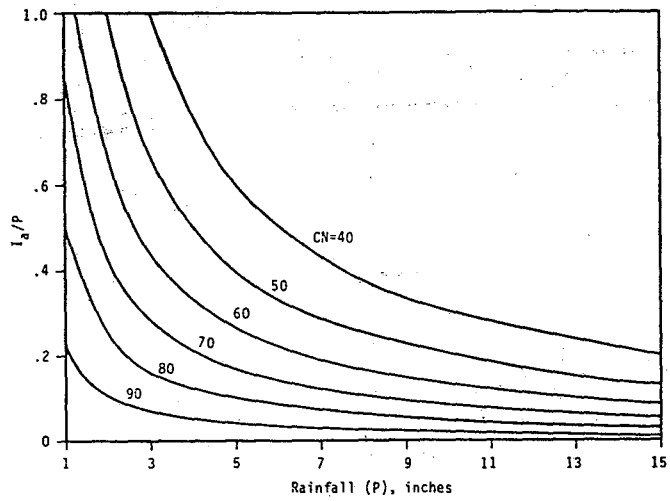

Figure 4-1.—Variation of I_a/P for P and CN.

Table 4-1.—I_a values for runoff curve numbers

Curve number	I_a (in)	Curve number	I_a (in)
40	3.000	70	0.857
41	2.878	71	0.817
42	2.762	72	0.778
43	2.651	73	0.740
44	2.545	74	0.703
45	2.444	75	0.667
46	2.348	76	0.632
47	2.255	77	0.597
48	2.167	78	0.564
49	2.082	79	0.532
50	2.000	80	0.500
51	1.922	81	0.469
52	1.846	82	0.439
53	1.774	83	0.410
54	1.704	84	0.381
55	1.636	85	0.353
56	1.571	86	0.326
57	1.509	87	0.299
58	1.448	88	0.273
59	1.390	89	0.247
60	1.333	90	0.222
61	1.279	91	0.198
62	1.226	92	0.174
63	1.175	93	0.151
64	1.125	94	0.128
65	1.077	95	0.105
66	1.030	96	0.083
67	0.985	97	0.062
68	0.941	98	0.041
69	0.899		

Exhibit 4-III: Unit peak discharge (q_u) for SCS type III rainfall distribution

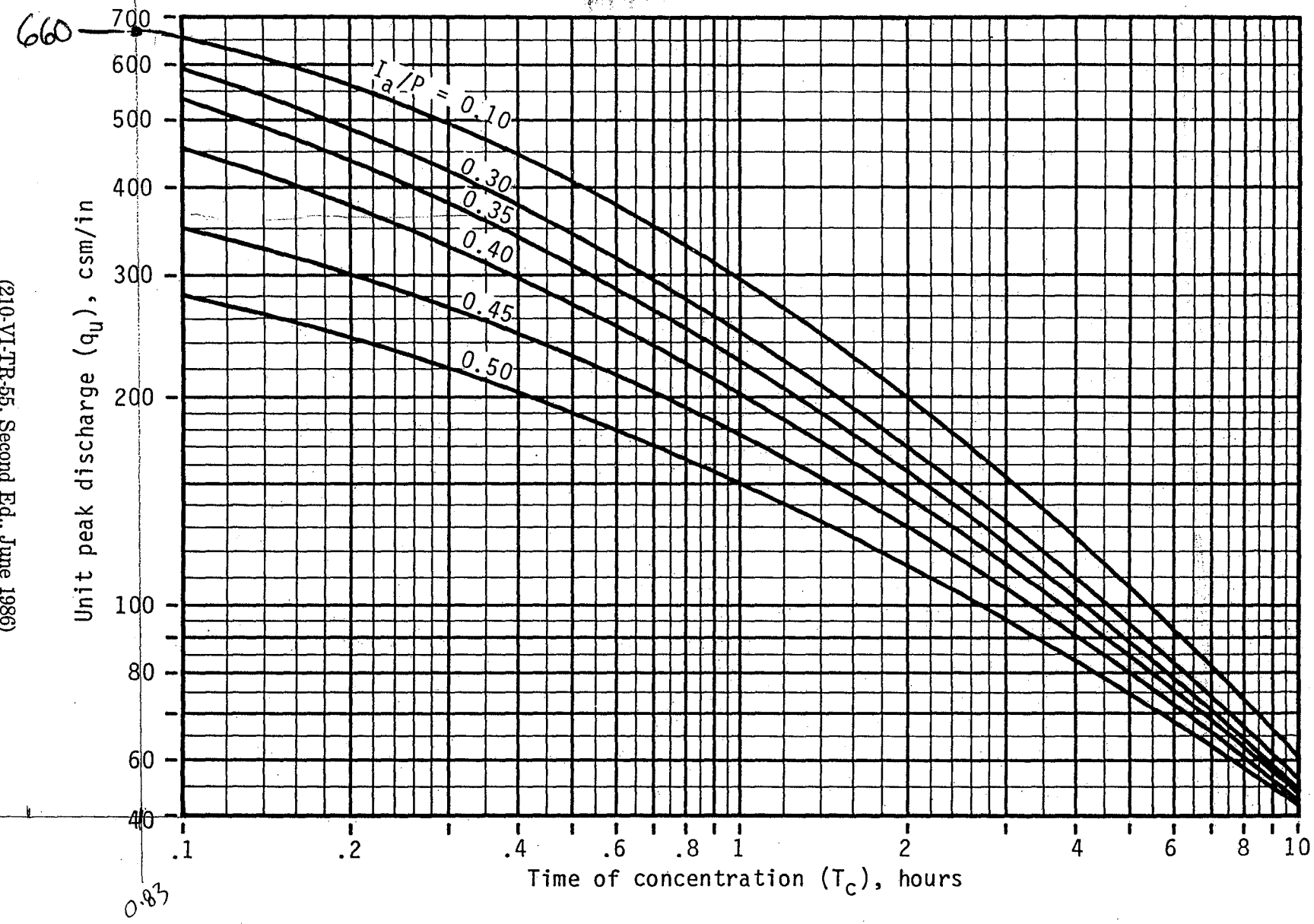

Supporting Calculations and Output

NEWLY GRADED WATERSHED CONDITION

Worksheet 2: Runoff curve number and runoff

Project GE - FLETCHER'S PAINT By PDB Date 05/11/07

Location MILFORD, NH Checked _____ Date _____

Circle one: Present (Developed) NEWLY GRADED

1. Runoff curve number (CN)

Soil name and hydrologic group (appendix A)	Cover description (cover type, treatment, and hydrologic condition; percent impervious; unconnected/connected impervious area ratio)	CN 1/ Table 2-2	CN 1/ Fig. 2-3	CN 1/ Fig. 2-4	Area ☐ acres ☐ mi² ☒ %	Product of CN x area
HINCKLEY LOAMY SAND A	PAVEMENT	98			30	2940
IMPORTED FILL ASSUME C	NEWLY GRADED AREAS - NO VEGETATION	91			70	6370
				Totals =	100	9310

1/ Use only one CN source per line.

CN (weighted) = $\frac{\text{total product}}{\text{total area}} = \frac{9310}{10} = 93.1$; Use CN = 93

2. Runoff

	Storm #1	Storm #2	Storm #3
Frequency ..... yr	25		
Rainfall, P (24-hour) ..... in	5.1		
Runoff, Q ..... in (Use P and CN with table 2-1, fig. 2-1, or eqs. 2-3 and 2-4.)	4.30		

Worksheet 3: Time of concentration (T_c) or travel time (T_t)

Project GE: FLETCHER'S PAINT By PDB Date 05/11/07

Location MILFORD, NH Checked _____ Date _____

Circle one: Present (Developed) NEWLY GRADED

Circle one: (T_c) T_t through subarea

NOTES: Space for as many as two segments per flow type can be used for each worksheet.

Include a map, schematic, or description of flow segments.

Sheet flow (Applicable to T_c only) — Segment ID		1	2	
1. Surface description (table 3-1)		SMOOTH PAVED	BARE SOIL	
2. Manning's roughness coeff., n (table 3-1) ..		0.011	0.011	
3. Flow length, L (total L ≤ 300 ft)	ft	35	20	
4. Two-yr 24-hr rainfall, P_2	in	2.9	2.9	
5. Land slope, s	ft/ft	0.04	0.05	
6. $T_t = \frac{0.007\ (nL)^{0.8}}{P_2^{0.5}\ s^{0.4}}$ Compute T_t	hr	0.007 +	0.004 =	0.011

Shallow concentrated flow — Segment ID		3	4	5	
7. Surface description (paved or unpaved)		U	U	U	
8. Flow length, L	ft	82	165	107	
9. Watercourse slope, s ..... (9/82 8/165 3/107)	ft/ft	0.11	0.05	0.03	
10. Average velocity, V (figure 3-1)	ft/s	5.5	3.6	2.8	
11. $T_t = \frac{L}{3600\ V}$ Compute T_t	hr	0.004 +	0.013 +	0.011 =	0.028

Channel flow — Segment ID				
12. Cross sectional flow area, a	ft^2			
13. Wetted perimeter, p_w	ft			
14. Hydraulic radius, $r = \frac{a}{p_w}$ Compute r	ft			
15. Channel slope, s	ft/ft			
16. Manning's roughness coeff., n				
17. $V = \frac{1.49\ r^{2/3}\ s^{1/2}}{n}$ Compute V	ft/s			
18. Flow length, L	ft			
19. $T_t = \frac{L}{3600\ V}$ Compute T_t	hr	+	=	

20. Watershed or subarea T_c or T_t (add T_t in steps 6, 11, and 19) ..... hr 0.039

USE 0.083 (MIN)

Worksheet 4: Graphical Peak Discharge method

Project GE: FLETCHER'S PAINT By PDB Date 05/11/07

Location MILFORD, NH Checked _____ Date _____

Circle one: Present (Developed) NEWLY GRADED

1. Data:

Drainage area ..... A_m = 6.72×10^{-4} mi^2 (0.43 acres/640)

Runoff curve number .... CN = 93 (From worksheet 2)

Time of concentration .. T_c = 0.083 hr (From worksheet 3)

Rainfall distribution type = III (I, IA, II, III)

Pond and swamp areas spread throughout watershed ..... = Ø percent of A_m (Ø acres or mi^2 covered)

		Storm #1	Storm #2	Storm #3
2. Frequency	yr	25		
3. Rainfall, P (24-hour)	in	5.1		
4. Initial abstraction, I_a ..... (Use CN with table 4-1.)	in	0.151		
5. Compute I_a/P		0.030		
6. Unit peak discharge, q_u ..... (Use T_c and I_a/P with exhibit 4- II)	csm/in	660		
7. Runoff, Q ..... (From worksheet 2).	in	4.30		
8. Pond and swamp adjustment factor, F_p .... (Use percent pond and swamp area with table 4-2. Factor is 1.0 for zero percent pond and swamp area.)		1.0		
9. Peak discharge, q_p ..... (Where $q_p = q_u A_m Q F_p$)	cfs	1.91		

$$q_p = (660)(6.72 \times 10^{-4})(4.30)(1)$$

$$= 1.91$$

North American Green - ECMDS Version 4.3	5/30/2007	07:43 AM	COMPUTED BY: TAS
PROJECT NAME: Fletcher's Paint	PROJECT NO.: 20985.002		
FROM STATION/REACH:	TO STATION/REACH:	DRAINAGE AREA: 0.43 ac	DESIGN FREQUENCY: 25 yr

HYDRAULIC RESULTS

Discharge (cfs)	Peak Flow Period (hrs)	Velocity (fps)	Area (sq.ft)	Hydraulic Radius(ft)	Normal Depth (ft)
1.9	2.0	2.43	0.78	0.28	0.62

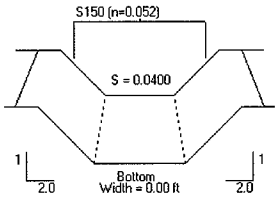

Not to Scale

LINER RESULTS

Reach	Matting Type / Staple Pattern	Stability Analysis	Vegetation Characteristics: Phase	Class	Type	Density	Permissible Shear Stress (psf)	Calculated Shear Stress (psf)	Safety Factor	Remarks
Straight	S150	Unvegetated					1.75	1.56	1.12	STABLE
	Staple D									

Back to Input Screen

VEGETATED WATERSHED CONDITION

Worksheet 2: Runoff curve number and runoff

Project GE - FLETCHER'S PAINT By PDB Date 05/09/07

Location MILFORD, NH Checked _____ Date _____

Circle one: Present (Developed) VEGETATED

1. Runoff curve number (CN)

Soil name and hydrologic group (appendix A)	Cover description (cover type, treatment, and hydrologic condition; percent impervious; unconnected/connected impervious area ratio)	CN 1/ Table 2-2	CN 1/ Fig. 2-3	CN 1/ Fig. 2-4	Area ☐acres ☐mi² ☒%	Product of CN x area
HINCKLEY LOAMY SAND A	PAVEMENT	98			30	2940
IMPORTED FILL ASSUME C	OPEN SPACE - GOOD CONDITION (VEGETATED)	74			70	5180
				Totals =	100	8120

1/ Use only one CN source per line.

CN (weighted) = $\frac{\text{total product}}{\text{total area}} = \frac{8120}{100} = 81.2$; Use CN = 81

2. Runoff

	Storm #1	Storm #2	Storm #3
Frequency ..... yr	25		
Rainfall, P (24-hour) ..... in	5.1		
Runoff, Q ..... in (Use P and CN with table 2-1, fig. 2-1, or eqs. 2-3 and 2-4.)	3.07		

Worksheet 3: Time of concentration (T_c) or travel time (T_t)

Project GE - FLETCHER'S PAINT By PDB Date 05/09/07

Location MILFORD, NH Checked _____ Date _____

Circle one: Present (Developed) VEGETATED

Circle one: (T_c) T_t through subarea _____

NOTES: Space for as many as two segments per flow type can be used for each worksheet.

Include a map, schematic, or description of flow segments.

Sheet flow (Applicable to T_c only)

		Segment ID	1	2	
1.	Surface description (table 3-1)		SMOOTH PAVED	DENSE GRASS	
2.	Manning's roughness coeff., n (table 3-1) ..		0.011	0.24	
3.	Flow length, L (total L $\leq$ 300 ft)	ft	35	20	
4.	Two-yr 24-hr rainfall, P_2	in	2.9	2.9	
5.	Land slope, s	ft/ft	0.04	0.05	
6.	$T_t = \frac{0.007\ (nL)^{0.8}}{P_2^{0.5}\ s^{0.4}}$ Compute T_t	hr	0.007 +	0.048 =	0.055

Shallow concentrated flow

		Segment ID	3	4	5	
7.	Surface description (paved or unpaved)		U	U	U	
8.	Flow length, L	ft	82	165	107	
9.	Watercourse slope, s	ft/ft	0.11	0.05	0.03	
10.	Average velocity, V (figure 3-1)	ft/s	5.5	3.6	2.8	
11.	$T_t = \frac{L}{3600\ V}$ Compute T_t	hr	0.004 +	0.013 +	0.011	0.028

Channel flow

		Segment ID			
12.	Cross sectional flow area, a	ft^2			
13.	Wetted perimeter, p_w	ft			
14.	Hydraulic radius, $r = \frac{a}{p_w}$ Compute r	ft			
15.	Channel slope, s	ft/ft			
16.	Manning's roughness coeff., n				
17.	$V = \frac{1.49\ r^{2/3}\ s^{1/2}}{n}$ Compute V	ft/s			
18.	Flow length, L	ft			
19.	$T_t = \frac{L}{3600\ V}$ Compute T_t	hr	+	=	

20. Watershed or subarea T_c or T_t (add T_t in steps 6, 11, and 19) ..... hr 0.083

USE 0.083 (MIN)

Worksheet 4: Graphical Peak Discharge method

Project GE - FLETCHER'S PAINT By PDB Date 05/10/07

Location MILFORD, NH Checked _____ Date _____

Circle one: Present (Developed) VEGETATED

1. Data:

Drainage area ..... A_m = 6.72×10^{-4} mi^2 (acres/640)

Runoff curve number .... CN = 81 (From worksheet 2)

Time of concentration .. T_c = 0.083 hr (From worksheet 3)

Rainfall distribution type = III (I, IA, II, III)

Pond and swamp areas spread throughout watershed ..... = Ø percent of A_m (Ø acres or mi^2 covered)

		Storm #1	Storm #2	Storm #3
2. Frequency	yr	25		
3. Rainfall, P (24-hour)	in	5.1		
4. Initial abstraction, I_a ..... (Use CN with table 4-1.)	in	0.469		
5. Compute I_a/P		0.092		
6. Unit peak discharge, q_u ..... (Use T_c and I_a/P with exhibit 4- II)	csm/in	660		
7. Runoff, Q ..... (From worksheet 2).	in	3.07		
8. Pond and swamp adjustment factor, F_p .... (Use percent pond and swamp area with table 4-2. Factor is 1.0 for zero percent pond and swamp area.)		1		
9. Peak discharge, q_p ..... (Where $q_p = q_u A_m Q F_p$)	cfs	1.36		

$$q_p = (660)(6.72 \times 10^{-4})(3.07)(1)$$

$$q_p = 1.36$$

North American Green - ECMDS Version 4.3	5/30/2007 07:28 AM	COMPUTED BY: TAS	
PROJECT NAME: Fletcher's Paint	PROJECT NO.: 20985.002		
FROM STATION/REACH:	TO STATION/REACH:	DRAINAGE AREA: 0.43 ac	DESIGN FREQUENCY: 25 yr

HYDRAULIC RESULTS

Discharge (cfs)	Peak Flow Period (hrs)	Velocity (fps)	Area (sq.ft)	Hydraulic Radius(ft)	Normal Depth (ft)
1.4	2.0	0.34	4.11	0.64	1.43

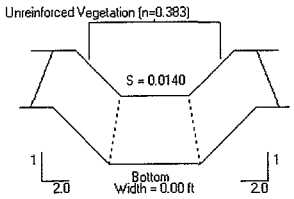

Not to Scale

LINER RESULTS

Reach	Matting Type / Staple Pattern	Stability Analysis	Vegetation Characteristics: Phase	Class	Type	Density	Permissible Shear Stress (psf)	Calculated Shear Stress (psf)	Safety Factor	Remarks
Straight	Unreinforced	Vegetation		A	Mix	75-95%	7.50	1.25	5.99	STABLE
		Soil	Sandy Loam				0.035	0.001	67.59	STABLE

Back to Input Screen

North American Green - ECMDS Version 4.3	5/30/2007	07:40 AM	COMPUTED BY: TAS
PROJECT NAME: Fletcher's Paint	PROJECT NO.: 20985.002		
FROM STATION/REACH:	TO STATION/REACH:	DRAINAGE AREA: 0.43 ac	DESIGN FREQUENCY: 25 yr

HYDRAULIC RESULTS

Discharge (cfs)	Peak Flow Period (hrs)	Velocity (fps)	Area (sq.ft)	Hydraulic Radius(ft)	Normal Depth (ft)
1.4	2.0	2.29	0.61	0.25	0.55

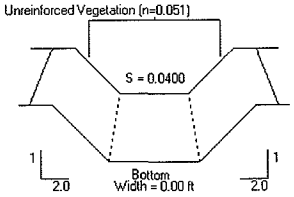

Not to Scale

LINER RESULTS

Reach	Matting Type	Stability Analysis	Vegetation Characteristics				Permissible Shear Stress (psf)	Calculated Shear Stress (psf)	Safety Factor	Remarks
	Staple Pattern		Phase	Class	Type	Density				
Straight	Unreinforced	Vegetation		E	Mix	75-95%	2.16	1.38	1.57	STABLE
		Soil	Sandy Loam				0.035	0.032	1.09	STABLE

Back to Input Screen

Support of Excavation Design –
Prepared by Haley & Aldrich

Mill Street - Calculations

HALEY & ALDRICH	CALCULATIONS	File No.	32608-000
		Sheet	
Client	Arcadis BBL	Date	12/31/07
Project	Fletcher's Paint Works Superfund Site	Computed By	BV
Subject	Support of Excavation 100% Design – Mill Street	Checked By	DRS

100% DESIGN SUBMISSION
MILL STREET
SUPPORT OF EXCAVATION DESIGN
FLETCHER'S PAINT SITE
MILFORD, NH

DECEMBER 31, 2007

DESIGNED BY: BORA VUKAJ
CHECKED BY: DAMIAN SIEBERT P.E.
BRYAN SWEENY P.E.

Support of Excavation Design

Purpose:

Design the solder pile and tremie concrete (SPTC) wall as the support of excavation for the contaminated cells. The support of excavation system will minimize the soil excavation volume and dewatering volume required to remove contaminated soil.

Support of Excavation Layout:

Layout of SPTC wall was based on Drawing G-15 by Arcadis BBL dated June 2007.

References:

"Manual of Steel Construction; Allowable Stress Design," Ninth Edition 1995

"Building Code Requirements for Structural Concrete (ACI 318-05) and Commentary (ACI 318R-02)," 2005

"Manual for Railway Engineering," 2007 by AREMA

"New Hampshire State Building Code"

Method of Analysis:

The SPTC wall was designed with a combination of hand calculations and the computer program Wallap Version 5.04 distributed by GEOSOLVE Copyright (C) 2007 by DL Borin.

HALEY & ALDRICH	CALCULATIONS	File No.	32608-000
		Sheet	2 of 83
Client	Arcadis BBL	Date	12/31/07
Project	Fletcher's Paint Works Superfund Site	Computed By	BV
Subject	Support of Excavation 100% Design – Mill Street	Checked By	DRS

Table of Contents:

Subject	Page No.
Appendix A – Design Cases	
-Design Cases Summary and Plan	3 - 5
-Design Case Cell H	6 - 12
-Design Case Cell I	13 - 18
-Design Case Cell K	19 - 25
-Design Case Cell O	26 - 42
-Design Case Cell R	43 - 54
Appendix B – Bracing Design	
-Internal Bracing Design	55 - 60
Appendix C – Details	
- Toe Pin Design	61 - 63
- Connection Detail Design	64 - 68
- Beam Seat Detail	69 - 72
Appendix D – Background Information	
- Soil Properties	73 - 80
- Railroad Track Surcharge	81 - 83

APPENDIX A

DESIGN CASES

Summary of Results

Max Moment in SPTC wall: 50 k-ft / ft wall
Design Force in Pin: 20 kips / ft wall
Design Force in Bottom Strut: 5.0 kips / ft wall
Design Force in Top Strut: 8.0 kips / ft wall
Design Force in Bottom Strut for Cell H: 8.0 kips / ft wall

Soldier Pile Selection

Soldier Pile Spacing: 5 ft

S_{req} = M * 12 *Spacing / (0.67 * 50 * 1.2)
= 50 * 12 * 5 / (0.67 * 50 * 1.2) = 75 in^3

W24X68 S_{X-X}=154 in^3 154 in^3 > 75 in^3 OK

Soldier Pile Spacing: 6 ft

S_{req} = M * 12 *Spacing / (0.67 * 50 * 1.2)
= 50 * 12 * 6 / (0.67 * 50 * 1.2) = 90 in^3

W24X68 S_{X-X}=154 in^3 154 in^3 > 90 in^3 OK

Use W24x68 for solder pile size for the entire SPTC wall

5 of 83

EXCAVATION CELL	DEPTH OF EXCAVATION (NORTH SIDE)	DEPTH OF EXCAVATION (SOUTH SIDE)
1	3'	0'
2	3'	1.25'
3	3'	1'
4	3' OR 5'	2'
5	5'	3'
6	5'	1'

NOTES:

1. ELEVATIONS BASED ON NORTH AMERICAN VERTICAL DATUM OF 1988.
2. HORIZONTAL DATUM BASED ON NEW HAMPSHIRE STATE PLANE COORDINATE SYSTEM OF 1983.
3. CONTOUR INTERVAL = 1 FOOT.
4. MAP COMPILED FROM ACTUAL FIELD SURVEY PERFORMED BY BBL, INC. FROM JULY 16, 2003 THROUGH AUGUST 14, 2003, AND FROM MERIDAN LAND SERVICES, INC. ON JANUARY 22, 2004, AND BY ARCADIS ON MAY 24, 2007.
5. LOCATION OF UNDERGROUND UTILITIES AND OTHER UNDERGROUND STRUCTURES OBTAINED BY FIELD MEASUREMENTS WHERE POSSIBLE. LOCATION OF WATER, SEWER, AND DRAINAGE UTILITIES OBTAINED FROM TOWN OF MILFORD DEPARTMENT OF PUBLIC WORKS RECORDS.
6. MILL STREET SITE PROPERTY LINE SHOWN WAS ESTABLISHED FROM DEEDS OF RECORD, SURVEY, AND EXISTING MONUMENTATION. OTHER PROPERTY LINES SHOWN WERE OBTAINED FROM TOWN OF MILFORD TAX MAP 25.
7. SEE FIGURE 6 FOR INFORMATION REGARDING THE SAND CAP, INSTALLED FOLLOWING DEMOLITION OF THE FORMER DRAPER COAL TRANSFER BUILDING IN FEBRUARY 2002.

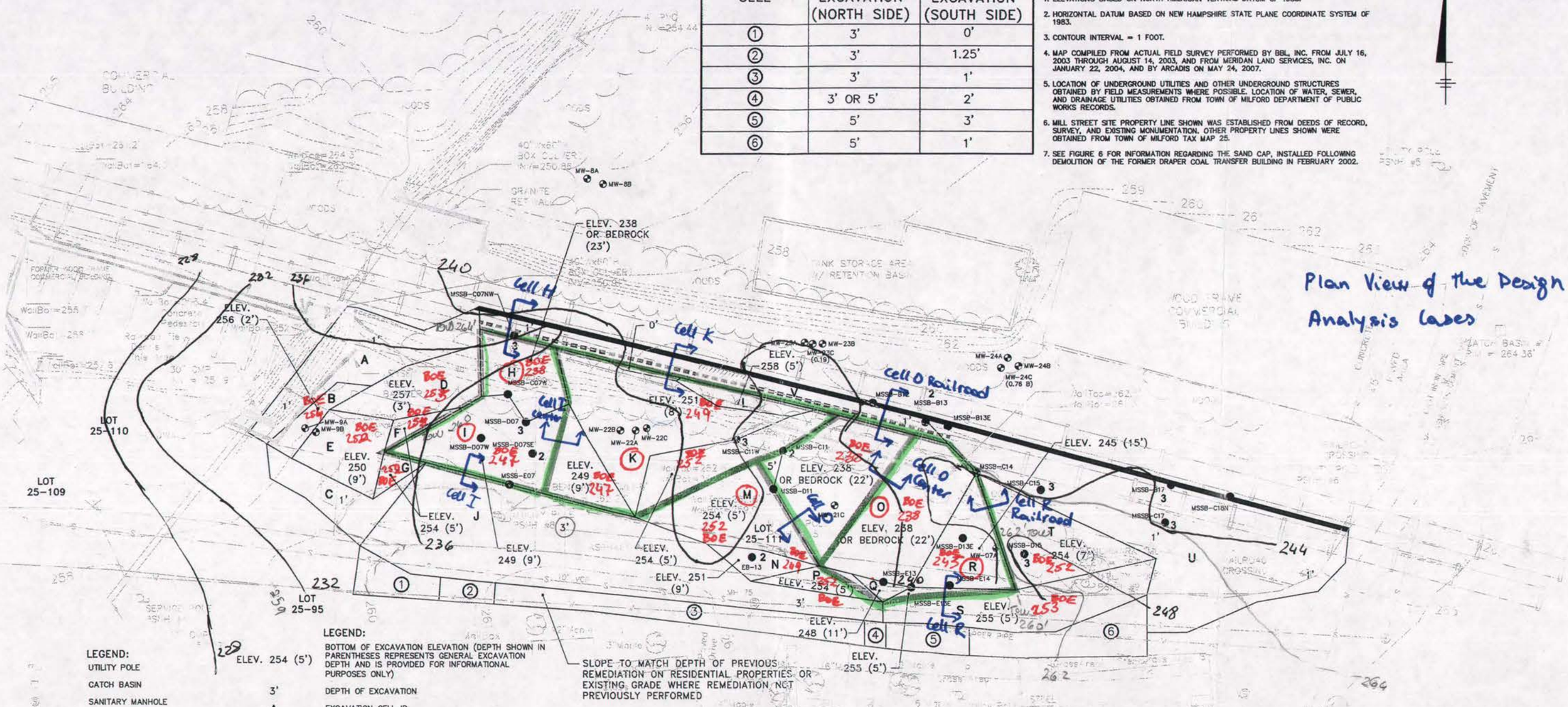

LEGEND:

- UTILITY POLE
- CATCH BASIN
- SANITARY MANHOLE
- WATER VALVE
- SURFACE ELEVATION CONTOUR
- EDGE OF TREES
- CHAIN LINK FENCE
- FIRE HYDRANT
- EXISTING MONITORING WELL
- ASPHALT APRON INSTALLED DURING REMEDIAL ACTION PERFORMED IN 1995
- EXCAVATION LIMITS

LEGEND:

- ELEV. 254 (5') — BOTTOM OF EXCAVATION ELEVATION (DEPTH SHOWN IN PARENTHESES REPRESENTS GENERAL EXCAVATION DEPTH AND IS PROVIDED FOR INFORMATIONAL PURPOSES ONLY)
- 3' — DEPTH OF EXCAVATION
- A — EXCAVATION CELL ID
- APPROXIMATE LOCATION OF SOLDIER PILE AND TREMIE CONCRETE (SPTC) WALLS
- CONCRETE GUIDE WALL FOR SPTC WALL INSTALLATION (SHOWN ON OUTSIDE NORTHERN PERIMETER ONLY)
- ●2 — SOIL SAMPLING LOCATION AND NUMBER OF SAMPLES CONTAINING PCBs > 1ppm SCL AND NOT FULLY ADDRESSED BY LIMITS OF SOIL REMOVAL
- FOCUSED EXCAVATION
- INDICATES A 1 FOOT VERTICAL, 1.5 FOOT HORIZONTAL SLOPE
- PROPERTY LINE

SLOPE TO MATCH DEPTH OF PREVIOUS REMEDIATION ON RESIDENTIAL PROPERTIES OR EXISTING GRADE WHERE REMEDIATION NOT PREVIOUSLY PERFORMED

— 244 TOP OF BEDROCK EL

DRAFT
FOR EPA REVIEW

GENERAL ELECTRIC COMPANY
FLETCHER'S PAINT WORKS AND STORAGE FACILITY
SUPERFUND SITE - MILFORD, NEW HAMPSHIRE
INTERMEDIATE (60%) DESIGN REPORT

MILL STREET AREA - EXCAVATION LIMITS AND SPTC WALL CONFIGURATION

ARCADIS BBL
Infrastructure, environment, facilities

FIGURE
A-2

SYR-85-NEW LAF AMS ---CR ON=* OFF=REF
G:\CAD\GE-CAD\GE_ACTIVE\0\20985000\DESIGN\REPORT\APPENDIX\20985006.DWG SAVED: 6/12/2007 5:01 PM LAYOUT:A-2 PAGESETUP:DL28-7350N2-SYR PENTABLE:PLTFULL.CTB PRINTED: 6/12/2007 5:01 PM BY:ASCHILLING
PROJECTNAME
PROJECTNO: 20985001
IMAGES: 20985X00

DESIGN CASE CELL H

HALEY & ALDRICH	CALCULATIONS	File No.	32608-003
		Sheet	7 of 83
Client	Arcadis BBL	Date	10/18/07
Project	Fletcher's Paint Work Superfund Site	Computed By	BV
Subject	Mill Street Design Case	Checked By	DRS

Cell H

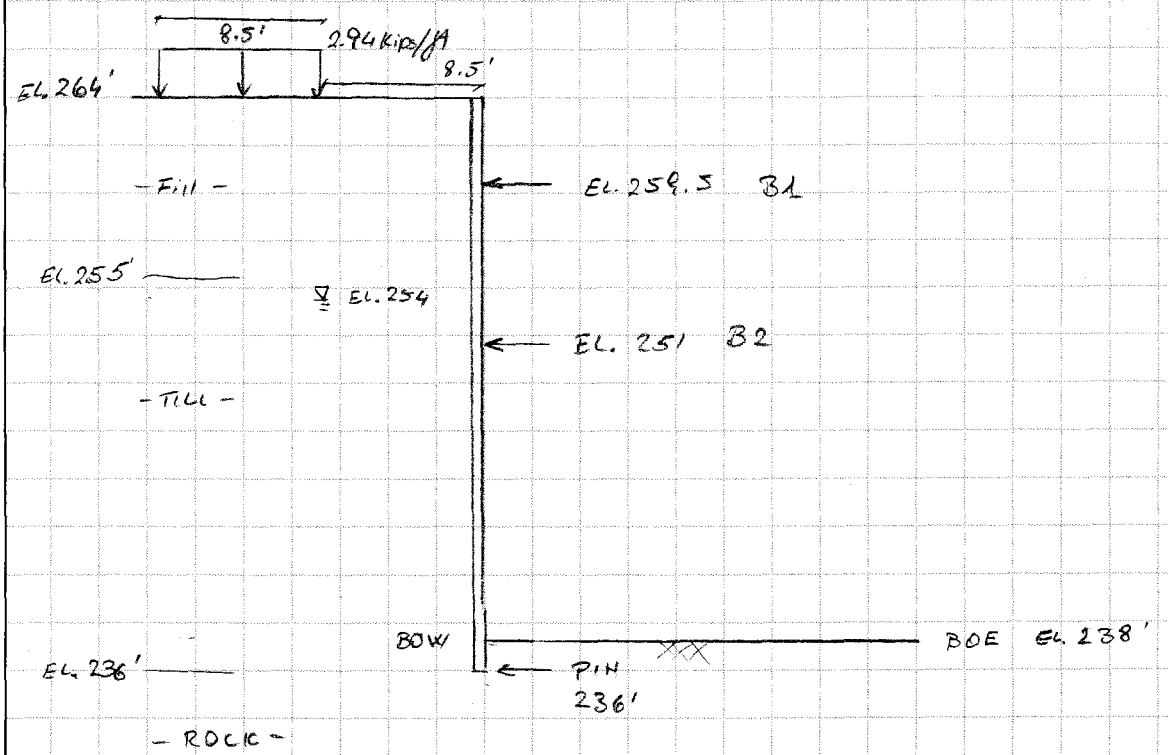

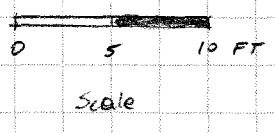

Train loading & 5' spacing (see appendix D for train loading calculation)

Soil Properties:

Fill: $\gamma = 120$ pcf $\phi = 30°$

Till: $\gamma = 125$ pcf $\phi = 36°$

see appendix D for soil properties

HALEY & ALDRICH, Inc.
Program: WALLAP Version 5.04 Revision A26.B38.R33
Licensed from GEOSOLVE
Run ID. 2007-1015-Cell H
GE Fletcher
Cell H

| Sheet No.
| Job No. 32608
| Made by : BV
| Date:28-12-2007
| Checked :

Units: lb,ft

INPUT DATA

SOIL PROFILE

Stratum no.	Elevation of top of stratum	Soil types: Active side	Soil types: Passive side
1	264.00	1 Fill	1 Fill
2	255.00	2 Glacial	2 Glacial

Soil Profile see appendix D for soil Property

SOIL PROPERTIES

-- Soil type -- No.	Description (Datum elev.)	Bulk density lb/ft3	Young's Modulus Eh,lb/ft2 (dEh/dy)	At rest coeff. Ko (dKo/dy)	Consol state. NC/OC (Nu)	Active limit Ka (Kac)	Passive limit Kp (Kpc)	Cohesion lb/ft2 (dc/dy)
1	Fill	120.0	0	0.500	NC	0.333	3.000	
			(60000)		(0.250)	(0.000)	(0.000)	
2	Glacial	125.0	120000	0.500	OC	0.260	5.000	
					(0.250)	(0.000)	(0.000)	

Additional soil parameters associated with Ka and Kp

------- Soil type ------- No.	Description	--- parameters for Ka --- Soil friction angle	Wall adhesion coeff.	Back-fill angle	--- parameters for Kp --- Soil friction angle	Wall adhesion coeff.	Back-fill angle
1	Fill	30.03	0.000	0.00	30.00	0.000	0.00
2	Glacial	35.97	0.000	0.00	41.81	0.000	0.00

GROUND WATER CONDITIONS

Density of water = 62.40 lb/ft3

	Active side	Passive side
Initial water table elevation	254.00	254.00

Automatic water pressure balancing at toe of wall : No

Water press. profile no.	Active side: Point no.	Elev. ft	Piezo elev. ft	Water press. lb/ft2	Passive side: Point no.	Elev. ft	Piezo elev. ft	Water press. lb/ft2
1	1	254.00	254.00	0.0	1	249.00	249.00	0.0
2	1	254.00	254.00	0.0	1	238.00	238.00	0.0

→ Lowering of water table during excavation.

WALL PROPERTIES

Elevation of toe of wall = 235.50
Maximum finite element length = 1.60
Youngs modulus of wall E = 4.1700E+09 lb/ft2
Moment of inertia of wall I = 0.017650 ft4/ft run
E.I = 7.3601E+07 lb.ft2/ft run

$I_{W26\times68} = 1830\ in^4 = 0.088\ ft^4$
5' spacing
$I = \frac{0.088}{5} = 0.0176\ ft^4/ft$ wall

STRUTS and ANCHORS

Strut/ anchor no.	Elev.	Strut spacing ft	X-section area of strut sq.ft	Youngs modulus lb/ft2	Free length ft	Inclin -ation (degs)	Pre-stress /strut lb	Tension allowed
1	236.00	5.00	0.010300	4.176E+09	0.10	0.00	0	No
2	259.50	20.00	0.180000	4.176E+09	15.00	0.00	0	No
3	251.00	20.00	0.180000	4.176E+09	15.00	0.00	0	No

↑ Area of pipe 18" Diameter

9 of 83

SURCHARGE LOADS

Surcharge no.	Elev.	Distance from wall	Length parallel to wall	Width perpend. to wall	Surcharge ----- lb/ft2 ----- Near edge	Far edge	Equiv. soil type
1	264.00	8.25(A)	100.00	8.50	2940.00	=	N/A

Note: A = Active side, P = Passive side

CONSTRUCTION STAGES

Construction sequence

Construction stage no.	Stage description
1	Apply surcharge no.1 at elevation 264.00
2	Install strut or anchor no.1 at elevation 236.00
3	Excavate to elevation 257.50 on PASSIVE side
4	Install strut or anchor no.2 at elevation 259.50
5	Apply water pressure profile no.1 No analysis at this stage
6	Excavate to elevation 249.00 on PASSIVE side
7	Install strut or anchor no.3 at elevation 251.00
8	Apply water pressure profile no.2 No analysis at this stage
9	Excavate to elevation 238.00 on PASSIVE side

FACTORS OF SAFETY and ANALYSIS OPTIONS

Type of structure - Retaining wall

Stability analysis:
Method of analysis - Strength Factor method
Factor on soil strength for calculating wall depth = 1.20
Factor on soil strength for calculating tie force = 1.00

Parameters for undrained strata:
Minimum equivalent fluid density = 0.00 lb/ft3
Maximum depth of water filled tension crack = 0.00 ft

Bending moment and displacement calculation:
Method - Subgrade reaction model using Influence Coefficients
Open Tension Crack analysis? - No
Non-linear Modulus Parameter (L) = 0 ft

Boundary conditions:
Length of wall (normal to plane of analysis) = 1000.00 ft

Width of excavation on active side of wall = 20.00 ft
Width of excavation on passive side of wall = 20.00 ft

Distance to rigid boundary on active side = 20.00 ft
Distance to rigid boundary on passive side = 20.00 ft

OUTPUT OPTIONS

Results to be stored on disk? - Yes
Results to be output on the printer? - No

Stage no.	Stage description	Output options: Displacement Bending mom. Shear force	Active, Passive pressures	Graph. output
1	Apply surcharge no.1 at elev. 264.00	Yes	Yes	Yes
2	Install strut no.1 at elev. 236.00	Yes	Yes	Yes
3	Excav. to elev. 257.50 on PASSIVE side	Yes	Yes	Yes
4	Install strut no.2 at elev. 259.50	Yes	Yes	Yes
5	Apply water pressure profile no.1	No	No	No
6	Excav. to elev. 249.00 on PASSIVE side	Yes	Yes	Yes
7	Install strut no.3 at elev. 251.00	Yes	Yes	Yes
8	Apply water pressure profile no.2	No	No	No
9	Excav. to elev. 238.00 on PASSIVE side	Yes	Yes	Yes
*	Summary output	Yes	-	Yes

Program WALLAP - Copyright (C) 2007 by DL Borin, distributed by GEOSOLVE
69 Rodenhurst Road, London SW4, UK. Tel: +44 20 8674 7251

HALEY & ALDRICH, Inc.
Program: WALLAP Version 5.04 Revision A26.B38.R33
Licensed from GEOSOLVE
Run ID. 2007-1015-Cell H
GE Fletcher
Cell H

| Sheet No.
| Job No. 32608
| Made by : BV
| Date:28-12-2007
| Checked :

Units: lb,ft

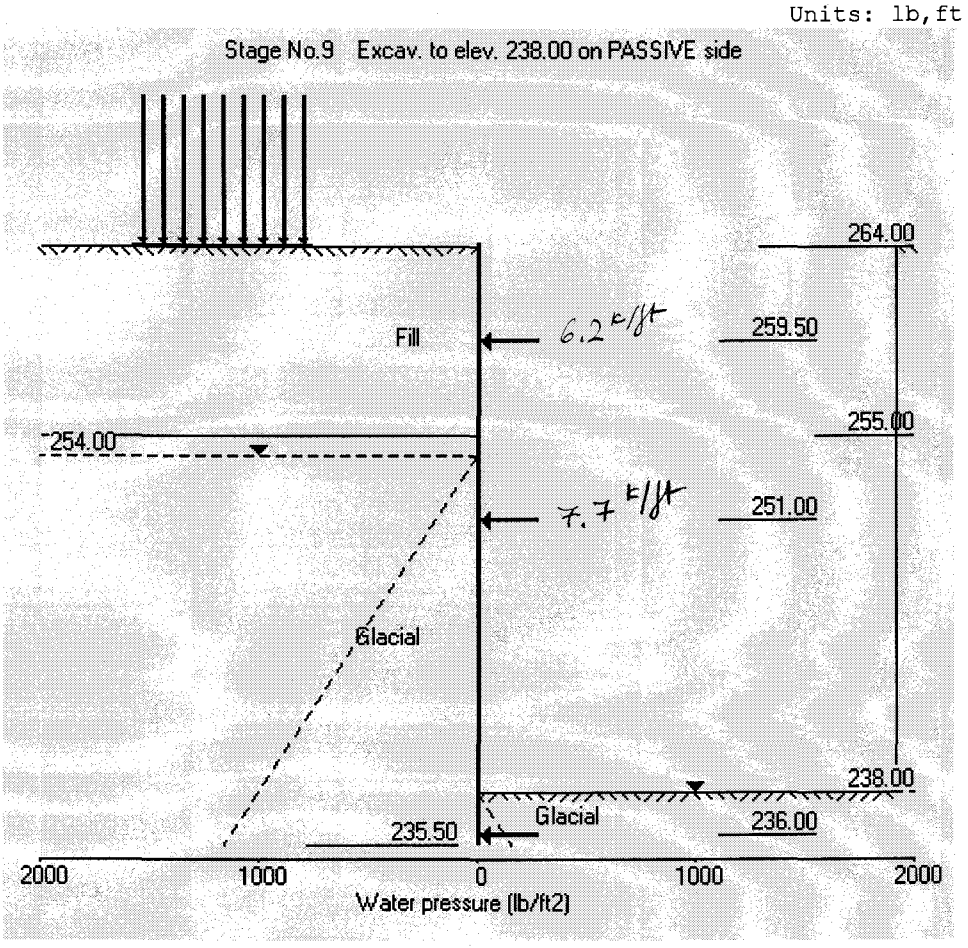

HALEY & ALDRICH, Inc.
Program: WALLAP Version 5.04 Revision A26.B38.R33
Licensed from GEOSOLVE
Run ID. 2007-1015-Cell H
GE Fletcher
Cell H

| Sheet No.
| Job No. 32608
| Made by : BV
| Date:28-12-2007
| Checked :

Units: lb,ft

Summary of results

STABILITY ANALYSIS according to Strength Factor method
Factor of safety on soil strength

Stage No.	--- G.L. --- Act.	Pass.	Strut Elev.	FoS for toe elev. = 235.50: Factor of Safety	Moment equilib. at elev.	Toe elev. for FoS = 1.200: Toe elev.	Wall Penetr -ation	Strut force for F=1.000: Strut force lb/ft run
1	264.00	264.00	Cant.		Conditions unsuitable for FoS calc.			
2	264.00	264.00			No analysis at this stage			
3	264.00	257.50	236.00		Conditions unsuitable for FoS calc.			
4	264.00	257.50			No analysis at this stage			

All remaining stages have more than one strut - FoS calculation n/a

HALEY & ALDRICH, Inc.
Program: WALLAP Version 5.04 Revision A26.B38.R33
Licensed from GEOSOLVE
Run ID. 2007-1015-Cell H
GE Fletcher
Cell H

| Sheet No.
| Job No. 32608
| Made by : BV
| Date:28-12-2007
| Checked :

Units: lb,ft

Summary of results

BENDING MOMENT and DISPLACEMENT CALCULATION - Assumptions:
Subgrade reaction model - Boussinesq Influence coefficients
Soil deformations are elastic until the active or passive limit is reached
Open Tension Crack analysis - No
Length of wall perpendicular to section = 1000.00ft

Rigid boundaries: Active side 20.00 from wall
Passive side 20.00 from wall

Bending moment, shear force and displacement envelopes

Node no.	Y coord	Displacement maximum ft	Displacement minimum ft	Bending moment maximum lb.ft/ft	Bending moment minimum lb.ft/ft	Shear force maximum lb/ft	Shear force minimum lb/ft
1	264.00	0.053	-0.002	0.0	-0.0	0.0	0.0
2	262.40	0.050	-0.000	17.4	0.0	223.8	0.0
3	260.95	0.047	0.000	678.3	0.0	638.7	0.0
4	259.50	0.047	0.000	1962.6	0.0	1028.8	-5263.9
5	258.50	0.049	0.000	1271.0	-3295.3	711.0	-5010.4
6	257.50	0.051	0.000	2148.3	-8139.4	1029.7	-4691.7
7	256.25	0.053	0.000	3644.9	-13677.2	1240.8	-4199.2
8	255.00	0.055	0.000	5124.4	-18528.3	991.8	-3603.1
9	254.00	0.056	0.000	5953.1	-21923.4	672.7	-3173.4
10	252.50	0.058	0.000	6721.0	-26020.5	229.2	-2385.1
11	251.00	0.060	0.000	6760.3	-28897.7	75.9	-7668.9
12	250.00	0.060	0.000	6532.5	-29911.8	0.0	-6892.9
13	249.00	0.061	0.000	6148.8	-30128.5	249.9	-6029.9
14	247.70	0.061	0.000	5477.2	-37182.0	1180.9	-4781.0
15	246.40	0.060	0.000	4685.0	-42519.4	1612.4	-3391.8
16	244.80	0.057	0.000	3632.5	-46241.3	1753.7	-1493.5
17	243.20	0.053	0.000	2593.7	-47020.1	1896.2	-617.7
18	241.60	0.047	0.000	1650.3	-44217.5	2958.5	-535.9
19	240.00	0.040	0.000	871.1	-37455.6	5632.6	-414.3
20	239.00	0.035	0.000	499.4	-30925.0	7487.2	-320.1
21	238.00	0.029	0.000	228.5	-22467.8	9488.6	-213.0
22	237.00	0.023	0.000	70.9	-11997.7	11452.1	-93.5
23	236.00	0.017	0.000	329.0	-9.4	13206.1	-1072.0
24	235.50	0.017	0.000	0.0	-0.0	0.0	0.0

Maximum and minimum bending moment and shear force at each stage

Stage no.	Bending moment maximum lb.ft/ft	elev.	Bending moment minimum lb.ft/ft	elev.	Shear force maximum lb/ft	elev.	Shear force minimum lb/ft	elev.
1	158.3	258.50	-1910.6	247.70	223.7	241.60	-451.6	255.00
2	No calculation at this stage							
3	6760.3	251.00	-0.0	235.50	1240.8	256.25	-652.7	244.80
4	No calculation at this stage							
5	No calculation at this stage							
6	1837.2	259.50	-30106.0	249.00	4846.9	236.00	-5263.9	259.50
7	No calculation at this stage							
8	No calculation at this stage							
9	1962.6	259.50	-47020.1	243.20	13206.1	236.00	-7668.9	251.00

↳ Maximum moment

Used to size W24x68

Run ID. 2007-1015-Cell H | Sheet No.
GE Fletcher | Date:28-12-2007
Cell H | Checked :

Summary of results (continued)

Maximum and minimum displacement at each stage

Stage no.	Displacement maximum ft	elev.	minimum ft	elev.	Stage description
1	0.017	235.50	-0.002	264.00	Apply surcharge no.1 at elev. 264.00
2	No calculation at this stage				Install strut no.1 at elev. 236.00
3	0.053	264.00	0.000	264.00	Excav. to elev. 257.50 on PASSIVE side
4	No calculation at this stage				Install strut no.2 at elev. 259.50
5	No calculation at this stage				Apply water pressure profile no.1
6	0.057	251.00	0.000	264.00	Excav. to elev. 249.00 on PASSIVE side
7	No calculation at this stage				Install strut no.3 at elev. 251.00
8	No calculation at this stage				Apply water pressure profile no.2
9	0.061	249.00	0.000	264.00	Excav. to elev. 238.00 on PASSIVE side

Strut forces at each stage (horizontal components)

Stage no.	Strut no. 1 at elev. 236.00 lb/ft run	lb/strut	Strut no. 2 at elev. 259.50 lb/ft run	lb/strut	Strut no. 3 at elev. 251.00 lb/ft run	lb/strut
3	149.8	748.9	---	---	---	---
6	5368.5	26842.7	6214.6	124292.5	---	---
9	14278.1	71390.4	4869.5	97389.1	7744.7	154894.6

Pin Force

upper strut uniform Load

lower strut uniform Load

HALEY & ALDRICH, Inc. | Sheet No.
Program: WALLAP Version 5.04 Revision A26.B38.R33 |
Licensed from GEOSOLVE | Job No. 32608
Run ID. 2007-1015-Cell H | Made by : BV
GE Fletcher | Date:28-12-2007
Cell H | Checked :

Units: lb,ft

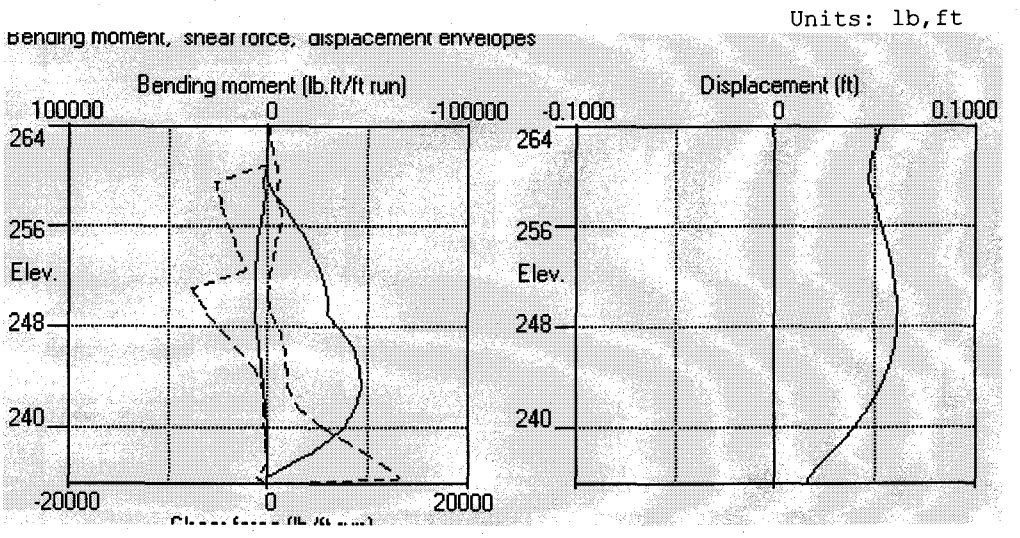

DESIGN CASE CELL I

HALEY & ALDRICH	CALCULATIONS	File No. 32608-003
		Sheet 14 of 83
Client: Arcadis BBL		Date: 10/18/07
Project: Fletcher's Point Work Superfund Site		Computed By: BV
Subject: Mill Street Design Case		Checked By: DRS

Cell I

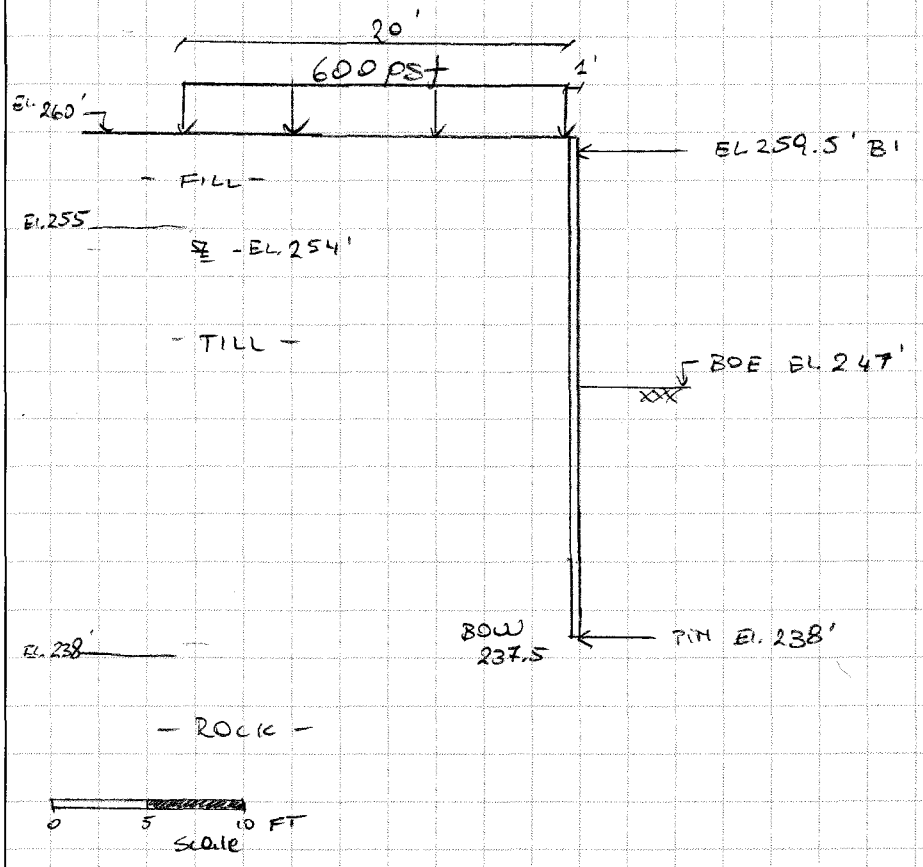

600 psf construction surcharge

6' Spacing S = 0.147 ft²/ft

Cell I center wall

Same bracing layout as above, with only fill on active side from 260'- 247'

Soil properties as previous case

HALEY & ALDRICH, Inc.
Program: WALLAP Version 5.04 Revision A26.B38.R33
Licensed from GEOSOLVE
Run ID. 2007-1015-Cell I
GE Fletcher
Cell I

Sheet No.
Job No. 32608
Made by : BV
Date:28-12-2007
Checked :

Units: lb,ft

INPUT DATA

SOIL PROFILE

Stratum no.	Elevation of top of stratum	Soil types: Active side	Soil types: Passive side
1	260.00	1 Fill	1 Fill
2	255.00	2 Glacial	2 Glacial

SOIL PROPERTIES

-- Soil type -- No.	Description (Datum elev.)	Bulk density lb/ft3	Young's Modulus Eh,lb/ft2 (dEh/dy)	At rest coeff. Ko (dKo/dy)	Consol state. NC/OC (Nu)	Active limit Ka (Kac)	Passive limit Kp (Kpc)	Cohesion lb/ft2 (dc/dy)
1	Fill	120.0	0	0.500	NC	0.333	3.000	
			(60000)		(0.250)	(0.000)	(0.000)	
2	Glacial	125.0	120000	0.500	OC	0.260	5.000	
					(0.250)	(0.000)	(0.000)	

Additional soil parameters associated with Ka and Kp

------- Soil type ------- No.	Description	--- parameters for Ka --- Soil friction angle	Wall adhesion coeff.	Back-fill angle	--- parameters for Kp --- Soil friction angle	Wall adhesion coeff.	Back-fill angle
1	Fill	30.03	0.000	0.00	30.00	0.000	0.00
2	Glacial	35.97	0.000	0.00	41.81	0.000	0.00

GROUND WATER CONDITIONS

Density of water = 62.40 lb/ft3

	Active side	Passive side
Initial water table elevation	254.00	254.00

Automatic water pressure balancing at toe of wall : No

Water press. profile no.	Active side: Point no.	Elev. ft	Piezo elev. ft	Water press. lb/ft2	Passive side: Point no.	Elev. ft	Piezo elev. ft	Water press. lb/ft2
1	1	254.00	254.00	0.0	1	247.00	247.00	0.0

WALL PROPERTIES

Elevation of toe of wall = 237.50
Maximum finite element length = 1.20
Youngs modulus of wall E = 4.1700E+09 lb/ft2
Moment of inertia of wall I = 0.014700 ft4/ft run
E.I = 6.1299E+07 lb.ft2/ft run

6' spacing
$I_{W24\times68} = \frac{0.088}{6'} = 0.0147 \frac{ft^4}{ft\ wall}$

STRUTS and ANCHORS

Strut/ anchor no.	Elev.	Strut spacing ft	X-section area of strut sq.ft	Youngs modulus lb/ft2	Free length ft	Inclin -ation (degs)	Pre-stress /strut lb	Tension allowed
1	259.50	20.00	0.100000	4.176E+09	15.00	0.00	0	No
2	238.00	5.00	0.018000	4.176E+09	0.10	0.00	0	No

SURCHARGE LOADS

Surcharge no.	Elev.	Distance from wall	Length parallel to wall	Width perpend. to wall	Surcharge ----- lb/ft2 ----- Near edge	Far edge	Equiv. soil type
1	260.00	1.00(A)	30.00	20.00	600.00	=	N/A

Note: A = Active side, P = Passive side

CONSTRUCTION STAGES

Construction stage no.	Stage description
1	Apply surcharge no.1 at elevation 260.00
2	Install strut or anchor no.2 at elevation 238.00
3	Excavate to elevation 257.50 on PASSIVE side
4	Install strut or anchor no.1 at elevation 259.50
5	Apply water pressure profile no.1 No analysis at this stage
6	Excavate to elevation 247.00 on PASSIVE side

FACTORS OF SAFETY and ANALYSIS OPTIONS

Type of structure - Retaining wall

Stability analysis:
Method of analysis - Strength Factor method
Factor on soil strength for calculating wall depth = 1.00
Factor on soil strength for calculating tie force = 1.00

Parameters for undrained strata:
Minimum equivalent fluid density = 0.00 lb/ft3
Maximum depth of water filled tension crack = 0.00 ft

Bending moment and displacement calculation:
Method - Subgrade reaction model using Influence Coefficients
Open Tension Crack analysis? - No
Non-linear Modulus Parameter (L) = 0 ft

Boundary conditions:
Length of wall (normal to plane of analysis) = 1000.00 ft

Width of excavation on active side of wall = 20.00 ft
Width of excavation on passive side of wall = 20.00 ft

Distance to rigid boundary on active side = 20.00 ft
Distance to rigid boundary on passive side = 20.00 ft

OUTPUT OPTIONS

Results to be stored on disk? - Yes
Results to be output on the printer? - No

Stage no.	Stage description	Output options: Displacement Bending mom. Shear force	Active, Passive pressures	Graph. output
1	Apply surcharge no.1 at elev. 260.00	Yes	Yes	Yes
2	Install strut no.2 at elev. 238.00	No	No	No
3	Excav. to elev. 257.50 on PASSIVE side	Yes	Yes	Yes
4	Install strut no.1 at elev. 259.50	No	No	No
5	Apply water pressure profile no.1	No	No	No
6	Excav. to elev. 247.00 on PASSIVE side	Yes	Yes	Yes
*	Summary output	Yes	-	Yes

Program WALLAP - Copyright (C) 2007 by DL Borin, distributed by GEOSOLVE
69 Rodenhurst Road, London SW4, UK. Tel: +44 20 8674 7251

HALEY & ALDRICH, Inc.
Program: WALLAP Version 5.04 Revision A26.B38.R33
Licensed from GEOSOLVE
Run ID. 2007-1015-Cell I
GE Fletcher
Cell I

| Sheet No.
| Job No. 32608
| Made by : BV
| Date:28-12-2007
| Checked :

Units: lb,ft

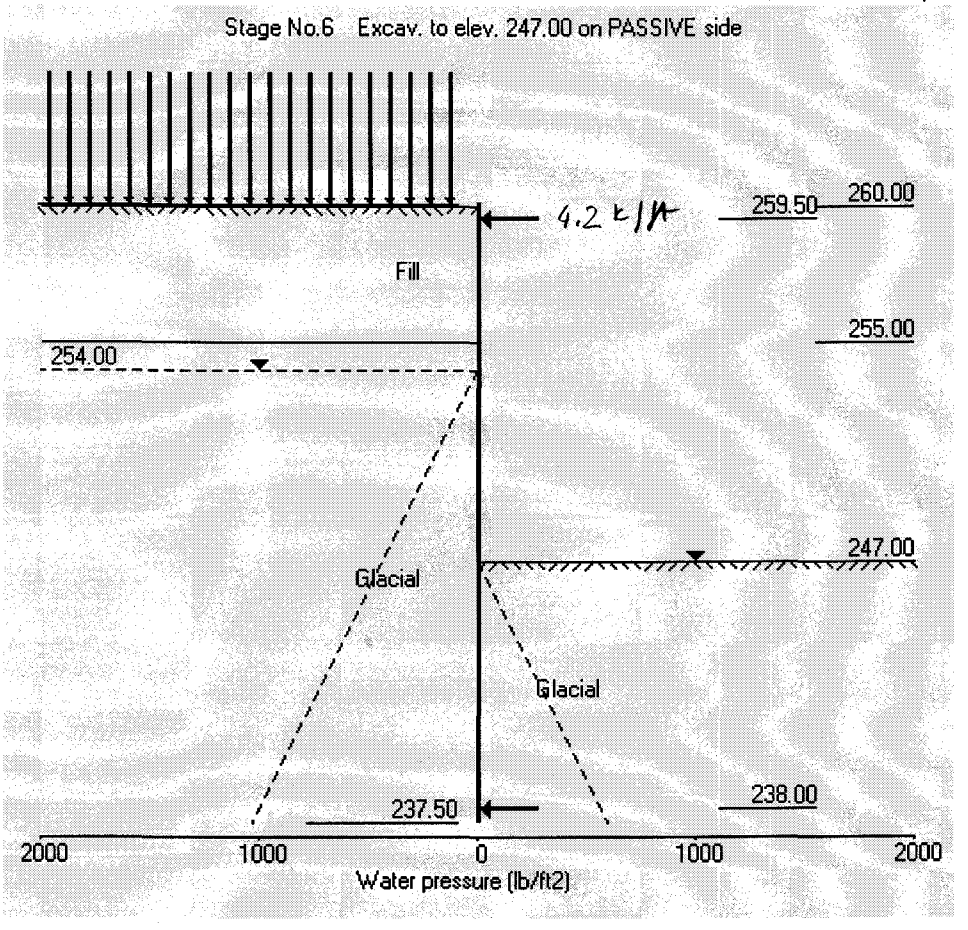

HALEY & ALDRICH, Inc.
Program: WALLAP Version 5.04 Revision A26.B38.R33
Licensed from GEOSOLVE
Run ID. 2007-1015-Cell I
GE Fletcher
Cell I

| Sheet No.
| Job No. 32608
| Made by : BV
| Date:28-12-2007
| Checked :

Units: lb,ft

Summary of results

STABILITY ANALYSIS according to Strength Factor method
Factor of safety on soil strength

Stage No.	--- G.L. --- Act.	Pass.	Strut Elev.	FoS for toe elev. = 237.50: Factor of Safety	Moment equilib. at elev.	Toe elev. for FoS = 1.000: Toe elev.	Wall Penetr -ation	Strut force for F=1.000: Strut force lb/ft run
1	260.00	260.00	Cant.		Conditions unsuitable for FoS calc.			
2	260.00	260.00			No analysis at this stage			
3	260.00	257.50	238.00		Conditions unsuitable for FoS calc.			
4	260.00	257.50			No analysis at this stage			

All remaining stages have more than one strut - FoS calculation n/a

HALEY & ALDRICH, Inc.
Program: WALLAP Version 5.04 Revision A26.B38.R33
Licensed from GEOSOLVE
Run ID. 2007-1015-Cell I
GE Fletcher
Cell I

| Sheet No.
| Job No. 32608
| Made by : BV
| Date:28-12-2007
| Checked :

Units: lb,ft

Summary of results

BENDING MOMENT and DISPLACEMENT CALCULATION - Assumptions:
Subgrade reaction model - Boussinesq Influence coefficients
Soil deformations are elastic until the active or passive limit is reached
Open Tension Crack analysis - No
Length of wall perpendicular to section = 1000.00ft

Rigid boundaries: Active side 20.00 from wall
Passive side 20.00 from wall

Bending moment, shear force and displacement envelopes

Node no.	Y coord	Displacement maximum ft	Displacement minimum ft	Bending moment maximum lb.ft/ft	Bending moment minimum lb.ft/ft	Shear force maximum lb/ft	Shear force minimum lb/ft
1	260.00	0.021	0.000	0.0	-0.0	0.0	0.0
2	259.50	0.023	0.000	1.8	-0.1	7.0	-4179.0
3	258.50	0.025	0.000	52.7	-4133.3	84.1	-4101.8
4	257.50	0.028	0.000	224.2	-8147.7	250.7	-3935.3
5	256.88	0.029	0.000	412.0	-10561.5	322.4	-3793.2
6	256.25	0.030	0.000	621.5	-12873.8	316.2	-3627.3
7	255.63	0.032	0.000	811.9	-15078.5	271.1	-3440.0
8	255.00	0.033	0.000	962.3	-17160.0	189.0	-3232.8
9	254.00	0.035	0.000	1098.2	-20253.9	91.8	-2943.5
10	253.00	0.036	0.000	1147.4	-23032.6	14.7	-2595.1
11	252.00	0.037	0.000	1128.3	-25422.5	0.0	-2166.5
12	250.80	0.038	0.000	1036.3	-27666.7	0.0	-1548.0
13	249.60	0.038	0.000	892.6	-29101.1 max.	0.0	-817.4
14	248.40	0.037	0.000	717.1	$\boxed{-29592.2}$	23.9	-151.2
15	247.70	0.036	0.000	608.6	-29388.9	565.4	-155.9
16	247.00	0.035	0.000	498.3	-28793.4	1144.2	-156.3
17	245.90	0.033	0.000	326.6	-27088.0	1901.2	-149.2
18	244.80	0.031	0.000	167.8	-24637.3	2317.3	-133.1
19	243.60	0.028	0.000	19.8	-21689.8	2643.4	-106.0
20	242.40	0.024	0.000	0.0	-18296.3	3068.2	-69.5
21	241.20	0.020	0.000	0.0	-14329.8	3604.8	-23.7
22	240.00	0.015	0.000	0.0	-9648.8	4263.8	0.0
23	239.00	0.011	0.000	0.0	-5085.2	4911.9	0.0
24	238.00	0.007	0.000	172.2	-2.6	5652.6	-540.9
25	237.50	0.007	0.000	0.0	-0.0	0.0	-0.0

Maximum and minimum bending moment and shear force at each stage

Stage no.	Bending moment maximum lb.ft/ft	elev.	Bending moment minimum lb.ft/ft	elev.	Shear force maximum lb/ft	elev.	Shear force minimum lb/ft	elev.
1	3.3	258.50	-489.5	249.60	63.4	243.60	-130.0	255.00
2	No calculation at this stage							
3	1147.4	253.00	-150.4	241.20	322.4	256.88	-156.3	247.00
4	No calculation at this stage							
5	No calculation at this stage							
6	172.2	238.00	-29592.2	248.40	5652.6	238.00	-4179.0	259.50

18 of 83

Summary of results (continued)

Maximum and minimum displacement at each stage

Stage no.	Displacement maximum ft	elev.	minimum ft	elev.	Stage description
1	0.008	249.60	0.000	260.00	Apply surcharge no.1 at elev. 260.00
2	No calculation at this stage				Install strut no.2 at elev. 238.00
3	0.020	260.00	0.000	260.00	Excav. to elev. 257.50 on PASSIVE side
4	No calculation at this stage				Install strut no.1 at elev. 259.50
5	No calculation at this stage				Apply water pressure profile no.1
6	0.038	249.60	0.000	260.00	Excav. to elev. 247.00 on PASSIVE side

Strut forces at each stage (horizontal components)

Stage no.	Strut no. 1 at elev. 259.50 lb/ft run	lb/strut	Strut no. 2 at elev. 238.00 lb/ft run	lb/strut
3	---	---	192.9	964.3
6	4186.0	83719.5	6193.5	30967.3

Units: lb,ft

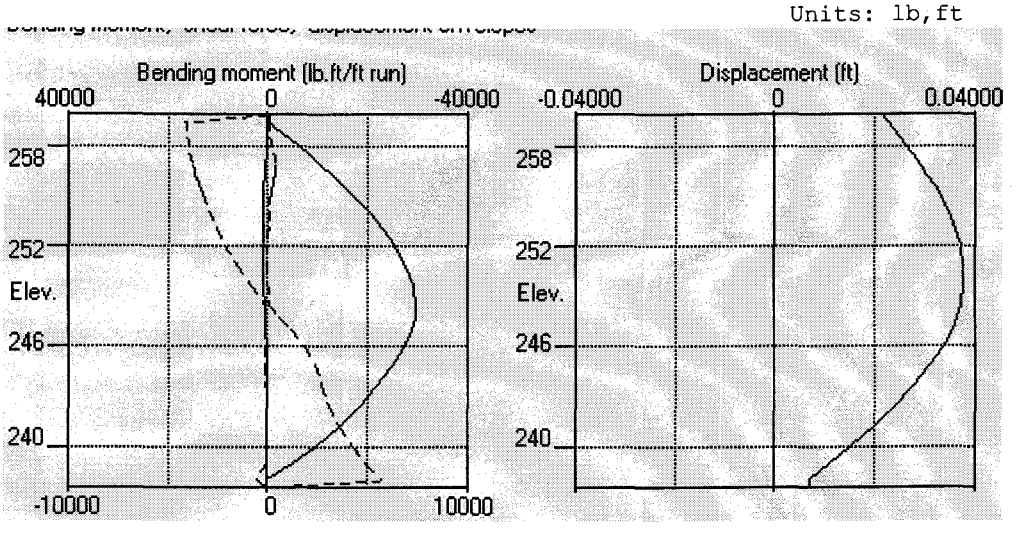

DESIGN CASE CELL K

HALEY & ALDRICH	CALCULATIONS	File No. 32608-003
		Sheet 20 of 83
Client: Arcadis BBL		Date: 10/18/97
Project: Fletcher's Paint Work Superfund Site		Computed By: BV
Subject: Mill Street Design Case		Checked By:

Cell K ~ Along Rail Road Tracks

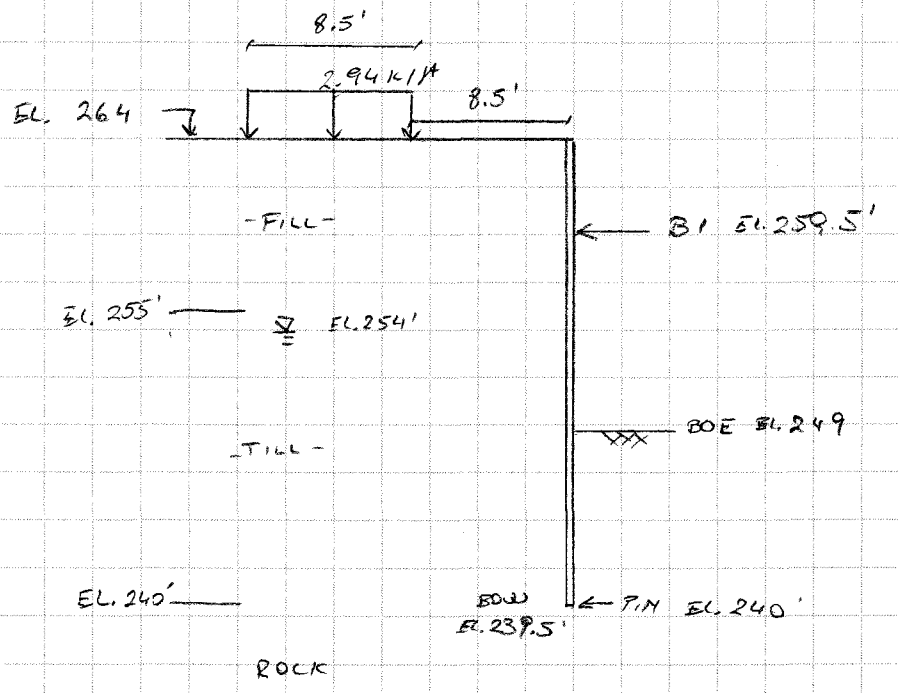

Rail road surcharge & 5' spacing

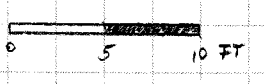

- cell K on south side was same loading & excavation sequence as cell I. Same soil properties

HALEY & ALDRICH, Inc.
Program: WALLAP Version 5.04 Revision A26.B38.R33
Licensed from GEOSOLVE
Run ID. 2007-1015-Cell K
GE Fletcher
Cell K

| Sheet No.
| Job No. 32608
| Made by : BV
| Date:28-12-2007
| Checked :

Units: lb,ft

INPUT DATA

SOIL PROFILE

Stratum no.	Elevation of top of stratum	Soil types: Active side	Soil types: Passive side
1	264.00	1 Fill	1 Fill
2	255.00	2 Glacial	2 Glacial

SOIL PROPERTIES

-- Soil type -- No.	Description (Datum elev.)	Bulk density lb/ft3	Young's Modulus Eh,lb/ft2 (dEh/dy)	At rest coeff. Ko (dKo/dy)	Consol state. NC/OC (Nu)	Active limit Ka (Kac)	Passive limit Kp (Kpc)	Cohesion lb/ft2 (dc/dy)
1	Fill	120.0	0	0.500	NC	0.333	3.000	
			(60000)		(0.250)	(0.000)	(0.000)	
2	Glacial	125.0	120000	0.500	OC	0.260	5.000	
					(0.250)	(0.000)	(0.000)	

Additional soil parameters associated with Ka and Kp

------- Soil type ------- No.	Description	--- parameters for Ka --- Soil friction angle	Wall adhesion coeff.	Back-fill angle	--- parameters for Kp --- Soil friction angle	Wall adhesion coeff.	Back-fill angle
1	Fill	30.03	0.000	0.00	30.00	0.000	0.00
2	Glacial	35.97	0.000	0.00	41.81	0.000	0.00

GROUND WATER CONDITIONS

Density of water = 62.40 lb/ft3

	Active side	Passive side
Initial water table elevation	254.00	254.00

Automatic water pressure balancing at toe of wall : No

Water press. profile no.	Active side: Point no.	Elev. ft	Piezo elev. ft	Water press. lb/ft2	Passive side: Point no.	Elev. ft	Piezo elev. ft	Water press. lb/ft2
1	1	254.00	254.00	0.0	1	249.00	249.00	0.0

WALL PROPERTIES

Elevation of toe of wall = 239.50
Maximum finite element length = 1.20
Youngs modulus of wall E = 4.1700E+09 lb/ft2
Moment of inertia of wall I = 0.017650 ft4/ft run
E.I = 7.3601E+07 lb.ft2/ft run

STRUTS and ANCHORS

Strut/ anchor no.	Elev.	Strut spacing ft	X-section area of strut sq.ft	Youngs modulus lb/ft2	Free length ft	Inclin -ation (degs)	Pre-stress /strut lb	Tension allowed
1	259.50	20.00	0.100000	4.176E+09	25.00	0.00	0	No
2	240.00	6.00	0.010300	4.176E+09	0.10	0.00	0	No

SURCHARGE LOADS

Surcharge no.	Elev.	Distance from wall	Length parallel to wall	Width perpend. to wall	Surcharge ----- lb/ft2 ----- Near edge	Far edge	Equiv. soil type
1	264.00	8.25(A)	100.00	8.50	2940.00	=	N/A

Note: A = Active side, P = Passive side

CONSTRUCTION STAGES

Construction stage no.	Stage description
1	Apply surcharge no.1 at elevation 264.00
2	Install strut or anchor no.2 at elevation 240.00
3	Excavate to elevation 257.50 on PASSIVE side
4	Install strut or anchor no.1 at elevation 259.50
5	Apply water pressure profile no.1 No analysis at this stage
6	Excavate to elevation 249.00 on PASSIVE side

FACTORS OF SAFETY and ANALYSIS OPTIONS

Type of structure - Retaining wall

Stability analysis:
Method of analysis - Strength Factor method
Factor on soil strength for calculating wall depth = 1.00
Factor on soil strength for calculating tie force = 1.00

Parameters for undrained strata:
Minimum equivalent fluid density = 0.00 lb/ft3
Maximum depth of water filled tension crack = 0.00 ft

Bending moment and displacement calculation:
Method - Subgrade reaction model using Influence Coefficients
Open Tension Crack analysis? - No
Non-linear Modulus Parameter (L) = 0 ft

Boundary conditions:
Length of wall (normal to plane of analysis) = 1000.00 ft

Width of excavation on active side of wall = 20.00 ft
Width of excavation on passive side of wall = 20.00 ft

Distance to rigid boundary on active side = 20.00 ft
Distance to rigid boundary on passive side = 20.00 ft

OUTPUT OPTIONS

Results to be stored on disk? - Yes
Results to be output on the printer? - No

Stage no.	Stage description	Output options: Displacement, Bending mom., Shear force	Active, Passive pressures	Graph. output
1	Apply surcharge no.1 at elev. 264.00	Yes	Yes	Yes
2	Install strut no.2 at elev. 240.00	No	No	No
3	Excav. to elev. 257.50 on PASSIVE side	Yes	Yes	Yes
4	Install strut no.1 at elev. 259.50	No	No	No
5	Apply water pressure profile no.1	No	No	No
6	Excav. to elev. 249.00 on PASSIVE side	Yes	Yes	Yes
*	Summary output	Yes	-	Yes

Program WALLAP - Copyright (C) 2007 by DL Borin, distributed by GEOSOLVE
69 Rodenhurst Road, London SW4, UK. Tel: +44 20 8674 7251

HALEY & ALDRICH, Inc.
Program: WALLAP Version 5.04 Revision A26.B38.R33
Licensed from GEOSOLVE
Run ID. 2007-1015-Cell K
GE Fletcher
Cell K

| Sheet No.
| Job No. 32608
| Made by : BV
| Date:28-12-2007
| Checked :

Units: lb,ft

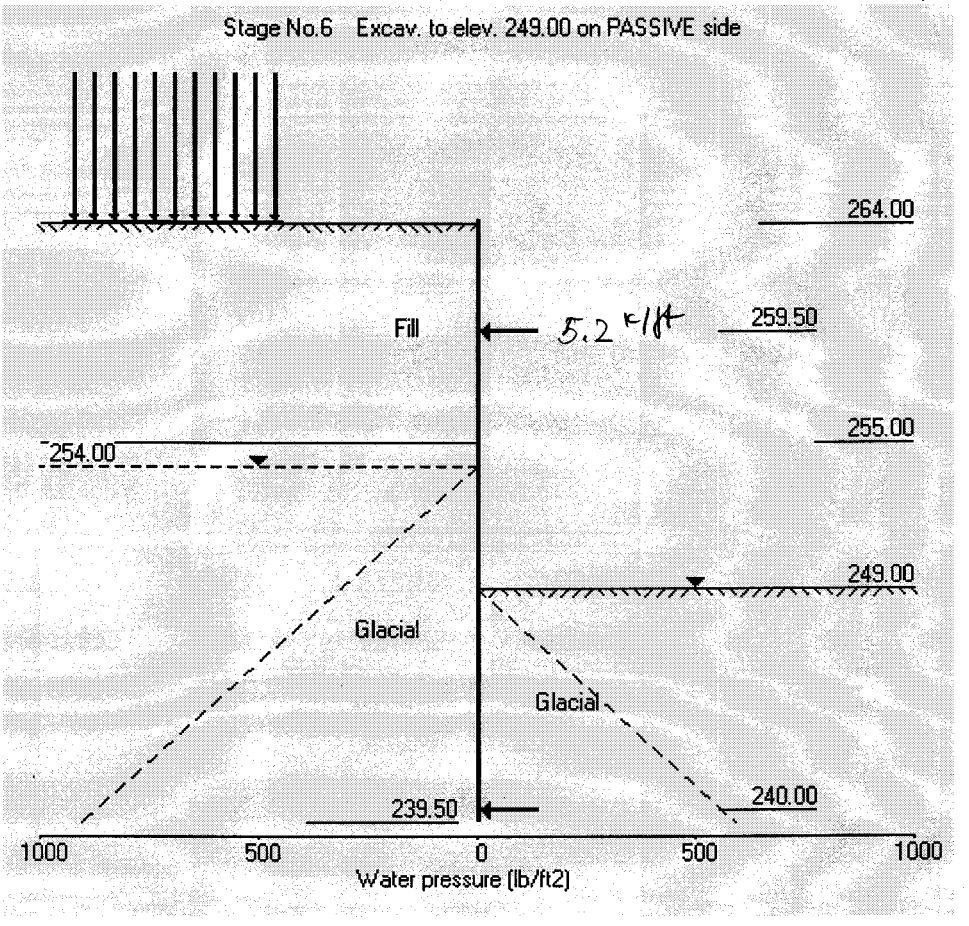

HALEY & ALDRICH, Inc.
Program: WALLAP Version 5.04 Revision A26.B38.R33
Licensed from GEOSOLVE
Run ID. 2007-1015-Cell K
GE Fletcher
Cell K

| Sheet No.
| Job No. 32608
| Made by : BV
| Date:28-12-2007
| Checked :

Units: lb,ft

Summary of results

STABILITY ANALYSIS according to Strength Factor method
Factor of safety on soil strength

Stage No.	--- G.L. --- Act.	Pass.	Strut Elev.	FoS for toe elev. = 239.50: Factor of Safety	Moment equilib. at elev.	Toe elev. for FoS = 1.000: Toe elev.	Wall Penetr -ation	Strut force for F=1.000: Strut force lb/ft run
1	264.00	264.00	Cant.		Conditions unsuitable for FoS calc.			
2	264.00	264.00			No analysis at this stage			
3	264.00	257.50	240.00		Conditions unsuitable for FoS calc.			
4	264.00	257.50			No analysis at this stage			

All remaining stages have more than one strut - FoS calculation n/a

HALEY & ALDRICH, Inc.
Program: WALLAP Version 5.04 Revision A26.B38.R33
Licensed from GEOSOLVE
Run ID. 2007-1015-Cell K
GE Fletcher
Cell K

| Sheet No.
| Job No. 32608
| Made by : BV
| Date:28-12-2007
| Checked :

Units: lb,ft

Summary of results

BENDING MOMENT and DISPLACEMENT CALCULATION - Assumptions:
Subgrade reaction model - Boussinesq Influence coefficients
Soil deformations are elastic until the active or passive limit is reached
Open Tension Crack analysis - No
Length of wall perpendicular to section = 1000.00ft

Rigid boundaries: Active side 20.00 from wall
Passive side 20.00 from wall

Bending moment, shear force and displacement envelopes

Node no.	Y coord	Displacement maximum ft	Displacement minimum ft	Bending moment maximum lb.ft/ft	Bending moment minimum lb.ft/ft	Shear force maximum lb/ft	Shear force minimum lb/ft
1	264.00	0.056	-0.002	0.0	0.0	0.0	0.0
2	262.80	0.053	-0.001	0.4	-0.0	58.5	0.0
3	261.60	0.052	-0.000	162.2	0.0	174.6	0.0
4	260.55	0.052	0.000	416.0	0.0	308.6	0.0
5	259.50	0.053	0.000	847.8	0.0	508.7	-4706.4
6	258.50	0.053	0.000	1232.1	-3727.1	702.7	-4452.9
7	257.50	0.053	0.000	2101.4	-8013.3	1021.4	-4134.1
8	256.88	0.053	0.000	2800.3	-10522.0	1184.2	-3901.0
9	256.25	0.053	0.000	3565.6	-12876.3	1232.6	-3641.7
10	255.63	0.053	0.000	4325.7	-15060.0	1166.0	-3356.3
11	255.00	0.053	0.000	5008.5	-17056.9	984.0	-3045.3
12	254.00	0.052	0.000	5813.6	-19894.8	635.4	-2615.6
13	253.00	0.052	0.000	6280.1	-22270.3	308.3	-2113.3
14	252.00	0.051	0.000	6481.0	-24050.2	13.1	-1517.5
15	250.80	0.049	0.000	6301.2	~~-25395.9~~ MAX	0.0	-682.5
16	249.90	0.048	0.000	5968.1	$\boxed{-25700.9}$	27.8	-444.0
17	249.00	0.046	0.000	5504.1	-25334.8	808.4	-569.9
18	248.10	0.044	0.000	4943.8	-24280.4	1505.8	-658.9
19	247.20	0.041	0.000	4319.1	-22680.1	1970.6	-714.1
20	246.00	0.038	0.000	3431.2	-20042.8	2312.4	-740.0
21	244.80	0.034	0.000	2542.8	-17137.6	2590.8	-716.4
22	243.60	0.029	0.000	1710.7	-13825.0	2995.8	-647.5
23	242.40	0.025	0.000	986.6	-9949.0	3533.5	-537.1
24	241.20	0.020	0.000	418.7	-5347.3	4207.9	-387.7
25	240.00	0.015	0.000	146.2	-8.7	5058.5	-491.5
26	239.50	0.016	0.000	0.0	-0.0	0.0	0.0

Maximum and minimum bending moment and shear force at each stage

Stage no.	Bending moment maximum lb.ft/ft	elev.	Bending moment minimum lb.ft/ft	elev.	Shear force maximum lb/ft	elev.	Shear force minimum lb/ft	elev.
1	383.8	257.50	-1003.2	249.00	152.1	243.60	-359.5	255.00
2	No calculation at this stage							
3	6481.0	252.00	-0.0	262.80	1232.6	256.25	-740.0	246.00
4	No calculation at this stage							
5	No calculation at this stage							
6	847.8	259.50	-25700.9	249.90	5058.5	240.00	-4706.4	259.50

Run ID. 2007-1015-Cell K | Sheet No.
GE Fletcher | Date:28-12-2007
Cell K | Checked :

Summary of results (continued)

Maximum and minimum displacement at each stage

Stage no.	Displacement maximum ft	elev.	minimum ft	elev.	Stage description
1	0.016	239.50	-0.002	264.00	Apply surcharge no.1 at elev. 264.00
2	No calculation at this stage				Install strut no.2 at elev. 240.00
3	0.056	264.00	0.000	264.00	Excav. to elev. 257.50 on PASSIVE side
4	No calculation at this stage				Install strut no.1 at elev. 259.50
5	No calculation at this stage				Apply water pressure profile no.1
6	0.053	256.88	0.000	264.00	Excav. to elev. 249.00 on PASSIVE side

Strut forces at each stage (horizontal components)

Stage no.	Strut no. 1 at elev. 259.50 lb/ft run	lb/strut	Strut no. 2 at elev. 240.00 lb/ft run	lb/strut
3	---	---	slack	slack
6	5215.1	104301.5	5550.1	33300.5

HALEY & ALDRICH, Inc. | Sheet No.
Program: WALLAP Version 5.04 Revision A26.B38.R33 |
Licensed from GEOSOLVE | Job No. 32608
Run ID. 2007-1015-Cell K | Made by : BV
GE Fletcher | Date:28-12-2007
Cell K | Checked :

Units: lb,ft

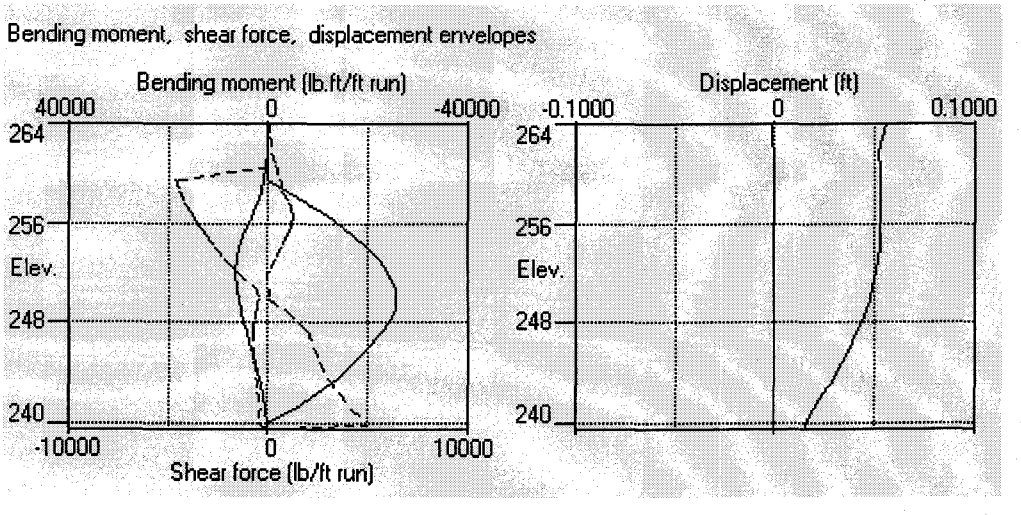

DESIGN CASE CELL O

HALEY & ALDRICH	CALCULATIONS	File No.	32608003
		Sheet	27 of 83
Client	Arcadis BBL	Date	10/18/07
Project	Fletcher's Paint Work Superfund Site	Computed By	BV
Subject	Mill Street Design Case	Checked By	

Cell D

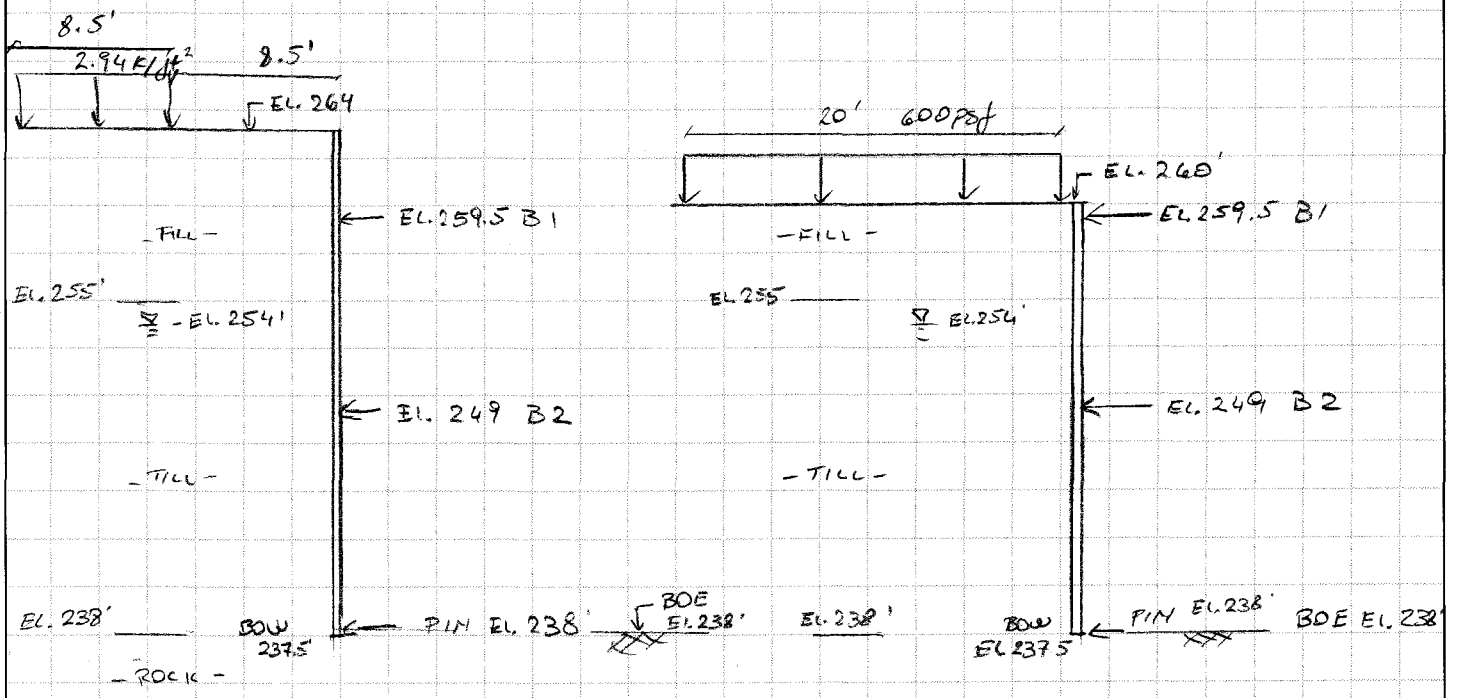

Cell D at Rail Road
5' Spacing

Cell D at South Side
6' Spacing

0 5 10 ft
Scale

Cell D Center wall has same profile as cell D at south side with soil profile on active side with Fill only.

HALEY & ALDRICH, Inc.
Program: WALLAP Version 5.04 Revision A26.B38.R33
Licensed from GEOSOLVE
Run ID. 2007-1015-Cell O
GE Fletcher
Cell O

| Sheet No. Cell O 28 of 83
| Job No. 32608
| Made by : BV
| Date:28-12-2007
| Checked :

Units: lb,ft

INPUT DATA

SOIL PROFILE

Stratum no.	Elevation of top of stratum	Soil types: Active side	Soil types: Passive side
1	260.00	1 Fill	1 Fill
2	255.00	2 Glacial	2 Glacial

SOIL PROPERTIES

-- Soil type -- No.	Description (Datum elev.)	Bulk density lb/ft3	Young's Modulus Eh,lb/ft2 (dEh/dy)	At rest coeff. Ko (dKo/dy)	Consol state. NC/OC (Nu)	Active limit Ka (Kac)	Passive limit Kp (Kpc)	Cohesion lb/ft2 (dc/dy)
1	Fill	120.0	0	0.500	NC	0.333	3.000	
			(60000)		(0.250)	(0.000)	(0.000)	
2	Glacial	125.0	120000	0.500	OC	0.260	5.000	
					(0.250)	(0.000)	(0.000)	

Additional soil parameters associated with Ka and Kp

------- Soil type ------- No.	Description	--- parameters for Ka --- Soil friction angle	Wall adhesion coeff.	Back-fill angle	--- parameters for Kp --- Soil friction angle	Wall adhesion coeff.	Back-fill angle
1	Fill	30.03	0.000	0.00	30.00	0.000	0.00
2	Glacial	35.97	0.000	0.00	41.81	0.000	0.00

GROUND WATER CONDITIONS

Density of water = 62.40 lb/ft3

	Active side	Passive side
Initial water table elevation	254.00	254.00

Automatic water pressure balancing at toe of wall : No

Water press. profile no.	Active side Point no.	Elev. ft	Piezo elev. ft	Water press. lb/ft2	Passive side Point no.	Elev. ft	Piezo elev. ft	Water press. lb/ft2
1	1	254.00	254.00	0.0	1	247.00	247.00	0.0
2	1	254.00	254.00	0.0	1	238.00	238.00	0.0

WALL PROPERTIES

Elevation of toe of wall = 237.50
Maximum finite element length = 1.60
Youngs modulus of wall E = 4.1700E+09 lb/ft2
Moment of inertia of wall I = 0.014700 ft4/ft run
E.I = 6.1299E+07 lb.ft2/ft run

STRUTS and ANCHORS

Strut/ anchor no.	Elev.	Strut spacing ft	X-section area of strut sq.ft	Youngs modulus lb/ft2	Free length ft	Inclin -ation (degs)	Pre-stress /strut lb	Tension allowed
1	259.50	20.00	0.180000	4.176E+09	25.00	0.00	0	No
2	238.00	6.00	0.030000	4.176E+09	0.10	0.00	0	No
3	249.00	20.00	0.180000	4.176E+09	25.00	0.00	0	No

SURCHARGE LOADS

Surcharge no.	Elev.	Distance from wall	Length parallel to wall	Width perpend. to wall	Surcharge ----- lb/ft2 ----- Near edge	Far edge	Equiv. soil type
1	260.00	1.00(A)	30.00	20.00	600.00	=	N/A

Note: A = Active side, P = Passive side

CONSTRUCTION STAGES

Construction stage no.	Stage description
1	Apply surcharge no.1 at elevation 260.00
2	Install strut or anchor no.2 at elevation 238.00
3	Excavate to elevation 257.50 on PASSIVE side
4	Install strut or anchor no.1 at elevation 259.50
5	Apply water pressure profile no.1 No analysis at this stage
6	Excavate to elevation 247.00 on PASSIVE side
7	Install strut or anchor no.3 at elevation 249.00
8	Apply water pressure profile no.2 No analysis at this stage
9	Excavate to elevation 238.00 on PASSIVE side

FACTORS OF SAFETY and ANALYSIS OPTIONS

Type of structure - Retaining wall

Stability analysis:
Method of analysis - Strength Factor method
Factor on soil strength for calculating wall depth = 1.00
Factor on soil strength for calculating tie force = 1.00

Parameters for undrained strata:
Minimum equivalent fluid density = 0.00 lb/ft3
Maximum depth of water filled tension crack = 0.00 ft

Bending moment and displacement calculation:
Method - Subgrade reaction model using Influence Coefficients
Open Tension Crack analysis? - No
Non-linear Modulus Parameter (L) = 0 ft

Boundary conditions:
Length of wall (normal to plane of analysis) = 1000.00 ft

Width of excavation on active side of wall = 20.00 ft
Width of excavation on passive side of wall = 20.00 ft

Distance to rigid boundary on active side = 20.00 ft
Distance to rigid boundary on passive side = 20.00 ft

OUTPUT OPTIONS

Results to be stored on disk? - Yes
Results to be output on the printer? - No

Stage no.	Stage description	Output options: Displacement Bending mom. Shear force	Active, Passive pressures	Graph. output
1	Apply surcharge no.1 at elev. 260.00	Yes	Yes	Yes
2	Install strut no.2 at elev. 238.00	Yes	Yes	Yes
3	Excav. to elev. 257.50 on PASSIVE side	Yes	Yes	Yes
4	Install strut no.1 at elev. 259.50	No	No	No
5	Apply water pressure profile no.1	Yes	Yes	Yes
6	Excav. to elev. 247.00 on PASSIVE side	Yes	Yes	Yes
7	Install strut no.3 at elev. 249.00	Yes	Yes	Yes
8	Apply water pressure profile no.2	Yes	Yes	Yes
9	Excav. to elev. 238.00 on PASSIVE side	Yes	Yes	Yes
*	Summary output	Yes	-	Yes

Program WALLAP - Copyright (C) 2007 by DL Borin, distributed by GEOSOLVE
69 Rodenhurst Road, London SW4, UK. Tel: +44 20 8674 7251

HALEY & ALDRICH, Inc.
Program: WALLAP Version 5.04 Revision A26.B38.R33
Licensed from GEOSOLVE
Run ID. 2007-1015-Cell O
GE Fletcher
Cell O

| Sheet No.
| Job No. 32608
| Made by : BV
| Date:28-12-2007
| Checked :

Units: lb,ft

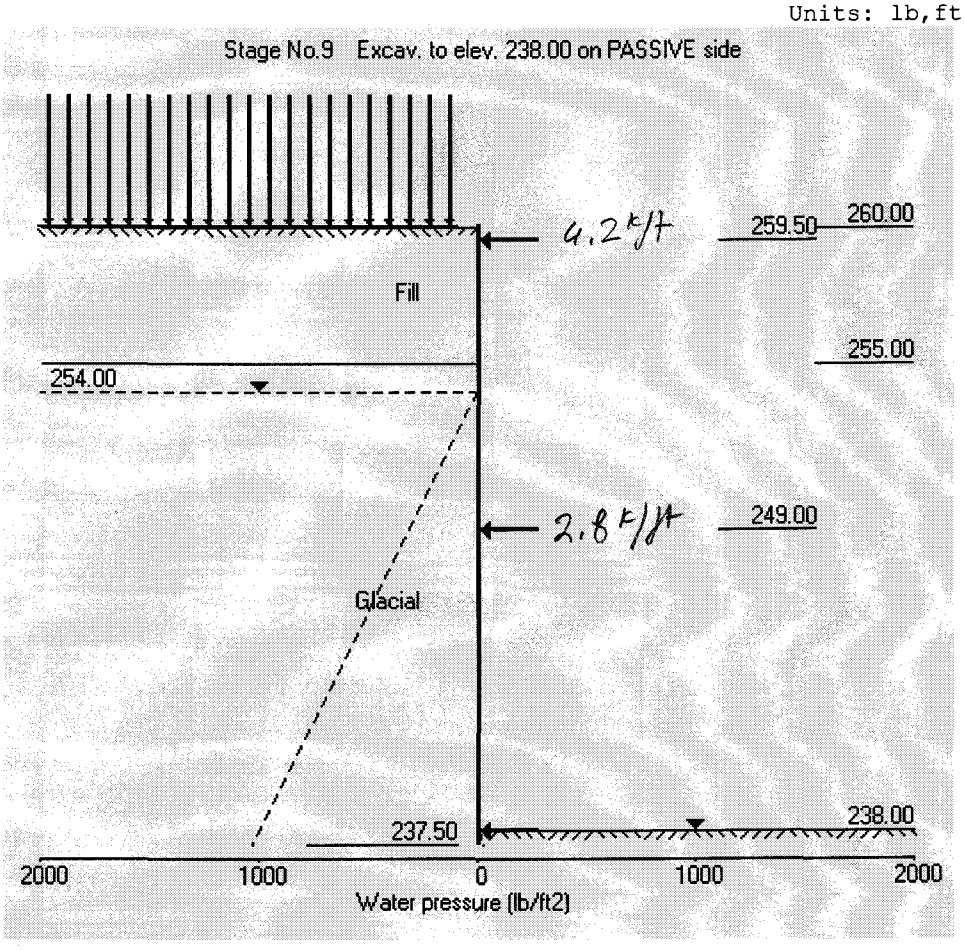

HALEY & ALDRICH, Inc.
Program: WALLAP Version 5.04 Revision A26.B38.R33
Licensed from GEOSOLVE
Run ID. 2007-1015-Cell O
GE Fletcher
Cell O

| Sheet No.
| Job No. 32608
| Made by : BV
| Date:28-12-2007
| Checked :

Units: lb,ft

Summary of results

STABILITY ANALYSIS according to Strength Factor method
Factor of safety on soil strength

Stage No.	--- G.L. --- Act.	Pass.	Strut Elev.	FoS for toe elev. = 237.50: Factor of Safety	Moment equilib. at elev.	Toe elev. for FoS = 1.000: Toe elev.	Wall Penetr -ation	Strut force for F=1.000: Strut force lb/ft run
1	260.00	260.00	Cant.		Conditions unsuitable for FoS calc.			
2	260.00	260.00			No analysis at this stage			
3	260.00	257.50	238.00		Conditions unsuitable for FoS calc.			
4	260.00	257.50			No analysis at this stage			

All remaining stages have more than one strut - FoS calculation n/a

HALEY & ALDRICH, Inc.
Program: WALLAP Version 5.04 Revision A26.B38.R33
Licensed from GEOSOLVE
Run ID. 2007-1015-Cell O
GE Fletcher
Cell O

| Sheet No.
| Job No. 32608
| Made by : BV
| Date:28-12-2007
| Checked :

Units: lb,ft

Summary of results

BENDING MOMENT and DISPLACEMENT CALCULATION - Assumptions:
Subgrade reaction model - Boussinesq Influence coefficients
Soil deformations are elastic until the active or passive limit is reached
Open Tension Crack analysis - No
Length of wall perpendicular to section = 1000.00ft

Rigid boundaries: Active side 20.00 from wall
Passive side 20.00 from wall

Bending moment, shear force and displacement envelopes

Node no.	Y coord	Displacement maximum ft	Displacement minimum ft	Bending moment maximum lb.ft/ft	Bending moment minimum lb.ft/ft	Shear force maximum lb/ft	Shear force minimum lb/ft
1	260.00	0.022	0.000	0.0	-0.0	0.0	0.0
2	259.50	0.023	0.000	1.8	-0.1	7.5	-4176.9
3	258.50	0.025	0.000	52.7	-4131.3	84.1	-4099.8
4	257.50	0.028	0.000	224.2	-8143.7	250.7	-3933.2
5	256.25	0.031	0.000	676.3	-12835.8	351.5	-3626.7
6	255.00	0.034	0.000	1087.7	-17092.1	218.8	-3232.9
7	254.00	0.036	0.000	1268.7	-20167.4	114.5	-2943.6
8	252.60	0.038	0.000	1337.6	-23957.3	0.9	-2433.5
9	251.20	0.039	0.000	1272.3	-26922.9	0.0	-1767.0
10	250.10	0.039	0.000	1157.2	-28531.4	0.0	-1135.7
11	249.00	0.039	0.000	1003.4	-29393.8	2.2	-3098.6
12	248.00	0.039	0.000	843.4	-30085.5	328.4	-2359.3
13	247.00	0.038	0.000	674.1	-32045.7 max	1143.8	-1543.9
14	245.90	0.036	0.000	487.4	$\boxed{-33213.9}$	1900.8	-559.5
15	244.80	0.034	0.000	311.3	-33137.3	2316.4	-149.6
16	243.20	0.029	0.000	89.8	-30964.6	2772.6	-113.4
17	241.60	0.024	0.000	0.0	-25692.0	4411.3	-59.7
18	240.00	0.017	0.000	0.0	-16800.1	6846.6	0.0
19	239.00	0.012	0.000	0.0	-9134.2	8544.0	0.0
20	238.00	0.007	0.000	297.4	-2.6	10379.4	-1041.6
21	237.50	0.007	0.000	0.0	-0.0	0.0	-0.0

Maximum and minimum bending moment and shear force at each stage

Stage no.	Bending moment maximum lb.ft/ft	elev.	Bending moment minimum lb.ft/ft	elev.	Shear force maximum lb/ft	elev.	Shear force minimum lb/ft	elev.
1	3.3	258.50	-478.7	249.00	62.5	243.20	-132.9	255.00
2	No calculation at this stage							
3	1337.6	252.60	-109.3	240.00	351.5	256.25	-168.6	247.00
4	No calculation at this stage							
5	No calculation at this stage							
6	172.3	238.00	-29443.7	248.00	5653.5	238.00	-4176.9	259.50
7	No calculation at this stage							
8	No calculation at this stage							
9	297.4	238.00	-33213.9	245.90	10379.4	238.00	-3983.1	259.50

Summary of results (continued)

Maximum and minimum displacement at each stage

Stage no.	Displacement maximum ft	elev.	Displacement minimum ft	elev.	Stage description
1	0.008	249.00	0.000	260.00	Apply surcharge no.1 at elev. 260.00
2	No calculation at this stage				Install strut no.2 at elev. 238.00
3	0.021	260.00	0.000	260.00	Excav. to elev. 257.50 on PASSIVE side
4	No calculation at this stage				Install strut no.1 at elev. 259.50
5	No calculation at this stage				Apply water pressure profile no.1
6	0.038	250.10	0.000	260.00	Excav. to elev. 247.00 on PASSIVE side
7	No calculation at this stage				Install strut no.3 at elev. 249.00
8	No calculation at this stage				Apply water pressure profile no.2
9	0.039	250.10	0.000	260.00	Excav. to elev. 238.00 on PASSIVE side

Strut forces at each stage (horizontal components)

Stage no.	Strut no. 1 at elev. 259.50 lb/ft run	lb/strut	Strut no. 2 at elev. 238.00 lb/ft run	lb/strut	Strut no. 3 at elev. 249.00 lb/ft run	lb/strut
3	---	---	172.7	1036.3	---	---
6	4183.9	83678.8	6194.8	37168.6	---	---
9	3990.6	79812.8	11421.0	68525.8	2882.6	57651.4

Units: lb,ft

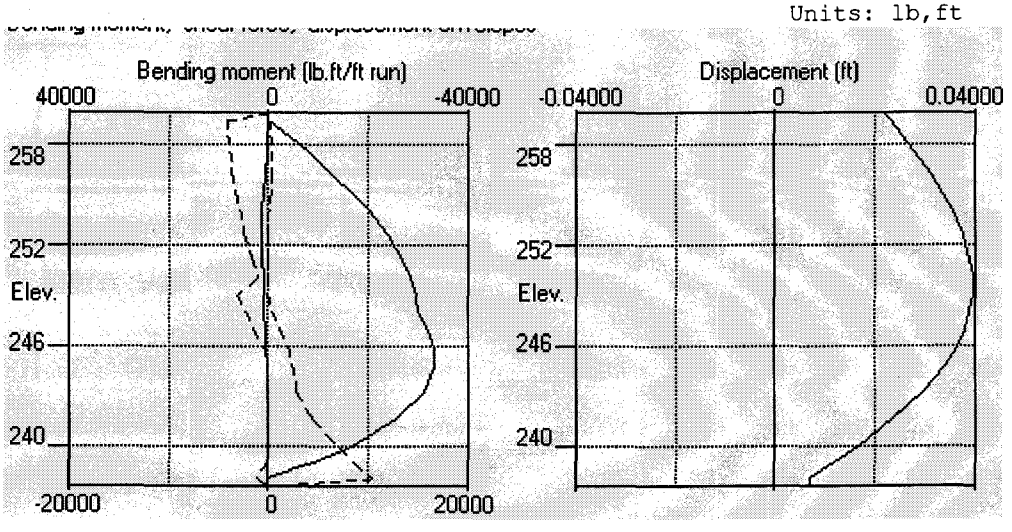

Cell O at Railroad 33 of 83

HALEY & ALDRICH, Inc.
Program: WALLAP Version 5.04 Revision A26.B38.R33
Licensed from GEOSOLVE
Run ID. 2007-1015-Cell O railroad
GE Fletcher
Cell O at railroad

| Sheet No.
| Job No. 32608
| Made by : BV
| Date:28-12-2007
| Checked :

Units: lb,ft

INPUT DATA

SOIL PROFILE

Stratum no.	Elevation of top of stratum	Soil types: Active side	Soil types: Passive side
1	264.00	1 Fill	1 Fill
2	255.00	2 Glacial	2 Glacial

SOIL PROPERTIES

-- Soil type -- No.	Description (Datum elev.)	Bulk density lb/ft3	Young's Modulus Eh,lb/ft2 (dEh/dy)	At rest coeff. Ko (dKo/dy)	Consol state. NC/OC (Nu)	Active limit Ka (Kac)	Passive limit Kp (Kpc)	Cohesion lb/ft2 (dc/dy)
1	Fill	120.0	0	0.500	NC	0.333	3.000	
			(60000)		(0.250)	(0.000)	(0.000)	
2	Glacial	125.0	120000	0.500	OC	0.260	5.000	
					(0.250)	(0.000)	(0.000)	

Additional soil parameters associated with Ka and Kp

------- Soil type ------- No.	Description	--- parameters for Ka --- Soil friction angle	Wall adhesion coeff.	Back-fill angle	--- parameters for Kp --- Soil friction angle	Wall adhesion coeff.	Back-fill angle
1	Fill	30.03	0.000	0.00	30.00	0.000	0.00
2	Glacial	35.97	0.000	0.00	41.81	0.000	0.00

GROUND WATER CONDITIONS

Density of water = 62.40 lb/ft3

	Active side	Passive side
Initial water table elevation	254.00	254.00

Automatic water pressure balancing at toe of wall : No

Water press. profile no.	Active side Point no.	Elev. ft	Piezo elev. ft	Water press. lb/ft2	Passive side Point no.	Elev. ft	Piezo elev. ft	Water press. lb/ft2
1	1	254.00	254.00	0.0	1	247.00	247.00	0.0
2	1	254.00	254.00	0.0	1	238.00	238.00	0.0

WALL PROPERTIES

Elevation of toe of wall = 237.50
Maximum finite element length = 1.60
Youngs modulus of wall E = 4.1700E+09 lb/ft2
Moment of inertia of wall I = 0.017650 ft4/ft run
E.I = 7.3601E+07 lb.ft2/ft run

STRUTS and ANCHORS

Strut/ anchor no.	Elev.	Strut spacing ft	X-section area of strut sq.ft	Youngs modulus lb/ft2	Free length ft	Inclin -ation (degs)	Pre-stress /strut lb	Tension allowed
1	259.50	20.00	0.180000	4.176E+09	25.00	0.00	0	No
2	238.00	5.00	0.030000	4.176E+09	1.00	0.00	0	No
3	249.00	20.00	0.180000	4.176E+09	25.00	0.00	0	No

SURCHARGE LOADS

Surcharge no.	Elev.	Distance from wall	Length parallel to wall	Width perpend. to wall	Surcharge ----- lb/ft2 ----- Near edge	Far edge	Equiv. soil type
1	264.00	8.25(A)	100.00	8.50	2940.00	=	N/A

Note: A = Active side, P = Passive side

CONSTRUCTION STAGES

Construction stage no.	Stage description
1	Apply surcharge no.1 at elevation 264.00
2	Install strut or anchor no.2 at elevation 238.00
3	Excavate to elevation 257.50 on PASSIVE side
4	Install strut or anchor no.1 at elevation 259.50
5	Apply water pressure profile no.1
	No analysis at this stage
6	Excavate to elevation 247.00 on PASSIVE side
7	Install strut or anchor no.3 at elevation 249.00
8	Apply water pressure profile no.2
	No analysis at this stage
9	Excavate to elevation 238.00 on PASSIVE side

FACTORS OF SAFETY and ANALYSIS OPTIONS

Type of structure - Retaining wall

Stability analysis:
Method of analysis - Strength Factor method
Factor on soil strength for calculating wall depth = 1.00
Factor on soil strength for calculating tie force = 1.00

Parameters for undrained strata:
Minimum equivalent fluid density = 0.00 lb/ft3
Maximum depth of water filled tension crack = 0.00 ft

Bending moment and displacement calculation:
Method - Subgrade reaction model using Influence Coefficients
Open Tension Crack analysis? - No
Non-linear Modulus Parameter (L) = 0 ft

Boundary conditions:
Length of wall (normal to plane of analysis) = 1000.00 ft

Width of excavation on active side of wall = 20.00 ft
Width of excavation on passive side of wall = 20.00 ft

Distance to rigid boundary on active side = 20.00 ft
Distance to rigid boundary on passive side = 20.00 ft

OUTPUT OPTIONS

Results to be stored on disk? - Yes
Results to be output on the printer? - No

Stage no.	Stage description	Output options: Displacement Bending mom. Shear force	Active, Passive pressures	Graph. output
1	Apply surcharge no.1 at elev. 264.00	Yes	Yes	Yes
2	Install strut no.2 at elev. 238.00	Yes	Yes	Yes
3	Excav. to elev. 257.50 on PASSIVE side	Yes	Yes	Yes
4	Install strut no.1 at elev. 259.50	No	No	No
5	Apply water pressure profile no.1	Yes	Yes	Yes
6	Excav. to elev. 247.00 on PASSIVE side	Yes	Yes	Yes
7	Install strut no.3 at elev. 249.00	Yes	Yes	Yes
8	Apply water pressure profile no.2	Yes	Yes	Yes
9	Excav. to elev. 238.00 on PASSIVE side	Yes	Yes	Yes
*	Summary output	Yes	-	Yes

Program WALLAP - Copyright (C) 2007 by DL Borin, distributed by GEOSOLVE
69 Rodenhurst Road, London SW4, UK. Tel: +44 20 8674 7251

HALEY & ALDRICH, Inc. | Sheet No.
Program: WALLAP Version 5.04 Revision A26.B38.R33 |
Licensed from GEOSOLVE | Job No. 32608
Run ID. 2007-1015-Cell O railroad | Made by : BV
GE Fletcher | Date:28-12-2007
Cell O at railroad | Checked :

Units: lb,ft

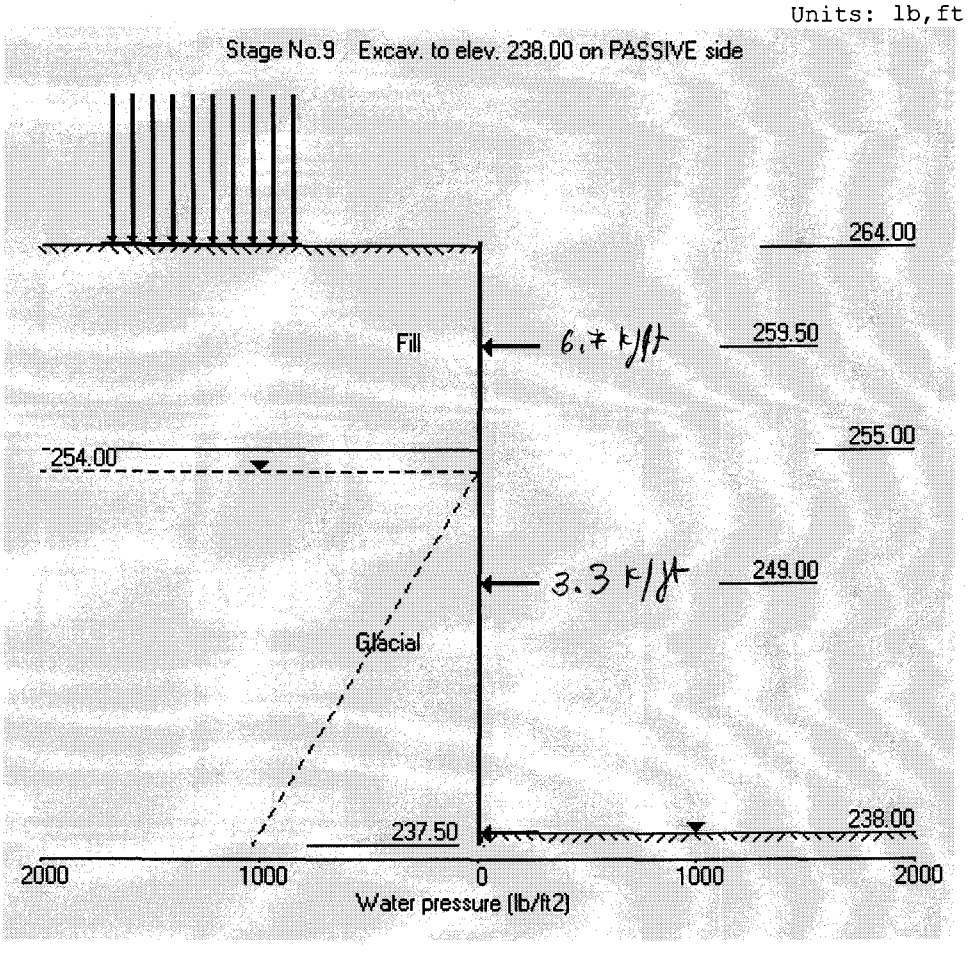

HALEY & ALDRICH, Inc. | Sheet No.
Program: WALLAP Version 5.04 Revision A26.B38.R33 |
Licensed from GEOSOLVE | Job No. 32608
Run ID. 2007-1015-Cell O railroad | Made by : BV
GE Fletcher | Date:28-12-2007
Cell O at railroad | Checked :

Units: lb,ft

Summary of results

STABILITY ANALYSIS according to Strength Factor method
Factor of safety on soil strength

Stage No.	--- G.L. --- Act.	Pass.	Strut Elev.	FoS for toe elev. = 237.50: Factor of Safety	Moment equilib. at elev.	Toe elev. for FoS = 1.000: Toe elev.	Wall Penetr -ation	Strut force for F=1.000: Strut force lb/ft run
1	264.00	264.00	Cant.		Conditions unsuitable for FoS calc.			
2	264.00	264.00			No analysis at this stage			
3	264.00	257.50	238.00		Conditions unsuitable for FoS calc.			
4	264.00	257.50			No analysis at this stage			

All remaining stages have more than one strut - FoS calculation n/a

HALEY & ALDRICH, Inc.
Program: WALLAP Version 5.04 Revision A26.B38.R33
Licensed from GEOSOLVE
Run ID. 2007-1015-Cell O railroad
GE Fletcher
Cell O at railroad

| Sheet No.
| Job No. 32608
| Made by : BV
| Date:28-12-2007
| Checked :

Units: lb,ft

Summary of results

BENDING MOMENT and DISPLACEMENT CALCULATION - Assumptions:
Subgrade reaction model - Boussinesq Influence coefficients
Soil deformations are elastic until the active or passive limit is reached
Open Tension Crack analysis - No
Length of wall perpendicular to section = 1000.00ft

Rigid boundaries: Active side 20.00 from wall
Passive side 20.00 from wall

Bending moment, shear force and displacement envelopes

Node no.	Y coord	Displacement maximum ft	Displacement minimum ft	Bending moment maximum lb.ft/ft	Bending moment minimum lb.ft/ft	Shear force maximum lb/ft	Shear force minimum lb/ft
1	264.00	0.054	-0.002	0.0	-0.0	0.0	0.0
2	262.40	0.051	-0.000	13.0	0.0	204.2	0.0
3	260.95	0.048	0.000	622.0	0.0	537.0	0.0
4	259.50	0.050	0.000	1664.9	0.0	849.3	-5966.4
5	258.50	0.052	0.000	1268.3	-4249.9	711.0	-5712.8
6	257.50	0.054	0.000	2145.7	-9796.3	1029.7	-5394.1
7	256.25	0.056	0.000	3642.8	-16211.7	1240.8	-4901.7
8	255.00	0.058	0.000	5123.0	-21940.2	991.8	-4305.5
9	254.00	0.059	0.000	5946.0	-26037.9	661.9	-3875.8
10	252.60	0.060	0.000	6559.0	-30982.5	231.9	-3146.6
11	251.20	0.061	0.000	6698.7	-34694.8	0.0	-2235.9
12	250.10	0.060	0.000	6432.3	-36710.9	0.0	-1396.9
13	249.00	0.059	0.000	5965.4	-37745.3	0.0	-3581.3
14	248.00	0.058	0.000	5416.2	-38779.4	495.8	-2633.2
15	247.00	0.056	0.000	4786.5	-40908.8	Max 1527.5	-1601.5
16	245.90	0.054	0.000	4039.7	$\boxed{-42009.8}$	2529.5	-686.5
17	244.80	0.050	0.000	3276.1	-41655.7	3175.9	-685.3
18	243.20	0.044	0.000	2197.3	-38334.9	3749.0	-630.7
19	241.60	0.037	0.000	1252.2	-31512.9	5581.0	-520.5
20	240.00	0.028	0.000	524.0	-20445.9	8424.4	-361.2
21	239.00	0.022	0.000	218.7	-11072.2	10393.1	-238.4
22	238.00	0.017	0.000	344.7	-9.2	12511.8	-1192.9
23	237.50	0.016	0.000	0.0	-0.0	0.0	-0.0

Maximum and minimum bending moment and shear force at each stage

Stage no.	Bending moment maximum lb.ft/ft	elev.	Bending moment minimum lb.ft/ft	elev.	Shear force maximum lb/ft	elev.	Shear force minimum lb/ft	elev.
1	250.4	257.50	-1442.3	249.00	189.7	243.20	-408.0	255.00
2	No calculation at this stage							
3	6698.7	251.20	-0.0	264.00	1240.8	256.25	-686.5	245.90
4	No calculation at this stage							
5	No calculation at this stage							
6	1585.1	259.50	-37745.3	249.00	6777.3	238.00	-5966.4	259.50
7	No calculation at this stage							
8	No calculation at this stage							
9	1664.9	259.50	-42009.8	245.90	12511.8	238.00	-5778.2	259.50

37 of 83

Summary of results (continued)

Maximum and minimum displacement at each stage

Stage no.	Displacement maximum ft	elev.	minimum ft	elev.	Stage description
1	0.016	237.50	-0.002	264.00	Apply surcharge no.1 at elev. 264.00
2	No calculation at this stage				Install strut no.2 at elev. 238.00
3	0.054	264.00	0.000	264.00	Excav. to elev. 257.50 on PASSIVE side
4	No calculation at this stage				Install strut no.1 at elev. 259.50
5	No calculation at this stage				Apply water pressure profile no.1
6	0.059	251.20	0.000	264.00	Excav. to elev. 247.00 on PASSIVE side
7	No calculation at this stage				Install strut no.3 at elev. 249.00
8	No calculation at this stage				Apply water pressure profile no.2
9	0.061	251.20	0.000	264.00	Excav. to elev. 238.00 on PASSIVE side

Strut forces at each stage (horizontal components)

Stage no.	Strut no. 1 at elev. 259.50 lb/ft run	lb/strut	Strut no. 2 at elev. 238.00 lb/ft run	lb/strut	Strut no. 3 at elev. 249.00 lb/ft run	lb/strut
3	---	---	27.5	137.4	---	---
6	6774.5	135490.5	7425.0	37124.9	---	---
9	6627.5	132549.1	13704.7	68523.7	3320.0	66399.9

Units: lb,ft

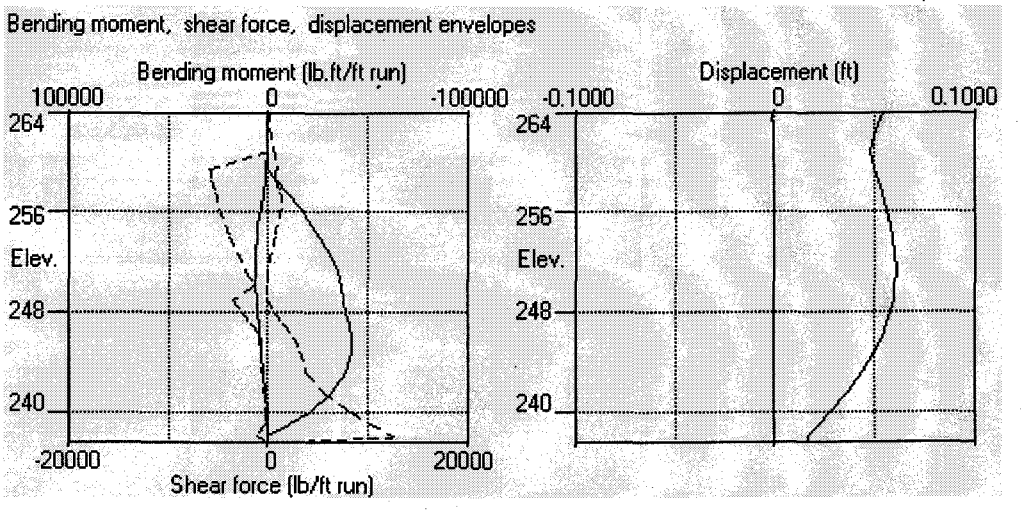

Cell O 38 of 8-
Center Wall

HALEY & ALDRICH, Inc.
Program: WALLAP Version 5.04 Revision A26.B38.R33
Licensed from GEOSOLVE
Run ID. 2007-1015-Cell O center wall
GE Fletcher
Cell O Center

| Sheet No.
| Job No. 32608
| Made by : BV
| Date:28-12-2007
| Checked :

Units: lb,ft

INPUT DATA

SOIL PROFILE

Stratum no.	Elevation of top of stratum	Soil types: Active side	Soil types: Passive side
1	260.00	1 Fill	1 Fill
2	255.00	1 Fill	2 Glacial

SOIL PROPERTIES

-- Soil type -- No.	Description (Datum elev.)	Bulk density lb/ft3	Young's Modulus Eh,lb/ft2 (dEh/dy)	At rest coeff. Ko (dKo/dy)	Consol state. NC/OC (Nu)	Active limit Ka (Kac)	Passive limit Kp (Kpc)	Cohesion lb/ft2 (dc/dy)
1	Fill	120.0	0	0.500	NC	0.333	3.000	
			(60000)		(0.250)	(0.000)	(0.000)	
2	Glacial	125.0	120000	0.500	OC	0.260	5.000	
					(0.250)	(0.000)	(0.000)	

Additional soil parameters associated with Ka and Kp

------- Soil type ------- No.	Description	--- parameters for Ka --- Soil friction angle	Wall adhesion coeff.	Back-fill angle	--- parameters for Kp --- Soil friction angle	Wall adhesion coeff.	Back-fill angle
1	Fill	30.03	0.000	0.00	30.00	0.000	0.00
2	Glacial	35.97	0.000	0.00	41.81	0.000	0.00

GROUND WATER CONDITIONS

Density of water = 62.40 lb/ft3

	Active side	Passive side
Initial water table elevation	254.00	254.00

Automatic water pressure balancing at toe of wall : No

Water press. profile no.	Active side Point no.	Elev. ft	Piezo elev. ft	Water press. lb/ft2	Passive side Point no.	Elev. ft	Piezo elev. ft	Water press. lb/ft2
1	1	254.00	254.00	0.0	1	247.00	247.00	0.0
2	1	254.00	254.00	0.0	1	238.00	238.00	0.0

WALL PROPERTIES

Elevation of toe of wall = 237.50
Maximum finite element length = 1.60
Youngs modulus of wall E = 4.1700E+09 lb/ft2
Moment of inertia of wall I = 0.014700 ft4/ft run
E.I = 6.1299E+07 lb.ft2/ft run

STRUTS and ANCHORS

Strut/ anchor no.	Elev.	Strut spacing ft	X-section area of strut sq.ft	Youngs modulus lb/ft2	Free length ft	Inclin -ation (degs)	Pre-stress /strut lb	Tension allowed
1	259.50	20.00	0.180000	4.176E+09	25.00	0.00	0	No
2	238.00	6.00	0.030000	4.176E+09	0.10	0.00	0	No
3	249.00	20.00	0.180000	4.176E+09	25.00	0.00	0	No

SURCHARGE LOADS

Surcharge no.	Elev.	Distance from wall	Length parallel to wall	Width perpend. to wall	Surcharge ----- lb/ft2 ----- Near edge	Far edge	Equiv. soil type
1	260.00	1.00(A)	30.00	20.00	600.00	=	N/A

Note: A = Active side, P = Passive side

CONSTRUCTION STAGES

Construction stage no.	Stage description
1	Apply surcharge no.1 at elevation 260.00
2	Install strut or anchor no.2 at elevation 238.00
3	Excavate to elevation 257.50 on PASSIVE side
4	Install strut or anchor no.1 at elevation 259.50
5	Apply water pressure profile no.1
	No analysis at this stage
6	Excavate to elevation 247.00 on PASSIVE side
7	Install strut or anchor no.3 at elevation 249.00
8	Apply water pressure profile no.2
	No analysis at this stage
9	Excavate to elevation 238.00 on PASSIVE side

FACTORS OF SAFETY and ANALYSIS OPTIONS

Type of structure - Retaining wall

Stability analysis:
Method of analysis - Strength Factor method
Factor on soil strength for calculating wall depth = 1.00
Factor on soil strength for calculating tie force = 1.00

Parameters for undrained strata:
Minimum equivalent fluid density = 0.00 lb/ft3
Maximum depth of water filled tension crack = 0.00 ft

Bending moment and displacement calculation:
Method - Subgrade reaction model using Influence Coefficients
Open Tension Crack analysis? - No
Non-linear Modulus Parameter (L) = 0 ft

Boundary conditions:
Length of wall (normal to plane of analysis) = 1000.00 ft

Width of excavation on active side of wall = 20.00 ft
Width of excavation on passive side of wall = 20.00 ft

Distance to rigid boundary on active side = 20.00 ft
Distance to rigid boundary on passive side = 20.00 ft

OUTPUT OPTIONS

Results to be stored on disk? - Yes
Results to be output on the printer? - No

Stage no.	Stage description	Output options: Displacement Bending mom. Shear force	Active, Passive pressures	Graph. output
1	Apply surcharge no.1 at elev. 260.00	Yes	Yes	Yes
2	Install strut no.2 at elev. 238.00	Yes	Yes	Yes
3	Excav. to elev. 257.50 on PASSIVE side	Yes	Yes	Yes
4	Install strut no.1 at elev. 259.50	No	No	No
5	Apply water pressure profile no.1	Yes	Yes	Yes
6	Excav. to elev. 247.00 on PASSIVE side	Yes	Yes	Yes
7	Install strut no.3 at elev. 249.00	Yes	Yes	Yes
8	Apply water pressure profile no.2	Yes	Yes	Yes
9	Excav. to elev. 238.00 on PASSIVE side	Yes	Yes	Yes
*	Summary output	Yes	-	Yes

Program WALLAP - Copyright (C) 2007 by DL Borin, distributed by GEOSOLVE
69 Rodenhurst Road, London SW4, UK. Tel: +44 20 8674 7251

HALEY & ALDRICH, Inc.
Program: WALLAP Version 5.04 Revision A26.B38.R33
Licensed from GEOSOLVE
Run ID. 2007-1015-Cell O center wall
GE Fletcher
Cell O Center

| Sheet No.
| Job No. 32608
| Made by : BV
| Date:28-12-2007
| Checked :

Units: lb,ft

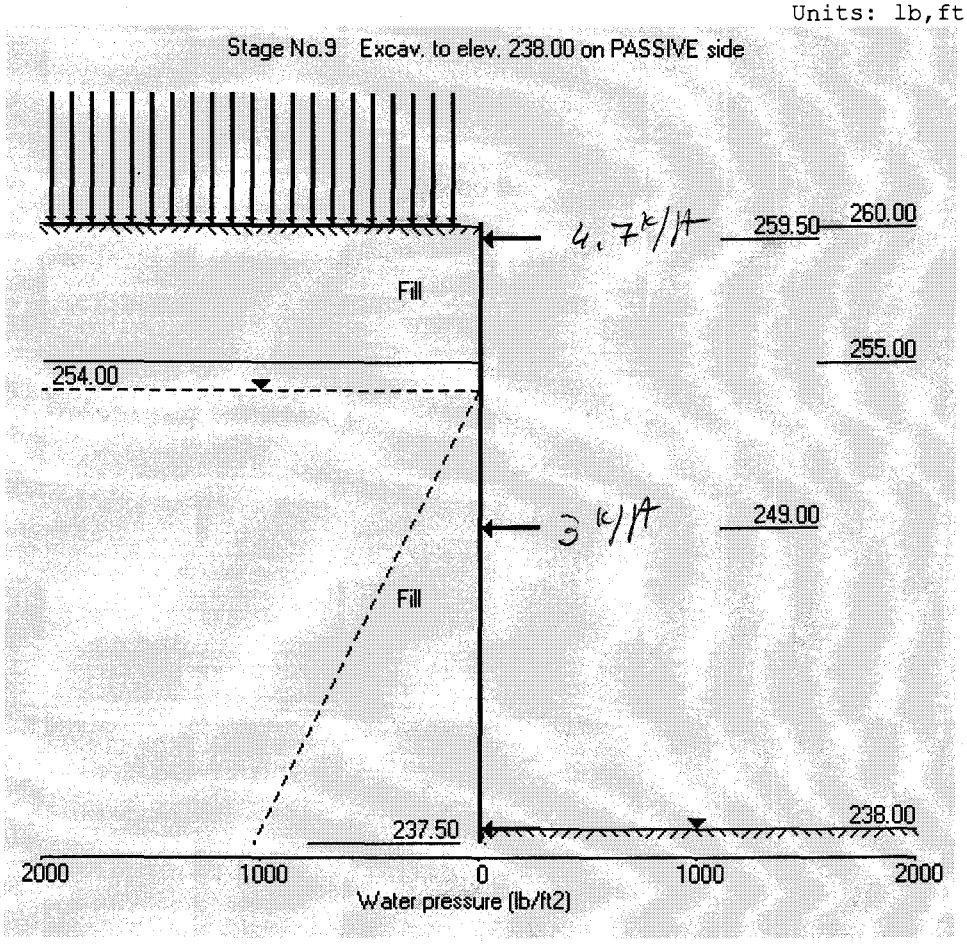

HALEY & ALDRICH, Inc.
Program: WALLAP Version 5.04 Revision A26.B38.R33
Licensed from GEOSOLVE
Run ID. 2007-1015-Cell O center wall
GE Fletcher
Cell O Center

| Sheet No.
| Job No. 32608
| Made by : BV
| Date:28-12-2007
| Checked :

Units: lb,ft

Summary of results

STABILITY ANALYSIS according to Strength Factor method
Factor of safety on soil strength

Stage No.	G.L. Act.	G.L. Pass.	Strut Elev.	FoS for toe elev. = 237.50: Factor of Safety	Moment equilib. at elev.	Toe elev. for FoS = 1.000: Toe elev.	Wall Penetr -ation	Strut force for F=1.000: Strut force lb/ft run
1	260.00	260.00	Cant.		Conditions unsuitable for FoS calc.			
2	260.00	260.00			No analysis at this stage			
3	260.00	257.50	238.00		Conditions unsuitable for FoS calc.			
4	260.00	257.50			No analysis at this stage			

All remaining stages have more than one strut - FoS calculation n/a

HALEY & ALDRICH, Inc.
Program: WALLAP Version 5.04 Revision A26.B38.R33
Licensed from GEOSOLVE
Run ID. 2007-1015-Cell O center wall
GE Fletcher
Cell O Center

| Sheet No.
| Job No. 32608
| Made by : BV
| Date:28-12-2007
| Checked :

Units: lb,ft

Summary of results

BENDING MOMENT and DISPLACEMENT CALCULATION - Assumptions:
Subgrade reaction model - Boussinesq Influence coefficients
Soil deformations are elastic until the active or passive limit is reached
Open Tension Crack analysis - No
Length of wall perpendicular to section = 1000.00ft

Rigid boundaries: Active side 20.00 from wall
Passive side 20.00 from wall

Bending moment, shear force and displacement envelopes

Node no.	Y coord	Displacement maximum ft	Displacement minimum ft	Bending moment maximum lb.ft/ft	Bending moment minimum lb.ft/ft	Shear force maximum lb/ft	Shear force minimum lb/ft
1	260.00	0.021	0.000	0.0	-0.0	0.0	0.0
2	259.50	0.022	0.000	1.8	-0.1	7.5	-4671.4
3	258.50	0.024	0.000	52.1	-4626.4	84.1	-4594.3
4	257.50	0.027	0.000	221.9	-9135.0	250.7	-4427.7
5	256.25	0.030	0.000	672.9	-14450.5	361.4	-4121.2
6	255.00	0.033	0.000	1105.0	-19333.1	258.4	-3727.4
7	254.00	0.035	0.000	1350.0	-22878.8	229.7	-3357.7
8	252.60	0.037	0.000	1643.4	-27155.9	189.7	-2725.5
9	251.20	0.038	0.000	1881.7	-30435.1	152.3	-1930.7
10	250.10	0.039	0.000	2031.3	-32164.1	121.4	-1194.6
11	249.00	0.038	0.000	2144.5	-33030.8	86.7	-3081.8
12	248.00	0.038	0.000	2211.6	-33642.8	477.6	-2242.1
13	247.00	0.036	0.000	2239.2	-35434.5	MAX 1395.6	-1324.1
14	245.90	0.034	0.000	2215.5	-36298.0	2267.9	-224.5
15	244.80	0.031	0.000	2126.2	-35826.7	2779.7	-110.9
16	243.20	0.026	0.000	1849.6	-32820.8	3303.8	-223.4
17	241.60	0.019	0.000	1439.6	-26560.7	4971.6	-346.7
18	240.00	0.011	0.000	780.0	-16878.6	7268.8	-399.3
19	239.00	0.006	0.000	384.1	-8870.5	8804.9	-358.3
20	238.00	0.001	0.000	754.5	0.0	10602.6	-1988.2
21	237.50	0.001	-0.002	0.0	-0.0	0.0	-0.0

Maximum and minimum bending moment and shear force at each stage

Stage no.	Bending moment maximum lb.ft/ft	elev.	Bending moment minimum lb.ft/ft	elev.	Shear force maximum lb/ft	elev.	Shear force minimum lb/ft	elev.
1	374.9	245.90	-0.1	259.50	61.9	250.10	-61.3	241.60
2	No calculation at this stage							
3	2239.2	247.00	-0.0	260.00	361.4	256.25	-399.3	240.00
4	No calculation at this stage							
5	No calculation at this stage							
6	566.8	238.00	-33030.8	249.00	5922.2	238.00	-4671.4	259.50
7	No calculation at this stage							
8	No calculation at this stage							
9	754.5	238.00	-36298.0	245.90	10602.6	238.00	-4476.4	259.50

Run ID. 2007-1015-Cell O center wall | Sheet No.
GE Fletcher | Date:28-12-2007
Cell O Center | Checked :

Summary of results (continued)

Maximum and minimum displacement at each stage

Stage no.	Displacement maximum ft	elev.	minimum ft	elev.	Stage description
1	0.006	260.00	0.000	260.00	Apply surcharge no.1 at elev. 260.00
2	No calculation at this stage				Install strut no.2 at elev. 238.00
3	0.019	260.00	0.000	260.00	Excav. to elev. 257.50 on PASSIVE side
4	No calculation at this stage				Install strut no.1 at elev. 259.50
5	No calculation at this stage				Apply water pressure profile no.1
6	0.037	250.10	-0.002	237.50	Excav. to elev. 247.00 on PASSIVE side
7	No calculation at this stage				Install strut no.3 at elev. 249.00
8	No calculation at this stage				Apply water pressure profile no.2
9	0.039	250.10	-0.002	237.50	Excav. to elev. 238.00 on PASSIVE side

Strut forces at each stage (horizontal components)

Stage no.	Strut no. 1 at elev. 259.50 lb/ft run	lb/strut	Strut no. 2 at elev. 238.00 lb/ft run	lb/strut	Strut no. 3 at elev. 249.00 lb/ft run	lb/strut
3	---	---	slack	slack	---	---
6	4678.4	93568.8	7298.6	43791.3	---	---
9	4484.0	89679.7	12590.8	75544.9	2915.8	58315.9

HALEY & ALDRICH, Inc. | Sheet No.
Program: WALLAP Version 5.04 Revision A26.B38.R33 |
Licensed from GEOSOLVE | Job No. 32608
Run ID. 2007-1015-Cell O center wall | Made by : BV
GE Fletcher | Date:28-12-2007
Cell O Center | Checked :

Units: lb,ft

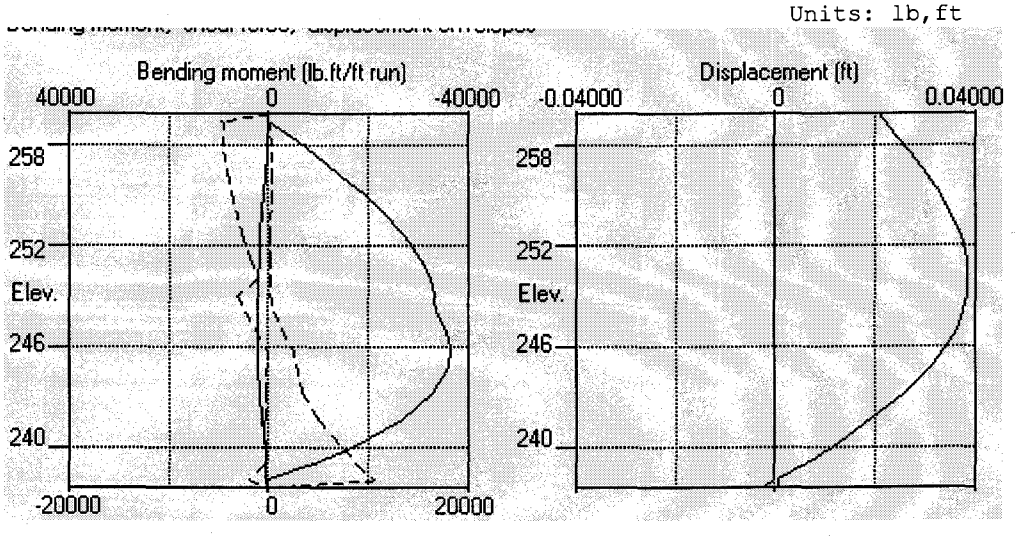

DESIGN CASE CELL R

HALEY & ALDRICH	CALCULATIONS	File No. 32608-003
		Sheet 44 of 83
Client: Arcadio BBL		Date: 10/18/07
Project: Fletcher's Paint Work Superfund Site		Computed By: BV
Subject: Mill Street Design case		Checked By:

Cell R

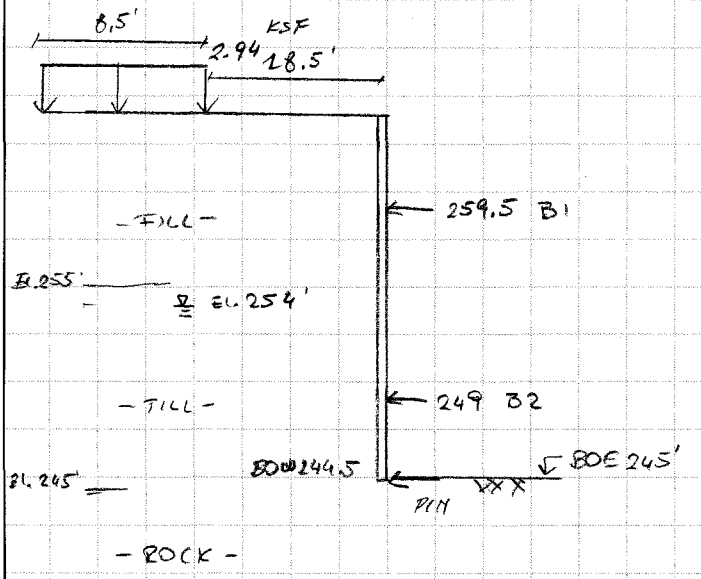

Cell R close to Rail Road

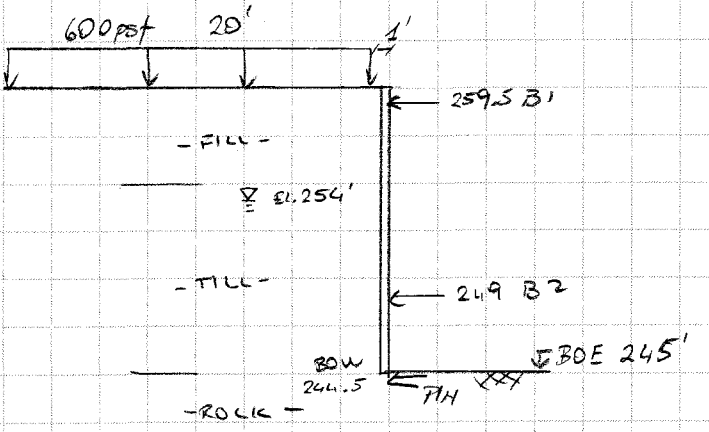

Cell R east side

HALEY & ALDRICH, Inc.
Program: WALLAP Version 5.04 Revision A26.B38.R33
Licensed from GEOSOLVE
Run ID. 2007-1015-Cell R
GE Fletcher
Cell R

| Sheet No.
| Job No. 32608
| Made by : BV
| Date:28-12-2007
| Checked :

Units: lb,ft

INPUT DATA

SOIL PROFILE

Stratum no.	Elevation of top of stratum	Soil types: Active side	Soil types: Passive side
1	260.00	1 Fill	1 Fill
2	255.00	2 Glacial	2 Glacial

SOIL PROPERTIES

-- Soil type -- No.	Description (Datum elev.)	Bulk density lb/ft3	Young's Modulus Eh,lb/ft2 (dEh/dy)	At rest coeff. Ko (dKo/dy)	Consol state. NC/OC (Nu)	Active limit Ka (Kac)	Passive limit Kp (Kpc)	Cohesion lb/ft2 (dc/dy)
1	Fill	120.0	0	0.500	NC	0.333	3.000	
			(60000)		(0.250)	(0.000)	(0.000)	
2	Glacial	125.0	120000	0.500	OC	0.260	3.852	
					(0.250)	(0.000)	(0.000)	

Additional soil parameters associated with Ka and Kp

------- Soil type ------- No.	Description	--- parameters for Ka --- Soil friction angle	Wall adhesion coeff.	Back-fill angle	--- parameters for Kp --- Soil friction angle	Wall adhesion coeff.	Back-fill angle
1	Fill	30.03	0.000	0.00	30.00	0.000	0.00
2	Glacial	35.97	0.000	0.00	36.00	0.000	0.00

GROUND WATER CONDITIONS

Density of water = 62.40 lb/ft3

	Active side	Passive side
Initial water table elevation	254.00	254.00

Automatic water pressure balancing at toe of wall : No

Water press. profile no.	Active side: Point no.	Elev. ft	Piezo elev. ft	Water press. lb/ft2	Passive side: Point no.	Elev. ft	Piezo elev. ft	Water press. lb/ft2
1	1	254.00	254.00	0.0	1	247.00	247.00	0.0
2	1	254.00	254.00	0.0	1	245.00	245.00	0.0

WALL PROPERTIES

Elevation of toe of wall = 244.50
Maximum finite element length = 0.80
Youngs modulus of wall E = 4.1700E+09 lb/ft2
Moment of inertia of wall I = 0.014700 ft4/ft run
E.I = 6.1299E+07 lb.ft2/ft run

STRUTS and ANCHORS

Strut/ anchor no.	Elev.	Strut spacing ft	X-section area of strut sq.ft	Youngs modulus lb/ft2	Free length ft	Inclin -ation (degs)	Pre-stress /strut lb	Tension allowed
1	259.50	20.00	0.180000	4.176E+09	25.00	0.00	0	No
2	245.00	6.00	0.030000	4.176E+09	0.10	0.00	0	No
3	249.00	20.00	0.180000	4.176E+09	25.00	0.00	0	No

SURCHARGE LOADS

Surcharge no.	Elev.	Distance from wall	Length parallel to wall	Width perpend. to wall	Surcharge ----- lb/ft2 ----- Near edge	Far edge	Equiv. soil type
1	260.00	1.00(A)	30.00	20.00	600.00	=	N/A

Note: A = Active side, P = Passive side

CONSTRUCTION STAGES

Construction stage no.	Stage description
1	Apply surcharge no.1 at elevation 260.00
2	Install strut or anchor no.2 at elevation 245.00
3	Excavate to elevation 257.50 on PASSIVE side
4	Install strut or anchor no.1 at elevation 259.50
5	Apply water pressure profile no.1
	No analysis at this stage
6	Excavate to elevation 247.00 on PASSIVE side
7	Install strut or anchor no.3 at elevation 249.00
8	Apply water pressure profile no.2
	No analysis at this stage
9	Excavate to elevation 245.00 on PASSIVE side

FACTORS OF SAFETY and ANALYSIS OPTIONS

Type of structure - Retaining wall

Stability analysis:
Method of analysis - Strength Factor method
Factor on soil strength for calculating wall depth = 1.00
Factor on soil strength for calculating tie force = 1.00

Parameters for undrained strata:
Minimum equivalent fluid density = 0.00 lb/ft3
Maximum depth of water filled tension crack = 0.00 ft

Bending moment and displacement calculation:
Method - Subgrade reaction model using Influence Coefficients
Open Tension Crack analysis? - No
Non-linear Modulus Parameter (L) = 0 ft

Boundary conditions:
Length of wall (normal to plane of analysis) = 1000.00 ft

Width of excavation on active side of wall = 20.00 ft
Width of excavation on passive side of wall = 20.00 ft

Distance to rigid boundary on active side = 20.00 ft
Distance to rigid boundary on passive side = 20.00 ft

OUTPUT OPTIONS

Results to be stored on disk? - Yes
Results to be output on the printer? - No

Stage no.	Stage description	Output options: Displacement Bending mom. Shear force	Active, Passive pressures	Graph. output
1	Apply surcharge no.1 at elev. 260.00	Yes	Yes	Yes
2	Install strut no.2 at elev. 245.00	Yes	Yes	Yes
3	Excav. to elev. 257.50 on PASSIVE side	Yes	Yes	Yes
4	Install strut no.1 at elev. 259.50	No	No	No
5	Apply water pressure profile no.1	Yes	Yes	Yes
6	Excav. to elev. 247.00 on PASSIVE side	Yes	Yes	Yes
7	Install strut no.3 at elev. 249.00	Yes	Yes	Yes
8	Apply water pressure profile no.2	Yes	Yes	Yes
9	Excav. to elev. 245.00 on PASSIVE side	Yes	Yes	Yes
*	Summary output	Yes	-	Yes

Program WALLAP - Copyright (C) 2007 by DL Borin, distributed by GEOSOLVE
69 Rodenhurst Road, London SW4, UK. Tel: +44 20 8674 7251

HALEY & ALDRICH, Inc.
Program: WALLAP Version 5.04 Revision A26.B38.R33
Licensed from GEOSOLVE
Run ID. 2007-1015-Cell R
GE Fletcher
Cell R

| Sheet No.
| Job No. 32608
| Made by : BV
| Date:28-12-2007
| Checked :

Units: lb,ft

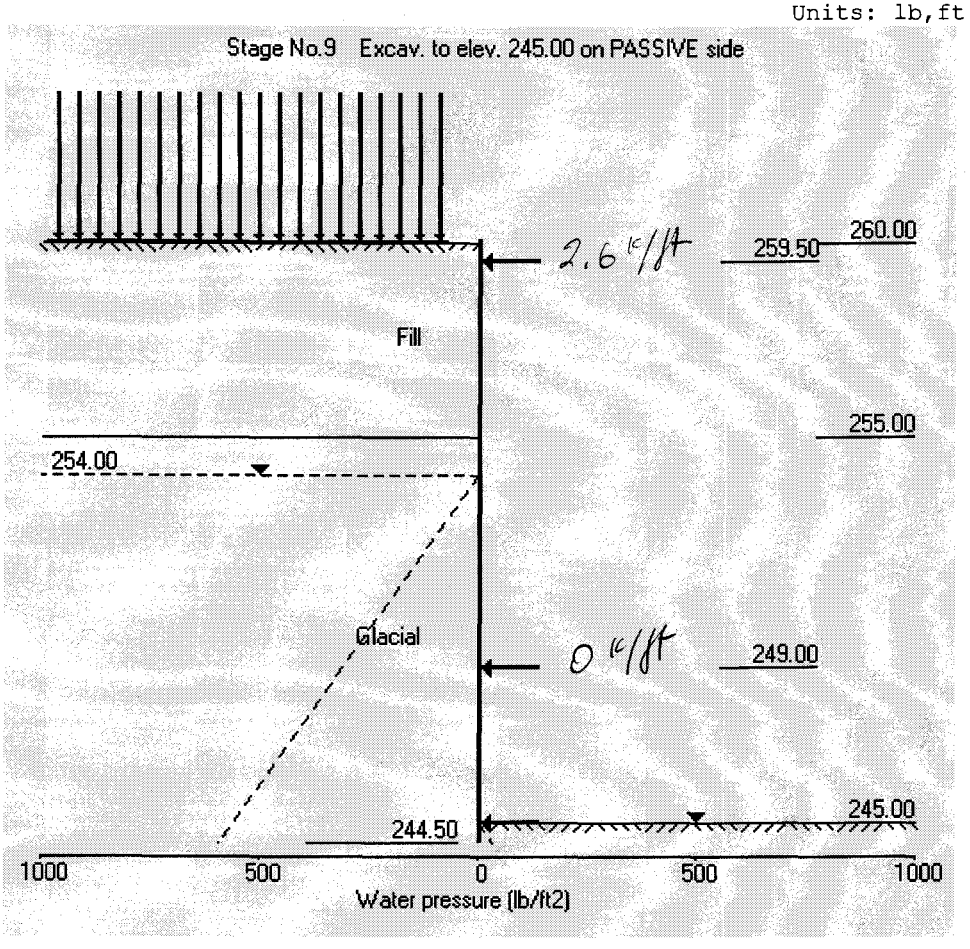

HALEY & ALDRICH, Inc.
Program: WALLAP Version 5.04 Revision A26.B38.R33
Licensed from GEOSOLVE
Run ID. 2007-1015-Cell R
GE Fletcher
Cell R

| Sheet No.
| Job No. 32608
| Made by : BV
| Date:28-12-2007
| Checked :

Units: lb,ft

Summary of results

STABILITY ANALYSIS according to Strength Factor method
Factor of safety on soil strength

Stage No.	--- G.L. --- Act.	Pass.	Strut Elev.	FoS for toe elev. = 244.50: Factor of Safety	Moment equilib. at elev.	Toe elev. for FoS = 1.000: Toe elev.	Wall Penetr -ation	Strut force for F=1.000: Strut force lb/ft run
1	260.00	260.00	Cant.		Conditions unsuitable for FoS calc.			
2	260.00	260.00			No analysis at this stage			
3	260.00	257.50	245.00		Conditions unsuitable for FoS calc.			
4	260.00	257.50			No analysis at this stage			

All remaining stages have more than one strut - FoS calculation n/a

HALEY & ALDRICH, Inc.
Program: WALLAP Version 5.04 Revision A26.B38.R33
Licensed from GEOSOLVE
Run ID. 2007-1015-Cell R
GE Fletcher
Cell R

| Sheet No.
| Job No. 32608
| Made by : BV
| Date:28-12-2007
| Checked :

Units: lb,ft

Summary of results

BENDING MOMENT and DISPLACEMENT CALCULATION - Assumptions:
Subgrade reaction model - Boussinesq Influence coefficients
Soil deformations are elastic until the active or passive limit is reached
Open Tension Crack analysis - No
Length of wall perpendicular to section = 1000.00ft

Rigid boundaries: Active side 20.00 from wall
Passive side 20.00 from wall

Bending moment, shear force and displacement envelopes

Node no.	Y coord	Displacement maximum ft	Displacement minimum ft	Bending moment maximum lb.ft/ft	Bending moment minimum lb.ft/ft	Shear force maximum lb/ft	Shear force minimum lb/ft
1	260.00	0.021	0.000	0.0	-0.0	0.0	0.0
2	259.50	0.021	0.000	1.8	-0.1	7.0	-2609.5
3	258.95	0.021	0.000	14.9	-1424.2	37.1	-2579.4
4	258.40	0.021	0.000	52.0	-2826.2	96.7	-2519.8
5	257.95	0.021	0.000	111.5	-3944.2	166.3	-2450.3
6	257.50	0.021	0.000	205.9	-5027.2	251.9	-2364.6
7	256.75	0.021	0.000	444.0	-6727.8	330.0	-2191.4
8	256.00	0.021	0.000	693.8	-8286.1	300.8	-1984.5
9	255.50	0.021	0.000	834.9	-9237.5	248.5	-1829.6
10	255.00	0.021	0.000	943.4	-10108.4	170.9	-1662.3
11	254.50	0.021	0.000	1017.8	-10900.4	108.9	-1522.2
12	254.00	0.020	0.000	1057.3	-11625.1	52.2	-1372.9
13	253.40	0.020	0.000	1069.6	-12391.3	0.0	-1173.5
14	252.80	0.020	0.000	1049.6	-13029.2	0.0	-945.1
15	252.00	0.019	0.000	981.2	~~-13641.6~~ MOIX	0.0	-587.9
16	251.20	0.018	0.000	877.4	$\boxed{-13948.9}$	2.2	-163.4
17	250.40	0.017	0.000	749.6	-13889.3	339.7	-167.9
18	249.70	0.017	0.000	626.8	-13492.3	828.3	-177.5
19	249.00	0.016	0.000	500.7	-12735.0	1370.5	-177.7
20	248.50	0.015	0.000	412.6	-11979.2	1790.9	-172.3
21	248.00	0.014	0.000	328.3	-11006.3	2239.1	-162.3
22	247.50	0.013	0.000	250.1	-9802.5	2715.3	-148.0
23	247.00	0.012	0.000	180.1	-8353.7	3219.7	-129.4
24	246.50	0.011	0.000	120.5	-6645.6	3714.5	-106.5
25	246.00	0.010	0.000	73.4	-4664.1	4247.4	-79.5
26	245.50	0.009	0.000	40.8	-2393.6	4837.0	-48.5
27	245.00	0.008	0.000	176.2	-2.7	5455.3	-646.3
28	244.50	0.008	0.000	0.0	0.0	0.0	-0.0

Maximum and minimum bending moment and shear force at each stage

Stage no.	Bending moment maximum lb.ft/ft	Bending moment elev.	Bending moment minimum lb.ft/ft	Bending moment elev.	Shear force maximum lb/ft	Shear force elev.	Shear force minimum lb/ft	Shear force elev.
1	17.4	256.00	-162.3	251.20	35.5	248.00	-79.3	255.00
2	No calculation at this stage							
3	1069.6	253.40	0.0	260.00	330.0	256.75	-177.7	249.00
4	No calculation at this stage							
5	No calculation at this stage							
6	140.5	245.00	-13872.9	251.20	4952.6	245.00	-2600.4	259.50
7	No calculation at this stage							
8	No calculation at this stage							
9	176.2	245.00	-13948.9	251.20	5455.3	245.00	-2609.5	259.50

49 of 83

Summary of results (continued)

Maximum and minimum displacement at each stage

Stage no.	Displacement maximum ft	elev.	Displacement minimum ft	elev.	Stage description
1	0.008	244.50	0.000	260.00	Apply surcharge no.1 at elev. 260.00
2	No calculation at this stage				Install strut no.2 at elev. 245.00
3	0.020	260.00	0.000	260.00	Excav. to elev. 257.50 on PASSIVE side
4	No calculation at this stage				Install strut no.1 at elev. 259.50
5	No calculation at this stage				Apply water pressure profile no.1
6	0.021	257.50	0.000	260.00	Excav. to elev. 247.00 on PASSIVE side
7	No calculation at this stage				Install strut no.3 at elev. 249.00
8	No calculation at this stage				Apply water pressure profile no.2
9	0.021	256.75	0.000	260.00	Excav. to elev. 245.00 on PASSIVE side

Strut forces at each stage (horizontal components)

Stage no.	Strut no. 1 at elev. 259.50 lb/ft run	lb/strut	Strut no. 2 at elev. 245.00 lb/ft run	lb/strut	Strut no. 3 at elev. 249.00 lb/ft run	lb/strut
3	---	---	54.4	326.4	---	---
6	2607.4	52148.8	5434.3	32606.1	---	---
9	2616.6	52331.2	6101.6	36609.6	54.8	1095.9

Units: lb,ft

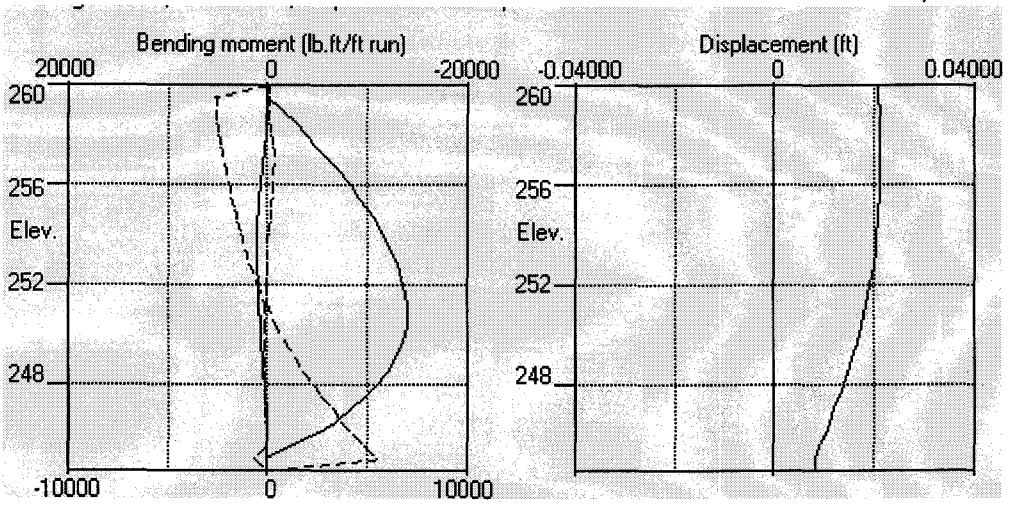

Cell R at Railroad

HALEY & ALDRICH, Inc.
Program: WALLAP Version 5.04 Revision A26.B38.R33
Licensed from GEOSOLVE
Run ID. 2007-1015-Cell R railroad
GE Fletcher
Cell R at railroad

| Sheet No.
| Job No. 32608
| Made by : DRS
| Date:28-12-2007
| Checked :

Units: lb,ft

INPUT DATA

SOIL PROFILE

Stratum no.	Elevation of top of stratum	Soil types: Active side	Soil types: Passive side
1	264.00	1 Fill	1 Fill
2	255.00	2 Glacial	2 Glacial

SOIL PROPERTIES

-- Soil type -- No.	Description (Datum elev.)	Bulk density lb/ft3	Young's Modulus Eh,lb/ft2 (dEh/dy)	At rest coeff. Ko (dKo/dy)	Consol state. NC/OC (Nu)	Active limit Ka (Kac)	Passive limit Kp (Kpc)	Cohesion lb/ft2 (dc/dy)
1	Fill	120.0	0	0.500	NC	0.333	3.000	
			(60000)		(0.250)	(0.000)	(0.000)	
2	Glacial	125.0	120000	0.500	OC	0.260	5.000	
					(0.250)	(0.000)	(0.000)	

Additional soil parameters associated with Ka and Kp

------- Soil type ------- No.	Description	--- parameters for Ka --- Soil friction angle	Wall adhesion coeff.	Back-fill angle	--- parameters for Kp --- Soil friction angle	Wall adhesion coeff.	Back-fill angle
1	Fill	30.03	0.000	0.00	30.00	0.000	0.00
2	Glacial	35.97	0.000	0.00	35.89	0.210	0.00

GROUND WATER CONDITIONS

Density of water = 62.40 lb/ft3

	Active side	Passive side
Initial water table elevation	254.00	254.00

Automatic water pressure balancing at toe of wall : No

Water press. profile no.	Active side: Point no.	Elev. ft	Piezo elev. ft	Water press. lb/ft2	Passive side: Point no.	Elev. ft	Piezo elev. ft	Water press. lb/ft2
1	1	254.00	254.00	0.0	1	245.00	245.00	0.0
2	1	254.00	254.00	0.0	1	247.00	247.00	0.0

WALL PROPERTIES

Elevation of toe of wall = 244.50
Maximum finite element length = 1.20
Youngs modulus of wall E = 4.1700E+09 lb/ft2
Moment of inertia of wall I = 0.014700 ft4/ft run
E.I = 6.1299E+07 lb.ft2/ft run

STRUTS and ANCHORS

Strut/ anchor no.	Elev.	Strut spacing ft	X-section area of strut sq.ft	Youngs modulus lb/ft2	Free length ft	Inclin -ation (degs)	Pre-stress /strut lb	Tension allowed
1	259.50	20.00	0.180000	4.176E+09	25.00	0.00	0	No
2	245.00	6.00	0.030000	4.176E+09	0.10	0.00	0	No
3	249.00	20.00	0.180000	4.176E+09	25.00	0.00	0	No

SURCHARGE LOADS

Surcharge no.	Elev.	Distance from wall	Length parallel to wall	Width perpend. to wall	Surcharge ----- lb/ft2 ----- Near edge	Far edge	Equiv. soil type
1	264.00	18.50(A)	100.00	8.50	2940.00	=	N/A

Note: A = Active side, P = Passive side

CONSTRUCTION STAGES

Construction stage no.	Stage description
1	Apply surcharge no.1 at elevation 264.00
2	Install strut or anchor no.2 at elevation 245.00
3	Excavate to elevation 257.50 on PASSIVE side
4	Install strut or anchor no.1 at elevation 259.50
5	Apply water pressure profile no.2
	No analysis at this stage
6	Excavate to elevation 247.00 on PASSIVE side
7	Install strut or anchor no.3 at elevation 249.00
8	Apply water pressure profile no.1
	No analysis at this stage
9	Excavate to elevation 245.00 on PASSIVE side

FACTORS OF SAFETY and ANALYSIS OPTIONS

Type of structure - Retaining wall

Stability analysis:
Method of analysis - Strength Factor method
Factor on soil strength for calculating wall depth = 1.00
Factor on soil strength for calculating tie force = 1.00

Parameters for undrained strata:
Minimum equivalent fluid density = 0.00 lb/ft3
Maximum depth of water filled tension crack = 0.00 ft

Bending moment and displacement calculation:
Method - Subgrade reaction model using Influence Coefficients
Open Tension Crack analysis? - No
Non-linear Modulus Parameter (L) = 0 ft

Boundary conditions:
Length of wall (normal to plane of analysis) = 1000.00 ft

Width of excavation on active side of wall = 20.00 ft
Width of excavation on passive side of wall = 20.00 ft

Distance to rigid boundary on active side = 20.00 ft
Distance to rigid boundary on passive side = 20.00 ft

OUTPUT OPTIONS

Results to be stored on disk? - Yes
Results to be output on the printer? - No

Stage no.	Stage description	Output options: Displacement Bending mom. Shear force	Active, Passive pressures	Graph. output
1	Apply surcharge no.1 at elev. 264.00	Yes	Yes	Yes
2	Install strut no.2 at elev. 245.00	Yes	Yes	Yes
3	Excav. to elev. 257.50 on PASSIVE side	Yes	Yes	Yes
4	Install strut no.1 at elev. 259.50	No	No	No
5	Apply water pressure profile no.2	Yes	Yes	Yes
6	Excav. to elev. 247.00 on PASSIVE side	Yes	Yes	Yes
7	Install strut no.3 at elev. 249.00	Yes	Yes	Yes
8	Apply water pressure profile no.1	Yes	Yes	Yes
9	Excav. to elev. 245.00 on PASSIVE side	Yes	Yes	Yes
*	Summary output	Yes	-	Yes

Program WALLAP - Copyright (C) 2007 by DL Borin, distributed by GEOSOLVE
69 Rodenhurst Road, London SW4, UK. Tel: +44 20 8674 7251

HALEY & ALDRICH, Inc.
Program: WALLAP Version 5.04 Revision A26.B38.R33
Licensed from GEOSOLVE
Run ID. 2007-1015-Cell R railroad
GE Fletcher
Cell R at railroad

| Sheet No.
| Job No. 32608
| Made by : DRS
| Date:28-12-2007
| Checked :

Units: lb,ft

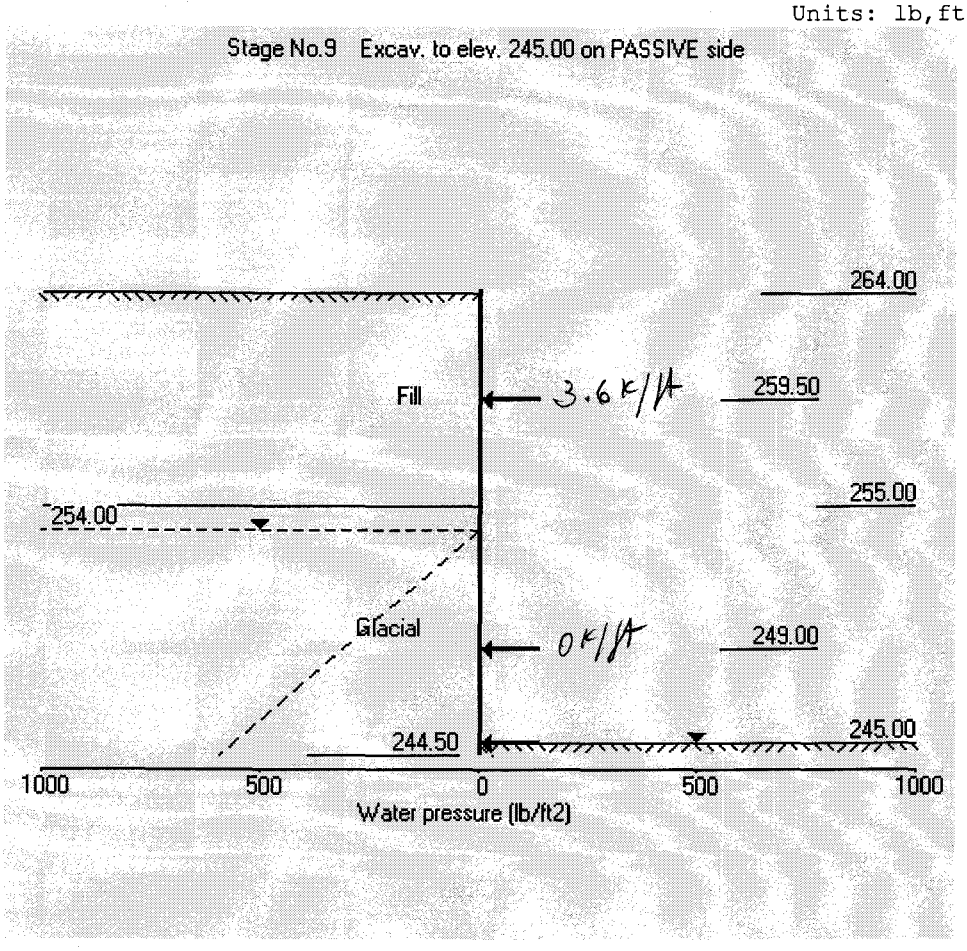

HALEY & ALDRICH, Inc.
Program: WALLAP Version 5.04 Revision A26.B38.R33
Licensed from GEOSOLVE
Run ID. 2007-1015-Cell R railroad
GE Fletcher
Cell R at railroad

| Sheet No.
| Job No. 32608
| Made by : DRS
| Date:28-12-2007
| Checked :

Units: lb,ft

Summary of results

STABILITY ANALYSIS according to Strength Factor method
Factor of safety on soil strength

Stage No.	--- G.L. --- Act.	Pass.	Strut Elev.	FoS for toe elev. = 244.50: Factor of Safety	Moment equilib. at elev.	Toe elev. for FoS = 1.000: Toe elev.	Wall Penetr -ation	Strut force for F=1.000: Strut force lb/ft run
1	264.00	264.00	Cant.		Conditions unsuitable for FoS calc.			
2	264.00	264.00			No analysis at this stage			
3	264.00	257.50	245.00		Conditions unsuitable for FoS calc.			
4	264.00	257.50			No analysis at this stage			

All remaining stages have more than one strut - FoS calculation n/a

HALEY & ALDRICH, Inc.
Program: WALLAP Version 5.04 Revision A26.B38.R33
Licensed from GEOSOLVE
Run ID. 2007-1015-Cell R railroad
GE Fletcher
Cell R at railroad

| Sheet No.
| Job No. 32608
| Made by : DRS
| Date:28-12-2007
| Checked :

Units: lb,ft

Summary of results

BENDING MOMENT and DISPLACEMENT CALCULATION - Assumptions:
Subgrade reaction model - Boussinesq Influence coefficients
Soil deformations are elastic until the active or passive limit is reached
Open Tension Crack analysis - No
Length of wall perpendicular to section = 1000.00ft

Rigid boundaries: Active side 20.00 from wall
Passive side 20.00 from wall

Bending moment, shear force and displacement envelopes

Node no.	Y coord	Displacement maximum ft	Displacement minimum ft	Bending moment maximum lb.ft/ft	Bending moment minimum lb.ft/ft	Shear force maximum lb/ft	Shear force minimum lb/ft
1	264.00	0.051	-0.001	0.0	-0.0	0.0	0.0
2	262.80	0.048	-0.001	6.8	0.0	53.5	0.0
3	261.60	0.044	-0.000	145.5	0.0	170.0	0.0
4	260.55	0.043	-0.000	390.9	0.0	297.4	0.0
5	259.50	0.041	0.000	790.2	0.0	464.2	-3131.9
6	258.50	0.039	0.000	1109.2	-2242.7	604.4	-2932.1
7	257.50	0.038	0.000	1833.5	-5054.9	844.2	-2692.3
8	256.88	0.037	0.000	2400.6	-6683.4	948.0	-2518.1
9	256.25	0.036	0.000	2995.6	-8196.2	931.8	-2323.3
10	255.63	0.035	0.000	3567.4	-9556.3	793.2	-2110.9
11	255.00	0.033	0.000	4001.1	-10797.0	557.9	-1880.6
12	254.00	0.031	0.000	4412.6	-12481.8	187.8	-1563.0
13	253.00	0.029	0.000	4420.8	-13874.0	0.0	-1184.5
14	252.00	0.027	0.000	4142.6	-14829.2 Max	0.0	-717.3
15	250.80	0.023	0.000	3527.7	-15301.1	7.7	-590.9
16	249.90	0.021	0.000	2944.7	-15023.5	670.8	-678.4
17	249.00	0.018	0.000	2308.0	-14099.6	1445.6	-710.7
18	248.00	0.014	0.000	1595.3	-12257.7	2439.8	-683.4
19	247.00	0.011	0.000	942.8	-9351.3	3576.3	-590.8
20	246.00	0.007	0.000	415.1	-5237.2	4779.1	-434.1
21	245.00	0.003	0.000	229.5	0.0	6204.0	-805.3
22	244.50	0.003	0.000	0.0	-0.0	0.0	-0.0

Maximum and minimum bending moment and shear force at each stage

Stage no.	Bending moment maximum lb.ft/ft	elev.	Bending moment minimum lb.ft/ft	elev.	Shear force maximum lb/ft	elev.	Shear force minimum lb/ft	elev.
1	380.3	255.63	-0.0	264.00	75.9	259.50	-51.1	254.00
2	No calculation at this stage							
3	4420.8	253.00	-0.0	244.50	948.0	256.88	-710.7	249.00
4	No calculation at this stage							
5	No calculation at this stage							
6	788.5	259.50	-15206.8	250.80	5652.7	245.00	-3120.9	259.50
7	No calculation at this stage							
8	No calculation at this stage							
9	790.2	259.50	-15301.1	250.80	6204.0	245.00	-3131.9	259.50

54 of 83

Summary of results (continued)

Maximum and minimum displacement at each stage

Stage no.	Displacement maximum ft	elev.	Displacement minimum ft	elev.	Stage description
1	0.003	244.50	-0.001	264.00	Apply surcharge no.1 at elev. 264.00
2	No calculation at this stage				Install strut no.2 at elev. 245.00
3	0.051	264.00	0.000	264.00	Excav. to elev. 257.50 on PASSIVE side
4	No calculation at this stage				Install strut no.1 at elev. 259.50
5	No calculation at this stage				Apply water pressure profile no.2
6	0.048	264.00	0.000	264.00	Excav. to elev. 247.00 on PASSIVE side
7	No calculation at this stage				Install strut no.3 at elev. 249.00
8	No calculation at this stage				Apply water pressure profile no.1
9	0.048	264.00	0.000	264.00	Excav. to elev. 245.00 on PASSIVE side

Strut forces at each stage (horizontal components)

Stage no.	Strut no. 1 at elev. 259.50 lb/ft run	lb/strut	Strut no. 2 at elev. 245.00 lb/ft run	lb/strut	Strut no. 3 at elev. 249.00 lb/ft run	lb/strut
3	---	---	slack	slack	---	---
6	3584.5	71689.3	6289.3	37735.6	---	---
9	3596.0	71920.4	7009.3	42055.9	63.7	1274.6

Units: lb,ft

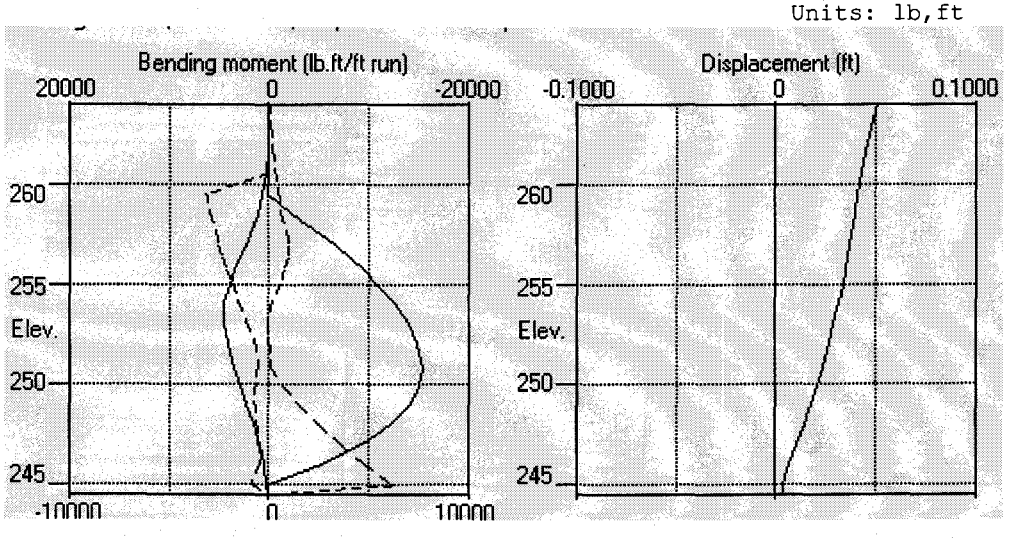

APPENDIX B

BRACING DESIGN

HALEY & ALDRICH	Calculations	File No.	32608-000
		Sheet	56 of 83
Client	ARCADIS BBL	Date	6/1/07
Project	FLETCHER'S PAINT WORKS	Computed By	FPM
Subject	STRUT DESIGNATIONS	Checked By	

Upper Level Strut Forces Diagram 100% Design

w=8 k/ft

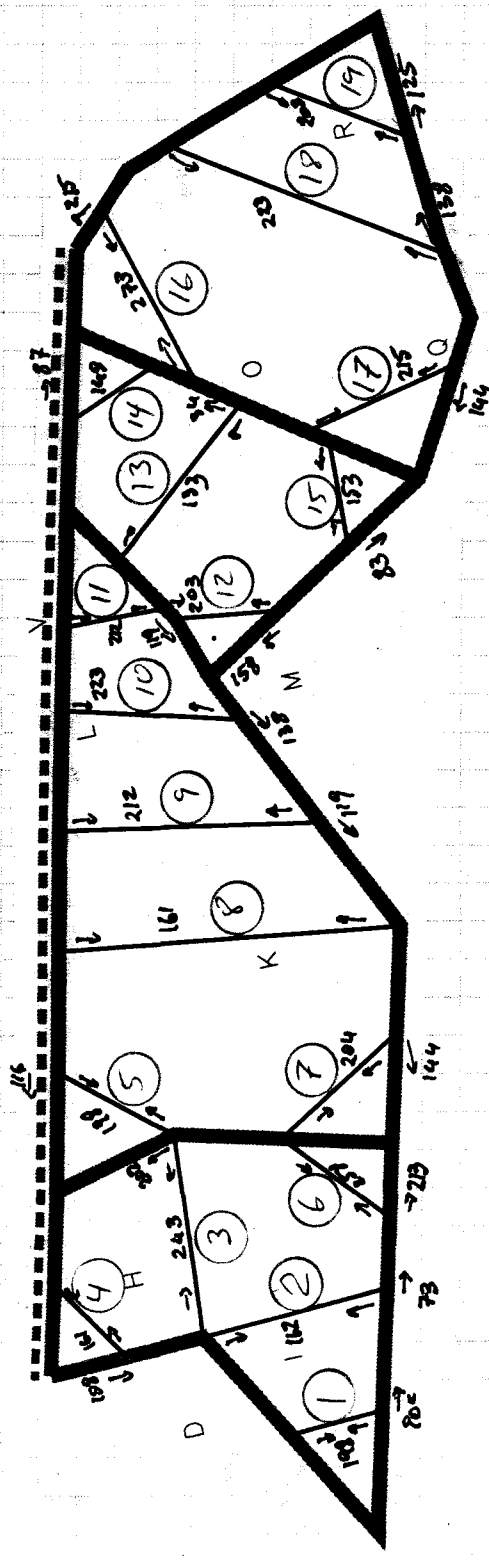

(#) - STRUT NUMBER

Base strut design on longest strut with heighest axial force. Design for

Strut # 16 Length 33 ft

Strut # 18 Length 49 ft

Strut # 8 Length 57 ft

HALEY & ALDRICH

CALCULATIONS

from Mathcad R13

$\omega_{BR1} := 16$ kips/ft

Example calculation
See Excel spreadsheet for complete design.

WALE-DESIGN: Formula Sheet

$L_u := 22$ ft, Unbraced length.

$M_{BR1AB} := L_u^2 \cdot \frac{\omega_{BR1}}{8}$ $M_x := M_{BR1AB}$ $M_x = 968$ kip-ft, From Hand Calculations.

$P_{axBR1AB} := 0$ $P_{ax} := P_{axBR1AB}$ $P_{ax} = 0$ kip, From Hand Calculations

$K := 1.0$ $F_y := 50$ ksi $E := 29000$ ksi

$C_c := \sqrt{\frac{2 \cdot \pi^2 \cdot E}{F_y}}$ $C_c = 106.999$

Design section using the attached database of AISC steel shapes...

Reference:K:\Soil-Structure\Mathcad\Steel-shapes.xmcd

Try := "W24x131"

$$\text{index}(n, \text{Try}) := \begin{cases} n & \text{if } \text{Try} = \text{Shape}_n \\ \text{index}(n+1, \text{Try}) & \text{otherwise} \end{cases}$$

$i := \text{index}(0, \text{Try})$

$A := \text{Area}_i$	$A = 38.5$	*Cross sectional area of selected shape, in^2.*
$d := d_i$	$d = 24.48$	*Depth of member, in.*
$S_x := S_{x_i}$	$S_x = 329$	*Section modulus of selected shape about x-x axis, in^3.*
$S_y := S_{y_i}$	$S_y = 53$	*Section modulus of selected shape about y-y axis, in^3.*
$b_f := b_{f_i}$	$b_f = 12.855$	*Flange width, in.*
$I_x := I_{x_i}$	$I_x = 4020.0$	*Moment of Inertia of selected shape about x-x axis, in^4.*
$I_y := I_{y_i}$	$I_y = 340$	*Moment of Inertia of selected shape about y-y axis, in^4.*
$r_x := r_{x_i}$	$r_x = 10.2$	*Radius of gyration of selected shape about x-x axis, in.*
$r_y := r_{y_i}$	$r_y = 2.97$	*Radius of gyration of selected shape about y-y axis, in.*
$\omega_{sw} := \text{weight}_i$	$\omega_{sw} = 131$	*Self-weight of section, lb/ft.*
$r := \min(r_x, r_y)$	$r = 2.97$	

HALEY & ALDRICH

CALCULATIONS

from Mathcad R13

$L_{bs} := \frac{L_u}{2}$ ft, Beam Seat spacing $\quad L_{bs1} := L_{bs}$

$$M_y := \frac{\frac{\omega_{sw}}{1000} \cdot L_{bs}^2}{8} \qquad M_y = 1.981 \quad \text{kip-ft}$$

$$f_a := \frac{P_{ax}}{A} \qquad f_a = 0 \quad \text{ksi}$$

$$F_a := \begin{cases} \dfrac{\left[1 - \dfrac{\left(\dfrac{K \cdot L_{bs} \cdot 12}{r}\right)^2}{2 \cdot C_c^2}\right] \cdot F_y}{\dfrac{5}{3} + \dfrac{3}{8} \cdot \left(\dfrac{K \cdot L_{bs} \cdot 12}{r \cdot C_c}\right) - \dfrac{1}{8} \cdot \left(\dfrac{K \cdot L_{bs} \cdot 12}{r \cdot C_c}\right)^3} & \text{if } \dfrac{K \cdot L_{bs} \cdot 12}{r} \le C_c \\ \dfrac{12 \cdot \pi^2 \cdot E}{23 \cdot \left(\dfrac{K \cdot L_{bs} \cdot 12}{r}\right)^2} & \text{otherwise} \end{cases}$$

$$\frac{K \cdot L_{bs} \cdot 12}{r} = 44.444 \qquad C_c = 106.999$$

$$F_a = 25.193 \quad \text{ksi}$$

$$F_{ex} := \frac{12 \cdot \pi^2 \cdot E}{23 \cdot \left(\frac{K \cdot L_u \cdot 12}{r_x}\right)^2} \qquad F_{ex} = 222.917 \quad \text{ksi}$$

$$F_{ey} := \frac{12 \cdot \pi^2 \cdot E}{23 \cdot \left(\frac{K \cdot L_{bs} \cdot 12}{r_y}\right)^2} \qquad F_{ey} = 75.599 \quad \text{ksi}$$

$$f_{bx} := \frac{M_x \cdot 12}{S_x} \qquad f_{bx} = 35.307 \quad \text{ksi} \qquad f_{by} := \frac{M_y \cdot 12}{S_y} \qquad f_{by} = 0.449 \quad \text{ksi}$$

$$L_c := \min\left[\frac{76 \cdot b_f}{\sqrt{F_y}}, \frac{20000}{\left(\frac{d}{A}\right) \cdot F_y}\right] \cdot \frac{1}{12} \qquad L_c = 11.514 \quad \text{ft}$$

Weld compression flange to excavation support wall every L_c or where feasible (if spacing is less than L_c) along the wale.

$$F_{bx} := 1.2 \cdot 0.66 \cdot F_y \qquad F_{bx} = 39.6 \quad \text{ksi} \qquad F_{by} := 1.2 \cdot 0.75 \cdot F_y \qquad F_{by} = 45 \quad \text{ksi}$$

Check Combined Stress, AISC Section H:

Maximum of for $f_a/F_a \geq 0.15$

$$CS := \frac{f_a}{F_a} + \frac{f_{bx}}{\left(1 - \frac{f_a}{F_{ex}}\right) \cdot F_{bx}} + \frac{f_{by}}{\left(1 - \frac{f_a}{F_{ey}}\right) \cdot F_{by}} \qquad CS = 0.902$$

$$OK := \begin{cases} \text{"YES"} & \text{if } CS \le 1 \\ \text{"NO"} & \text{otherwise} \end{cases} \qquad OK = \text{"YES"}$$

If $f_a/F_a \leq 0.15$

$$CS := \frac{f_a}{0.6 F_y} + \frac{f_{bx}}{F_{bx}} + \frac{f_{by}}{F_{by}} \qquad CS := \frac{f_a}{F_a} + \frac{f_{bx}}{F_{bx}} + \frac{f_{by}}{F_{by}}$$

Struts Upper Level

Strut (#)	K	Fy (ksi)	Ey (ksi)	Cc	Member	Angle	ω = Tributary Length	8 *F (k)	klf V (k)	M (k-ft)	Lu (ft)	Lbs (ft)	Shape	3 Weight (lb)	4 Depth (in)	5 bf (in)	6 tw (in)	7 tf (in)	8 k (in)	9 k1 (in)	10 Area (in^2)	11 J (in^4)	12 Iy (in^4)	13 Ix (in^4)	14 Sy (in^3)	15 Sx (in^3)	16 ry (in)	17 rx (in)	18 rT (in)	19 L_c (ft) Gr. 50	fa (ksi)	fbx (ksi)	My (k-ft)	fby (ksi)	Lx (ft)
16 and Cell H Lower Level Struts	1	46	29000	111.6	33-ft	38	21	341.1	0	0.00	33	33	**18x1/2**	93.45	18	0	0.5	0.5	0	0	27.48894	0	1053	1053	117	117	6.18921	6.18921	0	0	12.41	0.00	12.72	1.30	33
18	1	46	29000	111.6	49-ft	52	22	335.0	0	0.00	49	49	**20x1/2**	104.13	20	0	0.5	0.5	0	0	30.63053	0	1457	1457	145.7	145.7	6.896878	6.896878	0	0	10.94	0.00	31.25	2.57	49
8	1	46	29000	111.6	57-ft	Hand Calc F		268.5	0	0.00	57	57	**20x1/2**	104.13	20	0	0.5	0.5	0	0	30.63053	0	1457	1457	145.7	145.7	6.896878	6.896878	0	0	8.77	0.00	42.29	3.48	57

*The axial strut force includes an increase in value due to bending and temperature effects.

Struts Lower Level

Strut (#)	K	Fy (ksi)	Ey (ksi)	Cc	Member	Angle	ω = Tributary Length	5 *F (k)	klf V (k)	M (k-ft)	Lu (ft)	Lbs (ft)	**Shape**	3 Weight (lb)	4 Depth (in)	5 bf (in)	6 tw (in)	7 tf (in)	8 k (in)	9 k1 (in)	10 Area (in^2)	11 J (in^4)	12 Iy (in^4)	13 Ix (in^4)	14 Sy (in^3)	15 Sx (in^3)	16 ry (in)	17 rx (in)	18 rT (in)	19 L_c (ft) Gr. 50	fa (ksi)	fbx (ksi)	My (k-ft)	fby (ksi)	Lx (ft)
16	1	46	29000	111.6	33-ft	38	21	213.2	0	0.00	33	33	**18x1/2**	93.45	18	0	0.5	0.5	0	0	27.48894	0	1053	1053	117	117	6.18921	6.18921	0	0	7.76	0.00	12.72	1.30	33
18	1	46	29000	111.6	49-ft	52	22	209.4	0	0.00	49	49	**18x1/2**	93.45	18	0	0.5	0.5	0	0	27.48894	0	1053	1053	117	117	6.18921	6.18921	0	0	7.62	0.00	28.05	2.88	49
8	1	46	29000	111.6	57-ft	Hand Calc F		168.0	0	0.00	57	57	**18x1/2**	93.45	18	0	0.5	0.5	0	0	27.48894	0	1053	1053	117	117	6.18921	6.18921	0	0	6.12	0.00	37.95	3.89	57

*The axial strut force includes an increase in value due to bending and temperature effects.

Wale Design

Cell	K	Fy (ksi)	Ey (ksi)	Cc	Member	Angle	ω = Tributary Length	Upper and lower 8 F (k)	klf V (k)	M (k-ft)	klf Lu (ft)	Lbs (ft)	**Shape**	3 Weight (lb)	4 Depth (in)	5 bf (in)	6 tw (in)	7 tf (in)	8 k (in)	9 k1 (in)	10 Area (in^2)	11 J (in^4)	12 Iy (in^4)	13 Ix (in^4)	14 Sy (in^3)	15 Sx (in^3)	16 ry (in)	17 rx (in)	18 rT (in)	19 L_c (ft) Gr. 50	fa (ksi)	fbx (ksi)	My (k-ft)	fby (ksi)	Lx (ft)
I/H	1	50	29000	107.0		0	0	202.0	80	400	20	12	**W24x146**	146	24.74	12.9	0.65	1.09	1.875	1.0625	43	13.4	391	4580	60.5	371	3.01	10.3	3.43	11.55412	4.7	12.94	2.63	0.52	20
O/R	1	50	29000	107.0		0	0	263.0	88	484	22	12	**W24x146**	146	24.74	12.9	0.65	1.09	1.875	1.0625	43	13.4	391	4580	60.5	371	3.01	10.3	3.43	11.55412	6.12	15.65	2.63	0.52	22
K	1	50	29000	107.0		0	0	257.0	92	529	23	12	**W24x146**	146	24.74	12.9	0.65	1.09	1.875	1.0625	43	13.4	391	4580	60.5	371	3.01	10.3	3.43	11.55412	5.98	17.11	2.63	0.52	23

Member	Ly (ft)	K*Lx/rx	K*Ly/ry	Max K*L/r	Slender Column	Fa (ksi)	OK Axial Stress	Lc (ft)	Pipe or W flange	Compact ?	Is Lc>Ly	Overstress?	Is fa/Fa<15%?	F'ex (ksi)	F'ey (ksi)	Fbx (ksi), W-flange	Fbx (ksi), Pipe	Fbx (ksi)	Fby (ksi)	fa/Fa	fbx/Fbx	fby/Fby	Combined Stresses	Combined Stress OK?	fv (ksi)	h (in)	h/tw	Fv (ksi)	Shear OK?
33-ft	33	64.0	64.0	64.0	NO	20.68	**YES**	100000.0	Pipe	YES	YES	0%	NO	36.48	36.48	0.00	30.36	30.36	30.36	0.60	0	0.05	0.67	**YES**	0.00	18.000	36.0	18.40	**YES**
49-ft	49	85.3	85.3	85.3	NO	17.16	**YES**	100000.0	Pipe	YES	YES	0%	NO	20.54	20.54	0.00	30.36	30.36	30.36	0.64	0	0.09	0.82	**YES**	0.00	20.000	40.0	18.40	**YES**
57-ft	57	99.2	99.2	99.2	NO	14.55	**YES**	100000.0	Pipe	YES	YES	0%	NO	15.18	15.18	0.00	30.36	30.36	30.36	0.61	0	0.12	0.88	**YES**	0.00	20.000	40.0	18.40	**YES**

d temperature

Member	Ly (ft)	K*Lx/rx	K*Ly/ry	Max K*L/r	Slender Column	Fa (ksi)	OK Axial Stress	Lc (ft)	Pipe or W flange	Compact ?	Is Lc>Ly	Overstress?	Is fa/Fa<15%?	F'ex (ksi)	F'ey (ksi)	Fbx (ksi), W-flange	Fbx (ksi), Pipe	Fbx (ksi)	Fby (ksi)	fa/Fa	fbx/Fbx	fby/Fby	Combined Stresses	Combined Stress OK?	fv (ksi)	h (in)	h/tw	Fv (ksi)	Shear OK?
33-ft	33	64.0	64.0	64.0	NO	20.68	**YES**	100000.0	Pipe	YES	YES	0%	NO	36.48	36.48	0.00	30.36	30.36	30.36	0.38	0	0.05	0.43	**YES**	0.00	18.000	36.0	18.40	**YES**
49-ft	49	95.0	95.0	95.0	NO	15.36	**YES**	100000.0	Pipe	YES	YES	0%	NO	16.55	16.55	0.00	30.36	30.36	30.36	0.50	0	0.1	0.68	**YES**	0.00	18.000	36.0	18.40	**YES**
57-ft	57	110.5	110.5	110.5	NO	12.22	**YES**	100000.0	Pipe	YES	YES	0%	NO	12.23	12.23	0.00	30.36	30.36	30.36	0.51	0	0.13	0.77	**YES**	0.00	18.000	36.0	18.40	**YES**

d temperature

Member	Ly (ft)	K*Lx/rx	K*Ly/ry	Max K*L/r	Slender Column	Fa (ksi)	OK Axial Stress	Lc (ft)			Is Lc>Ly	Overstress?	Is fa/Fa<15%?	F'ex (ksi)	F'ey (ksi)	Fbx (ksi), W-flange	Fbx (ksi), Pipe	Fbx (ksi)	Fby (ksi)	fa/Fa	fbx/Fbx	fby/Fby	Combined Stresses	Combined Stress OK?	fv (ksi)	h (in)	h/tw	Fv (ksi)	Shear OK?
	12	23.3	47.8	47.8	NO	24.68	**YES**	11.6			NO	20%	NO	275.04	65.25	34.10	check	34.10	45.00	0.20	0.38	0.02	0.60	**YES**	4.97	20.990	32.3	20.00	**YES**
	12	25.6	47.8	47.8	NO	24.68	**YES**	11.6			NO	20%	NO	227.31	65.25	31.00	check	31.00	45.00	0.25	0.51	0.02	0.78	**YES**	5.47	20.990	32.3	20.00	**YES**
	12	26.8	47.8	47.8	NO	24.68	**YES**	11.6			NO	20%	NO	207.97	65.25	29.65	check	29.65	45.00	0.25	0.58	0.02	0.86	**YES**	5.72	20.990	32.3	20.00	**YES**

APPENDIX C

DETAILS DESIGN

TOE PIN DETAIL

HALEY & ALDRICH

Calculations

Client	ARCADIS BBL	File No.	32608-000
Project	FLETCHER'S PAINT WORKS	Sheet	63 of 83
Subject	CELL H C RAILROAD SPTC WALL DESIGN	Date	6/1/07
		Computed By	FJM
		Checked By	

TOE PIN DESIGN

FROM WALLAP, UNIFORM LOAD ON PIN IS

18.2 KIPS / FT @ 5 FT SPACING

∴ LOAD IN PIN IS

18.2 (5) = 91 KIPS / PIN IN SHEAR

→ SOLVE FOR REQUIRED AREA

$V_{ALLOWABLE} = 0.4 F_y A$

$F_y = 60$
$V = 91 \text{ KIPS}$

$91 = 0.4 (60) A_{REQ}$

$A_{REQ} = 3.8 \text{ in}^2$

SAY # 18 REBAR $A_{18} = 3.9 \text{ in}^2$

$3.9 > 3.8$ OK

CONNECTION DETAIL DESIGN

Connection Detail Strut - Wale Connection

Bottom Level $V_{max} = 171^k$

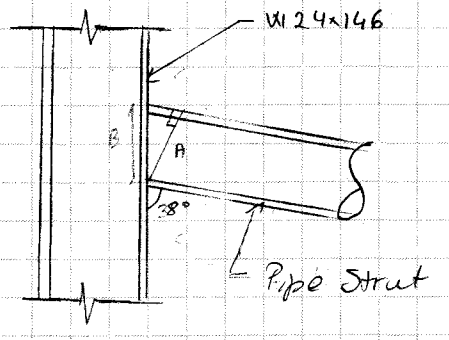

Maximum shear force $V = 171^k$ (From Free Body Values) Bottom Brace

5/16" Weld $L_{req} = \dfrac{171}{\dfrac{5/16 \times 70 \times 0.3}{\sqrt{2}}} = 36.9''$

Since the strut is cut at an angle of 38°, the length of weld available will be equal to the projected depth of strut.

B - Projected strut depth $= \dfrac{\text{Perimeter of strut}}{\sin 38} = \dfrac{2\pi r}{\sin 38} = \dfrac{2 \times 3.14 \times 9''}{\sin 38}$

Total weld length available: $= 91$ in

$L_{avai.} = 91$ in $> L_{req} = 36.9''$ ⇒ O.K.

Weld strut to wale 5/16" all around

HALEY & ALDRICH

Calculations

Client	Arcadis BBL	File No.	32608-003
Project	Fletcher Paint Work Superfund Site	Sheet	66 of 83
Subject	Mill Street connection Details	Date	10/23/07
		Computed By	BV
		Checked By	DRS

Upper Level $V_{uMax} = 215^k$

Weld required

5/16" Weld $L_d = \dfrac{215}{\frac{5/16 \times 70 \times 0.3}{\sqrt{2}}} = 46.3 \text{ in}$

Weld Available:

Same as before: $L_{avai} = 91 \text{ in} > 46.3$ O.K.

Result: Weld strut all around.

Connection Detail at Wale Connection

Case 1

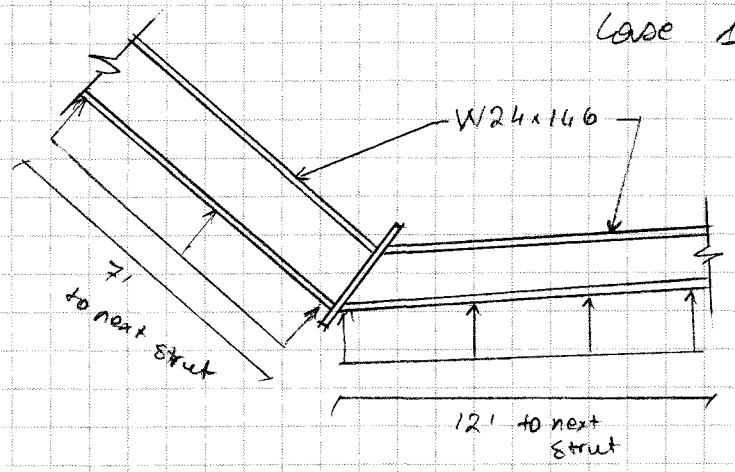

$P_{max} = 12' \times 8^{k/ft} = 96^k$

5/16" weld.

$$L_d = \frac{96}{\frac{5/16 \times 70 \times 0.3}{\sqrt{2}}} = 20.1'' \text{ Weld}$$

W24x146 Weld top & bottom of flange

$L_{available} = 24 \times 2 = 48'' > 20.1''$ O.K.

Connection Detail at wale connection
Case 2

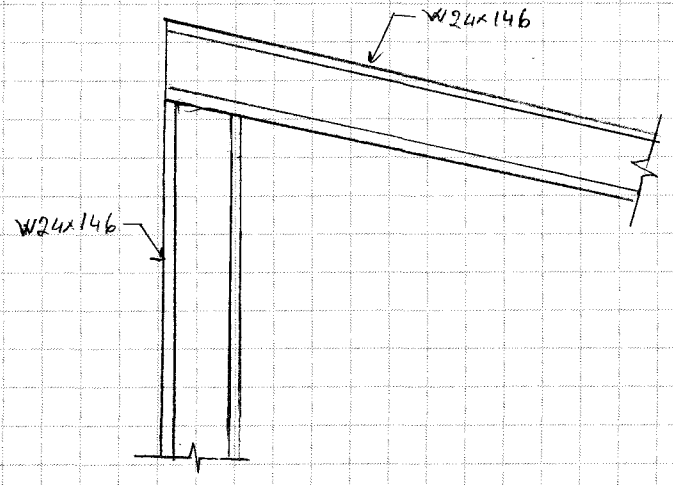

Max shear force, from wale design $V = 92$ kips

$$L_d = \frac{92}{\frac{5/16 \times 70 \times 0.3}{\sqrt{2}}} = 20''$$

Weld W24 top & bottom of flange

$L_{avai} = 24 \times 2 = 48'' > 20''$ O.K.

HALEY & ALDRICH	CALCULATIONS	File No.	32608-000
		Sheet	69 of 83
Client	Arcadis BBL	Date	12/31/07
Project	Fletcher's Paint Works Superfund Site	Computed By	BV
Subject	Support of Excavation 100% Design – Mill Street	Checked By	DRS

BEAM SEAT DETAIL DESIGN

HALEY & ALDRICH

Calculations

Client	Arcadis BBL	File No.	32608-003
Project	Fletcher Point superfund site	Sheet	70 of 83
Subject	Mill Street Connection Details	Date	10/23/07
		Computed By	BV
		Checked By	DRS

Beam Seat Detail

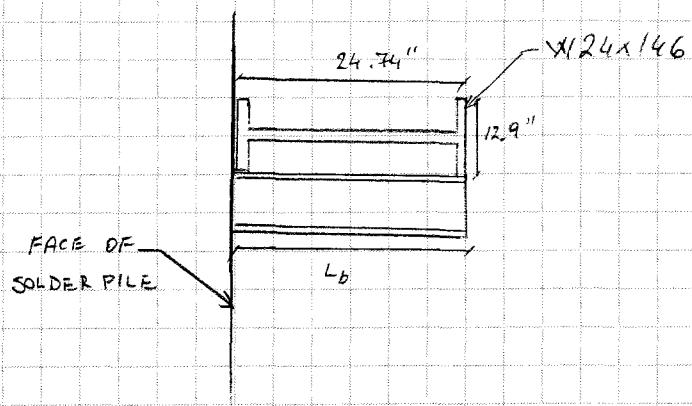

Beam seat supports the weight of wale and the strut (half of its length).

Wale W24x146 Strut HP14x73

Force on wale

$P = L_w \cdot W_w + L_s \cdot W_s$

$= 12' \times 0.146 + \frac{57}{2} \times 0.073$

$= 3.8$ kips

Shear Force = 3.8^k

$$L_d = \frac{3.8}{\frac{5/16 \times 70 \times 0.3}{\sqrt{2}}} = 1''$$

Weld beam seat to solder pile top & bottom

CALCULATIONS

from Mathcad 2000 Professional

File No. 32608-003
Date 21/31/2007
Computed By BV
Checked By _DRS

$F_y := 50$ ksi $\qquad L_{bs} := 25$ ft

UPPER LEVEL WALE:

Local Web Yielding:

Design section using the attached database of AISC steel shapes...

Reference:K:\Soil-Structure\Mathcad\w-shapes.mcd

Try := "W24x146"

$$\text{index}(n) := \begin{cases} n & \text{if } \text{Try} = \text{Shape}_n \\ \text{index}(n+1) & \text{otherwise} \end{cases}$$

This program finds the location of "Try" in the built-in database of AISC steel shapes referenced by this Mathcad worksheet, and then returns the section's location in the matrix as the variable "i".

$i := \text{index}(0)$

$t_w := t_{w_i}$	$t_w = 0.65$	*Web thickness, in.*
$t_f := t_{f_i}$	$t_f = 1.09$	*Flange thickness, in.*
$k := k_i$	$k = 1.875$	*Clear distance betweem flange and fillets, in.*
$d := d_i$	$d = 24.74$	*Depth of wale, in.*
$b_f := b_{f_i}$	$b_f = 12.9$	*Flange width, in.*

$N := 20$	$N = 20$	in
$R := 200$	$R = 200$	kip

Check when force is applied in middle of wale:

$$OK := \begin{cases} \text{"Yes"} & \text{if } \dfrac{R}{t_w \cdot (N + 5 \cdot k)} \le 0.66 \cdot F_y \\ \text{"No"} & \text{otherwise} \end{cases} \qquad \frac{R}{t_w \cdot (N + 5 \cdot k)} = 10.475 \qquad OK = \text{"Yes"} \qquad \text{(K1-2)}$$

Web Crippling:

Check when force is applied in middle of wale:

$$\text{Need\_Stiffners} := \begin{cases} \text{"Yes"} & \text{if } R > 67.5 \cdot t_w^2 \cdot \left[1 + 3 \cdot \left(\dfrac{N}{d}\right)\left(\dfrac{t_w}{t_f}\right)^{1.5}\right] \cdot \sqrt{F_y \cdot \dfrac{t_f}{t_w}} \\ \text{"No"} & \text{otherwise} \end{cases}$$

CALCULATIONS

from Mathcad 2000 Professional

File No. 32608-003
Date 21/31/2007
Computed By BV
Checked By _DRS

$$67.5 \cdot t_w^2 \cdot \left[1 + 3 \cdot \left(\frac{N}{d}\right)\left(\frac{t_w}{t_f}\right)^{1.5}\right] \cdot \sqrt{F_y \cdot \frac{t_f}{t_w}} = 552.784$$

Need_Stiffners = "No" (K1-4)

Sidesway Web Buckling:

Check when loaded flange is restrained from rotation:

$d_c := d - 2 \cdot k$ $\quad d_c = 20.99$ in

$l := L_{bs}$

Check when loaded flange is **not** restrained from rotation:

$$\text{Condition} := \begin{cases} \text{"True"} & \text{if } \left(\frac{d_c}{t_w}\right)\left(\frac{b_f}{l \cdot 12}\right) < 1.7 \\ \text{"False"} & \text{otherwise} \end{cases}$$

Condition = "True"

$$\text{Need\_Stiffners} := \begin{cases} \text{"No"} & \text{if Condition = "False"} \\ \text{otherwise} & \begin{cases} \text{"Yes"} & \text{if } R > \frac{6800 t_w^3}{d - 2 \cdot t_f} \cdot \left[0.4 \cdot \left[\left(\frac{d_c}{t_w}\right)\left(\frac{b_f}{l \cdot 12}\right)\right]^3\right] \\ \text{"No"} & \text{otherwise} \end{cases} \end{cases}$$

Need_Stiffners = "Yes" (K1-7)

$$\frac{6800 t_w^3}{d - 2 \cdot t_f} \cdot \left[0.4 \cdot \left[\left(\frac{d_c}{t_w}\right)\left(\frac{b_f}{l \cdot 12}\right)\right]^3\right] = 88.649$$

Compression Buckling of the Web:

$P_{bf} := R$ $\quad P_{bf} = 200$ kip

$$\text{Need\_Stiffners} := \begin{cases} \text{"Yes"} & \text{if } d_c > \frac{4100 \cdot t_w^3 \cdot \sqrt{F_y}}{P_{bf}} \\ \text{"No"} & \text{otherwise} \end{cases}$$

Need_Stiffners = "No" (K1-8)

APPENDIX D

BACKGROUND INFORMATION

SOIL PROPERTIES

HALEY & ALDRICH

CALCULATIONS

Client	ARCADIS - BBL	File No.	32608-000
Project	GE FLETCHERS' PAINT / MILL ST.	Sheet	75 of 93
Subject	SOIL PROPERTIES	Date	5/11/07
		Computed By	FPM
		Checked By	

GS. VARIES

- FILL -

EL. 255

EL. 254

- GLACIAL TILL -

TOP OF ROCK VARIES

- ROCK -

• SOIL PROPERTIES:

- FILL

N_{AVG} = SAY 10 BPF

ϕ = 30° (ATTACHED)

γ = 120 PCF (ATTACHED)

K_A = 0.333 (ATTACHED)

K_P = 3 based on (ATTACHED)
log-spiral DM-7

- GLACIAL TILL

N_{AVG} = SAY 30 BPF

ϕ : 36° (ATTACHED)

γ : 125 PCF (ATTACHED)

K_A : 0.260 (ATTACHED)

K_P : 5.0 based on (ATTACHED)
log spiral DM-7

Table F-2. N versus ϕ Relationships

N Value (blows/ft)	Relative Density	D_r (%)	Approximate $\bar{\phi}$ (degrees) (a)	(b)	
0 - 4	very loose	0 - 20	< 28	< 30	
4 - 10	loose	20 - 40	28 - 30	30 - 35	← FILL
10 - 30	medium	40 - 60	30 - 36	35 - 40	← GLACIAL TILL
30 - 50	dense	60 - 80	36 - 41	40 - 45	
> 50	very dense	80 - 100	> 41	> 45	

a - Peck, Hanson, and Thornburn, 1974, p. 310
b - Meyerhof, 1956, p. 17

The Peck, Hanson, and Thornburn approach appears to be more widely used, probably because it is more conservative. These values also are shown graphically below.

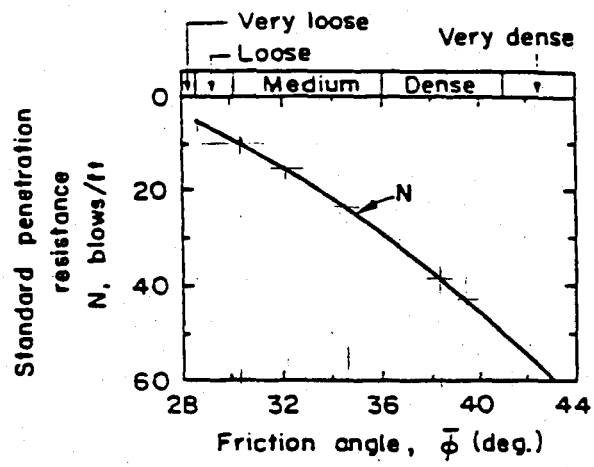

(Peck, Hanson, and Thornburn, 1974, p. 310)

Figure F-4. N versus ϕ

Again, recent research has shown that the N-ϕ relationship is also a function of the depth or overburden stress. The following is useful to interpret these more general conditions.

d. Based on Robertson and Campanella simplified interpretation

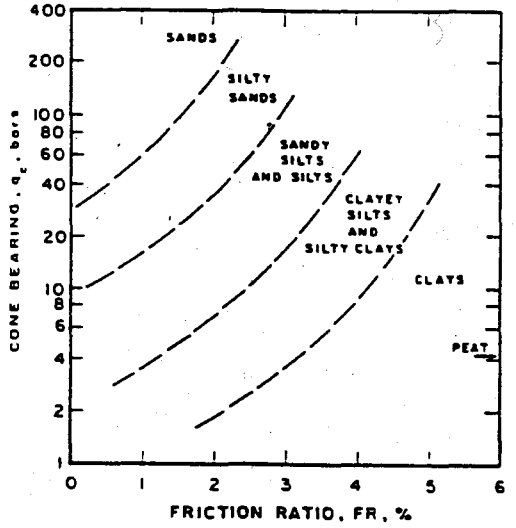

(Robertson and Campanella, 1983, p. 721)

Figure B-5. Simplified Soil Classification from Electric Friction CPT

6. Soil unit weight

The following is representative of typical soil unit weights.

Table B-7. Typical Soil Unit Weights

Soil Type	Approximate Particle Size (mm) D_{max}	D_{min}	D_{10}	Uniformity Coefficient D_{60}/D_{10}	Void Ratio e_{max}	e_{min}	Unit Weight (lb/ft³) Dry, γ_{dry} Min.	Max.	Saturated, Min.	MAX.
Uniform granular soil										
Equal spheres (theoretical)	-	-	-	1.0	0.92	0.35	-	-	-	–
Standard Ottawa sand	0.84	0.59	0.67	1.1	0.80	0.50	92	110	93	131
Clean, uniform sand	-	-	-	1.2 to 2.0	1.00	0.40	83	118	84	136
Uniform, inorganic silt	0.05	0.005	0.012	1.2 to 2.0	1.10	0.40	80	118	81	136
Well-graded granular soil										
Silty sand	2.0	0.005	0.02	5 to 10	0.90	0.30	87	127	88	142 ← FILL
Clean, fine to coarse sand	2.0	0.05	0.09	4 to 6	0.95	0.20	85	138	86	148 & GLACIAL
Micaceous sand	-	-	-	-	1.20	0.40	76	120	77	138 TILL
Silty sand and gravel	100	0.005	0.02	15 to 300	0.85	0.14	89	146	90	155
Silty or sandy clay	2.0	0.001	0.003	10 to 30	1.80	0.25	60	135	100	147
Gap-graded silty clay w. gravel or larger	250	0.001	-	-	1.00	0.20	84	140	115	151
Well-graded gravel, sand, silt, and clay	250	0.001	0.002	25 to 1000	0.70	0.13	100	148	125	156
Clay (30 to 50% - 2μ size)	0.05	0.5μ	0.001	-	2.40	0.50	50	112	94	133
Colloidal clay (over 50% - 2μ size)	0.01	10Å	-	-	12.00	0.60	13	106	71	128
Organic silt	-	-	-	-	3.00	0.55	40	110	87	131
Organic clay (30 to 50% - 2μ size)	-	-	-	-	4.40	0.70	30	100	81	125

γ_{FILL} = 120 pcf

γ_{TILL} = 125 pcf

(Hough, 1969, pp. 34, 35)

78 g93

NOTES ON ESTIMATION
OF
SOIL PROPERTIES
FOR
FOUNDATION ENGINEERING

by
Fred H. Kulhawy
Professor of Civil Engineering
Cornell University

March 1986

HALEY & ALDRICH

CALCULATIONS

File No. 32608-003
Sheet 79 of 93
Date 12/31/07
Computed By BV
Checked By DRS

Client: ARCADIS / BBL
Project: GE FLETCHER'S PAINT / MILL ST.
Subject: SOIL PROFILE

→ Based on 30% Report Borings provided by Arcadis BBL.

Boring	Fill Bottom	Fill N_{AVG}	Fill N_{HIGH}	Fill N_{LOW}	Glacial N_{AVG}	Glacial N_{HIGH}	Glacial N_{LOW}	Rock Depth	Rock Location
MW24A	9/257.5	13	13	9	57	104	33	23/241.5	1@RR
MW24B	9/255.5	9	12	6	41	45	36	~/A	1@RR
MW24C	9/255	8	11	6	53	84	32	23/241.0	1@RR
EB07A ?	6	13	13	13	31	35	24	12.5	1@ Mill St
MW 21C ?	6.2	31	37	26	38	123	7	20.5	1@ Center
MW 22A	5/254.5	13	13	13	13	22	8	~/A	2@ Center
MW 22B	4/255.5?	~/A	~/A	~/A	24	50	8	~/A	2@ Center
MW 22C	3.5/256	8	9	7	15	39	4	28/237.5	2@ Center
MW13 - CONTW	8/255.5	NA	~A	N/A	~/A	~/A	~/A	27/236.5	3@RR
MW 23A	7/256.5	12	15	10	48	143	12	~/A	1.5@RR
MW 23B	7/256.5	16	23	9	65	173	15	~/A	1.5@RR
MW 23C	7.5/258	17	36	8	49	81	19	23/243	1.5@RR
		SAY 10			SAY 30				

DEPTH/EL

→ ASSUME BOTTOM OF FILL @ EL 255

CAL02AFH.FRP 20 November 1997

80 of 83

Use this plan for Top of Bedrock Elevations

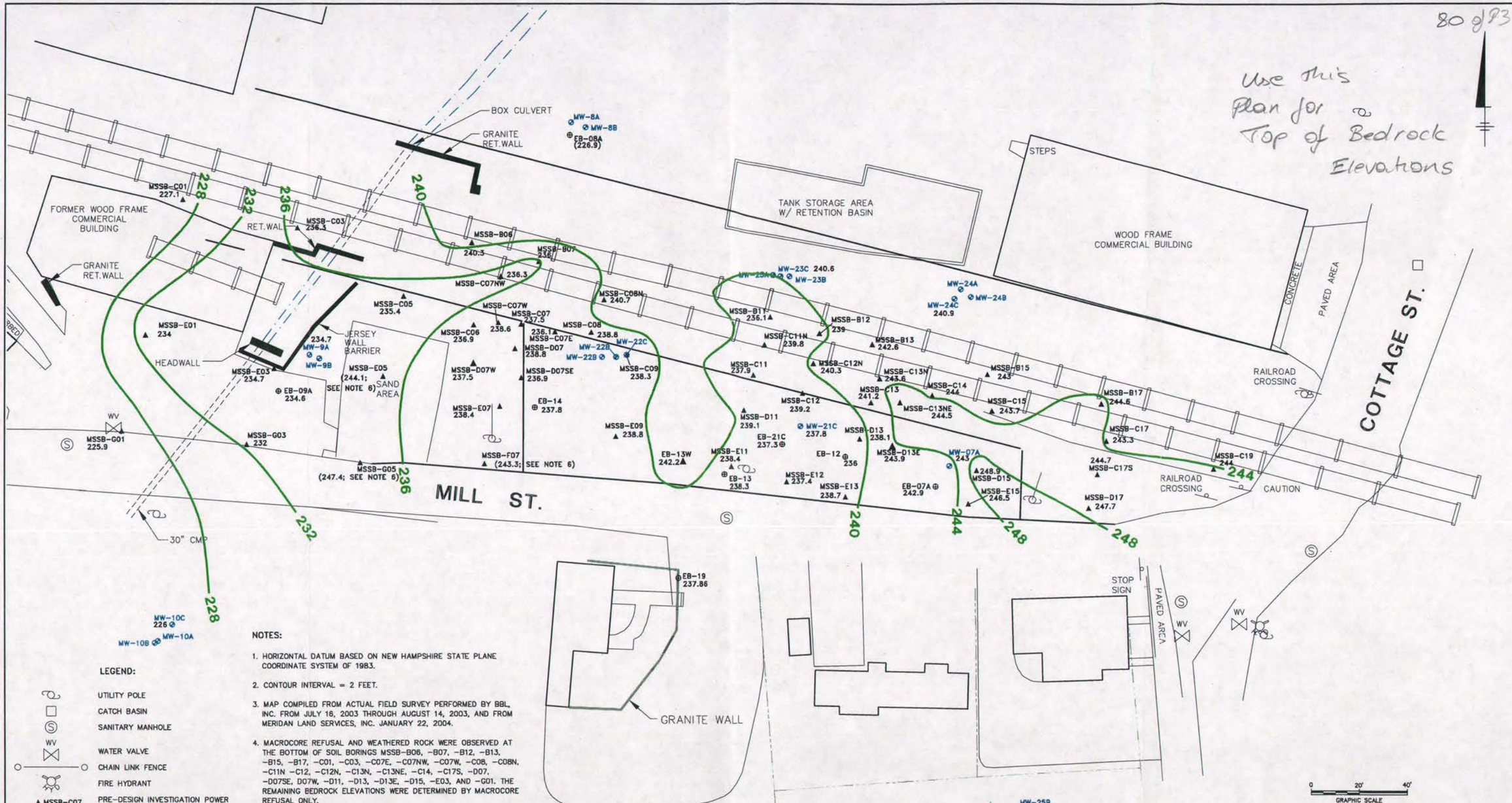

LEGEND:

	UTILITY POLE
	CATCH BASIN
	SANITARY MANHOLE
WV	WATER VALVE
	CHAIN LINK FENCE
	FIRE HYDRANT
▲ MSSB-C07	PRE-DESIGN INVESTIGATION POWER PROBE BORING LOCATION
⊕ EB-13	HISTORIC EPA BORING LOCATION
⊘ MW-8B	MONITORING WELL
238	BEDROCK ELEVATION CONTOUR
238.3	TOP OF BEDROCK ELEVATION
(239.1)	NOT USED TO DEVELOP BEDROCK ELEVATION CONTOURS (SEE NOTES 6 & 7)

NOTES:

1. HORIZONTAL DATUM BASED ON NEW HAMPSHIRE STATE PLANE COORDINATE SYSTEM OF 1983.
2. CONTOUR INTERVAL = 2 FEET.
3. MAP COMPILED FROM ACTUAL FIELD SURVEY PERFORMED BY BBL, INC. FROM JULY 16, 2003 THROUGH AUGUST 14, 2003, AND FROM MERIDAN LAND SERVICES, INC. JANUARY 22, 2004.
4. MACROCORE REFUSAL AND WEATHERED ROCK WERE OBSERVED AT THE BOTTOM OF SOIL BORINGS MSSB-B06, -B07, -B12, -B13, -B15, -B17, -C01, -C03, -C07E, -C07NW, -C07W, -C08, -C08N, -C11N -C12, -C12N, -C13N, -C13NE, -C14, -C17S, -D07, -D07SE, D07W, -D11, -D13, -D13E, -D15, -E03, AND -G01. THE REMAINING BEDROCK ELEVATIONS WERE DETERMINED BY MACROCORE REFUSAL ONLY.
5. BEDROCK ELEVATIONS FROM THE 1993 EPA RI BEDROCK SURFACE MAP (EB-07A, -08A, -09A, -13, -19), MONITORING WELL REPORTS (MW-07A, -09A, -21C) AND CROSS SECTIONS (EB-14) ARE REFERENCED TO NGVD 1929 AND WERE CONVERTED TO NAVD 1988 FOR THIS FIGURE.
6. THE ELEVATION OF BEDROCK AT HISTORIC EPA LOCATION EB-12 AND EB-21C ARE BASED ON SOIL BORINGS INSTALLED BY BBL FOR ADDITIONAL PCB DELINEATION.
7. ELEVATIONS FOR MSSB-E05, -F07, AND -G05 APPEAR TO BE RELATED TO A BOULDER ZONE DEPICTED IN 1993 EPA RI CROSS SECTIONS AND ARE SHOWN FOR INFORMATION ONLY.
8. BEDROCK ELEVATION FOR EB-08A AND MW-25C ARE SHOWN FOR INFORMATION ONLY DUE TO SPATIAL DISTRIBUTION.

X: 10002X05.DWG
L: ON=*, OFF=*REF*
P: PAGESET/PLT-DL
1/14/05 SYR-85-GMS GMS LJP NJR
C/10002090/10002G09.DWG

DRAFT FOR EPA REVIEW

GENERAL ELECTRIC COMPANY
FLETCHER'S PAINT WORKS AND STORAGE FACILITY
SUPERFUND SITE – MILFORD, NEW HAMPSHIRE
PRE-DESIGN REPORT

MILL STREET AREA - BEDROCK ELEVATION CONTOURS

BBL BLASLAND, BOUCK & LEE, INC. engineers, scientists, economists

FIGURE 17

RAILROAD TRACK SURCHARGE

LIBRARY COPY
HALEY & ALDRICH, INC.

Manual for Railway ENGINEERING

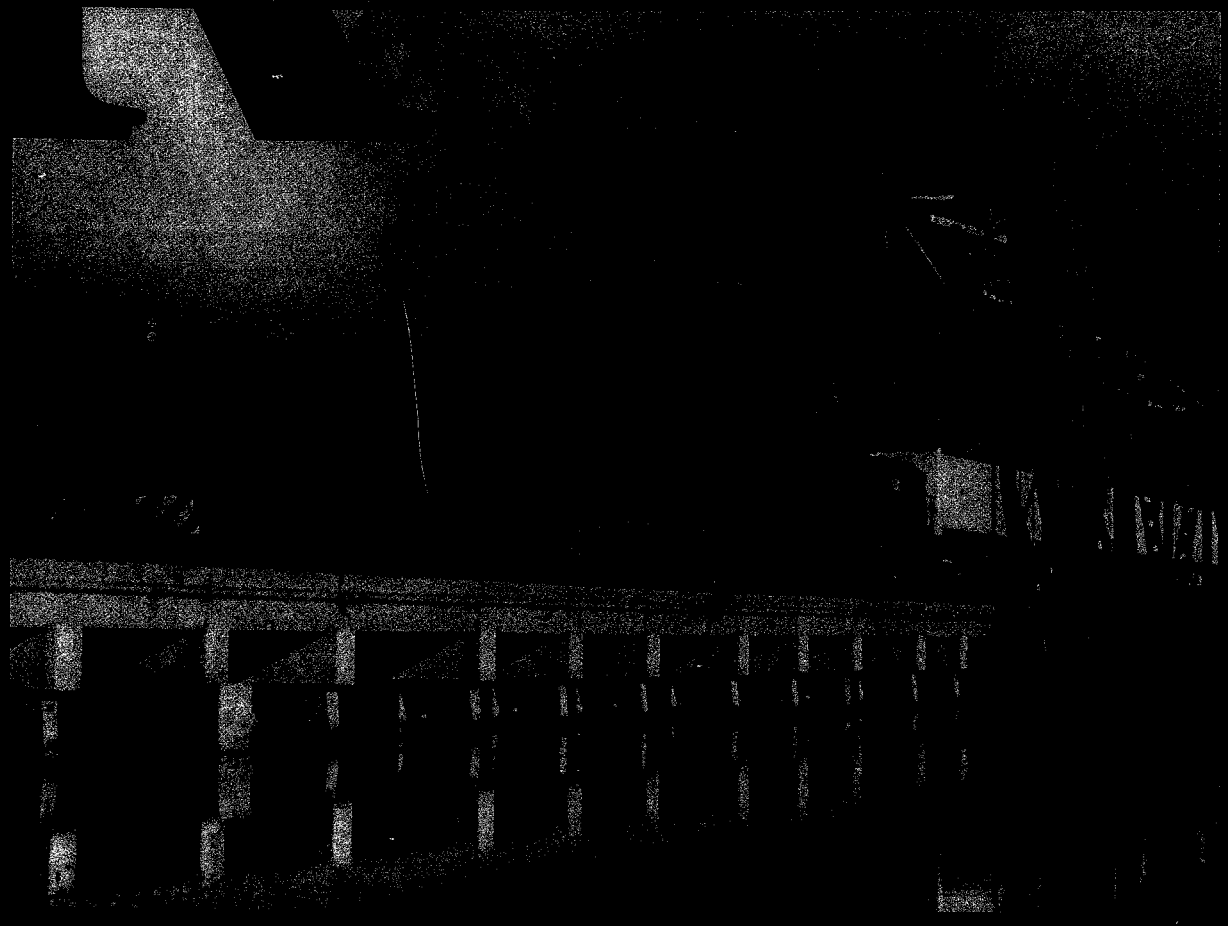

VOLUME

2

tures

ARTEA

AMERICAN RAILWAY
ENGINEERING ASSOCIATION

83 9/83

1.3.3 LIVE LOAD (1995)

a. The recommended live load in lb per axle and uniform trailing load for each track is the Cooper E 80 load shown in Figure 1-2 or the Alternate Live Load on 4 axles spaced as shown in Figure 1-3, whichever produces the greater stresses.

b. The Engineer shall specify the live load to be used, and such load shall be proportional to the recommended load, with the same axle spacing.

c. For bridges on curves, provision shall be made for the increased proportion carried by any truss, girder, or stringer due to the eccentricity of the load.

d. For members receiving load from more than one track, the design live load on the tracks shall be as follows:

- For two tracks, full live load on two tracks.
- For three tracks, full live load on two tracks and one-half on the other track.
- For four tracks, full live load on two tracks, one-half on one track, and one-quarter on the remaining one.
- For more than four tracks, as specified by the Engineer.
- The selection of the tracks for these loads shall be such as will produce the greatest live load stress in the member.

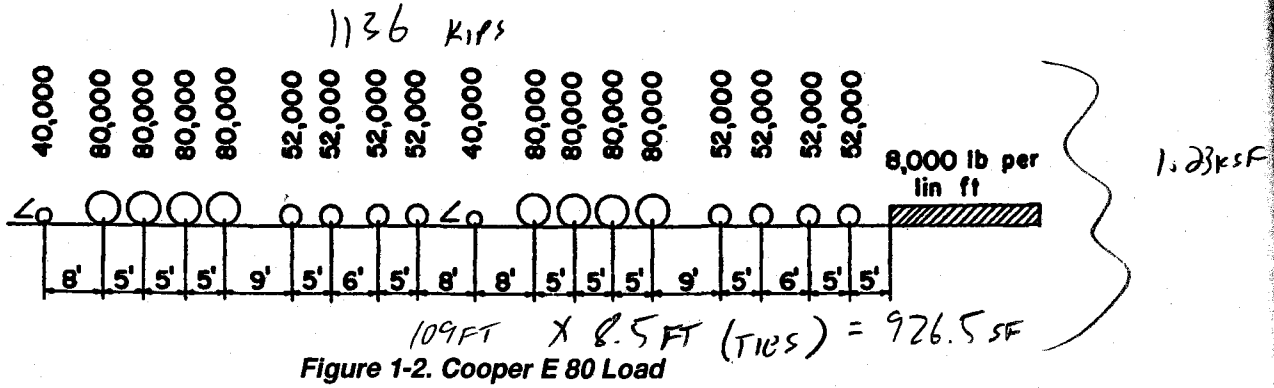

Figure 1-2. Cooper E 80 Load

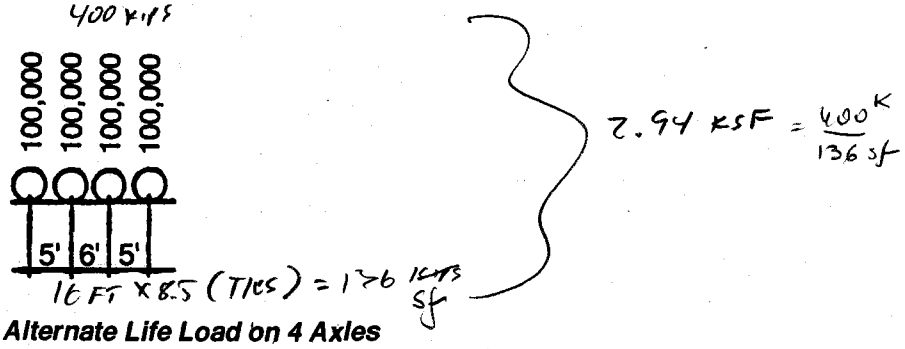

Figure 1-3. Alternate Life Load on 4 Axles

© 1996, American Railway Engineering Association

Elm Street - Calculations

HALEY & ALDRICH	CALCULATIONS	File No.	32608-003
		Sheet	
Client	Arcadis BBL	Date	12/31/07
Project	Fletcher's Paint Works Superfund Site	Computed By	BV
Subject	Support of Excavation 100% Design – Elm Street	Checked By	DRS

100% DESIGN SUBMISSION
EIM STREET
SUPPORT OF EXCAVATION DESIGN
FLETCHER'S PAINT SITE
MILFORD, NH

DECEMBER 31, 2007

DESIGNED BY: BORA VUKAJ
CHECKED BY: DAMIAN SIEBERT P.E.
BRYAN SWEENY P.E.

Support of Excavation Design

Purpose:

Design the steel sheeting and soldier pile and lagging earth support systems for the proposed soil removal cells on Elm Street.

Support of Excavation Layout:

Layout of steel sheeting and soldier pile and lagging were based on drawings by Arcadis BBL dated December 2007.

References:

"Manual of Steel Construction; Allowable Stress Design," Ninth Edition 1995

"Building Code Requirements for Structural Concrete (ACI 318-05) and Commentary (ACI 318R-02)," 2005

"Manual for Railway Engineering," 2007 by AREMA

"New Hampshire State Building Code"

Method of Analysis:

The steel sheeting and soldier pile and lagging support of excavation systems were designed with a combination of hand calculations and the computer program cT-Shoring Plus Suite V 7.3K distributed by CIVILTECH SOFTWARE USA

HALEY & ALDRICH	CALCULATIONS	File No.	32608-003
		Sheet	2 of 58
Client	Arcadis BBL	Date	12/31/07
Project	Fletcher's Paint Works Superfund Site	Computed By	BV
Subject	Support of Excavation 100% Design – Elm Street	Checked By	DRS

Table of Contents:

Subject	Page No.
Appendix A – Design Cases	
-Design Cases Summary and Plan	3-5
-Design Case 1- River Sheeting	6-12
-Design Case 2 - River Sheeting	13-20
-Design Run 1 – Cells D, F	21-24
-Design Run 2 – Cells G, K	25-28
-Design Run 3 – Cells AA1, P1, QQ2	29-32
-Design Run 4 – Cells Z, Y	33-36
-Design Run 5 – Cell V	37-40
-Design Run 6 – Cell Q	41-44
-Design Run 7 – Cells HH1 and E	45-48
Appendix B – Bracing Design	
-Internal Bracing Design Cells Q and V	49-53
Appendix C – Details	54-55
Appendix D – Background Information	
- Soil Profile	56-58

APPENDIX A – DESIGN CASES

Summary of Results

Max Moment in Sheeting wall: 30 k-ft / ft wall
Max Moment in Soldier Pile Cell V and Q: 13 k-ft / ft wall
Design Force in Strut (Cells V and Q): 8.0 kips / ft wall
Maximum Moment in Soldier Pile everywhere else: 90 k-ft / ft wall

Sheeting Size Selection

Section Modulus Required S_{req} = M * 12 / (0.67 * 50 * 1.2)
= 30 * 12 / (0.67 * 50 * 1.2) = 9 in^3

Section Modulus of PZ22 S=18 in^3 18 in^3 > 9 in^3 OK

Use PZ22 for sheeting

Soldier Pile Selection

Soldier Pile Spacing: 5 ft (Except for Cell V and Q) Maximum Moment 90 k-ft / ft wall

Section Modulus Required S_{req} = M * 12 *Spacing / (0.67 * 50 * 1.2)
= 90 * 12 * 6 / (0.67 * 50 * 1.2) = 135 in^3

Section Modulus of HP14x102 S_{X-X}=150 in^3 150 in^3 > 135 in^3 OK

Soldier Pile Spacing: 6 ft (Cells V and Q) Maximum Moment 13 k-ft / ft wall

Section Modulus Required S_{req} = M * 12 *Spacing / (0.67 * 50 * 1.2)
= 13 * 12 * 6 / (0.67 * 50 * 1.2) = 24 in^3

Section Modulus of HP14x102 S_{X-X}=150 in^3 150 in^3 > 24 in^3 OK

Use HP 14x102 for solder pile size for the soldier pile and lagging wall

Plan View of Analysis Runs

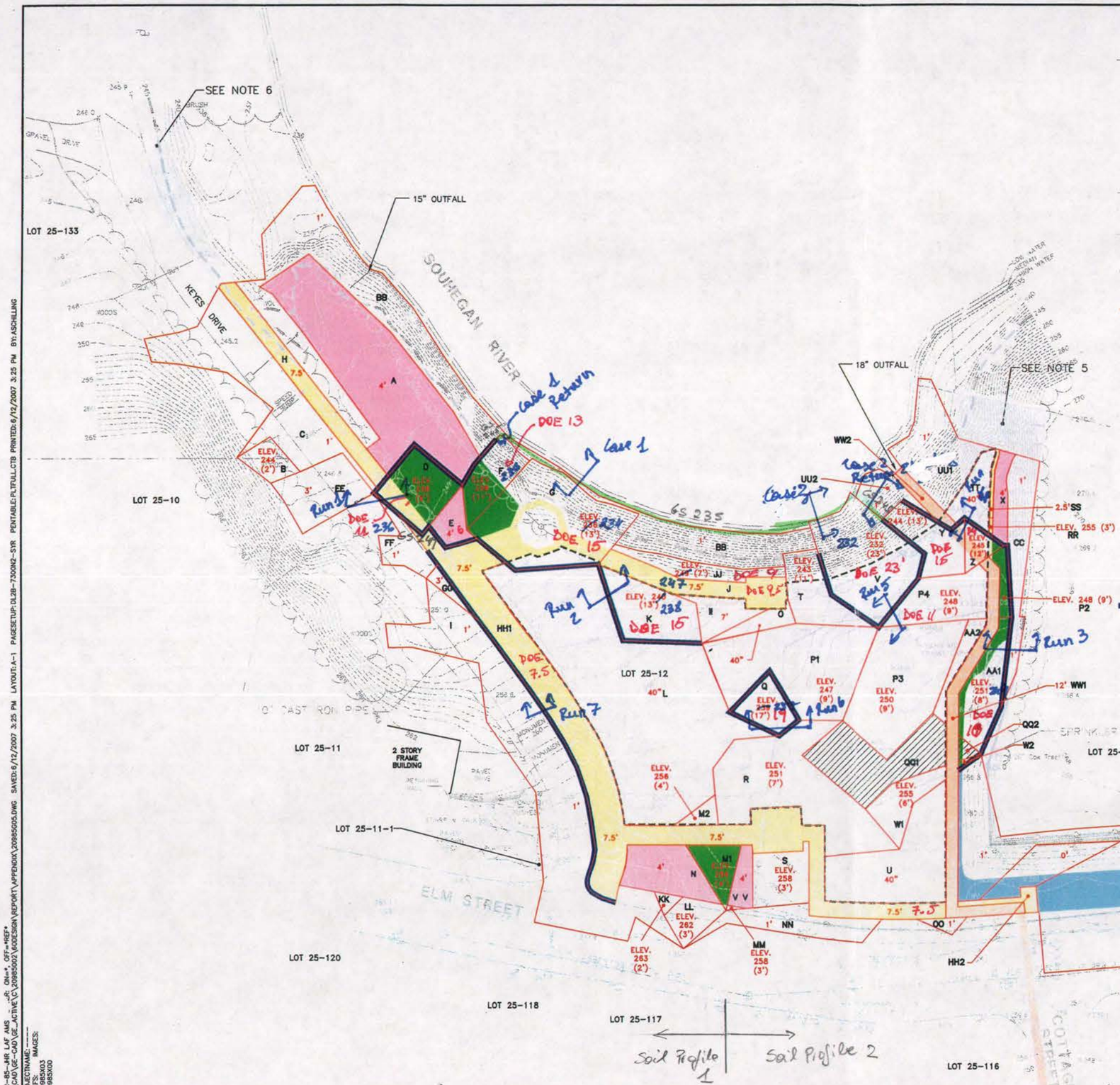

LEGEND:

- PROPERTY LINE
- UTILITY POLE
- CATCH BASIN
- SANITARY MANHOLE
- STORM MANHOLE
- WATER VALVE
- WATER METER
- TELEPHONE JACK
- INDEX SURFACE ELEVATION CONTOUR
- INTERMEDIATE SURFACE ELEVATION CONTOUR
- CHAIN LINK FENCE
- FIRE HYDRANT
- APPROXIMATE ELEVATION OF 100-YEAR FLOOD PLAIN
- PRIOR 1-FOOT REMOVAL
- EXCAVATION LIMITS
- ELEV. 252 (4') — BOTTOM OF EXCAVATION ELEVATION (DEPTH SHOWN IN PARENTHESES REPRESENTS GENERAL EXCAVATION DEPTH AND IS PROVIDED FOR INFORMATIONAL PURPOSES ONLY).
- 4' — DEPTH OF EXCAVATION
- A — EXCAVATION CELL ID
- APPROXIMATE AREA OF PROPOSED COVER SYSTEM
- PROPOSED UTILITY CORRIDORS
- PROPOSED REPLACEMENT STORM SEWER
- POTENTIAL TREE PLANTING CORRIDOR ALREADY SUBJECT TO AT LEAST 4 FEET OF EXCAVATION TO ACHIEVE SUBSURFACE SCL
- POTENTIAL TREE PLANTING CORRIDOR WHERE LESS THAN 4 FEET OF EXCAVATION REQUIRED TO MEET SCLs, SO ADDITIONAL EXCAVATION PROPOSED TO A DEPTH OF 4 FEET
- POTENTIAL TREE CORRIDOR WHERE, BASED ON EXISTING DATA, ADDITIONAL EXCAVATION IS NOT REQUIRED TO ACHIEVE 25 ppm
- SOLDIER PILE AND LAGGING SUPPORT
- EXCAVATION TO BE SLOPED IN THIS AREA BETWEEN 6 OR 7 FOOT EXCAVATIONS TO SOUTH AND 9 FOOT EXCAVATION TO NORTH

DOE - Depth of Excavation

NOTES:

1. ELEVATIONS BASED ON NORTH AMERICAN VERTICAL DATUM OF 1988.
2. HORIZONTAL DATUM BASED ON NEW HAMPSHIRE STATE PLANE COORDINATE SYSTEM OF 1983.
3. CONTOUR INTERVAL = 1 FEET.
4. MAP COMPILED FROM ACTUAL FIELD SURVEY PERFORMED BY BBL, INC. FROM JULY 16, 2003 THROUGH AUGUST 14, 2003, BY MERIDAN LAND SERVICES, INC. JANUARY 22, 2004, AND BY ARCADIS ON MAY 24, 2007.
5. TITLE TO SHADED AREA IS UNCERTAIN AT THIS TIME. NO BOUNDARY LINE AGREEMENT (REFERRED TO IN THE CHAIN OF TITLE) HAS BEEN FOUND.
6. SHADED AREA AT THE NORTHWEST CORNER OF THE LOT DEPICTS AREA WHICH IS PART OF THE ROAD TO THE KEYES FIELD PARCEL. NO CONVEYANCE TO THE TOWN FOR THIS AREA HAS BEEN FOUND.
7. CELLS THAT WERE SPLIT BY UTILITY CORRIDORS WERE GIVEN A SUFFIX OF 1 AND 2 (I.E., AA1 AND AA2). THE DEPTH OF EXCAVATION IS THE SAME FOR BOTH CELLS, BUT MAY HAVE BEEN LEFT OFF FOR SIMPLICITY.
8. ELM STREET SITE PROPERTY LINE SHOWN WAS ESTABLISHED FROM DEEDS OF RECORD, SURVEY, AND EXISTING MONUMENTATION. OTHER PROPERTY LINES SHOWN WERE OBTAINED FROM TOWN OF MILFORD TAX MAP 25.

0 30' 60'
GRAPHIC SCALE

DRAFT
FOR EPA REVIEW

GENERAL ELECTRIC COMPANY
FLETCHER'S PAINT WORKS AND STORAGE FACILITY
SUPERFUND SITE - MILFORD, NEW HAMPSHIRE
INTERMEDIATE (60%) DESIGN REPORT

ELM STREET AREA - EXCAVATION LIMITS AND STRUCTURAL SUPPORTS

ARCADIS BBL
Infrastructure, environment, facilities

FIGURE
A-1

STR-85-BR LAF AMS ...R: ON=*, OFF=*REF*
G:\CAD\GE-CAD\GE_ACTIVE\C\20985002\SUBSIGN\REPORT\APPENDIX\20985005.DWG SAVED: 6/12/2007 3:25 PM LAYOUT: A-1 PAGESETUP: DL2B-7500N2-SYR PENTABLE: PLTFULL.CTB PRINTED: 6/12/2007 3:25 PM BY: ASCHILLING
PROJECTNAME: ----
PROJECTS: 20985003
IMAGES: 20985000

DESIGN CASE 1 - RIVER SHEETING

River Sheeting Case 1:

- Case 1 represents sheeting along cells BB, G, and F.
- Ground surface along river is at elev. 235'
- Maximum BOE is to elev. 234 (cell G)
- Design ground water is at elev. 243
- Soil Profile 1

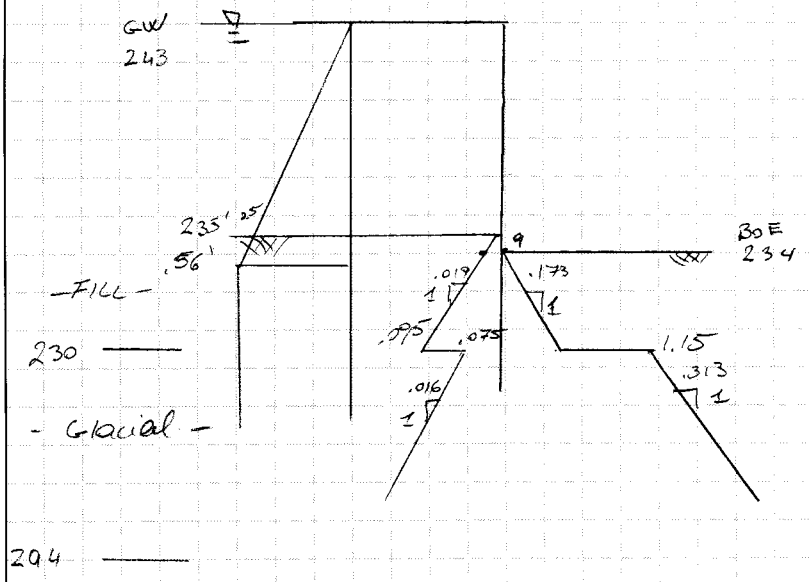

Fill
$\gamma = 120$ pcf $\phi = 30°$
$K_a = 0.33$ $K_p = 3$

Glacial
$\gamma = 125$ pcf $\phi = 36°$
$K_a = 0.26$ $K_p = 5$

Pressure calculations:

Water: $(243-234) \times 62.4 = 0.56$ ksf

Fill: $5' \times (120-62.4) \times 0.33 = 0.095$ ksf slope $(120-62.4) \cdot 0.33 = 0.019$ ksf

Glacial: $5 \times (120-62.4) \times 0.26 = 0.075$ ksf slope $(125-62.4) \times 0.26 = .016$ ksf

Passive, Fill slope $(120-62.4) \times 3 = 0.173$ ksf

Glacial: $4 \times (120-62.4) \cdot 5 = 1.15$ ksf slope $(125-62.4) \cdot 5 = 0.313$

8 p58

GE Fletcher - Elm St River Sheeting Case1

32608-003

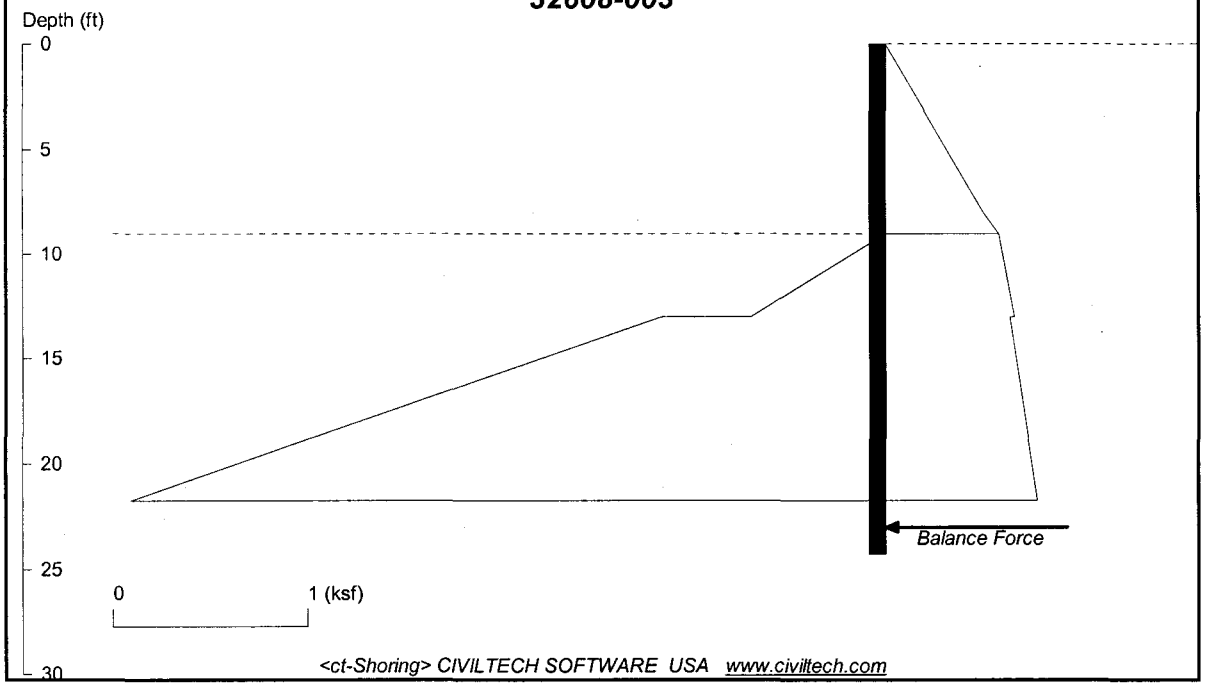

Licensed to

Date: 12/11/2007 File Name: G:\32608\100%Design\ct-Shoring\ElmStreet\2007-1203-Case1_P1.sho

WALL HEIGHT: 9.00 MIN. EMBEDMENT: 15.26 MIN. PILE LENGTH: 24.26
MAX. MOMENT: 28.18 AT DEPTH: 16.50

MIN. PILE SIZE AND TOP DEFLECTION - shown in ( ):
SZ15 (1.9) PDA27 (1.8) 1BXN (2.0) Z65 (1.3) 1N (1.6) CZ84 (1.3) H95 (1.3)
BZ7 (1.3) Z70 (1.2) CZ95 (1.1) Z75 (1.1) BZ8.6 (1.2) SZ18 (0.9) SPZ19.5 (1.0)
Required Min. Section Modulus = 10.2 in3/pile, Fy=50 ksi=345 MPa, Fb/Fy=0.66

DRIVING PRESSURE (ACTIVE, WATER, & SURCHARGE) X -- Depth from wall top

No.	X top	Top Pres.	X bot.	Bot. Pres.	Spacing
1	0.00	0.00	8.00	0.50	1.00
2	8.00	0.50	9.00	0.58	1.00

ACTIVE PRESSURE (BELOW DREDGE LINE) Y - Depth from dredge level

No.	Y top	Top Pres.	Pres. Slope	Width
1	0.00	0.58	0.02	1.00
2	4.00	0.63	0.02	1.00

PASSIVE PRESSURE (BELOW DREDGE LINE) Y -- Depth from dredge level
In the calculation, the following passive pressure are divided by a Factor of Safety =1

No.	Y top	Top Pres.	Pres. Slope	Width
1	0.00	0.00	0.17	1.00
2	4.00	1.15	0.31	1.00

UNITS: Length/Depth - ft, Force - kip, Moment - kip-ft, Pressure - ksf, Pres. Slope - kip/ft3, Deflection - in

GE Fletcher - Elm St River Sheeting Case1

32608-003

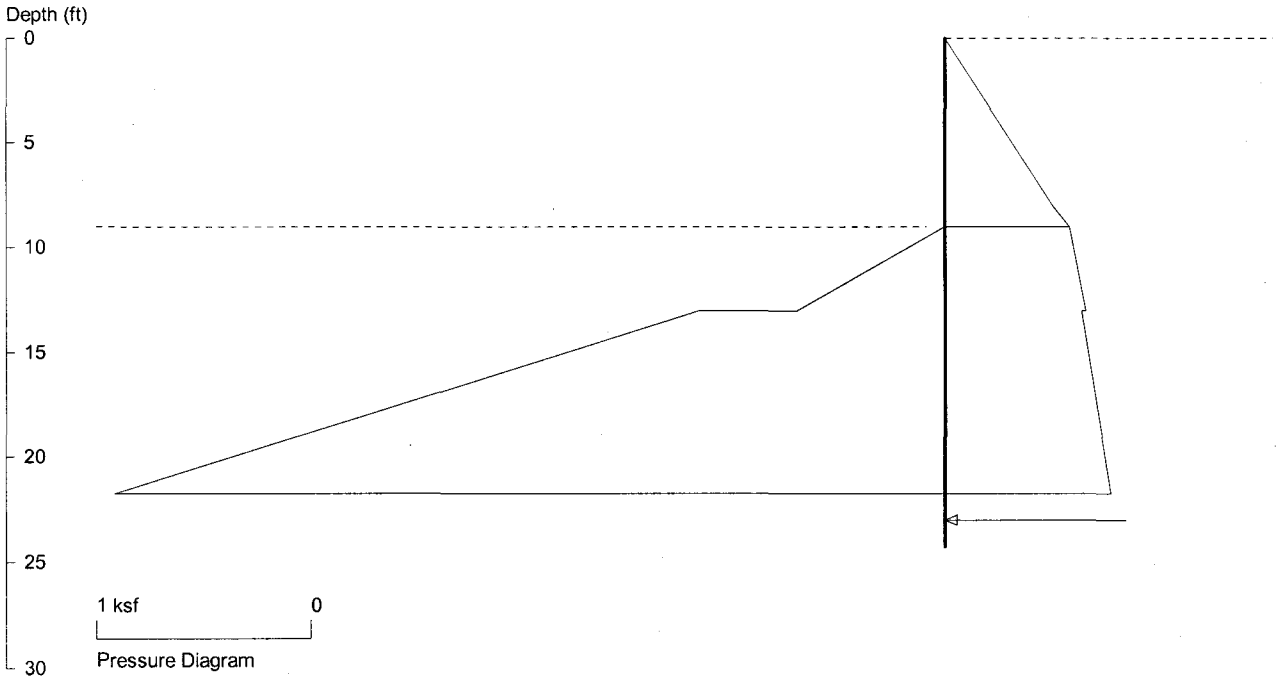

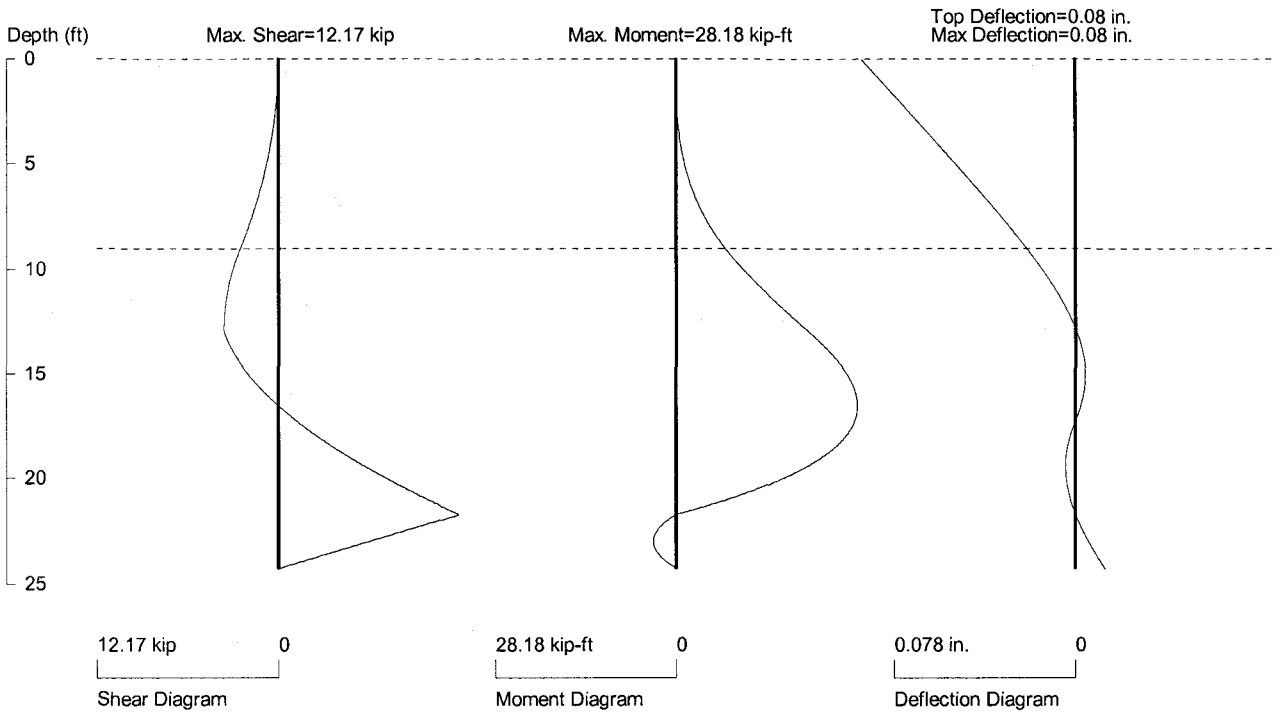

PRESSURE, SHEAR, MOMENT, AND DEFLECTION DIAGRAMS

Based on one soldier pile or one foot spacing of sheet pile

Pile Properties: E (ksi) = 29000, I (in4) = 904

Date: 12/11/2007 File Name: G:\32608\100%Design\ct-Shoring\ElmStreet\2007-1203-Case1_P1.sho

Licensed to

River sheeting Case 1 Return

- At the return on cell F, the ground surface is at elev. 240'.
- Water elevation is 243 and bottom of excavation is elev. 236. Soil Profile 1

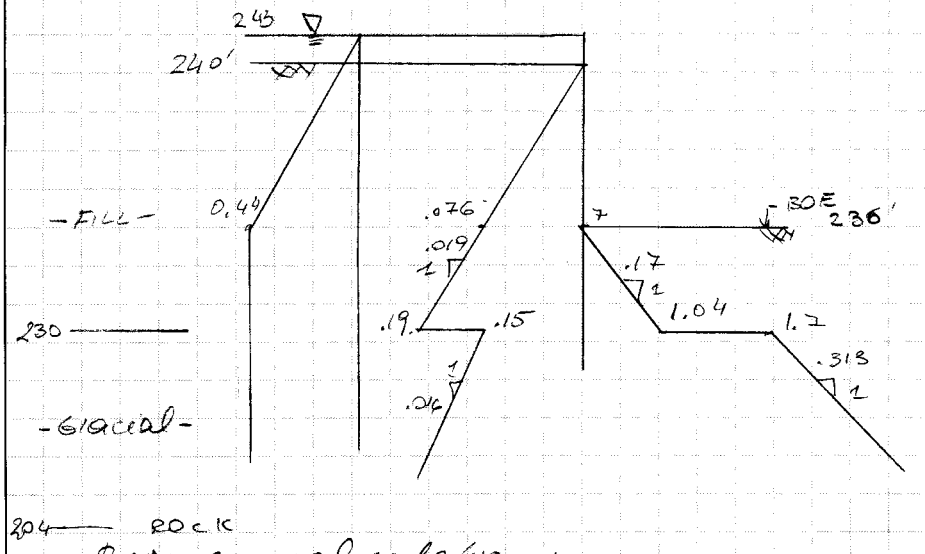

Fill
$\gamma = 120$ pcf $\phi = 30$
$k_a = 0.33$ $k_p = 3$

Glacial
$\gamma = 125$ pcf $\phi = 36$
$k_a = 0.26$ $k_p = 5$

Pressure calculations:

water: $(243-236) \times 62.4 = 0.44$ ksf

Fill: $(240-230) \times (120-62.4) \times 0.33 = 0.19$ ksf

Glacial: $10' \times (120-62.4) \times 0.26 = 0.15$ ksf slope 0.016

Passive Fill: $(236-230) \times (120-62.4) \times 3 = 1.04$ ksf

Glacial $6 \times (120-62.4) \times 5 = 1.7$ ksf

GE Fletcher - Elm St River Sheeting Case1 Return

32608-003

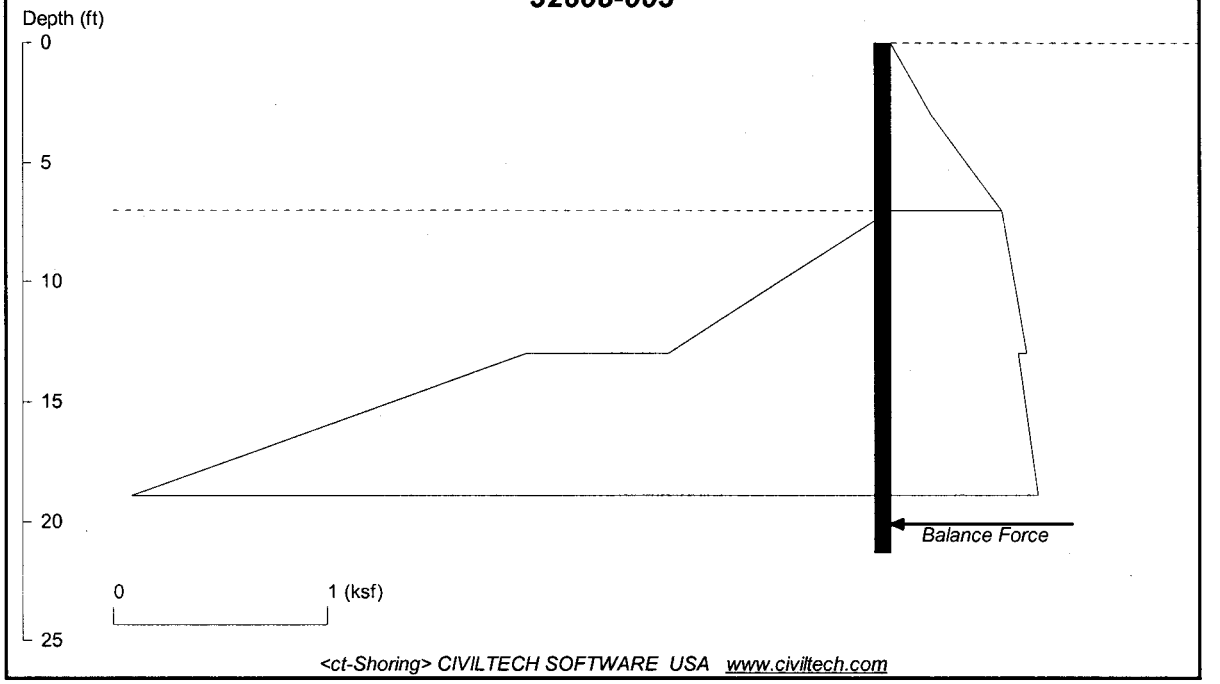

Licensed to

Date: 12/11/2007 File Name: G:\32608\100%Design\ct-Shoring\ElmStreet\2007-1203-Case1_P2.sho

WALL HEIGHT: 7.00 MIN. EMBEDMENT: 14.29 MIN. PILE LENGTH: 21.29
MAX. MOMENT: 19.28 AT DEPTH: 14.51

MIN. PILE SIZE AND TOP DEFLECTION - shown in ( ):
SZ12 (0.9) SZ14 (0.9) SZ15 (0.9) PDA27 (0.8) 1BXN (0.9) Z65 (0.6) 1N (0.7)
CZ84 (0.6) H95 (0.6) BZ7 (0.6) Z70 (0.5) CZ95 (0.5) Z75 (0.5) BZ8.6 (0.5)
Required Min. Section Modulus = 7.0 in3/pile, Fy=50 ksi=345 MPa, Fb/Fy=0.66

DRIVING PRESSURE (ACTIVE, WATER, & SURCHARGE) X -- Depth from wall top

No.	X top	Top Pres.	X bot.	Bot. Pres.	Spacing
1	0.00	0.00	3.00	0.19	1.00
2	3.00	0.19	7.00	0.52	1.00

ACTIVE PRESSURE (BELOW DREDGE LINE) Y - Depth from dredge level

No.	Y top	Top Pres.	Pres. Slope	Width
1	0.00	0.52	0.02	1.00
2	6.00	0.59	0.02	1.00

PASSIVE PRESSURE (BELOW DREDGE LINE) Y -- Depth from dredge level
In the calculation, the following passive pressure are divided by a Factor of Safety =1

No.	Y top	Top Pres.	Pres. Slope	Width
1	0.00	0.00	0.17	1.00
2	6.00	1.70	0.31	1.00

UNITS: Length/Depth - ft, Force - kip, Moment - kip-ft, Pressure - ksf, Pres. Slope - kip/ft3, Deflection - in

GE Fletcher - Elm St River Sheeting Case1 Return

32608-003

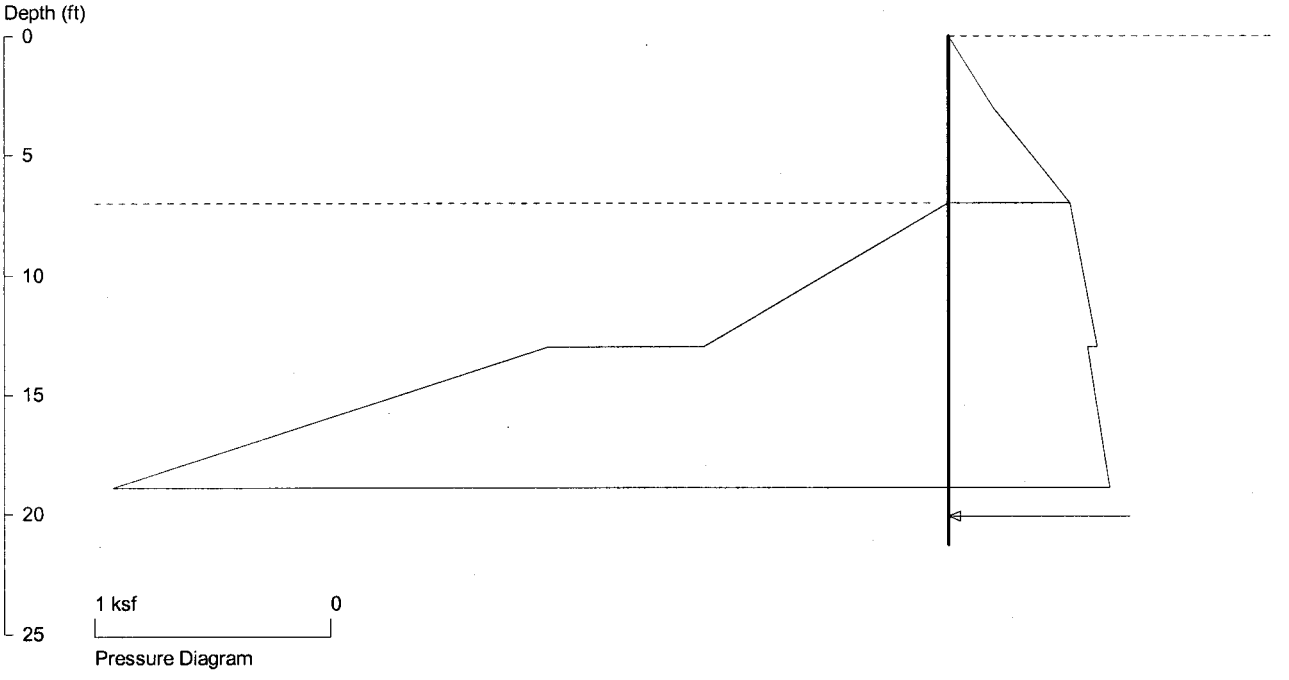

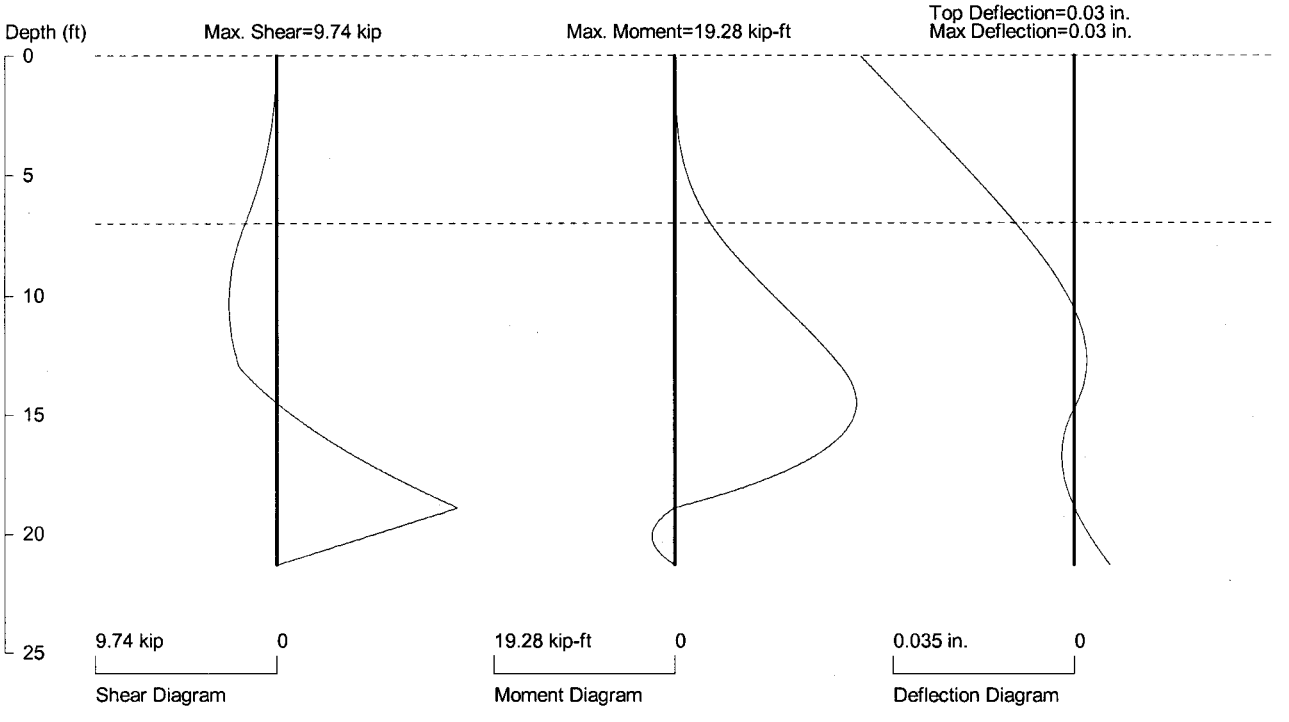

PRESSURE, SHEAR, MOMENT, AND DEFLECTION DIAGRAMS

Based on one soldier pile or one foot spacing of sheet pile

Pile Properties: E (ksi) = 29000, I (in4) = 904

Date: 12/11/2007 File Name: G:\32608\100%Design\ct-Shoring\ElmStreet\2007-1203-Case1_P2.sho

Licensed to

DESIGN CASE 2 - RIVER SHEETING

HALEY & ALDRICH

Calculations

Client		File No.	32608-008
Project		Sheet	14 of 58
Subject		Date	12/15/07
		Computed By	BJ
		Checked By	DRS

River Sheeting case 2:

- case 2 applies to excavation of cell V, BOE 232'
- soil profile 2, top of rock elev. 225.
- water elevation 243 and ground surf. elev. 235.

River sheeting case 2 at return

- As the return, ground surfaces rises up to elev. 245'.
- Bottom of excavation to elev. 232
- ground water is at elev. 243' and use soil profile 2.

Case 2

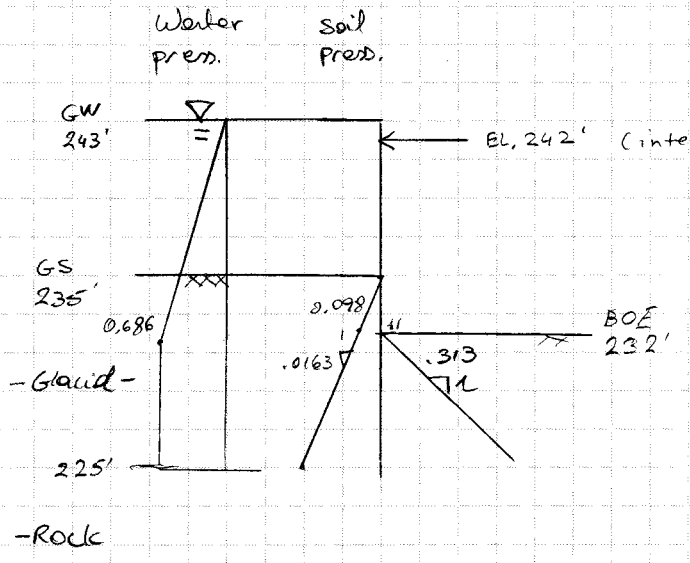

Profile 2

Fill $\gamma = 120$ pcf $k_a = 0.33$ $k_p = 3.0$ Glacial $\gamma = 125$ pcf $k_a = 0.26$ $k_p = 5.0$

Pressure calculations on the sheeting.

Profile 2:

Water $P_w = (243-232) \times 62.4 = 686.4 = 0.686$ ksf

Glacial Active $P_G = \gamma' \cdot k_a$ $k_a = 0.26$ $\gamma' = 125 - 62.4 = 62.6$ pcf

slope of press $= 0.26 \times 62.6 = 16.28 = 0.0163$ ksf

Glacial passive $P_G = \gamma' k_p$ $k_p = 5$ $\gamma' = 62.6$ Δ slope $= 5 \times 62.6 = 313$ pcf $= 0.313$ ksf

$P = 2 \times (120 - 62.4) \times 5 = 0.576$ psf

GE Fletcher - Elm St River Sheeting Case2

32608-003

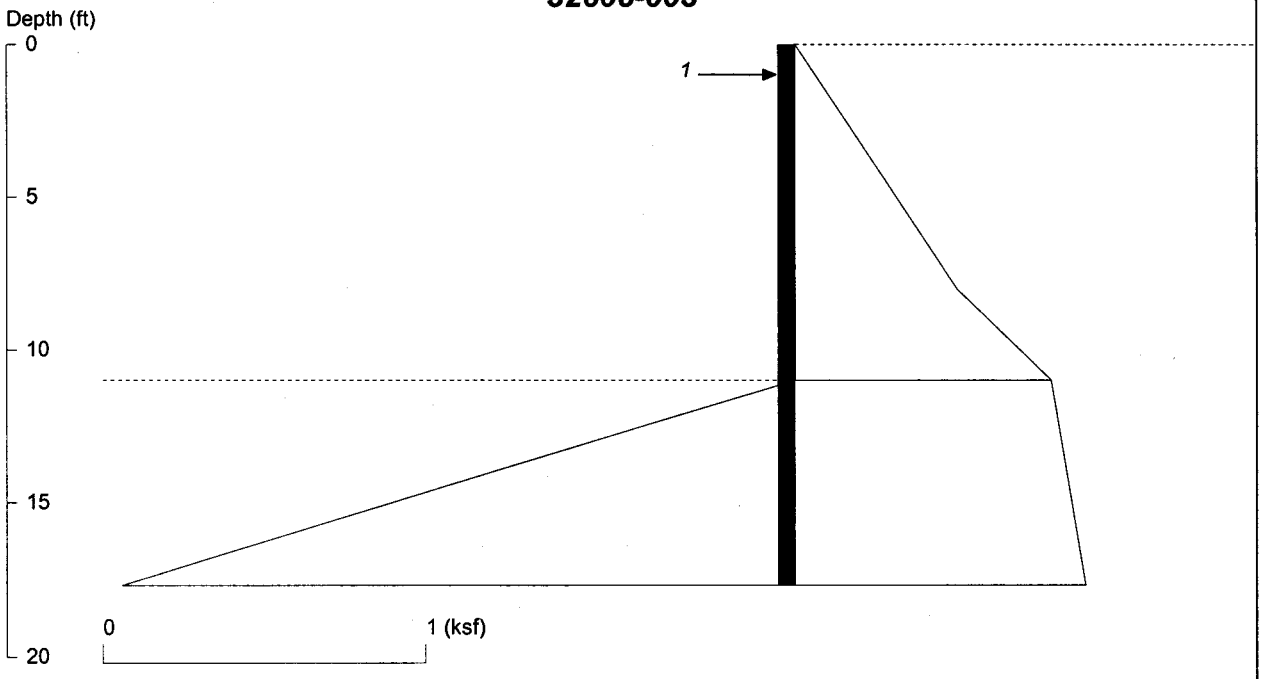

<ct-Shoring> CIVILTECH SOFTWARE USA www.civiltech.com

Licensed to

Date: 12/18/2007 File Name: G:\32608\100%Design\ct-Shoring\ElmStreet\2007-1203-Case2_P1.sho

WALL HEIGHT: 11.00 MIN. EMBEDMENT: 6.68 (8~10 recommended) MIN. PILE LENGTH: 17.68
MAX. MOMENT: 13.11 AT DEPTH: 9.03

MIN. PILE SIZE AND TOP DEFLECTION - shown in ( ):
SZ12 (-0.1) SZ14 (-0.1) SZ15 (-0.1) PDA27 (-0.1) 1BXN (-0.1) Z65 (-0.1) 1N (-0.1)
CZ84 (-0.1) H95 (-0.1) BZ7 (-0.1) Z70 (-0.1) CZ95 (-0.1) Z75 (0.0) BZ8.6 (-0.1)
Required Min. Section Modulus = 6.6 in3/pile, Fy=36 ksi=248 MPa, Fb/Fy=0.66

BRACE, TIEBACK, OR DEADMEN ANCHOR (Spacing = 1):

No.	DEPTH	ANGLE	TOTAL	HORIZ.	VERT.	L_free	L_fixed
1	1.0	0.0	2.6	2.6	0.0	N/A	N/A

TOTAL VERTICAL FORCE: 0.0

DRIVING PRESSURE (ACTIVE, WATER, & SURCHARGE) X -- Depth from wall top

No.	X top	Top Pres.	X bot.	Bot. Pres.	Spacing
1	0.00	0.00	8.00	0.50	1.00
2	8.00	0.50	11.00	0.79	1.00

ACTIVE PRESSURE (BELOW DREDGE LINE) Y - Depth from dredge level

No.	Y top	Top Pres.	Pres. Slope	Width
1	0.00	0.79	0.02	1.00

PASSIVE PRESSURE (BELOW DREDGE LINE) Y -- Depth from dredge level
In the calculation, the following passive pressure are divided by a Factor of Safety =1

No.	Y top	Top Pres.	Pres. Slope	Width
1	0.00	0.00	0.31	1.00

UNITS: Length/Depth - ft, Force - kip, Moment - kip-ft, Pressure - ksf, Pres. Slope - kip/ft3, Deflection - in

GE Fletcher - Elm St River Sheeting Case2

32608-003

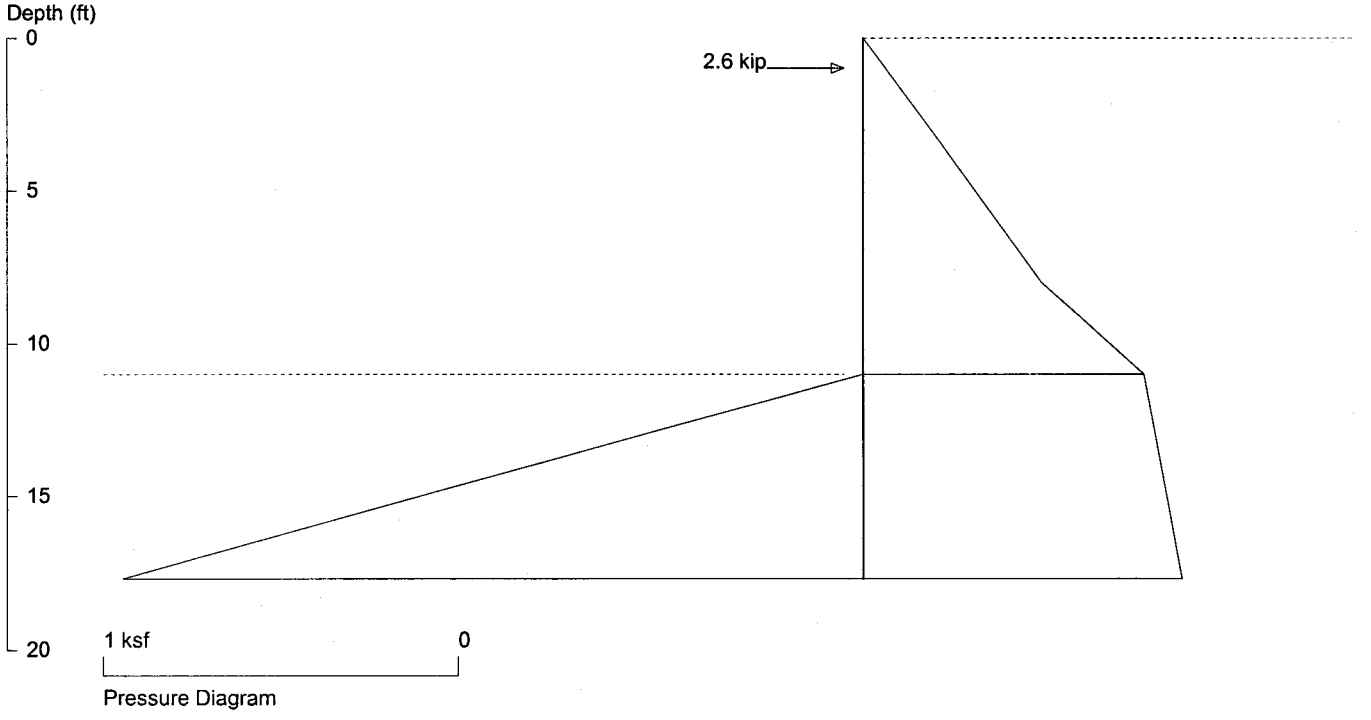

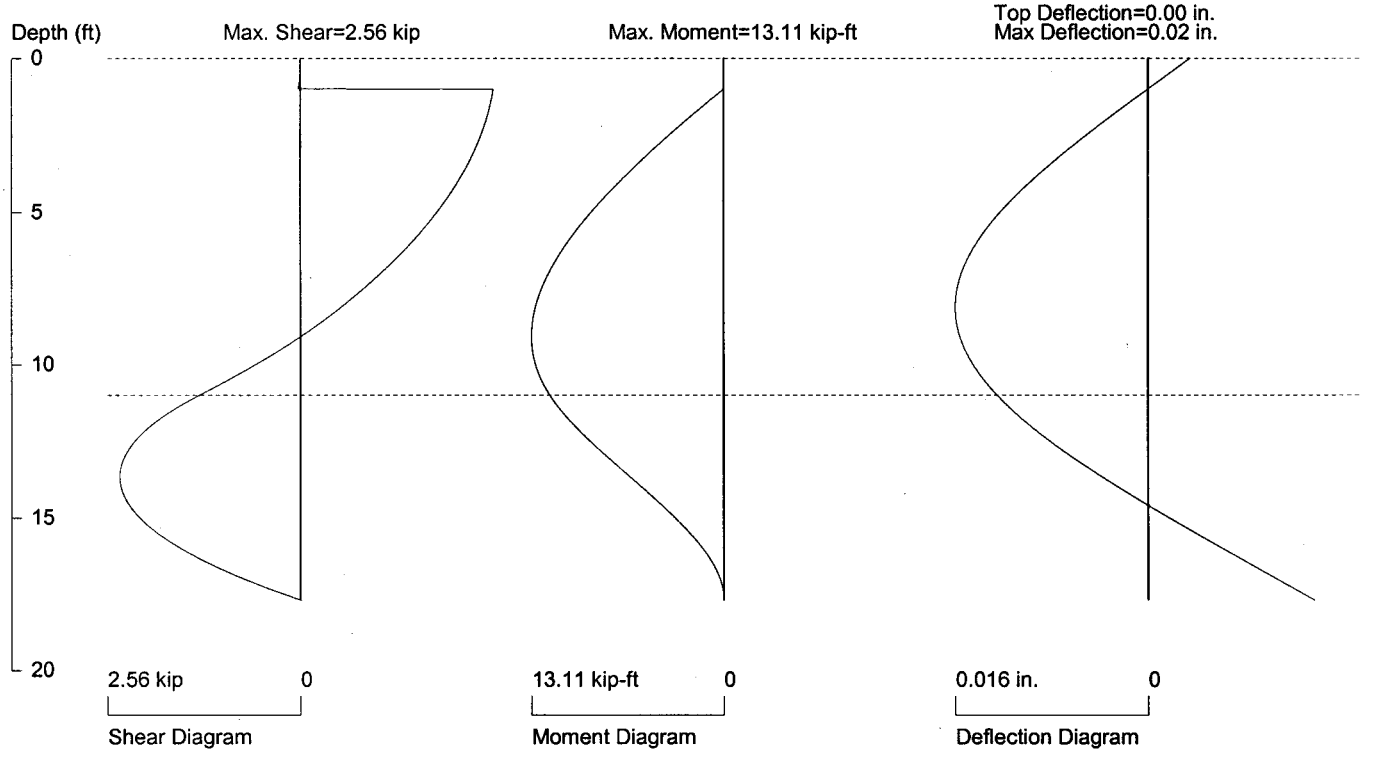

PRESSURE, SHEAR, MOMENT, AND DEFLECTION DIAGRAMS

Based on one soldier pile or one foot spacing of sheet pile

Pile Properties: E (ksi) = 29000, I (in4) = 904

Date: 12/18/2007 File Name: G:\32608\100%Design\ct-Shoring\ElmStreet\2007-1203-Case2_P1.sho

Licensed to

Case 2 at return

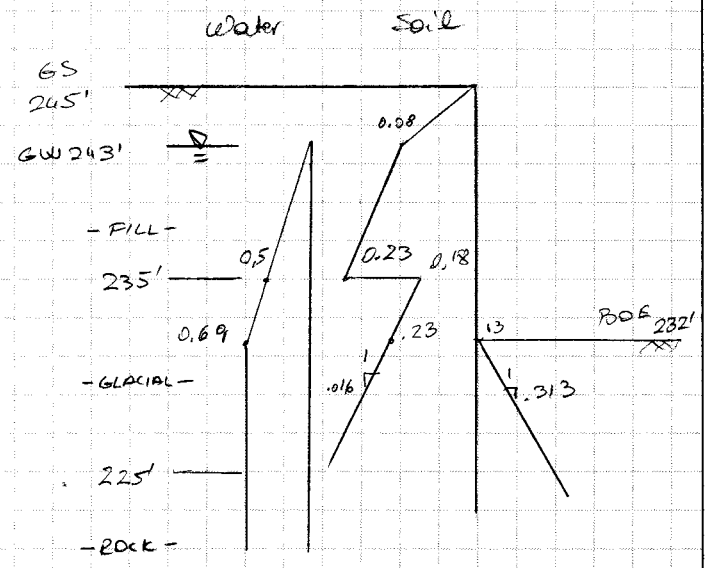

Profile 2

Active Pressures:

Water $(243-232)\times 62.4 = 0.69$ ksf

Fill: $(245-243)\times 120 \times 0.33 = 0.08$ ksf

slope $(120-62.4)\times 0.33 = 0.019$ ksf

Passive: same as previous

Profile 2: water - same

Soil @ 235' fill $0.08 + (243-235)\times(120-62.4)\times 0.33 = 0.23$ ksf

till $[2\times(120) + (243-235)\times(120-62.4)]\times 0.26 = 0.18$

$0.18 + (235-232)\times(125-62.4)\times 0.26 = 0.23$

GE Fletcher - Elm St River Sheeting Case2 Return

32608-003

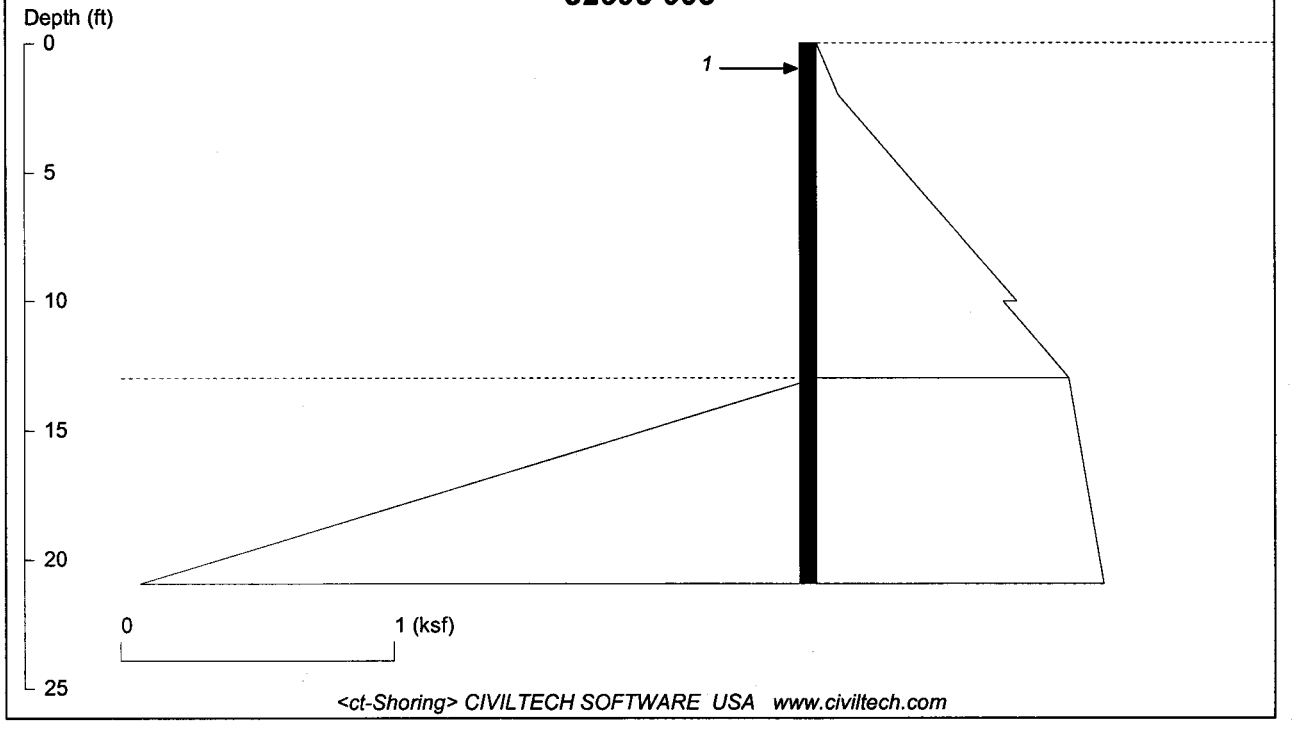

Licensed to

Date: 12/18/2007 File Name: G:\32608\100%Design\ct-Shoring\ElmStreet\2007-1203-Case2_P2.sho

WALL HEIGHT: 13.00 MIN. EMBEDMENT: 7.93 (8~10 recommended) MIN. PILE LENGTH: 20.93
MAX. MOMENT: 22.94 AT DEPTH: 10.49

MIN. PILE SIZE AND TOP DEFLECTION - shown in ( ):
1BXN (-0.2) Z65 (-0.1) 1N (-0.2) CZ84 (-0.1) H95 (-0.1) BZ7 (-0.1) Z70 (-0.1)
CZ95 (-0.1) Z75 (-0.1) BZ8.6 (-0.1) SZ18 (-0.1) SPZ19.5 (-0.1) Z80 (-0.1) CZ107 (-0.1)
Required Min. Section Modulus = 11.6 in3/pile, Fy=36 ksi=248 MPa, Fb/Fy=0.66

BRACE, TIEBACK, OR DEADMEN ANCHOR (Spacing = 1):

No.	DEPTH	ANGLE	TOTAL	HORIZ.	VERT.	L_free	L_fixed
1	1.0	0.0	3.7	3.7	0.0	N/A	N/A

TOTAL VERTICAL FORCE: 0.0

DRIVING PRESSURE (ACTIVE, WATER, & SURCHARGE) X -- Depth from wall top

No.	X top	Top Pres.	X bot.	Bot. Pres.	Spacing
1	0.00	0.00	2.00	0.08	1.00
2	2.00	0.08	10.00	0.73	1.00
3	10.00	0.68	13.00	0.92	1.00

ACTIVE PRESSURE (BELOW DREDGE LINE) Y - Depth from dredge level

No.	Y top	Top Pres.	Pres. Slope	Width
1	0.00	0.92	0.02	1.00

PASSIVE PRESSURE (BELOW DREDGE LINE) Y -- Depth from dredge level
In the calculation, the following passive pressure are divided by a Factor of Safety =1

No.	Y top	Top Pres.	Pres. Slope	Width
1	0.00	0.00	0.31	1.00

UNITS: Length/Depth - ft, Force - kip, Moment - kip-ft, Pressure - ksf, Pres. Slope - kip/ft3, Deflection - in

20 of 58

GE Fletcher - Elm St River Sheeting Case2 Return

32608-003

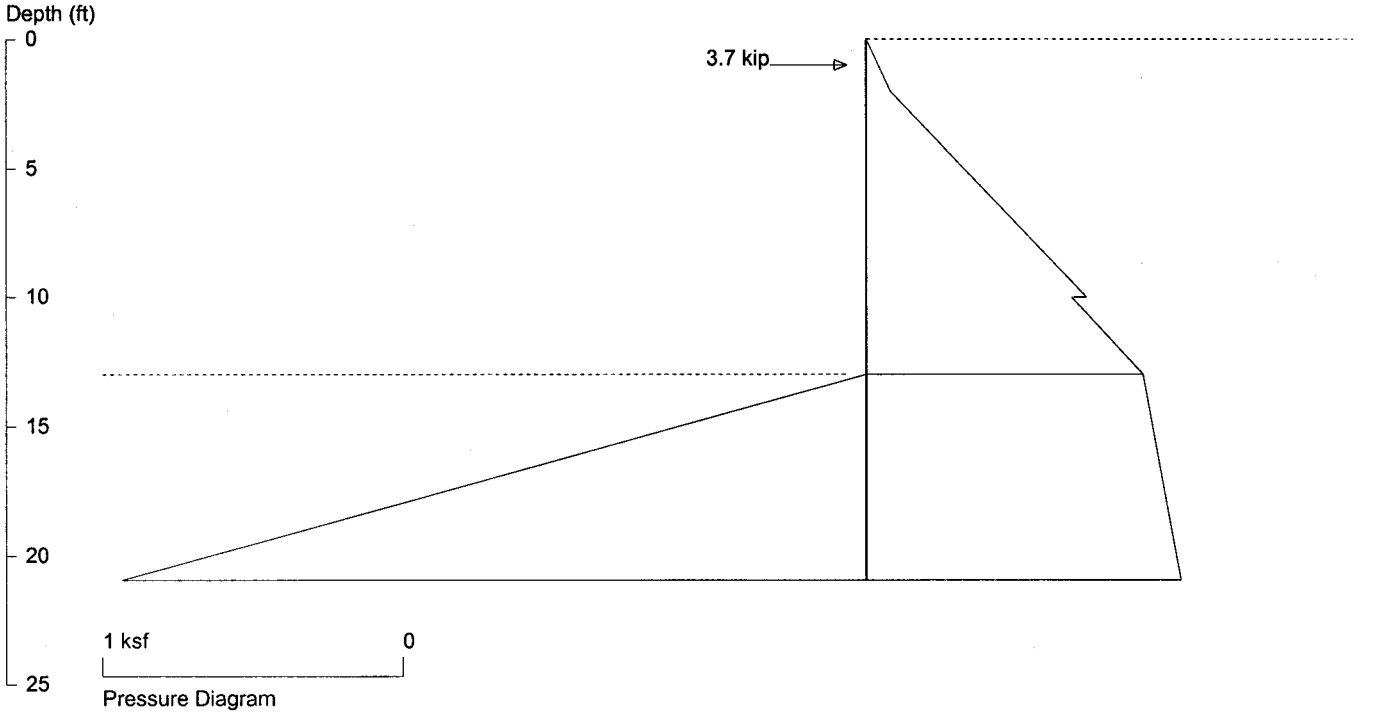

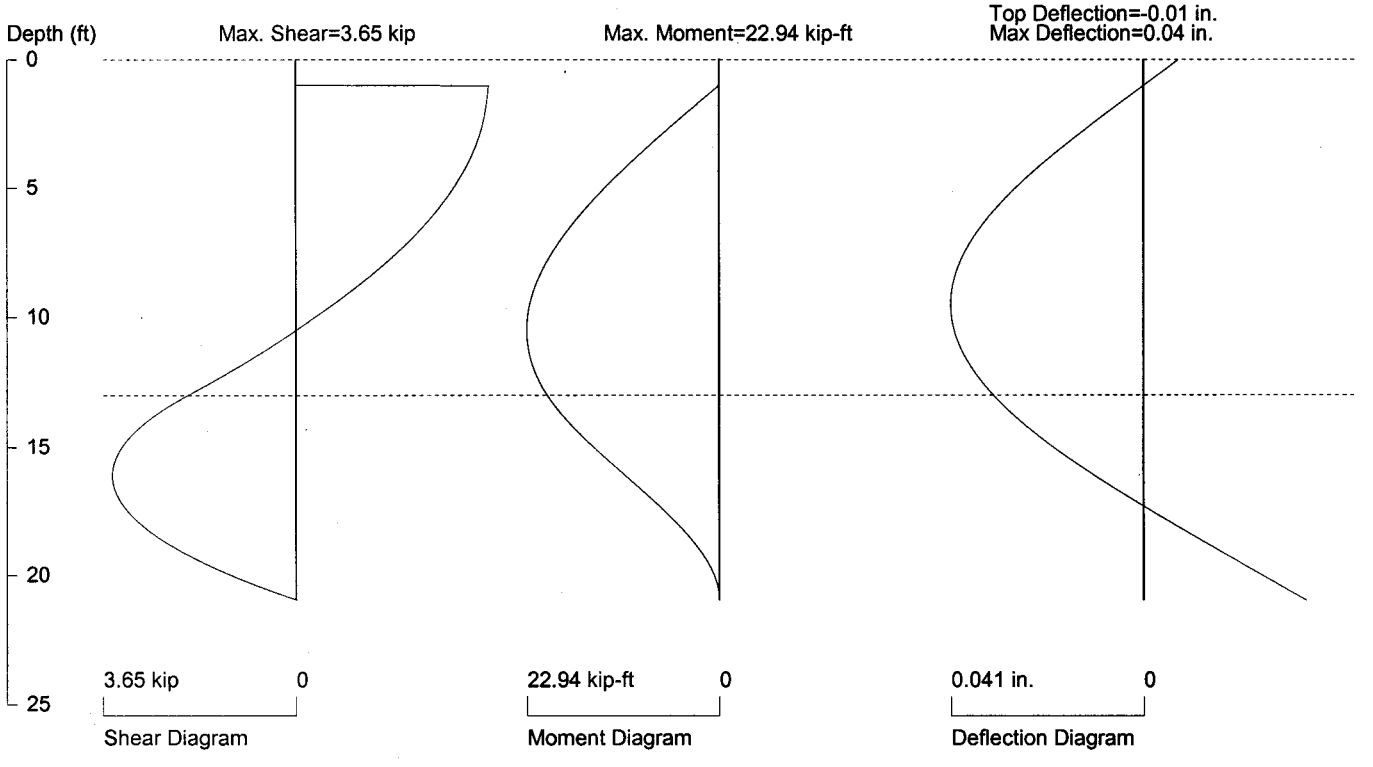

PRESSURE, SHEAR, MOMENT, AND DEFLECTION DIAGRAMS

Based on one soldier pile or one foot spacing of sheet pile

Pile Properties: E (ksi) = 29000, I (in4) = 904

Date: 12/18/2007 File Name: G:\32608\100%Design\ct-Shoring\ElmStreet\2007-1203-Case2_P2.sho

Licensed to

DESIGN RUN 1

Run 1 Cells D, F,

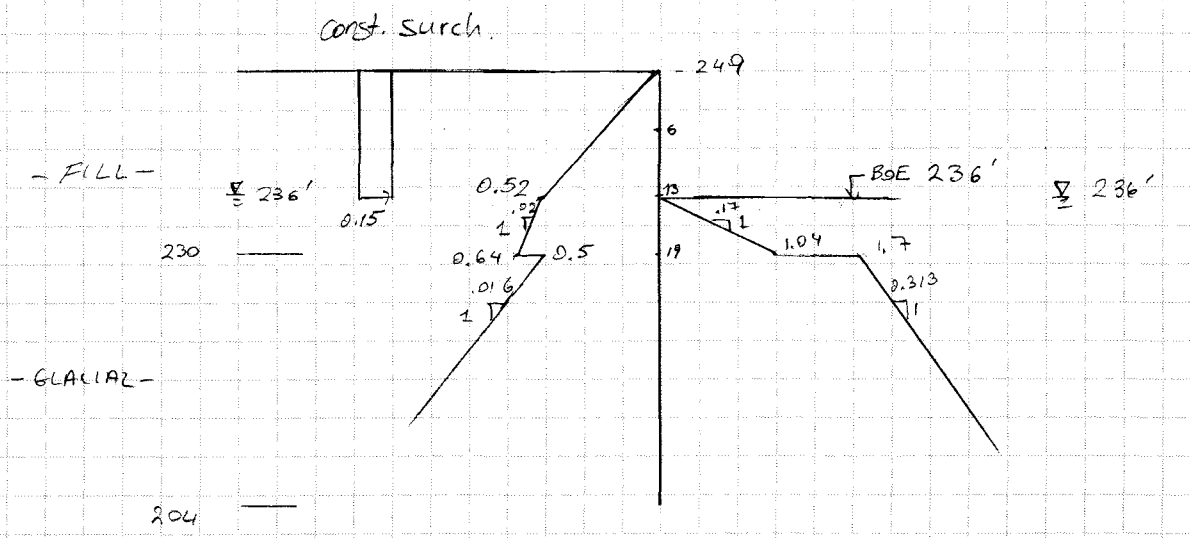

Fill:	Glacial:
$\gamma = 120$ pcf	$\gamma = 125$ pcf
$k_a = 0.33$	$k_a = 0.26$
$k_p = 3.0$	$k_p = 5.0$

Pressure calculations:

For Solder Pile and lagging system, ground water will be lower to bottom of excavation

EL. 236'

$P_F = \gamma \cdot H \cdot k_a = 120 \times 13 \cdot 0.33 = 0.52$ ksf

EL. 230

$P_F = 0.52 + \gamma' H k_a = 0.52 + (120 - 62.4) \times 6 \times 0.33 = 0.64$

slope: $\gamma' \cdot k_a = (120 - 62.4) \cdot 0.33 = 0.02$ ksf/ft

glacial: $P_G = \gamma \cdot H \cdot k_a = [(13 \cdot 120) + 6 \times (120 - 62.4)] \times 0.26$

$= 0.5$ ksf

slope: $\gamma' H = (125 - 62.4) \times 0.26 = 0.016$ ksf

Passive: Fill $P_F = 6 \times (120 - 62.4) \times 3 = 1.04$ kips slope $= 3 \times 57.6 = 0.17$

glacial $P_G = 6 \times (120 - 62.4) \times 5 = 1.7$ kips slope $= 5 \times 62.6 = 0.313$ k/ft

GE Fletcher - Run 1, Cells D, F

32608-003

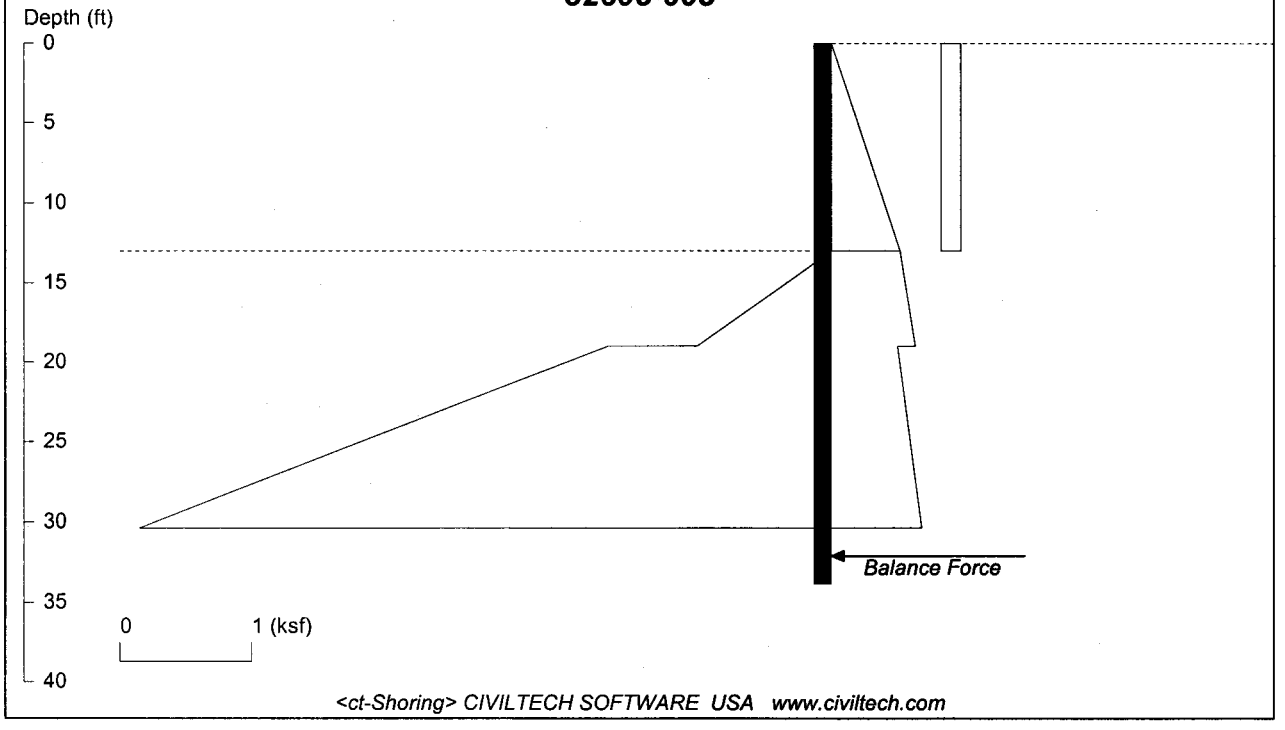

Licensed to

Date: 12/18/2007 File Name: G:\32608\100%Design\ct-Shoring\ElmStreet\2007-1203-Run1.sho

WALL HEIGHT: 13.00 MIN. EMBEDMENT: 20.88 MIN. PILE LENGTH: 33.88
MAX. MOMENT: 326.73 AT DEPTH: 22.39

DRIVING PRESSURE (ACTIVE, WATER, & SURCHARGE) X -- Depth from wall top

No.	X top	Top Pres.	X bot.	Bot. Pres.	Spacing
1	0.00	0.00	13.00	0.52	5.00
2	0.00	0.15	13.00	0.15	5.00

ACTIVE PRESSURE (BELOW DREDGE LINE) Y - Depth from dredge level

No.	Y top	Top Pres.	Pres. Slope	Width
1	0.00	0.52	0.02	1.00
2	6.00	0.50	0.02	1.00

PASSIVE PRESSURE (BELOW DREDGE LINE) Y -- Depth from dredge level
In the calculation, the following passive pressure are divided by a Factor of Safety =1

No.	Y top	Top Pres.	Pres. Slope	Width
1	0.00	0.00	0.17	3.00
2	6.00	1.70	0.31	3.00

UNITS: Length/Depth - ft, Force - kip, Moment - kip-ft, Pressure - ksf, Pres. Slope - kip/ft3, Deflection - in

GE Fletcher - Run 1, Cells D, F

32608-003

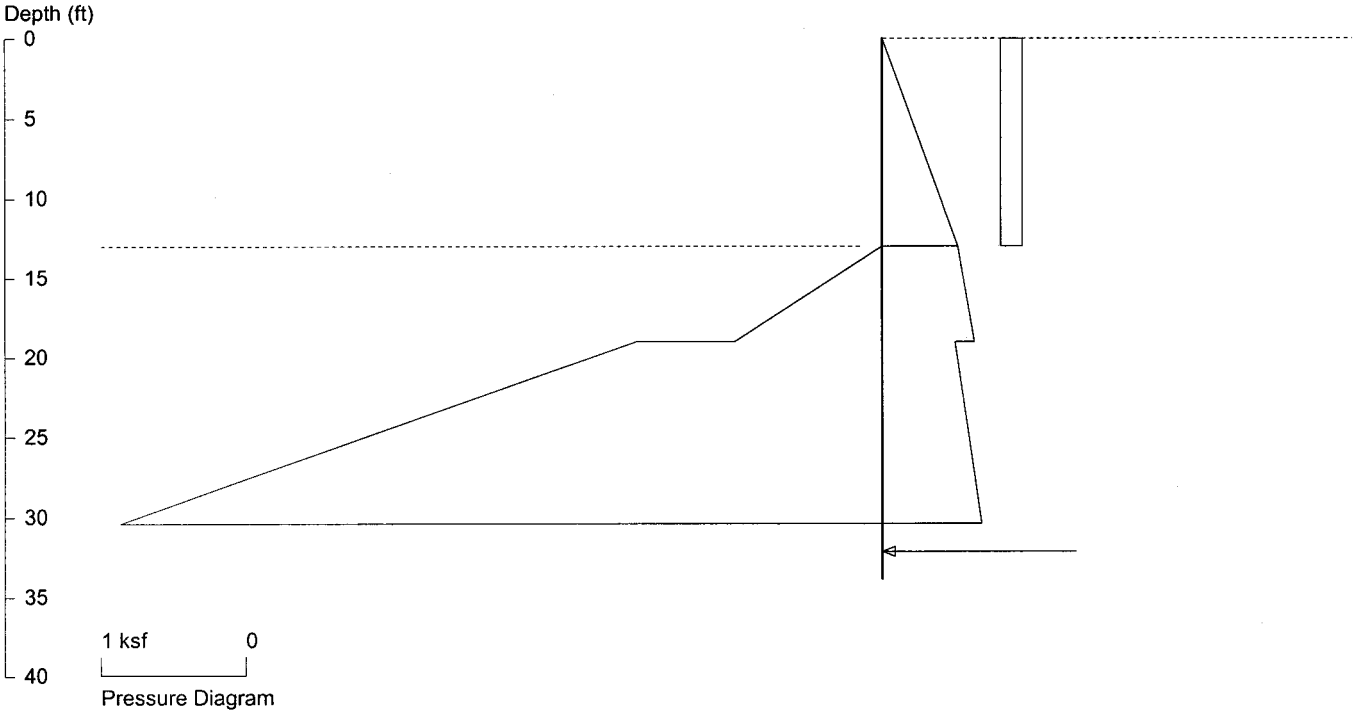

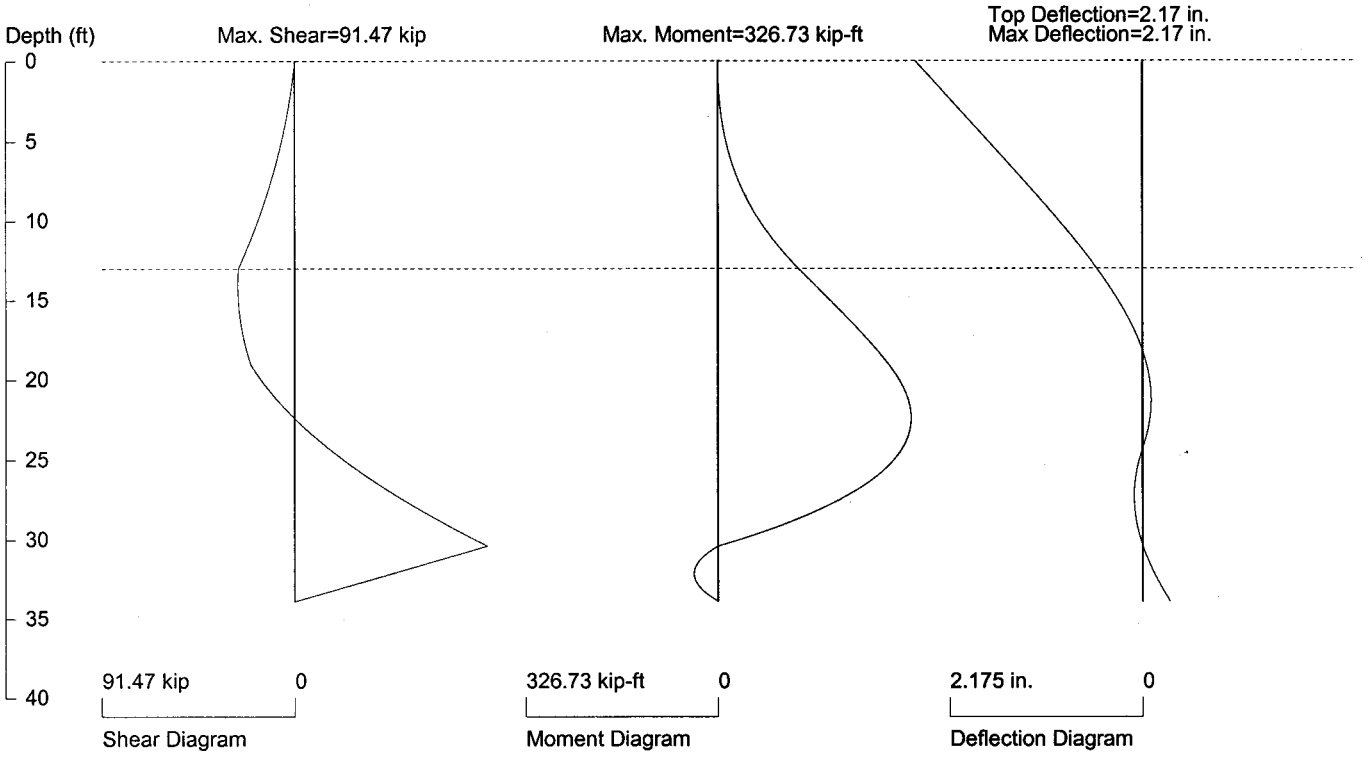

PRESSURE, SHEAR, MOMENT, AND DEFLECTION DIAGRAMS

Based on one soldier pile or one foot spacing of sheet pile

Pile Properties: E (ksi) = 29000, I (in4) = 904

Date: 12/18/2007 File Name: G:\32608\100%Design\ct-Shoring\ElmStreet\2007-1203-Run1.sho

Licensed to

DESIGN RUN 2

Run 2 Cells G, K

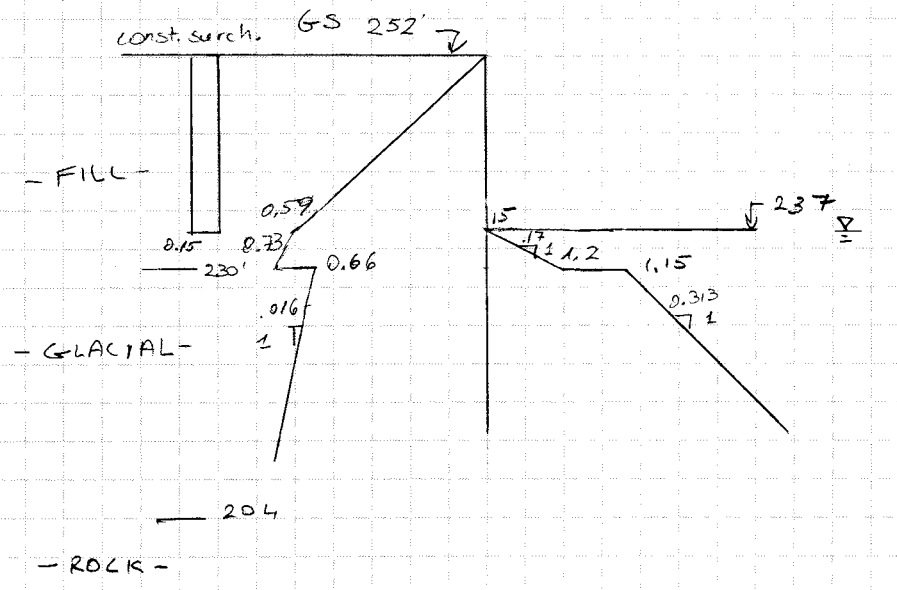

Fill:
$\gamma = 120$ pcf
$K_a = 0.33$ $K_p = 3$
Glacial:
$\gamma = 125$
$K_a = 0.26$ $K_p = 5$

Pressure Calculations:

$P_F = 15 \times 120 \times 0.33 = 0.594$ ksf

@ 230' $P_F = 0.594 + 7 \times (120 - 62.4) \times 0.33 = 0.73$ kips

slope $= (120 - 62.4) \times 0.33 = 0.019$ kips/ft

Glacial @ 230 $P = [18 \times 120 + 7(120 - 62.4)] \times 0.26 = 0.66$ kips

slope $= (125 - 62.4) \times 0.26 = 0.017$ kip/ft

Passive side:

@ 230 $P_F = 7 \times (120 - 62.4) \times 3 = 1.2$ kips

Glacial $P_G = 7 \times (120 - 62.4) \times 5 = 2.02$ kips

GE Fletcher - Run 2, Cells G, K

32608-003

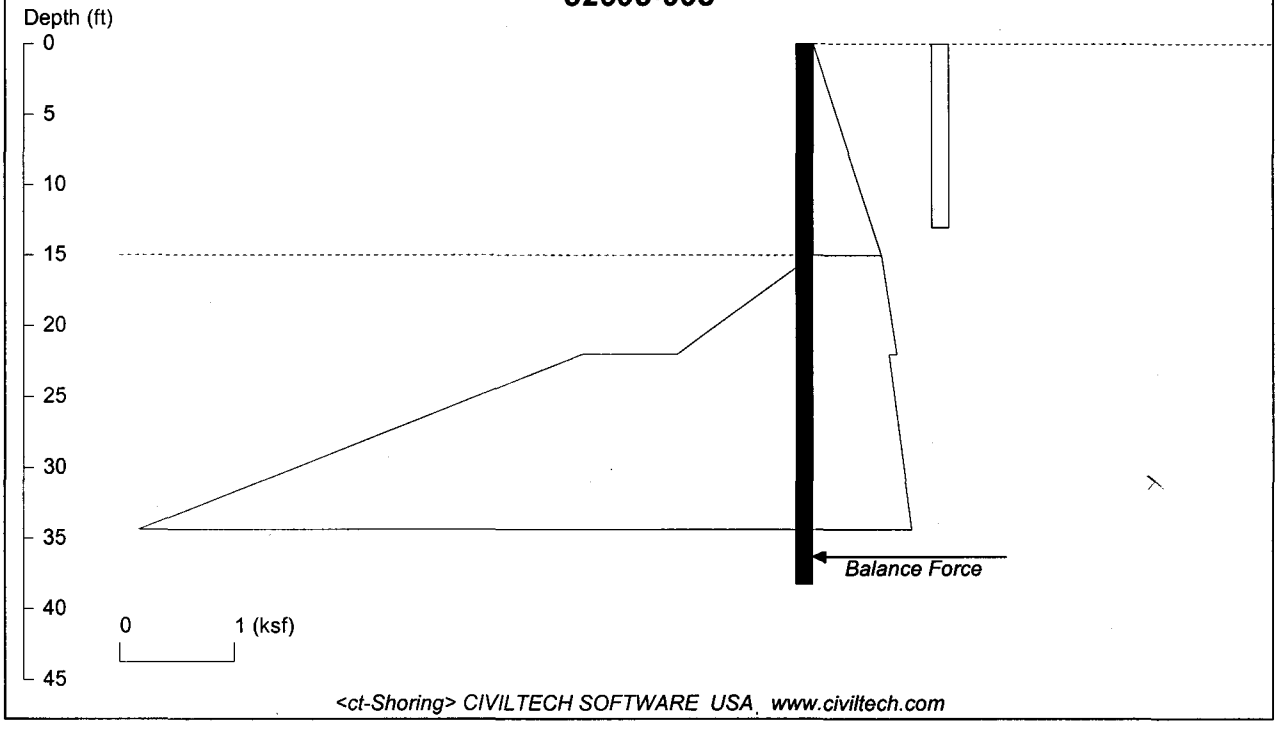

Licensed to

Date: 12/18/2007 File Name: G:\32608\100%Design\ct-Shoring\ElmStreet\2007-1203-Run2.sho

WALL HEIGHT: 15.00 MIN. EMBEDMENT: 23.24 MIN. PILE LENGTH: 38.24
MAX. MOMENT: 449.79 AT DEPTH: 25.45

DRIVING PRESSURE (ACTIVE, WATER, & SURCHARGE) X -- Depth from wall top

No.	X top	Top Pres.	X bot.	Bot. Pres.	Spacing
1	0.00	0.00	15.00	0.59	5.00
2	0.00	0.15	13.00	0.15	5.00

ACTIVE PRESSURE (BELOW DREDGE LINE) Y - Depth from dredge level

No.	Y top	Top Pres.	Pres. Slope	Width
1	0.00	0.59	0.02	1.00
2	7.00	0.66	0.02	1.00

PASSIVE PRESSURE (BELOW DREDGE LINE) Y -- Depth from dredge level
In the calculation, the following passive pressure are divided by a Factor of Safety =1

No.	Y top	Top Pres.	Pres. Slope	Width
1	0.00	0.00	0.17	3.00
2	7.00	2.02	0.31	3.00

UNITS: Length/Depth - ft, Force - kip, Moment - kip-ft, Pressure - ksf, Pres. Slope - kip/ft3, Deflection - in

GE Fletcher - Run 2, Cells G, K

32608-003

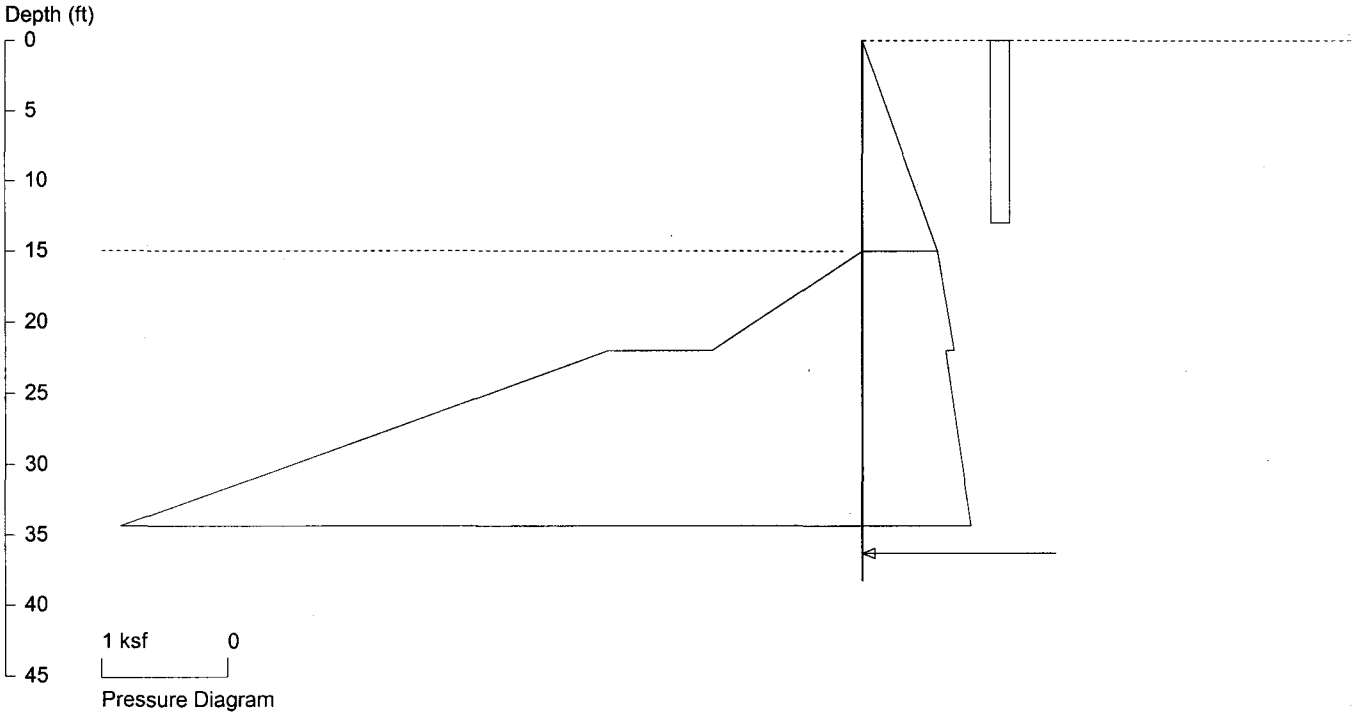

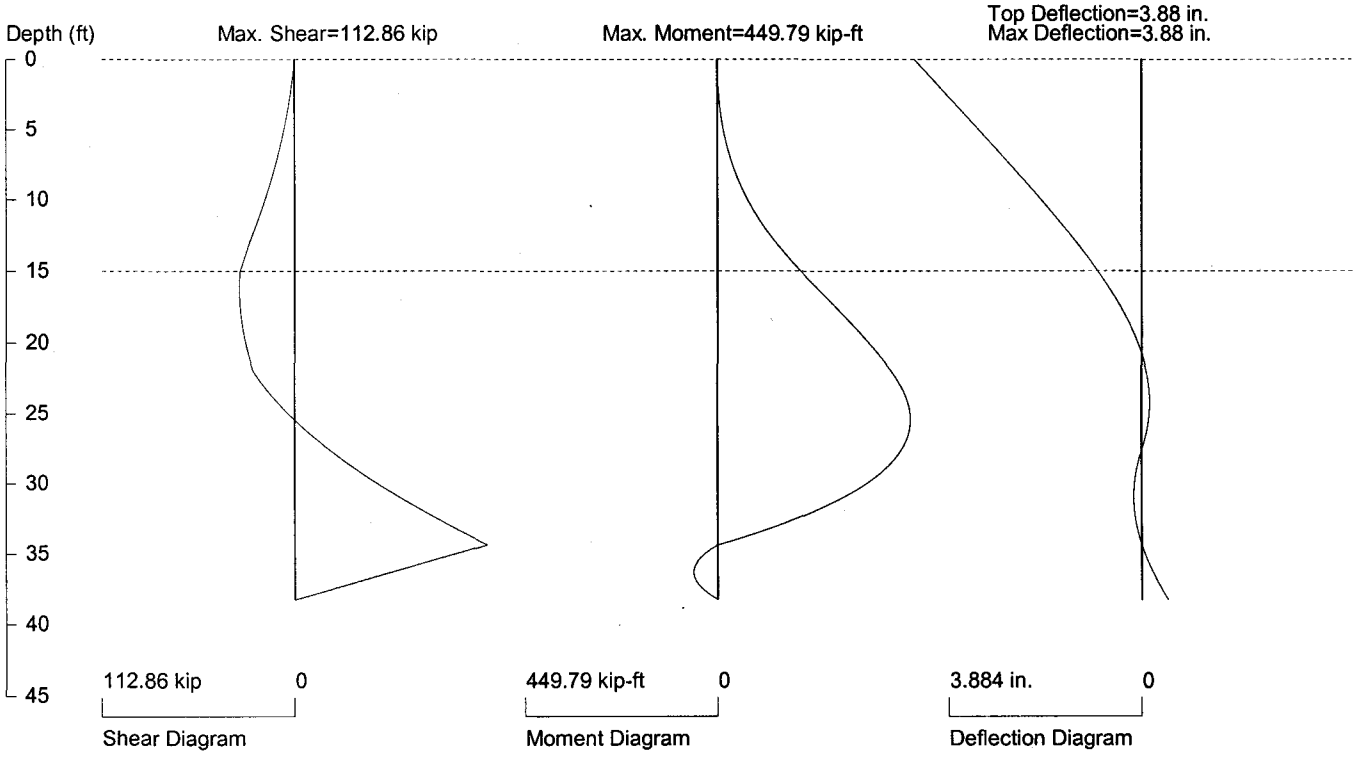

PRESSURE, SHEAR, MOMENT, AND DEFLECTION DIAGRAMS

Based on one soldier pile or one foot spacing of sheet pile

Pile Properties: E (ksi) = 29000, I (in4) = 904

Date: 12/18/2007 File Name: G:\32608\100%Design\ct-Shoring\ElmStreet\2007-1203-Run2.sho

Licensed to

DESIGN RUN 3

Run 3 Cells AA1, P2

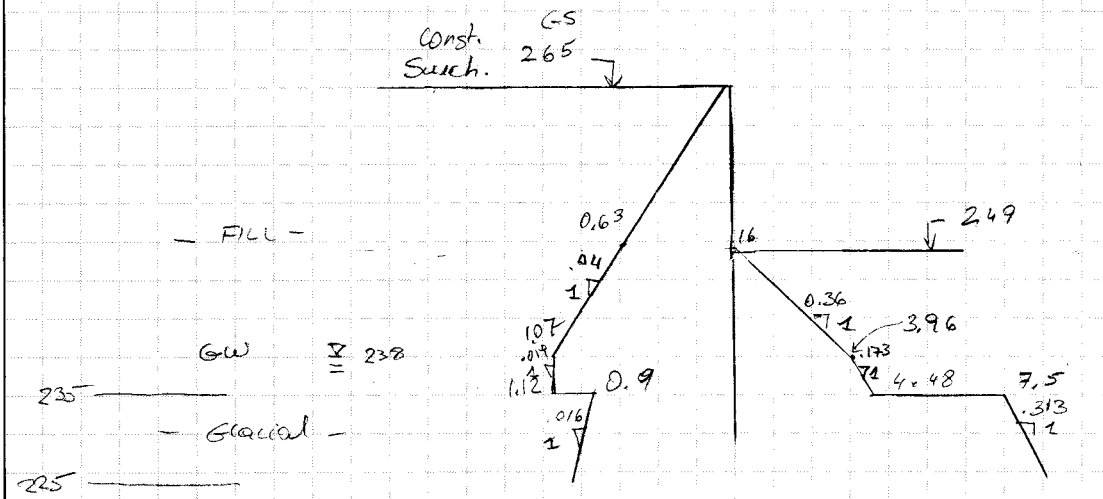

Fill $\gamma = 120$ pcf $k_a = 0.33$ $k_p = 3$

Glacial $\gamma = 125$ pcf $k = 0.26$ $k_p = 5$

Active Pressures

Fill $P_F = 16 \times 120 \times 0.33 = 0.63$ kip

@ 238 $P_F = 0.63 + (249-238) \times 120 \times 0.33 = 1.07$ ksf

@ 235 $P_F = 1.07 + 3(120-62.4) \times 0.33 = 1.12$ ksf

Glacial $P_G = [(265-238) \times 120 + 3 \times (120-62.4)] \times 0.26 = 0.9$

Passive:

Fill $P_F = (249-238) \times 120 \times 3 = 3.96$ slope $120 \times 3 = 0.36$ ksf

@ 238 $P_F = 3.96 + 3 \times (120-62.4) \times 3 = 4.48$

Glacial $P_G = [11 \times 120 + 3 \times (120-62.4)] \times 5 = 7.5$

No construction surcharge due to cemetery

GE Fletcher - Run 3, Cells AA1,P2

32608-003

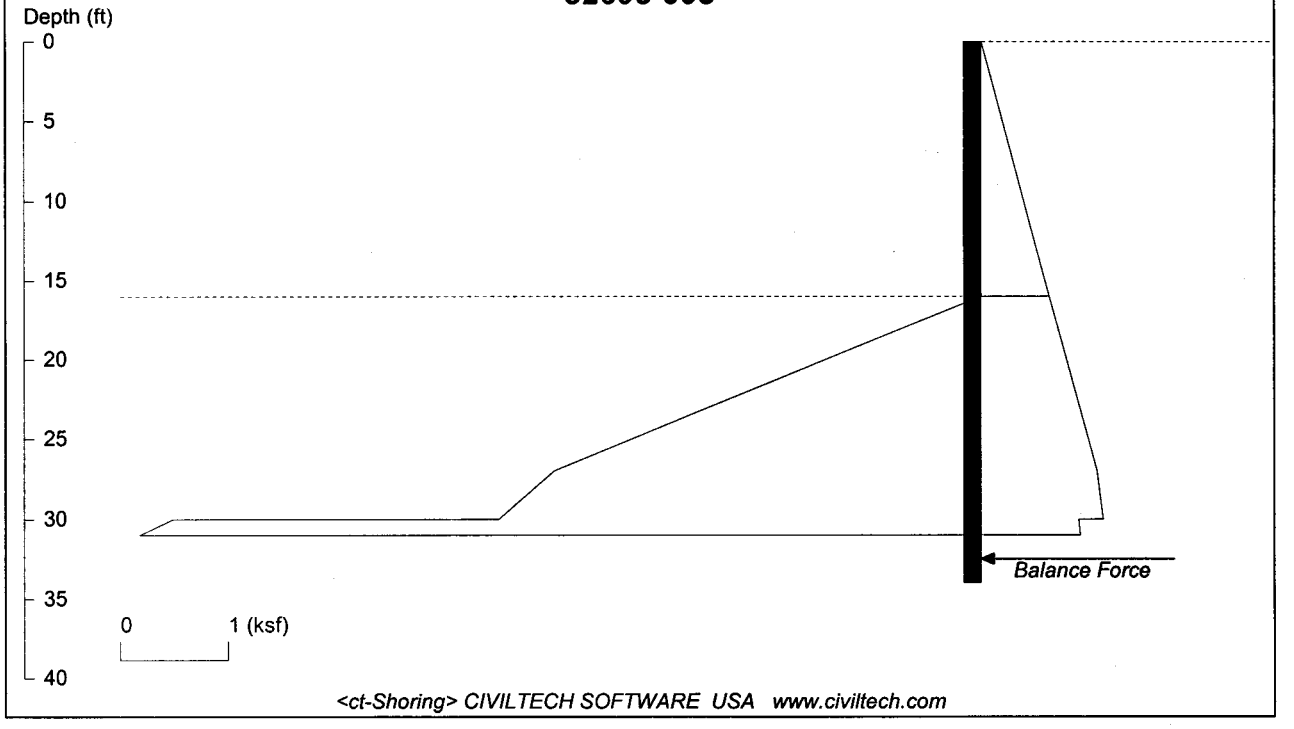

Licensed to

Date: 12/18/2007 File Name: G:\32608\100%Design\ct-Shoring\ElmStreet\2007-1203-Run3.sho

WALL HEIGHT: 16.00 MIN. EMBEDMENT: 17.99 MIN. PILE LENGTH: 33.99
MAX. MOMENT: 268.03 AT DEPTH: 23.59

DRIVING PRESSURE (ACTIVE, WATER, & SURCHARGE) X -- Depth from wall top

No.	X top	Top Pres.	X bot.	Bot. Pres.	Spacing
1	0.00	0.00	16.00	0.63	5.00

ACTIVE PRESSURE (BELOW DREDGE LINE) Y - Depth from dredge level

No.	Y top	Top Pres.	Pres. Slope	Width
1	0.00	0.63	0.04	1.00
2	11.00	1.07	0.02	1.00
3	14.00	0.90	0.02	1.00

PASSIVE PRESSURE (BELOW DREDGE LINE) Y -- Depth from dredge level
In the calculation, the following passive pressure are divided by a Factor of Safety =1

No.	Y top	Top Pres.	Pres. Slope	Width
1	0.00	0.00	0.36	3.00
2	11.00	3.96	0.17	3.00
3	14.00	7.50	0.31	3.00

UNITS: Length/Depth - ft, Force - kip, Moment - kip-ft, Pressure - ksf, Pres. Slope - kip/ft3, Deflection - in

GE Fletcher - Run 3, Cells AA1,P2

32 of 58

32608-003

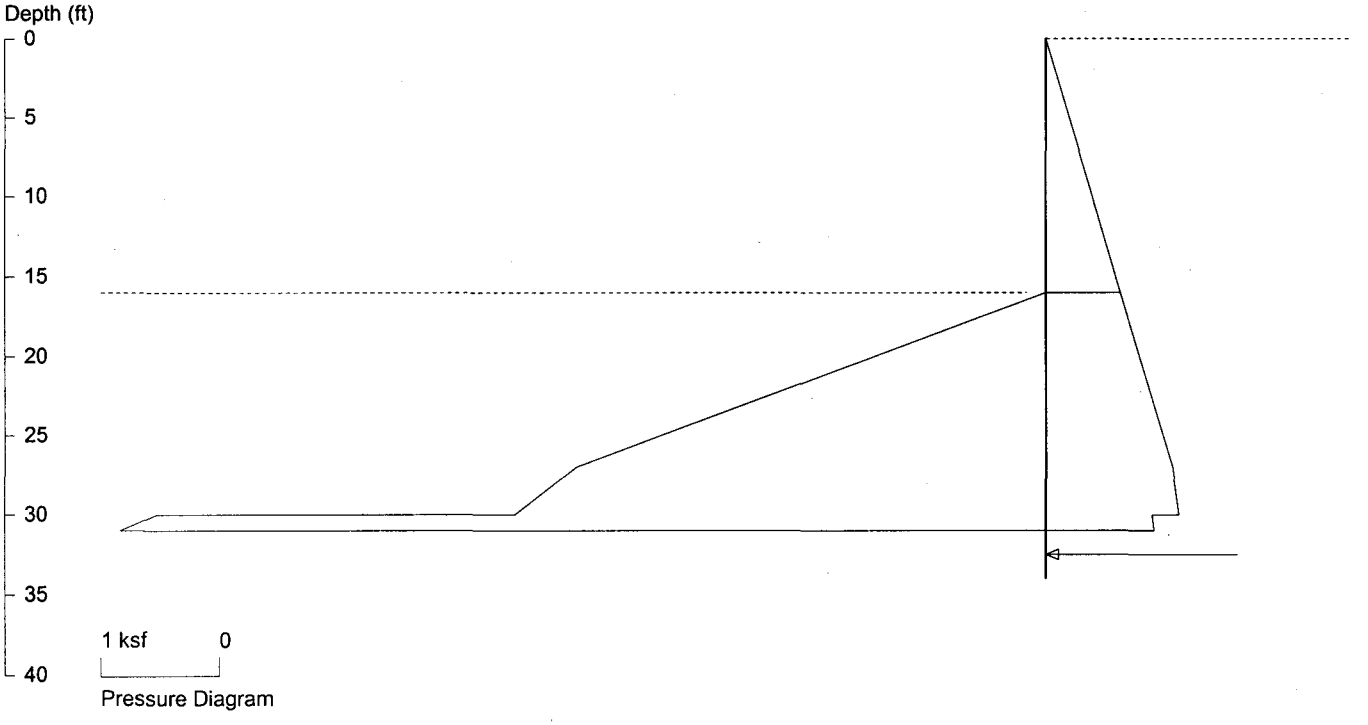

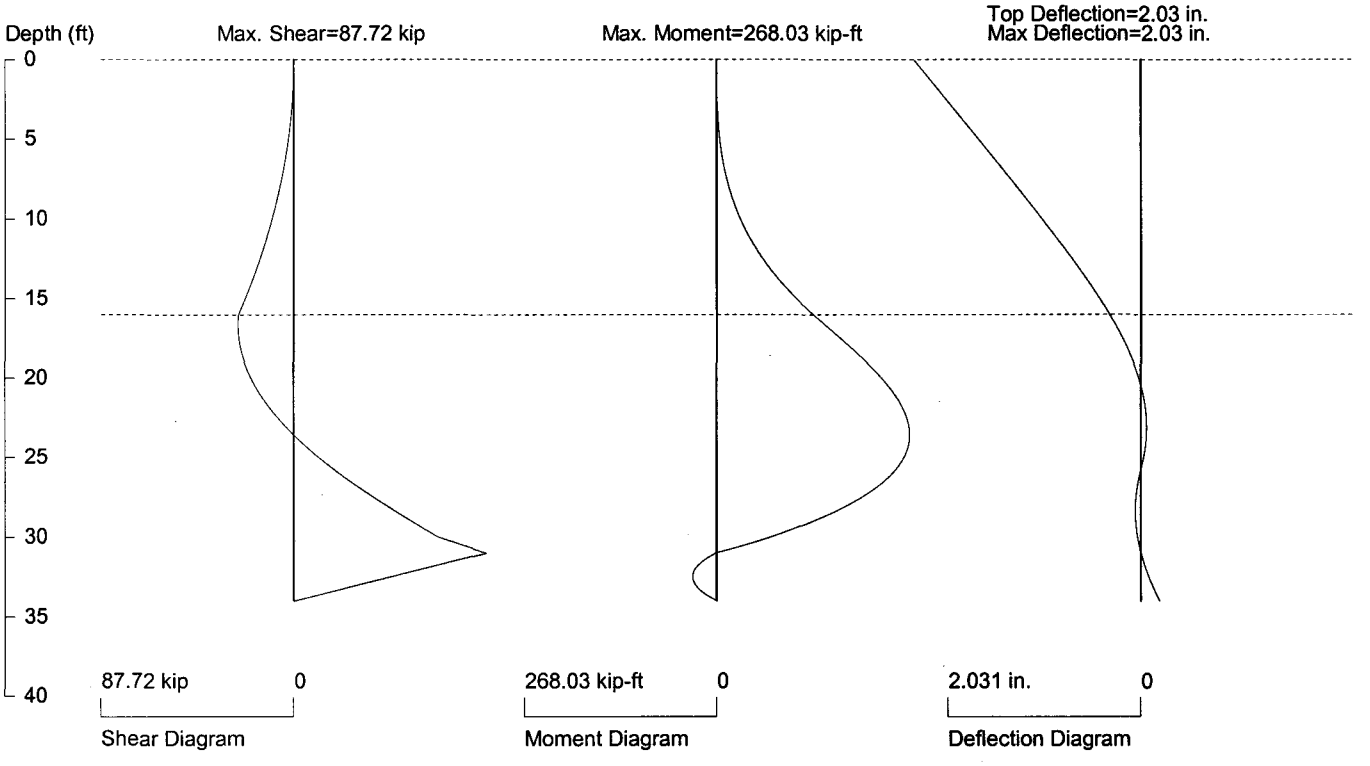

PRESSURE, SHEAR, MOMENT, AND DEFLECTION DIAGRAMS

Based on one soldier pile or one foot spacing of sheet pile

Pile Properties: E (ksi) = 29000, I (in4) = 904

Date: 12/18/2007 File Name: G:\32608\100%Design\ct-Shoring\ElmStreet\2007-1203-Run3.sho

Licensed to

DESIGN RUN 4

HALEY & ALDRICH

Calculations

File No.	32608-003
Sheet	34 of 58
Date	12/15/07
Computed By	BV
Checked By	DRS
Client	
Project	
Subject	

Run 4 Cells Z, Y

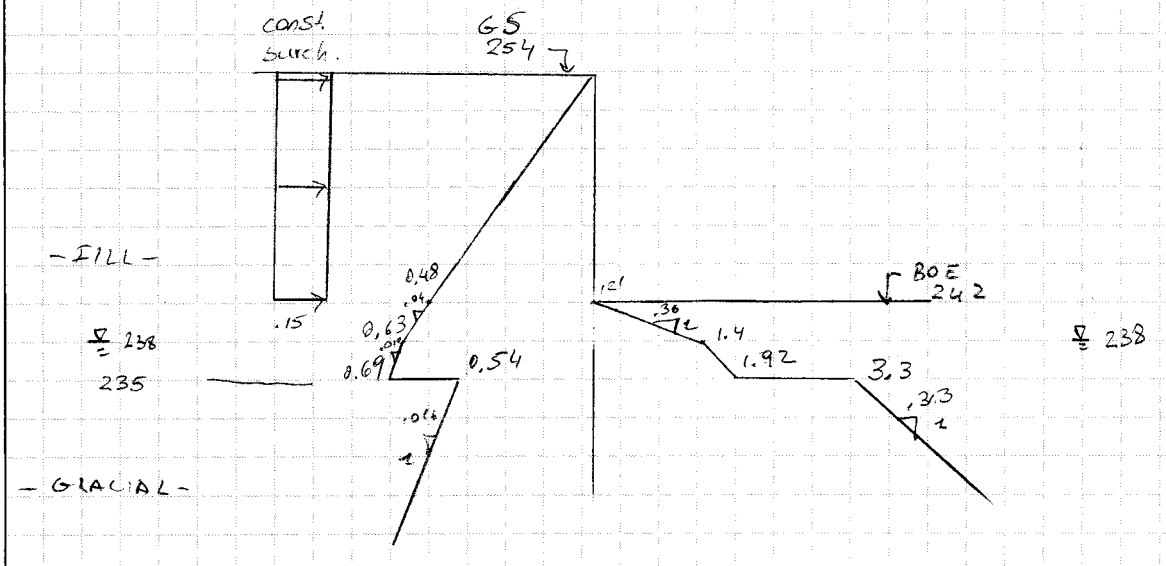

Fill:
$\gamma = 120$ pcf $\phi = 30°$ $K_a = 0.33$ $K_p = 3.0$

Glacial:
$\gamma = 125$ pcf $\phi = 36°$ $K_a = 0.26$ $K_p = 5.0$

Pressure calcs:

Active:

Fill: $12 \times 120 \times 0.33 = 0.48$ ksf

$0.48 + (242 - 238) \times 120 \times 0.33 = 0.63$

@ 235 $0.63 + 3 \times (120 - 62.4) \times 0.33 = 0.69$

Glacial: $[16 \times 120 + 3 \times (120 - 62.4)] \times 0.26 = 0.54$ ksf

Passive: @238 $4 \times 120 \times 3 = 1.4$ ksf @ 235 $1.4 + 3(120 - 62.4) \times 3 = 1.92$

Glacial $[4 \times 120 + 3 \times (120 - 62.4)] \times 5 = 3.3$ ksf

GE Fletcher - Run 4, Cells Z,Y

32608-003

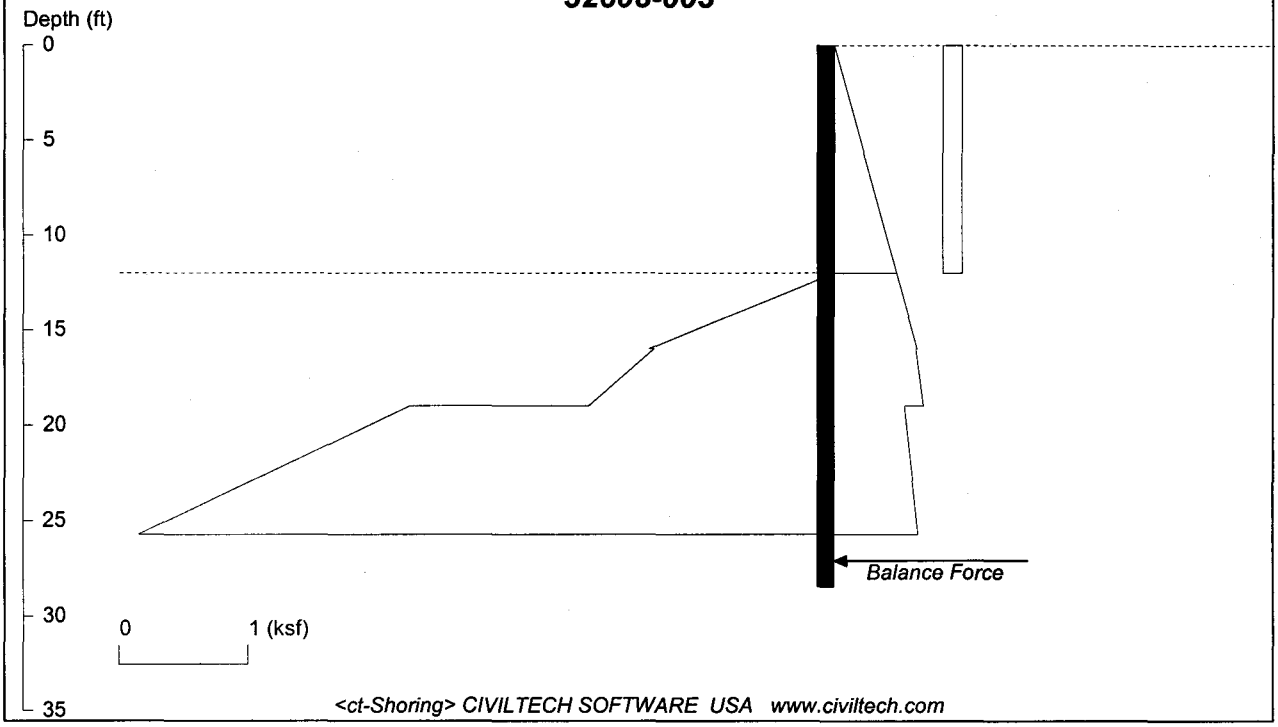

Licensed to

Date: 12/18/2007 File Name: G:\32608\100%Design\ct-Shoring\ElmStreet\2007-1203-Run4.sho

WALL HEIGHT: 12.00 MIN. EMBEDMENT: 16.47 MIN. PILE LENGTH: 28.47
MAX. MOMENT: 231.55 AT DEPTH: 19.43

DRIVING PRESSURE (ACTIVE, WATER, & SURCHARGE) X -- Depth from wall top

No.	X top	Top Pres.	X bot.	Bot. Pres.	Spacing
1	0.00	0.00	12.00	0.48	5.00
2	0.00	0.15	12.00	0.15	5.00

ACTIVE PRESSURE (BELOW DREDGE LINE) Y - Depth from dredge level

No.	Y top	Top Pres.	Pres. Slope	Width
1	0.00	0.48	0.04	1.00
2	4.00	0.63	0.02	1.00
3	7.00	0.54	0.02	1.00

PASSIVE PRESSURE (BELOW DREDGE LINE) Y -- Depth from dredge level
In the calculation, the following passive pressure are divided by a Factor of Safety =1

No.	Y top	Top Pres.	Pres. Slope	Width
1	0.00	0.00	0.36	3.00
2	4.00	1.40	0.17	3.00
3	7.00	3.30	0.31	3.00

UNITS: Length/Depth - ft, Force - kip, Moment - kip-ft, Pressure - ksf, Pres. Slope - kip/ft3, Deflection - in

GE Fletcher - Run 4, Cells Z,Y

32608-003

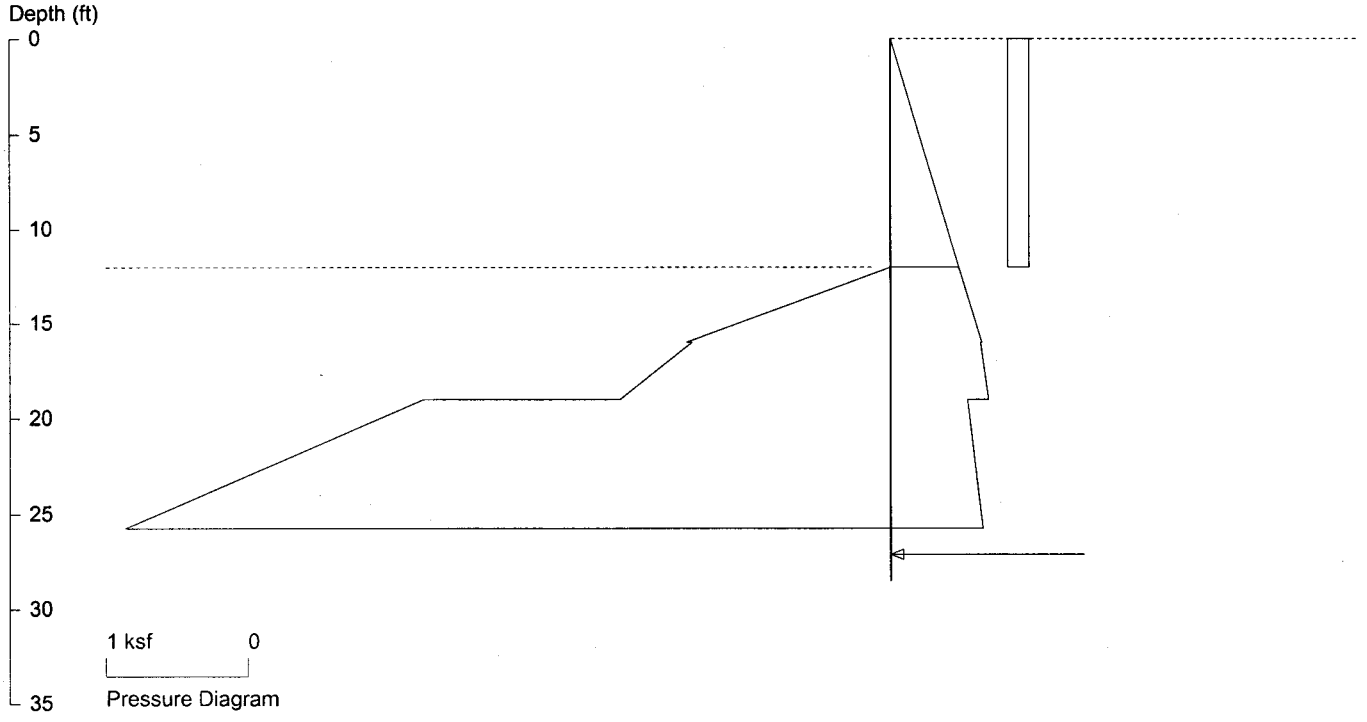

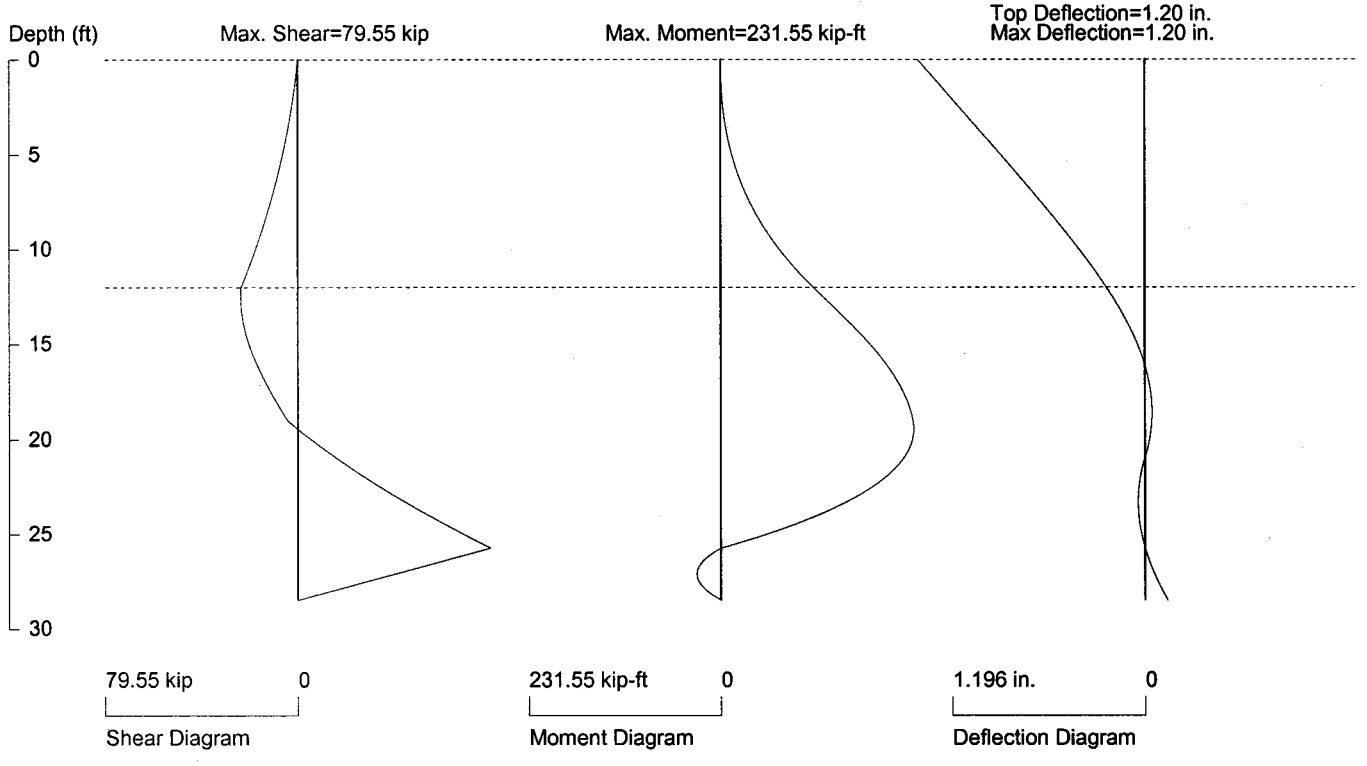

PRESSURE, SHEAR, MOMENT, AND DEFLECTION DIAGRAMS

Based on one soldier pile or one foot spacing of sheet pile

Pile Properties: E (ksi) = 29000, I (in4) = 904

Date: 12/18/2007 File Name: G:\32608\100%Design\ct-Shoring\ElmStreet\2007-1203-Run4.sho

Licensed to

DESIGN RUN 5

Run 5 Cell V

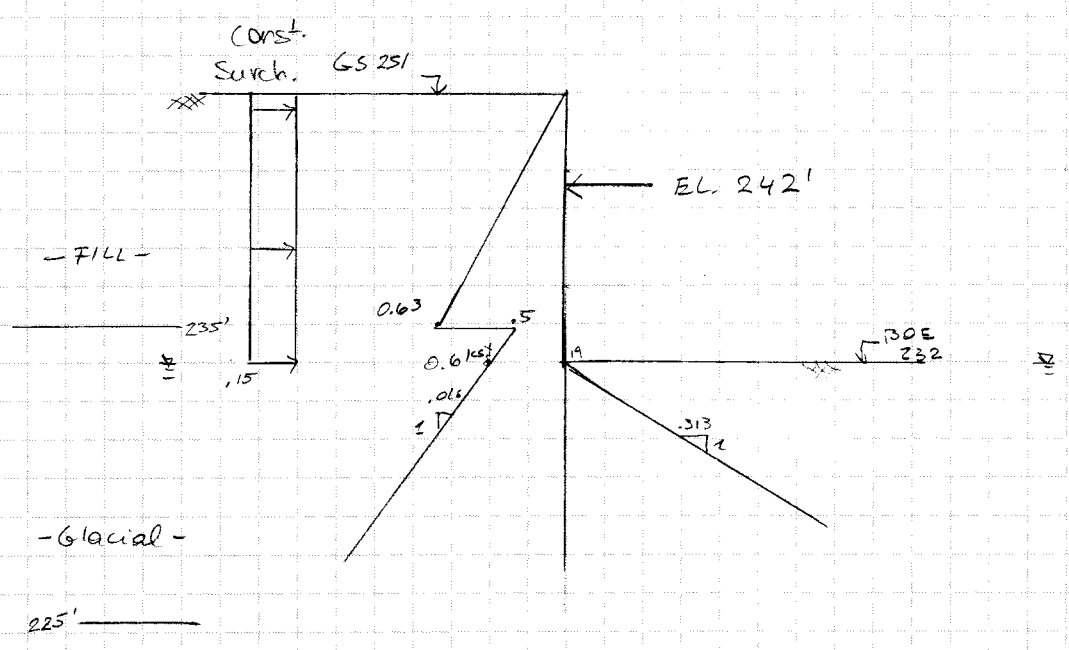

FILL:
$\gamma = 120$ pcf $\phi = 30°$ $k_a = 0.33$ $k_p = 3$

Glacial:
$\gamma = 125$ pcf $\phi = 36°$ $k_a = 0.26$ $k_p = 5$

Pressure Calculations:

FILL: $(251-235) \times 120 \times 0.33 = 0.63$ ksf

Glacial $16 \times 120 \times 0.26 = 0.5$ ksf

@ 232 $0.5 + 3 \times (125) \cdot 0.26 = 0.6$ ksf

Passive

Fill $7' \times (120 - 62.4) \times 3 = 1.21$ ksf

Glacial $7 \times (120 - 62.4) \cdot 5 = 2.02$ ksf

GE Fletcher - Run 5, Cell V

32608-003

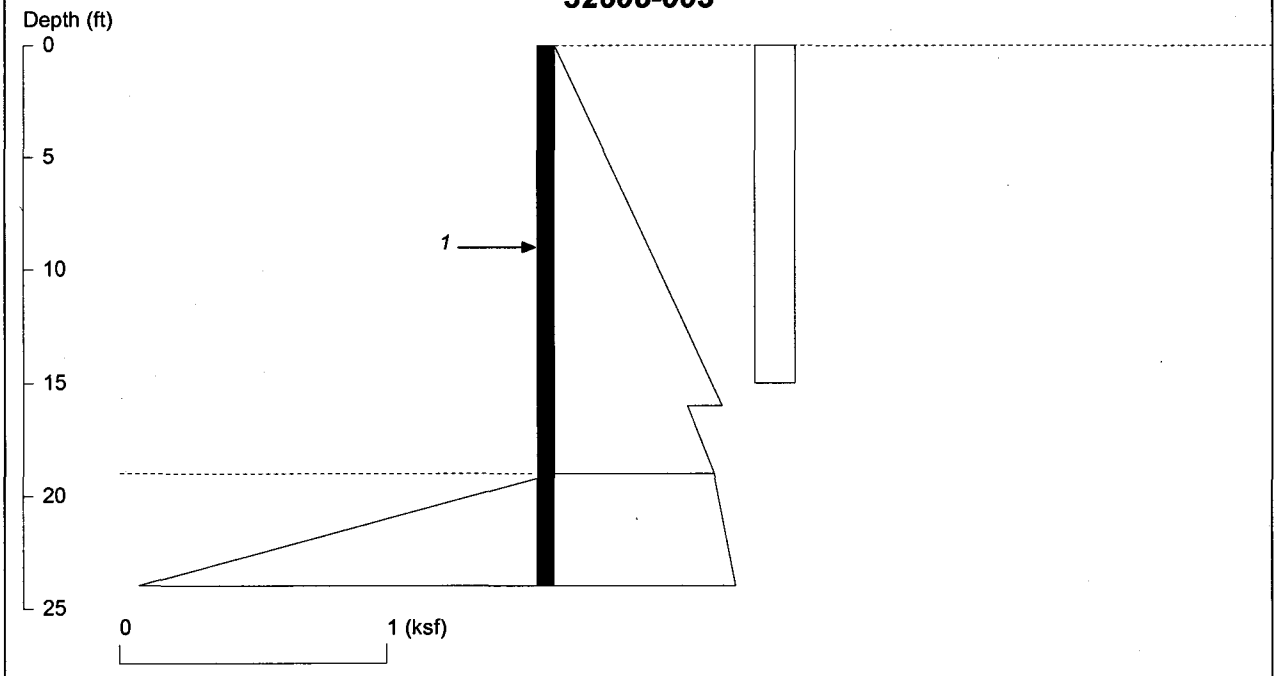

<ct-Shoring> CIVILTECH SOFTWARE USA www.civiltech.com

Licensed to

Date: 12/28/2007 File Name: G:\32608\100%Design\ct-Shoring\ElmStreet\2007-1203-Run5_Cell_V.sho

WALL HEIGHT: 19.00 MIN. EMBEDMENT: 4.97 (8~10 recommended) MIN. PILE LENGTH: 23.97
MAX. MOMENT: 65.15 AT DEPTH: 9.00

BRACE, TIEBACK, OR DEADMEN ANCHOR (Spacing = 1):

No.	DEPTH	ANGLE	TOTAL	HORIZ.	VERT.	L_free	L_fixed
1	9.0	0.0	7.5	7.5	0.0	N/A	N/A

TOTAL VERTICAL FORCE: 0.0

DRIVING PRESSURE (ACTIVE, WATER, & SURCHARGE) X -- Depth from wall top

No.	X top	Top Pres.	X bot.	Bot. Pres.	Spacing
1	0.00	0.00	16.00	0.63	6.00
2	16.00	0.50	19.00	0.60	6.00
3	0.00	0.15	15.00	0.15	6.00

ACTIVE PRESSURE (BELOW DREDGE LINE) Y - Depth from dredge level

No.	Y top	Top Pres.	Pres. Slope	Width
1	0.00	0.60	0.02	1.00

PASSIVE PRESSURE (BELOW DREDGE LINE) Y -- Depth from dredge level
In the calculation, the following passive pressure are divided by a Factor of Safety =1

No.	Y top	Top Pres.	Pres. Slope	Width
1	0.00	0.00	0.31	3.00

UNITS: Length/Depth - ft, Force - kip, Moment - kip-ft, Pressure - ksf, Pres. Slope - kip/ft3, Deflection - in

GE Fletcher - Run 5, Cell V

32608-003

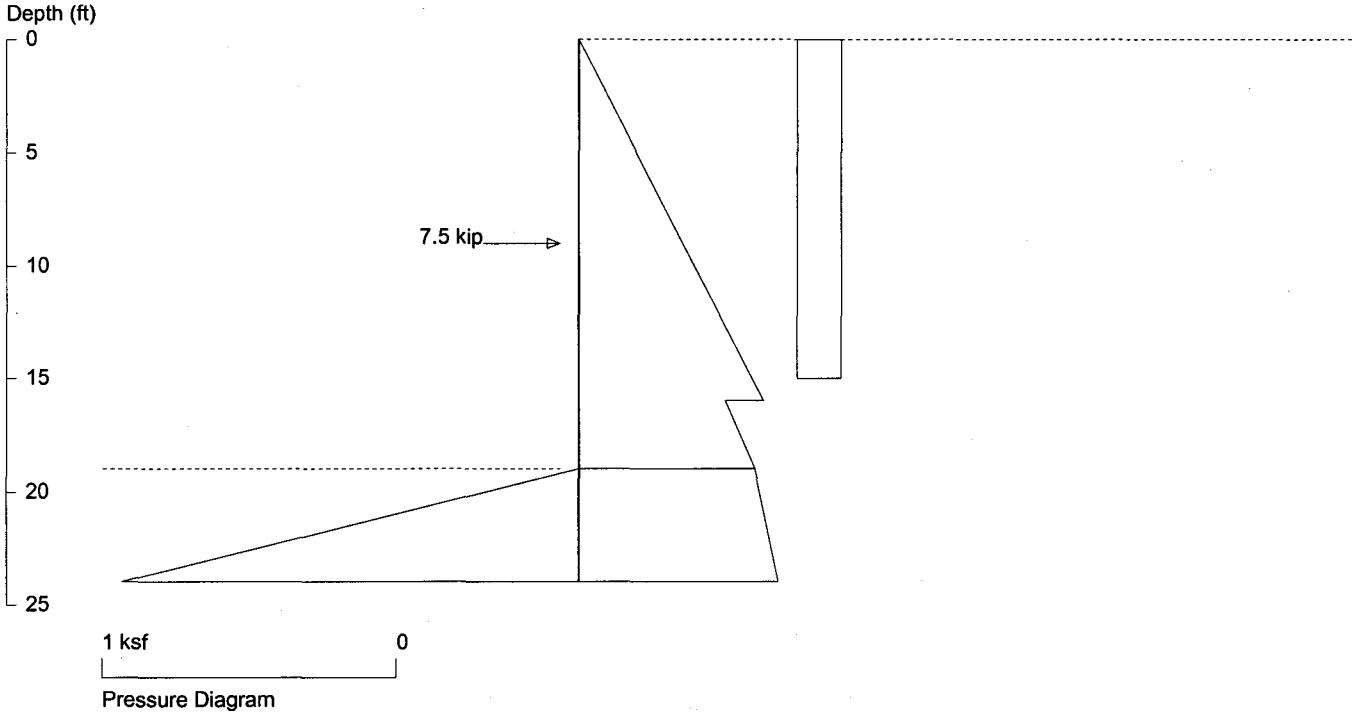

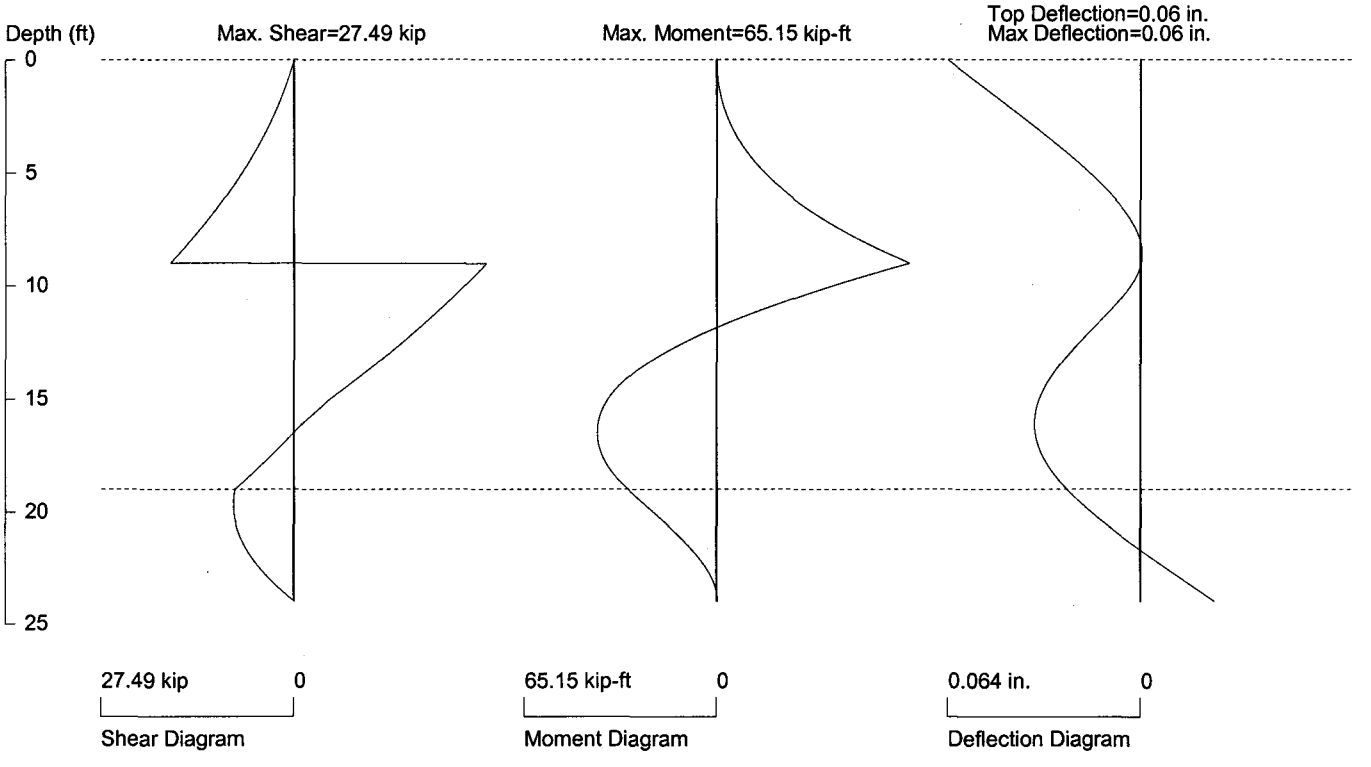

PRESSURE, SHEAR, MOMENT, AND DEFLECTION DIAGRAMS

Based on one soldier pile or one foot spacing of sheet pile

Pile Properties: E (ksi) = 29000, I (in4) = 904

Date: 12/28/2007 File Name: G:\32608\100%Design\ct-Shoring\ElmStreet\2007-1203-Run5_Cell_V.sho

Licensed to

DESIGN RUN 6

Run 6 cell 2

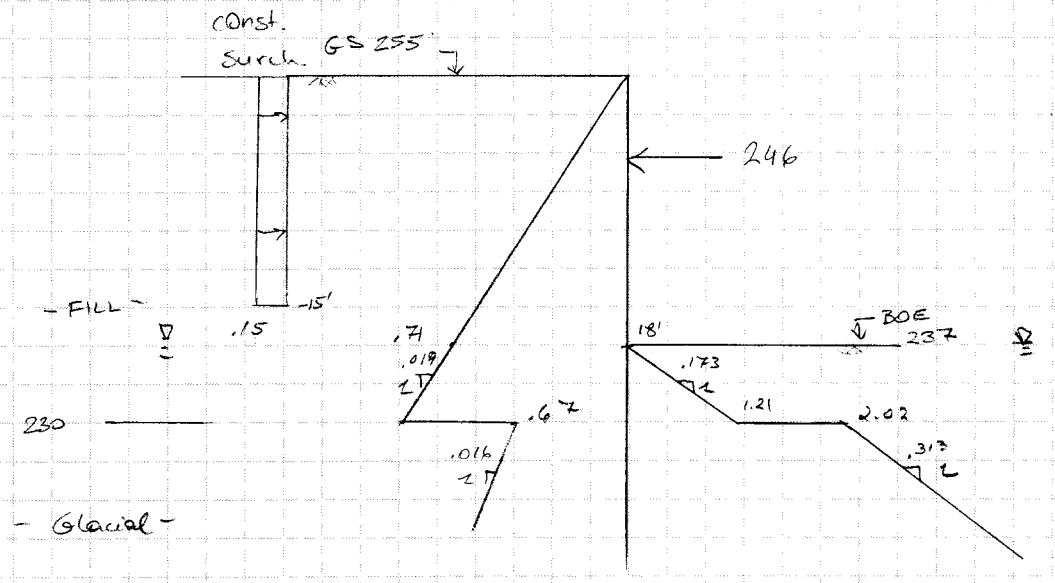

Fill

$\gamma = 120$ $\phi = 30°$ $k_a = 0.33$ $k_p = 3$

Glacial:

$\gamma = 125$ $\phi = 35°$ $k_a = 0.26$ $k_p = 5$

Pressure calcs:

Fill: $18' \times 120 \times 0.33 = 0.71$ ksf

Glacial $18 \times 120 + 7 \times (120 - 62.4) = 0.67$

Passive:

Fill $7 \times (120 - 62.4) \times 3 = 1.21$ ksf

Glacial $7 \times (120 - 62.4) \times 5 = 2.02$

GE Fletcher - Run 6, Cell Q

32608-003

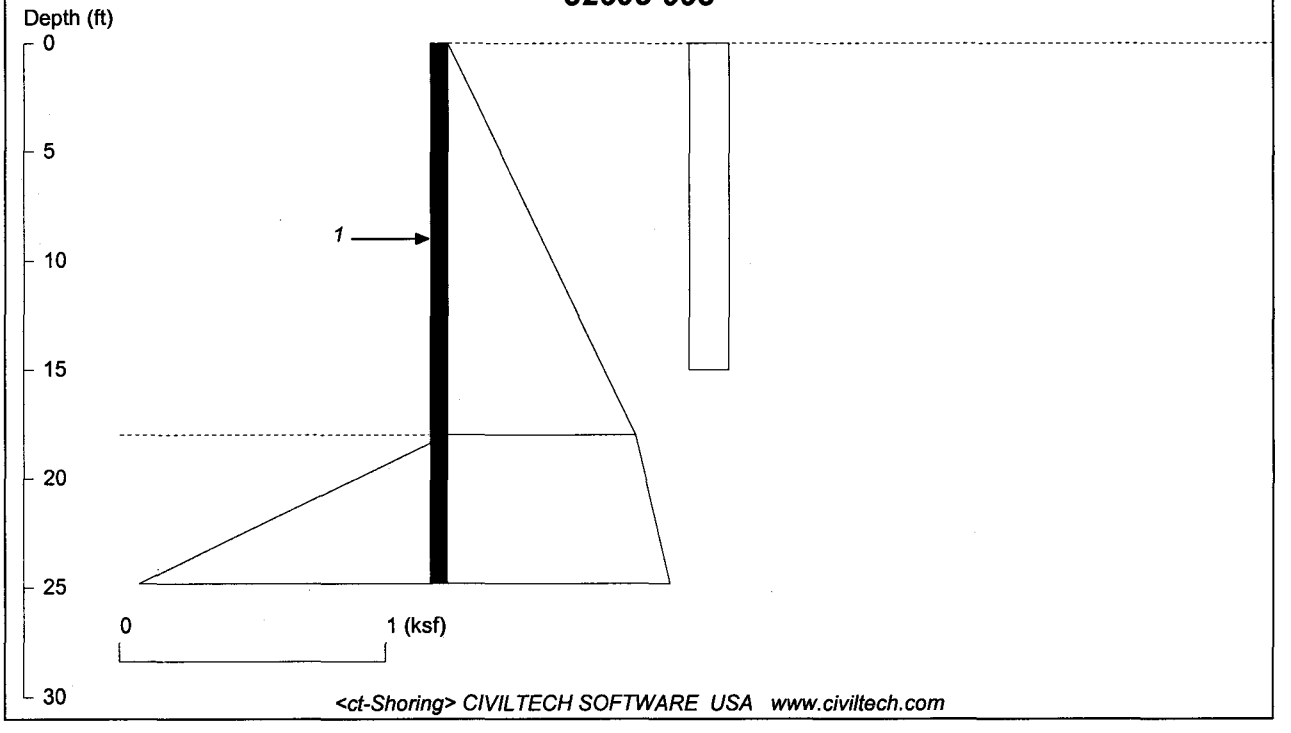

Licensed to

Date: 12/28/2007 File Name: G:\32608\100%Design\ct-Shoring\ElmStreet\2007-1203-Run6_Cell_Q.sho

WALL HEIGHT: 18.00 MIN. EMBEDMENT: 6.82 (8~10 recommended) MIN. PILE LENGTH: 24.82
MAX. MOMENT: 65.21 AT DEPTH: 9.00

BRACE, TIEBACK, OR DEADMEN ANCHOR (Spacing = 1):

No.	DEPTH	ANGLE	TOTAL	HORIZ.	VERT.	L_free	L_fixed
1	9.0	0.0	7.5	7.5	0.0	N/A	N/A

TOTAL VERTICAL FORCE: 0.0

DRIVING PRESSURE (ACTIVE, WATER, & SURCHARGE) X -- Depth from wall top

No.	X top	Top Pres.	X bot.	Bot. Pres.	Spacing
1	0.00	0.00	18.00	0.71	6.00
2	0.00	0.15	15.00	0.15	6.00

ACTIVE PRESSURE (BELOW DREDGE LINE) Y - Depth from dredge level

No.	Y top	Top Pres.	Pres. Slope	Width
1	0.00	0.71	0.02	1.00

PASSIVE PRESSURE (BELOW DREDGE LINE) Y -- Depth from dredge level
In the calculation, the following passive pressure are divided by a Factor of Safety =1

No.	Y top	Top Pres.	Pres. Slope	Width
1	0.00	0.00	0.17	3.00

UNITS: Length/Depth - ft, Force - kip, Moment - kip-ft, Pressure - ksf, Pres. Slope - kip/ft3, Deflection - in

GE Fletcher - Run 6, Cell Q

32608-003

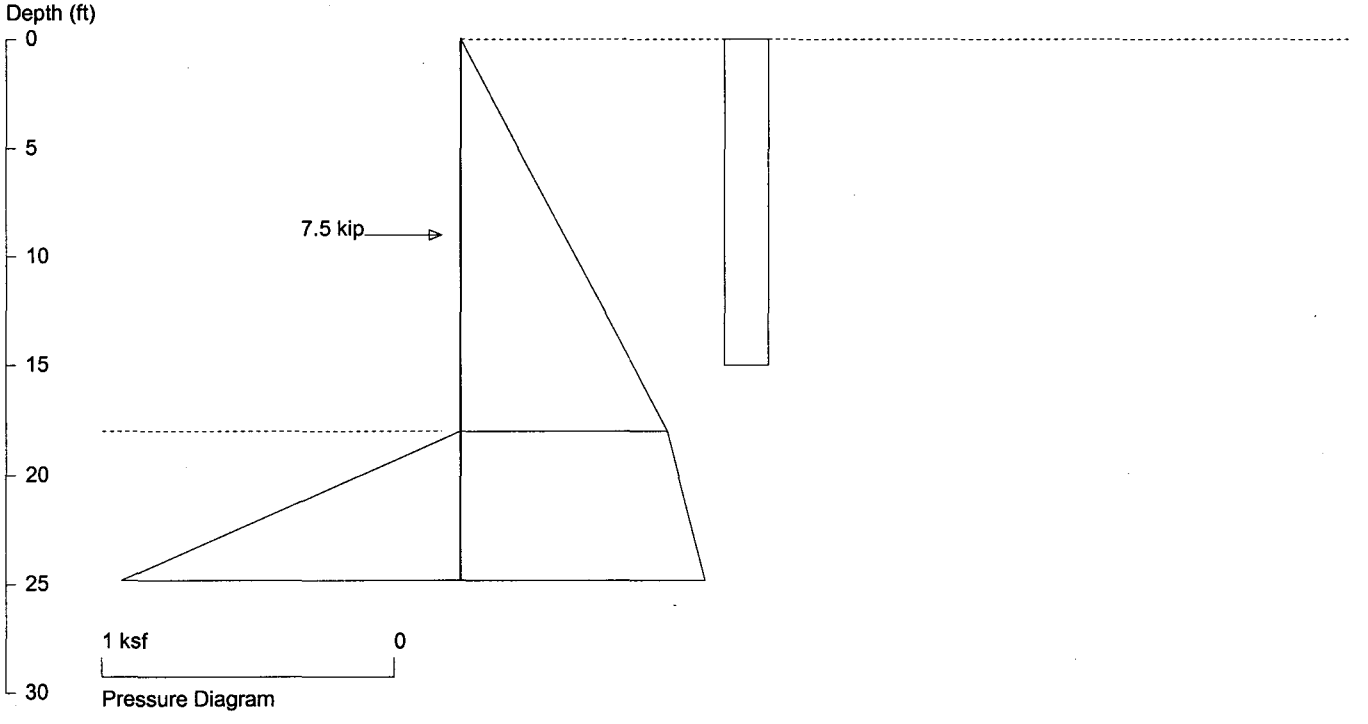

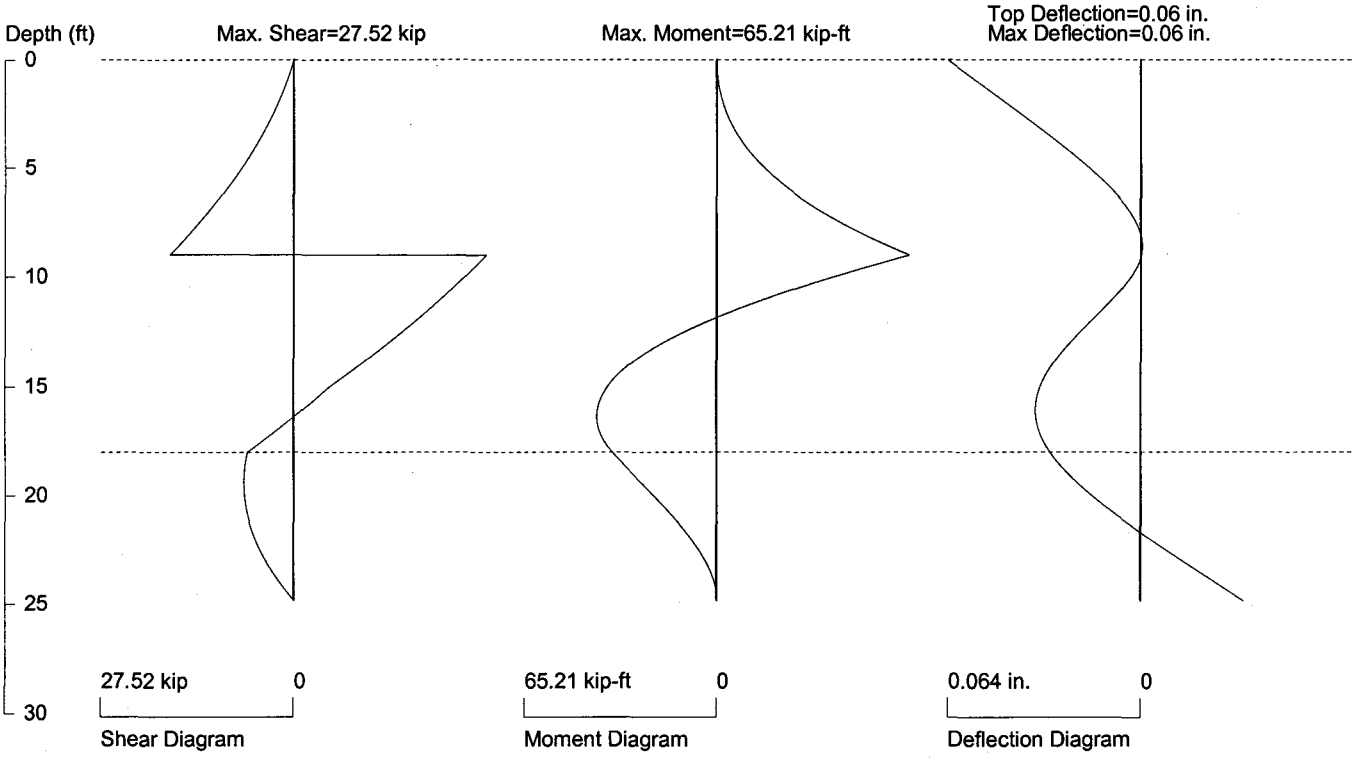

PRESSURE, SHEAR, MOMENT, AND DEFLECTION DIAGRAMS

Based on one soldier pile or one foot spacing of sheet pile

Pile Properties: E (ksi) = 29000, I (in4) = 904

Date: 12/28/2007 File Name: G:\32608\100%Design\ct-Shoring\ElmStreet\2007-1203-Run6_Cell_Q.sho

Licensed to

DESIGN RUN 7

Run 7 Cell HH1, E

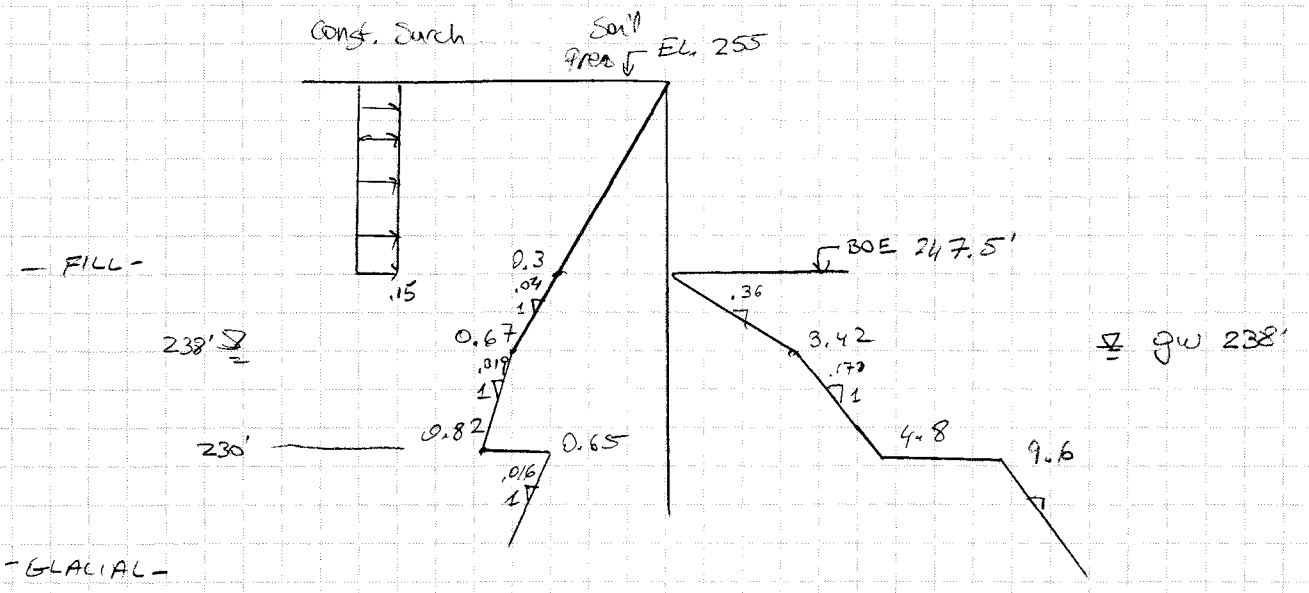

Fill: $\gamma = 120$ pcf
$K_a = 0.33$
$K_p = 3.0$

Glacial: $\gamma = 125$ pcf
$K_a = 0.26$
$K_p = 6$

Pressure calculations:

Fill: $P = 7.5' \times 120 \times 0.33 = .3$ ksf @ 247.5'

@ 238 $P = (255-238) \times 120 \times 0.33 = 0.67$ ksf

@ 230 $P = 0.67 + 8 \times (120-62.4) \times 0.33 = 0.82$ ksf

$P_{glacial} = [(255-238) \times 120 + 8(120-62.4)]\, 0.26 = 0.65$ ksf

Passive Pressure:

Fill $(247.5-238) \times 120 \times 3 = 3.42$ ksf

@ 230 $P = 3.42 + 8(120-62.4) \times 3 = 4.8$

Glacial $P_G = [(247.5-238) \cdot 120 + 8 \times (120-62.4)]\, 6 = 9.6$

17 of 58

GE Fletcher - Run 7, Cells HH1, E

32608-003

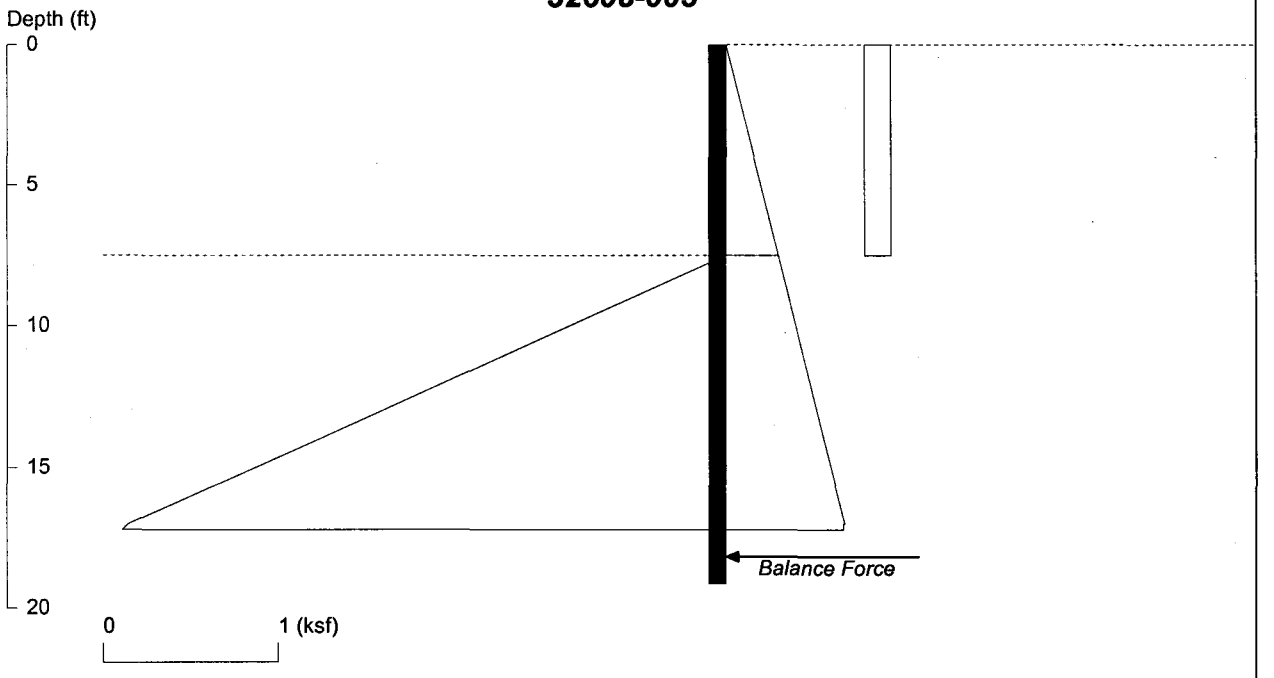

<ct-Shoring> CIVILTECH SOFTWARE USA www.civiltech.com

Licensed to

Date: 12/18/2007 File Name: G:\32608\100%Design\ct-Shoring\ElmStreet\2007-1203-Run7.sho

WALL HEIGHT: 7.50 MIN. EMBEDMENT: 11.65 MIN. PILE LENGTH: 19.15
MAX. MOMENT: 73.50 AT DEPTH: 12.45

DRIVING PRESSURE (ACTIVE, WATER, & SURCHARGE) X -- Depth from wall top

No.	X top	Top Pres.	X bot.	Bot. Pres.	Spacing
1	0.00	0.00	7.50	0.30	5.00
2	0.00	0.15	7.50	0.15	5.00

ACTIVE PRESSURE (BELOW DREDGE LINE) Y - Depth from dredge level

No.	Y top	Top Pres.	Pres. Slope	Width
1	0.00	0.30	0.04	1.00
2	9.50	0.67	0.02	1.00

PASSIVE PRESSURE (BELOW DREDGE LINE) Y -- Depth from dredge level
In the calculation, the following passive pressure are divided by a Factor of Safety =1

No.	Y top	Top Pres.	Pres. Slope	Width
1	0.00	0.00	0.36	3.00
2	9.50	3.42	0.17	3.00

UNITS: Length/Depth - ft, Force - kip, Moment - kip-ft, Pressure - ksf, Pres. Slope - kip/ft3, Deflection - in

GE Fletcher - Run 7, Cells HH1, E

48 of 58

32608-003

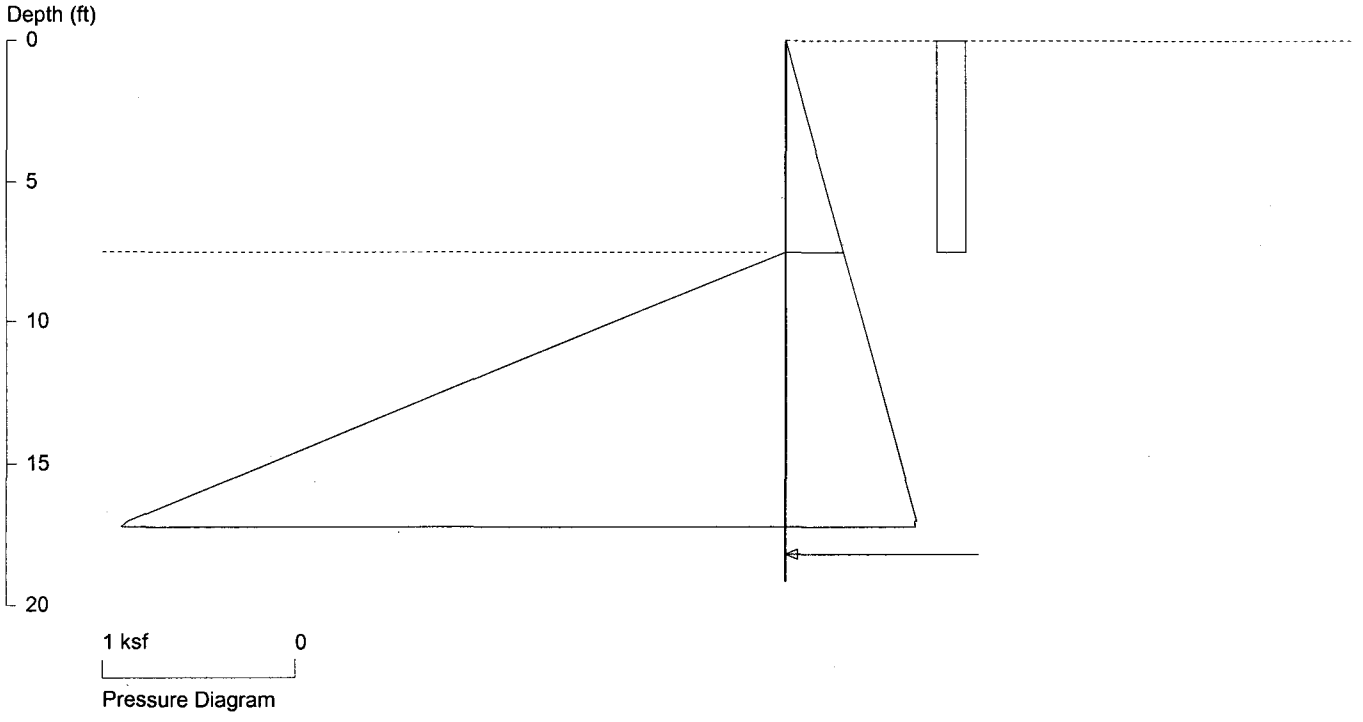

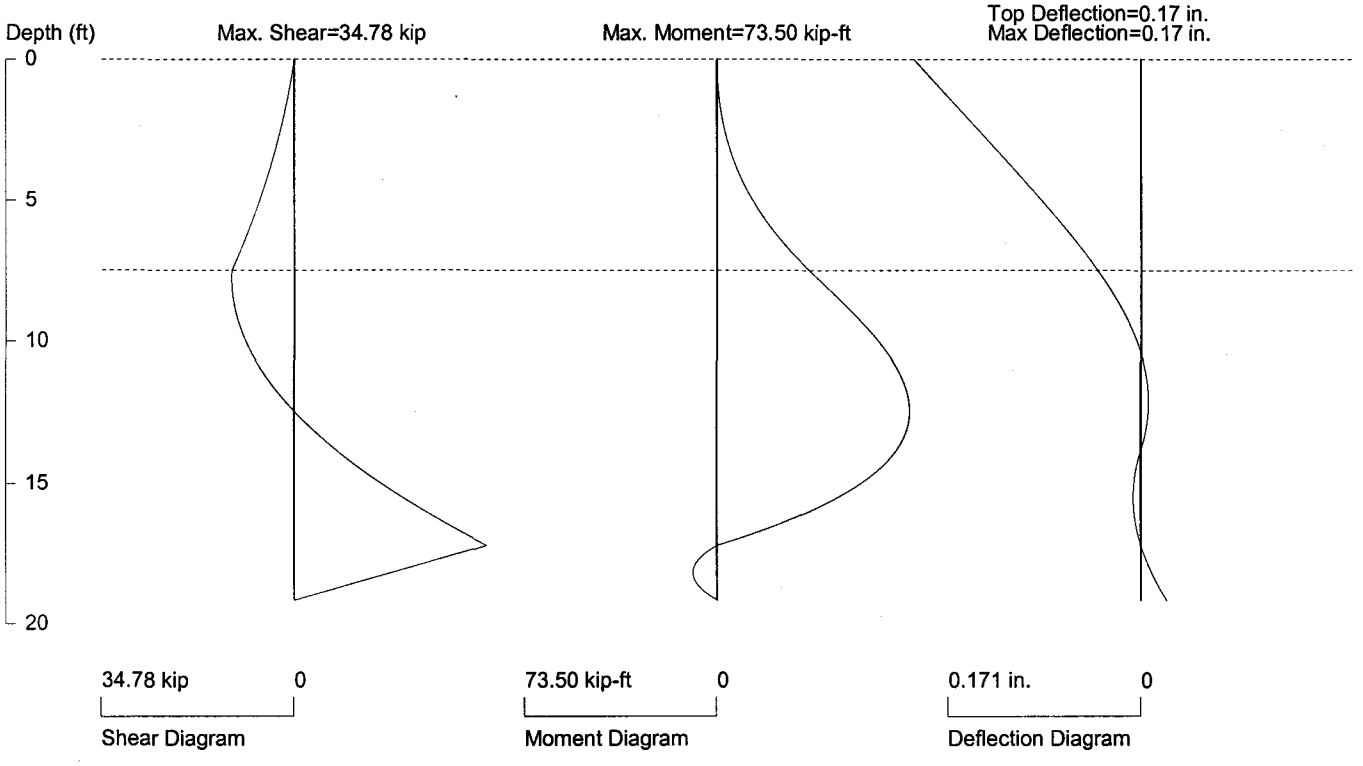

PRESSURE, SHEAR, MOMENT, AND DEFLECTION DIAGRAMS

Based on one soldier pile or one foot spacing of sheet pile

Pile Properties: E (ksi) = 29000, I (in4) = 904

Date: 12/18/2007 File Name: G:\32608\100%Design\ct-Shoring\ElmStreet\2007-1203-Run7.sho

Licensed to

APPENDIX B

Cell 2 Internal Bracing Design:

Based on CT shoring runs, the uniform load of the internal wale for cell 2 is w = 8 K/LF

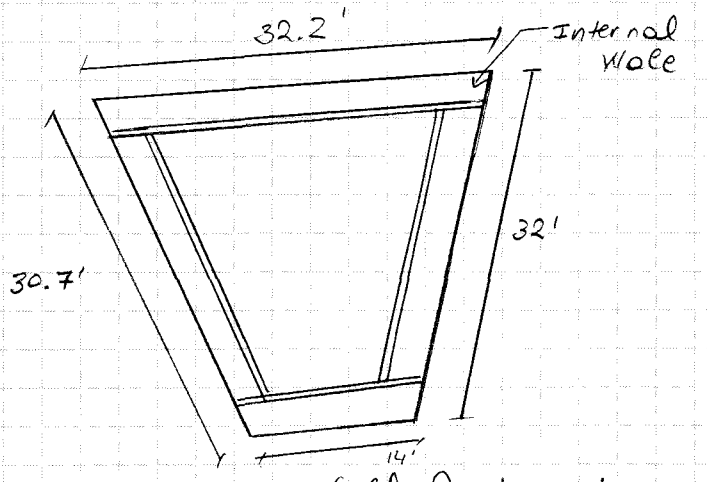

Cell 2 Layout
Not to scale

Design Internal Wale:

Maximum Moment on wale:

$$M_{max} = \frac{w l^2}{8} = \frac{8 \times 30^2}{8} = 900 \text{ kip}\cdot\text{ft}$$

Maximum Axial force on wale:

$$P_{max} = \frac{w l}{2} = \frac{8 \times 30}{2} = 120 \text{ kips}$$

⇒ See Excel spreadsheet

Use W 24 x 207

Cell V Internal Bracing Design

From CT-shoring, uniform load in cell V $w = 8$ k/LF

Strut design:

Maximum strut length is 42'-3", for cross strut 4.
Maximum tributary length of the strut is 16'.

Maximum axial force in strut:

$$P = \frac{wl}{\cos\alpha} \qquad w = 8\text{ k/LF}, \quad L = 16', \quad \alpha = 28^\circ$$

$$P = \frac{8 \times 16}{\cos 28} = 145 \text{ kips}$$

Wale Design:

Maximum unbraced length for the wale in cell V is 18'-7", assume 19'.

The maximum applied moment is

$$M = \frac{wl^2}{8} = \frac{8 \times 19^2}{8} = 361 \text{ kip}\cdot\text{ft}$$

Axial Force $P = w \cdot l$ $\quad w = 8^k/LF$

$= 8 \times 16 = 128^k$ $\quad l = 16'$ Tributary length of strut

Struts
Design

Strut (#)	K	Fy (ksi)	Ey (ksi)	Cc	Member	Angle	ω = Tributary Length	8 F (k)	kif V (k)	M (k-ft)	Lu (ft)	Lbs (ft)	Shape	3 Weight (lb)	4 Depth (in)	5 bf (in)	6 tw (in)	7 tf (in)	8 k (in)	9 k1 (in)	10 Area (in^2)	11 J (in^4)	12 Iy (in^4)	13 Ix (in^4)	14 Sy (in^3)	15 Sx (in^3)	16 ry (in)	17 rx (in)	18 rT (in)	19 L_c (ft) Gr. 50	fa (ksi)	fbx (ksi)	My (k-ft)	fby (ksi)	Lx (ft)
Soil Removal Cell V	1	46	29000	111.6	25-ft	33	17	374.6	0	0.00	25	25	**18x1/2**	93.45	18	0	0.5	0.5	0	0	27.48894	0	1053	1053	117	117	6.18921	6.18921	0	0	13.63	0.00	7.30	0.75	25
Soil Removal Cell V	1	46	29000	111.6	42-ft	28	16	181.2	0	0.00	42	42	**18x1/2**	93.45	18	0	0.5	0.5	0	0	27.48894	0	1053	1053	117	117	6.18921	6.18921	0	0	6.6	0.00	20.61	2.11	42

Wale
Design

Cell	K	Fy (ksi)	Ey (ksi)	Cc	Member	Angle	ω = Tributary Length	8 F (k)	kif V (k)	M (k-ft)	Lu (ft)	Lbs (ft)	Shape	3 Weight (lb)	4 Depth (in)	5 bf (in)	6 tw (in)	7 tf (in)	8 k (in)	9 k1 (in)	10 Area (in^2)	11 J (in^4)	12 Iy (in^4)	13 Ix (in^4)	14 Sy (in^3)	15 Sx (in^3)	16 ry (in)	17 rx (in)	18 rT (in)	19 L_c (ft) Gr. 50	fa (ksi)	fbx (ksi)	My (k-ft)	fby (ksi)	Lx (ft)
Soil Removal Cell Q	1	50	29000	107.0	Internal Wale	0	0	120.0	120	900	30	16	**W24x207**	207	25.71	13.01	0.87	1.57	2.375	1	60.7	38.6	578	6820	88.8	531	3.08	10.6	3.48	11.65265	1.98	20.34	6.62	0.90	30
Soil Removal Cell V	1	50	29000	107.0	Internal Wale	0	0	128.0	76	361	19	10	**W24x146**	146	24.74	12.9	0.65	1.09	1.875	1.0625	43	13.4	391	4580	60.5	371	3.01	10.3	3.43	11.55412	2.98	11.68	1.83	0.36	19

Member	Ly (ft)	K*Lx/rx	K*Ly/ry	Max K*L/r	Slender Column	Fa (ksi)	OK Axial Stress	Lc (ft)	Pipe or W flange	Compact ?	Is Lc>Ly	Overstress?	Is fa/Fa<15%?	F'ex (ksi)	F'ey (ksi)	Fbx (ksi), W-flange	Fbx (ksi), Pipe	Fbx (ksi)	Fby (ksi)	fa/Fa	fbx/Fbx	fby/Fby	Combined Stresses	Combined Stress OK?	fv (ksi)	h (in)	h/tw	Fv (ksi)	Shear OK?
25-ft	25	48.5	48.5	48.5	NO	22.90	**YES**	100000.0	Pipe	YES	YES	0%	NO	63.56	63.56	0.00	30.36	30.36	30.36	0.60	0	0.03	0.63	**YES**	0.00	18.000	36.0	18.40	**YES**
42-ft	42	81.4	81.4	81.4	NO	17.84	**YES**	100000.0	Pipe	YES	YES	100%	NO	22.52	22.52	0.00	60.72	60.72	60.72	0.38	0	0.04	0.43	**YES**	0.00	18.000	36.0	18.40	**YES**

Member	Ly (ft)	K*Lx/rx	K*Ly/ry	Max K*L/r	Slender Column	Fa (ksi)	OK Axial Stress	Lc (ft)			Is Lc>Ly	Overstress?	Is fa/Fa<15%?	F'ex (ksi)	F'ey (ksi)	Fbx (ksi), W-flange	Fbx (ksi), Pipe	Fbx (ksi)	Fby (ksi)	fa/Fa	fbx/Fbx	fby/Fby	Combined Stresses	Combined Stress OK?	fv (ksi)	h (in)	h/tw	Fv (ksi)	Shear OK?
Internal Wale	16	34.0	62.3	62.3	NO	22.31	**YES**	11.7			NO	20%	YES	129.47	38.43	31.78	check	31.78	45.00	0.09	0.65	0.02	0.76	**YES**	5.36	20.960	24.1	20.00	**YES**
Internal Wale	10	22.1	39.9	39.9	NO	25.85	**YES**	11.6			YES	20%	YES	304.76	93.96	39.60	check	39.60	45.00	0.12	0.3	0.01	0.43	**YES**	4.73	20.990	32.3	20.00	**YES**

APPENDIX C

HALEY & ALDRICH

Calculations

File No.	32608-003		
Sheet	55 of 58		
Client		Date	12/31/07
Project		Computed By	BV
Subject	ELM street Detail	Checked By	DRS

- The uniform load for Elm street is $w = 8$ k/ft same as the uniform load for Mill street. Since the uniform loads and pipe sizes are the same, the detail design for Mill street is applicable to Elm street.

Please see Connection Detail and Beam seat detail for Mill street.

APPENDIX D

Soil profiles:

Based on the attached borings and cross sections there will be two (2) soil profiles to be used for analysis

Profile 1 West half of the site:

GS

-FILL-

230

-GLACIAL-

204

-ROCK-

Profile 2 East half of the site

GS

-FILL-

235

-GLACIAL-

225

-ROCK-

Soil Properties:

Fill: $\gamma = 120$ pcf
$k_a = 0.33$
$k_p = 3.0$

Glacial $\gamma = 125$ pcf
$k_a = 0.26$
$k_p = 5.0$

See Appendix D for Mill for soil properties

HALEY & ALDRICH	CALCULATIONS	File No. 32609-003
		Sheet 58 of 58
Client: ARCADIS		Date: 12/15/03
Project: GE FLETCHER (UCM ST)		Computed By: BV
Subject: SOIL PROFILES		Checked By: DRS

Boring	LOC	GS EL.	TOP GLACIAL	TOP ROCK
EB-18B	SW	258	232	202 (SHORT REFUSAL)
EB-17	C-E	259	NE	220 ← COULD BE BOULDER TOP OF GLACIAL
MW-26B	N-C	256.5	236	NE
MW-29B	C	258.5	238.5	NE
MW-2AR	NE	258.6	228.5	228.5 (ALMOST REFUSAL)
EB-16	C-W	254	226.5	204 (W/CORE)

↳ Boring information from 30% Design Report by Arcadis BBL.

SOIL PROFILE (1) WEST

GS

-FILL-

230

-GLACIAL-

204

-ROCK-

SOIL PROFILE (2) EAST

GS

-FILL-

235

-GLACIAL-

225

-ROCK-

Elm. St

Arthur D Little

Soil Boring Log

GS C 259

Boring No.	EB-17
Client	EPA Region-I
Project	Fletcher Paint
Case No.	62360-03

Date Start 11/4/91	Contractor CON-TECH
Date Complete 11/5/91	Drill Method HOLLOW STEM AUGER
Hole Diameter ~~o.d. 4¼"~~ 8"	Type Of Rig DIETRICH D-50
Casing Size i.d. 4¼" o.d. 8"	Drilling Additives —
Boring Depth 39.5'	Geologist C. PIABOLO / B. NAUGHTON
Sampling Method split spoon 2", 3" ϕ at various depths	

LOCATION

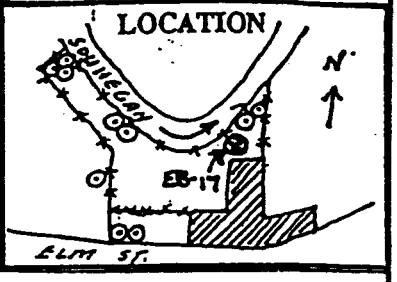

Scale in Feet	SAMPLE Type and number	Interval	Recovery	Blows Per 6"	Total Organics (ppm)	GEOLOGIC DESCRIPTION Unified Soil Class ID, color (Munsell System), grain size, sorting, moisture, compaction, indication of contaminants (unusual odor or sheen), and general stratigraphic description
0.0						
1.0	032	0'-2'	16" (2"ϕ)	ASTM 140 lb. 2 5 25 21	H.S.: 2.6 ppm	[SW] well graded sands, gravelly sands. 10YR 5/4 moderate yellowish brown, approximately 1" of gravel w/ bluish green coloration. Also some asphalt looking material. Fine to medium grained sands w/ pebbles. Poorly sorted loosely compacted. Not moist.
2.0						
3.0						
4.0						
5.0	034	4.5'-6.5'	15½" (2"ϕ)	8 16 12 13	H.S.: 20 ppm	[SW] well graded sands, gravelly sands. 10YR 5/4 moderate yellowish brown. Bottom 3" of 10YR 2/2 Dusky yellowish brown. Fine to medium grained sands w/ pebbles. Loosely compacted. Poorly sorted. Not moist.
6.0						
7.0						auger encountered gravel
8.0						
9.0						
10.0						
11.0	036	10'-12'	8" (3"ϕ)	2 3 5 7	H.S.: 2.5 ppm	[SW] well graded sands, lesser amounts of gravel than previously encountered. 10YR 3/2 Dusky brown yellowish brown. Fine grained sands w/ pebbles. Loosely compacted. Poorly sorted, but better than previously. not moist
12.0						
13.0						

Arthur D Little

Soil Boring Log
Continuation Page

Boring No. EB-17
Client EPA Region 1
Project Fletcher Paint
Case No. 62360-03

Scale in Feet	SAMPLE Type and number	Interval	Recovery	Blows Per 6"	Total Organics (ppm)	GEOLOGIC DESCRIPTION Unified Soil Class ID, color (Munsell System), grain size, sorting, moisture, compaction, indication of contaminants (unusual odor or sheen), and general stratigraphic description
13.0						
14.0						
15.0	geo. 039	15'-17'	2.5"	13 43 16 4 (2"ϕ)	0.0 ppm H.S. = 21 ppm	[SW] well graded sands - fine grained SANDS Dark. yellowish brown (10YR 4/2) medium to very compact. moist.
16.0						
17.0						
18.0						
19.0						
20.	geo 085	20'-22'	3"	14 19 18 17 (3"ϕ)	385.0 ppm H.S. = 1579. ppm	[GW] well graded, gravelsy SANDS w/ Chunks of gravel, gray staining, asphalt, wood chunks. Dark yellowish brown 10YR 4/2. oily appearance. Compact moist.
21.						
22.						
23.						
24.						
25.						
26.	/	25'-27' 6"Ø	0"	3 5 17 23 (3"ϕ)	278 ppm	No Recovery. PID reading was taken on residual soils on the exterior of spoon.
27.						
28.	geo 040 cup	27'-29'	11"	15 15 13 13 (3"ϕ)	14.8 ppm H.S. = 1151.0 ppm	(SM) Silty SANDS, SAND-SILT MIXTURE Fine grained. 10YR 2/2 Dusky yellowish brown. Some soils w/ organics, HAIR like strands black/light colored. Sheen on soils. moder. sorted. med. compact. SATURATED.
29.						

Elm. St

Arthur D Little

Soil Boring Log
Continuation Page

Boring No. EB-17
Client EPA Region 1
Project Fletcher Paint
Case No. 62360-03

Scale in Feet	SAMPLE Type and number	Interval	Recovery	Blows Per 6"	Total Organics (ppm)	GEOLOGIC DESCRIPTION Unified Soil Class ID, color (Munsell System), grain size, sorting, moisture, compaction, indication of contaminants (unusual odor or sheen), and general stratigraphic description
29.						
30.	geo 041	30'-32'	24"	1 1 7 5	5.5 ppm HS = 75.0 ppm	[SM] silty SANDS, fine grained SANDS well-graded some gravel 10YR 2/2 Dusky yellowish brown. Bottom 8" of spoon 10YR 6/6 Dark yellowish orange, coarser grained SANDS. wood chunk, sheen, hair-like strands. loose-med compact, saturated.
31.						
32.						
33.						FILL
34.	geo 043	34'-36'	24"	33 38 42 39	7.5 HS = 145.0 ppm	[SM] silty sands, fine grained sands top 13" Dusky yellowish brown 10YR 2/2. Bottom 11" Crushed rock, appears granite w/ moderate yellowish brown sands, coarser grained. sheen, brown glass, hair-like strands. SATURATED very compact auger refusal at 34.
35.	043 DUP					
36.						
37.						roller bitting began at 37'. Encountered hardness at 37.3'
38.						
39.						
40.						End of boring at 39.5'
41.						
42.						
43.						
44						
45						

Date Start/Finish: 12/23/03 **Drilling Company:** GeoSearch **Driller's Name:** Joe Keenan **Drilling Method:** Hollow Stem Auger **Bit Size:** NA **Auger Size:** 4.25" ID **Rig Type:** CME-75 Truck-Mounted Rig **Sampling Method:** 2" OD x 2' Split Spoon **Core Size:** NA **Casing Size:** NA	**Northing:** 122386.8 **Easting:** 987464.4 **Casing Elevation:** 259.5' **Borehole Depth:** 29' below grade **Surface Elevation:** 256.5' **Geologist:** Ron Kuhn	**Well/Boring ID:** MW-26B **Client:** General Electric Company **Location:** Fletcher's Paint Works and Storage Facility Superfund Site Milford, New Hampshire

DEPTH	ELEVATION	Sample / Run Number	Sample/Int/Type	Recovery (feet)	Blows per 6 Inches/ Minutes per Foot	N - Value / RQD (%)	FID Headspace (ppm)	Geologic Column	Stratigraphic Description	Well/Boring Construction
										4" Steel Protective Casing with Locking Cap
0									Cap approximately 1' thick.	Concrete Pad (0 - 1.0' bgs)
	255								Orange-brown fine to coarse SAND, trace fine to medium Gravel, trace Concrete, trace Silt, damp. [FILL]	
									Orange-brown to gray-brown fine SAND and SILT, damp. [FILL]	
5									Dark brown fine SAND and SILT, little medium to coarse Sand, trace fine Gravel, trace black Slag, damp. [FILL]	
	250								Orange-brown fine to medium SAND, trace coarse Sand, coarse Gravel in tip of shoe limited recovery. [FILL]	2" ID Sch. 40 PVC Riser (3.0' ags - 18.85' bgs)
10									Orange-brown fine to medium SAND, little coarse Sand, trace fine to medium Gravel, trace black Slag/Glass, damp. [FILL]	Type I/II Portland/5% Bentonite Cement Grout (0 - 15' bgs)
	245								Orange-brown fine to medium SAND, little coarse Sand, trace fine to medium Gravel, trace Silt, trace to little Slag, Coal, Brick, and Glass, damp. [FILL]	
15	241.5								-GLACIAL-	3/8" Hydrated Bentonite Chip Seal (15' - 17' bgs)

BBL
BLASLAND, BOUCK & LEE, INC.
engineers & scientists

Remarks: bgs = below ground surface; NA = Not Applicable/Available.

Geologic information from MW-26A sampling. See boring log MW-26A for additional information.

Client:
General Electric Company

Site Location:
Fletcher's Paint Works and Storage Facility Superfund Site
Milford, New Hampshire

Well/Boring ID: MW-26B

Borehole Depth: 29' below grade

DEPTH	ELEVATION	Sample Run Number	Sample Int/Type	Recovery (feet)	Blows/6 inches/ Minutes per Foot	N - Value / RQD (%)	FID Headspace (ppm)	Geologic Column	Stratigraphic Description	Well/Boring Construction
	240								No Recovery. Drill through Cobble.	3/8" Hydrated Bentonite Chip Seal (15' - 17' bgs)
									Dark gray-brown fine SAND and SILT, trace highly degraded Natural Organics, moist. (Native) — FILL —	2" ID Sch. 40 PVC Riser (3.0' ags - 18.85' bgs)
20		236								
									Light gray fine to medium SAND, saturated, odor.	
	235								Light gray-brown fine to medium SAND, little coarse Sand, trace fine Gravel, odor, saturated. — GLACIAL —	Grade #0 Morie Sand Pack (17' - 29' bgs)
									Fine Sand and Silt, odor, saturated from 22.8' - 23.1' bgs.	
25									Gray-brown fine to medium SAND, little coarse Sand, trace Gravel, saturated.	2" ID Sch. 40 PVC 0.010" Slot Screen (18.85' - 28.65' bgs)
	230								Gray-brown fine to medium SAND with natural Organic interbedding (Organics consist of Roots/Vegetation), saturated.	2" ID Sch. PVC Unslotted portion of Screen and Sump (28.85' - 29' bgs)
30										
	225									
35										

BBL
BLASLAND, BOUCK & LEE, INC.
engineers & scientists

Remarks: bgs = below ground surface; NA = Not Applicable/Available.

Geologic information from MW-26A sampling. See boring log MW-26A for additional information.

Date Start/Finish: 2/2/04 **Drilling Company:** GeoSearch **Driller's Name:** Joe Keenan **Drilling Method:** Hollow Stem Auger **Bit Size:** NA **Auger Size:** 4.25" ID **Rig Type:** Diedrich D-120 Truck-Mounted Rig **Sampling Method:** 2" OD x 2' **Core Size:** NA **Casing Size:** NA	**Northing:** 122338.4 **Easting:** 987449.1 **Casing Elevation:** 261.49' **Borehole Depth:** 31' below grade **Surface Elevation:** 258.5' **Geologist:** Ron Kuhn	**Well/Boring ID:** MW-29B/ESSB-014 **Client:** General Electric Company **Location:** Fletcher's Paint Works and Storage Facility Superfund Site Milford, New Hampshire

DEPTH	ELEVATION	Sample / Run Number	Sample/in/Type	Recovery (feet)	Blows per 6 Inches/ Minutes per Foot	N - Value / RQD (%)	FID Headspace (ppm)	Geologic Column	Stratigraphic Description
	260								
0		0	CAP	NA	NA	NA	NA		Cap approximately 2' thick.
		1	0-1	0.4	56 63	63	1.54		Gray-brown fine SAND and SILT, trace medium to coarse Sand, trace Brick and Wood, trace fine to medium Gravel, damp. [FILL]
	255	2	1-3	0.6	10 14 5 3	19	1.58		Gray-brown fine SAND, little Silt, trace medium to coarse Sand, trace fine to medium Gravel, damp. [FILL]
5		3	3-5	0.9	2 3 4 2	7	1.99		
	250	4	5-7	0.4	4 4 2 2	6	NA		Gray-brown fine SAND and black SLAG, Coal, light gray Cinders, trace medium to coarse Sand, loose, damp. [FILL] Trace Glass below 9.0' below cap.
10		5	7-9	0.5	2 3 3 2	6	2.48		
		6	9-11	0.2	2 2 2 5	4	NA		Trace Brick below 11.0' below cap.
	245	7	11-13	0.6	4 5 8 14	13	1.38		Gray-brown fine SAND, little Silt, trace Granite fragments, damp.
15		8	13-15	0.0	8 10	33	NA		No Recovery.

Well/Boring Construction

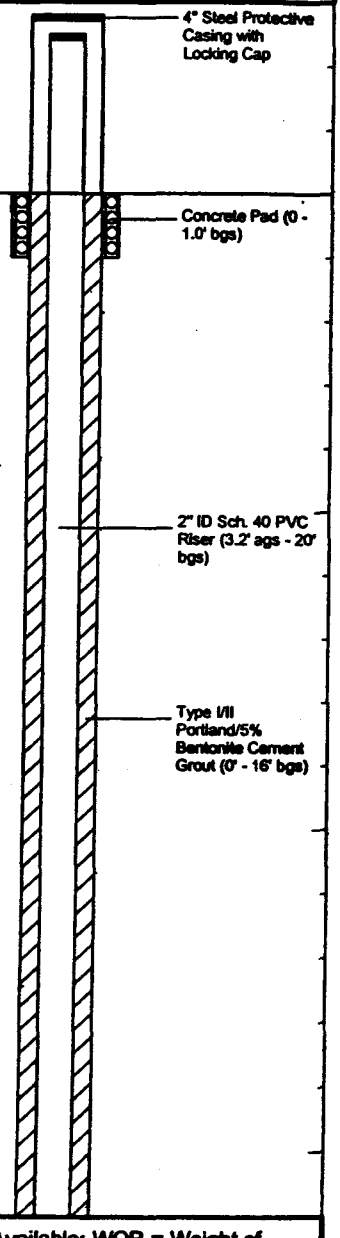

BBL
BLASLAND, BOUCK & LEE, INC.
engineers & scientists

Remarks: bgs = below ground surface; NA = Not Applicable/Available; WOR = Weight of Rod.
2'-thick Cap present at this location. All sample intervals are below cap.

Client:
General Electric Company

Site Location:
Fletcher's Paint Works and
Storage Facility Superfund Site
Milford, New Hampshire

Well/Boring ID: MW-29B/ESSB-014

Borehole Depth: 31' below grade

DEPTH	ELEVATION	Sample Run/ Number	Sample/Int/Type	Recovery (feet)	Blows per 6 inches/ Minutes per Foot	N-Value / RQD (%)	FID Headspace (ppm)	Geologic Column	Stratigraphic Description
		8	13-15	0.0	23 4	33	NA		No Recovery.
		9	15-17	0.3	5 120/5"	Ref	NA		Gray-brown fine SAND, trace medium to coarse Sand, trace Silt, wet.
	240								Gray-brown fine SAND, trace medium to coarse Sand, trace Silt, wet.
					5 7				Dark brown moderately to highly degraded WOOD, moist.
20		10	17-19	1.0	7 9	14	4.91		Light gray-brown fine to medium SAND, trace Silt, saturated.
		11	19-21	0.6	7 7 5 4	12	7.00		
	235	12	21-23	1.3	6 6 7 7	13	5.32		Light brown fine to medium SAND, trace to little coarse Sand, saturated.
25		13	23-25	1.5	8 7 5 10	12	0.74		Trace Silt, minor Natural Organic bedding below 25' below cap.
	230	14	25-27	1.2	7 8 11 10	19	4.25		Gray-brown fine SAND, trace medium to coarse Sand, trace Silt, minor Natural Organic laminations/Bedding, saturated.
30		15	27-29	1.3	2 3 3 5	6	2.38		
	225								
35									

Well/Boring Construction

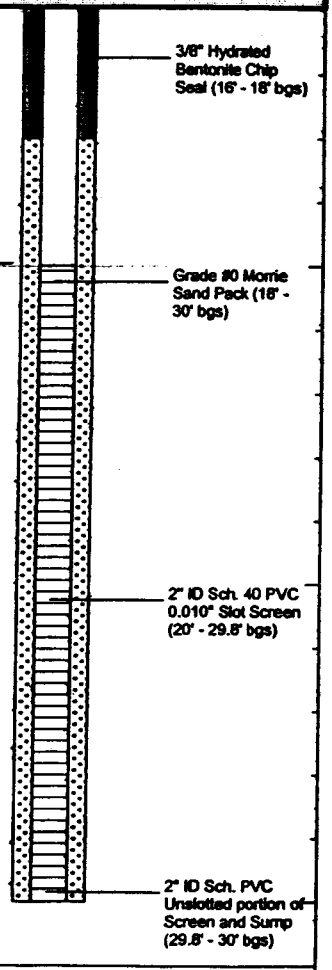

Remarks: bgs = below ground surface; NA = Not Applicable/Available; WOR = Weight of Rod.
2'-thick Cap present at this location. All sample intervals are below cap.

BBL
BLASLAND, BOUCK & LEE, INC.
engineers & scientists

Arthur D Little

Soil Boring Log
Continuation Page

Boring No. EB-16
Client EPA-Region 1
Project Fletcher Paint
Case No. 62360-03

Scale in Feet	SAMPLE Type and number	Interval	Recovery	Blows Per 6"	Total Organics (ppm)	GEOLOGIC DESCRIPTION Unified Soil Class ID, color (Munsell System), grain size, sorting, moisture, compaction, indication of contaminants (unusual odor or sheen), and general stratigraphic description
44.						
45.	GEOL. FDW (141)	45-47	18"	33 30 36 73	– H-S=	0-18", SW, 5Y6/4, well graded fine to coarse sands w/ granitic boulder fragments throughout. wet. compact. w/ trace silt.
46.						
47.						
48.		GLACIAL			TOP	OF ROCK
						TOP of ROCK AT 48.4' – ROLLER BIT
						TOP OF CUT AT 48.8'
49.	RUN #1 RPM≅275			5½ min		Coarse grained granite from 48.8'– with feldspars, pegmatites and quartz. From 49.8'–50.0' gneiss interval. Crumbly rock begins at 51.1'–.3 (≅ .5' recovery loss estimate here) with silts + clays on surfaces. From 51.8 – 52.8. another interval of gneiss. Then back to coarse granite → 53.2' Approx. .5' recovery loss at bottom.
50.				10¼ min		
51.		–ROCK–		11¼ min		
52.				6½ min		
53.				9½ min		Apparent water bearing fractures are at 51.5 – 51.8, 52.3, 52.9, 53.0, 53.2'
54.	RUN #2 RPM≅400			6 min		From 53.8'– 54.05', continuation of coarse granite. Remainder is finer grained, more crystalline gneiss, evident foliations, w/ some fractures occurring along the foliations.
55.				5¼ min		
56.				9¼ min		
57.				9½ min		Apparent water bearing fractures are at: 53.8', 53.9', 54.05', 54.2', 54.3, 57.0, 57.3–.4, 57.6, 57.7, 58.6, 58.7, 58.8
58.				8¾ min		
59.						END OF BORING AT 58.8'
60.						NOTE: - - - represents mechanical fractures; ——— represents natural fractures; ——— represents water bearing natural fractures

Elm St

Arthur D Little

Soil Boring Log
Continuation Page

Boring No. EB-16
Client EDA-REGION 1
Project FLETCHER PAINT
Case No. 62360-03

Scale in Feet	SAMPLE Type and number	Interval	Recovery	Blows Per 6"	Total Organics (ppm)	GEOLOGIC DESCRIPTION Unified Soil Class ID, color (Munsell System), grain size, sorting, moisture, compaction, indication of contaminants (unusual odor or sheen), and general stratigraphic description
-28						
-29						
-30	GEOL. FPW (124)	30-32'	24"	17 19 33 76	10 HS=5	3"-5", 10YR 4/2, SW, Fine to medium well graded sands. wet. loose. 5"-24'- 10YR4/2, SW, Fine to coarse well graded sands. wet. loose.
-31						
-32						
-33						
-34						
-35	GEOL FPW (125)	35-37'	24"	6 9 14 10	4 HS=5.7	0-20", 10YR6/2, SP, poorly graded fine to medium grained sand. wet. moderate compaction. 20"-24", 10YR5/6, SP, poorly graded fine to medium grained sands. wet. moderate compaction.
-36						
-37						
-38	GEOL. FPW, CLP (126)	38-39.5'	24"	13 25 33	10 HS=8.1	0-24", ML, 10YR 6/2, very fine silty sand. wet. moderate compaction
-39						
-40						
-41	GEOL. FPW (127)	40-42'	20"	12 13 17 24	3 HS=8	* RUNNING SANDS. 0-16", ML, 10YR 6/2, very fine silty sand. wet. moderate compaction 16"-20" SW, 10YR6/2, Fine to medium well graded sands. wet. loose.
-42						
-43						
-44						

Arthur D Little

Soil Boring Log
Continuation Page

Boring No. EB-16
Client EPA-REGION 1
Project Fletcher Paint
Case No. 62360-03

Scale in Feet	SAMPLE Type and number	Interval	Recovery	Blows Per 6"	Total Organics (ppm)	GEOLOGIC DESCRIPTION Unified Soil Class ID, color (Munsell System), grain size, sorting, moisture, compaction, indication of contaminants (unusual odor or sheen), and general stratigraphic description
12 13 14	GEOL FPW (114)	12-14'	14"	8 8 7 5	10 (SPOON) HS 6.2 (A) HS 5.7 (B)	0-2", 10YR 4/2, SW, Fine to coarse well graded sands. w/ charred material intermixed. 2"-7", 5YR 2/2, SM, silty fine grained sand w/ pieces of glass and some coarse gravel. 7"-8", white ash type mtl. 8-12", 5YR 2/2, SW, F-C well graded sands. 12-14", 5YR 2/2, SM, silty fine grained sands.
15 16	GEOL FPW (115)	14-16'	3"	4 10 5 6	2 (SPOON) HS 4.5 (A) HS 6.4 (B)	0-3", 5YR 2/2, SW, Fine to coarse well graded sands w/ ash type and black charred material intermixed throughout.
17 18	GEOL FPW (116)	16-18'	20"	14 5 7 9	2 (SPOON) HS 5.5 (A) HS 5.3 (B)	0-13", 5YR 2/2 intermixed w/ 5YR 5/6, SM, silty fine sand w/ silt decreasing with depth & well defined charred layer 1/4" thick at 6.5". 13"-17", 10YR 6/2, SW, Fine to med. well graded sands 17"-20", 10YR 4/2, SM, silty fine sand. wet.
19 20	GEOL FPW (119)	18-20'	15"	2 3 4 4	0 HS = 3.9	0-5", 10YR 4/2, SM, silty fine sand. wet. 5"-15", 10YR 6/2 to 10YR 5/4, SW, well graded fine to coarse sands. wet. loose.
21 22	FPW, CLP (120)	20-21.5'	14"	5 9 11	0	0-14", 10YR 5/4, SW, Fine to coarse well graded sands. wet. loose. * NO GEOLOGICAL SAMPLE TAKEN.
23 24	GEOL FPW (121)	22-24'	15"	2 3 8 9	10 HS = 9.1	0-15", 10YR 4/2, SW, Fine to coarse well graded sands. wet. loose.
25 26 27.5	GEOL FPW (122) (A1)	24-26'	20" EL.	8 19 18 26	12 HS 4.1	0-12", 10YR 4/2, SW, Fine to coarse well graded sands. wet. loose. 12"-13", wood chips. 13"-20", 10YR 4/2, SW, F-M well graded sands. wet.
27 28						

FILL

GLACIAL

Elm. St

Arthur D Little

Soil Boring Log

– GSC 254 4c

Boring No.	EB-16
Client	EPA-REGION 1
Project	Fletcher PAINT
Case No.	62360-03

Date Start	11-14-91	Contractor	FLORES DRILLING
Date Complete	11/20/91	Drill Method	HOLLOW STEM AUGERS
Hole Diameter	8"	Type Of Rig	CME-55
Casing Size	4"Ø HOLLOW STEM	Drilling Additives	–
Boring Depth	58.8'	Geologist	T. GOLDTHWAITE / A. PACKARD
Sampling Method	2"Ø (24" length) S.S. / 3"Ø (18" length) S.S.		

LOCATION

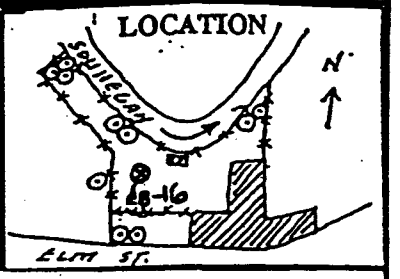

Scale in Feet	SAMPLE Type and number	Interval	Recovery		Blows Per 6"	Total Organics (ppm)		GEOLOGIC DESCRIPTION Unified Soil Class ID, color (Munsell System), grain size, sorting, moisture, compaction, indication of contaminants (unusual odor or sheen), and general stratigraphic description
-0.0	GEOL.				9	–		0-2", 5Y 5/2, SW, FINE to COARSE well graded SANDS.
-1	FPW (106)	0-2'	15"		15 9 11	HS = 7.2		2"-10", 10YR 6/2, SM, silty FINE GRAINED SAND. 10"-15", 10YR 5/4, SW, FINE to COARSE well graded SANDS w/ cobble fragments intermixed.
-2								
-3								
-4								
-5	GEOL.				3	–	–	0-2", 10YR 6/2 to 10YR 4/2, SM, silty FINE to COARSE SANDS w/ interbedded layers of darker organic material.
-6	FPW (109)	5-7'	2"	2"	2 2 3	HS 11 9.3	HS 11 3.6	* 2"Ø AND 3"Ø split-spoons used due to low recovery.
-7								
-8								
-9								
-10	GEOL.				4	–	–	NON-NATURAL SAMPLE: @4.5" – BROKEN CLEAR GLASS. 5.5"-15" – ASH TYPE MTRL. showing platey structure w/ charred MTRL @ 7" & 12" and broken clear glass intermixed. @ 14" → well def. and broken clear glass w/ pumice type compacted MTRL.
-11	FPW (110)	10-12'	20"		4 4 12	HS 11 10.4 (A)	HS 11 6.4 (B)	GEOLOGIC SAMPLE: 0-5.5", 10YR 2/2, SM, silty FINE SANDS, MODERATE COMPACTION. 15"-20", 10YR 4/2, SW, FINE to COARSE well graded SANDS, LOOSE.
-12								
-13								

Date Start/Finish: 12/18/03 **Drilling Company:** GeoSearch **Driller's Name:** D. Crawford **Drilling Method:** Hollow Stem Auger **Bit Size:** NA **Auger Size:** 4.25" ID **Rig Type:** CME-75 Truck-Mounted Rig **Sampling Method:** 2" OD x 2' Split Spoon **Core Size:** NA **Casing Size:** NA	**Northing:** 122,449.0 **Easting:** 987,561.4 **Casing Elevation:** 261.18 **Borehole Depth:** 30' below grade **Surface Elevation:** 258.6 **Geologist:** Leanne Roulier	**Well/Boring ID:** MW-2AR/ESSB-J18 **Client:** General Electric Company **Location:** Fletcher's Paint Works and Storage Facility Superfund Site Milford, New Hampshire

DEPTH	ELEVATION	Sample / Run Number	Sample/Int/Type	Recovery (feet)	Blows per 6 Inches / Minutes per Foot	N - Value / RQD (%)	FID Headspace (ppm)	Geologic Column	Stratigraphic Description
	260								
0		NA	CAP	NA	NA	NA	NA		Cap approximately 1' thick.
									Dark brown SILT.
		1	0-1	1.0	10 7	7	0.5		Gray-brown fine SAND, little medium Sand, trace blue plastic, firm, moist. [FILL]
	255	2	1-3	0.5	7 7 8 7	15	9.0		Medium brown fine to medium SAND, trace coarse Sand, loose, moist. [FILL]
5		3	3-5	0.6	8 10 10 12	20	2.5		Dark brown SILT, some fine Sand, little angular Gravel, trace coarse Sand, loose, moist. [FILL]
		4	5-7	0.4	4 3 3 2	6	11.2		Dark brown SILT, little fine Sand, trace Brick, loose, moist. [FILL]
	250	5	7-9	0.2	2 2 3 2	5	NA		Same as above, trace angular Gravel and wood, loose, moist. [FILL]
10		6	9-11	0.0	4 4 5 4	9	NA		No recovery 10-12' bgs.
	245	7	11-13	1.2	5 6 8 8	14	240 (–)		Light brown fine to medium SAND, trace coarse Sand, moderately well sorted, trace Wood, loose, moist.
15		8	13-15	0.5	3 3 4 3	7	60.2		

Well/Boring Construction

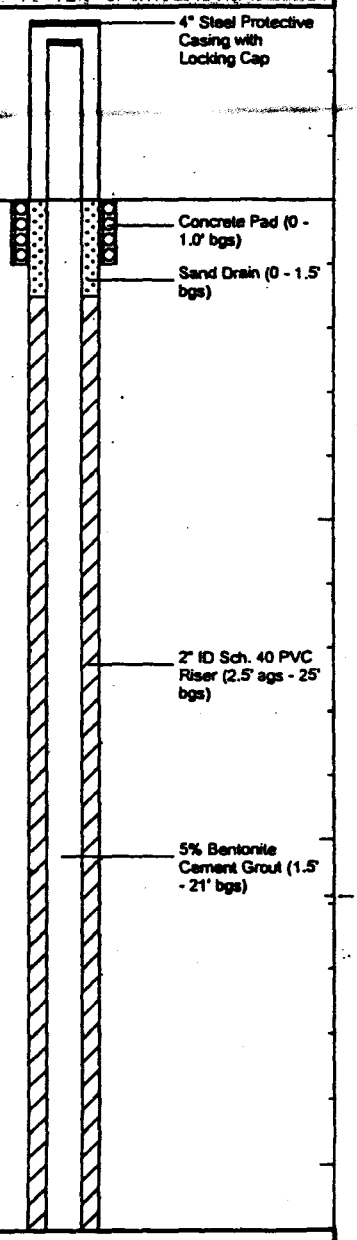

Remarks: bgs = below ground surface; NA = Not Applicable/Available; Ref = Refusal; (–) = Negative Shake Test Result.

BBL
BLASLAND, BOUCK & LEE, INC.
engineers & scientists

Client:
General Electric Company

Site Location:
Fletcher's Paint Works and Storage Facility Superfund Site
Milford, New Hampshire

Well/Boring ID: MW-2AR/ESSB-J18

Borehole Depth: 30' below grade

DEPTH	ELEVATION	Sample Run Number	Sample Int/Type	Recovery (feet)	Blows per 6 Inches/ Minutes per Foot	N - Value / RQD (%)	Flp Headspace (ppm)	Geologic Column	Stratigraphic Description
		9	15-17	1.2	2, 4, 4, 2	8	40		Light brown fine to medium SAND, trace coarse Sand and rounded fine Gravel, well sorted, loose. Alternating layers (1-2' thick) of medium brown fine to medium SAND grading to coarse SAND at 22' bgs, moderately well sorted, little iron staining.
240	234.5		17-19	1.5	4, 3, 3, 2	6	5.2		Trace coarse Sand, loose, moist at 18' bgs. -FILL-
20		11	19-21	0.1	10, 10, 13, 10	23	NA		
235		12	21-23	1.2	15, 15, 13, 11	28	4.1		
25		13	23-25	1.6	6, 8, 11, 12	19	2.0		Medium brown very fine to fine SAND grading to coarse SAND with some medium Sand, moderately well sorted, some iron staining in the coarse layers.
		14	25-27	2.0	17, 20, 27, 33	47	15.2		Light brown very fine SAND, little Silt, some medium Sand, trace subangular and subrounded Gravel grading to coarse SAND with little iron staining.
230		15	27-29	2.0	37, 45, 49, 60/1"	94	1.2		Medium brown subangular medium GRAVEL, some fine Sand, trace Silt, very poorly sorted, dense.
30									Split spoon refusal at 29' bgs. Auger refusal at 30' bgs.
225									Ross Rock @ EL 228.5
35									

Well/Boring Construction

- 5% Bentonite Cement Grout (1.5' - 21' bgs)
- 2" ID Sch. 40 PVC Riser (2.5' ags - 25' bgs)
- 3/8" Hydrated Bentonite Chip Seal (21' - 23' bgs)
- Grade #0 Morrie Sand Pack (23' - 30' bgs)
- 2" ID Sch. 40 PVC 0.010" Slot Screen (25' - 30' bgs)

BBL
BLASLAND, BOUCK & LEE, INC.
engineers & scientists

Remarks: bgs = below ground surface; NA = Not Applicable/Available; Ref = Refusal; (–) = Negative Shake Test Result.

Flores TEST BORING

105 Saunders Hill Road
New Boston, NH 03070
(603) 487-3844

PROJECT
Fletcher Paint Site
Milford, N.H.

REPORT OF BORING No. EB-18B
SHEET 1 OF 2
FILE No. 91054
CLIENT ADL

FOREMAN: T. Flores
METHOD HSA
BORING LOCATION See location Plan
GROUND SURFACE ELEVATION
DATUM
DATE START 12/12/91
DATE END 12/12/91

GROUNDWATER READINGS

Date	Water At	Casing At	Stabilization Time
	21'		

DEPTH (ft.)	SAMPLE No.	PEN. (in)/REC.	DEPTH (ft.)	BLOWS/6"	SAMPLE DESCRIPTION from ADL log CLASSIFICATION	STRATUM CHANGE	REMARKS
0	1	8/5	0-0.7	100/8"	Very dense, brown, fine to medium SAND, some Asphalt, Gravel		
5	2	24/12	5-7	38-37-15-15	Very dense, brown, fine to medium SAND, Gravel		
10	3	24/10	10-12	33-22-25-25	Dense, brown, fine to medium SAND, Gravel	FILL	
15	4	24/7	15-17	31-20-13-17	Dense, orange-grey, fine to medium SAND, coal slag, cinders		
	5	18/18	17-18.5	5-7-5	Medium dense, FILL: coal slag, cinders, plastic, organics, glass, porcelain		
	6	18/9	19-20.5	5-5-4	Loose, Asphalt shingles, cinders		
20	7	18/18	20.5-22	4-5-7	Medium dense, brown, fine to medium Silty SAND		
	7A	18/15	22-23.5	7-7-9	Medium dense, yellow brown, fine to medium SAND		
	7B	18/14	23.5-25	5-5-8	Medium dense, yellow brown, fine to medium SAND, wood, organics		
25	8	18/15	25-26.5	3-3-2	Loose, yellow brown, fine to medium SAND	25'	
26					GLACIAL	SAND	
30		18/0	30-31.5	7-7-9	No sample recovered		
	9	24/10	32-34	13-11-12-15	Medium dense, yellow brown, fine to medium SAND, gravel		

REMARKS:
1) Samples driven 18" - used 3" spoon with 300# hammer
2) Monitor well installed - Materials used: 10' of 2" PVC Screen
20' of 2" PVC Riser
Sand, Bentonite, Volclay Grout

NOTES
1. THE STRATIFICATION LINES REPRESENT THE APPROXIMATE BOUNDARY BETWEEN SOIL TYPES, TRANSITIONS MAY BE GRADUAL
2. WATER LEVEL READINGS HAVE BEEN MADE IN THE DRILL HOLES AT TIMES AND UNDER CONDITIONS STATED ON THE BORING LOGS. FLUCTUATIONS IN THE LEVEL OF GROUNDWATER MAY OCCUR DUE TO OTHER FACTORS THAN THOSE PRESENT AT THE TIME MEASUREMENTS WERE MADE.
3. UNLESS OTHERWISE NOTED, SAMPLER CONSISTS OF A 2" SPLIT SPOON DRIVEN USING A 140 lb. HAMMER FALLING 30 in.
4. UNLESS OTHERWISE NOTED, CASING DRIVEN USING 300 lb. HAMMER FALLING 24 in.

Flores TEST BORING

105 Saunders Hill Road
New Boston, NH 03070
(603) 487-3844

PROJECT
Fletcher Paint Site
Milford, N.H.

REPORT OF BORING No. EB-18B
SHEET 2 OF 2
FILE No. 91054
CLIENT ADL

DEPTH (ft.)	SAMPLE No.	PEN. (in)/REC.	DEPTH (ft.)	BLOWS/6"	SAMPLE DESCRIPTION from ADL log CLASSIFICATION	STRATUM CHANGE	REMARKS
35	10	18/14	35-36.5	4-5-4	Loose, yellow brown, fine to medium SAND, Gravel		
40	11	18/14	40-41.5	10-10-12	Medium dense, olive grey to yellow brown, fine SAND		
45	12	18/18	45-46.5	8-10-11	Medium dense, yellow brown, fine SAND; changing to Silty SAND	SAND	
50	13	18/14	50-51.5	10-14-15	Medium dense, yellow brown, Silty SAND		
					GLACIAL		
55	14	11/11	55-55.9	86-100/5"	Very dense, ~~yellow brown, Silty SAND; changing to Weathered Rock~~		
56						Bottom of Boring at 55.9'	
12/2/02					ROCK		

REMARKS:

Appendix G

Preliminary Project
Construction Schedule

General Electric Company
Fletcher's Paint Works and Storage Facility
Superfund Site - Milford, New Hampshire

DRAFT
FOR EPA REVIEW

Final (100%) Design Report - Project Construction Schedule - 12 Hour/Day OSD Remedy

ID	Task Name	Duration (Calendar Days)
1	EPA Review and Comment on Revised Final Remedial Design Report, Constructability Review Report, and Final Bid Documents	45 days
2	Revise and Resubmit Final Design Report, Constructability Review Report, and Final Bid Documents	30 days
3	EPA Review and Approval of Final Design Report, Constructability Review Report, and Final Bid Documents	14 days
4	**REMEDIAL ACTION CONTRACTOR PROCUREMENT/BID PHASE**	**301 days**
5	Prepare and Submit Pre-Qualified List of Remedial Action Contractors	30 days
6	EPA Review and Approval of Pre-Qualified List of Remedial Action Contractors	14 days
7	Solicit Bids for Remedial Action Contract Documents Including Final Bid Documents	1 day
8	Pre-Bid Meeting/Site Walk for Remedial Action	1 day
9	Receive Contractor Comments and Distribute Addenda for Remedial Action	30 days
10	Receive Contractor Bids for Remedial Action	1 day
11	Review Contractor Bids, Perform Interviews, Solicit Best/Final Bids, and Select Remedial Action Contractor	60 days
12	Submit Letter of Acceptance from the Selected Remedial Action Contractor	1 day
13	Negotiate/Execute Contract with Remedial Action Contractor and Issue Notice to Proceed	45 days
14	**Implement Accelerated Remedial Action Items**	**301 days**
15	Obtain Railroad Access	60 days
16	Issue Notice to Proceed with Relocation of Railroad	1 day
17	Relocation of Railroad Siding (by Guilford)	60 days
18	Relocation of Overhead Utilities Along Keyes Drive and Mill Street (by PSNH and FairPoint)	300 days
19	Construction of Alternate Access/Parking Area for Keyes Park and Parking Area Improvements on Parcel 25-11	120 days
20	**PRE-MOBILIZATION PHASE**	**194 days**
21	Prepare and Submit Remedial Action Work Plan, Revised POP, and Operation and Maintenance Plan	60 days
22	EPA Review and Comment on Remedial Action Work Plan, Revised POP, and Operation and Maintenance Plan	45 days
23	Revise and Resubmit Remedial Action Work Plan, Revised POP, and Operation and Maintenance Plan	30 days
24	EPA Review and Approval of Remedial Action Work Plan, Revised POP, and Operation and Maintenance Plan	14 days
25	Prepare and Submit Off-Site Shipping Notification	30 days
26	Contractor Prepares and Submits Pre-Mobilization Submittals	60 days
27	GE Reviews and Approves or Rejects Contractor Submittals	60 days
28	Contractor Revises and Resubmits Rejected Submittals	30 days
29	GE Reviews and Approves Resubmitted Items	14 days
30	Pre-Construction Conference	1 day
31	**CONSTRUCTION PHASE**	**479 days**
32	**Site Preparation Activities**	**170 days**
33	Mobilization and General Site Preparation	30 days
34	Identify and Temporarily Relocate Utilities	60 days
35	Construct Clean Backfill, Equipment, & Materials Staging Areas/Construct Temporary Excavated Materials Stockpile Areas	30 days
36	Construct Temporary Equipment and Personnel Decontamination Areas	15 days
37	Decommission Groundwater Monitoring Wells	15 days
38	Establish and Maintain Environmental Monitoring Stations	105 days
39	Construct Temporary Water Treatment System at Mill Street Area	30 days
40	Perform Start-Up Batch Testing (10,000, 25,000, 40,000 Gallon) at Temporary Water Treatment System	7 days

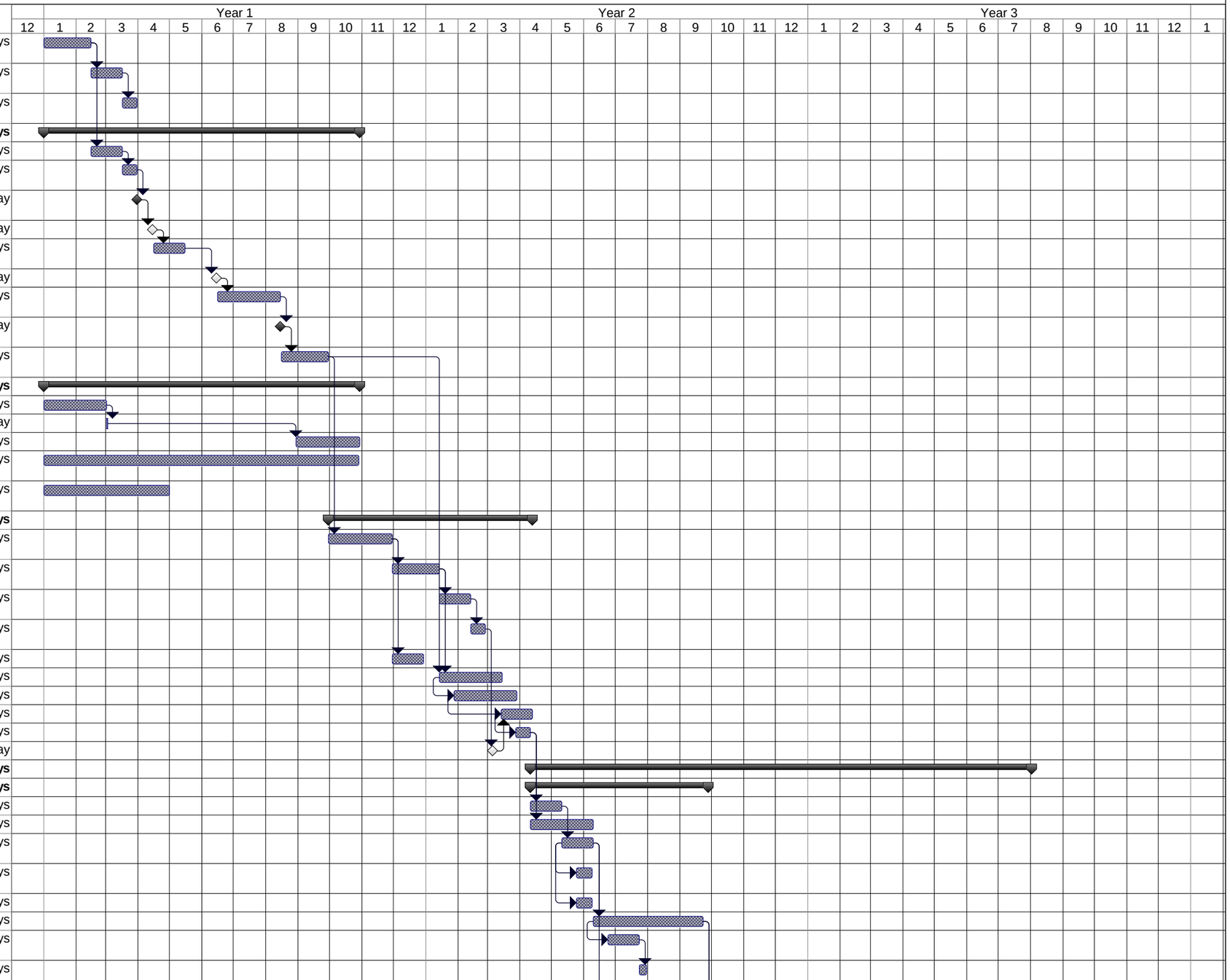

General Electric Company
Fletcher's Paint Works and Storage Facility
Superfund Site - Milford, New Hampshire

DRAFT
FOR EPA REVIEW

Final (100%) Design Report - Project Construction Schedule - 12 Hour/Day OSD Remedy

ID	Task Name	Duration (Calendar Days)
41	Installation of Excavation Support Systems for Deep Subsurface Soil Removal Areas	105 days
42	Off-Site Transportation and Disposal of Approximately 2,000 CY of Slurry Material Generated During Installation of SPTC Walls at the Mill Street Area	5 days
43	**Excavation, Handling, Off-Site Transportation/Disposal, & Backfill Excavations**	**130 days**
44	Operation and Maintenance of Temporary Water Treatment System	92 days
45	Continue Environmental Monitoring	70 days
46	Excavation and Handling of Approximately 16,285 CY of Phase 1 Soils from the Elm Street Area (Off-Site Transportation/Disposal of 15,460 CY; Segregation/Backfilling of 825 CY)	64 days
47	Excavation, Handling, and Off-Site Transportation/Disposal of Approximately 8,600 CY of Phase 1 Soils from the Mill Street Area (Off-Site Transportation/Disposal of 7,900 CY; Segregation/Backfilling of 700 CY)	34 days
48	Perform Excavation Bottom Verification Sampling & Backfill Phase 1 Excavation in Elm Street Area with Clean Imported Fill Material	74 days
49	Perform Excavation Bottom Verification Sampling & Backfill Phase 1 Excavation in Mill Street Area with Clean Imported Fill Material	44 days
50	Excavation and Handling of Approximately 8,115 CY of Phase 2 Soils from the Elm Street Area (Off-Site Transporation/Disposal of 5,790 CY; Segregation/Backfilling of 2,325 CY)	32 days
51	Excavation, Handling, and Off-Site Transportation/Disposal of Approximately 1,305 CY of Phase 2 Soils from the Mill Street Area (Off-Site Transporation/Disposal of 1,055 CY; Segregation/Backfilling of 250 CY)	6 days
52	Perform Excavation Bottom Verification Sampling & Backfill Phase 2 Excavation in Elm Street Area with Clean Imported Fill Material	42 days
53	Perform Excavation Bottom Verification Sampling & Backfill Phase 2 Excavation in Mill Street Area with Clean Imported Fill Material	16 days
54	**Preparation and Submittal of Long-Term Maintenance Plan, Environmental Monitoring Work Plan, and Revised Project Operations Plan**	**60 days**
55	**Site Restoration**	**198 days**
56	Operation and Maintenance of Temporary Water Treatment System	40 days
57	Continue Environmental Monitoring	40 days
58	Remove and Dispose of Temporary Staging/Decontamination Areas	20 days
59	Decontaminate/Demobilize Non-Essential Equipment & Materials	20 days
60	Restore Final Surfaces	60 days
61	Construct New Roads/Utilities	60 days
62	Install/Replace Groundwater Monitoring Wells	35 days
63	**Construction Close-Out Activities**	**24 days**
64	Pre-Final Construction Inspection	1 day
65	Completion of Any Remaining Construction Activities	15 days
66	Final Site Inspection	1 day
67	**POST-CONSTRUCTION PHASE**	**156 days**
68	Preparation and Submittal of Final Construction Completion Report	90 days
69	EPA Review and Approval of Final Construction Completion Report	60 days
70	Initiate Long-Term Maintenance and Environmental Monitoring	1 day

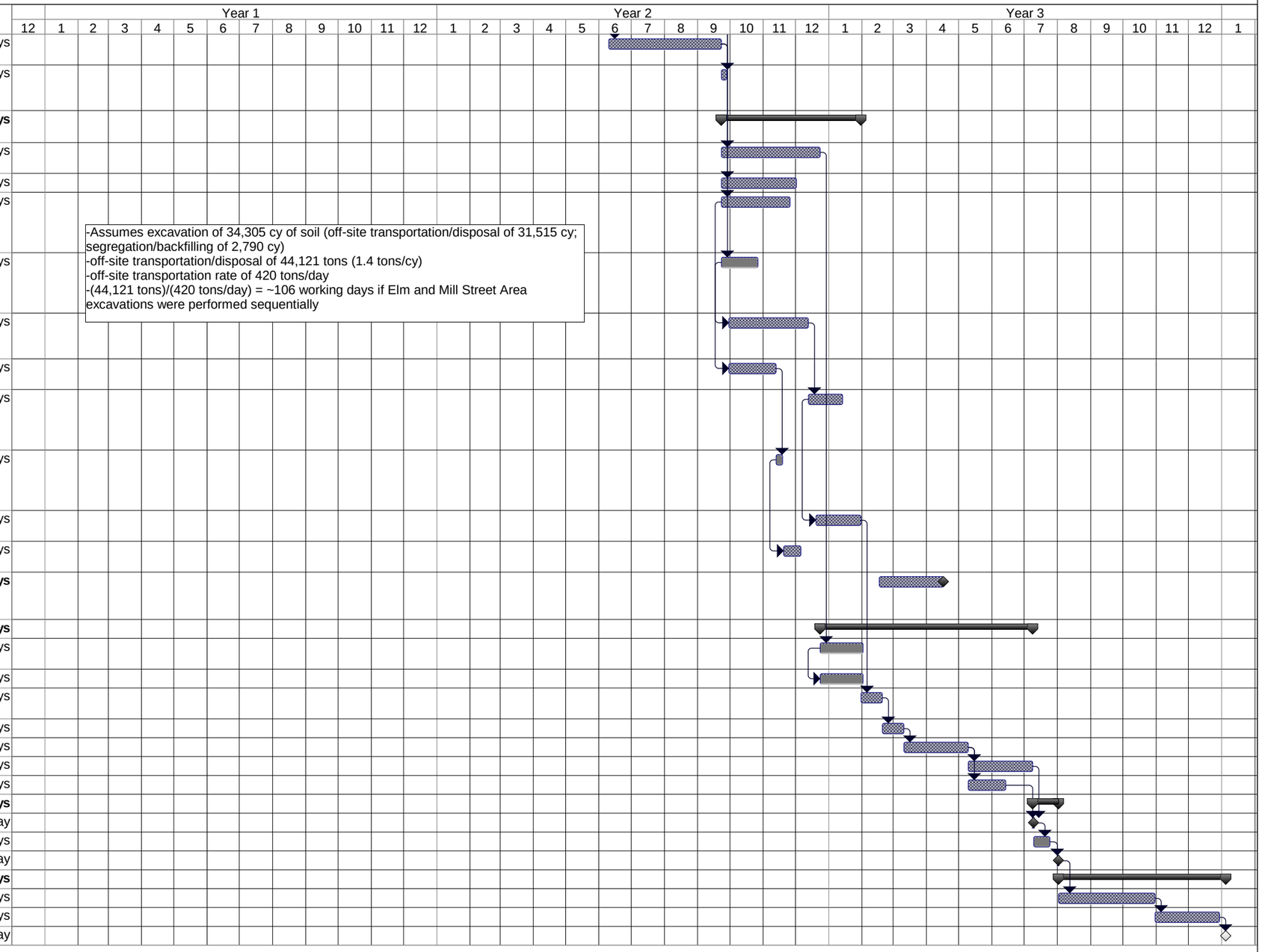

Appendix H

Construction Quality Assurance Plan

Imagine the result

DRAFT FOR EPA REVIEW

General Electric Company
Albany, New York

Construction Quality Assurance Plan

Appendix H to the Final (100%) Design Report for the OSD Remedy

Fletcher's Paint Works and Storage Facility
Superfund Site – Operable Unit 1
Milford, New Hampshire

November 21, 2012

DRAFT

FOR EPA REVIEW

Construction Quality Assurance Plan

Fletcher's Paint Works and Storage Facility Superfund Site – Operable Unit 1
Milford, New Hampshire

Prepared for:
General Electric Company

Prepared by:
ARCADIS of New York, Inc.
6723 Towpath Road
Syracuse
New York 13214-0066
Tel 315.449.3105
Fax 315.446.5807

Our Ref.:
B0020985.0000

Date:
November 21, 2012

ARCADIS

DRAFT
FOR EPA REVIEW

Table of Contents

Abbreviations **i**

1. Introduction **1**

1.1 Purpose and Objective 1

1.2 Format of CQAP 1

2. CQA Responsibilities **3**

2.1 General 3

2.2 CQA Team 4

2.3 Remedial Action Contractor 8

2.4 Other CQA Organizations 8

3. Pre-Construction CQA Activities **9**

3.1 Remedial Action Contractor Qualification 9

3.2 Technical Submittals 9

3.3 Site Inspections/Reviews 11

4. CQA Activities During Construction **12**

4.1 Mobilization/Site Preparation 12

4.2 Site Management 13

4.3 Survey Control 13

4.4 Erosion and Sediment Control Measures 14

4.4.1 Site Inspections/Reviews 14

4.5 QA/QC Requirements for Soil Removal and Backfilling 14

4.6 QA/QC Requirements for Engineered Cover System 14

4.6.1 Drainage Layer Soil 14

4.6.2 Low-Permeability Soil 15

4.6.3 Topsoil 15

4.6.4 Other Backfill/Restoration Materials 15

4.7 Documentation 16

4.7.1 Construction Summary Records 16

4.7.2 Deficiency Identification and Correction 17

4.7.3 Photographic Documentation 17

4.7.4 CQA Data Management 17

4.8 Site Inspections/Reviews 18

4.8.1 Pre-Excavation Inspection 18

4.8.2 Project Progress Meetings 19

4.8.3 Pre-Final Inspection 19

5. Post-Construction CQA Activities 21

Abbreviations

ASTM	American Society of Testing Materials
CQA	Construction quality assurance
CQAP	Construction Quality Assurance Plan
cy	Cubic yards
EPA	United States Environmental Protection Agency
ESD	Explanation of Significant Differences
Final Design Report	Final (100%) Design Report
GE	General Electric Company
HASP	Health and Safety Plan
LTTD	Low-Temperature Thermal Desorption
OSD	Off-Site Disposal
OU-1	Operable Unit 1
QA/QC	Quality assurance/quality control
RAWP	Remedial Action Work Plan
RD/RA	Remedial design/remedial action
ROD	Record of Decision
Site	Fletcher's Paint Works and Storage Facility Superfund Site
SMP	Site Management Plan
SOW	RD/RA Statement of Work

SWPPP	Stormwater Pollution Prevention Plan
Town	Town of Milford
UAO	Unilateral Administrative Order
VSP	Verification Sampling Plan

1. Introduction

1.1 Purpose and Objective

This *Construction Quality Assurance Plan* (CQAP) establishes the minimum quality assurance/quality control (QA/QC) activities, requirements, and procedures for construction-related activities associated with implementation of the remedial action for Operable Unit 1 (OU-1) soils at the Fletcher's Paint Works and Storage Facility Superfund Site (Site) located in Milford, New Hampshire. This CQAP was prepared in accordance with Paragraph 84 of the Unilateral Administrative Order (UAO) issued by the United States Environmental Protection Agency (EPA) to the General Electric Company (GE) on July 16, 2001, as modified by the EPA on August 15, 2001. The UAO requires GE to conduct pre-design, remedial design, and remedial action activities (collectively referred to herein as "RD/RA activities"), including the preparation of a CQAP as part of the final design. The overall objective of the CQAP is to ensure, with reasonable certainty, that the completed remedial action meets or exceeds its design criteria, plans, and specifications pursuant to EPA's: Record of Decision (ROD) for OU-1 dated September 30, 1998; the RD/RA Statement of Work (SOW) for OU-1 (which is Attachment C to the UAO, as modified); and an Explanation of Significant Differences (ESD) dated March 14, 2001. It should be noted that those documents were developed in support of a low-temperature thermal desorption (LTTD) soil remedy for the Site. As a result, portions of those documents are not applicable to the off-site disposal (OSD) soil remedy for which this CQAP was prepared

This CQAP is one of several plans that comprise GE's *Final (100%) Design Report for the OSD Remedy* (Final Design Report). The requirements of this CQAP, as approved by EPA, will, when approved or approved with modifications by EPA, be incorporated as appropriate into future Contract Documents. The contents of this plan may be modified based on site- or activity-specific considerations associated with a specific construction activity. Any such modifications or additions will be identified in the forthcoming *Remedial Action Work Plan* (RAWP) and/or other technical RD/RA submittals to EPA, and will be subject to EPA review and approval.

1.2 Format of CQAP

The remainder of this CQAP is presented in four sections. Section 2 lists parties involved in implementing the construction quality assurance (CQA) activities (hereinafter referred to as the "CQA Team") and describes the general responsibilities of each member of the team. Section 3 describes the typical CQA procedures and

activities that will be implemented prior to the initiation of construction activities at the Site. Section 4 discusses the CQA activities to be performed during construction activities. Finally, Section 5 describes the CQA procedures that will be conducted following the completion of the OSD soil remedy.

Appendix C of the Final Design Report provides additional information on certain types of CQA activities that will be performed during implementation of the OSD soil remedy at the Site. Specifically, Appendix C includes Technical Specifications for several types of construction-related materials and activities. It is anticipated that these Technical Specifications will be utilized, possibly with appropriate refinements and/or modifications for the specific construction activity (subject to EPA review and approval), during the performance of the OSD soil remedy. As a result, this CQAP supplements the CQA testing requirements required in the Technical Specifications. In addition, if further CQA information is developed during the course of RD/RA activities (e.g., during RAWP development), such information will be included in future amendments to this CQAP, revisions to Technical Specifications and/or additional Technical Specifications.

2. CQA Responsibilities

2.1 General

From an overall perspective, GE is subject to the UAO and therefore responsible for coordinating, performing, managing, and documenting that the remedial action is performed in accordance with the requirements of the ROD (subject to potential future amendment), the UAO and associated SOW, and the ESD. In addition, as provided in Paragraph 86of the UAO, the remedial action will be performed under the direction and supervision of the Supervising Contractor as identified by GE and approved by EPA. One specific component of these responsibilities -- as addressed by this document -- is the performance of CQA activities for construction-related response actions. As discussed below, CQA activities will be performed by a number of entities, all directly or indirectly under contract to GE.

In general, all of the activities and responsibilities associated with the implementation of the remedial action will be performed by a combination of three entities -- GE, ARCADIS BBL as the Design Engineer (including the Engineer of Record) and the CQA leader, and the Remedial Action Contractor. However, in the course of performing various CQA activities, GE may enlist the services of one or more other organizations to assist in managing, observing, testing, and/or documenting the performance of construction activities performed by the Remedial Action Contractor. Such personnel or organizations may include consultants to GE or, for particular tasks, specific testing laboratories, or other specialty organizations.

Further information regarding the roles of the CQA personnel/organizations is provided below. In addition, all contractors, consultants, and other organizations retained by GE to assist in implementing the remedial action and the associated CQA functions will be required to provide qualifications to perform such activities to GE for review. GE will conduct these reviews to ensure that each organization is capable of and experienced at performing the applicable project component. In determining the qualifications of a particular organization, GE will consider several factors, including experience, possession of required certifications, and licensing, and project team individuals. In addition, depending on the specific activity(ies), GE may also review the qualifications of the key individuals of an organization, considering the individual's experience, licensing/registration, education, etc. As noted above, all such personnel/organizations performing CQA functions will be directly or indirectly under contract to GE.

2.2 CQA Team

Supervising Contractor – For this project, GE will assign a Supervising Contractor for the remedial action phase of the OSD soil remedy. The Supervising Contractor will have knowledge of the scope, magnitude, and performance standards related to the construction activities to be performed at the Site.

With respect to the CQA aspects of construction-related activities, the general responsibilities of the Supervising Contractor include the following:

- Define project objectives, considering the applicable requirements of the UAO, the associated SOW, and the Final Design Report;
- Manage the development of technical work plans (e.g., RAWP) and other deliverables prior to their submission to the EPA;
- Coordinate the CQA activities described in this CQAP and as required in the technical RD/RA documentation for this remedial action; and
- Review and evaluate the performance and results of CQA activities with respect to planned requirements.

Project Manager – The Project Manager will be a representative of the Design Engineer and report to the Engineer of Record. The Project Manager will have demonstrated experience in a position of significant responsibility for construction projects similar in magnitude and complexity to the project being undertaken. The Project Manager will be knowledgeable of the project requirements and objectives, and will be familiar with the Technical Drawings and Technical Specifications (Appendices B and C, respectively, of the Final Design Report for the OSD soil remedy).

The Project Manager will have the following responsibilities for the implementation of the procedures in this CQAP:

- Serve as the official representative of the CQA Team;
- Maintain ultimate responsibility for the implementation of the procedures in this CQAP;

- Attend the pre-construction meeting to be held with representatives of GE, the Remedial Action Contractor, and the other members of the CQA Team;
- Provide the appropriate technical review of the Technical Drawings and Technical Specifications and modifications to the drawings and specifications made prior to initiation of the remedial action;
- Provide assistance to the Design Engineer and/or CQA Engineer in the review of shop drawings and other submittals from contractors and subcontractors;
- Review modifications to the Technical Drawings and Technical Specifications as they occur during construction for subsequent approval by the EPA;
- Serve as the primary contact person for the CQA Team; maintain contact with GE, the Engineer of Record, the Remedial Action Contractor, and its subcontractors regarding conformance with the requirements of this plan;
- Provide overall coordination of the activities of the CQA Engineer and CQA Observer(s);
- Provide assistance to the CQA Engineer in the review and interpretation of field and laboratory testing results;
- Perform periodic site visits to review progress and QA/QC procedures;
- Review the installed portion of work to permit further construction;
- Notify the CQA Engineer and CQA Observer(s) of deficiencies in QC testing results or procedures so corrective actions can be taken;
- Review the weekly construction summary reports;
- Review as-built construction drawings with the Design Engineer, CQA Engineer, and/or CQA Observer(s); and
- Prepare a *Final Construction Completion Report* (FCCR) for certification by the Engineer of Record.

CQA Engineer – The CQA Engineer will serve under the direction of the Project Manager or under certain circumstances may be the same person as the Project Manager. The CQA Engineer will be knowledgeable in soil excavation, earthwork, fill placement, asphalt road construction, and applicable test methods through a combination of formal education, training, and experience.

The CQA Engineer will have the following responsibilities in the implementation of the procedures in the CQAP:

- Attend the pre-construction meeting;
- Review daily construction reports prepared by the CQA Observer(s) and prepare weekly construction summary reports;
- Serve as the contact person for the CQA Team;
- Maintain routine contact with the Project Manager and the Remedial Action Contractor regarding conformance with QA/QC requirements;
- Review shop drawings and other submittals from the Remedial Action Contractor for conformance with the Technical Drawings and Technical Specifications and take appropriate action after review;
- Review field and laboratory QA/QC testing results and provide an interpretation of data to determine areas that are in conformance and nonconformance with the Technical Drawings and Technical Specifications. Determine areas that require rework and/or repair;
- Coordinate the activities of the CQA Observer(s);
- Perform regular site walkthroughs to review progress and QA/QC procedures; and
- Assist with review of as-built construction drawings and preparation of FCCR.

CQA Observer(s) – The CQA Observer(s) will work closely with the CQA Engineer and will have a demonstrated knowledge of earthwork, construction documentation, and applicable materials testing methods through a combination of formal education, training, and experience.

The CQA Observer(s) will have the following responsibilities in the implementation of the procedures in the CQAP:

- Attend the pre-construction meeting;
- Perform and document field and laboratory testing at the frequency established in this CQAP;
- Delineate areas of nonconformance based upon the results of field and laboratory testing;
- Observe and document field sampling for QA/QC testing;
- Monitor the delivery of samples to the analytical laboratory for testing;
- Observe construction materials such as soils delivered to the Site to determine general conformance with the Technical Specifications;
- Observe and record procedures used for erosion and sediment control measures;
- Observe and record procedures used for site preparation;
- Observe and record procedures used for protection, or decommissioning and subsequent replacement, of existing monitoring wells, and also the installation of any additional monitoring wells;
- Observe and record procedures used for excavation, backfilling, and grading of materials;
- Observe and record materials and procedures used for asphalt road construction;
- Record on-site activities that could result in damage to completed work and report these activities to the Remedial Action Contractor and the CQA Engineer immediately as they are noted;
- Take digital photographs to document observations, problems, deficiencies, and work in progress;
- Prepare daily construction reports; and

- Assist with review of as-built construction drawings and preparation of FCCR.

2.3 Remedial Action Contractor

GE will use a qualified Remedial Action Contractor to implement the OSD soil remedy. The process of selecting a qualified Remedial Action Contractor is described in Section 3. The Remedial Action Contractor will be responsible for performing the work activities in accordance with the technical design submittals developed for the remedial action, including Technical Drawings and Technical Specifications and other information contained in the Final Design Report and/or the RAWP. When necessary, the Remedial Action Contractor will subcontract with qualified organizations to perform certain aspects of the remedial action (e.g., surveys, cut-off wall construction, testing, etc.).

2.4 Other CQA Organizations

During the course of the remedial action, it may be necessary to use other qualified organizations to implement the CQA activities, such as a Testing Laboratory and a Licensed Surveyor. The qualifications and responsibilities of each party are described below.

Testing Laboratory - The CQA Testing Laboratory will be an independent testing laboratory. The Testing Laboratory will be responsible for testing soils during the implementation of the remedial action as directed by GE, the CQA Team, or in some instances the Remedial Action Contractor, and as required by this CQAP. Test data and reports completed by the CQA Testing Laboratory will be submitted directly to the CQA Project Manager.

Licensed Surveyor - Surveying activities will be performed as needed prior to, during, and at the completion of the remedial action. These surveying activities -- including the preparation of a baseline pre-construction survey, verification of removal limits (vertical and horizontal), and preparation of a survey of final site conditions (including excavation and backfilling limits, as documented on as-built construction drawings) -- will be performed by a Professional Land Surveyor licensed in the State of New Hampshire. This Licensed Surveyor may be retained by the Remedial Action Contractor, the Supervising Contractor and/or GE.

3. Pre-Construction CQA Activities

Prior to the implementation of construction-related activities, several QA/QC activities will be performed to ensure that the remedial actions are conducted in accordance with the Final Design Report and subsequent RAWP. The primary purpose of such pre-construction activities is to facilitate communications among the parties associated with the technical and implementation aspects of the remedial action.

3.1 Remedial Action Contractor Qualification

Prior to the selection of a Remedial Action Contractor, GE will perform a contractor qualification process to ensure that the Remedial Action Contractor is qualified to perform the proposed construction-related activities. This qualification process will include a review of prospective contractor's experience (and that of any key subcontractors, as appropriate) on projects of similar scope and magnitude. The prospective contractor will also be required to demonstrate that, at a minimum, the field superintendent has experience with similar construction projects and is familiar with the activities required as part of the remedial action.

3.2 Technical Submittals

For several elements of construction, the Remedial Action Contractor will be required to prepare technical data (e.g., proposed equipment, material test results, etc.) and plans for review by the CQA Team. This requirement is intended to document the Remedial Action Contractor's understanding of the remedial design and thus minimize the potential for misinterpretation that could impact the outcome of the remedial action. The submittal of technical data (also referred to as shop drawing submittals) encompasses many elements of the construction activity. In general, technical submittals that will be required as part of the remedial action may include the following:

- Implementation-related plans and procedures, including proposed methods or techniques for meeting the design requirements;
- Performance data;
- Design drawings;
- Operating descriptions;

- Layout drawings; and
- Detail drawings.

Each of the Technical Specifications included in Appendix C of the Final Design Report identifies the technical submittals that will be required in connection with the topic covered by that specification. Any modified or new Technical Specification will likewise identify the required submittals. Any proposed modifications to the scope of work as outlined in the Final Design Report and/or the subsequent RAWP, or any deviations from the information contained in this CQAP, must be identified within these submittals for review and acceptance by the Design Engineer. Any significant modifications will be subject to EPA review and approval.

The technical submittal review process will be an essential activity for monitoring QA/QC before construction is initiated. The Design Engineer will prepare a register of technical submittals required from the Remedial Action Contractor. This register will be used to monitor the status of contractor submittals and corresponding review by the Design Engineer. The Remedial Action Contractor's submission of a technical submittal will constitute its representation that the Remedial Action Contractor has determined and verified all quantities, dimensions, field construction criteria, materials, model numbers, and similar data set forth in that submittal. In addition, the Remedial Action Contractor's submittal will demonstrate that it has reviewed and/or coordinated that submittal with the applicable requirements of any Technical Drawings and Technical Specifications (including QA/QC requirements, as appropriate). The review of technical submittals will include determining general compliance with the Final Design Report and/or subsequent RAWP, as appropriate. Technical submittals will be reviewed and stamped by the Design Engineer as follows:

- "Reviewed" - If no objections are observed or comments made;
- "Reviewed and Noted" - If minor objections, comments, or additions are made but resubmittal is not considered necessary;
- "Resubmit" - If the objections, comments, or additions are extensive, or if transmittal to another party is required; and
- "Rejected" - If the submittal under consideration is not, even with reasonable revision, acceptable, or when the data submitted are not sufficiently complete to establish compliance with the Technical Specifications or Technical Drawings. In

this case, the Remedial Action Contractor must resubmit a new or modified submittal which meets the scope and intent of the work specified in the Technical Specifications or Technical Drawings.

The Remedial Action Contractor will not be permitted to perform any activity that directly or indirectly involves the item covered by the technical submittal until a "Reviewed" or "Reviewed and Noted" stamp is provided by the Design Engineer.

3.3 Site Inspections/Reviews

Prior to the start of construction activities, a pre-construction meeting will be held among GE, the Remedial Action Contractor, the CQA Team, and the Design Engineer. The topics covered at this meeting may include some or all of the following:

- Familiarizing each organization with current site conditions, the site-specific QA/QC procedures, and the role of this CQAP relative to the design criteria, plans, and specific information;

- Discussing other applicable components of the *Site Health and Safety Plan* (HASP), the *Project Operations Plan* (which includes a *Site Management Plan* [SMP], a *Sampling and Analysis Plan* [comprised of a *Quality Assurance Project Plan* and *Field Sampling Plan*] and a *Community Relations Support Plan*), the *Contingency Plan*, and forthcoming plans including the RAWP and an *Ambient Air Monitoring Plan*;

- Discussing the established procedures and protocols for any construction change orders, deficiencies, repairs, and retesting;

- Reviewing methods of documenting and reporting data;

- Reviewing work area security and safety protocols;

- Discussing procedures for the location and protection of construction equipment and materials, and for the prevention of damage of equipment and materials from inclement weather or other adverse conditions; and

- Conducting a site walk-through to review site conditions, including work areas and approximate limits of work, as well as staging and storage locations.

4. CQA Activities During Construction

During the active construction phase(s) of the project, several QA/QC mechanisms will be implemented to monitor the progress of the response actions, assess the activities as they relate to the attainment of the applicable performance standards, and identify, as early as possible, any issues that may affect the performance and schedule of the construction activities.

4.1 Mobilization/Site Preparation

The Remedial Action Contractor will mobilize to the Site and conduct site preparation activities in accordance with the Final Design Report (specifically the Technical Drawings and Technical Specifications, included in Appendices B and C, respectively) and the forthcoming RAWP. Site preparation activities conducted by the Remedial Action Contractor will include numerous activities, including, at a minimum, the following:

- Coordinating with local utilities, as necessary, for relocation of utilities, access to potable water, etc.;
- Verifying and thoroughly documenting existing site conditions;
- Mobilizing labor, equipment, and materials to the Site;
- Constructing remediation support areas, as needed, such as material staging areas; storage areas; and equipment, material, and personnel decontamination areas;
- Establishing work area(s) and installing temporary fencing and erosion/ sedimentation controls around the perimeter of the work area;
- Establishing temporary/alternate access roads for use by adjacent properties owners; and
- Protection/decommissioning of monitoring wells.

During mobilization/site preparation activities, representatives of the CQA Team will conduct several activities, including at a minimum, the following QA/QC activities:

- Monitor the Remedial Action Contractor's progress in completing all necessary notifications to perform certain remedial actions (e.g., appropriate Town personnel, utility companies, etc.);

- Review equipment brought to the Site by the Remedial Action Contractor in terms of general cleanliness and working condition;

- Review soil erosion and sediment control measures installed by the Remedial Action Contractor; and

- Review of existing structure protection procedures (e.g., wells, trees, property features, etc.).

4.2 Site Management

The Remedial Action Contractor will provide for site management throughout the implementation of the construction activities. These site management activities are detailed in the Final Design Report, RAWP and SMP and include security/control measures, dust control measures during construction activities, and soil erosion and sedimentation control measures. The CQA Team will be responsible for verifying that the appropriate site management measures are implemented and maintained in accordance with the applicable design criteria, plans and specifications.

4.3 Survey Control

As part of the remedial action, construction surveys will be performed to ensure/document consistency with the Technical Drawings and Technical Specifications. The survey activities will generally include: performing periodic surveys during the construction activities to verify lines, grades, and levels; documenting testing and sampling locations; and surveying final site conditions for preparation of as-built documentation. Certain of these activities (including verification of removal limits and preparation of a final survey of site conditions) will be performed by a Licensed Surveyor retained by the Remedial Action Contractor or the CQA Team. The other survey activities, where conducted, may be performed by the Remedial Action Contractor or the CQA Team.

4.4 Erosion and Sediment Control Measures

Prior to the start of the remedial activities, erosion and sediment control measures will be constructed/installed/placed by the Contractor in general accordance with the Contract Drawings, the approved SWPPP and Section 02260 (titled Dust, Erosion and Sedimentation Control).

4.4.1 Site Inspections/Reviews

The Contractor and the CQA Observer will document, through visual observations, that erosion and sediment control measures are constructed and maintained in accordance with the Contract Drawings, approved SWPPP and Section 02260 (titled Dust, Erosion and Sedimentation Control).

4.5 QA/QC Requirements for Soil Removal and Backfilling

In general, the OSD soil remedy will involve the removal of existing soils, and other materials, and replacement with acceptable backfill materials. QA/QC procedures for these activities will be implemented prior to and during the excavation and backfilling activities to ensure that the applicable performance standards are achieved. Specific technical requirements for the earthwork activities have been developed by the Design Engineer and are included in relevant sections of the Final Design Report, as well as the *Verification Sampling Plan* (VSP) included as Appendix A of the Final Design Report.

4.6 QA/QC Requirements for Engineered Cover System

The OSD soil remedy involves the installation of a multi-layered soil cover at the Elm Street Area. Construction of the engineered cover system includes a combination of low permeability soil, drainage soil, and a topsoil layer. The performance criteria pertaining to these soil material types (e.g., permeability, particle size requirements, etc.) have been identified on the Technical Drawings and in the Technical Specifications. The QA/QC activities pertaining to each of these soil cover components are discussed below.

4.6.1 Drainage Layer Soil

The QA/QC requirements for the drainage layer soil component of the engineered cover system include:

- Grain size distribution pursuant to American Society of Testing Materials (ASTM) D422-63 (2002) for:
  - Every 3,000 cubic yards (cy) of unprocessed sand; or
  - Every 10,000 cy of sand which has been processed to meet the project specifications.
- Hydraulic conductivity pursuant to ASTM D2434-68 (2000) for each new source of sand material.

4.6.2 Low-Permeability Soil

The QA/QC requirements for the low-permeability soil layer component of the engineered cover system include:

- Laboratory compaction testing pursuant to ASTM D1557-02 at a frequency of one test per 1,000 cy;
- Laboratory permeability testing pursuant to ASTM D5084-00 at a frequency of one test per 1,000 cy;
- In-place field density testing pursuant to ASTM D6938-10 at a frequency of 1 per 5000 square feet of each lift of low permeability soil; and
- In place sampling and laboratory permeability testing pursuant to ASTM D1587-00 and ASTM D5084-00 at a frequency of two tests per acre of constructed cap.

4.6.3 Topsoil

The QA/QC requirements for the topsoil soil layer component of the engineered cover system are identical to the requirements for topsoil used at other areas of the Site and are therefore provided in the Technical Specifications.

4.6.4 Other Backfill/Restoration Materials

Specifications and testing requirements for all other soils/materials installed during the OSD soil remedy are provided in the Final Design Report (specifically on the Technical

Drawings and in the Technical Specifications). Materials that are identified to be out of compliance will be replaced or re-worked until CQA testing verifies their conformance.

4.7 Documentation

The documentation of CQA activities will support the demonstration that the construction activities were carried out in accordance with the requirements of the Final Design Report and/or the RAWP approved or approved with modifications by EPA. The documentation process includes identification of construction tasks that should be observed, tested, and documented; assignment of responsibilities for the observation, testing, and documentation of these tasks; and finally, the completion of the reports, data sheets, forms, and check lists as necessary to provide an accurate record of the work performed during construction.

The CQA Team will prepare the appropriate reports, data sheets, forms, and check lists, as described below, to document that the appropriate CQA activities have taken place.

4.7.1 Construction Summary Records

Construction summary records will be maintained by the CQA Team to document the construction activities. The construction summary records will typically contain the following information:

- Date, project name, location, and the names of any visitors;
- Description of weather conditions;
- Remedial Action Contractor's personnel, equipment, and materials delivered to or removed from the Site;
- Description of work in progress;
- Results of any CQA testing; and
- Problem/deficiency identification and documentation describing any corrective actions performed for field problems and non-conformance with the technical RD/RA submittals including this CQAP.

4.7.2 Deficiency Identification and Correction

Construction summary records will include documentation of problems and/or deficiencies noted during construction (e.g., when construction material or activities are observed or tested that do not meet the requirements established in this plan) and corrective action employed to address the problems or deficiencies. Problem and deficiency identification and corrective action documentation may include the following information:

- A description of the problem or deficiency, including any references to supplemental data or observations related to the problem or deficiency;
- Location of the problem or deficiency, including how and when the problem or deficiency was discovered; and
- The corrective action taken or to be taken to resolve the problem or deficiency.

The CQA Team will determine if the problem or deficiency is an indication of a situation that might require changes to the remedial design and/or the CQAP. If this situation develops, a meeting will be held with GE and the Design Engineer, to determine if revisions to the remedial design and/or this CQAP should be made. Any significant revisions to the remedial design and/or CQAP will be reviewed by GE with the Design Engineer and submitted for review and approval by EPA.

4.7.3 Photographic Documentation

As appropriate, digital photographs will be taken to supplement written CQA information and to document observations, problems, deficiencies, and work in progress. Pertinent information related to the photographs (e.g., date, time, location of photographs, etc.) will be documented in the construction summary record or a log book.

4.7.4 CQA Data Management

The management of CQA data generated throughout the remedial action will be the responsibility of CQA Team. These data may include:

- Data sheets;

- Photographic logs;
- Field sampling and testing results;
- Laboratory analytical results;
- Health and safety monitoring results;
- Equipment calibration and testing results;
- Construction summary records; and
- Documentation identifying corrective measures taken to resolve any problems or deficiencies, including any significant revisions to the remedial design, CQAP, or the Technical Drawings, Technical Specifications and/or technical submittals to resolve such problems or deficiencies.

Pertinent data will be compiled and presented in a FCCR, as further discussed in Section 5.

4.8 Site Inspections/Reviews

Site inspections/reviews will be conducted at various times during the remedial action activities. A brief description of the site inspections/reviews that may be conducted is provided below.

4.8.1 Pre-Excavation Inspection

Prior to the start of excavation activities, and possibly in conjunction with the pre-construction meeting described in Section 3.3, GE, the CQA Team, and the Remedial Action Contractor will conduct a pre-excavation inspection to determine that procedures and equipment necessary to perform the construction activities are in place and operational, that the Remedial Action Contractor is prepared to efficiently manage the various waste streams to be generated during the remedial activities, and that the Remedial Action Contractor has taken steps to comply with the requirements of its HASP, the Contingency Plan, and the SMP.

If deficiencies are noted during the pre-excavation inspection, the Remedial Action Contractor will be required to take corrective actions. Once any required corrective action has been completed, construction activities may proceed.

4.8.2 Project Progress Meetings

As appropriate, project progress meetings will be held periodically and will be attended by GE, the CQA Team, and the Remedial Action Contractor. The purpose of the meetings will be to:

- Discuss the Remedial Action Contractor's personnel and equipment assignments for the near-term future;
- Review recent work activities;
- Review any health and safety issues;
- Review the upcoming work schedule and overall project schedule;
- Discuss any design/construction problems and possible solutions;
- Review test data; and
- Discuss any outstanding issues.

The project progress meetings will be documented by the CQA Team, and minutes transmitted as needed to the attending parties.

4.8.3 Pre-Final Inspection

Near the completion of the OSD soil remedy, GE, the CQA Team, and the Remedial Action Contractor will conduct a pre-final inspection. The pre-final inspection will consist of a site walk-through to evaluate the completeness of the construction and its consistency with the Final Design Report and/or subsequent RAWP.

Following the pre-final inspection, the CQA Team will either specify activities to address any deficiencies or deviations from the Final Design Report and/or subsequent RAWP, as appropriate, or will determine that construction of the remedial action is complete (for the purposes of contract close-out with the Remedial Action Contractor).

If additional construction activities are required, the Design Engineer will prepare a punch list and corresponding schedule to complete the activities for review by the Remedial Action Contractor. The Remedial Action Contractor will then complete the additional activities within the timeframe set forth in the agreed-upon schedule.

Separate from the inspection activities described above, GE, the Supervising Contractor, and the Remedial Action Contractor will be required to participate in two inspections required under Paragraph 98 of the UAO. The first inspection is a pre-certification inspection that will be attended by EPA and the New Hampshire Department of Environmental Services (NHDES). That inspection is required within seven days of GE's conclusion that construction activities are complete/have been fully performed. The purpose of that inspection is to determine/develop a punch list of items that need to be performed before EPA and NHDES concur that the construction activities are complete. Within 15 days of GE determining that the punch list items have been resolved and the remedy meets the performance standards for soils, the second inspection required under Paragraph 98 of the UAO will be performed. That final site inspection will also be attended by EPA and NHDES in addition to GE, the Supervising Contractor, and the Remedial Action Contractor.

5. Post-Construction CQA Activities

At the completion of the OSD soil remedy, all QA/QC information obtained throughout the construction period (including pre-construction activities) will be compiled and summarized in the FCCR. It is anticipated that the FCCR will contain the following types of information, as relevant and necessary.

- A summary describing the construction activities and the QA/QC testing performed prior to and during the remedial action;
- Record drawings documenting the completed construction as it relates to the Technical Drawings, sampling locations, etc.;
- A summary of field observations and tests performed (including topographic surveys), laboratory samples collected, and test results reported;
- A summary of problems and deficiencies encountered during construction and the applicable solutions; and
- Documentation that acceptance QA/QC criteria were met, including a comparison of documented procedure data with proposed technical information and requirements set forth in this CQAP.

The FCCR will also include a certification that the remedial action was performed in accordance with the requirements of the ROD (as amended to implement the OSD soil remedy), the UAO and associated SOW (as amended to implement the OSD soil remedy), the ESD (as clarified by EPA in response to GE's April 19, 2007 letter) and that the applicable performance standards were met, as stipulated in the above-listed documents.

Appendix I

Contingency Plan

Imagine the result

DRAFT FOR EPA REVIEW

General Electric Company
Albany, New York

Contingency Plan

Appendix I to the Final (100%) Design Report for the OSD Remedy

Fletcher's Paint Works and Storage Facility
Superfund Site - Operable Unit 1
Milford, New Hampshire

November 21, 2012

DRAFT

FOR EPA REVIEW

Contingency Plan

Fletcher's Paint Works and Storage Facility Superfund Site – Operable Unit 1
Milford, New Hampshire

Prepared for:
General Electric Company
Albany, New York

Prepared by:
ARCADIS of New York, Inc.
6723 Towpath Road
P.O. Box 66
Syracuse
New York 13214-0066
Tel 315.446.9120
Fax 315.449.0017

Our Ref.:
B0020895

Date:
November 21, 2012

ARCADIS

DRAFT
FOR EPA REVIEW

Table of Contents

1. Introduction 1

1.1 Purpose and Objective 1

1.2 Site History and Description 2

1.3 Copies and Amendments of Contingency Plan 3

1.4 Format of Contingency Plan 3

2. Roles and Responsibilities 5

2.1 Individuals/Organizations 5

2.2 Responsibilities of Key Personnel 5

2.2.1 GE and SC Project Managers 5

2.2.2 Contractor Emergency Coordinator(s) 6

2.2.3 First Responders 7

3. Preparedness and Prevention 9

3.1 General 9

3.2 Site Security 9

3.3 Training 9

3.4 Safe Work Practices 11

3.5 Hazard Assessment and Work Site Audits 12

3.6 Specific Preparedness and Preventative Measures 12

3.6.1 General Operational Procedures 13

3.6.2 Hazard Prevention 14

3.6.2.1 Release of Untreated Groundwater 14

3.6.2.2 Release of Excavated Material 15

3.6.2.3 Fires and Explosions 15

3.6.2.4 Equipment Failure 15

3.6.3 Inspection Schedule 16

3.6.4 Arrangements with Local Authorities 16

3.7 Unanticipated Work Conditions 16

3.8 Preparation of Evacuation Plan(s) 16

4. Emergency Procedures and Equipment 18

4.1 General 18

4.2 Designation of Emergency Coordinator 18

4.3 Emergency Equipment 19

4.3.1 Communications Systems 19

4.3.2 Fire-Fighting Equipment 19

4.3.3 Spill Control Equipment 19

4.3.4 Personal Protective Equipment 20

4.4 Emergency Procedures 20

4.4.1 Initial Notifications 20

4.4.2 Emergency and Spill Response Procedures 22

4.5 Notifications Under Unilateral Administrative Order 23

5. Post-Emergency Actions 25

5.1 Follow-up to Reportable Releases 25

5.2 OSHA Notification 25

Tables

I-1 Temporary Water Treatment System

I-2 Equipment Inspection Log

I-3 Waste Container Inspection Log

I-4 Maximum Detected Constituent Concentrations in Soil and Reporting Guidelines

I-5 Maximum Detected Constituent Concentrations in Groundwater and Reporting Guidelines

I-6 Maximum Detected Constituent Concentraitons in DNAPL

I-7 Federal, State and Local Emergency Response Agencies

I-8 Emergency Contacts

Figures

I-1 Site Location Map

I-2 Site Map

I-2A Elm Street Area – Emergency Response Plan

I-2B Mill Street – Emergency Response Plan

I-3 Evacuation Assembly Locations and Hospital Route Map

Attachments

A Emergency Response Report Form

B Spill Report Form

1. Introduction

1.1 Purpose and Objective

This *Contingency Plan* (CP) presents a description of the procedures which will be followed by personnel responding to emergency incidents associated with implementation of the Remedial Action for Operable Unit 1 (OU-1) at the Fletcher's Paint Works and Storage Facility Superfund Site (Site) located in Milford, New Hampshire. This CP was prepared in accordance with Paragraph 84 of the Unilateral Administrative Order (UAO) issued by the United States Environmental Protection Agency (EPA) to the General Electric Company (GE) on July 16, 2001, as modified by the EPA on August 15, 2001 and June 11, 2010. The UAO (as modified) requires GE to conduct pre-design, Remedial Design, and Remedial Action activities (collectively referred to herein as "RD/RA activities"), including the preparation of a CP as part of the final design.

The purpose of this CP is to establish minimum precautionary/preventative measures that will be taken during the Remedial Action to minimize the likelihood of releases, fires, explosions, medical injuries, or other similar emergency situations. In addition, in the event that such emergency situations do occur or are anticipated to occur, this plan establishes predetermined courses of action to be implemented. Descriptions of equipment that will be used for cleanup in the event of a spill or release are also included in this plan. The procedures established in this CP were designed with the objective of minimizing potential risks or hazards to worker, public health, and the environment, from any unplanned sudden or non-sudden events related to implementation of the remedial action.

This CP will be used the Remedial Action Contractor and other contractors performing work at the Site when developing their site-specific Health and Safety Plans (HASPs) and Contingency Plans. These documents will include task-by-task analyses of potential physical, chemical, and biological hazards and will also include descriptions of any required protective equipment, site-specific control measures, and emergency response procedures associated with the specific elements of the OU-1 soil remedy, which the specific parties will be responsible for implementing over a one- to two-year period. The groundwater monitoring component of the OU-1 Remedial Action is expected to continue on a long-term basis (i.e., for several decades).

This CP is one of several plans that are included in GE's revised *Final (100%) Design Report for the OSD Remedy* (Final Design Report). The contents of this plan may be modified or amended, if necessary based on administrative, site- or activity-specific considerations associated with a specific construction activity as outlined in Section 1.3.

Any such modifications or amendments will be identified in the forthcoming *Remedial Action Work Plan* (RAWP) and/or other technical RD/RA submittals to EPA, and will be subject to EPA review and approval. Any modifications or amendments will also be distributed to the appropriate local agencies discussed in Section 1.3.

1.2 Site History and Description

Since this CP provides detailed emergency response procedures for the Site, a brief summary of the Site history and description is provided herein for ease of reference. However, Section 1.4 of the revised Final Design Report presents a detailed discussion regarding the history and description of the Site.

As indicated in Section 1.1, EPA issued a UAO for the Site on July 16, 2001, as modified by the EPA on August 15, 2001 and June 11, 2010, directing GE to conduct an RD/RA program to design and implement the remedy selected by EPA for the Site, as described in EPA's: (a) Record of Decision (ROD) for OU-1 dated September 30, 1998, as amended on June 15, 2009; (b) Explanation of Significant Differences (ESD) dated March 14, 2001; (c) a second ESD on September 30, 2010; and (d) RD/RA Statement of Work (SOW) dated July 16, 2001, as amended on August 15, 2001 and June 11, 2010 and which is Attachment C to the UAO. The UAO (as modified) governs the performance of RD/RA activities to address polychlorinated biphenyls (PCBs) and other hazardous substances that EPA has found in soil, sediment, groundwater, and/or surface water at OU-1.

Excluding the area of impacted groundwater, OU-1 measures approximately 2 acres in size and generally consists of the following three areas:

- The former Fletcher's Paint Works Site (39 Elm Street) referred to as the Elm Street Area;
- The former Fletcher's Paint Storage Facility (north side of Mill Street) referred to as the Mill Street Area; and
- A drainage ditch/culvert system that traverses in a northerly direction from Mill Street Pond to the Souhegan River.

The Site is located within a mixed-use area consisting of residential and light commercial/industrial properties immediately west of the center of Milford, as shown on Figures I-1 and I-2. Since the 1800s, the Site has had many agricultural and commercial uses, including serving as the Milford town dump for more than 20 years, from 1921 to

1947. From 1948 until 1991, Fletcher's Paint operated its business at the Site. Fletcher's operations included the manufacture, storage, and distribution of water-based latex paints and organic-based solvent paints, with an annual production volume ranging between 25,000 to 35,000 gallons. Also, Fletcher's Paint operated as a "middle man," obtaining and selling for profit industrial chemicals and other materials.

According to EPA, the areas that comprise OU-1 were identified based on a number of considerations, including geographic location, prior regulatory definition and status, scope and timing of response actions, current and reasonably foreseeable land use, and nature and extent of the affected media. These areas include the Elm and Mill Street Areas (now owned by the Town of Milford [Town]) and private property in the vicinity of those parcels. The Souhegan River and Keyes Field are part of Operable Unit 2 (OU-2).

1.3 Copies and Amendments of Contingency Plan

Copies of this CP will be maintained at the Site by the Emergency Coordinator or his/her designee(s). Copies of this plan will be distributed to the appropriate local agencies discussed in Section 3.6.3. Amendments or revisions to this CP may be made due to changes in the Remedial Design or Remedial Action activities at the Site, such as:

- The Remedial Design changes in a way that increases the potential for fires, explosions, or releases of hazardous waste or hazardous waste constituents, or changes the response necessary in the event of an emergency;
- The list of Emergency Coordinators changes;
- The list or location of emergency and/or spill control equipment changes significantly; and/or,
- The plan fails during an emergency incident.

The appropriate local agencies that may be called upon to provide emergency services at the Site will be provided with any such revision and/or amendment.

1.4 Format of Contingency Plan

The remainder of this CP is presented in five sections. The title and a brief overview of the contents of each section are provided below:

- **Section 2** - **Roles and Responsibilities,** provides a description of the individuals/ organizations involved with the implementation of this CP and provides a description of the responsibilities of each of those parties.

- **Section 3 - Preparedness and Prevention,** describes the standard activities that will be implemented in an attempt minimize the need for emergency response activities. This section also describes the activities that will be performed to prepare for the possibility that emergency response actions will be required at the Site.

- **Section 4 - Emergency Procedures and Equipment,** establishes the procedures that will be implemented in the event of an emergency and specifies the minimum requirements for emergency equipment that must be maintained at the Site.

- **Section 5 - Post-Emergency Actions,** describes the actions required upon completion of emergency response activities.

2. Roles and Responsibilities

This section provides a brief description of the individuals/organizations covered by this CP and the responsibilities of each of those individuals/organizations related to implementation of the CP.

2.1 Individuals/Organizations

Given that a Remedial Action Contractor for the soil component of the OU-1 Remedial Action has not been selected at the time this CP was prepared, the contents of this section are necessarily general and subject to further definition (as needed) within future work plans (i.e., the RAWP) and/or other supplemental Remedial Design submittals prepared subsequent to the Final Design Report, of which this CP is a part.

Consistent with the general nature of this plan, all of the primary activities, roles, and responsibilities associated with this CP will be performed by GE and the Supervising Contractor (SC). However, in the course of an emergency response action, the Emergency Coordinator specified in Section 4.2 may enlist the services of one or more other organizations to assist in implementing this CP.

Implementation of this CP during the performance of RD/RA activities is the overall responsibility of GE and the SC. The GE and SC Project Managers will be involved in all emergency measures that may be required at the Site. Assisting the GE and SC Project Managers will be any on-site contractor Emergency Coordinators and First Responders (as defined in Section 2.2.2). The specific functions performed by GE, the SC, and other support entities are described below in Section 2.2. In addition to these key personnel and entities, any GE, SC, or other contractor employee who observes or identifies an emergency situation has certain duties, including noting relevant information regarding the emergency and making an initial notification, as described further in Section 4.4.1.

2.2 Responsibilities of Key Personnel

2.2.1 GE and SC Project Managers

The GE and SC Project Managers will serve as the primary point of contact for all phases of the RD/RA activities. In this role, the GE and SC Project Managers will be involved in all emergency/contingency planning and in the response to any emergency measures that are taken.

GE and SC Project Managers must be familiar with the: 1) layout of the Site; 2) nature of the activities to be performed; 3) location and characteristics of hazardous materials that are handled or encountered; 4) location, type, and operation of fire control and spill control/cleanup equipment at the Site; and 5) location of pertinent documents and records.

In the event of a chemical release, fire, explosion, medical injury, or other emergency situation, the GE and SC Project Managers will perform or assist others in performing the following activities:

- Gather available information regarding the nature and extent of the emergency;
- Arrange for notification to and deployment of a Response Contractor, as necessary;
- Notify other local agencies (e.g., police, fire department), as well as federal and state agencies, as needed;
- Coordinate temporary storage and disposal of any cleanup material;
- Assure compatibility of stored cleanup material with other stored wastes;
- Prepare written follow-up reports regarding the incident as required by various regulatory requirements applicable to the response actions involved (a sample Emergency Response Report Form is provided as Attachment A to this plan);
- Stop operations and prevent recurrence of the incident(s) (e.g., require additional training, provide additional engineering controls or other corrective measures);
- Review and approve or modify proposed evacuation/hospital routes (Figures I-2, I-2A and I-2B) and assembly areas for on-site personnel; and
- Perform periodic assessments of work area conditions and emergency readiness, including audits of available emergency equipment and documentation of changes in work area conditions that may warrant modification of this CP.

2.2.2 Contractor Emergency Coordinator(s)

The performance of RD/RA activities at the Site may require one or more contractors (other than the SC). Unless otherwise directed by GE, each such contractor will be responsible for appointing a Contractor Emergency Coordinator.

The Contractor Emergency Coordinator will be responsible for implementation of any contractor-specific aspects of this CP and for ensuring that the proper precautions are taken by the contractor's employees to prevent emergencies from occurring. The Contractor Emergency Coordinator's routine responsibilities include:

- Provide training regarding evacuation routes and assembly areas for contractor personnel;
- Performance of periodic assessments of work area conditions and emergency readiness, including audits of available emergency equipment and documentation of changes in work area conditions which may warrant modification of this CP; and
- Maintenance of communications with the Field Team Leader to ensure that the contractor's activities will not inhibit the ability of other on-site personnel to react to emergency situations.

In the event of a chemical release, fire, explosion, medical emergencies, or other emergency situation, the Contractor Emergency Coordinator will:

- Provide the appropriate initial notifications (or verify that they have been made by other observers), depending on the location of the specific incident, as described in Section 4.4.1;
- Gather available information regarding the nature and extent of the emergency; and
- Perform additional duties as specified in the contractor's emergency response procedures and/or as directed by the GE or SC Project Manager.

2.2.3 First Responders

As required by applicable regulations and the UAO (as modified), GE will provide notice to various federal, state, and local government authorities of certain releases or threatened releases of oil or hazardous substances or materials. In the event that a spill, fire, or other incident leads to such a release or threatened release, the GE Project Manager, with assistance from the SC Project Manager and the First Responder (the first party observing and/or responding to the emergency), will be responsible for providing the appropriate notice. Specifically, the First Responder will:

- Gather information regarding the release;
- Assess the information received to determine if a reportable release has occurred; and,
- Based on the above assessment, assist the GE and SC Project Managers in notifying the appropriate authorities or organizations and in preparing any necessary written reports regarding the release.

3. Preparedness and Prevention

3.1 General

This section presents the preparedness and prevention procedures for work activities conducted at the Site. Specifically, this section provides descriptions of: site security; personnel training; safe work practices; hazard assessment and work site audits; specific preparedness and preventative measures to be implemented at the Site; unanticipated work conditions; and preparation of an evacuation plan(s) in the event of an emergency. Additional details regarding each of these activities are provided in the following sections.

3.2 Site Security

The majority of the Elm Street Area is currently secured by perimeter fencing with locking gates. The fence is generally located along the perimeter of the Site. Specifically, chain-link fencing, and in some places jersey barriers, are located along Elm Street, excluding the parking lot for the former building. On the western boundary, the fencing extends approximately 350 feet along the east side of Keyes Drive, then turns towards the Souhegan River and subsequently traverses along the top of the riverbank for approximately 500 feet, where it turns and runs along the property boundary between the cemetery and the Elm Street Area. Access to the Elm Street Area is through a locked gate located along the section of fence adjacent to the parking lot. During the pre-design investigation (PDI), GE added additional temporary orange construction/snow fencing extending down the riverbank and along the bottom of the riverbank. GE also installed temporary wire fencing around the perimeter of the Mill Street Area (i.e., Parcel 25-111 owned by the Town) during the PDI.

During implementation of the OU-1 soil remedy, site security will be maintained by perimeter fencing around the work areas, which includes the Exclusion Zones (EZs) (e.g., active excavation, material handling, and water treatment areas), Contaminant Reduction Zones (CRZs) (e.g., personnel and equipment decontamination areas), and Support Zone(s) (SZs) (e.g., field office trailers, contractor clean equipment and material staging areas, including the SZ located in Keyes Park near the Elm Street Area). Additional details regarding site access/security requirements and the EZs, CRZs, SZs and site security for the OU-1 soil remedy are provided in Sections 3.3 and 3.5 of the Final Design Report.

3.3 Training

Any employee or subcontractor hired by GE, the SC, or the Remedial Action Contractor to implement or inspect the OU-1 Remedial Action will be required to complete a site-specific training program. This program shall be conducted by an individual who is familiar with

elements of the Remedial Action, this CP, and a site-specific HASP. As part of that training, those employees or subcontractors involved with the OU-1 soil remedy will be provided with copies of the Final Design Report, this CP, and HASP to review and to acknowledge receipt and review of the applicable documents. Employees or subcontractors involved with groundwater-related components of the OU-1 Remedial Action will be provided with copies of the *Surface Water and Groundwater Monitoring Plan*, also referred to as the *Water Monitoring Plan* [WMP]), the *Environmental Monitoring Plan* (EMP), this CP, and the HASP to review and to acknowledge receipt and review of the applicable documents.

The requirements for the above-listed training, the timing for such training, and when employees may be allowed to engage in Site activities (which could expose them to health and safety hazards) are typically identified in a HASP. In accordance with that document, any visitors to the Site will be informed of the hazards associated with the Site, including potential exposures to chemical constituents and measures that should be taken to minimize these exposures.

The training program will be directed by a person trained in hazardous waste management procedures, including a 40-hour hazardous waste training course that meets the requirements of Occupational Safety and Health Administration (OSHA) regulations at 29 CFR 1910.120(e)(2), and the manager/supervisor training that meets the requirements of OSHA regulations at 29 CFR 1910.120 (e)(3). All personnel must complete an initial training program as well as a yearly review of the training material (if appropriate). Training for personnel will be documented and maintained on file at the Site. Training may include, but not be limited to, the following:

Implementation of OU-1 Soil Remedy

- Review of site-specific HASP;
- Review of this CP;
- Walk-through inspection and description of the remedy components;
- If applicable, demonstration of the operating and shutdown procedures for the temporary water treatment system, and review of the associated Operations and Maintenance (O&M) Plan; and
- Review of Remedial Action Contractor-specific procedures and/or O&M manuals for equipment/systems associated with implementation of the OU-1 soil remedy.

Other Activities

- Review of site-specific HASP;
- Review of this CP;
- Overview of work task to be completed; and
- Discussion of potential hazards specific to the work task to be conducted

All personnel who conduct activities associated with implementation of the Remedial Action that may potentially contact hazardous materials at the Site are required to have proper training, as required by 29 CFR Part 1910, for hazardous waste sites including 40-hour training and annual refresher training pursuant to the OSHA regulations.

In addition to training, on-site personnel must have appropriate medical clearance to wear respirators and other protective equipment, as required, and to respond to releases or emergencies at the Site. In addition, personnel working at the Site are required to wear personnel protective equipment (e.g., protective goggles, gloves, or other protective clothing) appropriate for the tasks they are performing. Additional information regarding personnel protective equipment and required training and medical surveillance are provided in the site-specific HASP.

3.4 Safe Work Practices

To minimize the potential for accidents, injuries, and dangerous situations, as well as to minimize the potential for emergency situations, standard safe working practices should be identified and implemented by personnel working at the Site. Prior to engaging in on-site activities, all personnel must attend a pre-site entry safety meeting and review the HASP and this CP, as well as any other appropriate contractor-specific health, safety and emergency response procedures. All work area personnel have the following responsibilities pertaining to work area activities:

- Take all reasonable precautions to prevent injury to themselves and co-workers;
- Implement the requirements of the HASP and other applicable contractor-specific health and safety plans;

- Perform only those tasks that can be performed safely; and
- Immediately report any accidents, unsafe conditions, near misses, and/or other incidents as set forth in the HASP and this CP.

3.5 Hazard Assessment and Work Site Audits

Periodic work area hazard assessments and audits may be conducted by the GE or SC Project Managers, the Remedial Action Contractor, Emergency Coordinators, or other individuals. Modifications to contractor-specific safety programs may be made based on the results of the hazard assessments or work site audits. In addition to the information provided herein, these hazard assessments and work site audits should be preformed in accordance with Section 4 of the HASP, which provides details regarding safe-performance self assessments, loss prevention observations, and job safety analyses (in addition to providing other general safety procedures).

The purpose of work area hazard assessments is to provide continuing recognition and analysis of potential safety hazards. Because of the changing nature of field projects, supervisors must continually inspect the work area to identify hazards that may affect personnel, the community, or the environment. Items typically evaluated during a work area hazard assessment include, but are not limited to:

- Availability of required personal protective equipment and clothing;
- Adequacy of safety-related monitoring;
- Evaluation of potential hazards relating to the tasks being performed; and
- Maintenance of first aid supplies and emergency response equipment.

Work site audits are performed to ensure that personnel have received the appropriate training and are performing their duties in the safest manner possible, and in compliance with the applicable safety requirements. Issues that arise from work site audits will be conveyed to the appropriate personnel (e.g., SC and Remedial Action Contractor Project Managers) who will identify and implement corrective actions.

3.6 Specific Preparedness and Preventative Measures

This section provides information regarding specific preparedness and preventative measures based upon the scope of the Remedial Action. As previously indicated, the Remedial Action Contractor will be required to prepare a site-specific HASP prior to

implementation of the OU-1 soil remedy. That document will have additional information (as appropriate) regarding the preparedness and preventative measures applicable to the work performed by the Remedial Action Contractor.

The purpose of the procedures presented in this section is to describe how work activities will be conducted at the Site to minimize the possibility of an incident which would necessitate implementation of the emergency procedures in the next section. The preparedness and prevention procedures that will be implemented during work activities to be conducted at the Site are detailed below.

3.6.1 General Operational Procedures

Work activities performed at the Site will be conducted to minimize the possibility of a fire, explosion, or any unplanned sudden or non-sudden release of hazardous waste constituents that could threaten human health or the environment. Provisions that are intended to minimize the possibilities of a fire, explosion, or release during implementation of the OU-1 Remedial Action include the following:

- Areas used to stage or manage impacted materials during the OU-1 soil remedy will be constructed with high density polyethylene (HDPE) liners and berms to provide secondary containment for releases that could occur within areas used for the treatment, handling, or temporary storage of impacted materials, as described in the revised Final Design Report.

- The tanks associated with the temporary water treatment system that will be used for the OU-1 soil remedy will be equipped with high-level instrumentation, which will alarm if the level in the tank reaches a critical height and will have the ability to control pump operation and system flow rate.

- Regular inspection (at least once per week) of the contractor equipment (e.g., the temporary water treatment system, earth moving equipment, generators, etc.) to ensure that the equipment is in good condition and that no releases have occurred. An example inspection log for a temporary water treatment system that will be used for the OU-1 soil remedy is included in Table I-1.

- Regular inspection (at least once per week) and replacement (if necessary) of on-site emergency equipment and emergency monitoring system (e.g., fire extinguishers, telephones, overflow alarms for the temporary water treatment system, etc.) to ensure that the equipment is properly functioning and available to respond in the unlikely event of an emergency incident. An inspection log for the emergency equipment and monitoring systems is included in Table I-2.

- Appropriate spill response equipment, including absorbents, is provided and maintained at appropriate locations within the Site. An inspection log for the spill response equipment is also included in Table I-2.

- Regular inspection of any hazardous waste temporarily stored at the Site. Inspections will be performed as required depending on type of container or at least once per week. An inspection log for waste containers is included in Table I-3.

- Material Safety Data Sheets (MSDSs) for substances (e.g., gasoline, other fuel/oils, propane, cleaning products, etc.) stored on-site during the Remedial Action will be maintained in the field trailer(s) in accordance with the requirements of the site-specific HASP.

Protocols that are implemented to address specific potential hazards that could occur are summarized below.

3.6.2 Hazard Prevention

This section contains a description of the procedures, structures, or equipment that will be used to minimize the following potential hazards:

- Release of untreated groundwater;

- Release of excavated materials;

- Fires and explosions; and

- Equipment failure.

Preventative measures utilized to reduce the likelihood for the above-listed potential hazards are discussed below.

3.6.2.1 Release of Untreated Groundwater

Secondary containment is provided for all equipment for the temporary water treatment system. Regular inspections (at least once per week) of the temporary water treatment system components, secondary containment structures, and any staged wastes will be conducted to evaluate integrity. The piping to the temporary water treatment system will also be inspected regularly (at least once per week). Other containers (i.e., tanks, drums) used to store groundwater (and also other fluids such as dewatering and decontamination water) that are not located at the temporary water treatment system will also be inspected

regularly (at least once per week). The frequency of inspections must follow a written schedule which is to be maintained at the Site.

3.6.2.2 Release of Excavated Material

The following precautions will be taken when performing soil excavation activities to minimize the impacts to the surrounding environment that would result from a release of excavated material:

- Implementation of silt fencing and/or hay bales, as necessary, around the perimeter of the work area and temporary stockpiles to contain any potential spills and to minimize the exposed area that would be impacted in the event of a spill or release;
- Use of contained, lined vehicles for off-site transportation of certain excavated soils;
- Direct loading of excavated materials, to the extent possible (i.e., minimize/eliminate "double handling");
- Minimizing dust resulting from the transport, handling, and/or placement of impacted and clean soils materials (e.g., including soil covers) with the use of dust suppression methods (e.g., watering, foaming);
- Installing daily covers (e.g., tarps) at the end of each working day over stockpiles;
- Having spill containment and cleanup materials readily available for use, if necessary; and,
- Dust monitoring during soil materials handling activities.

3.6.2.3 Fires and Explosions

Given the nature of the materials being handled during the OU-1 Remedial Action, the risk of fire or explosions is low. However, fire fighting and spill containment and cleanup equipment will be maintained at the Site in the event of releases of impacted material due to fire or explosion.

3.6.2.4 Equipment Failure

As indicated in Section 3.6.1, the Remedial Action Contractor will be required to routinely inspect and perform appropriate maintenance on equipment utilized to implement the OU-1 soil remedy, such that the potential for releases due to equipment failure is reduced. As

necessary to avoid releases of untreated groundwater during power outages, the contractor will be required to have emergency generator(s) at the Site to maintain power to the temporary water treatment system.

3.6.3 Inspection Schedule

All inspections must follow a written schedule which must be maintained at the Site. Inspection requirements and frequency of inspection vary depend on the storage container type (e.g., tanks require daily inspection) and/or type of equipment.

3.6.4 Arrangements with Local Authorities

Local emergency agencies (e.g., police, fire) that would respond in the event of an emergency at the Site will be contacted to familiarize them with the activities that may be conducted at the Site, contaminants in soil and groundwater being handled at the Site, other hazardous materials (e.g., dense non-aqueous phase liquids [DNAPLs], other oils, gasoline, chemicals, etc.) that may be handled at the Site, areas where personnel will normally be working, entrances to the Site, and evacuation assembly areas. The local hospital will also be contacted and provided information regarding the contaminants in the soil and groundwater at the Site and what types of activities are being performed at the Site. Tables I-4, I-5 and I-6 present summaries of the maximum detected constituent concentrations in soil, groundwater and DNAPL at the Site.

3.7 Unanticipated Work Conditions

During the performance of OU-1 Remedial Action at the Site, conditions may be encountered which are not anticipated based on previously available information. These conditions could include unmarked underground utilities or other subsurface features not previously identified (e.g. tanks, cylinders, intact drums, etc.).

If unanticipated conditions are encountered, work should stop, the location should be secured and isolated to the extent practical and appropriate for the situation, and the GE and SC Project Managers should be contacted for instructions.

3.8 Preparation of Evacuation Plan(s)

Each contractor performing work associated with the OU-1 Remedial Action must establish evacuation and emergency response procedures as part of its contractor-specific health safety plan. This plan must also specify the alarm system(s) that will be utilized to call for an evacuation of the contractor's work area and provide evacuation routes and assembly areas for workers leaving the area. For consistency purposes, a universal evacuation

signal of three long blasts of an air horn (or other loud device) will be required in each contractor's HASP. All personnel entering the Site will be informed of the evacuation signal and route, and the assembly area. Evacuation routes will be planned to extend through the CRZ in order to decontaminate personnel evacuating from an EZ (time permitting and if personnel are not in imminent danger) and to obtain a preliminary accounting of personnel. Alternate evacuation routes will be established in the event that the primary route is blocked or is otherwise impassable.

Emergency Response Plans for the Elm Street Area (Figure I-2A) and Mill Street Area (Figure I-2B) show evacuation routes, assembly areas, and the location of emergency response equipment and emergency postings. Figure I-3 shows evacuation routes and directions to the hospital. The evacuation assembly area for the Elm Street Area will be located at the Korean War Memorial located on Elm Street adjacent and east of the Site; the assembly area for the Mill Street Area will be located at the former Lumbertown building located on Cottage Street across from the Mill Street Area. All workers, regardless of affiliation, should assemble in the same general area if evacuation is necessary.

4. Emergency Procedures and Equipment

4.1 General

One objective of the OU-1 Remedial Action is to perform the soil and groundwater remedies in a manner that minimizes the potential for an emergency situation to arise, or if such a situation arises, to minimize its magnitude. However, during the performance of such activities, the potential exists for the unplanned sudden or non-sudden release of hazardous materials to air, soil, or surface and groundwater, as well as the possibility of fire and explosion. Should such an emergency situation arise, countermeasures should be implemented quickly and in a manner that will protect the safety of workers and emergency response personnel, and will mitigate potential adverse impacts to the public and the environment.

Every emergency is a unique event that must be dealt with by trained personnel working in a calm, controlled manner. In the event of an incident, the prime consideration is to provide the appropriate initial response without placing additional personnel at unnecessary risk.

Following the identification of an emergency, general instructions for making the necessary notifications and initiating response activities are provided in Section 4.4. In that connection, Table I-7 of this plan contains a list of phone numbers that may be used to contact federal, state, and local authorities and/or response contractors to report or respond to an incident. Contingency measures for spills and discharges from materials handling or transportation, or otherwise occurring during the course of performing the Remedial Action are discussed in Section 4.4.2.

4.2 Designation of Emergency Coordinator

At least one employee with primary responsibility for coordinating emergency response measures will be on-call at all times. The Emergency Coordinator and his/her alternate(s) will be thoroughly familiar with all aspects of this CP, all remedial operations and activities at the Site, the location and characteristics of the impacted materials and wastes handled at the Site, the location of records, and the layout of any remedial system(s).

The Emergency Coordinator and Alternate Emergency Coordinators are responsible for determining whether this CP needs to be implemented in response to an emergency incident during work activities conducted at the Site. These persons will have the authority to commit the resources necessary to carry out this CP. The current Emergency and Alternate Emergency Coordinator list for work activities conducted at the Site is presented in Table I-8. This table will be revised if personnel changes are made.

4.3 Emergency Equipment

Emergency equipment will be available prior to the commencement of project activities. This section describes the emergency equipment that may, depending on the specific remediation activities, need to be present at the Site.

4.3.1 Communications Systems

The potential for an emergency situation exists during the performance of the Remedial Action at the Site. Therefore, personnel involved with these activities shall have access to a telephone, two-way radio, or other emergency communication device. Before and during the OU-1 soil remedy, telephones will be located within the office trailer(s) in the SZ. As a contingency, telephones are available at the surrounding commercial businesses or residential properties. Cellular telephones can also be utilized, and will be the primary means of communication at the Mill Street Area, unless access to an alternate communications device (e.g., two-way radio) is available. However, in the event of an unsafe condition (e.g., equipment fuel leak), personnel should evacuate the area prior to using cellular phones.

4.3.2 Fire-Fighting Equipment

Portable fire extinguishers of adequate size, class, number, and location as required by applicable sections of 29 CFR 1910 and 1926 should be present at all work locations. All extinguishers should be inspected on a monthly basis and undergo preventative maintenance on an annual basis. Table I-2 lists the emergency equipment that must be maintained at the Site.

The SC's Field Team Leader will be responsible for identifying the location of any fire hydrants located at or adjacent to the Site. The areas around fire hydrants at or immediately adjacent to the Site shall be kept clear of contractor equipment and debris to allow access to the hydrants to any responding authorities (e.g., Milford Fire Department) in the event of an emergency. Any use of a fire hydrant for non-emergency-related activities (e.g., water supply for dust control operations) will only be allowed following approval of the appropriate Town of Milford department.

4.3.3 Spill Control Equipment

Spill control equipment and related materials must be available at work areas where the potential for a release of hazardous materials exists. Sorbent pads and other absorbent materials, plastic sheeting, brooms, and shovels should be immediately available in the event of a spill to contain and control released materials and to prevent their spread to off-

site areas. All sorbent materials used for the cleanup of spills will be containerized and labeled appropriately. Clean, empty containers should also be available for containment of spill debris and used cleanup materials. Table I-2 lists the spill control equipment that must be maintained at the Site.

4.3.4 Personal Protective Equipment

Personal protective equipment (PPE) is required to safeguard personnel from various hazards. Personal protective gear, such as hard hats, gloves, boots, coveralls, face shields, and respirators should be utilized, as needed. Varying levels of protection may be required depending on the degree of physical or chemical hazards present at the Site and the type of activity being performed. The various levels of protection and the conditions of use for each level will be discussed in the site-specific HASP(s) established by the various contractors performing remediation activities at the Site.

4.4 Emergency Procedures

This section provides information regarding the procedures to be implemented at the Site upon identification of an emergency situation that requires implementation of this CP.

4.4.1 Initial Notifications

Upon identification of an emergency situation, several notification and response activities will be performed by the entities identified in Section 2.2.1 of this CP, including the First Responder and the Emergency and/or Alternate Emergency Coordinators. This section of the CP describes the general notification procedures that should be followed in response to the identification of an emergency situation.

For the most part, it is anticipated that any emergency situation will be first identified by a person who is involved in the performance of the Remedial Action. That observer (which could the First Responder) should, to the extent that he/she can do so safely, identify the emergency by surveying the incident and noting (and ultimately recording on an Emergency Response Report Form – see Attachment A) the information below, if possible:

- Type of emergency (fire, spill, explosion, etc.);
- Location (e.g. on site, roadway, open field, etc.) and migration potential;
- Source of emergency (breach of underground utility line, equipment malfunction, slope failure, etc.);

- Material identification (visual appearance, odors, etc.); and/or
- Impact of emergency (persons injured, extent of spill, etc.).

In the event of a spill, release, fire, explosion, medical emergency, or other emergency situation related to implementation of the OU-1 Remedial Action within the Site, the observer will immediately notify the Emergency and/or Alternate Emergency Coordinator(s).

However, it may also be possible that an emergency situation is first identified by persons other than those directly involved in the Remedial Action, such as a property owner or other public entity. In this case, that person or entity may be involved in the first communications regarding the emergency. Upon learning of the emergency situation, the Emergency and/or Alternate Emergency Coordinator(s) will ensure that the initial notifications described below have been made. If possible, the Emergency and/or Alternate Emergency Coordinator(s) will also contact the observer of the incident in order to identify relevant information concerning the type of emergency and any initial response actions undertaken.

Emergency situations that occur at the Site will be responded to in the following manner:

1. The first observer of the emergency will call the Milford emergency number, then the Emergency and/or Alternate Emergency Coordinator(s), and finally the GE and SC Project Managers (if different from the Emergency and/or Alternate Emergency Coordinator[s]) and Contractor Emergency Coordinator and/or his/her designee (if different from the observer). Emergency response phone numbers are provided in Table I-7.

2. The GE Project Manager will coordinate with the SC Project Manager and Contractor Emergency Coordinator and/or his/her designee regarding the reporting of the incident to other appropriate authorities. Depending on the specific incident, such reporting may be required by the Comprehensive Environmental Response, Compensation, and Liability Act (CERCLA) (Section 103), the Emergency Planning and Community Right-to-Know Act (EPCRA) (Section 304), the Clean Water Act (CWA) (Section 311), the Toxic Substances Control Act (TSCA), the EPA regulations under those statutes, and other applicable state and local regulations.

   In the event of an on-site emergency event and the implementation of this CP, phone numbers are provided in Table I-7 to make notifications to:

- Emergency 911, Milford Fire and Police Departments and other as needed (e.g., ambulance;

- NHDES Petroleum Spills or Hazardous Materials/Waste Spills (NH State Police Emergency Response if emergency occurs at night or on weekends)

- EPA Remedial Project Manager

In the event of a spill, release, fire, or explosion that extends off site and which could threaten human health, or the environment, the Emergency and or Alternate Emergency Coordinator(s) must report findings as follows:

1. Assess and determine if evacuation of local areas may be advisable. If evacuation is advisable, immediately notify local authorities and be available to help appropriate officials decide whether local areas should be evacuated.

2. Immediately notify EPA's Remedial Project Manager (RPM) or, if the RPM is unavailable, EPA's Alternate RPM, or if neither of these persons is available, the Emergency Response Unit, EPA Region 1, or the United States Coast Guard – National Response Center (Table I-7)

4.4.2 Emergency and Spill Response Procedures

In the event that a spill or other discharge of hazardous materials occurs during performance of the Remedial Action, the notification procedures described above will be implemented. In addition, initial measures taken in response to the spill will be implemented. This section describes the general activities that will be taken in response to a spill event. The information presented herein is general and intended to be expanded upon by the specific contractors involved and contained within their contractor-specific HASPs.

During an emergency, the Emergency Coordinator (and/or the Alternate Emergency Coordinator) must take all reasonable measures to ensure that fires, explosions, or releases do not occur, recur, or spread off site. Response measures must include, where applicable: stopping processes and operations; collecting and containing released waste; and removing or isolating containers. If the Site operations are halted in response to an emergency, the Emergency Coordinator must monitor all equipment, where appropriate, for leaks, pressure buildup, gas generation, or ruptures in valves, pipes, or other equipment.

In general, the techniques used for hazardous waste spill containment and cleanup will vary with the location, type of spill, and the materials spilled. Vehicular traffic and personnel must be alerted and diverted from the area until responding authorities arrive on the scene. If possible, the source of the spill should be secured and actions should be taken to contain the spill. Only persons with appropriate training should perform these initial response actions, and only when it will not endanger themselves and others. Protective equipment must be worn, as required, when attempting such actions. The availability of emergency equipment for spill cleanup is discussed in Section 4.3.

The methods used for spill response will depend on the type of material spilled, the extent of the spill, and the type of area at which the spill occurred. In the event that a container becomes damaged, material should be transferred from the container as soon as practical. Ruptured hose or pipe sections should be isolated by closing valves between the rupture and the material source(s). In the event of a spill outdoors, nearby drains and catch basins should be covered with plastic sheeting and surrounded with absorbent material to prevent the spilled material from entering. If spilled material reaches an open waterway, booms should be placed downstream to prevent further migration of the released material. Following containment of a spill or release, the released material will be cleaned up with absorbents and placed into other containers for proper disposal and a Spill Report Form (Attachment B) should be filled out.

Immediately after an emergency, the Emergency Coordinator must provide for treating, storing, or disposing of recovered waste, subsequently contaminated soil, water or any media that is impacted as a result of the release. No waste that may be incompatible with released materials may be treated, stored or disposed of until the emergency response procedures are completed and all emergency equipment listed herein is cleaned, restored/replaced, and fit for its intended use before operations are resumed. Before site operations resume in the affected area of the site, the GE or SC Project Manager must notify EPA and the appropriate state and local authorities that the site cleanup has been completed in accordance with this CP.

4.5 Notifications Under Unilateral Administrative Order

As noted above, the notification/reporting that must be made in the event of an emergency or other release of hazardous substances or materials may include notifications under a variety of laws and regulations, including CERCLA, EPCRA, the Clean Water Act and TSCA. In addition, the UAO (as modified) issued by EPA to GE for this Site establishes certain specific notification requirements for emergencies and certain other releases of hazardous substances. Those requirements are summarized below.

Under Paragraph 106 of the UAO (as modified), if any event occurs which causes or threatens to cause a release of a hazardous substances or which may present an immediate threat to public health or welfare of the environment, GE (and it's contractors) shall immediately take all appropriate action to prevent, abate or minimize the threat, and shall immediately notify EPA's Remedial Project Manager (RPM) or, if the RPM is unavailable, EPA's Alternate RPM, or if neither of these persons is available, the Emergency Response Unit, EPA Region 1.

5. Post-Emergency Actions

Following an emergency, the GE and/or SC Project Managers will perform appropriate written and verbal follow-up activities. Depending on the applicable reporting and regulatory requirements, the GE and/or SC Project Managers will gather and summarize in writing, if necessary, the information to be provided to the appropriate agencies. The following section summarizes post-emergency actions to be completed.

5.1 Follow-up to Reportable Releases

As noted above, certain releases of hazardous substances or materials must be reported verbally to various federal, state, and local agencies under applicable laws and regulations. To the extent that these laws and regulations require written follow-up reports, such reports will be made.

5.2 OSHA Notification

In the event that injuries or fatalities occur during the emergency at the Site, OSHA must be notified by the employer of the injured employee. The threshold reporting requirements are one fatality or three employees taken to the hospital for examination, observation, or treatment. Pursuant to 29 CFR 1904.8, notification must be made within eight hours of obtaining the information regarding the employees involved in the emergency.

Verbal notification is made to:

U.S Department of Labor – OSHA Region 1

133 Portland Street – 1st Floor

Boston, MA 02114

Tel. 617.565.7164

OSHA, depending on the circumstances of the emergency, may also request a written follow-up report and other documentation. OSHA reserves the right to conduct an investigation of the cause of any reported injury or fatality.

Tables

TABLE I-1
TEMPORARY WATER TREATMENT SYSTEM

FLETCHER'S PAINT WORKS AND STORAGE FACILITY SUPERFUND SITE
GENERAL ELECTRIC COMPANY - MILFORD, NEW HAMPSHIRE

	Yes	No
Deterioration of containment system (i.e., liner rips, degraded joints)		
Deterioration of tanks (i.e., corrosion, leaks)		
Deterioration of treatment equipment (i.e., corrosion, leaks)		
Deterioration of piping, valves, or pumps (i.e., cracks, leaks)		
Any signs of releases from tanks, piping, valves, or pumps (i.e., seeps, standing water, staining)		
Comments:		

Date: _____

Inspector:_____(Print)

_____(Sign)

TABLE I-2
EQUIPMENT INSPECTION LOG

FLETCHER'S PAINT WORKS AND STORAGE FACILITY SUPERFUND SITE
GENERAL ELECTRIC COMPANY - MILFORD, NEW HAMPSHIRE

EMERGENCY AND MONITORING EQUIPMENT	Yes	No
ABC fire extinguisher(s) charged		
Telephone(s) in operating condition		
Cellular telephone(s) in operating condition		
All alarms functioning		
Comments:		

SPILL CONTROL EQUIPMENT	QUANTITY – MILL STREET	QUANTITY – ELM STREET
Absorbent materials		
Containment booms		
Nitrile gloves		
Rubber boots		
Tyvek coveralls		
Hard hats		
Safety goggles		
Ear plugs		
Empty 55-gallon drums		
Broom		
Shovel		
Comments:		

Date: _____

Inspector:_____(Print)

_____(Sign)

TABLE I-3
WASTE CONTAINER INSPECTION LOG

FLETCHER'S PAINT WORKS AND STORAGE FACILITY SUPERFUND SITE
GENERAL ELECTRIC COMPANY - MILFORD, NEW HAMPSHIRE

	Yes	No
Integrity of 55-gallon drums containing waste materials		
Integrity of storage tanks containing impacted groundwater (or other fluids such as dewatering and decontamination liquids)		
Integrity of roll-offs containing waste materials		
Comments:		

Date: _____

Inspector:_____(Print)

_____(Sign)

TABLE I-4
MAXIMUM DETECTED CONSTITUENT CONCENTRATIONS IN SOIL AND REPORTING GUIDELINES

FLETCHER'S PAINT WORKS AND STORAGE FACILITY SUPERFUND SITE
GENERAL ELECTRIC COMPANY - MILFORD, NEW HAMPSHIRE

Analyte	Maximum Detected Concentration	Result Units
VOCs		
1,1,1-Trichloroethane	0.002	mg/kg
1,2,4 Trichlorobenzene	2.1	mg/kg
1,2-Dichlorobenzene	0.068	mg/kg
1,2-Dichloroethene (total)	0.003	mg/kg
1,3-Dichlorobenzene	0.011	mg/kg
1,4-Dichlorobenzene	0.042	mg/kg
2-Butanone	0.022	mg/kg
2-Hexanone	0.019	mg/kg
4-Methyl-2-pentanone	0.019	mg/kg
Acetone	0.17	mg/kg
Bromoform	0.003	mg/kg
Carbon Disulfide	0.025	mg/kg
Chlorobenzene	0.04	mg/kg
cis-1,2-Dichloroethene	0.02	mg/kg
Ethylbenzene	21	mg/kg
Methyl tert butyl ether	0.004	mg/kg
Methylene Chloride	0.096	mg/kg
Tetrachloroethene	0.067	mg/kg
Toluene	2.5	mg/kg
Trichloroethene	0.75	mg/kg
Xylenes,Total	23	mg/kg
SVOCs		
1,2,4 Trichlorobenzene	69	mg/kg
2,4-Dinitrotoluene	0.46	mg/kg
2-Methylnaphthalene	5.6	mg/kg
4-Nitrophenol	0.86	mg/kg
Acenaphthene	1.1	mg/kg
Acenaphthylene	1.1	mg/kg
Acetophenone	0.5	mg/kg
Anthracene	1.5	mg/kg
Benzaldehyde	0.2	mg/kg
Benzo(a)anthracene	110	mg/kg
Benzo(a)pyrene	91	mg/kg
Benzo(b)fluoranthene	110	mg/kg
Benzo(g,h,i)perylene	14	mg/kg
Benzo(k)fluoranthene	7.2	mg/kg
Biphenyl	0.18	mg/kg
bis(2-Ethylhexyl)phthalate	30	mg/kg
Butyl benzyl phthalate	0.2	mg/kg
Carbazole	1.9	mg/kg
Chrysene	11	mg/kg
Dibenz(a,h)anthracene	1.1	mg/kg
Dibenzofuran	0.79	mg/kg
Diethyl phthalate	1.3	mg/kg
Di-n-Butylphthalate	5.1	mg/kg
Fluoranthene	19	mg/kg
Fluorene	1.4	mg/kg
Indeno(1,2,3-c,d)pyrene	11	mg/kg
Naphthalene	3.1	mg/kg
Phenanthrene	12	mg/kg
Phenol	0.29	mg/kg
Pyrene	23	mg/kg

TABLE I-4
MAXIMUM DETECTED CONSTITUENT CONCENTRATIONS IN SOIL AND REPORTING GUIDELINES

FLETCHER'S PAINT WORKS AND STORAGE FACILITY SUPERFUND SITE
GENERAL ELECTRIC COMPANY - MILFORD, NEW HAMPSHIRE

Analyte	Maximum Detected Concentration	Result Units
Pesticides		
4,4'- DDE	0.084	mg/kg
4,4'- DDT	0.074	mg/kg
4,4'- DDD	0.014	mg/kg
Alpha-Chlordane	0.055	mg/kg
Dieldrin	0.0039	mg/kg
Endosulfan I	0.027	mg/kg
Endosulfan II	0.03	mg/kg
Endosulfan Sulfate	0.0007	mg/kg
Endrin	0.25	mg/kg
Endrin Aldehyde	2	mg/kg
Endrin Ketone	0.0063	mg/kg
Gamma-BHC	0.06	mg/kg
Gamma-Chlordane	0.011	mg/kg
Heptachlor	0.021	mg/kg
PCBs		
Aroclor 1016	5	mg/kg
Aroclor 1221	680	mg/kg
Aroclor 1232	12,000	mg/kg
Aroclor 1242	82,000	mg/kg
Aroclor 1248	19,000	mg/kg
Aroclor 1254	4,100	mg/kg
Aroclor 1260	70	mg/kg
Total PCBs	82,000	mg/kg
Inorganics		
Aluminum	19,600	mg/kg
Antimony	78.5	mg/kg
Arsenic	69.4	mg/kg
Barium	917	mg/kg
Beryllium	1.5	mg/kg
Cadmium	1.5	mg/kg
Calcium	54,200	mg/kg
Chromium	1,170	mg/kg
Cobalt	30	mg/kg
Copper	517	mg/kg
Cyanide	1	mg/kg
Iron	39,500	mg/kg
Lead	1,730	mg/kg
Magnesium	6,480	mg/kg
Manganese	2,750	mg/kg
Mercury	3.4	mg/kg
Nickel	117	mg/kg
Potassium	6,360	mg/kg
Selenium	1.3	mg/kg
Silver	0.93	mg/kg
Sodium	1,730	mg/kg
Thallium	0.74	mg/kg
Titanium	592	mg/kg
Vanadium	47.9	mg/kg
Zinc	1,210	mg/kg

TABLE I-5
MAXIMUM DETECTED CONSTITUENT CONCENTRATIONS IN GROUNDWATER AND REPORTING GUIDELINES

FLETCHER'S PAINT WORKS AND STORAGE FACILITY SUPERFUND SITE
GENERAL ELECTRIC COMPANY - MILFORD, NEW HAMPSHIRE

Analyte	Maximum Detected Concentration	Result Units
VOCs		
1,1-Dichloroethane	0.76	ug/L
1,1-Dichloroethene	0.59	ug/L
1,2,4-Trichlorobenzene	290	ug/L
1,2-Dichlorobenzene	3.7	ug/L
1,2-Dichloroethane	46	ug/L
1,2-Dichloroethene (total)	270	ug/L
1,2-Dichloropropane	1	ug/L
1,3-Dichlorobenzene	14	ug/L
1,4-Dichlorobenzene	39	ug/L
2-Butanone	360	ug/L
4-Methyl-2-pentanone	330	ug/L
Acetone	1,400	ug/L
Benzene	4,400	ug/L
Bromomethane	1.6	ug/L
Carbon Disulfide	1.6	ug/L
Carbon Tetrachloride	0.4	ug/L
Chlorobenzene	50	ug/L
Chloroethane	4.4	ug/L
Chloroform	49	ug/L
Chloromethane	8.8	ug/L
cis-1,2-Dichloroethene	91	ug/L
Cyclohexane	910	ug/L
Ethylbenzene	8,400	ug/L
Isopropylbenzene	130	ug/L
Methyl acetate	23	ug/L
Methyl tert butyl ether	2,500	ug/L
Methylcyclohexane	120	ug/L
Methylene Chloride	400	ug/L
Tetrachloroethene	1.5	ug/L
Toluene	19,000	ug/L
trans-1,2-Dichloroethene	5.3	ug/L
Trichloroethene	5,700	ug/L
Vinyl chloride	4.6	ug/L
Xylenes,Total	55,000	ug/L
SVOCs		
1,2,4 Trichlorobenzene	6,700	ug/L
1,2- Dichlorobenzene	2.1	ug/L
1,3-Dichlorobenzene	7.7	ug/L
1,4- Dichlorobenzene	22	ug/L
2,4,5- Trichlorophenol	0.54	ug/L
2,4-Dimethylphenol	130	ug/L
2-Methylnaphthalene	670	ug/L
2-Methylphenol	34	ug/L
4-Methylphenol	67	ug/L
4-Nitrophenol	2	ug/L
Acenaphthene	32	ug/L
Acetophenone	45	ug/L
Anthracene	2	ug/L
Benzaldehyde	16	ug/L
Benzo(a)anthracene	3	ug/L
Benzo(a)pyrene	24	ug/L
Benzo(b)fluoranthene	66	ug/L
Benzo(g,h,i)perylene	1.4	ug/L
Benzo(k)fluoranthene	8.5	ug/L

TABLE I-5
MAXIMUM DETECTED CONSTITUENT CONCENTRATIONS IN GROUNDWATER AND REPORTING GUIDELINES

FLETCHER'S PAINT WORKS AND STORAGE FACILITY SUPERFUND SITE
GENERAL ELECTRIC COMPANY - MILFORD, NEW HAMPSHIRE

Analyte	Maximum Detected Concentration	Result Units
Biphenyl	7.8	ug/L
bis(2-Ethylhexyl)phthalate	95	ug/L
Butyl benzyl phthalate	30	ug/L
Caprolactam	130	ug/L
Carbazole	4.4	ug/L
Chrysene	2	ug/L
Dibenz(a,h) anthracene	4.8	ug/L
Dibenzofuran	18	ug/L
Diethyl phthalate	300	ug/L
Dimethyl phthalate	0.8	ug/L
Di-n-Butylphthalate	12	ug/L
Di-n-Octylphthalate	3.1	ug/L
Fluoranthene	90	ug/L
Fluorene	59	ug/L
Indeno(1,2,3-c,d)pyrene	4.5	ug/L
Naphthalene	660	ug/L
Pentachlorophenol	7.1	ug/L
Phenanthrene	54	ug/L
Phenol	5,800	ug/L
Pyrene	52	ug/L
Pesticides		
4,4'- DDE	0.23	ug/L
4,4'- DDT	0.027	ug/L
4,4'- DDD	0.022	ug/L
Alpha-BHC	0.0016	ug/L
Alpha-Chlordane	0.017	ug/L
Dieldrin	0.0065	ug/L
Endosulfan I	0.0047	ug/L
Endosulfan II	0.0086	ug/L
Endrin	0.11	ug/L
Endrin Aldehyde	0.11	ug/L
Gamma-BHC	0.0018	ug/L
Methoxychlor	0.015	ug/L
PCBs		
Aroclor 1016	590	ug/L
Aroclor 1221	940	ug/L
Aroclor 1232	1,300	ug/L
Aroclor 1242	22,000,000	ug/L
Aroclor 1248	43	ug/L
Aroclor 1254	2	ug/L
Aroclor 1260	2.3	ug/L
Total PCBs	22,000,000	ug/L
Inorganics		
Aluminum	167,000	ug/L
Antimony	78.5	ug/L
Arsenic	121	ug/L
Barium	1,630	ug/L
Beryllium	13.4	ug/L
Cadmium	33.7	ug/L
Calcium	161,000	ug/L
Chromium	328	ug/L
Cobalt	4,970	ug/L
Copper	981	ug/L
Cyanide	44.2	ug/L

TABLE I-5
MAXIMUM DETECTED CONSTITUENT CONCENTRATIONS IN GROUNDWATER AND REPORTING GUIDELINES

FLETCHER'S PAINT WORKS AND STORAGE FACILITY SUPERFUND SITE
GENERAL ELECTRIC COMPANY - MILFORD, NEW HAMPSHIRE

Analyte	Maximum Detected Concentration	Result Units
Iron	375,000	ug/L
Lead	498	ug/L
Magnesium	29,800	ug/L
Manganese	14,600	ug/L
Mercury	0.52	ug/L
Nickel	128	ug/L
Potassium	26,200	ug/L
Selenium	1.8	ug/L
Silver	2.1	ug/L
Sodium	515,000	ug/L
Thallium	26	ug/L
Titanium	1,440	ug/L
Vanadium	232	ug/L
Zinc	3,800	ug/L

TABLE I-6
MAXIMUM DETECTED CONSTITUENT CONCENTRATIONS IN DNAPL

FLETCHER'S PAINT WORKS AND STORAGE FACILITY SUPERFUND SITE
GENERAL ELECTRIC COMPANY - MILFORD, NEW HAMPSHIRE

Analyte	Maximum Detected Concentration	Result Units
VOCs		
1,2,4 Trichlorobenzene	1,800	mg/kg
1,2-Dichlorobenzene	5.30	mg/kg
1,3-Dichlorobenzene	10	mg/kg
1,4-Dichlorobenzene	31	mg/kg
cis-1,2-Dichloroethene	0.042	mg/kg
Trichloroethene	190	mg/kg
SVOCs		
Acenaphthene	480	mg/kg
Anthracene	11	mg/kg
Benzo(a)anthracene	46	mg/kg
Benzo(a)pyrene	38	mg/kg
Benzo(b)fluoranthene	49	mg/kg
Benzo(g,h,i)perylene	16	mg/kg
Benzo(k)fluoranthene	23	mg/kg
Biphenyl	1,600	mg/kg
Chrysene	40	mg/kg
Fluoranthene	78	mg/kg
Indeno(1,2,3-c,d)pyrene	13	mg/kg
Phenanthrene	34	mg/kg
Pyrene	77	mg/kg
PCBs		
Aroclor 1242	3,800,000	mg/kg
Aroclor 1248	68,000	mg/kg
Total PCBs	3,800,000	mg/kg

TABLE I-7
FEDERAL, STATE AND LOCAL EMERGENCY RESPONSE AGENCIES

FLETCHER'S PAINT WORKS AND STORAGE FACILITY SUPERFUND SITE
GENERAL ELECTRIC COMPANY - MILFORD, NEW HAMPSHIRE

Elm Street Site (39 Elm Street) ID: NHD001079649
Mill Street Site (Corner of Mill and Cottage Street) ID: NHD510172224

Agency/Phone Listing	Phone Number
Emergency	911
Ambulance	603.673.1414
Fire Department	603.673.1414
Police Department	603.673.1414
Milford Medical Center of St. Joseph Hospital	603.673.5623
Poison Control Center	1.800.222.1222
NHDES Emergency Response - Hazardous Materials/Waste Spills (Mon – Fri 0800-1600)	603.271.3899
NHDES Emergency Response - Petroleum Spills (Mon – Fri 0800-1600)	603.271.3644
New Hampshire State Police (Emergency Response Weekends and Evenings)	603.271.3636
USCG – National Response Center	1.800.424.8802
CHEMTREC – Chemical Emergencies (spills, fires, exposure)	1.800.424.9300
USEPA Remedial Project Manager – Cheryl Sprague	617.918.1244
USEPA Alternate Remedial Project Manager – Mike Jasinski	617.918.1352
Emergency Response Unit, EPA Region 1	617.223.7265

TABLE I-8
EMERGENCY CONTACTS

FLETCHER'S PAINT WORKS AND STORAGE FACILITY SUPERFUND SITE
GENERAL ELECTRIC COMPANY - MILFORD, NEW HAMPSHIRE

Emergency Coordinator	**Phone Listing**
Leanne Miner, ARCADIS	Office: (978) 937-9999, ext 322
Home Address:	Fax: (978) 937-7555
63 South Road	Work Mobile:
Fremont, NH 03044	(413) 441-9262
	Personal Mobile:
Work Address:	(781) 248-5089
1 Executive Drive	
Suite 303	
Chelmsford, MA 01824	

Secondary Emergency Coordinator

Diane Champagne, ARCADIS	Office: (978) 937-9999, ext 340
Home Address:	Fax: (978) 937-7555
4 Berry Lane	Work Mobile:
Acton, MA 01720	(978) 505-1120
	Home Phone:
Work Address:	(978) 263-3439
1 Executive Drive	
Suite 303	
Chelmsford, MA 01824	

Alternate Emergency Coordinator

Suzanne Ellsworth, ARCADIS	Office: (315) 671-9147
Home Address:	Fax: (315) 445-9161
8037 Candela Lane	Personal Mobile:
Clay, NY 13041	(315) 569-1663
Work Address:	
6723 Towpath Road	
Syracuse, NY 13214-0066	

TABLE I-8
EMERGENCY CONTACTS

FLETCHER'S PAINT WORKS AND STORAGE FACILITY SUPERFUND SITE
GENERAL ELECTRIC COMPANY - MILFORD, NEW HAMPSHIRE

Emergency Response Subcontractor

Global Remediation Services, Inc.	Office:	(508) 828-1005
700 Richmond Street	Fax:	(508) 824-2486
Taunton, MA 02718		

Contractor Emergency Coordinator (TBD)	Office:	TBD
	Fax:	TBD

Figures

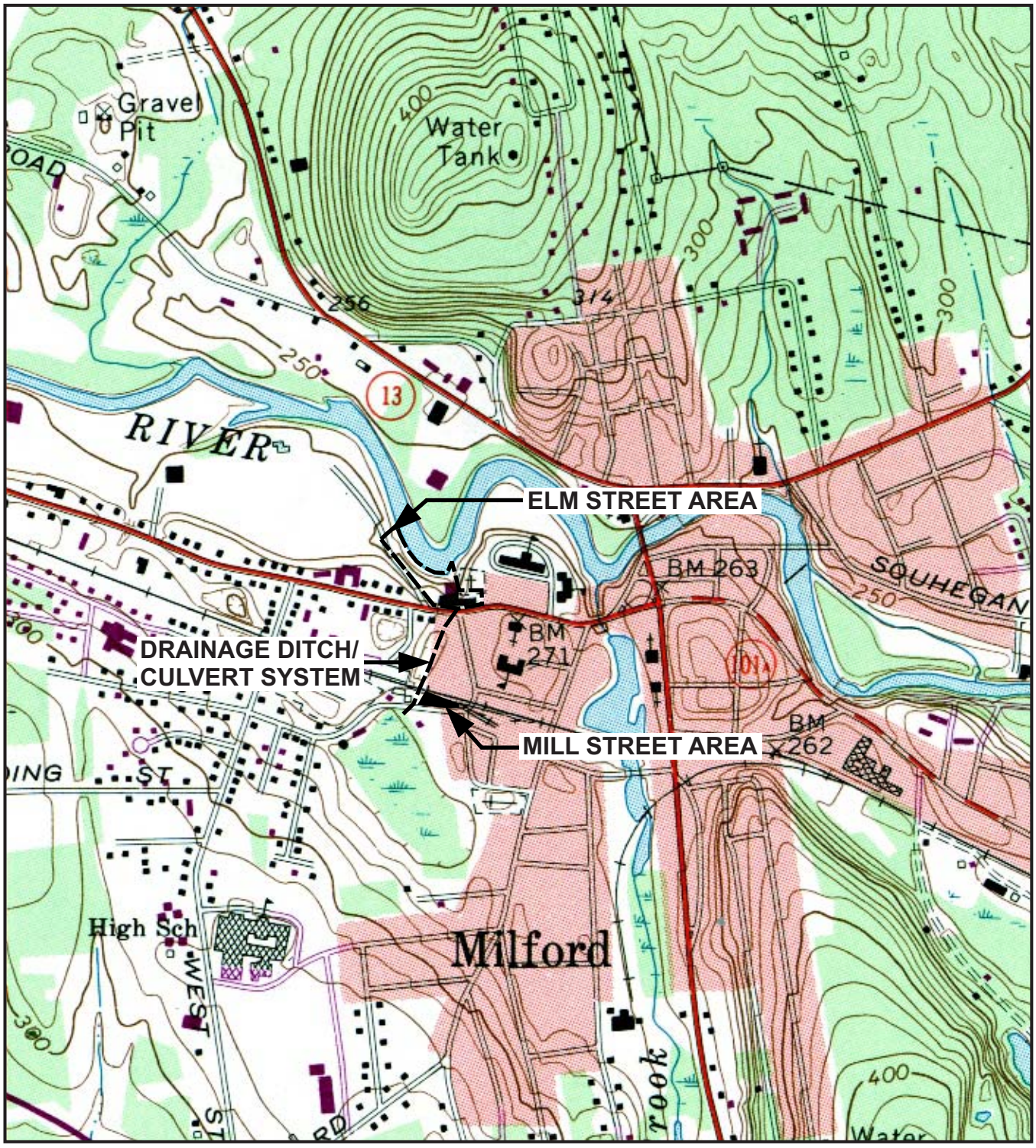

REFERENCE: Base Map Source USGS 7.5 Minute Quads. Series Milford, New Hampshire, Photorevised 1985.

1000' 0 1000'

Approximate Scale: 1" = 1000'

DRAFT
FOR EPA REVIEW

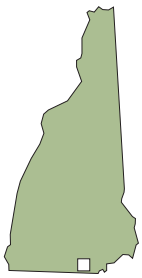

AREA LOCATION

GENERAL ELECTRIC COMPANY
FLETCHER'S PAINT WORKS AND STORAGE FACILITY
SUPERFUND SITE - MILFORD, NEW HAMPSHIRE
FINAL (100%) DESIGN REPORT

SITE LOCATION MAP

ARCADIS

FIGURE
I-1

11/08/2012 SYRACUSE-141ENV-DJHOWES, K.SARTORI
C:B0020985/0002/00006/REPORT/CDR/20985N01.CDR

LEGEND:

- FENCE
- WATER
- RAILROAD
- PROPERTY LINES
- SITE
- LOCATION OF COMMUNICATIONS SYSTEM AND ADDTIONAL SUPPLIES

NOTES:

1. BASE MAP FEATURES (PROPERTY LINES, ROADS, AND RAILROAD) BASED ON TAX MAP NUMBER 25 FROM MERIDIAN LAND SERVICES, INC. DATED APRIL 1999.
2. BASE MAP FEATURES (BUILDINGS, RIVER, AND WELL LOCATIONS) BASED ON PLATE 1 AND PLATE 2 FROM THE REMEDIAL INVESTIGATION REPORT (ARTHUR D. LITTLE, 1994).

0 150' 300'
GRAPHIC SCALE

DRAFT
FOR EPA REVIEW

GENERAL ELECTRIC COMPANY
FLETCHER'S PAINT WORKS AND STORAGE FACILITY
SUPERFUND SITE - MILFORD, NEW HAMPSHIRE
FINAL (100%) DESIGN REPORT

SITE MAP

ARCADIS

FIGURE
I-2

CITY: SYRACUSE, NY DIV/GROUP: ENVCAD DB: P. LISTER A. SCHILLING L. FORAKER K. SARTORI PIC: P. KEANEY PM: A. CORBIN TM: A. CORBIN LYR: ON=*; OFF=*REF* PAGESETUP: ---PLOTSTYLETABLE: PLTFULL.CTB PLOTTED: 11/21/2012 1:14 PM BY: SARTORI, KATHERINE
VIEW: C:\DATA\SYRACUSE\ACTIVE\30089800\0000\8\DWG\REPORT\FINAL\20985002.DWG LAYOUT: 12 SAVED: 11/21/2012 1:14 PM ACADVER: 18.1S (LMS TECH) PAGESETUP: ---
XREFS: IMAGES: PROJECTNAME: ---
20985X00

LEGEND:

- APPROXIMATE PROPERTY LINE
- UNDERGROUND STORAGE TANK
- EDGE OF WATER
- WATER
- 265 SURFACE ELEVATION CONTOUR
- BUILDING
- EXISTING CHAIN LINK FENCE
- NEW (OR RELOCATED) TEMPORARY CHAIN LINK FENCE
- 6' TALL ORANGE SAFETY FENCE
- SITE
- LOCATION OF COMMUNICATIONS SYSTEM, FIRE-FIGHTING EQUIPMENT, SPILL CONTROL EQUIPMENT, AND PERSONAL PROTECTIVE EQUIPMENT
- VEHICLE EMERGENCY EXIT
- EMERGENCY EXIT – PERSON GATE
- EVACUATION ASSEMBLY AREA
- EVACUATION ROUTE

NOTES:

1. BASE MAP SCANNED FROM PHOTOCOPY OF GEOSYNTEC CONSULTANTS DRAWING ENTITLED "ELM STREET PROPERTY – PLAN VIEW", DATED APRIL 1999 AND FROM SURVEY PROVIDED BY THE CLIENT.
2. GAS STATION WELLS IN THE FORMER GULF STATION AREA WERE DIGITIZED FROM A PHOTOCOPY OF A DRAWING BY SAIC, DATED 03/01/06, FIGURE NO. 2, @ AN APPROXIMATE SCALE OF 1" = 20'. GAS STATION WELLS IN THE MOBIL STATION AREA WERE DIGITIZED FROM A PHOTOCOPY OF A DRAWING BY JGI, DATED OCTOBER 2005, FIGURE NO. 3, @ A SCALE OF 1" = 20'.
3. MEASURABLE FREE PRODUCT WAS DETECTED AT MOBIL-02R DURING THE SEPTEMBER/OCTOBER 2009 EVENT. THEREFORE, AS PROPOSED BY GE AND APPROVED BY EPA IN ITS APRIL 23, 2009 ELECTRONIC MAIL MESSAGE, NO SAMPLE WAS COLLECTED FROM THIS WELL.

0 40' 80'
GRAPHIC SCALE

DRAFT
FOR EPA REVIEW

GENERAL ELECTRIC COMPANY
FLETCHER'S PAINT WORKS AND STORAGE FACILITY
SUPERFUND SITE - MILFORD, NEW HAMPSHIRE
FINAL (100%) DESIGN REPORT

ELM STREET AREA - EMERGENCY RESPONSE PLAN

ARCADIS

FIGURE
I-2A

CITY: SYRACUSE DIV/GROUP: ENV/CAD DB: P. LISTER A. SCHILLING L: FORAKER LD: PIC: P. KEANEY PM: A. CORBIN TM: A. CORBIN LYR: ON=*;OFF=*REF*
VIEW: C:\DISTRACUSE\ACTIONS\08\0000\08\DWG\REPORT\FINAL\02\08\01A.DWG IAYOUT: V2A SAVED: 11/21/2012 1:12 PM ACADVER: 18.1S (LMS TECH) PAGESETUP: ---- PLOTSTYLETABLE: PLTFULL.CTB PLOTTED: 11/21/2012 1:12 PM BY: SARTORI, KATHERINE
XREFS: 20085X05 20085X00 IMAGES: PROJECTNAME: ----

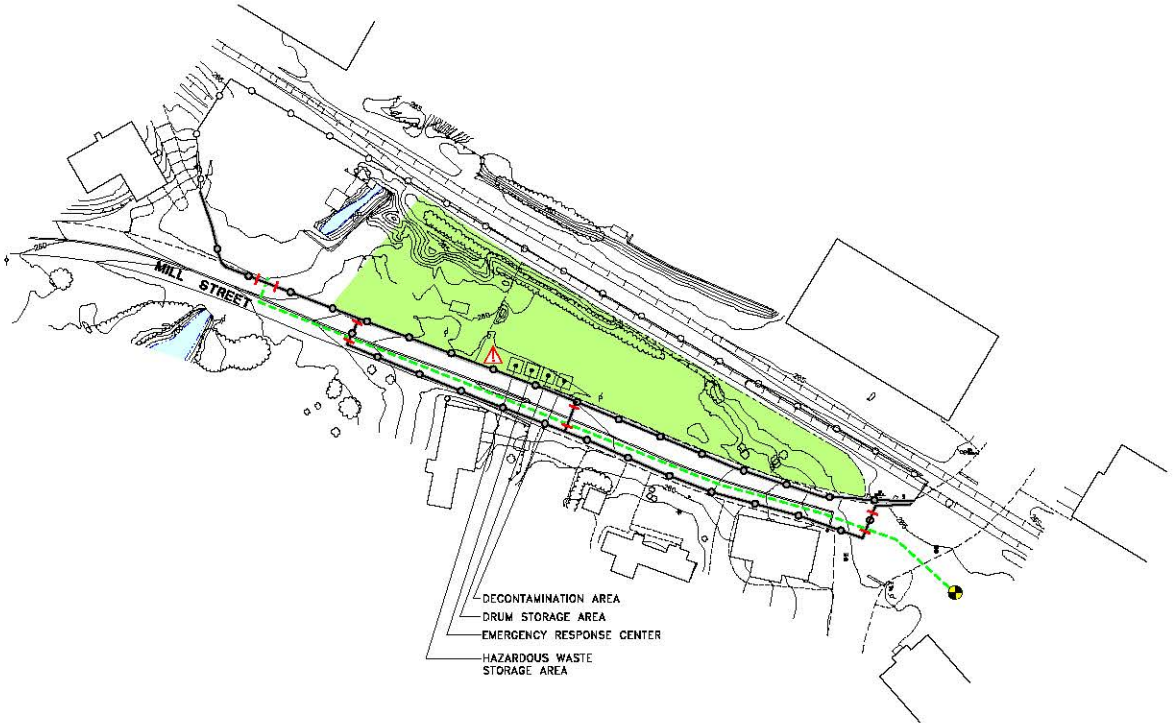

LEGEND:

- APPROXIMATE PROPERTY LINE
- EDGE OF WATER
- WATER
- 265 SURFACE ELEVATION CONTOUR
- BUILDING
- PROPOSED JERSEY WALL BARRIER WITH CHAIN LINK FENCE (GATES WHERE NEEDED)
- PROPOSED NEW (OR RELOCATED) TEMPORARY FENCING
- SITE
- LOCATION OF COMMUNICATIONS SYSTEM, FIRE-FIGHTING EQUIPMENT, SPILL CONTROL EQUIPMENT, AND PERSONAL PROTECTIVE EQUIPMENT
- EMERGENCY EXIT
- EVACUATION ASSEMBLY AREA
- EVACUATION ROUTE

NOTE:

BASE MAP SCANNED FROM PHOTOCOPY OF GEOSYNTEC CONSULTANTS DRAWING ENTITLED "MILL STREET PROPERTY – PLAN VIEW", DATED APRIL 1999 AND FROM SURVEY PROVIDED BY THE CLIENT.

0 40' 80'
GRAPHIC SCALE

DRAFT
FOR EPA REVIEW

GENERAL ELECTRIC COMPANY
FLETCHER'S PAINT WORKS AND STORAGE FACILITY
SUPERFUND SITE - MILFORD, NEW HAMPSHIRE
FINAL (100%) DESIGN REPORT

MILL STREET AREA -
EMERGENCY RESPONSE PLAN

ARCADIS

FIGURE
I-2B

CITY: SYRACUSE DIVGROUP: ENVCAD DB: P. LISTER A. SCHILLING L: FORAKER LD: PIC: P. KEANEY PM: A. CORBIN TM: A. CORBIN LYR: ON=*;OFF=*REF*
VIEW: C:\DATA\ACUSE\ACTIONS\SBMS\DOCS\DWG\REPORT\FINAL\20985035.DWG TAX\DIT VB SAVED: 11/21/2012 1:11 PM A-DOVER 18.15 (LMSTECH) PAGESETUP: --- DISTIVETABLE: PLTFILL.CTB PLOTTED: 11/21/2012 1:12 PM BY: SARTORI, KATHERINE
XREFS: 20985X05 20985X06 20985X00 IMAGES: PROJECTNAME: ---

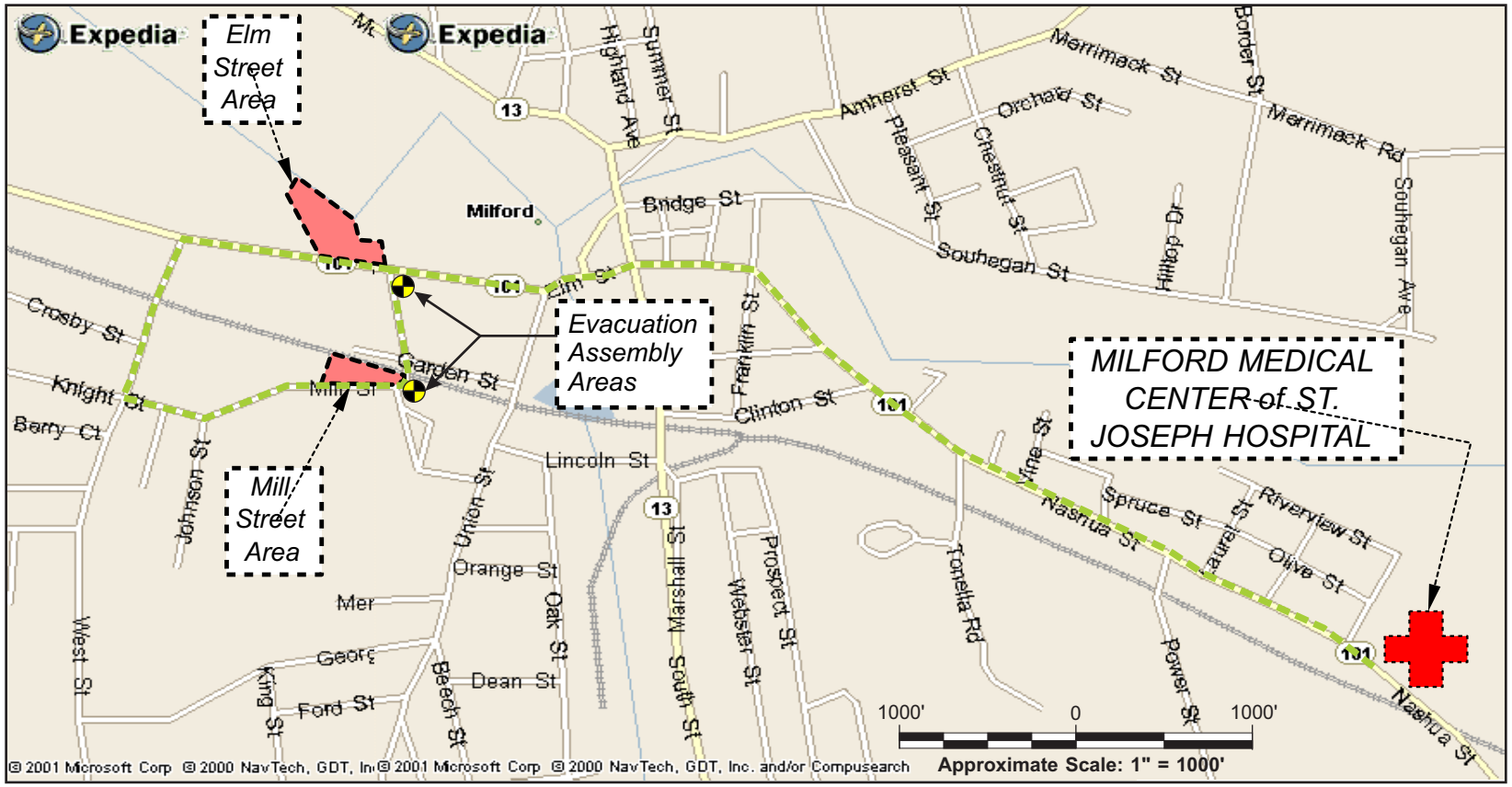

EAST FROM MILL STREET AREA

Turn LEFT onto MILL STREET and proceed east to COTTAGE STREET.

Turn LEFT onto COTTAGE STREET and proceed north to ELM STREET (*ROUTE* 101A).

Turn RIGHT onto ELM STREET (*ROUTE* 101A) and proceed east to *ROUTE* 13.

Go STRAIGHT at *ROUTE* 13 *REMAINING on ROUTE 101A onto* NASHUA STREET.

Remain on NASHUA STREET *(ROUTE 101A) to MILFORD EMERGENCY MEDICAL CENTER of ST. JOSEPH HOSPITAL.*

WEST FROM MILL STREET AREA

Turn RIGHT onto MILL STREET and proceed west to WEST STREET.

Turn RIGHT onto WEST STREET and proceed North to ELM STREET (ROUTE 101A).

Turn RIGHT onto ELM STREET (*ROUTE* 101A) and proceed east to *ROUTE* 13.

Go STRAIGHT at ROUTE 13 REMAINING on ROUTE 101A onto NASHUA STREET.

Remain on NASHUA STREET (ROUTE 101A) to MILFORD EMERGENCY MEDICAL of ST. JOSEPH HOSPITAL.

FROM ELM STREET AREA

Turn LEFT *onto* ELM STREET *(ROUTE 101A) and proceed east to ROUTE 13.*

Go STRAIGHT *at ROUTE* 13 *REMAINING on ROUTE 101A onto* NASHUA STREET.

Remain on NASHUA STREET *(ROUTE 101A) to MILFORD EMERGENCY MEDICAL CENTER of ST. JOSEPH HOSPITAL.*

DRAFT FOR EPA REVIEW

GENERAL ELECTRIC COMPANY
FLETCHER'S PAINT WORKS AND STORAGE FACILITY
SUPERFUND SITE - MILFORD, NEW HAMPSHIRE
FINAL (100%) DESIGN REPORT

EVACUATION ASSEMBLY LOCATIONS AND HOSPITAL ROUTE MAP

ARCADIS

FIGURE
I-3

Attachments

Attachment A

Emergency Response Report Form

Fletcher's Paint Works and Storage Facility Superfund Site
Milford, New Hampshire

Attachment A

Emergency Response Report Form

1. Time Incident Discovered _____ Date_____

2. Time Incident Was Mitigated_____ Date_____

3. Approximate Location and Type of Accident (i.e., Fire, Explosion, Spill)

_____

_____

4. Material Spilled (If Any) _____

Approximate Amount _____

5. Extent of Injuries (If Any) _____

_____

6. Damage to People or the Environment (If Any) _____

_____

_____

7. Estimated Amount of Material Recovered (If Any) _____

_____

8. Disposition of Recovered Material (If Any) _____

_____

9. Action Taken to Control the Incident and Prevent Further Problems

_____

_____

_____

Signature _____

Date _____

Attachment B

Spill Report Form

Fletcher's Paint Works and Storage Facility Superfund Site
Milford, New Hampshire

Attachment B

Spill Report Form

1. Time Spill Discovered: _____ Date: _____

2. Individual Who Discovered Spill: _____

3. Time Spill Was Mitigated: _____ Date: _____

4. Approximate Location and Type of Spill Accident:
_____
_____

5. Material Spilled: _____

   Approximate Amount: _____

6. Extent of Injuries (If Any): _____
_____

7. Damage to People or the Environment (If Any):
_____
_____
_____

8. Estimated Amount of Material Recovered:
_____
_____

9. Disposition of Recovered Material:
_____
_____

10. Action Taken to Control the Incident and Prevent Further Problems:
_____
_____
_____

11. Agency Notifications (Who/When): _____

    Signature _____

    Date _____