Superfund Records Center
SITE: Centredale
BREAK: 2-2
OTHER: 462809

*Project-Specific Quality Assurance Project Plan*
*Time-Critical Removal Action*
*Shallow Groundwater Remedy-Groundwater Action Area*

# Centredale Manor Restoration Project Superfund Site
# North Providence, Rhode Island

SDMS DocID 462809

November 2009

Prepared for

**EMHART INDUSTRIES, INC.**
**c/o SULLIVAN & WORCESTER, LLP**
1666 K Street, NW
Washington, DC 20006

Prepared by

Loureiro Engineering Associates, Inc.
100 Northwest Drive
Plainville, Connecticut 06062
*An Employee Owned Company*

LEA Comm. No. 15RP901.001

# PROJECT-SPECIFIC QUALITY ASSURANCE PROJECT PLAN
# TIME-CRITICL REMOVAL ACTION
# SHALLOW GROUNDWATER REMEDY - GROUNDWATER ACTION AREA
## Centredale Manor Restoration Project Superfund Site
## North Providence, Rhode Island

**November 18, 2009**

**Prepared for**

**EMHART INDUSTRIES, INC.**
**c/o SULLIVAN & WORCESTER, LLP**
**1666 K Street, NW**
**Washington, DC 20006**

**Prepared by**

**LOUREIRO ENGINEERING ASSOCIATES, INC.**
**100 Northwest Drive**
**Plainville, Connecticut 06062**

***An Employee Owned Company***

**Comm. No. 15RP901.001**

# 1. PROJECT MANAGEMENT AND OBJECTIVES

## 1.1 Title and Approval Page

**QAPP Worksheet #1 / (UFP-QAPP Manual Section 2.1)**

**Site Name/Project Name:** **Centredale Manor Restoration Project Superfund Site**
**Site Location:** **2072/2074 Smith Street, North Providence, Rhode Island**

Quality Assurance Project Plan
Document Title

Emhart Industries, Inc.
Lead Organization

Jefferson R. Berdeen, CHMM, Loureiro Engineering Associates, Inc. (LEA)
Preparer's Name and Organizational Affiliation

10 Twin Bridge Road, Unit 1A, Merrimack, NH 03054 / 603.423.0025 / jrberdeen@loureiro.com
Preparer's Address, Telephone Number, and E-mail Address

29 July 2009
Preparation Date (Day/Month/Year)

Investigative Organization's Project Manager: _____
Signature

David N. Scotti /LEA/
Printed Name/Organization/Date

Investigative Organization's Project QA Officer: _____
Signature

Nick Skoularikis, PhD, LEP /LEA./
Printed Name/Organization/Date

Lead Organization's Project Manager: _____
Signature

Jerome C. Muys/ Sullivan & Worcester, LLP /
Printed Name/Organization/Date

Approval Signatures: _____
Signature

_____
Printed Name/Title/Date

_____
Approval Authority

Other Approval Signatures: _____
Signature

_____
Printed Name/Title/Date

Document Control Number: NA

## 1.2 Document Format and Table of Contents

### 1.2.1 Document Control Format

The document control format is used to indicate the most current version of this Quality Assurance Project Plan (QAPP). The format will be found in the upper right-hand corner of the QAPP starting with the Title and Approval Page and including the Table of Contents and Appendices.

The document control format will consist of the abbreviated title of the document (QAPP) on the first line. The second line will contain the revision number of this document (DRAFT, 01, 02, etc.). The third line will contain the date of the current revision. The final line will give the page number in relation to total number of pages. Each revision of this QAPP will be differentiated with a new revision number and date.

### 1.2.2 Document Control Numbering System

Due to the limited number of individuals receiving this document, a document control numbering system will not be instituted for this QAPP. To ensure that the most recent document is in place, all individuals on the distribution list will be notified via e-mail correspondence as to any revision and/or addendum to this QAPP. In addition, an electronic copy of the revision/addendum will be forwarded as an attachment to the e-mail correspondence for reference until a hard copy is submitted.

### 1.2.3 Table of Contents

| | | Page |
|---|---|---|
| **1.** | **PROJECT MANAGEMENT AND OBJECTIVES** | **1** |
| 1.1 | Title and Approval Page | 1 |
| 1.2 | Document Format and Table of Contents | 2 |
| 1.2.1 | Document Control Format | 2 |
| 1.2.2 | Document Control Numbering System | 2 |
| 1.2.3 | Table of Contents | 2 |
| 1.2.4 | QAPP Identifying Information | 6 |
| 1.3 | Distribution List and Personnel Sign-Off Sheet | 6 |
| 1.4 | Project Organization | 6 |
| 1.4.1 | Project Task Organization | 6 |
| 1.4.2 | Communication Pathways | 7 |

1.4.3 Roles and Responsibilities 7
1.4.4 Special Training Requirements/Certification 10
1.5 Project Planning/Problem Definition 11
1.5.1 Project Planning Meetings 11
1.5.2 Problem Definition Background 11
1.6 Project Quality Objectives and Measurement Performance Criteria 13
1.6.1 Project Quality Objectives 13
1.6.2 Measurement Performance Criteria 13
1.7 Secondary Data Evaluation 17
1.8 Project/Task Description and Schedule 17
1.8.1 Project Overview 17
1.8.2 Project Schedule 17

**2. MEASUREMENT/DATA ACQUISITION 18**

2.1 Overview 18
2.2 Sampling Tasks 18
2.2.1 Sampling Process Design and Rationale 18
2.2.2 Sampling Collection Procedure 20
2.3 Analytical Tasks 23
2.3.1 Analytical SOPs 23
2.3.2 Analytical Instrument Calibration Procedures 24
2.3.3 Analytical Instrument Maintenance, Testing, and Inspection Procedures 24
2.3.4 Analytical Supply Inspection and Acceptance Procedures 24
2.4 Sample Collection Documentation, Tracking and Custody Procedures 24
2.4.1 Sample Collection Documentation 24
2.4.2 Sample Handling and Tracking System 25
2.4.3 Quality Control Requirements 29
2.5 Documentation, Records, and Data Management 32
2.5.1 Overview 32
2.5.2 Project Documentation and Records 32
2.5.3 Laboratory Data Package Deliverables 33
2.5.4 Data Reporting Formats 34
2.5.5 Data Handling and Management 34
2.5.6 Data Tracking and Control 34
2.6 Field Data Reduction 34
2.6.1 Overview 34
2.6.2 Daily Field Report Forms 34
2.6.3 Chain-Of-Custody Record and Custody Seal 35
2.6.4 Field Modification Record 35
2.7 Analytical Data Report Format 36
2.7.1 Data Recording 36
2.7.2 Data Validation 36
2.7.3 Data Transmittal 36

**3. ASSESSMENT/OVERSIGHT 37**

3.1 Assessments and Response Actions 37
3.2 Planned Assessments 38
3.2.1 Readiness Reviews 38
3.2.2 Surveillance 38
3.2.3 Field Sampling Technical System Audit 38
3.2.4 Performance Audits 38
3.2.5 Internal System Audits 38
3.2.6 Laboratory Technical System Audits 39
3.2.7 Performance Evaluation Audit 39
3.2.8 Audit of Data Quality 40
3.3 Assessment Findings and Corrective Action Responses 40
3.4 Additional QAPP Non-Conformances 40
3.5 Quality Assurance Management Reports 40
3.6 Completion of Work Report 41

**4. DATA REVIEW 41**

4.1 Overview 41
4.2 Data Review Steps 42
4.2.1 Step I: Data Verification 42
4.2.2 Step II: Data Validation 43
4.2.3 Usability Assessment 45

**5. STREAMLINING DATA REVIEW 45**

**REFERENCES**

**DRAWINGS**

Drawing 1 Shallow Groundwater Remedy Groundwater Action Area Site Plan

**APPENDICES**

Appendix A Select UFP-QAPP Worksheets
Appendix B Loureiro Engineering Associates, Inc. Standard Operating Procedures
Appendix C TestAmerica-West Sacramento SOPs and Method 8290A Summary
Appendix D Example Chain of Custody Documents, Labels, Custody Seals, and Field Forms

## ACRONYMS

| | |
|---|---|
| COC | Chain-of-Custody |
| CFR | Code of Federal Regulations |
| CSM | Conceptual Site Model |
| CSTAG | Contaminated Sediments Advisory Group |
| CWR | Completion of Work Report |
| DQ | Director of Quality |
| DQOs | Data Quality Objectives |
| ESI | Environmental Standards, Inc. |
| FMR | Field Modification Record |
| GC/MS | Gas Chromatograph/Mass Spectrometry |
| HAZWOPER | Hazardous Waste Operations and Emergency Response |
| LCI | Loureiro Contractors, Inc. |
| LCS | Laboratory Control Sample |
| LEA | Loureiro Engineering Associates, Inc. |
| LIMS | Laboratory Information Management System |
| MDL | Method Detection Limit |
| MS | Matrix Spike |
| MSD | Matrix Spike Duplicate |
| NPL | National Priorities List |
| NTCRA | Non-Time Critical Removal Action |
| NTUs | Nephalometric Turbidity Units |
| OSHA | Office of Safety and Health Administration |
| PALs | Performance Acceptance Limits |
| PARCCS | Precision, Accuracy, Representativeness, Completeness, Comparability, and Sensitivity |
| PCDDs | Polychlorinated Dibenzo-*p*-dioxins |
| PCDFs | Polychlorinated Dibenzofurans |
| PRPs | Potentially Responsible Parties |
| QA | Quality Assurance |
| QC | Quality Control |
| QA/QC | Quality Assurance/Quality Control |
| QAM | Quality Assurance Manager |
| QAPP | Quality Assurance Project Plan |
| QL | Quantitation Limit |
| RIDEM | Rhode Island Department of Environmental Management |
| RPD | Relative Percent Difference |
| SOP | Standard Operating Procedure |
| TCRA | Time-Critical Removal Action |
| TSA | Technical System Audit |
| UAO | Unilateral Administrative Order |
| UFP | Uniform Federal Policy |
| USDOL | United States Department of Labor |

| | |
|---|---|
| USDOT | United States Department of Transportation |
| USEPA | United States Environmental Protection Agency |
| WP | Work Plan |

**UNITS**

| | |
|---|---|
| °C | degrees centigrade |
| µ | microns |
| ml/min | milliliters per minute |
| % | percent |
| pg/l | picograms per liter |

1.2.4 QAPP Identifying Information

This QAPP has been prepared in accordance with guidance provided in the *Uniform Federal Policy for Quality Assurance Project Plans* (USEPA, July 2004). The QAPP identifying information is presented in QAPP Worksheet 2 included in Appendix A of this QAPP.

## 1.3 Distribution List and Personnel Sign-Off Sheet

A list of key project personnel who will receive an approved QAPP, are presented on Uniform Federal Policy (UFP) QAPP Worksheet 3 found in Appendix A of this QAPP. Also, these individuals will receive any revisions, addenda, and/or amendments to this QAPP.

A project personnel sign-off sheet is included as UFP-QAPP Worksheet 4 in Appendix A. A copy of this form must be signed by the project personnel from each organization to indicate that they have read the QAPP and will implement the QAPP as prescribed. Each organization will keep the original signed sheets in their organization's project files and forward copies of the signed sheets to Loureiro Engineering Associates, Inc. (LEA) to be placed in the central project file.

## 1.4 Project Organization

1.4.1 Project Task Organization

The project will require integration of personnel from the organizations identified below that comprise the project team. An organization chart is included as QAPP Worksheet 5 in Appendix

A. A detailed description of the responsibilities of each member of the project team is presented below.

1.4.2 Communication Pathways

The LEA Project Manager will be the central liaison for communications during the activities implemented in accordance with this QAPP. All field sampling data and information and laboratory analytical results will be reported to the LEA Project Manager. Any required reporting to regulatory agencies will be provided by the LEA Project Manager. In the event that a real-time modification is necessary to this QAPP to ensure that project goals are met, the Project Manager will coordinate with the appropriate regulatory agencies and project quality assurance (QA) personnel to make the necessary changes.

1.4.3 Roles and Responsibilities

1.4.3.1 Emhart Industries, Inc.

The Emhart Project Manager responsibilities and duties include overall direction of the Work Plan (WP), including:

- Directing LEA;
- Reviewing LEA work products, including data, memoranda, letters, reports, and all documents transmitted to the United Stated Environmental Protection Agency (USEPA) and the Rhode Island Department of Environmental Management (RIDEM); and
- Assuring corrective actions are taken for deficiencies cited during audits of sampling/analytical activities.

Sullivan & Worcester LLP, on behalf of Emhart, will provide project direction and oversight.

1.4.3.2 Loureiro Engineering Associates, Inc.

LEA, on behalf of Emhart Industries, Inc. (Emhart), has overall responsibility for the project at the site. LEA will perform post-removal action groundwater monitoring associated with the shallow groundwater remedy implemented for the Groundwater Action Area. In addition, LEA will be responsible for evaluating resultant sampling data and preparing required data submittals. LEA's responsibilities and duties include:

- Oversight of removal action activities and products; and

- Coordinating with Emhart, USEPA and RIDEM.

LEA Project Manager

The LEA Project Manager's responsibilities include management and coordination of all aspects of the project as defined in the WP with an emphasis on adhering to the objectives of the WP and coordinating office and field activities with Emhart.

LEA Task Manager

LEA Task Managers (Project Engineers/Geologists/Scientists) will manage the ongoing sampling and analysis activities associated with the WP. Responsibilities and duties of each Task Manager include:

- Manage day-to-day sampling activities;
- Develop, establish, and maintain files on sampling activities;
- Assure corrective actions are taken for deficiencies cited during sampling activities;
- Overall Quality Assurance/Quality Control (QA/QC) of the project activities;
- Review all field records and logs;
- Instruct personnel working on sampling activities;
- Coordinate field and laboratory schedules pertaining to sampling activities;
- Ensure, in coordination with the Quality Assurance Manager (QAM), the preparation of QA/QC samples, including performance evaluation samples;
- Request sample bottles from the laboratory;
- Review records of field instrument maintenance and calibration to meet quality objectives;
- Prepare sections of reports pertaining to relevant WP activities; and
- Maintain field and laboratory files of field forms and logs, data reductions, and calculations.

LEA Field Sampling Personnel

The field-sampling personnel's responsibilities and duties include:

- Prepare sample labels and field paperwork;
- Perform field procedures associated with collecting samples;
- Perform field analyses and collect QA samples;

- Calibrate, operate, and maintain field instruments and equipment;
- Reduce field data;
- Maintain sample custody; and
- Complete field records and logs and provide copies to the LEA Task Manager.

LEA Director of Quality

The Director of Quality's (DQ's) responsibilities and duties include:

- Reviewing laboratory data packages;
- Coordinating field QA/QC activities with task managers, including audits of sampling activities, concentrating on field analytical measurements and practices to meet data quality objectives (DQOs);
- Reviewing audit reports; and
- Preparing interim QA/QC compliance reports.

The DQ will be independent of the unit generating the data.

1.4.3.3 Test America, West Sacramento, California

TestAmerica-West Sacramento of West Sacramento, California (TestAmerica) has been selected as the analytical laboratory for this project. TestAmerica will be performing dioxin analysis for the project. TestAmerica's general responsibilities and duties include:

- Performing sample analyses and associated laboratory QA/QC procedures;
- Supplying sample containers, shipping packages, and preservatives;
- Maintaining laboratory custody of samples; and
- Providing strict adherence to all protocols in this QAPP.

Laboratory Project Manager

The Laboratory Project Manager's responsibilities and duties include:

- Serving as primary communication link between LEA and the laboratory technical staff;
- Monitoring work loads and ensuring availability of resources;
- Overseeing the preparation of analytical reports;
- Providing data validation packages as requested, and
- Supervising in-house chain-of-custody (COC).

Laboratory Quality Assurance Manager

The Laboratory Quality Assurance Manager's (QAM's) responsibilities and duties include:

- Supervising the group which reviews and inspects all project-related laboratory activities; and,
- Conducting audits of all laboratory activities.

Laboratory Sample Custodian

The Laboratory Sample Custodian's responsibilities and duties include:

- Receiving all samples; and,
- Maintaining custody of the samples and all corresponding documentation.

Laboratory Data Reviewer

The Laboratory Data Reviewer's responsibilities and duties include verification of the final analytical data prior to transmittal to LEA.

1.4.3.4 Environmental Standards, Inc.

Environmental Standards, Inc. (ESI) has been selected to provide data validation for the project. The data validation will be performed in accordance with *Data Validation Standard Operating Procedure for Polychlorinated Dibenzodioxins and Polychlorinated Dibenzofurans Analysis By High Resolution Gas Chromatography/High Resolution Mass Spectrometry* (USEPA, November 2008). ESI's responsibilities include:

- Evaluating laboratory analytical data generated in accordance with the above-referenced procedure;
- Qualifying analytical data based on field activities and analytical laboratory QC results;
- Providing a summary of the outcome of the data validation with respect to the measurement performance criteria specified in this QAPP, including a summary of the qualified data and an explanation of all data qualifiers.

1.4.4 Special Training Requirements/Certification

To comply with United States Department of Labor (USDOL) Occupational Safety and Health Administration (OSHA) requirements, all LEA employees and specified subcontractor personnel working on-site will have completed a 40-hour health and safety training course as mandated by Section 1910.120 of Title 29 of the Code of Federal Regulations (29 CFR 1910.120) prior to beginning work on the site (USDOL 1989). Supervisory personnel will also have completed an 8-hour supervisor training course. All LEA employees that have completed the required training

will be identified in QAPP Worksheet 8 provided in Appendix A of this QAPP. All training records/certificates will be attached to this worksheet.

## 1.5 Project Planning/Problem Definition

### 1.5.1 Project Planning Meetings

The initial LEA project design meeting was held on June 5, 2009. In attendance were David N. Scotti and Jefferson Berdeen. During this meeting, projects elements were discussed and assignments for design document preparation were assigned. Subsequent meetings were held on June 26, 2009 and July 2, 2009.

### 1.5.2 Problem Definition Background

As described by USEPA, the site includes two parcels, 2072 and 2074 Smith Street, encompassing approximately 9.7 acres, as well as certain sediments and floodplain areas of the Woonasquatucket River (River) from Route 44 (Smith Street) southerly to Allendale Dam and further to an area just below Lyman Mill Dam. The site consists of certain contaminated areas within this area as well as any other location to which contamination from that area has come to be located, or from which that contamination came.

The 2072 Smith Street parcel is occupied by Brook Village Apartments. These apartments comprise an eleven-story apartment building that houses approximately 135 elderly residents. A series of four paved parking lots extend to the south of this building. The area of the parcel surrounding the building and parking lots includes landscaped areas and a paved driveway that provides access onto Smith Street. The parcel also includes a soil cap (Cap No. 2) located adjacent to the River (Drawing 1). The parcel is bordered to the north by Smith Street, to the west by the River, to the east by a drainage ditch (former tailrace), and to the south by the 2074 Smith Street parcel.

Centredale Manor Apartments occupies the 2074 Smith Street parcel. These apartments comprise an eight-story apartment building that houses approximately 130 elderly residents. Two paved parking lots are located on this parcel; one located to the north and one located to the west of the building. The apartment building, parking lots, and associated landscaped areas are located on the northern end of the parcel. The parcel also includes two constructed caps: Cap No. 1 on the southern end of the parcel, which is bordered by Allendale Pond, the River, and associated land to the south and the River to the west; and Cap No. 3 along the eastern extent of

the parcel that includes a drainage channel and occupies the area of the former tailrace (Drawing 1). The property is bordered to the north by the Brooks Village Apartments property.

Following several preliminary studies and initial removal actions conducted by USEPA and its contractors, the site was placed on the National Priorities List (NPL) in March 2000. These initial removal actions included clearing and grubbing of approximately six acres of the site, the collection of over six hundred samples, the installation of over a mile of cedar and chain-link fencing, and the installation of a soil cap over areas of contaminated soil and sediment. Beginning in April 2000, a Time-Critical Removal Action (TCRA) was implemented by certain potentially responsible parties (PRPs) pursuant to a First Unilateral Administrative Order for Removal Action (UAO 1) for the Site. During this TCRA, the PRPs constructed a second soil cap. This second cap was installed on the Brook Village parcel adjacent to the River.

In 2001, a Non-Time Critical Removal Action (NTCRA) was implemented pursuant to a Second Administrative Order for Removal Action (UAO 2) for the Site. The NTCRA included the restoration of Allendale Dam, the delineation of dioxin-impacted soil and sediment in residential-use areas along the eastern embankments of Allendale Pond and Lyman Mill Pond, and the excavation and off-site disposal of certain dioxin-impacted soil and sediment.

Pursuant to a Third Administrative Order on Consent for Removal Action, a permeable protective cap was constructed over soils and sediments within the former tailrace located along the eastern boundary of the site in 2003 and 2004. This cap was constructed to satisfy the objectives of a TCRA and moderates the impact of flood conditions by managing surface water drainage that discharges into the former tailrace.

The purpose of this work assignment is to conduct post-removal action groundwater sampling in the Groundwater Action Area identified by USEPA. The goal of the sampling is to identify the extent to which dioxins/furans may be present in groundwater (pore water) that may be discharging to the River.

The planned removal action consists of construction activities associated with the excavation of specified soils and sediments and the subsequent installation of an impermeable cap within the Groundwater Action Area. A portion of the Groundwater Action Area lies within parking lots of the Brook Village Apartment complex. Under this assignment, two types of field sampling activities will be performed. Upon completing the installation of the cap, groundwater samples collected from monitoring wells will be submitted to TestAmerica for analysis of polychlorinated

dibenzo-*p*-dioxins (PCDDs) and polychlorinated dibenzofurans (PCDFs) by USEPA SW-846 Method 8290A (USEPA 2008).

## 1.6 Project Quality Objectives and Measurement Performance Criteria

### 1.6.1 Project Quality Objectives

The objectives of this QAPP are to ensure that field activities are implemented and that sample data are collected and scientifically analyzed in a manner that is consistent with environmental industry standard practices so that the resulting data and information are valid and are considered to be legally defensible. This QAPP is intended to provide measures and procedures to obtain data that are of sufficient quality and quantity to confirm that the project quality objectives are achieved.

Groundwater (pore water) samples will be collected from monitoring wells installed beneath the River bed and screened within the transition zone of the River. Data from analysis of these samples will be used to identify the extent to which dioxins/furans may be present in groundwater (pore water) that may be discharging to the River. The groundwater samples will be analyzed for PCDDs/PCDFs according to USEPA SW-846 Method 8290A.

### 1.6.2 Measurement Performance Criteria

QA objectives are generally defined in terms of six parameters: precision, accuracy, representativeness, completeness, comparability, and sensitivity (PARCCS). DQO development focuses on identifying the end use of the data to be collected and on determining the degree of certainty with respect to PARCCS necessary to satisfy the intended use of the data. No data validation will be performed on the results generated from the analysis of samples collected to certify that off-site material sources are "clean" or to characterize wastes for off-site disposal. To ensure that the analytical data that are obtained for samples collected to identify the extent to which PCDDs/PCDFs may be present in groundwater (pore water) conform to the specified criteria, a Tier III data validation will be performed in accordance with the *Data Validation Standard Operating Procedure for Polychlorinated Dibenzodioxins and Polychlorinated Dibenzofurans Analysis By High Resolution Gas Chromatography/High Resolution Mass Spectrometry* (USEPA 2008).

#### 1.6.2.1 Precision

Precision is a measure of the reproducibility of sample results. To maximize precision, specific sampling and analytical procedures will be followed. All sampling and analysis work under the WP will adhere to the established protocols presented in this QAPP. Checks for analytical precision may include the analysis of matrix spike (MS), matrix spike duplicates (MSDs), laboratory duplicates and field duplicates. Checks for field measurement precision will include obtaining duplicate field measurements. Field duplicate pair and MS/MSD pair precision will be evaluated by calculating the relative percent difference (RPD) using the following equation:

$$RPD = \frac{(A - B)}{((A + B)/2)} \times 100$$

Where:
A = Analytical results from the original measurement
B = Analytical results from the duplicate measurement

Precision quality control limits for groundwater are found in QAPP Worksheet 28.1 provided in Appendix A of this QAPP.

#### 1.6.2.2 Accuracy

Accuracy is a measure of how close a measured result is to the true value. Both field and analytical accuracy will be monitored through initial and continuing calibration of instruments. In addition, reference standards, laboratory control samples (LCS), MS, double-blind performance evaluation (PE) samples, recovery standards, and surrogate standards may be used to assess the accuracy of the analytical data. Laboratory accuracy and bias performance in LCS and PE samples will be calculated as a percentage using the following equation:

$$\text{Percent Recovery} = \frac{(\text{Measured Value})}{\text{True Value}} \times 100$$

All MS/MSDs will be site-specific, and accuracy and bias performance in MS/MSD pairs will be calculated as a percentage using the following equation:

$$\text{Percent Recovery} = \frac{(A-X)}{B} \times 100$$

Where:

A = Value measured in spiked sample
X = Value measured in original sample
B = True value of amount added to sample or true value of standard.

Accuracy quality control limits for groundwater are found in QAPP Worksheet 28.1 provided in Appendix A of this QAPP.

1.6.2.3 Representativeness

Representativeness is the degree to which sampling data accurately and precisely represent site conditions, and is dependent on sampling and the variability of environmental media at the site.

1.6.2.4 Completeness

Completeness is defined as a measure of the amount of valid data obtained from an event compared to the total amount that was obtained. The completeness of a field or laboratory data set will be calculated by comparing the number of valid sample results generated to the total number of results generated:

$$\text{Completeness (percent (\%))} = \frac{\text{Number of Valid Results}}{\text{Total Number of Results Generated}} \times 100$$

As a general guideline, overall project completeness is expected to be greater than 90%. The assessment of completeness will require professional judgment to determine data usability for intended purposes. This will be determined upon final assessment of the analytical results.

1.6.2.5 Comparability

Comparability is the degree of confidence with which one data set can be compared to another. At a minimum, comparability involves the use of similar reporting units for similar matrices. For PCDD/PCDF analysis using USEPA SW-846 Method 8290A, the units will be picograms per liter (pg/L) for aqueous samples.

1.6.2.6 Sensitivity

Sensitivity is the ability of the method or instrument to detect the target analytes at the level of interest. The quantitation limit (QL) is the minimum concentration of an analyte that can be routinely identified and quantified above the method detection limit (MDL). Sensitivity of a given method is referred to as the method detection limit (MDL).

Preliminary DQOs are identified in this QAPP to ensure that the data generated during field sampling that are to be used in the overall assessment will be of adequate quality and sufficient

quantity to form a sound basis for decision-making purposes relative to the stated objectives. DQO summaries for the project activities are presented as follows:

*Data Use*

Monitoring well sampling will be performed to collect groundwater (pore water) samples to assess the extent to which PCDDs/PCDFs may be present in the groundwater (pore water).

*Data Types*

Groundwater sampling will include the collection and analysis of filtered and unfiltered samples. The locations of the monitoring wells are specified in the WP.

*Data Quality*

Fixed-laboratory analysis for PCDDs/PCDFs in aqueous samples will be conducted in accordance with USEPA SW-846 Method 8290A. The results of the fixed laboratory analysis will be presented in accordance with USEPA Region I, Tier III data deliverables package and final electronic deliverables. These results will include the results for QA/QC samples, namely: field duplicate samples, PE samples, and field equipment rinsate blank samples.

*Data Quantity*

It is anticipated that one filtered and one unfiltered groundwater sample will be collected from each of two monitoring wells. In addition, quality control (QC) samples, namely: field duplicate samples, PE samples, and field equipment rinsate blank samples will be collected. The QC samples will be analyzed for PCDDs/PCDFs in accordance with USEPA SW-846 Method 8290A.

*Sampling and Analysis Methods*

The samples will be collected in accordance with the *Loureiro Engineering Associates, Inc. Standard Operating Procedure for Low Flow (Low Stress) Liquid Sample Collection and Field Analysis*, modified as described in Section 9.4 of this QAPP. This Standard Operating Procedure (SOP) (SOP ID 10039) is included in Appendix B of this QAPP. The groundwater samples that are collected will be analyzed for PCDDs/PCDFs in accordance with USEPA SW-846 Method 8290A. The reporting limits for each of the analytes is provided in QAPP Worksheet 15 provided in Appendix A.

*Precision and Accuracy Quality Control Limits*

Precision and accuracy quality control limits will be based on the laboratory quality control data and QC samples submitted to the laboratory. Data representativeness will be addressed by comparing the sample quantities and/or locations identified in this QAPP to the sample quantities and/or locations actually collected during sampling activities. Data comparability will be addressed during data verification by ensuring that the analytical methods and data reporting are consistent. Data completeness will be assessed at the conclusion of the QA/QC activities by comparing the number of valid results generated to the total number of results generated.

## 1.7 Secondary Data Evaluation

No secondary data have been used in the preparation of this QAPP.

## 1.8 Project/Task Description and Schedule

### 1.8.1 Project Overview

In summary, the scope of work to be conducted in the Groundwater Action Area includes: (i) excavating potentially impacted soils and sediments limited to specified lines and grades; (ii) removing the excavated soils and sediments from the site and transporting them off-site to an approved facility for thermal treatment; (iii) backfilling the area of excavation; and, (iv) constructing an impermeable cap over the Groundwater Action Area. During the soil and sediment removal activities, air monitoring will be performed to assess the need to implement work controls, such as dust-suppression measures, while construction is occurring. Monitoring wells will be installed during the placement of the cap materials. The wells will be used to obtain post-removal action groundwater (pore water) samples. The Groundwater Action Area is shown in Drawing 1.

### 1.8.2 Project Schedule

The Groundwater Action Area removal action is expected to commence in August 2009. Groundwater (pore water) samples will be collected as part of any required post-removal groundwater monitoring subsequent to the installation of the cap.

# 2. MEASUREMENT/DATA ACQUISITION

## 2.1 Overview

This section describes the post-removal action groundwater monitoring program designed to achieve the stated objectives. The field sampling and laboratory analytical methods, sample preservation and handling requirements, QA/QC requirements, and requirements for the management of investigation-derived wastes are discussed. Information regarding the field and laboratory instruments, such as maintenance and calibration, and data management is described.

## 2.2 Sampling Tasks

### 2.2.1 Sampling Process Design and Rationale

Based on the USEPA's Conceptual Site Model (CSM), shallow groundwater within the Groundwater Action Area includes a facilitated dioxin transport pathway from impacted soil below the water table to the River. USEPA's contaminant transport theory is generally presented in the *Interim Final Remedial Investigation Report* prepared by Battelle (2005). In this report, USEPA reveals its "fate and transport" theory for the mobilization of dioxin to the River, through: (i) cosolvency, defined as an increased potential for migration of dioxin due to reduced sorption to soil or enhanced solubility; and/or (ii) colloid-facilitated transport, defined as the increased mobility that results from the sorption of normally immobile compounds to mobile colloids.

While the TCRA is intended to address USEPA's concern regarding mobilization of dioxin to the River, Emhart does not concur with USEPA's fate and transport theory and Emhart's technical consultants believe that the installation of a cap alone would be sufficient to meet USEPA's remedial objectives for the Groundwater Action Area. As articulated in correspondence submitted to USEPA on Emhart's behalf: (i) attempts to measure dioxin flux to the River have not demonstrated the occurrence of the facilitated dioxin transport phenomenon; (ii) dioxin concentrations reported for unfiltered and filtered groundwater samples are anomalies and do not indicate dioxin mobilization through groundwater, but result from sheer stress on soil particles within the overburden induced through the groundwater sampling process, thereby mobilizing soil particles proximate to the well screen which, under natural flow conditions, would otherwise remain stationary; and (iii) concentrations of chlorinated volatile organic compounds (VOCs) detected in groundwater are insufficient to enhance dioxin solubility.

Although Emhart's disagreement with USEPA's conceptual site model is substantiated technically, and has been expressed to the Agency, USEPA maintains that facilitated dioxin transport remains plausible and believes that a combination of excavation and capping that is described in this WP is required. While it is prepared to implement the TCRA, Emhart does not waive, and it specifically reserves all of its rights, claims, defenses, and remedies with respect to challenging the selection by USEPA of the TCRA and any other aspect of the remedy selected by USEPA for the site.

The implementation of the TCRA will fulfill USEPA's *Principles for Managing Contaminated Sediment Risks at Hazardous Waste Sites* (USEPA, 2002) and the recommendations of the Contaminated Sediments Technical Advisory Group (CSTAG) that *all potential sources of contamination should be controlled early and in a logical and iterative manner* (USEPA, August 2004). The shallow groundwater remedy described in the WP will control potential sources of contamination before the selection and implementation of the overall site remedy and will be a logical step in the overall remedy for the site. Moreover, this TCRA will reduce risk in the short-term and will provide a permanent remedy consistent with the long-term remedies under evaluation for the other areas of the site. Also, the TCRA described in the WP will permanently remove contaminant mass, consistent with USEPA's preferred remedy for impacted soil.

The TCRA objective for the Groundwater Action Area is to provide overall, long-term protection of human health and the environment by preventing or reducing the potential for the migration of, and direct contact with, surface soils, sub-surface soils, and sediments that may be impacted with dioxins. This objective is to be achieved by excavating potentially impacted soils and sediments to specified lines and grades, backfilling, and constructing an impermeable cap over this area. The impermeable cap will eliminate any potential for the migration of and direct contact with impacted soils and sediments that remain in the Groundwater Action Area following excavation. In meeting the objective for the Groundwater Action Area, the TCRA will address USEPA's concern regarding mobilization of dioxin to the River.

The post-removal action groundwater monitoring program has been designed to collect groundwater (pore water) samples from two monitoring wells installed and screened in the groundwater-to-surface water transition zone. By analyzing these samples for PCDDs/PCDFs, an assessment may be made as to whether or not dioxin may be present in the groundwater (pore water). Thus, USEPA's concern regarding dioxin mobilization will be addressed.

### 2.2.2 Sampling Collection Procedure

Samples collected during the project will consist of groundwater obtained from newly installed monitoring wells. The SOPs to be followed in accordance with the WP include those for collecting these samples. These SOPs specify the equipment and procedures for sampling groundwater. The SOPs referenced in the WP include:

- SOP ID 10005: *Loureiro Engineering Associates, Inc. Standard Operating Procedure for Quality Assurance/Quality Control Measures for Field Activities*
- SOP ID 10007: *Loureiro Engineering Associates, Inc. Standard Operating Procedure for Installing and Developing Monitoring Wells and Piezometers*
- SOP ID 10030: *Loureiro Engineering Associates, Inc. Standard Operating Procedure for Processing Performance Evaluation Samples*
- SOP ID 10038: *Loureiro Engineering Associates, Inc. Standard Operating Procedure for Documentation and Integrity of Field Sampling Activities*
- SOP ID 10039: *Loureiro Engineering Associates, Inc. Standard Operating Procedure for Low Flow (Low Stress) Liquid Sample Collection and Field Analysis*
- SOP ID 10041: *Loureiro Engineering Associates, Inc. Standard Operating Procedure for Monitoring Well Abandonment*
- SOP ID 10059: *Loureiro Engineering Associates, Inc. Standard Operating Procedure for Management of Investigation-Derived Waste*

A copy of these SOPs are provided in Appendix B of this QAPP.

#### 2.2.2.1 Sample Containers

Sample containers will be supplied to LEA by TestAmerica and will be in the possession of field personnel prior to commencement of sampling activities. The sample containers will be filled to near capacity during sample collection. Container types for each matrix are specified in QAPP Worksheet 19 in Appendix A.

#### 2.2.2.2 Sample Preservation

Immediately upon collection, all samples will be placed in coolers and will be packed in ice. A cooler temperature blank will be prepared for each cooler during every sampling event. The acceptable range for the cooler temperature is 4 ± 2 degrees centigrade (°C) as specified in QAPP Worksheet 19 in Appendix A. The sample temperature will be noted on the chain-of-

custody (COC) form upon receipt by TestAmerica. If the cooler temperature is outside the acceptable limits upon receipt by the laboratory, the deviation will be noted and the Laboratory Project Manager will immediately contact the LEA Project Manager.

2.2.2.3 Sample Holding Times

The required sample holding times are specified in QAPP Worksheet 19 included in Appendix A.

2.2.2.4 Sampling SOP Modifications

Minor modifications to SOP ID 10039: *Loureiro Engineering Associates, Inc. Standard Operating Procedure for Low Flow (Low Stress) Liquid Sample Collection and Field Analysis* have been made for the post-removal action groundwater monitoring activities. The modifications are provided as follows:

- Section 4.7.5 of SOP ID 10039 specifies that the rate of evacuation shall be approximately 0.1 liters per minute (100 milliliters per minute (ml/min)), with the evacuation rate not to exceed 0.25 liters per minute (250 ml/min). For the groundwater sampling associated with this project, this specification is modified such that the rate of evacuation from the monitoring wells shall not exceed 0.02 liters per minute (20 ml/min).

- Section 4.9.2. of SOP ID 10039 specifies that if after 2.5 hours of purging, or the evacuation of three well volumes, the turbidity has not stabilized, then sample collection can be initiated. For the groundwater sampling associated with this project, this specification is modified such that if the turbidity has not stabilized, sample collection will be initiated only if a turbidity level of less than 5 Nephalometric Turbidity Units (NTUs) has been established. No samples will be collected if purged groundwater exhibits a turbidity of greater than 5 NTUs.

- Both unfiltered and filtered groundwater samples will be collected and submitted for analysis for PCDDs/PCDFs. The filtered samples will be field-filtered using a 10-micron in-line filter.

If any additional modifications or deviations from the SOPs are necessary to effectively implement the post-removal action groundwater monitoring, then the LEA Project Manager will be notified to obtain authorization to proceed. Any additional, authorized modifications or deviations from the SOPs will be recorded in the field paperwork and placed in the project notebook and project central file.

#### 2.2.2.5 Cleaning and Decontamination of Equipment/Sample Containers

All non-disposable sampling and testing equipment that comes into contact with the sample medium such as submersible pumps will be decontaminated to prevent cross-contamination between sampling points, as described below:

- Brush to remove gross contamination;
- Potable water and detergent (Alconox or Liquinox) wash and scrub with brush;
- Rinse with potable water;
- Rinse with deionized water (analyte free);
- Rinse with 2-propanol;
- Rinse with hexane;
- Air dry (to the extent practical) on aluminum foil or in a strainer; and,
- Wrap in aluminum foil for transport (or if not being used immediately).

The analytical laboratory will provide pre-cleaned sample containers.

#### 2.2.2.6 Field Equipment Calibration

The equipment to be used for data collection, laboratory analysis, and health and safety monitoring is to be calibrated and maintained following the specific equipment manufacturers instructions. During excavation activities air monitoring will be performed using a Photovac, Inc. 2020 portable photoionization detector (PID) to measure VOCs in air. During these activities, a dust monitor will be used to measure particulate matter suspended in air that is less than 10 microns ($\mu$). The monitoring equipment will be calibrated at the beginning of each work day and as needed throughout each work day in accordance with the manufacturer's instructions. The calibration will be recorded on Daily Field Report Forms.

#### 2.2.2.7 Field Equipment Maintenance

Each piece of equipment used for data collection, laboratory analysis, and health and safety monitoring is to be maintained following the specific equipment manufacturers instructions. If damaged or failed parts are identified during the daily maintenance and calibration check and it is determined that the damage could have an impact on the instruments performance, the instrument will be removed from service until the identified parts are repaired or replaced.

#### 2.2.2.8 Inspection and Acceptance Requirements for Supplies/Sample Containers

TestAmerica will provide and be responsible for inspecting all laboratory supplies and consumables, such as reagents and sample preservatives. The laboratory will verify that the supplies and consumables are acceptable for use. The laboratory will provide the appropriate sampling containers supplied with the proper preservative, if necessary.

## 2.3 Analytical Tasks

### 2.3.1 Analytical SOPs

The laboratory analytical SOPs to be used for the analysis of samples are provided in Appendix C. The laboratory shall document and report the performance of the analytical method used in conjunction with the samples being analyzed. This documentation will include raw data for all field samples analyzed as well as QC samples associated with the sample batch.

Any laboratory performing analyses will be required to review and validate its results prior to reporting. Whenever a result falls out of method or laboratory performance criteria, the laboratory will be required to investigate the cause of the nonconformance and will be required to take corrective action. The corrective action may include, but is not limited to:

- Re-analysis of standards;
- Adjustment of instrument operating conditions, followed by re-analysis of standards; or,
- Re-analysis of all samples associated with out of control operations.

The goal of the corrective action is to provide the best quality results. All corrective actions will be documented by the analyst and confirmed in writing by the appropriate level of management in the case narrative. All quality problems will be brought to the attention of the LEA Project Manager in a timely fashion. This may be done by telephone provided it is followed up in writing.

Any modification to the analytical method/SOP will be submitted to LEA and the USEPA QAPP Coordinator prior to implementation to ascertain any impact the modification may have on the quality of the analytical data. The proposed modification must be approved by the USEPA QAPP Coordinator prior to implementation.

2.3.2 Analytical Instrument Calibration Procedures

TestAmerica will perform instrument calibration as described in QAPP Worksheet 24 included n Appendix A.

2.3.3 Analytical Instrument Maintenance, Testing, and Inspection Procedures

Routine maintenance, testing, and inspection procedures are presented in QAPP Worksheet 25 included in Appendix A. The laboratory will develop a preventative maintenance schedule as recommended by the manufacturer for each analytical instrument. Instrument maintenance logs will be kept with each instrument and updated as maintenance procedures are performed. All instruments will undergo all QC checks, such as tuning and calibration, required by the analytical method prior to any sample analysis.

2.3.4 Analytical Supply Inspection and Acceptance Procedures

Supplies and consumables will meet the requirements of the specific task. The TestAmerica Laboratory Manager or designee will perform the inspection of consumables and supplies for use on the project. All supplies will have no visible damage or defects prior to accepting delivery of these items.

## 2.4 Sample Collection Documentation, Tracking and Custody Procedures

2.4.1 Sample Collection Documentation

2.4.1.1 Field Notes

All field notes will be recorded on Daily Field Report Forms. The following information will be included on these forms:

- Site Name and location;
- Project commission number;
- Names, job functions, and organizational affiliations of personnel on site;
- Dates (month/day/year) and times (military) of all entries made on the forms and user signatures;
- Description of all site activities, including site entry and exit times;
- Weather conditions, including temperature and relative humidity;
- Site observations;

- Identification and description of sample morphology and collection locations;
- Sample collection information, including dates (month/day/year) and times (military) of all samples collected, sample collection methods and devices, sample collection heights/depths, sample preservation information, analyses requested, as well as COC information such as sample location designations that are cross-referenced to field sample numbers on the Daily Field Report Forms;
- Contractor and subcontractor information (address, name of personnel, job functions, organizational affiliations);
- Records of photographs taken (if any); and,
- Site sketches and diagrams made on site (if any).

2.4.1.2 Field Documentation Management System

All field paperwork will be submitted to the LEA Data Manager on a daily basis. Each data set that is received in hardcopy format will be entered into the database by the Database Manager or his/her designee. After entry into the database, all data will be verified by designated technical personnel. This verification process will entail a review of the database output against the original field forms, and a review of any corrections that need to be made and that are submitted to the Database Manager. Upon verification of the data set, the designated technical personnel will initial and date the verification sheets, and submit these sheets to the Project Manager for placement in the project central file.

2.4.2 Sample Handling and Tracking System

2.4.2.1 Sample Numbering

Each sample that is collected will be assigned a unique, seven-digit sample designation. This sample number designation will be cross-referenced on the Daily Field Report Forms to a specific sample location. The unique sample number designation is use to avoid analyst bias by keeping the sample location unknown to the analyst. Also, the sample number designation is used to readily query the database for information on the sample. The sample number designation will be noted in indelible ink on the label, field paperwork, and COC form.

2.4.2.2 Sample Labels

At the time of collection, each sample will be labeled. The label will include the sample number designation, date of sampling, and time of sampling. A copy of an example label is presented in Appendix D.

#### 2.4.2.3 Sample Packaging

Samples shipped to the selected analytical laboratory will be packaged and labeled in compliance with current and applicable United States Department of Transportation (USDOT) regulations. Any additional information required by the overnight courier will be provided.

Each sample will be protected with bubble wrap or similar protective material after being tightly sealed and wiped clean. Samples designated for overnight shipment will be individually placed in plastic bags and will be sealed. The samples will then be packaged on ice in a plastic cooler that is lined with a plastic bag. The ice will be placed between the individually-packaged samples and the plastic bag that is used to line the cooler. The outer plastic bag that is used to line the cooler will then be sealed. A temperature blank will be included with the samples to record the cooler temperature upon receipt by the laboratory.

COC forms will be enclosed in a watertight self sealing plastic bag taped to the underside of the cooler lid. The cooler will then be sealed with custody seals and strapping tape. A copy of an example custody seal is presented in Appendix D. The laboratory address will be placed on the outer lid of the cooler using the appropriate overnight courier documentation.

#### 2.4.2.4 Sample Custody

Custody will be maintained for all samples collected at the site. Strict adherence to COC protocols, including sample identification, custody seals, COC forms, personal custody, and transfer of custody will be followed.

A sample is considered to be in an individual's custody if the sample is

- In the physical possession of the responsible party;
- Secured to prevent tampering; and,
- Placed in a restricted area by the responsible party.

COC forms will be used to document sample custody from the field to the laboratory. The COC form will be filled out completely and accurately to document samples collected in the field and to request proper laboratory analyses. The COC forms must include the following information:

- Project name and commission number;
- Site name;
- Sample numbers;

- Sample type or matrix;
- Collection dates and times;
- Number of containers for each sample;
- Analyses required, including appropriate method reference;
- Remarks/comments; and,
- Signature of samplers.

The COC form will be signed by the Task Manager or his/her designee upon completion of the form and confirmation that the information on the form is complete and accurate. The COC form will include the date and time that the form is signed. Any changes to the form will be initialed by the individual making the changes. The COC will terminate upon receipt by the laboratory. A copy of the COC form will be retained in the project central file. A copy of an example COC form is presented in Appendix D

2.4.2.5 Sample Transfer and Shipment

When possession of the samples is transferred, the individual relinquishing the samples and the individual receiving the samples will sign the COC form and record the date and time of sample transfer on the appropriate place on the form. This record represents the official document for all transfers of sample custody.

All samples designated for delivery to the selected analytical laboratory will be shipped via overnight delivery. The samples will be shipped according to USDOT labeling and packaging requirements. Any additional information requested by the overnight courier will be provided. The physical address of the selected analytical laboratory is:

Test America – West Sacramento
880 Riverside Parkway
West Sacramento, CA 95606
Tel. 916.373.5600

Upon receipt by the laboratory, any missing samples, missing labels, broken sample bottles, and improperly preserved samples will be noted on the COC form. Any damage to the custody seal prior to laboratory receipt will be noted on the COC form. In case of any of the above problems, the laboratory sample custodian will notify the Laboratory Project Manager. The Laboratory Project Manager will then contact the LEA Project Manager to establish corrective actions.

Upon receipt by the laboratory, the samples will be logged into the Laboratory Information Management System (LIMS). The following information will be documented in the LIMS:

- Date and time of sample receipt;
- Project Name and Commission number;
- Field sample number;
- Laboratory sample number (assigned at log-in);
- Sample matrix;
- Analytical parameters;
- Storage location; and,
- Log-in person's initials.

All information regarding the samples will be secured at the end of each business day. All samples will be stored in a designated storage refrigerator.

2.4.2.6 Daily Field Report Forms

The field team will complete Daily Field Report Forms for all aqueous samples collected. These forms will contain information about each sample location, the date of the groundwater sampling event, and the times that the samples are collected. Also, these forms will contain information about the sample collection process, and will provide a description of the physical characteristics of the samples, the sample containers used, and the requested analyses.

2.4.2.7 Chain-Of-Custody Record and Custody Seal

The original COC form will be completed by the Task Manager or designee and will be enclosed in plastic and secured to the inside lid of the sample cooler prior to shipment to the laboratory. If multiple coolers are required to ship a single set of samples, the COC form will be included in the cooler labeled "Cooler No. 1 of __". A copy of all COC forms will be retained by the field team so that they may be placed in the project central file. Shipping coolers will be sealed with tape and two custody seals will be placed across the cooler opening. Each custody seal will be initialed and dated.

The laboratory custodian receiving the sample coolers will sign and date the COC forms to acknowledge receipt of the samples. The laboratory will then be responsible for maintaining sample custody records and returning the original COC form with the laboratory data analytical report.

### 2.4.3 Quality Control Requirements

#### 2.4.3.1 Overview

The QC procedures identified in this section refer to both field and laboratory control measures. The results of the analysis of field and laboratory QC samples are to be used to document data quality and to control data acceptance within check limits established to meet the DQO requirements for the post-TCRA groundwater monitoring. The data quality indicators to be measured in assessing data usability are described in the sections that follow.

#### 2.4.3.2 Sampling Quality Control

In addition to periodic calibration of field equipment and appropriate documentation, QC samples will be collected or generated during sampling activities. QC samples include blank samples, duplicate samples, and performance evaluation (PE) samples.

*Field Equipment Rinsate Blank Samples*

Field equipment rinsate blank samples are to be obtained during groundwater sampling. Each field equipment rinsate blank sample will be obtained by running analyte-free deionized water over and through the sampling equipment after the equipment is decontaminated. This water will be collected in appropriate sample containers for analysis for PCDDs/PCDFs. These samples will be used to assess the effectiveness of the field decontamination procedures and to identify whether there are any extraneous sources of contamination. Field equipment rinsate blank samples are required at a rate of one per twenty field samples per matrix, or one per sampling event if fewer than twenty samples are collected.

*Field Duplicate Samples*

Field duplicate samples provide precision information regarding homogeneity and distribution of the contaminants. Also, field duplicate samples measure the bias of sub-sampling. Field duplicate samples will be collected as co-located samples at the rate of one field duplicate sample per matrix.

*Temperature Blanks*

Temperature blanks will be included in each cooler to be shipped to the analyzing laboratory. The laboratory will use the temperature blank to record the internal temperature of each cooler

upon receipt. The laboratory will record the temperature of each cooler and notify the LEA Project Manager in the event that the cooler temperature is received outside the acceptance criteria (4 ± 2°C).

*Performance Evaluation Samples*

One double-blind aqueous PE sample will be submitted for analysis for PCDDs/PCDFs using USEPA SW846 Method 8290A. PE samples are used to evaluate sample handling procedures from field activities until the time of analysis at the laboratory. In addition, PE samples are used to evaluate the laboratory's ability to accurately identify and quantify target analytes in a reference matrix at an unknown concentration.

2.4.3.3 Analytical Quality Control

Laboratory QC measures will be employed to ensure the quality of the laboratory analytical data provided for the post-TCRA groundwater monitoring. These internal measures include the analysis of method blanks, LCS, MS/MSDs, and the assessment of standards. The data that fall outside the QA/QC limits established for these samples and standards will be qualified in accordance with the *Data Validation Standard Operating Procedure for Polychlorinated Dibenzodioxins and Polychlorinated Dibenzofurans Analysis By High Resolution Gas Chromatography/High Resolution Mass Spectrometry* (USEPA, 2008). The field aqueous samples associated with these internal laboratory QC measures will be qualified, accordingly.

*Method Blanks*

Sources of contamination in the analytical process, whether specific analytes or interferences, need to be identified, isolated, and corrected. The method blank is useful in identifying possible sources of contamination within the analytical process. For this reason, it is necessary that the method blank is initiated at the beginning of the analytical process and encompasses all aspects of the analytical work. As such, the method blank would assist in accounting for potential contamination attributable to glassware, reagents, instrumentation, or other sources, which could affect the sample analytical results. One method blank will be analyzed with each analytical batch associated with no more than 20 samples. The criterion for method blanks is such that no target compound should be present at or above the laboratory quantitation limit.

*Laboratory Control Samples*

LCS are used to evaluate the laboratory's ability to accurately identify and quantify target analytes in a reference matrix at an unknown concentration. The frequency for LCS evaluation is one per analytical batch associated with no more than 20 samples. Laboratory control limits for are presented on QAPP Worksheet 28.1 included in Appendix A.

*Matrix Spike/Matrix Spike Duplicates*

MS/MSDs are used to measure the accuracy of analyte recovery from groundwater samples. The frequency for MS/MSDs is one per 20 samples. Site-specific MS/MSDs will be collected as part of the field sampling program. The laboratory control limits for the site-specific MS/MSDs are presented on QAPP Supplemental Worksheet 28.1 included in Appendix A.

The percent recovery and the relative percent difference (RPD) will be evaluated for MS/MSD data and compared with the acceptance criteria as stated in the appropriate USEPA analytical method. When MS recoveries and RPDs are outside QC limits, associated MS blank and surrogate recoveries will be evaluated to attempt to verify the reason for deviation and to assess the effects on the reported sample results.

*Calibration Standards*

Compliance requirements for initial calibration are established to ensure that the instrument is capable of producing acceptable qualitative and quantitative data. Calibration check standards will be analyzed as specified in the applicable analytical method. In analyses where internal standards are used, a calibration check standard will only be analyzed at the beginning of an analytical series. If the results of the calibration check standard exceeds specified tolerances, then all samples analyzed since the last acceptable calibration check standard will be re-analyzed. Laboratory instrument calibration standards will be selected utilizing the guidance provided in the analytical methods outlined in QAPP Worksheet 23 included in Appendix A.

*Internal Standards*

Instrument performance, stability, and laboratory precision throughout an analytical sequence is monitored by the addition of internal standard compounds. Internal standard areas and retention times are monitored for organic analysis performed by gas chromatograph/mass spectrometry (GC/MS) methods. Method specific internal standard compounds are spiked into all field samples, calibration standards, and QC samples after preparation and prior to analysis. If the

internal standard areas in one or more samples exceed the specified tolerances, then the instrument will be recalibrated and all affected samples will be reanalyzed. The acceptability of internal standard performance will be assessed using the guidance provided within the analytical SOPs referenced in QAPP Worksheet 23 included in Appendix A.

*Reference Standards*

Reference standards are standards of known concentration, and independent in origin from the calibration standards. Reference standards, are generally available through the USEPA, the National Bureau of Standards, or from sources referenced in the analytical methods. The intent of reference standard analysis is to provide insight into the analytical proficiency within an analytical series.

## 2.5 Documentation, Records, and Data Management

### 2.5.1 Overview

After field and laboratory data are obtained, the data will be subject to the following:

- Reduction or manipulation mathematically or otherwise into meaningful and useful forms;
- Review;
- Organization, interpretation, and reporting; and
- External data review.

The following sections are presented to describe the data reduction, review, and reporting activities that will be conducted in the field and laboratory as part of the sampling and analysis program.

### 2.5.2 Project Documentation and Records

Each data set received in electronic or hardcopy format will be entered into the LEA database by the Database Manager or his/her designee. After entry into the database, all data will be verified by designated technical personnel by comparing the database output to the appropriate original hardcopy of the data, for example: field report forms, laboratory analytical reports, and COC forms. Any corrections that are necessary will be submitted to the Database Manager. Upon verification of the data set, the designated technical personnel will initial and date the verification paperwork, and will submit this paperwork to the Project Manager for placement in the project central file.

### 2.5.3 Laboratory Data Package Deliverables

The laboratory data package must adhere to the following general requirements:

- The data package must contain all original documents where possible.
- The data package must be legible.
- The data package must be clearly labeled.
- The data package must be arranged in increasing alphanumeric sample number order.
- The data package must be paginated consecutively in ascending order.

In addition, the laboratory data package must include the following information:

- Cover page, title, and table of contents;
- Case narrative;
- Tabulated summary forms for:
  - Field sample data, in order of increasing client sample identification number;
  - Laboratory Standards, in chronological order by instrument;
  - QC samples, in chronological order by type of QC sample;
  - Blank samples, in chronological order by instrument;
- Raw data for field samples, laboratory standards, QC samples, and blanks, in chronological order by instrument;
- Laboratory logbook pages for preparation and analysis of field samples, standards, QC samples, and blanks;
- COC documentation; and,
- Other project specific documents in the laboratory's possession.

All reports must be paginated. The laboratory must also document any difficulties encountered in the sampling and analysis program or any QA/QC deficiencies, as well as any corrective actions taken to address these difficulties or deficiencies.

All original laboratory data must be readily traceable to the following:

- Date of Analysis;
- The order in which sample analyses were performed;
- The personnel who performed, reviewed, and validated the work;
- Sample identification numbers;
- Method used to acquire the data;
- Name and location of the laboratory performing the analyses.

### 2.5.4 Data Reporting Formats

The selected analytical laboratory will generate analytical data using their standard format. Data deliverables will be assembled in accordance with USEPA Region I Data Validation Guidelines format for Tier III data deliverables (USEPA 1996). The elements and contents of the data deliverables package of the report are described in Section 13.3 of this QAPP.

### 2.5.5 Data Handling and Management

Data handling and management will be as described in Section 13.2 of this QAPP.

### 2.5.6 Data Tracking and Control

The electronic database for this project will be routinely backed-up and saved. At a minimum, the data will be backed-up on a weekly basis. In addition, the data will be backed up and saved at the conclusion of the removal action. The permanent archive for the data will consist of both an electronic and hard copy file maintained by LEA. The electronic archive will include retention of the TCRA data in a secure database. These data will be provided to USEPA, as specified in the WP.

## 2.6 **Field Data Reduction**

### 2.6.1 Overview

Information collected in the field through visual observation, manual measurement, and/or field instrumentation will be recorded on field forms. The LEA Task Manager will review such data for adherence to the field sampling SOPs, and for consistency. Concerns identified as a result of this review will be discussed with the field personnel, corrected if possible, and as necessary incorporated into the data evaluation process.

### 2.6.2 Daily Field Report Forms

The field team will complete Daily Field Report Forms for the aqueous samples collected. These forms will contain information about each sample location, the date of the groundwater sampling event, and the times that the samples are collected. Also, these forms will contain information about the sample collection process, and will provide a description of the physical characteristics of the samples, the sample containers used, and the requested analyses.

### 2.6.3 Chain-Of-Custody Record and Custody Seal

The original COC record will be completed by the Task Manager or his/her designee. The completed COC will be enclosed in plastic and secured to the inside lid of the sample cooler prior to shipment to the laboratory. If multiple coolers are required to ship a single set of samples, the COC form will be included in the cooler labeled "Cooler No. 1 of __". A copy of the COC form will be retained so that it may be placed in the project central file. Shipping coolers will be sealed with tape and two custody seals. The custody seals will be initialed and dated and will be placed across the cooler opening.

The laboratory custodian receiving the samples will sign and date the COC forms to acknowledge receipt of the samples. The laboratory will then be responsible for maintaining sample custody records and returning the original COC forms with the laboratory data analytical reports.

### 2.6.4 Field Modification Record

Changes in field operating procedures may be necessary because of changed field conditions or unanticipated events. Field modifications to SOPs or planned activities are to be made only in accordance with the following procedure:

1. If a substantial change is required, the LEA Task Manager or his/her designee will notify the LEA Project Manager of the need for the change.
2. If necessary, the LEA Project Manager will discuss the change with the USEPA On-Scene Coordinator, and will provide oral approval or denial to the LEA Task Manager for the proposed change.
3. The LEA Task Manager will document the change on a Field Modification Record (FMR) and will forward this form to the LEA Project Manager as soon as possible.
4. The Project Manager will sign the form and distribute copies to the LEA Project Officer, LEA QA Officer, LEA Task Manager, and the project central file.

A copy of the completed FMR will also be attached to the field copy of any affected documents, including the WP.

## 2.7 Analytical Data Report Format

### 2.7.1 Data Recording

Laboratory analytical data will be received in hardcopy and electronic format. After the data are electronically transferred into the LEA Database, the database output will be verified. This verification process will entail a review of the database output against the original COC forms and laboratory analytical reports, and a review of any corrections that need to be made which will be submitted to the Database Manager. Upon verification of the data set, the designated technical personnel will initial and date the verification paperwork, and will submit this paperwork to the Project Manager for placement in the project central file.

### 2.7.2 Data Validation

Prior to performing any analyses, the laboratory will ensure that all applicable criteria have been satisfied to ensure that reliable and accurate data will be generated. In addition, all laboratory analytical data will be undergo Tier III validation as stated in *Data Validation Standard Operating Procedure for Polychlorinated Dibenzodioxins and Polychlorinated Dibenzofurans Analysis By High Resolution Gas Chromatography/High Resolution Mass Spectrometry* (USEPA 2008). Evaluating data using this procedure will serve to identify the usability of the analytical data generated.

### 2.7.3 Data Transmittal

#### 2.7.3.1 Electronic Data Entry

Data in electronic format that are received from the analytical laboratory will be checked for completeness by comparing the data received with the analyses requested on the COC form. Data transmitted in electronic format will be reviewed to ensure that the data files that are received match the hard copy of the laboratory analytical reports that are to be archived in the project central file.

The electronic data files will be uploaded into temporary database files. The uploading process will be conducted by the LEA Database Manager or his/her designee. The data that are uploaded will be flagged as "Not Verified" and are to be reviewed by technical staff.

All of the results received in electronic format will be compared with the hard copy of the original laboratory analytical reports. The data verification process will include an accuracy check of the data in these files relative to sample identification numbers, sample locations, analytes, concentrations, and qualifier codes. Upon verification, the data in the database will be saved in a permanent file and the "Not Verified" flag will be removed from the data.

#### 2.7.3.2 Manual Data Entry

Manual data entry will be performed for field data and any laboratory analytical data not received in electronic format. These data will be manually entered into the database, will be saved in a temporary database file, and will be flagged as "Not Verified". Once entered into the database, these data will be reviewed by technical staff. Following data verification, the data will be saved in a permanent file and the "Not Verified" flag will be removed from the data

Verification of manually entered data will be performed using the following procedures:

- A listing will be produced of the data entered to serve as a check for completion of entry.
- Each record entered into the database will be compared to original coded sheets. Data that are incorrect will be marked with revisions. The first page of each data listing will be initialed and dated by the person completing the verification.
- Corrections will be made, as necessary, to the database.
- A listing of the corrected data will be produced and the verification process will be repeated for the corrected values. This procedure will be repeated until all corrected data are verified.
- Temporary files will be converted to permanent files.

## 3. ASSESSMENT/OVERSIGHT

### 3.1 Assessments and Response Actions

The activities to be completed in assessing the quality of the work and the quality of the data obtained during post-TCRA groundwater monitoring are described in this section. These activities include conducting planned field and laboratory performance and system audits. The response actions, if any, to be taken based on the information obtained from these audits are also described.

## 3.2 Planned Assessments

### 3.2.1 Readiness Reviews

Readiness reviews will be conducted prior to commencing each phase of the project, as needed, to ensure that all components that are required for each phase are in-place. A discussion of the work activities to be conducted prior to implementing the work will ensure that all requirements of the QAPP are met.

### 3.2.2 Surveillance

Surveillance of site activities will be conducted by the LEA Task Manager or other field personnel on a daily basis. Activities that are conducted in the field will be documented on the Daily Field Report Forms. Any deviations from the QAPP will be reported to the Project Manager as soon as possible.

### 3.2.3 Field Sampling Technical System Audit

A Technical System Audit (TSA) shall be performed by the LEA Project Manager or person designated by the Project Manager shortly after commencing each phase of the planned project activities. The purpose of the TSA is to ensure that the facilities, personnel, training, procedures, and record keeping are in accordance with this QAPP. Performing a TSA early in the project provides opportunity for corrective action.

### 3.2.4 Performance Audits

The LEA Task Manager will monitor field performance. Field performance audit summaries will contain an evaluation of field measurements and field meter calibration to verify that measurements are taken according to established protocols. The QA Officer will review all field reports and communicate any concerns that he/she has to the Project Manager and/or Task Managers.

### 3.2.5 Internal System Audits

A field internal system audit is a qualitative evaluation of all components of field QA/QC. The system audit compares scheduled QA/QC activities that are identified in this QAPP to the QA/QC activities that have been completed.

### 3.2.6 Laboratory Technical System Audits

The analytical laboratory will perform internal audits consistent with applicable regulations. LEA reserves the right to conduct an on-site audit of the laboratory prior to the start of or during the laboratory analytical services provided for post-removal action groundwater monitoring activities. The audit may include, but may not be limited to an audit of:

- Instrumentation logs;
- Refrigerator and freezer temperature records;
- Analyte–free water supply records;
- Standard tracking program;
- Reagent chemical log-in, tracking, and disposal records;
- LIMS data entry and collection records;
- Laboratory SOPs and modifications to the SOPs; and,
- QA procedures and records, including solution logs, control charts, and other QA records.

### 3.2.7 Performance Evaluation Audit

Data for PE samples will be generated to provide information on the overall accuracy and bias of the analytical method and to assess laboratory performance. A PE audit will be conducted as part of the QA/QC measures identified in this QAPP. The PE audit will be conducted following USEPA Region I PE program guidance (USEPA 1996). An overview of the proposed PE audit program is provided as follows:

- LEA will coordinate the acquisition of one aqueous PE sample with a selected vendor prior to initiating the program;
- Sample acquisition, handling, and analyses will be in general accordance with EPA Region 1 guidance criteria; and,
- The aqueous PE sample will assess method performance on a double-blind basis.

All samples in a sample delivery group will be validated based on a comparison between the vendor-certified PE Performance Acceptance Limits (PALs) and the laboratory analytical results. PE samples will be evaluated for false negatives, false positives, and inaccurate target compound quantitation. The PE samples provide information on the magnitude and direction of quantitative bias for the laboratory method. Results that are outside the vendor-certified PALs will be qualified according to *Data Validation Standard Operating Procedure for Polychlorinated*

*Dibenzodioxins and Polychlorinated Dibenzofurans Analysis By High Resolution Gas Chromatography/High Resolution Mass Spectrometry* (USEPA 2008).

#### 3.2.8 Audit of Data Quality

An audit of data quality will be performed by the LEA management team prior to final reporting. This QA audit will reveal how the data were evaluated, what judgments were made, and whether uncorrected errors or mistakes were made in assessing the usability of the data.

### 3.3 Assessment Findings and Corrective Action Responses

The results of all audits and reviews, along with recommendations for corrective action, will be submitted to the LEA Project Manager as soon as possible. The LEA Project Manager will assess the need for any corrective action. In addition, the audited parties will receive an oral debriefing following the audit, to be followed by a written report of audit findings within one week of audit completion. A copy of the audit findings will be maintained in the project central file.

The identification of significant conditions that are adverse to quality, the cause of the conditions, and the corrective actions to correct these conditions will be documented by the QA Officer and will be reported to the appropriate levels of management. The LEA Project Manager will have overall responsibility for implementing the corrective actions and must identify those persons responsible for initiating corrective actions to immediately remedy adverse affects on quality.

### 3.4 Additional QAPP Non-Conformances

In the event of a deviation of the QAPP that is noted by project personnel outside of any formal assessment process, the LEA Project Manager will be notified immediately. An assessment of any affects on the quality of the data will be made, and corrective actions will be taken, as necessary. The correction actions may include, but are not limited to, sample re-analysis or re-sampling.

### 3.5 Quality Assurance Management Reports

Information obtained during the assessments described above will be documented in a written QA Management Report that is provided to the LEA Project Manager. QA Management Reports will include an assessment of the quality of the work and the quality of the data obtained during

post-TCRA groundwater monitoring. These reports will be appended to the QA/QC section of the Completion of Work Report (CWR).

### 3.6 Completion of Work Report

The CWR will comprise the final project report for the TCRA. The QA/QC section of the CWR will include a summary of the QA/QC measures and procedures implemented during the post-TCRA groundwater monitoring. In addition, the QA/QC section of the CWR will include a discussion of conformance relative to the requirements and procedures of the QAPP. In addition to the information provided in the QA Management Reports described above, the CWR will include the following information:

- A narrative and timeline of project activities;
- A summary of DQO development;
- Reconciliation of project data with DQOs;
- A summary of the major problems encountered and a discussion of how these problems were resolved;
- Data summary, including tables, charts, and graphs with appropriate sample number identification or location, concentration units, and data quality flags; and,
- Conclusions and recommendations.

## 4. DATA REVIEW

### 4.1 Overview

Three steps will be taken as part of the data review process to ensure that all project data quality needs are met. The steps are:

1. Verification: Verification is a review of the completeness of the data collected, both field sampling and laboratory analytical, to ensure the required data are available for use.
2. Validation: Validation is used to document and assess the performance of the field sampling activities relative to the requirements of the SOPs and manufacturer's instructions. Validation is also used to document and assess the performance of the laboratory relative to the requirements of this QAPP.
3. Data Usability: Data usability is an assessment of whether the data generated from the verification and validation steps are adequate to support decisions relative to the groundwater monitoring objectives.

## 4.2 Data Review Steps

### 4.2.1 Step I: Data Verification

#### 4.2.1.1 LEA Verification Steps

*Sampling Documents*

LEA will review all field sampling documentation to ensure it is in accordance with the *Loureiro Engineering Associates, Inc. Standard Operating Procedure for Documentation and Integrity of Field Sampling Activities* (SOP ID 10038). The field sampling documentation will be reviewed relative to the following information:

- Accurate completion of all Daily Field Report Forms which shall include meteorological data, the identification of all sample locations, sample notes, a description of field activities, a record of instrument calibration data, and COC forms;
- Identification of SOP or QAPP deviations, as necessary;
- Corrective action reports, as necessary; and,
- Documentation of corrective actions, as necessary.

*Analytical Data Package*

LEA will review the analytical data package to ensure specific elements are present that are needed to properly validate the data. The data package will be reviewed to verify that the following elements are present in the analytical data package and to verify that the information is accurate:

- Case narrative;
- Sample receipt and condition documentation;
- Proper sample identification;
- Proper analyses performed;

#### 4.2.1.2 Laboratory Verification Steps

TestAmerica will review the analytical data package to ensure its completeness and to ensure that the data are ready for validation:

- Case narrative;
- Internal laboratory custody transfer documentation;

- Documentation regarding sample condition upon receipt;
- Storage records;
- Sample chronology related to sample receipt and subsequent time for extraction and analysis;
- Identification of laboratory QC samples;
- Documentation of communications regarding the samples/analyses;
- Copies of laboratory preparation and analysis logs;
- Documentation of laboratory qualifiers;
- Corrective action reports;
- Documentation of corrective action results;
- Documentation of individual QC sample results;
- Documentation of laboratory SOP or QAPP deviations;
- Electronic data deliverable format and accuracy;
- Instrumentation calibration reports;
- Sample identification numbers;
- Analytical sample raw data;
- QC sample raw data,;
- QC summary report;
- Reporting forms with analytical results;
- Appropriate signatures on report; and
- Standard traceability records

#### 4.2.2 Step II: Data Validation

ESI will validate the field data generated by LEA and the laboratory analytical data generated by TestAmerica. Two data review steps are involved in this validation process. The first step, Step IIa, is a review of the compliance of the field sampling and laboratory analysis with SOPs and laboratory analytical methods. The second step, Step IIb, consists of a comparison of the field sampling activities and laboratory analysis with the measurement performance criteria specified in this QAPP.

##### 4.2.2.1 Step IIa Validation Activities

The specific Step IIa validation activities to be performed include verification that:

- Sampling and analytical information has been provided;
- Required analyses have been performed as requested;
- COC of the samples, from the time of collection until reporting of data, has been maintained;
- Holding times for analyses were met, and in the event that holding times were not met, the deviations from holding times were documented, the appropriate notifications were made, and the approvals needed to proceed were obtained prior to performing the analyses;
- Required sample handling, receipt, and storage procedures were followed, and that any deviations from these procedures were documented;
- Required sampling procedures were used and any deviations from the sampling methods were noted;
- Sampling procedures and field measurements met performance criteria;
- Accurate transcription of the field data from the original field paperwork to the LEA database was performed;
- Required laboratory analytical methods were used and any deviations from these methods were documented;
- Acceptable performance of QC samples was documented along with any deviations;
- Appropriate definition and application of laboratory data qualifiers was provided;
- Accurate transcription of raw laboratory data to the CWR was provided;
- PE samples met acceptable criteria;
- Traceability of the laboratory analytical standards was provided;
- Required communications procedures were followed by field and laboratory personnel;
- Field and laboratory audit reports have been maintained; and,
- Laboratory accreditation and certification records for the laboratory's performance on appropriate methods have been maintained.

Upon completing the Step IIa verification process, ESI will provide a summary report documenting the deviations from methods and procedures. This summary report will include a description of all laboratory data that were qualified and an explanation of all data qualifiers based on the Step IIa validation process.

#### 4.2.2.2 Step IIb Validation Activities

The specific Step IIb validation activities to be performed include verification that:

- Step IIa validation information has been provided;

- Impacts resulting from deviations from sampling and analytical methods and procedures have been identified;
- Groundwater sampling was conducted according to plan;
- An evaluation has been performed in assessing whether proper sampling procedures were followed;
- Appropriate laboratory data quantitation limits were achieved; and,
- QC data met all performance criteria.

Upon completing the Step IIb verification process, ESI will provide a summary report that includes an assessment of whether the data met the method performance criteria of this QAPP. The summary report will identify all laboratory analytical data that were qualified with an explanation of all data qualifiers based on the Step IIa and Step IIb validation processes.

### 4.2.3 Usability Assessment

To assess whether the data generated from post-TCRA groundwater monitoring activities are usable for decision-making purposes, the LEA Project Manager will assess the data for acceptable levels of precision, accuracy, and completeness. The methods used to asses these parameters are described in Section 6.2.

## 5. STREAMLINING DATA REVIEW

Data generated during the post-TCRA groundwater monitoring activities will undergo the full data verification and validation process. No streamlining of data verification or validation will be performed.

## REFERENCES

Battelle, 2005. *Interim Final Remedial Investigation – Centredale Manor Restoration Project Superfund Site North Providence, Rhode Island.* June 30, 2005.

United States Department of Labor, 1989. *Hazardous Waste Operations and Emergency Response, 29CFR 1910.120.* Occupational Safety and Health Administration, Washington, DC 20210, 1989.

United States Environmental Protection Agency, July 1996, Revised December 1996. *Region I, EPA-New England Data Validation Functional Guidelines for Evaluating Environmental Analyses.* U.S. EPA-New England Region I Quality Assurance Unit Staff, Office of Environmental Measurement and Evaluation, North Chelmsford, Massachusetts.

United States Environmental Protection Agency. *Principles for Managing Contaminated Sediment Risks at Hazardous Waste Sites.* Office of Solid Waste and Emergency Response Directive 9285.6-08. Washington, DC, February 12, 2002.

United States Environmental Protection Agency, July 2004. *Uniform Federal Policy for Quality Assurance Project Plans.* Office of Solid Waste and Emergency Response OSWER Directive 9272.0-17. Washington, DC, July 2004.

United States Environmental Protection Agency, 2004. *CSTAG Recommendations on the Centredale Manor Restoration Project (CMRP) Superfund Site.* Memorandum from Stephen J. Ells and John Meyer, CSTAG, to Ms. Anna Krasko. Washington, DC, August 18, 2004.

United States Environmental Protection Agency, 2008. *Test Methods for Evaluating Solid Waste, Physical/Chemical Methods (SW-846), Final Update IV.* Office of Solid Waste and Emergency Response. Washington, DC 2008 SW-846 USEPA.

United States Environmental Protection Agency, 2008. *Data Validation Standard Operating Procedure for Polychlorinated Dibenzodioxins and Polychlorinated Dibenzofurans Analysis By High Resolution Gas Chromatography/High Resolution Mass Spectrometry,* USEPA Region IV, Revision 5.0, November, 2008.

**DRAWING**

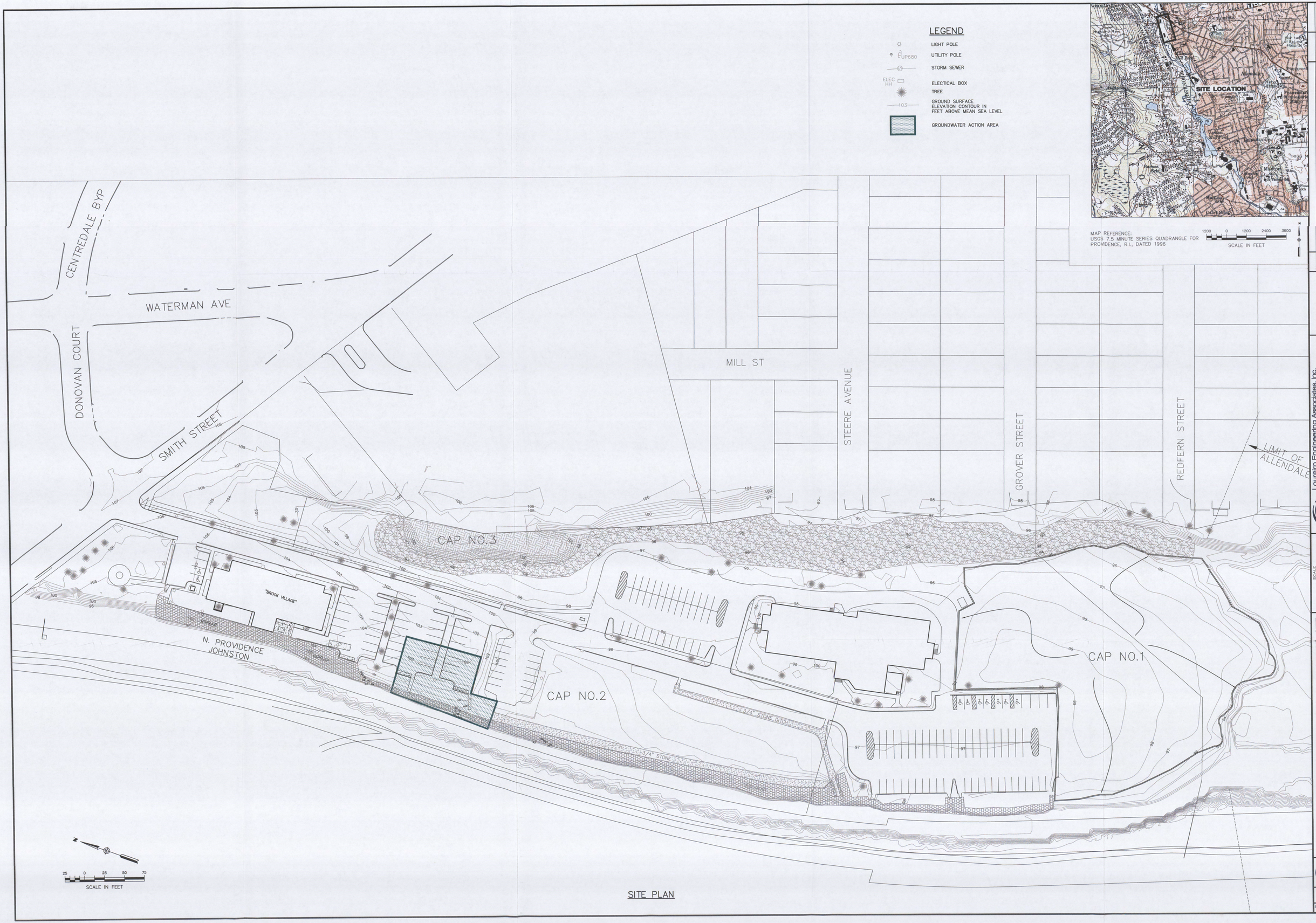


SITE PLAN

| REV. | DESCRIPTION OF REVISION | DATE | APPR. |
|---|---|---|---|

Laurelro Engineering Associates, Inc.
100 Northwest Drive • Plainville, Connecticut 06062
Phone: 860-747-6181 / fax: 860-747-8822
An Employee Owned Company • email : info@laurelro.com

| SCALE | DATE |
|---|---|
| AS SHOWN | 11/19/09 |
| PROJECT NO. 07MD509 | |
| DRAWN BY A.C.L. | DATE 11/19/09 |
| APPROVED BY D.N.S. | |

CENTREDALE MANOR RESTORATION PROJECT SUPERFUND SITE
NORTH PROVIDENCE, RHODE ISLAND

# SHALLOW GROUNDWATER REMEDY - GROUNDWATER ACTION AREA SITE PLAN

An Employee Owned Company

DRAWING 1

SHEET NO. 1 NO. OF SHEETS 1

## APPENDIX A

### Select QAPP Worksheets

QAPP Worksheet #2. QAPP Identifying Information
QAPP Worksheet #3. Distribution List
QAPP Worksheet #4. Project Personnel Sign-Off Sheet
QAPP Worksheet #5. Project Organizational Chart
QAPP Worksheet #8. Special Personnel Training Requirements Table
QAPP Worksheet #15. Reference Limits and Evaluation Table
QAPP Worksheet #18. Sampling Locations and Methods/SOP Requirements Table
QAPP Worksheet #19. Analytical SOP Requirements Table
QAPP Worksheet #20. Field Quality Control Sample Summary Table
QAPP Worksheet #21. Project Sampling SOP Reference Table
QAPP Worksheet #22. Field Equipment Calibration, Maintenance, Testing, and Inspection Table
QAPP Worksheet #23. Analytical SOP Reference Table
QAPP Worksheet #24. Analytical Instrument Calibration Table
QAPP Worksheet #25. Analytical Instrument and Equipment Maintenance, Testing, and Inspection Table
QAPP Worksheet #28. QC Samples Table
Supplemental QAPP Worksheet #28.1. Recovery & Precision Limits

**QAPP Worksheet #2**
(UFP-QAPP Manual Section 2.2.4)
QAPP Identifying Information

| | |
|---|---|
| Site Name/Project Name: | Centredale Manor Restoration Project Superfund Site |
| Site Location: | North Providence, Rhode Island 02911-1780 |
| Site Number/Code: | 0101388 |
| Operable Unit: | Not Applicable |
| Contractor Name: | Loureiro Engineering Associates, Inc. |
| Contractor Number: | Not Applicable |
| Contract Title: | Not Applicable |
| Work Assignment Number: | Not Applicable |

1. Identify guidance used to prepare QAPP:
EPA New England Quality Assurance Project Plan Guidance, Uniform Federal Policy for Quality Assurance Project Plans

2. Identify regulatory program: Comprehensive Environmental Response, Compensation and Liability Act

3. Identify approval entity: United States Environmental Protection Agency, Region 1, Boston, MA (EPA-NE)

4. Indicate whether the QAPP is a generic or a project-specific QAPP. (circle one)

5. List dates of scoping sessions that were held: June 5, 2009; June 26, 2009, July 2, 2009

6. List dates and titles of QAPP documents written for previous site work, if applicable:

| Title | Approval Date |
|---|---|
| *Quality Assurance Project Plan, Centredale Manor Restoration Superfund Site North Providence, Rhode Island* (LEA) | August 2001 |
| *Quality Assurance Project Plan, The Centredale Manor Site* (IT Corp.) | July 1999 |
| *ERRS I Program Quality Assurance Project Plan* (IT Corp.) | April 1999 |

7. List organizational partners (stakeholders) and connection with lead organization:

Rhode Island Department of Environmental Management (RIDEM)

8. List data users: LEA, EPA-NE, RIDEM

9. If any required QAPP elements and required information are not applicable to the project, then circle the omitted QAPP elements and required information on the attached table. Provide an explanation for their exclusion below: Not Applicable

Identify where each required QAPP element is located in the QAPP (provide section, worksheet, table, or figure number) or other project planning documents (provide complete document title, date, section number, page

numbers, and location of the information in the document). Circle QAPP elements and required information that are not applicable to the project. Provide an explanation in the QAPP.

| Required QAPP Element(s) and Corresponding QAPP Section(s) | | Required Information | Crosswalk to Related Documents |
|---|---|---|---|
| **1. Project Management and Objectives** | | | |
| 1.1 | Title and Approval Page | - Title and Approval Page | **Section 1.1** |
| 1.2<br>1.2.1<br>1.2.2<br>1.2.3<br>1.2.4 | Document Format and Table of Contents<br>Document Control Format<br>Document Control Numbering System<br>Table of Contents<br>QAPP Identifying Information | - Table of Contents<br>- QAPP Identifying Information | **Section 1.2, Appendix A** |
| 1.3 | Distribution List and Personnel Sign-Off Sheet | - Distribution List<br>- Project Personnel Sign-Off Sheet | **Appendix A** |
| 1.4<br>1.4.1<br>1.4.2<br>1.4.3<br>1.4.4 | Project Organization<br>Project Task Organization<br>Communication Pathways<br>Roles and Responsibilities<br>Special Training Requirements and Certification | - Project Organizational Chart<br>- Communication Pathways<br>- Personnel Responsibilities and Qualifications Table<br>- Special Personnel Training Requirements Table | **Section 1.4, Appendix A** |
| 1.5<br>1.5.1<br>1.5.2 | Project Planning/Problem Definition<br>Project Planning Meetings<br>Problem Definition Background | - Project Planning Session Documentation (including Data Needs tables)<br>- Project Scoping Session Participants Sheet<br>- Problem Definition Background<br>- Site Maps (historical and present) | **Section 1.5** |
| 1.6<br>1.6.1<br>1.6.2 | Project Quality Objectives and Measurement Performance Criteria<br>Project Quality Objectives<br>Measurement Performance Criteria | - Site-Specific DQOs<br>- Measurement Performance Criteria Table | **Section 1.6, Appendix A** |
| 1.7 | Secondary Data Evaluation | - Sources of Secondary Data and Information<br>- Secondary Data Criteria and Limitations Table | **Section 1.7** |
| 1.8<br>1.8.1<br>1.8.2 | Project Overview and Schedule<br>Project Overview<br>Project Schedule | - Summary of Project Tasks<br>- Reference Limits and Evaluation Table<br>- Project Schedule/Timeline Table | **Section 1.8** |

| Required QAPP Element(s) and Corresponding QAPP Section(s) | Required Information | Crosswalk to Related Documents |
|---|---|---|
| **2. Measurement/Data Acquisition** | | |
| 2.1 Overview<br>2.2 Sampling Tasks<br>2.2.1 Sampling Process Design and Rationale<br>2.2.2 Sampling Collection Procedures<br>2.2.2.1 Sample Containers<br>2.2.2.2 Sample Preservation<br>2.2.2.3 Sample Holding Times<br>2.2.2.4 Sampling SOP Modifications<br>2.2.2.5 Cleaning and Decontamination of Equipment/Sample Containers<br>2.2.2.6 Field Equipment Calibration<br>2.2.2.7 Field Equipment Maintenance<br>2.2.2.8 Inspection and Acceptance Requirements for Supplies/Sample Containers | - Sampling Design and Rationale<br>- Sample Location Map<br>- Sampling Locations and Methods/ SOP Requirements Table<br>- Analytical Methods/SOP Requirements Table<br>- Field Quality Control Sample Summary Table<br>- Sampling SOPs<br>- Project Sampling SOP References Table<br>- Field Equipment Calibration, Maintenance, Testing, and Inspection Table | **Section 2.1, Appendix A, Appendix B** |
| 2.3 Analytical Tasks<br>2.3.1 Analytical SOPs<br>2.3.2 Analytical Instrument Calibration Procedures<br>2.3.3 Analytical Instrument Maintenance, Testing, and Inspection Procedures<br>2.3.4 Analytical Supply Inspection and Acceptance Procedures | - Analytical SOPs<br>- Analytical SOP References Table<br>- Analytical Instrument Calibration Table<br>- Analytical Instrument and Equipment Maintenance, Testing, and Inspection Table | **Section 2.3, Appendix A, Appendix C** |
| 2.4 Sample Collection Documentation, Tracking and Custody Procedures<br>2.4.1 Sample Collection Documentation<br>2.4.1.1 Field Notes<br>2.4.1.2 Field Documentation Management System<br>2.4.2 Sample Handling and Tracking System<br>2.4.2.1 Sample Numbering<br>2.4.2.2 Sample Labels<br>2.4.2.3 Sample Packaging<br>2.4.2.4 Sample Custody<br>2.4.2.5 Sample Transfer and Shipment<br>2.4.2.6 Daily Field Report Forms<br>2.4.2.7 Chain-of-Custody Record and Custody Seal | - Sample Collection Documentation Handling, Tracking, and Custody SOPs<br>- Sample Container Identification<br>- Sample Handling Flow Diagram<br>- Example COC Form and Seal | **Section 2.4,.1 and Section 2.4.2 Appendix B, Appendix D** |
| 2.4.3 Quality Control Requirements<br>2.4.3.1 Overview<br>2.4.3.2 Sampling Quality Control<br>2.4.3.3 Analytical Quality Control | - QC Samples Table<br>- Screening/Confirmatory Analysis Decision Tree | **Section 2.4.3, Appendix A** |
| 2.5 Documentation, Records, and Data Management<br>2.5.1 Overview<br>2.5.2 Project Documentation and Records<br>2.5.3 Laboratory Data Package Deliverables<br>2.5.4 Data Reporting Formats<br>2.5.5 Data Handling and Management<br>2.5.6 Data Tracking and Control | - Project Documents and Records Table<br>- Analytical Services Table<br>- Data Management SOPs | **Section 2.5** |

| Required QAPP Element(s) and Corresponding QAPP Section(s) | Required Information | Crosswalk to Related Documents |
|---|---|---|
| **3. Assessment/Oversight** | | |
| 3.1 Assessments and Response Actions<br>3.2 Planned Assessments<br>3.2.1 Readiness Reviews<br>3.2.2 Surveillance<br>3.2.3 Field Sampling Technical System Audit<br>3.2.4 Performance Audits<br>3.2.5 Internal System Audits<br>3.2.6 Laboratory Technical System Audits<br>3.2.7 Performance Evaluation Audit<br>3.2.8 Audit of Data Quality | - Assessments and Response Actions<br>- Planned Project Assessments Table<br>- Audit Checklists<br>- Assessment Findings and Corrective Action Responses Table | **Section 3.1 and Section 3.2** |
| 3.3 Assessment Findings and Corrective Action Responses<br>3.4 Additional QAPP Non-Conformances<br>3.5 Quality Assurance Management Reports<br>3.6 Completion of Work Report | - QA Management Reports Table | **Section 3.3, Section 3.4, Section 3.5, and Section 3.6** |
| **4. Data Review** | | |
| 4.1 Overview<br>4.2 Data Review Steps<br>4.2.1 Step I: Data Verification<br>4.2.1.1 LEA Verification Steps<br>4.2.1.2 Laboratory Verification Steps<br>4.2.2 Step II: Data Validation<br>4.2.2.1 Step IIa Validation Activities<br>4.2.2.2 Step IIb Validation Activities<br>4.2.3 Usability Assessment | - Verification (Step I) Process Table<br>- Validation (Steps IIa and IIb) Process Table<br>- Validation (Steps IIa and IIb) Summary Table<br>- Usability Assessment | **Section 4.1, Section 4.2, and Section 4.3** |
| **5. Streamlining Data Review** | | |
| 5. Streamlining Data Review | | **Section 5** |

**QAPP Worksheet #3**
(UFP-QAPP Manual Section 2.3.1)
List those entities to whom copies of the approved QAPP, subsequent QAPP revisions, addenda, and amendments are to be provided.

## Distribution List

| QAPP Recipients | Title | Organization | Telephone Number | Fax Number | E-mail Address | Document Control Number |
|---|---|---|---|---|---|---|
| Ted Bazenas | On-Scene Coordinator | EPA-NE | 617.918.1230 | 617.918.0232 | bazenas.ted@epa.gov | |
| Nora Conlon | QAPP Coordinator | EPA-NE | 617.918.8335 | | conlon.nora@epa.gov | |
| Louis R. Maccarone II | Sr. Sanitary Engineer | RIDEM Superfund Program | 401.222.2797 ext. 7142 | 401.222.3812 | louis.maccarone@dem.ri.gov | |
| David N. Scotti | Project Manager | LEA | 860.747.6181 | 860.747.8822 | dnscotti@loureiro.com | |
| Rock Vitale | Director of Chemistry/Principal | Environmental Standards, Inc. | 610.935.5577 | 610.935.5583 | rvitale@EnvStd.com | |
| Pamela Schemmer | Quality Assurance Manager | TestAmerica, West Sacramento, CA | 916.373.5600 | 916.372.1059 | Pamela.Schemmer@testamericainc.com | |
| | | | | | | |
| | | | | | | |
| | | | | | | |
| | | | | | | |

**QAPP Worksheet #4**
(UFP-QAPP Manual Section 2.3.2)
Have copies of this form signed by key project personnel from each organization to indicate that they have read the applicable sections of the QAPP and will perform the tasks as described. Ask each organization to forward signed sheets to the LEA Project Manager so that they may be placed in the project central file.

**Project Personnel Sign-Off Sheet**

**Organization:**_____

| Project Personnel | Title | Telephone Number | Signature | Date QAPP Read |
|---|---|---|---|---|
| | | | | |
| | | | | |
| | | | | |
| | | | | |
| | | | | |
| | | | | |
| | | | | |
| | | | | |
| | | | | |
| | | | | |

**QAPP Worksheet #5**
(UFP-QAPP Manual Section 2.4.1)
Identify reporting relationships between all organizations involved in the project, including the lead organization and all contractor and subcontractor organizations. Identify the organizations providing field sampling, on-site and off-site analysis, and data review services, including the names and telephone numbers of all project managers, project team members, and/or project contacts for each organization.

## Project Organizational Chart

Approval Authority:
United States Environmental Protection Agency – Region I
Ted Bazenas – On-Scene Coordinator
Tel. 617.918.1230

Lead Organization:
Emhart Industries, Inc.
c/o Sullivan & Worcester LLP
1666 K Street, NW
Washington, DC 20006

Lead Organization Project Manager:
Jerome C. Muys, Esq. - Sullivan & Worcester LLP
Tel. 202.370.3920

Regulatory Approval:

| United States Environmental Protection Agency – Region I<br>Ted Bazenas – On-Scene Coordinator<br>Tel. 617.918.1230 | Rhode Island Department of Environmental Management<br>Louis Maccarone – Case Manager<br>Tel. 401.222.2797 |
|---|---|

Investigative Organization:

1.1.1.1.1.1 Loureiro Engineering Associates, Inc.
Jeffrey J. Loureiro, P.E., LEP – Principal-In-Charge, Project Coordinator

QA Officer:
Loureiro Engineering Associates, Inc.
Nick Skoularikis, PhD., LEP
Tel. 860.747.6181

Subcontractors: Data Validation
Organization: Environmental Standards, Inc.
Role: Third-Party, Independent Data Validator
Project Contact: Rock Vitale, Tel. 610.935.5577

Subcontractors: Environmental Laboratory Analyses
Organization: TestAmerica – West Sacramento, CA
Role: Laboratory Analyses
Project Contact: Pamela Schemmer, Tel. 916.372.1059

**QAPP Worksheet #8**
(UFP-QAPP Manual Section 2.4.4)
Provide the following information for those projects requiring personnel with specialized training. Attach training records and/or certificates to the QAPP or note their location.

## Special Personnel Training Requirements Table

| Project Function | Specialized Training – Title or Description of Course | Training Provider | Training Date | Personnel/Groups Receiving Training | Personnel Titles/ Organizational Affiliation | Location of Training Records/Certificates[1] |
|---|---|---|---|---|---|---|
| Air monitoring; monitor well/ piezometer abandonment & installation, groundwater monitoring, Health & Safety Supervision | Hazardous Waste Operations and Emergency Response (HAZWOPER) 40hr and 8hr refresher 29CFR 1910.120 [e] [8] & 1926.65 [e] [8] | LEA | 6/1992 40hr 3/4/2009 8hr | Dave Brisson | Senior Project Geologist – Field Geologist, LEA | LEA Office, Plainville CT |
| Air monitoring; monitor well/ piezometer abandonment & installation, groundwater monitoring, Health & Safety Supervision | Hazardous Waste Operations and Emergency Response (HAZWOPER) 40hr and 8hr refresher 29CFR 1910.120 [e] [8] & 1926.65 [e] [8] | LEA | 5/1999 40hr 3/4/2009 8hr | Scott Brown | Senior Technician LEA | LEA Office, Plainville CT |
| Air monitoring; monitor well/ piezometer abandonment & installation, groundwater monitoring, Health & Safety Supervision | Hazardous Waste Operations and Emergency Response (HAZWOPER) 40hr and 8hr refresher 29CFR 1910.120 [e] [8] & 1926.65 [e] [8] | LEA | 1/ 2004 40hr 3/4/2009 8hr | Alexander Clarke | Senior Technician LEA | LEA Office, Plainville CT |
| **Project Function** | **Specialized Training – Title or Description of Course** | **Training Provider** | **Training Date** | **Personnel/Groups Receiving Training** | **Personnel Titles/ Organizational Affiliation** | **Location of Training Records/Certificates[1]** |

| | | | | | | |
|---|---|---|---|---|---|---|
| Air monitoring; monitor well/ piezometer abandonment & installation, groundwater monitoring, Health & Safety Supervision | Hazardous Waste Operations and Emergency Response (HAZWOPER) 40hr and 8hr refresher 29CFR 1910.120 [e] [8] & 1926.65 [e] [8] | Condor LEA | 1/26/2006 40hr 3/4/2009 8hr | Richard D'Amico | Field Scientist LEA | LEA Office, Plainville CT |
| Waste management; offer waste for off-site disposal | Hazardous Waste Operations and Emergency Response (HAZWOPER) 40hr and 8hr refresher 29CFR 1910.120 [e] [8] & 1926.65 [e] [8] | NE Consortium | 6/16/2009 40hr | Jeffrey Dow | Technical Specialist LEA | LEA Office, Plainville CT |
| Direct construction operations | Hazardous Waste Operations and Emergency Response (HAZWOPER) 40hr and 8hr refresher 29CFR 1910.120 [e] [8] & 1926.65 [e] [8] | Condor LEA | 1/26/2006 40hr 3/4/2009 8hr | Pierre Lalliberte | Construction Superintendent, Loureiro Contractors, Inc. (LCI) | LEA Office, Plainville CT |
| Construction Quality Assurance | Hazardous Waste Operations and Emergency Response (HAZWOPER) 40hr and 8hr refresher 29CFR 1910.120 [e] [8] & 1926.65 [e] [8] | Condor LEA | 2/3/2000 40hr 3/4/2009 8hr | Steve Murdock | Construction Engineer LEA | LEA Office, Plainville CT |
| **Project Function** | **Specialized Training – Title or Description of Course** | **Training Provider** | **Training Date** | **Personnel/Groups Receiving Training** | **Personnel Titles/ Organizational Affiliation** | **Location of Training Records/Certificates[1]** |
| Project Management | Hazardous Waste Operations and Emergency Response (HAZWOPER) 40hr and 8hr refresher 29CFR 1910.120 [e] [8] & 1926.65 [e] [8] | GTI LEA | 6/8/1987 40hr 4/9/2007 8hr | Dave Scotti | Project Manager LEA | LEA Office, Plainville CT |

| | | | | | | |
|---|---|---|---|---|---|---|
| Air monitoring; monitor well/ piezometer abandonment & installation, groundwater monitoring, Health & Safety Supervision | Hazardous Waste Operations and Emergency Response (HAZWOPER) 40hr and 8hr refresher 29CFR 1910.120 [e] [8] & 1926.65 [e] [8] | ATC Associates LEA | 4/15/2005 40hr 3/4/2009 8hr | Keith Volkert | Field Geologist LEA | LEA Office, Plainville CT |
| Air monitoring; monitor well/ piezometer abandonment & installation, groundwater monitoring, Health & Safety Supervision | Hazardous Waste Operations and Emergency Response (HAZWOPER) 40hr and 8hr refresher 29CFR 1910.120 [e] [8] & 1926.65 [e] [8] | Condor LEA | 11/4/2004 40hr 3/31/2009 8hr | Mark Winbourne | Field Geologist LEA | LEA Office, Plainville CT |
| Direct construction operations | Hazardous Waste Operations and Emergency Response (HAZWOPER) 40hr and 8hr refresher 29CFR 1910.120 [e] [8] & 1926.65 [e] [8] | | | Bob Gordon | Construction Superintendent, Loureiro Contractors, Inc. (LCI) | LEA Office, Plainville CT |

[1]If training records and/or certificates are on file elsewhere, document their location in this column. If training records and/or certificates do not exist or are not available, then this should be noted.

**QAPP Worksheet #15**
(UFP-QAPP Manual Section 2.8.1)
Complete this worksheet for each matrix, analytical group, and concentration level. Identify the target analytes/contaminants of concern and project-required action limits. Next, determine the quantitation limits that must be met to achieve the project quality objectives. Finally, list the published and achievable detection and quantitation limits for each analyte.

## Reference Limits and Evaluation Table

Matrix: Water

Analytical Group: Dioxins

| Analyte | CAS Number | Project Action Limit (ug/L) | Project Quantitation Limit Goal[2] (ug/L) | Laboratory-specific | |
|---|---|---|---|---|---|
| | | | | Quantitation Limits (pg/L) | EDLs[1] |
| 2,3,7,8-TCDF | 51207-31-9 | | 10 | 10 | EDL |
| 2,3,7,8-TCDD | 1746-01-6 | 10 | 10 | 10 | EDL |
| 1,2,3,7,8-PeCDF | 57117-41-6 | | 50 | 50 | EDL |
| 2,3,4,7,8-PeCDF | 57117-31-4 | | 50 | 50 | EDL |
| 1,2,3,7,8-PeCDD | 40321-76-4 | | 50 | 50 | EDL |
| 1,2,3,4,7,8-HxCDF | 70648-26-9 | | 50 | 50 | EDL |
| 1,2,3,6,7,8-HxCDF | 57117-44-9 | | 50 | 50 | EDL |
| 2,3,4,6,7,8-HxCDF | 60851-34-5 | | 50 | 50 | EDL |
| 1,2,3,7,8,9-HxCDF | 72918-21-9 | | 50 | 50 | EDL |
| 1,2,3,4,7,8-HxCDD | 39227-28-6 | | 50 | 50 | EDL |
| 1,2,3,6,7,8-HxCDD | 57653-85-7 | | 50 | 50 | EDL |
| 1,2,3,7,8,9-HxCDD | 19408-74-3 | | 50 | 50 | EDL |
| 1,2,3,4,6,7,8-HpCDF | 67562-39-4 | | 50 | 50 | EDL |
| 1,2,3,4,7,8,9-HpCDF | 55673-89-7 | | 50 | 50 | EDL |
| 1,2,3,4,6,7,8-HpCDD | 35822-46-9 | | 50 | 50 | EDL |
| OCDF | 39001-02-0 | | 100 | 100 | EDL |
| OCDD | 3268-87-9 | | 100 | 100 | EDL |
| TEQ | | | | | |

1 Estimated Detection Limit (EDL) - For each chemical not detected, an EDL is calculated. The sample-specific EDL is an estimate made by the laboratory of the concentration of a given chemical that would have to be present to produce a signal with a peak height of at least 2.5 times the background signal level. The estimate is specific to a particular analysis of the sample and will be affected by sample size, dilution, and so forth. Because of the toxicological significance of dioxins, the EDL value is reported for non-detected chemicals rather than reporting the quantitation limit (QL).

**QAPP Worksheet #18 (UFP-QAPP Manual Section 3.1.1) -- Sampling Locations and Methods/SOP Requirements Table**

List all site locations that will be sampled and include sample/ID number, if available. (Provide a range of sampling locations of ID numbers if a site has a large number.) Specify matrix and, if applicable, depth at which samples will be taken. Only a short reference for the sampling location rationale is necessary for the table. The text of the QAPP should clearly identify the detailed rationale associated with each reference. Complete all required information, using additional worksheets if necessary

| **Sampling Location / ID Number** | **Matrix** | **Depth** (units) | **Analytical Group** | **Concentration Level** | **Number of Samples** (identify field duplicates) | **Sampling SOP Reference**[1] | **Rationale for Sampling Location** |
|---|---|---|---|---|---|---|---|
| MW-LEA-04 | Groundwater | 0-4 feet below river bed | Dioxins/Furans | Low Level | 2 ( 1 filtered, 1 unfiltered) + Duplicate | 10039 | Groundwater/ Surface Water Transition Zone |
| MW-LEA-05 | Groundwater | 0-4 feet below river bed | Dioxins/Furans | Low Level | 2 ( 1 filtered, 1 unfiltered) | 10039 | Groundwater/ Surface Water Transition Zone |
| | | | | | | | |

[1]Specify the appropriate letter or number from the Project Sampling SOP References table (Worksheet #21).

**QAPP Worksheet #19**

(UFP-QAPP Manual Section 3.1.1)
For each matrix, analytical group, and concentration level, list the analytical and preparation method/SOP and associated sample volume, container specifications, preservation requirements, and maximum holding time.

**Analytical SOP Requirements Table**

| Matrix | Analytical Group | Concentration Level | Analytical and Preparation Method/SOP Reference[1] | Sample Volume | Containers (number, size, and type) | Preservation Requirements (chemical, temperature, light protected) | Maximum Holding Time (preparation/ analysis) |
|---|---|---|---|---|---|---|---|
| Water | Dioxins | Method 8290 WS-IDP-0005 / WS-ID-0005 | 1 x 1-L Amber Glass Bottles | 1 L | Cool to 4±2°C | 30 days for extraction and 40 days for analysis. | Water |
| | | | | | | | |
| | | | | | | | |
| | | | | | | | |
| | | | | | | | |
| | | | | | | | |

[1]Specify the appropriate reference letter or number from the Analytical SOP References table (Worksheet #23).

**QAPP Worksheet #20**
(UFP-QAPP Manual Section 3.1.1)
Summarize by matrix, analytical group, and concentration level the number of field QC samples that will be collected and sent to the laboratory.

**Field Quality Control Sample Summary Table**

| **Matrix** | **Analytical Group** | **Concentration Level** | **Analytical and Preparation SOP Reference[1]** | **No. of Sampling Locations[2]** | **No. of Field Duplicate Pairs** | **Inorganic No. of MS** | **No. of Field Blanks** | **No. of Equip. Blanks** | **No. of PT Samples** | **Total No. of Samples to Lab** |
|---|---|---|---|---|---|---|---|---|---|---|
| Groundwater (Unfiltered) | Dioxins | Low Level | WS-ID-0005 | 2 | 0 | 0 | 0 | 0 | 1 | 3 |
| Groundwater (Filtered) | Dioxins | Low Level | WS-ID-0005 | 2 | 1 | 0 | 0 | 1 | 0 | 4 |
| | | | | | | | | | | |
| | | | | | | | | | | |
| | | | | | | | | | | |
| | | | | | | | | | | |
| | | | | | | | | | | |
| | | | | | | | | | | |

[1]Specify the appropriate reference letter or number from the Analytical SOP References table (Worksheet #23).
[2]If samples will be collected at different depths at the same location, count each discrete sampling depth as a separate sampling location or station.

**QAPP Worksheet #21**
(UFP-QAPP Manual Section 3.1.2)
List all SOPs associated with project sampling including, but not limited to, sample collection, sample preservation, equipment cleaning and decontamination, equipment testing, inspection and maintenance, supply inspection and acceptance, and sample handling and custody. Include copies of the SOPs as attachments or reference all in the QAPP. Sequentially number sampling SOP references in the Reference Number column. The reference number can be used throughout the QAPP to refer to a specific SOP.

**Project Sampling SOP References Table**

| SOP ID Reference Number | Title, Revision Date and/or Number | Originating Organization | Equipment Type | Modified for Project Work? (Y/N) | Comments |
|---|---|---|---|---|---|
| 10005 | *Loureiro Engineering Associates, Inc. Standard Operating Procedure for Quality Assurance/Quality Control Measures for Field Activities* | LEA | None | N | |
| 10007 | *Loureiro Engineering Associates, Inc. Standard Operating Procedure for Installing and Developing Monitoring Wells and Piezometers* | LEA | Varies | N | |
| 10030 | *Loureiro Engineering Associates, Inc. Standard Operating Procedure for Processing Performance Evaluation Samples* | LEA | None | N | |
| 10038 | *Loureiro Engineering Associates, Inc. Standard Operating Procedure for Documentation and Integrity of Field Sampling Activities* | LEA | None | N | |

| Reference Number | Title, Revision Date and/or Number | Originating Organization | Equipment Type | Modified for Project Work? (Y/N) | Comments |
|---|---|---|---|---|---|
| 10039 | *Loureiro Engineering Associates, Inc. Standard Operating Procedure for Low Flow (Low Stress) Liquid Sample Collection and Field Analysis* | LEA | Varies | Y | |
| 10041 | *Loureiro Engineering Associates, Inc. Standard Operating Procedure for Monitoring Well Abandonment* | LEA | Varies | N | |
| 10059 | *Loureiro Engineering Associates, Inc. Standard Operating Procedure for Management of Investigation-Derived Waste* | LEA | Varies | N | |
| | | | | | |
| | | | | | |
| | | | | | |
| | | | | | |
| | | | | | |
| | | | | | |

**QAPP Worksheet #22**
(UFP-QAPP Manual Section 3.1.2.4)
Identify all field equipment and instruments (other than analytical instrumentation) that require calibration, maintenance, testing, or inspection and provide the SOP reference number for each type of equipment. In addition, document the frequency of activity, acceptance criteria, and corrective action requirements on the worksheet.

**Field Equipment Calibration, Maintenance, Testing, and Inspection Table**

| Field Equipment | Calibration Activity | Maintenance Activity | Testing Activity | Inspection Activity | Frequency | Acceptance Criteria | Corrective Action | Responsible Person | SOP Reference[1] |
|---|---|---|---|---|---|---|---|---|---|
| YSI Flow – Through Cell | pH | NA | NA | NA | Prior to use, end of day per manufacturer instructions | ± 0.1 Units | Recalibrate | Field Lead | 10039 |
| YSI Flow – Through Cell | Conductivity | NA | NA | NA | Prior to use, end of day per manufacturer instructions | ± 10% | Recalibrate | Field Lead | 10039 |
| YSI Flow – Through Cell | Oxidation-Reduction Potential | NA | NA | NA | Prior to use, end of day per manufacturer instructions | ± 10 % | Recalibrate | Field Lead | 10039 |
| YSI Flow – Through Cell | Dissolved Oxygen | NA | NA | NA | Prior to use, end of day per manufacturer instructions | ± 10% | Recalibrate | Field Lead | 10039 |
| Turbidimeter | Turbidity | NA | NA | NA | Prior to use, end of day per manufacturer instructions | ± 10% | Recalibrate | Field Lead | 10039 |
| | | | | | | | | | |
| | | | | | | | | | |
| | | | | | | | | | |
| | | | | | | | | | |

[1]Specify the appropriate reference letter or number from the Project Sampling SOP References table (Worksheet #21).

**QAPP Worksheet #23**
(UFP-QAPP Manual Section 3.2.1)
List all SOPs that will be used to perform on-site or off-site analysis. Indicate whether the procedure produces screening or definitive data. Sequentially number analytical SOP references in the Reference Number column. Include copies of the SOPs as attachments or reference in the QAPP. The reference number can be used throughout the QAPP to refer to a specific SOP.

**Analytical SOP References Table**

| Reference Number | Title, Revision Date, and/or Number | Definitive or Screening Data | Analytical Group | Instrument | Organization Performing Analysis | Modified for Project Work? (Y/N) |
|---|---|---|---|---|---|---|
| WS-ID-0005 | Analysis of Samples for Polychlorinated Dioxins and Furans by HRGC/HRMS (Revision 7, Effective 10/2/2008) | Definitive | Water Dioxins | GC/HRMS | TestAmerica West Sacramento | N |
| | | | | | | |
| | | | | | | |
| | | | | | | |
| | | | | | | |
| | | | | | | |

**QAPP Worksheet #24**
(UFP-QAPP Manual Section 3.2.2)
Identify all analytical instrumentation that requires calibration and provide the SOP reference number for each. In addition, document the frequency, acceptance criteria, and corrective action requirements on the worksheet.

**Analytical Instrument Calibration Table**

| Instrument | Calibration Procedure | Frequency of Calibration | Acceptance Criteria | Corrective Action (CA) | Person Responsible for CA | SOP Reference |
|---|---|---|---|---|---|---|
| GC/HRMS | Tune / Mass Resolution Check (PFK) | At the beginning and the end of each 12-hour period of analysis. | Resolving power ≥ 10,000 at m/z=304.9842 & m/z=380.9760 + 5ppm of expected mass. Lock-mass ion between lowest and highest masses for each descriptor and level of reference ≤ 10% full-scale deflection. | Retune instrument & verify. Assess data for impact if end resolution is less than 10,000l narrate or re-inject as necessary. | **Lab Manager / Analyst** [b] | **WS-ID-0005** |

| Instrument | Calibration Procedure | Frequency of Calibration | Acceptance Criteria | Corrective Action (CA) | Person Responsible for CA | SOP Reference |
|---|---|---|---|---|---|---|
| SW8290 HRGC/HRMS | GC Column Performance Check (CPSM/WDM per method) | Prior to ICAL or calibration verification. | Peak separation between 2,3,7,8-TCDD and other TCDD isomers result in a valley of ≤ 25%; and identification of all first and last eluters of the eight homologue retentention time windows and documentation by labeling (F/L) on the chromatogram; and absolute retention times for switching from one homologous series to the next ≥ 10 seconds for all components of the mixture. | 1) Readjust windows.<br>2) Evaluate system.<br>3) Perform maintenance.<br>4) Reanalyze CPSM.<br>5) No corrective action is necessary if 2,3,7,8-TCDD is not detected and the % valley is greater than 25%. | **Lab Manager / Analyst** [b] | **WS-ID-0005** |
| GC/HRMS | Minimum five-point initial calibration for target analytes, lowest concentration standard at or near the reporting limit. (ICAL) | ICAL prior to sample analysis, as needed by the failure of calibration verification, and when a new lot is used as a standard source for calibration verification, internal standard or recovery standard solutions. | RSD ≤ 20% for response factors for 17 unlabelled isomers & 9 labeled IS, and ion abundance ratios within limits specified in SOP; and S/N ≥ 10:1for target analytes. | Correct problem, then repeat initial calibration | **Lab Manager / Analyst** [b] | **WS-ID-0005** |

| Instrument | Calibration Procedure | Frequency of Calibration | Acceptance Criteria | Corrective Action (CA) | Person Responsible for CA | SOP Reference |
|---|---|---|---|---|---|---|
| GC/HRMS | Calibration Verification (CCV) | At the beginning of each 12-hour period, and at the end of each analytical sequence. | Ion abundance ratios in accordance with SOP; and RF (unlabelled standards) within ± 20%D of average RF from ICAL; and RF (labeled standards) within ± 30%D of average RF from ICAL. | Correct problem, repeat calibration verification. If fails, repeat ICAL and reanalyze all samples analyzed since last successful CCV End of Run CCV: If RF (unlabelled standards) > ± 20%D and ≤ ± 25%D and/or RF (labeled standards) > ± 30%D and ≤ ± 35%D of the average RF from ICAL use mean RF from bracketing CCVs to quantitate impacted samples. If bracketing CCVs differ by more than 25% RPD (unlabelled) or 35% RPD (labeled), run a new ICAL within 2 hours, and re-quantitate samples. Otherwise, reanalyze samples with positive detections. | **Lab Manager / Analyst** [b] | **WS-ID-0005** |

[b] *The analyst initiates the corrective action and the lab manager and analyst are responsible for the corrective action.*

**QAPP Worksheet #25**
(UFP-QAPP Manual Section 3.2.3)
Identify all analytical instrumentation that requires maintenance, testing, or inspection and provide the SOP reference number for each. In addition, document the frequency, acceptance criteria, and corrective action requirements on the worksheet.

## Analytical Instrument and Equipment Maintenance, Testing, and Inspection Table

| Instrument/ Equipment | Maintenance Activity | Testing Activity | Inspection Activity | Frequency | Acceptance Criteria | Corrective Action | Responsible Person | SOP Reference[1] |
|---|---|---|---|---|---|---|---|---|
| GC/HRMS | Parameter Setup | Physical check | Physical check | Initially; prior to DCC | Correct Parameters | Reset if incorrect | TestAmerica Chemist | WS-MS-0005 |
| GC/HRMS | Tune Check | Instrument Performance | Conformance to instrument tuning. | Initially; prior to DCC | Compliance to ion abundance criteria | Correct the problem and repeat tune check | TestAmerica Chemist | WS-MS-0005 |
| | | | | | | | | |
| | | | | | | | | |
| | | | | | | | | |

[1]Specify the appropriate reference letter or number from the Analytical SOP References table (Worksheet #23).

## QAPP Worksheet #28
(UFP-QAPP Manual Section 3.4)

# QC Samples Table

| | |
|---|---|
| Matrix | Groundwater |
| Analytical Group | Dioxins by EPA SW-846 Method 829A0 |
| Concentration Level | Low-Level |
| Sampling SOP | 10039 |
| Analytical Method/SOP Reference | WS-ID-0005 |
| Sampler's Name | TBD |
| Field Sampling Organization | LEA |
| Analytical Organization | TestAmerica –West Sacramento |
| No. of Sample Locations | 2 |

| QC Sample: | Frequency/Number | Method/SOP QC Acceptance Limits | Corrective Action | Person(s) Responsible for Corrective Action | Data Quality Indicator (DQI) | Measurement Performance Criteria |
|---|---|---|---|---|---|---|
| Method Blank | One per preparation batch | No target analytes detected ≥ LOD or ≥ 20% of the associated regulatory limit or ≥ 5% of the sample result for the analyte, whichever is greater. (OCDD is considered a common laboratory contaminant and treated accordingly). | Correct problem. If required, reprep and reanalyze method blank and all samples processed with the contaminated blank. "Totals" are not considered "target analytes" – no corrective action or flagging is necessary for "totals". | Chemist | Accuracy/Bias Contamination | No target analytes ≥ LOD. |
| Initial Calibration | As specified by Method/Analytical SOP | Recoveries within limits specified by Method/Analytical SOP | Correct problem, then reprep and reanalyze | Chemist | Accuracy | All compounds within QC limits |
| Continuing Calibration | 1 per analytical shift and as specified by Method/Analytical SOP | Recoveries within limits specified by Method/Analytical SOP | Correct problem, then reprep and reanalyze | Chemist | Accuracy | All compounds within QC limits |
| Internal Standard Spike | Every field sample, standard and QC sample | % recovery for each IS in the original sample (prior to dilutions) must be within 40-1235%, per method. | Correct problem, then reprep and reanalyze the samples with failed IS. | Lab Manager / Analyst | Precisions and Accuracy/Bias | Meets all EPA Method requirements |
| Laboratory Control Sample (LCS) | One per sample preparation batch | QSM or laboratory statistically derived control limits | Correct problem, the reprep and reanalyze the LCS and all samples in the associated preparatory batch for failed analytes, if sufficient sample material is available. | Lab Manager / Analyst | Accuracy/Bias Contamination | QSM or laboratory statistically derived control limits |

| | |
|---|---|
| Matrix | Groundwater |
| Analytical Group | Dioxins by EPA SW-846 Method 829A0 |
| Concentration Level | Low-Level |
| Sampling SOP | 10039 |
| Analytical Method/SOP Reference | WS-ID-0005 |
| Sampler's Name | TBD |
| Field Sampling Organization | LEA |
| Analytical Organization | TestAmerica –West Sacramento |
| No. of Sample Locations | 2 |

| QC Sample: | Frequency/Number | Method/SOP QC Acceptance Limits | Corrective Action | Person(s) Responsible for Corrective Action | Data Quality Indicator (DQI) | Measurement Performance Criteria |
|---|---|---|---|---|---|---|
| MS/MSD | One MS/MSD per analytical/preparation batch | QSM or laboratory statistically derived control limits, RPD ≤ 20%. | Identify problem; if not related to matrix interference, re-extract and reanalyze MS/MSD and all associated batch samples in accordance with DoD QSM requirements | Lab Manager / Analyst | Precision and Accuracy/Bias | QSM or laboratory statistically derived control limits |
| Equipment Blank | 1 per sampling event | No target analytes detected ≥ LOD | Qualify data as necessary per data validation guidance | Data Validator | Accuracy/Bias Contamination | No target analytes ≥ LOD. |
| Temperature Blank | 1 per sample cooler | 4° ± 2°C | Qualify data as necessary per data validation guidance | Data Validator | Accuracy/Bias Preservation | Samples received within acceptable temperature range |
| Performance Evaluation Samples (Double Blind) | 1 | Per documented QC acceptance limits | Qualify data as necessary per data validation guidance | Data Validator | Accuracy/Bias | All compounds reported within QC acceptance limits with no false positives/false negatives |

**Supplemental QAPP Worksheet #28.1**
**Recovery & Precision Limits[1]**

| Matrix: Water | | |
|---|---|---|
| Analytical Group: Dioxins | | |
| **Analyte** | **Precision (RPD)** | **Recovery Limits (LCS/MS/MSD)[1]** |
| 2,3,7,8-TCDF | 20 | 70 - 140 |
| 1,2,3,7,8-PeCDF | 20 | 75 - 135 |
| 2,3,4,7,8-PeCDF | 20 | 70 - 135 |
| 1,2,3,4,7,8-HxCDF | 20 | 70 - 135 |
| 1,2,3,6,7,8-HxCDF | 20 | 75 - 135 |
| 1,2,3,7,8,9-HxCDF | 20 | 75 - 140 |
| 2,3,4,6,7,8-HxCDF | 20 | 70 -140 |
| 1,2,3,4,6,7,8-HpCDF | 20 | 75 - 135 |
| 1,2,3,4,7,8,9-HpCDF | 20 | 80 - 135 |
| OCDF | 20 | 75 - 140 |
| 2,3,7,8-TCDD | 20 | 70 - 130 |
| 1,2,3,7,8-PeCDD | 20 | 70 - 140 |
| 1,2,3,7,8,9-HxCDD | 20 | 70 - 145 |
| 1,2,3,4,7,8-HxCDD | 20 | 65 - 145 |
| 1,2,3,6,7,8-HxCDD | 20 | 70 - 140 |
| 1,2,3,4,6,7,8-HpCDD | 20 | 75 - 140 |
| OCDD | 20 | 70 - 135 |

[1]*The QSM does not list recovery limits for Method 8290. The limits provided above are based on an evaluation of the laboratory historical control limits. These are subject to change as further evaluation is performed. Limits in use at the time of sample analysis are available from the laboratory.*

# APPENDIX B

## Loureiro Engineering Associates, Inc. Standard Operating Procedures

**Loureiro Engineering Associates, Inc.**
**Standard Operating Procedure**
**for**
**Quality Assurance/Quality Control Measures**
**for**
**Field Activities**

**SOP ID: 10005**
**Date Initiated: 02/20/90**
**Revision No. 004: 12/31/01**

**Approved By:** *<u>/s/ Jeffrey J. Loureiro</u>* *<u>12/19/01</u>*
**Jeffrey J. Loureiro** **Date**
**President**

*<u>/s/ Nick D. Skoularikis</u>* *<u>12/19/01</u>*
**Nick D. Skoularikis** **Date**
**Director of Quality**

## REVISION RECORD

| Rev # | Date | Additions/Deletions/Modifications |
|---|---|---|
| Initial Issue | 02/20/90 | |
| 001-003 | - | No record. |
| 004 | 12/31/01 | Updated to reflect new SOP format.<br>Added section 4.3, Results Evaluation.<br>Minor revisions throughout. |

**Loureiro Engineering Associates, Inc.**
**Standard Operating Procedure**
**for**
**Quality Assurance/Quality Control Measures**
**for**
**Field Activities**

## 1. Statement of Purpose

This document describes procedures to be followed for proper Quality Assurance Quality Control (QA/QC) practices which shall incorporate all activities associated with sampling tool and instrument preparation, field measurements and sampling, proper documentation of field and post-field activities, QC sample preparation, chain-of-custody protocol and laboratory analytical procedures. The use of specific QA/QC measures is project-specific as defined in the project work plan. This standard operating procedure (SOP) was adopted in accordance with the Environmental Protection Agency (EPA) document *Test Methods for Evaluating Solid Waste, Physical/Chemical Methods* (SW-846).

## 2. Definitions

2.1. Trip Blank: An aliquot of organic-free water or equivalent neutral reference material carried into the field but not exposed.

2.2. Equipment Blank: An aliquot of analyte-free deionized water processed through all sample collection equipment.

2.3. Replicate Samples: Samples that have been divided into two or more portions in the field.

2.4. Collocated Samples: Independent samples collected under identical circumstances in a way that they are equally representative of the parameter of interest.

2.5. Performance Evaluation (PE) Sample: A sample that mimics actual samples in all possible aspects, except that its composition is known to the auditor and unknown to the analyst.

## 3. Equipment

None

## 4. Procedure

### 4.1. General

4.1.1. All QA/QC sample preparation procedures shall be properly documented including:

- Name of person(s) or laboratory involved in sample preparation.
- Reagents used.
- Sample number.
- Analyses required.
- Concentration calculations.
- Accuracy of measurements.
- Number, type, size of containers used.
- Preservation method.
- Date and time of sample preparation.

4.1.2. All information shall be included in the field logbook and/or appropriate field forms, but not necessarily in the chain-of-custody record except as needed for proper sample identification and analysis. Blind sample numbers are being used in order not to disclose the nature of the sample to the laboratory. No information that would identify the sample as a QA/QC sample shall be included in the chain-of-custody record.

4.1.3. At the conclusion of each sampling day, a quality control review shall be conducted using the Field Quality Review Checklist and the Daily Field Report.

### 4.2. QC Sample Preparation

4.2.1. Trip Blank

4.2.1.1. Contaminated trip blanks may indicate contamination of the samples during the field trip or shipment to the lab, cross-contamination between the samples, contaminated sample vials, or improper handling.

4.2.1.2. Trip blanks shall be used only with samples that are to be analyzed for volatile organic compounds.

4.2.1.3. One trip blank shall be included per shipping container (cooler) carrying sample soil and/or groundwater samples that are to be analyzed for volatile organic compounds

4.2.1.4. Trip blanks are prepared using analyte-free deionized organic-free water prior to field activities associated with the sampling event, usually by the laboratory providing the sampling containers. Each trip blank is placed in a 40-ml glass VOA vial and is carried in the same shipping container as the sample(s). Trip blanks should not be opened at any time during transport.

4.2.2. Equipment Blank

4.2.2.1. The purpose of an equipment/rinsate blank is to determine if decontamination procedures were adequate or if any of the equipment might contribute contaminants to the sample.

4.2.2.2. An equipment blank is prepared by running analyte-free deionized water through all sample collection equipment (bailers, pumps, filters, split-spoon) and placing it in the appropriate sample containers for analysis. If equipment has been decontaminated in the field, the equipment blank shall be collected after decontamination procedures have been performed.

4.2.2.3. Equipment blanks shall be used when sampling surface water, groundwater, soil, and sediment.

4.2.2.4. One equipment blank shall be collected for each sample bottle/preservation technique/analysis procedure per matrix per sampling event, or as otherwise specified in project-specific documents.

4.2.3. Replicate Samples

4.2.3.1. Replicate samples provide precision information on handling, shipping, storage, preparation and laboratory analysis.

4.2.3.2. Replicate samples are samples that have been divided into two or more portions in the field. An example of a replicate sample is two identical sample bottles filled with water from the same bailer retrieval. To ensure homogeneity, the bailer should be emptied into a clean, decontaminated beaker used exclusively

for the purpose and containing sufficient volume for both sample containers, and from that into the sample containers.

4.2.3.3. Replicate samples cannot be used when sampling for volatile organic compounds.

4.2.3.4. One replicate sample shall be obtained for each sample bottle/preservation technique/analysis procedure per sampling event or one out of every 20 samples, unless collocated samples are used (see below), or as otherwise specified in project-specific documents.

4.2.4. Collocated Samples

4.2.4.1. Collocated samples provide precision information on sample acquisition, homogeneity, handling, shipping, storage, preparation and laboratory analysis.

4.2.4.2. Collocated samples are independent samples collected in such a way so that presumably they are equally representative of the parameter of interest. Examples of collocated samples are groundwater samples collected sequentially, soil core samples collected side-by-side, or air samples collected essentially at the same time from the same manifold.

4.2.4.3. Collocated samples are especially useful when sampling for volatile organic compounds, for which replicate samples cannot be used.

4.2.4.4. Collocated samples shall be obtained for each sample bottle/preservation technique/analysis procedure per sampling event or one out of every 20 samples, unless replicate samples are used (see above), or as otherwise specified in project-specific documents.

4.2.5. Split Samples

4.2.5.1. The purpose of split samples is to provide an assessment of the laboratory analytical procedure.

4.2.5.2. Split samples are collocated or replicate samples sent to two (or more) different laboratories.

4.2.5.3. Split samples can be used with any sample media. Split samples can be used in conjunction with spiked samples (see

below). In case contradictory results are obtained from the samples split between different laboratories, the spiked samples can be used to verify the analytical data (provided that the spiked samples were properly prepared and the appropriate documentation is available).

4.2.5.4. When used, one split/spiked sample per sample bottle/preservation technique/analysis procedure per sampling event or every 20 samples shall be included, or as specified in project-specific documents.

4.2.6. Spiked Samples

4.2.6.1. The purpose of spiked samples is to provide information on the precision of the laboratory analytical procedure. However, besides a wrong preparation, several other sources of error exist such as analyte stability, holding time and interactions with the sample matrix.

4.2.6.2. Spiked samples are samples spiked with the contaminants of interest. The compounds used for spiking should be of the same chemical group as the contaminants being investigated, but they do not have to be the exact chemical compounds. Spiking should be carefully designed and performed prior to the field investigations. Field matrix spikes are not generally recommended because of the high level of technical expertise required for proper preparation and documentation.

4.2.6.3. Can be used with any sample media, however, liquid matrices are preferred due to uniformity of mixing.

4.2.6.4. When used, one split/spiked sample per sample bottle/preservation technique/analysis procedure per sampling event or every 20 samples shall be included, or as otherwise specified in project-specific documents. In order to ensure defensible data, performance evaluation (PE) samples, prepared by an independent vendor, are typically being used. The ordering and handling procedures and record keeping requirements are discussed in Loureiro Engineering Associates, Inc. (LEA's) *SOP for Preparation of PE Samples* (SOP 10030).

4.3. Result Evaluation

4.3.1. The analytical results on QA/QC samples should be evaluated along with the remaining analytical data as follows:

4.3.1.1. No constituents should be detected in the trip blank or equipment blank.

4.3.1.2. The relative percent differences (RPDs) shall be computed for all constituents detected in both duplicate samples used.

The RPD between two measurements (e.g., M1 and M2) is calculated as follows:

$$RPD = \frac{|M1 - M2|}{(M1 + M2)/2} \times 100\%$$

4.3.1.3. Any deviations in the performance evaluation samples shall be brought to the attention of the laboratory. An investigation shall then be performed by the laboratory of the method used, laboratory QA/QC procedures followed, and computations performed. The laboratory shall report the results of their investigation and any corrective actions taken.

## 5. References

5.1. EPA, *Test Methods for Evaluating Solid Waste, Physical/Chemical Methods* (SW-846).

END OF DOCUMENT

**Loureiro Engineering Associates, Inc.**
**Standard Operating Procedure**
**for**
**Installing and Developing Monitoring Wells and Piezometers**

**SOP ID: 10007**
**Date Initiated: 02/20/90**
**Revision No. 006: 08/12/02**

**Approved By:** _____ 8/12/02
**Joseph T. Trzaski** **Date**
**Senior Scientist**

_____ 08/12/02
**Nick D. Skoularikis** **Date**
**Director of Quality**

## REVISION RECORD

| Rev # | Date | Additions/Deletions/Modifications |
|---|---|---|
| Initial Issue | 02/20/90 | |
| 001-004 | - | No record. |
| 005 | 12/31/01 | Formatting and minor revisions throughout. |
| 006 | 08/12/02 | Added section on utility clearance. |

# Loureiro Engineering Associates, Inc.
# Standard Operating Procedure
# for
# Installing and Developing
# Monitoring Wells and Piezometers

## 1. Purpose and Scope

This standard operating procedure (SOP) is designed to describe the methods and procedures used to install and develop monitoring wells and piezometers in a water-table aquifer. Monitoring well and piezometer installation and development shall generally follow the guidelines presented in the "*Handbook of Suggested Practices for the Design and Installation of Groundwater Monitoring Wells*" (United States Environmental Protection Agency (EPA), 1989), the "*RCRA Ground Water Monitoring Technical Enforcement Guidance Document*" (EPA, 1986), and any state or local guidance, or regulatory documents which are available.

This SOP describes general procedures and guidelines to be followed or consulted for the proper methods to be used when installing monitoring wells or piezometers in unconsolidated deposits and bedrock. Because each site is unique and the purpose of the monitoring wells may vary from installation to installation, no definitive rules can be established. Throughout this SOP reference to monitoring wells is also intended to mean piezometers unless specifically indicated otherwise. This SOP also applies to monitoring wells and piezometers installed by Geoprobe® direct push technologies.

## 2. Definitions

**Geoprobe® Direct Push Machine**: A vehicle-mounted, hydraulically-powered machine that uses static force and percussion to advance small-diameter sampling tools into the subsurface for collecting soil, vapor , or groundwater samples. Geoprobe® machines ad tools are manufactured by Geoprobe Systems®, Salina, Kansas.

**Prepacked Well Screen** (0.5 in and 1.5 in): An assembly consisting of a clotted polyvinyl chloride (PVC) pipe surrounded by environmental grade sand contained within a stainless steel wire mesh cylinder. The inner component of the prepacked screen is a flush-threaded, 0.5 inch Schedule 80 PVC pipe with 0.01 in slots. (Alternatively, a 1.5 inch Schedule 80 PVC pipe can be used). Stainless steel wire mesh with a pore size of 0.011 in makes up the outer component of the prepack. The space between the inner slotted pipe and outer wire mesh is filled with 20/40 mesh silica sand. Geoprobe®

prepacked screens are available in sections of various lengts (3 ft or 5 ft)and a nominal inside diameter of 0.5 in or 1.5 in.

## 3. Equipment and Decontamination

3.1. Equipment Supplied by the Drilling Contractor:

- Drilling rig.
- Monitoring well casing.
- Monitoring well screen.
- Bottom caps, plugs or points.
- Centering guides (if they are to be used).
- Filter pack sand.
- Bentonite.
- Cement-bentonite grout.
- Mud-scale to measure densities.
- Protective casing or road box.
- Steam-cleaning apparatus and supplies.
- Suitable containers (e.g., Department of Transportation (DOT)-approved 55-gallon drums with liners) for soil cuttings, well development water, and water generated from steam cleaning.
- Metal stamps for permanently marking wells.
- All necessary permits and licenses.
- If the Geoprobe® is used for well installation, Geoprobe®-specific equipment for well installation.

3.2. Equipment Supplied by Loureiro Engineering Associates, Inc. (LEA)

- Field forms.
- Indelible markers.
- Lock(s) and keys.
- Well development equipment (pumps, surge block, bailers, etc.).
- Analytical instrumentation (Analytical instrumentation includes, but is not necessarily limited to turbidity meters, pH meters, specific conductivity meters, and thermometers.).
- Calibration supplies for all analytical instrumentation, as appropriate.
- Alconox®, or other non-phosphate laboratory grade detergent.
- 5-gallon buckets.
- Decontamination brushes.
- Distilled, de-ionized water.
- Decontamination fluids (<10% methanol in water, 100% n-hexane, and

10% nitric acid).

3.3. Equipment Selection and Specifications

The following specifications will be followed:

**Cement-Bentonite Grout**: If cement-bentonite is utilized, the cement-bentonite grout will be a mixture of 95 pounds of Type II Portland cement, 4 to 6 pounds of powdered sodium bentonite, and 5 gallons of potable water. The bentonite must be thoroughly mixed with the water before the cement is added. The cement bentonite grout shall have a density of 14 pounds/gallon.

**Filter Pack Sand**: All filter pack sand will be clean, well-rounded silica sand, in factory-sealed bags. The sand will conform to the most recent version of the American Water Works Association (AWWA) Standard AWWA/ANSI A100 for water wells. In brief, the standard states that filter pack sand will have an average specific gravity of 2.5 with not more than 1% of the material having a specific gravity less than 2.25. Thin, flat or elongated particles shall not exceed 2% of the material, no more than 5% of the material shall be soluble in hydrochloric acid, and the material shall be washed and free of shale, mica, clay, dirt, loam, and organic impurities.

**Bentonite**: All bentonite will be pure, additive-free bentonite whether it is pellets, chips, or powder.

3.4. Equipment Decontamination

3.4.1. Equipment Decontamination for Monitoring Well Installation

All well materials and drilling equipment which are used to construct a monitoring well or piezometer must be clean and free of any potential contaminants. All well construction materials not certified by LEA personnel as decontaminated when delivered will be decontaminated by steam cleaning before being installed. Drilling equipment must also be decontaminated, prior to beginning work, by steam cleaning. Geoprobe® equipment shall be cleaned using a detergent such as Liquinox®.

All decontamination activities shall be completed at a specially constructed decontamination pad (or a portable decontamination unit). The decontamination pad shall be constructed before any drilling

activity begins. The pad shall be constructed of high-density polyethylene (HDPE) liner material, of sufficient size and strength to allow the drill rig access to the pad, and bermed to contain the generated wastewaters.

3.4.2. Equipment Decontamination for Sampling Equipment and Well Development.

All materials and equipment used to sample soil or which enter a well must be clean and free of any potential contaminants. In general, the choice of decontamination procedures shall be based upon the site-specific contaminants and outlined in the site-specific work plan.

For sites at which the contaminants are unknown, but contamination is suspected, the decontamination procedures outlined below shall be followed.

3.4.2.1. Prior to commencing any field activities, the following solutions (as appropriate for the anticipated contaminants) shall be prepared and placed into 500-ml laboratory squirt bottles: <10% methanol in water; 10% nitric acid in water; 100% n-hexane; distilled, de-ionized water. Other chemicals may be used for decontamination of site-specific contaminants if needed for decontamination of those contaminants.

3.4.2.2. In the field, prepare approximately 2.5 gallons of a solution of Alconox® (or other suitable non-phosphate laboratory grade detergent) in tap water in a 5-gallon bucket.

3.4.2.3. Prepare a piece of 5-mil polyethylene sheeting to underlie the decontamination area. The sheeting shall be of sufficient size to contain any accidental discharge of decontamination solutions. The plastic shall be bermed to contain spills. The decontamination for Geoprobe® equipment shall be performed in buckets or in tubs.

3.4.2.4. The order for decontaminating equipment is as follows:

1) Detergent scrub.
2) De-ionized (DI) water rinse.
3) Hexane rinse (to be used only if separate-phase petroleum product, other than gasoline, is present).
4) DI water rinse.

5) 10% nitric acid rinse (to be used only when metals are suspected as potential contaminants).
6) DI water rinse.
7) Methanol rinse (<10% solution).
8) Air dry.

The order of decontamination may change if different chemicals are used.

3.4.2.5. Disposable materials such as cord shall not be decontaminated and shall be disposed of after use.

3.4.3. At the end of the project day, all spent decontamination fluids and materials, such as the polyethylene sheeting and personal protective equipment, shall be managed and/or disposed of in accordance with all applicable municipal, state, and federal regulations.

## 4. Procedures

### 4.1. Utilities

4.1.1. Notify the appropriate "one call" utility notification service (e.g. Call Before You Dig at 1-800-922-4455, Contractor ID: 10502) at least three working days prior to commencing operations on a site. The locations of all proposed borings must be clearly marked in the field prior to notification. The Project Engineer/Manager **must** call and confirm that each utility has been to the site and has marked their respective lines.

4.1.2. On private sites, consult with the Owner or other person knowledgeable about the site as to the locations of potential private or abandoned utilities and locate these prior to beginning work. Upon the discretion of the Project Engineer/Manager, a pipe locator can also be used to assist in locating utilities.

4.1.3. Note that OSHA may have additional requirements for location of utilities.

4.1.4. All efforts to locate underground utilities (including names of owner or designee and time) should be properly documented in the field logbook prior to onset of the work scheduled.

4.2. OSHA

4.2.1. The Senior LEA representative shall be the Competent Person required by OSHA for all work. However, this does not relieve other LEA representatives from bringing to his or her attention conditions, which may be unsafe or present a hazard to the drilling crew, the general public, or other workers on the site.

4.3. Monitoring Well and Piezometer Installation

The specific monitoring well installation methodologies are dependent upon the specific drilling method used. In general, monitoring wells will be constructed through the inside of the drill stem, once the borehole has been advanced to the desired depth. For Geoprobe® monitoring wells, the wells will be constructed through the inside of stainless steel casing.

4.3.1. Borehole Advancement

If the borehole has been drilled to a depth greater than that at which the well is to be set, the borehole must be backfilled with bentonite pellets, bentonite chips, or a bentonite-cement slurry to a depth of approximately one foot below the intended well depth. Approximately one foot of clean sand must be placed on top of the backfill to return the borehole to the proper depth for the well installation.

For bedrock monitoring wells, the borehole shall be advanced to approximately one foot into competent bedrock and the isolation casing grouted into place. The grout is to be allowed to cure for at least 24 hours before drilling continues. After the grout has cured, the borehole is to be advanced using the appropriate technique (e.g., coring, air rotary, mud rotary) to the desired depth. If the borehole is advanced to a depth greater than that at which the well is to be set, the borehole shall be backfilled as described above.

For Geoprobe® installed wells and piezometers, the steel casing will be drilled to the specified depth of the bottom of the well using the Geoprobe® and in certain cases manually.

4.3.2. Installation of Well Screen and Casing

The appropriate lengths of well screen (with bottom cap, or plug, or well point) and casing must be joined watertight and carefully lowered inside the drill stem to the bottom of the borehole. If centering guides are used, they must be placed at intervals around the well casing, beginning no lower than 5 feet above the top of the screen.

### 4.3.3. Design and Installation of the Filter Pack

After the well screen and casing are installed in the borehole, the filter pack shall be installed. For monitoring wells in unconsolidated materials, the selection of the appropriate filter pack material shall be based upon a grain-size analysis of a sample collected from the intended screen interval. The selection of the appropriate filter pack material shall be based upon the methodologies presented in the "*Handbook of Suggested Practices for the Design and Installation of Groundwater Monitoring Wells*" (EPA, 1989), the "*RCRA Ground Water Monitoring Technical Enforcement Guidance Document*" (EPA, 1986), or any state or local guidance, or regulatory documents which are available. In the absence of grain size analyses, the filter pack material shall be selected based upon an experienced geologist's best judgment as to the appropriate material.

For bedrock monitoring wells, the well screen and filter pack are emplaced primarily to stabilize the borehole and are therefore not sized in the same manner as for a monitoring well in unconsolidated sediments. For typical bedrock monitoring wells, 10-slot well screen is appropriate. The selection of the appropriate filter pack material shall be based upon the slot size selected for the well screen.

A filter pack of clean silica sand will be placed around the well screen. Place the filter pack into the borehole at a uniform rate in a manner that will allow even placement of the sand. The drill stem shall be raised slowly while the sand is being placed to avoid caving of the borehole walls; the drill stem shall never be raised above the top of the filter pack during installation. Using a stainless steel weight on the end of a fiberglass tape, continuously sound the top of the filter pack as it is being installed. The filter pack shall extend from a depth of approximately one foot below the screened interval to a minimum height of one to two feet above the top of the well screen. However, this length may be adjusted if it would create the potential for cross-contamination or in the case of shallow water tables.

A finer-grained sand cap shall be installed for a minimum of one foot above the filter pack. This height may also be adjusted in the case of shallow water tables.

### 4.3.4. Installation of Impermeable Seal

An impermeable seal at least two feet thick must be placed on top of the fine sand cap. The seal may be composed of either bentonite pellets or a bentonite slurry. The pellets must be placed into the borehole in a slow and continuous manner that prevents bridging. This is especially important in deeper monitoring wells where

the pellets may have to be emplaced through a considerable depth of standing water in the borehole.

The bentonite slurry shall be prepared by mixing approximately 15 pounds of bentonite powder with 7 gallons of water for each one cubic foot of slurry needed. The slurry shall be emplaced in the borehole via a tremie pipe. The tremie pipe must be plugged on the bottom and have openings along the sides of the bottom one foot of pipe. This will allow the slurry to be emplaced into the borehole without disturbing the fine sand cap. This procedure is especially important for the relatively deeper wells.

Verify the position of the top of the bentonite seal using a weighted tape measure. If all or a portion of the bentonite seal must be emplaced above the water table, hydrate the bentonite with clean water. Allow 30 minutes after adding the water for the bentonite to hydrate.

The thickness of the bentonite seal may be adjusted for wells completed in aquifers with shallow water tables.

4.3.5. Installation of Grout Backfill

Place an annular seal of cement-bentonite grout above the bentonite seal. Install the cement-bentonite grout continuously from the bottom of the annular space to the ground surface through a tremie pipe. The tremie pipe must be plugged on the bottom and have openings along the sides of the bottom one-foot length of pipe. This will allow the grout to be emplaced into the borehole without disturbing the bentonite seal. Alternatively, a bentonite slurry can be used.

4.3.6. Surface Completion

All monitoring wells will be finished at the surface with a concrete pad (Figure 1). The concrete pad shall typically be two-feet square and at least four inches thick. The concrete shall fill the borehole to a depth below the frost line. The pad shall be constructed in one continuous pour of concrete. Note that some of the cement-bentonite grout used for the annular seal may have to be removed to install the concrete pad. A survey pin may be installed in the concrete pad before it dries, if necessary.

For monitoring wells that will be completed above-grade, a locking steel protective casing shall be installed in the concrete. The protective casing shall extend at least three feet into the ground and two feet above ground. For monitoring wells that will be completed flush, a steel roadbox, suitable for traffic loads, with a gasketed cover and drain shall be installed.

Each well will be properly labeled on the exterior of the locking cap or protective steel casing with a metal stamp indicating the permanent well identifier.

4.3.7. Well Protection Bollards

Guard posts may be installed in high-traffic areas for additional protection. One to four guard posts would be installed around the protective casing, within the edges of the concrete pad. If used, guard posts will consist of concrete-filled steel tubes, at least 3 inches in diameter, painted with multiple coats of epoxy-based paint to prevent rust. The guard posts would extend at least two feet below ground and approximately three feet above ground.

4.3.8. Geoprobe® Prepacked Screen Monitoring Well Installation

The installation of prepacked screen monitoring wells in general follows the following four steps (Figure 2):

4.3.8.1. Anchoring the Well Assembly at Depth

In the first step, an expendable anchor point is driven to the desired depth on the end of a 2.125 outside diameter probe rod string. A prepacked screen assembly is inserted into the inside diameter of the rod string with 5-ft sections of PVC riser. The screens and riser pipe are attached to the anchor point via a snap-lock connector. If the monitoring well is to have a flush-mount finish, it is suggested to prepare a large enough hole to accept a standard well protector before driving the probe rods.

4.3.8.2. Providing a Sand Pack and Grout Barrier

The natural formation will sometimes collapse around the well screens as the probe rod string is withdrawn. This is frequently encountered in sandy formations below the water table. This provides an effective barrier between the screens and grout material used to seal the well annulus. If the formation does not collapse, a sand barrier must be placed from the surface while retracting the well casing. This procedure needs to be followed carefully to prevent the grout from reaching the well screens, potentially giving rise to non-representative samples.

Using a flat tape measure or water level sounder, determine the depth from the top of the PVC riser to the bottom of the annulus between the riser and probe rods. If unstable conditions have resulted in formation collapse (measured depth of 2 to 3 ft), then proceed to 4.3.8.3. if the borehole has not collapsed, then retract the casing to 1 ft above the screen while adding

sand. Take measurements with a weighted tape. Continue until 2 ft of sandpack have been established above the well screen.

4.3.8.3. Installing a Bentonite Seal above the Screen

Proceed as in section 4.3.4. above. Bring the bentonite seal to within 2 ft from ground surface to allow well completion

4.3.8.4. Installing Well Protection.

Proceed as in Section 4.3.6. above.

## 5. Well Development

Monitoring well development may be accomplished by surging and bailing (or pumping), or over pumping. Other methods, such as air jetting, backwashing, or air-lift pumping, shall be avoided because these methods introduce fluids into the formation and may have unexpected influences on groundwater quality, if only for a short period of time.

Immediately upon opening the well, the air in the wellhead will be sampled for VOCs using a portable VOC analyzer, such as a Photovac MicroTIP®. The well cap shall be opened slightly and the sampling port of the VOC analyzer shall be inserted into the well. The maximum reading shall be recorded on the appropriate field paperwork. The instrument shall be zeroed with ambient air prior to the measurement, and the initial and final readings shall be recorded for each well.

Measures shall be taken during well sampling to prevent surface soils from coming in contact with the purging equipment and lines. Typically, a polyethylene sheet is placed on the ground providing adequate coverage for the equipment being used.

In addition, the procedures described in LEA SOP ID 10004 in the sections for Field Analysis, Well Evacuation, and Sample Withdrawal shall be followed.

### 5.1. Surging and Bailing

In surging and bailing, a well is developed by alternately surging a short section of the screen with a tight-fitting surge block. Begin by lowering the surge block to the top of the screened interval and swab the well with a pumping action with a typical stroke of 2 to 3 feet. (Begin surging at the top of the well intake to avoid having loosened material from "sand-locking" the surge block.) Do not surge the well too violently to avoid damaging the well screen or the filter pack. Remove the surge block at regular intervals and bail (or pump) the fine material from the well. Proceed with surging throughout the length of the well screen, being careful

to avoid hitting the bottom of the well. Check the quality of the bailed water at regular intervals, as described in Section 5.3.

In cases where a considerable volume of sediment may initially be drawn into the well, begin surging the well gently in the casing above the well screen. Proceed with surging and bailing to the bottom of the screened interval.

5.2. Overpumping

In overpumping, a well is developed by operating a pump in the well at a capacity which greatly exceeds the formation's ability to supply water. The flow velocity into the well during overpumping usually greatly exceeds the flow velocity induced during normal sampling. This increased velocity causes movement of particles from the formation into the well.

Begin developing the well by installing a suitable pump at the bottom of the well. Alternatively, a surface-mounted pump with a suction hose may be used if the drawdown inside the well will not exceed the pump's available lift. The discharge from the pump shall be directed to approved containers. The pump (or intake hose) must be equipped with a backflow-prevention valve to prevent introducing aerated water into the aquifer.

Start the pump and discharge water at the highest practical rate. If the well runs dry, stop the pump and allow the well to recharge. Check the quality of the discharged water at regular intervals as described in Section 4.3.

5.3. Completing Well Development

During bailing or pumping, measure and record water quality parameters to gauge the degree and effectiveness of development. Typically, pH, temperature, specific conductivity, and turbidity shall be checked at periodic intervals (but at least every three well-volumes) until the purge water begins to appear clear. Then measurements shall be made after each well volume until the parameters stabilize. The water quality parameters may be considered stable when:

- pH, temperature, and specific conductivity of consecutive measurements have relative percent differences (RPD), as defined below, of less than 10%; and,
- The turbidity is 5 NTU or less (applicable only in aquifers with low percentages of fines. This may not be achievable in all situations, but the turbidity shall be less than 50 NTU and shall stabilize with an RPD of less than 10%).

However, in no case shall the development stop before the above criteria are met, and:

- At least 3 well volumes have been removed; or,
- The well has been surged and pumped for at least 30 minutes.

The RPD between two measurements (e.g., M1 and M2) is calculated as follows:

$$RPD = \frac{|M1 - M2|}{(M1 + M2)/2} \times 100\%$$

All well development equipment and supplies shall be thoroughly decontaminated prior to and between each monitoring well. Place all development water into properly labeled, suitable containers; leave all filled containers in an appropriate location.

## 6. Documentation

### 6.1. Well Development

Well development activities will be documented on the appropriate field forms, and specifically on the "Field Data Record Groundwater" and "Well Development Report" forms. Information provided on those forms includes: purge method, amount of water per well volume, instrument readings after purging of each well volume.

### 6.2. Monitoring Well Completion Log Forms

During the installation of a monitoring well, complete records must be kept of quantities and types of all well construction materials used.

A complete geologic log shall be kept during advancement of the borehole for the well. The procedures for completing geologic logs are presented in *Standard Operating Procedure for Geologic Logging of Unconsolidated Sedimentary Materials* (SOP ID 10015). However, the additional information pertinent to monitoring well installations shall be recorded on a separate form. A monitoring well completion form is provided in Attachment 1. In addition typical wellhead details – one for flush-mount well completions and one for above-grade completions - are provided as Figure 1. Whenever a monitoring well is installed, record all appropriate information concerning the quantity of materials used, the

type and manufacturer of the materials, the mixtures of grouts or slurries, and any pertinent notes regarding the installation of each well.

After the project is completed, submit a copy of the attached Geologic Soil Boring/Well Completion Log Request Form along with copies of all Monitoring Well Completion forms for final typing and entry into the LEA database. The request form provides information on the types of final logs to be produced, the scale at which to plot the final forms, and notes common to all reports.

## 7. Quality Assurance/Quality Control

Quality assurance/quality control (QA/QC) procedures will be followed in compliance with the site-specific work plan.

## 8. References

8.1. EPA, *RCRA Groundwater Monitoring Technical Enforcement Guidance Document*, OSWER 9950.1, September 1986.

8.2 EPA, *Handbook of Suggested Practices for the Design and Installation of Groundwater Monitoring Wells*, EPA/600/4-89/034, 1989.

8.3 Geoprobe, *Geoprobe® 0.5-in x 1.4 in OD and 0.75 in x 1.4 in OD Prepacked Screen Monitoring Wells, Standard Operating Procedure*, Technical Bulletin No. 962000, September 1996, revised; June 2002.

END OF DOCUMENT

# ATTACHMENT 1

## Monitoring Well Completion Report and Well Development Forms

# WELL COMPLETION REPORT

**Project:**
**LEA Comm. No.**
**Client**
**Location** _____

**Start Date** | **End Date**

**Well ID**

**Drilling Contractor** _____
**Drilling Method** _____
**Sampling Method** _____
**Groundwater Observation**
**Depth** _____ **at** _____ **Hours**

**Logged by**
**Drilling Foreman** _____
**Drill Rig** _____
**GPS Latitude** _____
**GPS Longitude** _____

Protector
- Material _____
- Diameter _____
- Length _____ Ground
- Stickup _____
- Key # _____
- Cover Type _____

Top Seal
- Top _____
- Bottom _____
- Material _____

Backfill
- Top _____
- Bottom _____
- Material _____

Secondary Sand
- Top _____
- Bottom _____
- Size _____

*Filter Pack*
- Top _____
- Bottom _____
- Material _____

Reported depth to bottom of boring _____

Comments

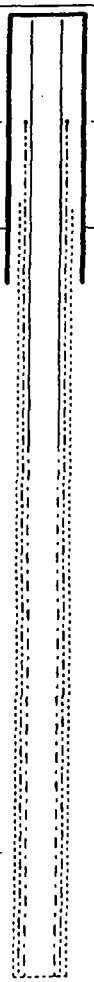

Concrete Diameter _____
Concrete Thickness _____

Reference
- Stickup _____
- Description _____

Casing
- Diameter _____
- Material _____
- Length _____
- Stickup _____

Seal
- Top _____
- Bottom _____
- Material _____

Screen
- Top _____
- Bottom _____
- Material _____
- *Diameter* _____
- Length _____
- Slot Size _____

Miscellaneous Materials (Quantity Used/Item)
- Cement _____
- Bentonite Chips _____
- Bentonite Pellets _____
- Bentonite Powder _____
- Grout Weight _____
- Filter Pack Sand _____
- Capping Sand _____
- Well Point _____
- Well Plug _____

***Signature*** _____

Loureiro Engineering Associates, Inc.

Loureiro Engineering Associates, Inc.

# FIELD SAMPLING RECORD
# WELL DEVELOPMENT

**LEA Comm. No.**
Project
Location
Client

Page ____ of ____
Date ___/___/____
Time ___:___

Monitoring Well Number _____ Sample Number(s) _____ _____

**Initial Field Data and Measurements**

Depth of Well _____ Reference Used _____
Depth to Water _____ PID/FID Reading _____
*Height of Column* _____ Interface Yes / No If yes, Depth _____ Lighter / Heavier

Well Casing Diameter _____ Material _____
Protector Road Box / Stickup
Ground to Reference _____
Comments _____

| General Condition | OK | Bad |
|---|---|---|
| Casing Secure | | |
| Collar Intact | | |
| Cover Locked | | |
| Other (describe) | | |

**Development Information**

Purge Volume Factors
*0.5" - 0.01*
*1" - 0.041*
*1.5" - 0.091*
*2" - 0.16*
*4" - 0.65*
*6" - 1.5*

Initial Sample Observations
- Clear ☐
- Colored ☐
- Cloudy ☐
- Turbid ☐
- Odor ☐
- Sheen ☐

| Volumes \ Parameter | Gallons | Temp (C) | pH (SU) | Spec.Con. | Turbidity | Other |
|---|---|---|---|---|---|---|
| Initial | | | | | | |
| | | | | | | |
| | | | | | | |
| | | | | | | |
| | | | | | | |
| | | | | | | |
| | | | | | | |
| | | | | | | |
| | | | | | | |
| | | | | | | |
| | | | | | | |
| | | | | | | |
| | | | | | | |
| | | | | | | |
| | | | | | | |

Developement Method Peristaltic Pump / Bailer / Inertial Pump / Other _____

Field Decontamination? Yes / No If Yes, with what? _____
Waste Container ID _____

**Additional Comments**

Field Personnel _____ _____ *Signature*

# FIGURES

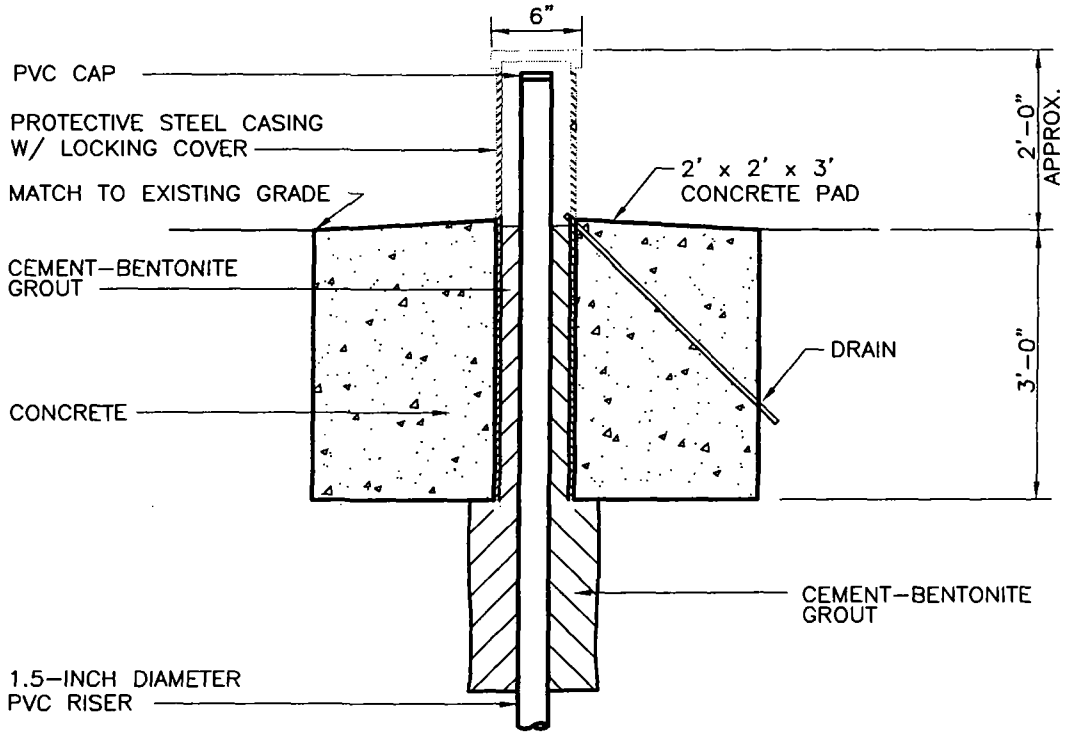


**ABOVE GRADE WELLHEAD**
**CONSTRUCTION DETAIL – NOT TO SCALE**

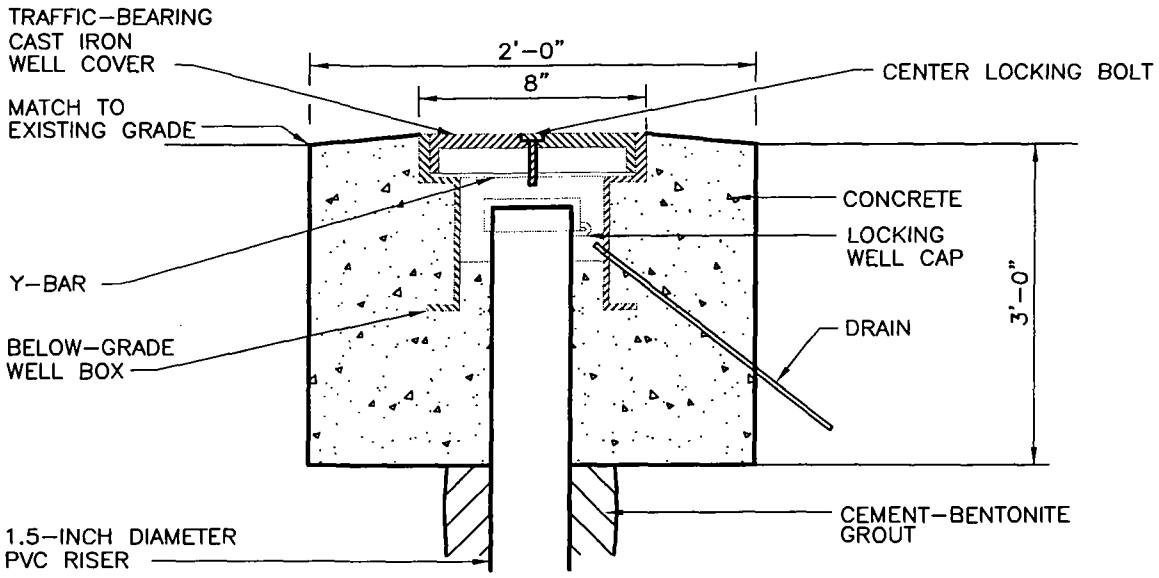


**FLUSH TO GRADE WELLHEAD**
**CONSTRUCTION DETAIL – NOT TO SCALE**

REFERENCES:

EPA, "RCRA GROUNDWATER MONITORING TECHNICAL ENFORCEMENT GUIDANCE DOCUMENT", OSWER 9950.1, SEPTEMBER 1986.

EPA, "HANDBOOK OF SUGGESTED PRACTICES FOR THE DESIGN AND INSTALLATION OF GROUNDWATER MONITORING WELLS", EPA/600/4-89/034, 1989.

LEA SOP for Installing & Developing Monitoring Wells & Piezometers

**TYPICAL WELLHEAD DETAILS**
**Modified March 2008**

| Comm.No. | |
|---|---|
| 100 | **FIGURE 1** |

G:\AUTOCAD\PROJECTS\000010D\SOPS\WELLHEAD DETAILS.DWG Tab:REV MAR 2008 Saved: 3/5/2008 2:01 PM Plotted: 3/5/2008 2:23 PM

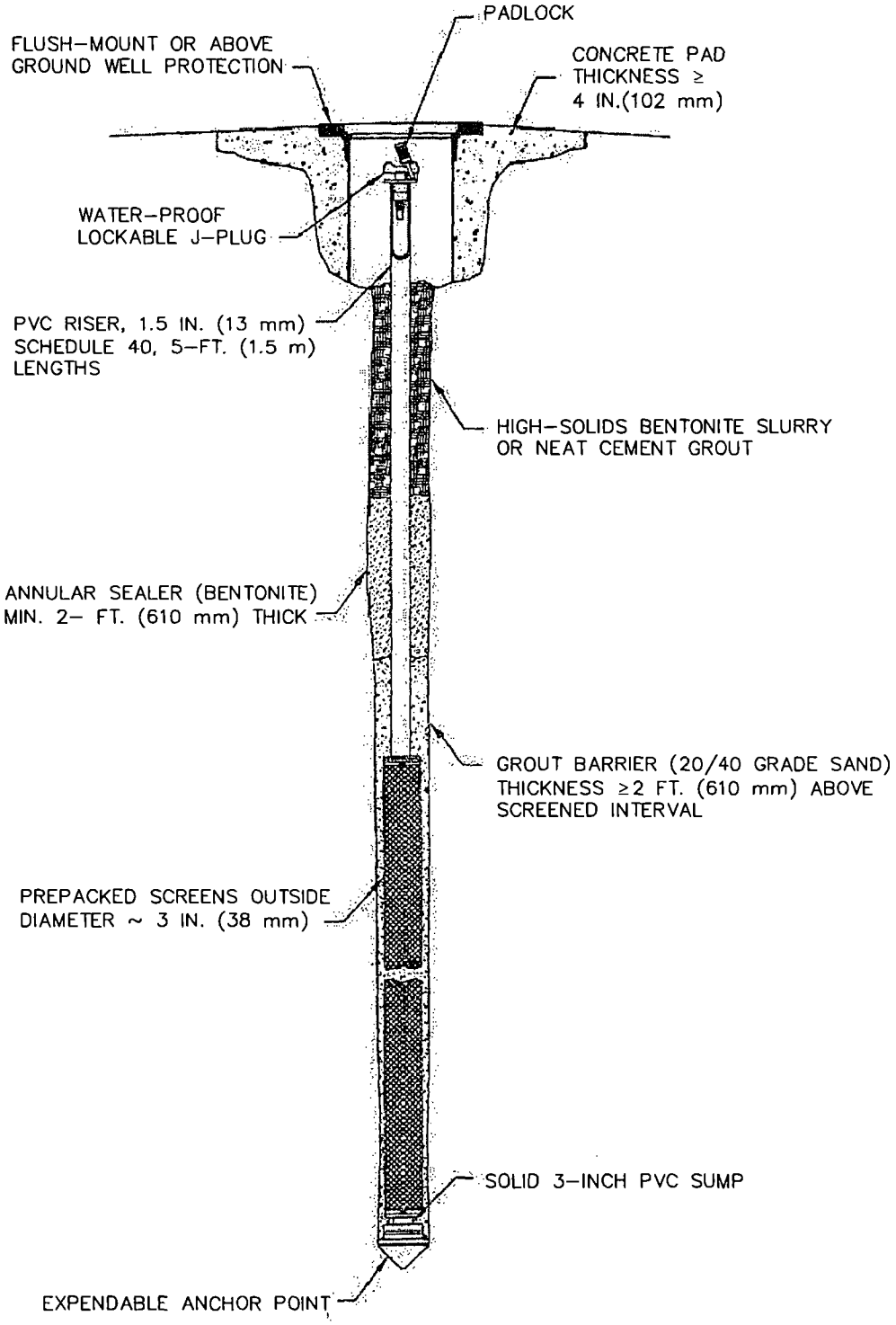


ADAPTED FROM "GEOPROBE ® SYSTEMS - THE COMPLETE PROBING SYSTEM", TECHNICAL BULLITEN 99250, AUG. 1999, REVISED DEC. 2002.

LEA SOP for Installing & Developing Monitoring Wells & Piezometers

**COMPLETED PRE-PACKED SCREEN WELL**

**Modified March 2008**

| Comm.No. | |
|---|---|
| 100 | **FIGURE 2** |

G:\AUTOCAD\PROJECTS\0000100\SOPS\PREPACK-SCREEN-WELL.DWG Tab: REV MARCH 2008 Saved: 3/5/2008 2:16 PM Plotted: 3/5/2008 2:20 PM

**Loureiro Engineering Associates, Inc.**
**Standard Operating Procedure**
**for**
**Processing Performance Evaluation Samples**

**SOP ID: 10030**
**Date Initiated: 04/01/98**
**Revision No. 002: 05/02/05**

**Approved By:** ***/s/ Christina M. Clemmey*** ***05/02/05***
**Christina M. Clemmey** **Date**
**Analytical and Validation Services Manager**

***/s/ Nick D. Skoularikis*** ***05/02/05***
**Nick D. Skoularikis** **Date**
**Director of Quality**

## REVISION RECORD

| Rev # | Date | Additions/Deletions/Modifications |
|---|---|---|
| Initial Issue | 04/01/98 | |
| 001 | 08/31/01 | Revisions throughout. Updated to reflect new SOP format. |
| 002 | 05/02/05 | Changed SOP title from "Ordering" to "Processing". |

# Loureiro Engineering Associates, Inc.
# Standard Operating Procedure
# for
# Processing Performance Evaluation Samples

## 1. Purpose and Scope

This document discusses procedures for obtaining and submitting performance evaluation (PE) samples to analytical laboratories that are used by Loureiro Engineering Associates, Inc. (LEA). The procedures outlined in this document are wholly for the purpose of establishing systematic procedures for obtaining, storing, handling, and submitting PE samples. This SOP is intended to serve as a reference for any LEA employee submitting PE samples to an analytical laboratory. Quality assurance/quality control (QA/QC) procedures have also been incorporated into this SOP.

The decision whether to use PE samples is project-specific, dictated by data quality objectives and agency requirements. Not all projects require the use of PE samples.

## 2. Definitions

2.1. PE samples: A sample that mimics actual samples in all possible aspects, except that its composition is known to the auditor and unknown to the analyst. (It is, however, recommended to use aqueous PE samples in cases where a soil matrix is being tested). PE samples are provided to test whether a measurement system can produce analytical results within specified performance goals.

2.2. Blind Sample: A sample submitted to the laboratory for analysis with a composition and identity known to the submitter but unknown to the analyst. A blind sample number should be used. No other designation on the sample label or chain-of-custody should exist that could be used by the laboratory to identify the sample as an evaluation sample. Blind samples are used to test the laboratory's proficiency in the execution of the measurement process. Samples may be either single blind (the analyst knows that the sample is a PE sample but does not know what analytes and at what concentrations it contains) or double-blind (the analyst does not know that the sample is a PE sample).

## 3. Equipment

- Laboratory glassware, identical to the ones provided by the laboratory.
- Cooler with identifiable cooler ID.
- Chain-of-custody.
- Thermometer.

## 4. Procedure

4.1. Define Evaluation Requirements

4.1.1. Define sampling objectives with Project Manager. Coordinate the receipt of PE samples with actual environmental media sampling. In most instances PE samples will be submitted concurrently with environmental media samples. In other cases the PE samples may be forwarded to selected laboratories individually in order to assess laboratory performance.

4.1.2. PE sample selection should be based on the objectives of the sampling requirements. Typically, PE samples are being submitted for the entire suite of analytes. It is recommended, however, to use separate sample numbers for the semivolatile organic compounds (SVOCs) and polychlorinated biphenyls (PCBs) to prevent a mix up by the laboratory.

4.2. Contact Accredited Laboratory (PE Vendor)

4.2.1. Place order for PE Samples selected with qualifying certified laboratory several days in advance. In most cases the vendor selected will be Environmental Resource Associates (ERA) of Arvada, CO.

4.2.2. Fax a copy of a purchase order, and an explanatory cover letter to the PE sample vendor. The cover letter should detail when the bottles will be sent to the PE vendor and when we expect to receive the PE samples in return. Examples of these documents are included in Attachment 1.

4.2.3. A list of recommended unknown constituents has been prepared to facilitate the selection of the PE parameters. The selection options are presented in the "Lab Performance Sample Matrix" which is also attached. The date that PE samples will arrive at LEA should be correlated with any sampling activities that are to be conducted.

4.2.4. Arrangements should be made so that the PE samples are received in our office at the same day as the day that the field activities are conducted. The laboratory should be notified that analyses should be performed on a tighter holding time. This is important since the PE samples are being prepared a day earlier and their holding time expiration is one day ahead of the field samples. It is also recommended to request that PE samples be prepared and shipped the same day.

4.2.5. Avoid requesting receipt of samples on Monday, as this will shorten the VOC holding time by 3 days.

4.3. Order Sample Jars from Analytical Laboratory to be Evaluated

4.3.1. Place a bottle order with the analytical laboratory, requesting the appropriate bottles for the environmental analyses selected, based on the environmental media and the intended analytes of the sampling program that is to be undertaken.

4.3.2. Process paperwork request with LEA Data Management for applicable field paperwork and sample labels for field sampling activities, or just for PE samples (if no concurrent sampling is to be conducted).

4.4. Sending Sample Jars to PE Vendor

4.4.1. Once the empty bottles are received from the analytical laboratory select the appropriate glassware for the PE sample constituents.

4.4.2. Pack empty bottles in bubble wrap, including a trip blank and a temperature blank. The trip blank and the temperature blank are of paramount concern if you are also sending sample jars for volatile organic compound (VOC) analysis (e.g. 40 ml VOA vials) to the PE manufacturer. Refer to SOP ID 10005, *Quality Assurance/Quality Control Measures for Field Activities*.

4.4.3. Fill out a chain of custody for the bottles you are sending to the PE vendor. Send the original chain of custody with the cooler and keep a copy of the chain of custody for your records.

4.5. Receiving PE Samples from the PE Vendor

4.5.1. Upon receipt of the cooler check custody seals.

4.5.2. If a VOC certified standard is included in the PE standards that are being checked in, the first thing that needs to be done when the cooler is received is to measure and record the temperature of the temperature blank included in the cooler. Record the temperature in the form provided by the vendor and sign the form. This needs to be done as soon as the cooler is received. As applicable, return the cooler to the PE sample vendor.

4.5.2.1. If the temperature blank exceeds 6°C, contact the project manager and the Analytical Laboratory and Data Validation Manager. The PE sample may not be valid particularly if a VOC performance sample is included. If this is the case contact the PE sample vendor to request a replacement. To prevent this from happening to the extent possible, the cooler should be opened and the temperature should be recorded as soon as possible after receipt by LEA.

4.5.3. Place the certified samples in a sample holding refrigerator. This refrigerator must have a set temperature of 4°C. Ensure that any VOC certified sample is accompanied by the original trip blank that was sent to the PE manufacturer.

4.5.4. Fill out the receiving chain of custody to the sample holding refrigerator, making sure to maintain a copy of the chain of custody with the samples while they are waiting to be shipped.

4.5.5. Do **not** remove the sample labels/tags yet that are attached by the PE manufacturer. These tags are the only indication of what constituents have been spiked into the bottles. This is particularly critical for SVOCs and PCBs since the bottles are generally identical and unpreserved.

4.6. Shipping PE Samples to the Analytical Laboratory

4.6.1. Remove the PE samples from the sample refrigerator with any accompanying QA/QC samples (trip blank), release the samples from the accompanying chain of custody, and file this paperwork appropriately.

4.6.2. If a PE sample is going to be submitted to the analytical laboratory with other collected environmental samples then be sure to add the PE sample to the original *Field Sampling Record*. When a PE sample is being added to an original *Field Sampling Record* make sure to include the appropriate class identifier. A water performance evaluation

sample (PEW) and a soil performance evaluation sample (PES) are the two classes identifiable in the LEA Database.

4.6.3. The procedure described in this section should be witnessed by two employees, who will each cosign the PE sample preparation form. Label the glassware including any accompanying QA/QC samples appropriately, with dedicated LEA sample labels in cases where the glassware being used is indistinguishable (similar container, same preservative). Only remove the PE manufacturer's labels after the LEA sample labels are affixed and checked. Dedicated means that all of the sample jars, for both soil and water, should have separate sample numbers for each type of analysis. This is particularly important for the SVOC and PCB analyses to ensure that there will be no sample selection errors by the analytical laboratory. (Note that water PCB samples are usually collected in the same jars as SVOC samples. Also, all soil samples are usually collected in similar jars.)

4.6.4. Write the LEA sample number on the vendor label and then remove the tag. Tape all original vendor tags onto the "Field Sampling Record – Performance Sample" to be filed in the project notebook. This will serve as a cross-reference for LEA sample number, constituent(s) and vendor lot number for future reference. A copy of the form is provided in Attachment 2.

4.6.5. Carefully transcribe the LEA sample number from the label that has been affixed to the jar onto the field paperwork as each vendor label is removed. Write the constituent (i.e. VOCs, SVOCs, etc) next to the sample number on the field paperwork. Also write the vendor's name and PE lot number on the field paperwork.

4.6.6. Include the PE samples on the chain of custody paperwork. This chain-of-custody form is different than the one used to ship and receive the glassware from the PE sample vendor.

4.6.7. Have another LEA employee check the cooler chain of custody for accuracy and have that person initial the chain of custody.

4.6.8. File copies of all applicable field sampling paperwork including the page with the original vendors tags taped to it.

4.7. Result Interpretation

4.7.1. Once the data reported by the laboratory are entered into the project-specific database it should be verified for accuracy against the hard

copies. Similarly, once the vendor-specified acceptance limits and "true" values are entered in the database they should be verified against the hard copies for accuracy.

4.7.2. Upon receipt of the results submit the "FAIL" or "FALSE NEGATIVE/POSITIVE" information to the analytical laboratory so they can check for possible errors and report any corrective actions taken. Please note that in some instances, the client may limit the amount of information reported to the laboratory to only the "FAIL" and FALSE NEGATIVE/POSITIVE" designation. The information reported back to the laboratory is project specific.

## 5. References

5.1. EPA, January 2000, *Guidance on Technical Audits and Related Assessments for Environmental Data Operations*, EPA QA/G-7, Final (EPA/600/R-99/080).

END OF DOCUMENT

# ATTACHMENT 1

## PE Sample Ordering Information

| SOIL - BLIND PERFORMANCE SAMPLES | | | | | |
|---|---|---|---|---|---|
| | VOCs | SVOCs | METALs | TPH | PCBs |
| LOT # | 1 | 2 | 3 | 4 | 5 |
| A | Stock Lot - 1 of 11 available | Stock Lot - 1 avail = 4/year | Stock Lot - 1 of 2 available | Stock Lot - 1 of 3 available | Stock Lot - 1260 Low 1 avail = 4/year |
| B | Stock Lot - 2 of 11 available | Stock Lot - 1 avail = 4/year | Stock Lot - 2 of 2 available | Stock Lot - 2 of 3 available | Stock Lot - 1254 Low 1 of 3 available |
| C | Stock Lot - 3 of 11 available | Stock Lot - 1 avail = 4/year | Stock Lot - 1 of 2 available | Stock Lot - 3 of 3 available | Stock Lot - 1248 Low 1 of 2 available |
| D | Stock Lot - 4 of 11 available | Stock Lot - 1 avail = 4/year | Stock Lot - 2 of 2 available | Stock Lot - 2 of 3 available | Stock Lot - 1254 Low 2 of 3 available |
| PRICE | $295 each | $261 each | $215 each | $107 each | $215 each |

| WATER - DOUBLE BLIND SAMPLES | | | | | |
|---|---|---|---|---|---|
| | VOCs | SVOCs | METALs | TPH | PCBs |
| LOT # | 1 | 2 | 3 | 4 | 5 |
| A | TCE = 25 ug/l | Bis (2) = 50 ug/l | Cr = 0.4 mg/l | 1 mg/l | 1260 = 1.4 ug/l |
| | PCE = 50 ug/l | NAP = 75 ug/l | Zn = 0.5 mg/l | | |
| | VC = 80 ug/l | PYR = 125 ug/l | | | |
| | | | | | |
| B | TCA = 25 ug/l | BAP = 10 ug/l | As = 0.2 mg/l | 0.7 mg/l | 1248 = 0.8 ug/l |
| | PCE = 100 ug/l | BBF = 10 ug/l | Pb = 0.5 mg/l | | |
| | MC = 25 ug/l | PHN = 5 ug/l | | | |
| | | | | | |
| C | BZ= 5 ug/l | ANTH = 150 ug/l | Cd = 0.1 mg/l | 2 mg/l | 1260 = 1 ug/l |
| | EBZ = 75 ug/l | Bis (2) = 100 ug/l | Hg = 0.01 mg/l | | |
| | TL = 100 ug/l | DBP = 5 ug/l | | | |
| | | | | | |
| D | MC= 50 ug/l | FA = 35 ug/l | Ba= 1 mg/l | 5 mg/l | 1254 = 0.7 ug/l |
| | ACT = 125 ug/l | FLE = 50 ug/l | Ni = 0.20 mg/l | | |
| | PCE = 25 ug/l | BA = 5 ug/l | | | |
| | | | | | |
| PRICE | $216-B,C,D ($266-A) | $216 each | $155 each | $115 each | $126 each |

**LIST OF ABBREVIATIONS:**

TCE = Trichloroethylene
PCE = Tetrachloroethylene
VC = Vinyl chloride
TCA = 1,1,1-Trichloroethane
MC = Methylene chloride
BZ = Benzene
EBZ = Ethylbenzene

TL = Toluene
ACT = Acetone
Bis (2) = Bis(2-ethylhexyl) phthalate
NAP = Napthalene
PYR = Pyrene
BAP = Benzo[a]pyrene
BBF = Benzo[b]fluoranthene

PHN = Phenanthrene
ANTH = Anthracene
DBP = Di-n-butyl phthalate
FA = Fluoranthene
FLE = Fluorene
BA = Benzo[a]anthracene

# FACSIMILE TRANSMITTAL SHEET

Loureiro Engineering Associates, Inc.

| | | | |
|---|---|---|---|
| TO: | **Dale Shallenberger** | FAX NUMBER: | **303-421-0159**<br>**303.421.3062 (lab)** |
| COMPANY: | **ERA** | DATE: | **12/04/2001** |
| FROM: | **Nick Skoularikis** | NO. OF PAGES (including cover): | **3** |
| RE: | **PE sample preparation** | LEA REFERENCE NUMBER: | |

☐ URGENT ☐ FOR REVIEW ☐ FOR YOUR USE ☐ PLEASE COMMENT ☐ PLEASE REPLY

NOTES/COMMENTS:

Dale

I am shipping the cooler with the glassware today. Please call tomorrow if there are any questions.
I am attaching the PO # 6312 and the solution types to be used.
**Please reference the PO# in the invoice. Also add the Commission Number: 68VD134.001**
Please use Lots A and B.
The lab needs the following jars per sample:

- 3 VOA vials
- Two 1-Liter for TPH
- Two 1-Liter for SVOCs
- Two 1-Liter for PCBs
- One 1-Liter for Cyanide
- Two for metals (one for filtered and one unfiltered)

Please ship overnight on Monday 8/6/01 and on Tuesday 8/7/01 (one each) for receipt the following day.

Thanks
Nick

100 NORTHWEST DRIVE PLAINVILLE, CT 06062 860-747-6181 FAX 860-747-8822

Loureiro Engineering Associates, Inc.

# PURCHASE ORDER

| | |
|---|---|
| Loureiro Engineering Associates, Inc.<br>100 Northwest Drive<br>Plainville, CT 06062<br>Phone: (860) 747-6181 Fax: (860) 747-8822 | **Purchase Order Number: 6312** |

| | |
|---|---|
| **Date: 12/04/01** | **Ordered By: Nick Skoularikis** |
| | **Approved By: Nick Skoularikis** |

| | |
|---|---|
| **Commission Number 68VD135** | **Task Number 001** |

| | |
|---|---|
| | LEA, Plainville CT, Nick Skoularikis |
| Company<br>**Env Resource Associates** | Company Attention<br>Loureiro Engineering Assoc., Inc. |
| Street Address/P.O. Box<br>5540 Marshall street | Street Address/P.O. Box<br>100 Northwest Drive |
| City/State/Zip Code<br>Arvada, CO 80002 | City/State/Zip Code<br>Plainville, CT 06062 |
| Phone 800.446.8736 Fax | Phone 860/ 747-6181 Fax 860/747-8822 |
| | Shipping/Delivery Instructions:<br>Overnight , |

| CODE | QTY | PART NO. | DESCRIPTION | PRICE (EA) | AMOUNT |
|---|---|---|---|---|---|
| | 2 | Lots B,C | VOCs, aqueous PE sample | 232 | 464 |
| | 2 | Lots A, B | SVOCs, aqueous PE sample | 232 | 464 |
| | 2 | Lots A, B | Metals aqueous PE sample | 170 | 340 |
| | 2 | Lots A, B | TPH aqueous PE sample | 125 | 230 |
| | 2 | Lots A, B | PCBs aqueous PE sample | 126 | 252 |
| | 2 | Lots A,B | CN aqueous PE sample | 89 | 178 |
| | | | | | |
| | | | Plus shipping charges (FedEx Overnight) | | |
| | | | | | |
| | | | | | |
| | | | | | |
| | | | | | |
| | | | | SUBTOTAL | 1928 |
| | | | | FREIGHT | |
| | | | | TAX RATE | 6.000% |
| | | | | TAX | |
| | | | | TOTAL DUE | |

U:\ndskoularikis\WORD\PO5 ERA.DOC

# ATTACHMENT 2

## Field Sampling Record
## Performance Sample

Loureiro Engineering Associates, Inc.

# FIELD SAMPLING RECORD
## PERFORMANCE SAMPLE

| | | |
|---|---|---|
| **LEA Comm. No.** | **67PV102.001** | Page _____ of _____ |
| Project | | Date ___/___/____ |
| Location | Plainville Landfill, Plainville, CT | |
| Client | Town of Plainville | |

LEA Sample ID _____

LEA Sample ID _____

LEA Sample ID _____

LEA Sample ID _____

LEA Sample ID _____

LEA Sample ID _____

| | | | |
|---|---|---|---|
| Field Personnel | _____ | _____ | ***Signature*** |
| | _____ | _____ | _____ |

**Loureiro Engineering Associates, Inc.**
**Standard Operating Procedure**
**for**
**Documentation and Integrity**
**of**
**Field Sampling Activities**

**SOP ID: 10038**
**Date Initiated: 04/30/99**
**Revision No. 002: 08/09/02**

**Approved By: /s/ David C. Brisson 08/09/02**
**David C. Brisson Date**
**Project Geologist**

**/s/ Nick Skoularikis 08/09/02**
**Nick D. Skoularikis Date**
**Directory of Quality**

## REVISION RECORD

| Rev # | Date | Additions/Deletions/Modifications |
|---|---|---|
| Initial Issue | 4/30/99 | |
| 001 | 12/31/01 | Formatting and minor revisions throughout |
| 002 | 08/09/02 | Added requirement for briefing or written work instructions prior to sampling; Added section on field equipment request and vehicle request; Added section on chain-of-custody form; Added section on cooler integrity and shipment. |

# Loureiro Engineering Associates, Inc.
# Standard Operating Procedure
# for
# Documentation
# of
# Field Sampling Activities

## 1. Purpose and Scope

1.1. This document describes procedures to be followed for proper documentation of all activities associated with sampling of environmental media, including tool and instrument preparation, field measurements and sampling, quality assurance/quality control (QA/QC) sample preparation, and chain-of-custody protocols. The use of specific documentation procedures depends on the goals of a particular project and should be dictated by the project-specific work plan. This Standard Operating Procedure (SOP) is to be used in conjunction with other Loureiro Engineering Associates, Inc. (LEA) SOPs and guidance for the performance of the associated field sampling activities. This guidance can be provided verbally through a briefing prior to the field activities or through a document such as written work instructions or a project-specific work plan.

## 2. Definitions

None

## 3. Equipment

None

## 4. Procedure

4.1. General

4.1.1. Field procedures for which documentation covered under this SOP is required include sampling of soil, groundwater, air, surface water, and sediment, and any other media from which samples are collected, as well as associated activities.

Documentation to be provided will include:

- Summary of daily field activities.
- Sample descriptions.
- Equipment used.
- Analyses required.
- Instrument calibration.
- Waste disposal.

4.1.2. All relevant information shall be included on the appropriate field report forms. However, the chain-of-custody record will include only that information necessary for proper sample identification and analysis.

4.2. Paperwork Preparation and Completion

4.2.1. Obtaining field paperwork

4.2.1.1. Prior to the initial start up of field activities, the Project Manager, or a designee, shall submit the proper site information to the Database Manager. This information shall include: project name, client name, commission and task number, site name, site location, directions to site, personnel requirements, type of activities planned for the site, approximate duration of field activities, sample information, and the project start date.

4.2.1.2. Once the correct information is entered into the database, paperwork may be obtained directly by the field personnel through the database or by requesting preparation of the paperwork from the database manager. This task should be completed 24 to 48 hours prior to the initiation of field activities.

4.2.2. Field Equipment and Vehicle Request

4.2.2.1. A field equipment request form should be prepared and submitted to the field services manager. The field services manager will in turn ensure that all equipment are available and in proper condition for the specific project. A field vehicle should also be requested. The vehicle will be assigned to the field team based on availability.

4.2.3. Field Activities Documentation

4.2.3.1. The purpose of field paperwork is to adequately document all field activities. It is important to document field conditions that may have an impact on the field activities, such as weather conditions, physical constraints, nearby construction or dewatering activities (to the extent known).

4.2.3.2. All field paperwork must be filled out accurately and be completed in the field before the end of the workday. The only exception is the preparation of performance evaluation (PE) samples, which should be completed in the office after the PE samples have been properly labeled (LEA SOP 10030). Information on equipment and expendable item usage shall be completed during the day, but checked for omissions at the end of the day.

4.2.3.3. At the conclusion of each sampling day, the field personnel shall conduct a quality control review before leaving the field, using the Quality Assurance Checklist section of the Daily Field Report.

4.2.4. Chain-of-Custody Form

4.2.4.1. Although the chain-of-custody forms vary between laboratories and the analyses requested vary on a project-specific basis, the following information should be provided on the chain-of-custody forms:

- Specify the LEA seven-digit sample number, date and time of collection, sample matrix, the type of analyses requested, and the preservatives used. For aqueous samples, the information provided should clearly indicate which preservative is used for which analyses. The analytical method requested should be specified.

- The cooler containing the samples should be labeled with the appropriate identification information. If the sample cooler does not already have an ID assign and attach a new preprinted seven-digit LEA sample label to the cooler.

- Specify whether an electronic disk deliverable (EDD) or data validation package is required.

- Specify the purchase order number, or for United Technologies Corporation (UTC) projects specify the United Analytical Request Procedure (UARP) number.

- Use the suffix "uf" after the seven-digit LEA sample number to denote unfiltered metal samples, as applicable.

4.2.5. Cooler Integrity and Shipment

4.2.5.1. An iced cooler should be available with laboratory-supplied glassware and preservatives. The cooler should contain ice prior to and during sample collection.

4.2.5.2. A cooler containing samples should never be left unattended during the sampling day. If the field personnel need to leave the site at any time, they can lock the cooler in the trailer, staging area, or field vehicle. A temporary chain-of custody seal shall be used at that time to ensure the integrity of the samples.

4.2.5.3. For projects where an offsite laboratory is being used, the office should be contacted to arrange for cooler shipment. In such cases, the laboratory will provide preprinted air bills for shipment through their preferred carrier or will arrange for direct pickup from the office or from the site.

4.2.5.4. When the sampling is completed and the cooler is being prepared for shipment, fresh ice should be placed in the cooler along with a temperature blank. It is important that the cooler has been assigned a cooler ID so that the laboratory can associate the temperature measured with a specific cooler.

4.2.5.5. The sample jars should be placed in a plastic bag to avoid direct contact with the water, which may cause the labels to peel off.

4.2.5.6. A signed custody seal should be used when sealing the cooler. The date and time should also be recorded on the seal.

4.2.6. Post Field Activities

4.2.6.1. Ensure that the paperwork is complete and that the pages are numbered sequentially.

4.2.6.2. Verify that all waste container information has been recorded.

4.2.6.3. Appropriate entries should be made for all visitors to the site related to the field activities performed.

4.2.6.4. Document on the field forms, whether any photos of the site were taken.

4.2.6.5. Upon completion of the daily field activities and after review of the completed paperwork, a copy of the field paperwork shall be submitted to the database manager. The originals shall be retained for filing in the project notebook.

4.2.6.6. All required information from the field is entered into the database by the database manager or a designee. A data review checklist is printed out upon completion. Included with the data review checklist may be a comment sheet indicating inconsistencies in the data entered that were readily apparent based on electronic comparison of the data or noted by personnel entering the data.

4.3. Data Verification

4.3.1. The data review checklist and the comment sheet shall be obtained from the database manager by the project manager or a designee for review. The data review checklist shall be maintained in the project notebook under the QA/QC section and will be periodically reviewed by the Director of Quality.

4.3.2. Once the project manager or designee completes the review process, any mistakes shall be brought to the attention of the database manager in a timely manner, generally in less than two business days from the day on which the database manager prepared the review sheets.

4.3.3. After the corrected information has been entered into the database, a revised data review checklist (and any necessary additional comment sheets) will be provided to the project manager or designee.

4.3.4. The above process will be repeated as necessary until it has been determined that the information that has been entered into the database is accurate and complete.

## 5. References

None

END OF DOCUMENT

**Loureiro Engineering Associates, Inc.**
**Standard Operating Procedure**
**for**
**Low Flow (Low Stress)**
**Liquid Sample Collection and Field Analysis**

**SOP ID: 10039**
**Date Initiated: 06/11/01**
**Revision No. 003: 04/01/05**

**Approved By:** *<u>/s/ David C. Brisson</u>* *<u>04/01/05</u>*
**David C. Brisson** **Date**
**Project Geologist**

*<u>/s/ Gail Batchelder</u>* *<u>04/01/05</u>*
**Gail L. Batchelder** **Date**
**Technical Director, Hydrogeology**

*<u>/s/ Nick D. Skoularikis</u>* *<u>04/01/05</u>*
**Nick D. Skoularikis** **Date**
**Director of Quality**

## REVISION RECORD

| Rev # | Date | Additions/Deletions/Modifications |
|---|---|---|
| Initial Issue | 06/11/01 | |
| 001 | 04/01/02 | Updated to reflect new SOP format. |
| 002 | 12/02/02 | Updated to reflect stabilization procedures. |
| 003 | 04/01/05 | Incorporated modified low-flow sampling procedure to include the use of a peristaltic pump. |

**Loureiro Engineering Associates, Inc.**
**Standard Operating Procedure**
**For**
**Low Flow (Low Stress)**
**Liquid Sample Collection and Field Analysis**

## 1. Purpose and Scope

This standard operating procedure (SOP) describes the procedures to be followed for measurement of static water level elevations, detection of immiscible layers, well evacuation, sample withdrawal, and field analyses utilizing low flow sampling techniques.

## 2. Definitions

2.1. Immiscible layers: The term is used to denote free-phase liquids that may be present in the aquifer as a result of a release. These liquids may have a density lighter than water (light non-aqueous phase liquids (LNAPL) or floaters) or heavier than water (dense non-aqueous phase liquids (DNAPL) or sinkers).

## 3. Equipment

3.1. Equipment required for the collection and field analysis of liquid samples shall include:

- Water-level indicator (accurate to 0.01 foot).
- Distilled water.
- Hand towels.
- Portable volatile organic compound (VOC) analyzer (Photovac MicroTIP®, Foxboro OVA® or equivalent).
- Interface probe/clear view bailer (to check for light non-aqueous phase liquids only).
- Flow-through cell capable of monitoring pH, temperature, specific-conductance, oxidation reduction potential (Eh), dissolved oxygen (DO), and turbidity.
- Polyethylene plastic sheeting.

- Adjustable rate submersible pump (preferred), adjustable rate centrifugal pump, bladder pump (constructed of stainless steel or Teflon®), or adjustable rate peristaltic pump
- Appropriate tubing for the pump used, for instance polyethylene tubing (1/4 to 3/8 inch outer diameter (O.D.)) for the peristaltic pump
- Clean disposable gloves.
- Alconox®, or other non-phosphate laboratory grade detergent.
- Three 5-gallon buckets.
- Decontamination brushes.
- Distilled, de-ionized (DI) water.
- Decontamination fluids (less than 10 percent methanol in water, 100 percent n-hexane, and 10 percent nitric acid).

## 4. Procedure

### 4.1. Health & Safety Requirements

All health and safety requirements described in the site specific Health & Safety Plan and/or Job Hazard analysis shall be observed

### 4.2. Equipment Decontamination

All materials and equipment that enter a well must be clean and free of any potential contaminants. Do not use any contaminated equipment or materials which are not designed to be used for groundwater monitoring, even if this means that the sampling will not be performed as planned.

In general, the choice of decontamination procedures should be based upon knowledge of the site-specific contaminants and outlined in the site-specific work plan.

For sites at which the contaminants are unknown, but contamination is suspected, the decontamination procedures outlined below should be followed.

4.2.1. Prior to commencing any field activities, the following solutions (as appropriate for the appropriate contaminants) should be prepared and placed into 500-ml laboratory squirt bottles: less than 10 percent

methanol in water; 10 percent nitric acid in water; 100 percent n-hexane; distilled, de-ionized water.

4.2.2. In the field, prepare approximately 2.5 gallons of a solution of Alconox® (or other suitable non-phosphate laboratory grade detergent) in tap water in a 5-gallon bucket.

4.2.3. Prepare a piece of 5-mil polyethylene sheeting to underlie the decontamination area. The sheeting should be of sufficient size to contain any accidental discharge of decontamination solutions. The plastic should be bermed to contain spills.

4.2.4. The order for decontaminating equipment is as follows:

1) Detergent scrub.
2) DI water rinse.
3) Hexane rinse (to be used only if separate-phase petroleum product, other than gasoline, is present).
4) DI water rinse.
5) 10 percent nitric acid rinse (to be used only when metals are suspected as potential contaminants).
6) DI water rinse.
7) Methanol rinse (less than 10 percent solution).
8) Air dry.

4.2.5. Materials such as the bailer cord should not be decontaminated and should just be disposed of after each test. Note: Bailers should be used **only** to check for LNAPL before sample collection using low-flow/low stress procedures. A bailer may be used to check for DNAPL only **after** all sample collection equipment has been removed from the well.

4.2.6. Wrap each piece of decontaminated equipment in aluminum foil, as appropriate, to maintain cleanliness.

4.2.7. At the end of the project day, dispose of all spent decontamination fluids and materials such as the polyethylene sheeting and personal protective equipment in accordance with all applicable municipal, state, and federal regulations.

4.3. Sample Collection

4.3.1. Immediately upon opening the well, the air in the well head will be sampled for VOCs using a portable VOC analyzer, such as a Photovac

MicroTIP® or equivalent. The instrument shall be zeroed with ambient air prior to the measurement, and the highest reading observed shall be recorded for each well. Measurements should be taken until stabilization of the readings has occurred.

4.4. Detection of Immiscible Layers

4.4.1. Should evidence warrant, a sampling event shall include provisions for the detection of immiscible phases prior to well evacuation or sample collection. LNAPLs are relatively insoluble liquid organic compounds with densities less than that of water (1 g/ml), while DNAPLs are organic compounds with densities greater than that of water. Lighter and/or denser immiscible phases may be encountered in a groundwater monitoring well.

4.4.2. An interface probe will be used to determine the existence of any immiscible layers, light or dense. Alternatively, a clear fluorocarbon resin or PVC bailer may be used to determine the existence of the phases or oil sheen in the well when no accurate determination of the immiscible layer thickness is required. As noted above, efforts to detect LNAPL only can be performed prior to sample collection. Efforts to detect DNAPL can be performed only AFTER sample collection has occurred.

4.4.3. Should elevations of the immiscible layers be required, levels of the fluids shall be measured to an accuracy of 0.01 feet using an electronic interface probe capable of detecting the interfaces between air, product, and water. The interface levels shall be recorded in the field form. Adjustments of the observed head to the theoretical hydraulic head shall be calculated based on the density conversion factor associated with the particular non-aqueous phase liquid.

4.4.4. If LNAPL is detected in a well, collection of a groundwater sample from that well is not recommended unless otherwise specified in the site-specific work plan or work instruction. However, if a groundwater sample must be collected from that well, low-flow sampling is the recommended technique, although care must be taken to minimize mobilization of the LNAPL into the zone from which the sample will be collected.

4.5. Measurement of Static Water Level

4.5.1. The static water elevations in each well shall be measured prior to each sampling event. This is performed initially to characterize the site, and in subsequent sampling rounds to determine whether horizontal or vertical flow gradients have changed. A change in hydrologic conditions may necessitate modification of the groundwater monitoring program.

4.5.2. Remove the protective cover and locking cap from the well.

4.5.3. Each well shall have a surveyed reference point located at the top of the well casing with the locking cap removed. The reference point shall be easily recognizable, since the personnel conducting the sampling may differ from one sampling event to the next.

4.5.4. The following parameters shall be measured with an accuracy of 0.01 ft:

- Depth to standing water.
- Depth to bottom of well.

4.5.5. A water-level indicator with a fiberglass tape will be used for measurement. As a result of possible pressure differences between the well atmosphere and the ambient atmosphere, the water level will be allowed fifteen minutes to equilibrate upon removal of the well cap. If excess pressure is encountered the water level will be allowed greater than fifteen minutes to equilibrate upon removal of the well cap. The results shall be recorded on the appropriate field form(s).

4.5.6. Total depth measurements will be compared to original depths to determine the degree of siltation that may have occurred. This information shall be noted on the field forms. Should significant siltation occur in any well, the well shall be redeveloped by an approved method.

4.5.7. The portion of the tape immersed in the well shall be decontaminated during retrieval using a distilled water rinse followed by drying with a clean wipe, prior to use in another well. This decontamination procedure shall be amended, as needed, to accommodate the specific type of contamination anticipated.

4.5.8. The static water level should be monitored and recorded throughout the purging and sampling of each well.

4.6. Field Analysis

4.6.1. Parameters that are physically or chemically unstable shall be tested utilizing a flow-through cell.. Such parameters as pH, temperature, specific conductance, DO, Eh, and turbidity will be measured in the field at the temperature of the well sample.

4.6.2. Parameters such as pH, temperature, specific conductance, DO, and Eh shall be measured using a flow-through-cell (YSI model 6820 or equivalent). The meter shall be calibrated prior to use and at the end of the day using supplied solutions in accordance with the instructions provided by the manufacturer. Calibration information will be recorded in the field before and after each calibration.

4.5.3 Turbidity can be measured with a separate turbidimeter, although some flow-through cells include a turbidimeter. It is useful to have a separate turbidimeter on hand to check the validity of the turbidity values obtained using the flow-through cell if there is difficulty reaching low turbidity values or if the turbidity readings recorded do not seem to be consistent with visual observation of the water samples. All samples, including turbidity samples and samples to be submitted for analysis, must be collected before the groundwater passes through the flow-through cell to prevent cross-contamination by potentially stagnant fluid within the flow-through cell. This can be accomplished by using a bypass assembly or disconnecting the tubing from the flow-cell inlet prior to sampling.

4.7. Well Evacuation

4.7.1. Calculate standing water in the well based on the following schedule and record on the appropriate field form:

| Well Diameter (inches) | Conversion Factor (gal/feet) |
|---|---|
| 2 | 0.163 |
| 4 | 0.654 |
| 6 | 1.47 |

4.7.2. Generally, a submersible, air-lift, bladder, or peristaltic pump equipped with appropriate tubing of inert materials (such as polyethylene), shall be used to evacuate the monitoring wells.

4.7.3. A new piece of polyethylene plastic shall be placed on the ground adjacent to the well. Sampling and purging equipment such as the pump, tubing, containers, etc., shall be placed on the polyethylene sheet, never on the ground.

4.7.4. The pumps and tubing shall be prepared for insertion into the well while wearing disposable gloves. Make sure that any tubing or pump apparatus is of sufficient length to reach the appropriate depth for pumping.

4.7.5. Lower the pump and/or tubing gently into the water column to the midpoint of the saturated portion of the screened interval, unless otherwise specified. A site-specific sampling plan should specify the sampling depth, or provide specific criteria for the selection of intake depth for each well. If possible keep the pump intake two feet above the bottom of the well. Start the pump at the lowest speed setting and slowly increase the speed until discharge occurs. The initial pumping rate shall be approximately 0.1 liters per minute, however, the pumping rate shall not exceed 0.25 liters per minute. Measure the water level to ensure that drawdown in excess of 0.3 feet does not occur in the well. Adjust the pumping rate as necessary until little or no drawdown occurs. If the drawdown exceeds 0.3 feet, reduce pumping rate if possible. If drawdown still does not stabilize at a depth above the pump intake, shut the pump down and allow the well to recharge. It should be noted that stable drawdowns of 0.3 feet are desirable but not mandatory. Stabilization of the drawdown to a depth greater than 0.3 feet is acceptable as long as the depth at which stabilization occurs is above the pump intake. However, it is important that the stabilization depth is clearly recorded and maintained.

4.7.6. Monitor and record the water level and pumping rate at a minimum of every five minutes during purging. Calculate the volume of the discharge tubing, bladder pump (if used), and the flow-through cell. Monitor and record indicator field parameters (turbidity, pH, Eh, DO, temperature and specific conductance) in the well from the first water extracted during the purging process and at least every five minutes thereafter. Stabilization is considered to be achieved when three consecutive readings are within the following limits and no increasing or decreasing trend in the data can be observed:

- Turbidity (10% for values less than 5 and greater than 1 NTU). It should be noted that achievements of turbidity levels less than 5 NTUs are not mandatory but efforts should be made to collect a groundwater samples with the lowest turbidity achievable.
- DO (10%, measured as milligrams per liter).
- Specific Conductance and Temperature (3%).
- pH (+/- 0.1 unit).
- ORP/Eh (+/- 10 millivolts).

4.7.7. If after 2.5 hours of purging or the purging of three well volumes, (whichever comes first) the field parameters have not stabilized, purging may be discontinued to allow sample collection. Similarly, if it is not possible to obtain stabilization as described above as a result of slow recovery of the well, the well shall be evacuated and allowed to recover, at which point the samples should be collected immediately. The appropriate sampling forms shall include a notation that sample collection occurred without stabilization. Samples obtained from slow-yielding wells shall be collected as soon as a sufficient volume is available for a sample for each parameter.

4.7.8. Do **not** re-use purging equipment. Pumps shall be decontaminated between monitoring wells, in accordance with procedures noted in Section 4.1.

4.7.9. Record sampler's name, sampling time, volume of water purged, parameters measured, weather conditions, sample number, analyses required and all other pertinent information in the field notebook and/or appropriate field forms, and complete the chain of custody form.

4.7.10. Any water purged from the monitoring wells shall be stored in appropriate containers until the laboratory analyses are available. Then it should be disposed of in accordance with all applicable local, state and federal requirements.

4.7.11. Storage shall be in containers approved for storage of hazardous materials, and in an appropriate designated location at the facility.

4.8. Sample Withdrawal

4.8.1. In order to ensure that the groundwater sample is representative of the formation, it is important to minimize physical alteration (i.e. agitation during purging and/or sample collection) or chemical contamination of the sample during the withdrawal process.

4.8.2. Use an appropriate pump to purge each well; the same pump used for purging shall be used for sample withdrawal.

4.8.3. The samples shall be collected at a location before entering the flow-through cell. To minimize the effects of water column agitation on sample quality, samples shall be collected from the pump tubing in the following order into pre-labeled sample containers:

- VOCs.
- Total petroleum hydrocarbons.
- Extractable organics (semivolatiles).
- PCBs.
- Metals.
- Phenols.
- Cyanide.
- Chloride and sulfate.
- Nitrate and ammonia.
- Turbidity.
- Radionuclides.
- Purgeable organic carbon (POCs).
- Purgeable organic halogens (POX).
- Total organic halogens (TOX).
- Total organic carbon (TOC).

4.8.4. Samples shall be obtained from the monitoring wells as soon as possible after purging. This may require waiting an extended period for low-yielding wells.

4.8.5. Samples collected for VOC analysis shall be free of any air bubbles and inverted upon filling. Bacterial samples shall be collected using dedicated gloves; taking care not to allow anything to touch the inside of the sampling container.

4.8.6. Samples collected for metals analysis, which are to be filtered in the field, shall be passed through an appropriately sized filter prior to placement in the sample bottle. Pre-rinse the filter with approximately 25 to 50 milliliters of groundwater prior to collecting the filtered metals sample. Filter sizes will generally be either 0.45 microns for dissolved metals and 10 microns for metals that could be present as colloids or adsorbed onto colloids that could be mobile in the aquifer. The appropriate filter size for the individual project must be provided in site-specific work instructions.

4.9. "What If" Scenarios

4.9.1. Certain field conditions may be encountered that influence the choice of equipment to be used or altogether limit the feasibility of low-flow sampling techniques. The following is a brief description of select scenarios to provide field personnel with a guideline if similar circumstances are encountered

4.9.2. Turbidity

4.9.2.1. If turbidity measurements do not stabilize as described above after 2.5 hours of purging or the evacuation of three well volumes, whichever comes first, sample collection can be initiated. Record observations of the color, clarity, and other observable characteristics of the groundwater (such as the presence or absence of particles) in the field paperwork

4.9.2.2. If samples are being collected for analysis for total (unfiltered) metals and the turbidity has not stabilized below 10 NTU, a sample for additional analysis for metals should also be collected after being filtered in the field through an in-line 10-micron filter, if specified in the work instructions.

4.9.3. Peristaltic Pump

4.9.3.1. Difficulty may be encountered while advancing the flexible polyethylene peristaltic pump tubing to the desired depth within a deep well or older well. Excessive friction may result from the tubing contacting the sidewall of the well casing or accumulations of material on the well casing (i.e. mineral and bacterial deposits). In these scenarios, the tubing may coil within the well during advancement and prevent the desired depth from being attained. Efforts to weight the tubing should be attempted before using alternate pumping techniques.

4.9.3.2. If such well conditions are expected, a bladder pump or similarly submersible pump should be used instead of a peristaltic pump. A bladder pump provides sufficient mass on the tubing to allow for advancement in deep or older wells.

4.9.3.3. A peristaltic pump cannot be used to sample wells in which the depth to water is greater than approximately 25 feet.

4.9.4. Sampling Depth

4.9.4.1. If conditions exist that prevent the appropriate pump or tubing from being advanced to the midpoint of the saturated portion of the screened interval, low-flow sampling techniques shall not be used. Instead, sampling shall be conducted using conventional purging and sampling techniques, as described in LEA SOP 10004 entitled *Liquid Sample Collection and Field Analysis*. Justification for not using low-flow sampling techniques must be provided in the field paperwork.

4.10. Field Documentation

4.10.1. Field documentation shall include at a minimum: a chain-of-custody form, Field Data Record Groundwater Form, Sample Collection Form, Daily Field Report. Sample labels and sample seals shall be used for proper sample identification.

4.10.1.1. The labels shall be sufficiently durable to withstand immersion for 48 hours without detaching and to withstand normal handling. The information provided shall be legible at all times.

4.10.1.2. The following information shall be provided on the sample label using an indelible pen:

- Sample identification number.
- Date and time of collection.
- Place of collection.
- Parameter(s) requested (if space permits).

4.10.1.3. Appropriate field forms will be used to log all pertinent information with an indelible pen. The following information shall be provided:

- Project and site identification.
- LEA commission number.
- Identification of well.
- Static water level measurement technique.
- Presence of immiscible layers and detection method.
- Time well purged.
- Collection method for immiscible layers and sample identification numbers.
- Well evacuation procedure/equipment.
- Sample withdrawal procedure/equipment.
- Date and time of collection.
- Types of sample containers used and sample identification numbers.
- Preservative(s) used.
- Parameters requested for analysis.
- Field analysis method(s).
- Whether or not field filtration was performed and the filter size, if appropriate.
- Field observations on day of sampling event.
- Record of site activities.
- Field personnel.

- Climatic conditions, including air temperature.
- Status of total production.
- Record of non-productive time.

4.10.1.4. The Field Sampling Record shall include at a minimum the following information:

- Identification of well.
- Date and time of collection.
- Name of collector.
- Sample number.

4.10.1.5. The chain-of-custody record shall include the following information:

- Company's name and location.
- Date and time of collection.
- Sample number.
- Container type, number, size.
- Preservative used.
- Signature of collector.
- Signatures of persons involved in the chain of possession.
- Analyses to be performed.
- Type and number of samples.

4.10.1.6. The Field Data Record Groundwater Form shall be updated during the sampling of each well and include the following information:

- Identification of well.
- Well depth, diameter, depth to water.
- Static water level depth and measurement technique.
- Purge volume and pumping rate.
- Time well is purged.

- Measurements of initial field parameters and all subsequent readings.
- Any specific circumstances, as described above, such as field filtering, lack of stabilization of parameters, water characteristics, etc.
- LEA commission number.
- Date.

4.10.1.7. The Daily Field Record shall include the following information:

- Client's name, location, LEA commission number, date.
- Instrument make, model, and type.
- Calibration readings.
- Calibration/filtration lot numbers.
- Field personnel and signature.

4.10.1.8. The Daily Field Record shall assure the completeness of the sampling round and include the following information:

- Reviewer's name, date, and LEA commission number.
- Review of all necessary site activities and field forms.
- Statement of corrective actions for deficiencies.

## 5. References

5.1. United States Environmental Protection Agency (EPA), Region I. *Low Stress (Low Flow) Purging and Sampling Procedure for the Collection of Groundwater Samples from Monitoring Wells,* July 30, 1996, Revision 2.

5.2. EPA. *Groundwater Sampling Guidelines for Superfund and RCRA Project Managers – Groundwater Forum Issue Paper,* Office of Solid Waste and Emergency Response, (EPA 542-S-02-001), May 2002.

5.3. Robert W. Puls and Michael Barcelona, EPA. *Low-Flow (Minimal Drawdown) Ground-Water Sampling Procedures,* in Groundwater Issue, (EPA/540/S-95/504), April 1996.

5.4. Connecticut Department of Environmental Protection, Bureau of Water Management, Permitting Enforcement and Remediation Division. *Site Characterization Guidance Document,* Draft, June 12, 2000.

END OF DOCUMENT

# APPENDIX C

## TestAmerica-West Sacramento SOPs and Method 8290A Summary

# METHOD SUMMARY & DATA QUALITY OBJECTIVES

## TestAmerica West Sacramento
## SW8290: Polychlorinated Dibenzodioxins (PCDDs) and Polychlorinated Dibenzofurans (PCDFs) by High Resolution Gas Chromatography / High Resolution Mass Spectrometry (HRGC/HRMS)

This method provides instrument and extraction procedures for the detection and quantitation of PCDDs (tetra through octa-chlorinated homologues) and PCDFs (tetra through octa-chlorinated homologues) in a variety of sample matrices in part-per-trillion (ppt) to part-per-quadrillion (ppq) concentrations.

Method SW8290 is used to detect dioxins and furans in variety of matrices and uses additional quality controls to allow more sophisticated determinations of detection limits and target analyte concentrations than other routine GC and GC/MS methods.

Method SW8290 requires that isotopically labeled analogs of target analytes be spiked into each sample before extraction, and uses nine $^{13}C$ labeled analogs, one furan and one dioxin at each chlorination level. 13C-OCDF is not used as an internal standard due to its potential interference with OCDD and 13C-1,2,3,7,8,9-HxCDD is used as a recovery standard. By adding a known amount of labeled compounds to every sample prior to extraction, correction for recovery of the target analytes can be made because the target analytes and their labeled analog exhibit similar effects upon extraction, cleanup, concentration, and gas chromatography. Target analytes are quantitated relative to the labeled analog and therefore their calculated concentration compensates for extraction and cleanup efficiencies.

A batch specific LCS (Laboratory Control Sample) is not required by Method 8290, however, TestAmerica West Sacramento still analyzes an LCS at a frequency of 1 per batch of 20 samples as an ongoing system and standard check. The target analyte concentrations for the LCS are given in Table 2. Sample matrix spikes and/or spike duplicates are performed only at client request. The spike concentrations are nominal values based on a full volume sample preparation (1000 mls for liquids and 10 grams for solids). If less than a full volume of sample is prepared due to sample matrix, sample availability, or method requirements, the spike amount will remain constant and therefore the spike concentrations will vary. See Table 2 through Table 4 for specific QC control and corrective action measures.

Detection Limits and Reporting Limits:

TestAmerica West Sacramento's Method SW8290 provides customizable options to report detection limits and/or reporting limits.

- Reporting Limit (RL) - When target analytes meet method identification criteria and are free of interferences, they are reported down to the lowest calibration standard concentration (see reporting limits in Table 1). Data can be reported to the RL without the use of qualification if required.
- Estimated Detection Limit (EDL) - For each analyte not detected, an EDL can be reported. The sample specific EDL is an estimate of the concentration of a given analyte that would have to be present to produce a signal with a peak height of at least 2.5 times the background signal level. The estimate is specific to a particular analysis of the sample and will be affected by sample size, dilution, etc. Because of the toxicological significance of dioxins, the EDL value can be reported for non-detected chemicals rather than reporting the reporting limit (RL). Any analyte with a peak greater than 2.5 times the noise and meets all qualitative requirements but less than the RL would be reported with a "J" flag.
- Method Detection Limit (MDL) – Qualitatively confirmed analytes are reported as "estimated" down to the statistically derived MDL to denote the less certain quantitation and the value is qualified with a "J" flag. Any peak with a calculated concentration below the MDL is reported as "not detected" with no further qualification.

Second column confirmation will be performed only for 2,3,7,8-TCDF positives as per the convention selected..

Toxicity Equivalence Factors (TEFs)

As per client request, the 2,3,7,8-TCDD toxicity equivalence can be calculated in accordance with the procedures given in one of three different formats:

- TEF values cited in the U.S. Environmental Protection Agency, (1989) "Interim procedures for estimating risks associated with exposures to mixtures of chlorinated dibenzo-p-dioxins and –dibenzofurans (CDDs and CDFs) and 1989 update. U.S. Environmental Protection Agency, Risk Assessment forum, Washington DC; (EPA 625/3-89/016)."
- "WHO TEFs for human risk assessment based on the conclusions of the World Health Organization meeting in Stockholm, Sweden, 15-18, June 1997 (Van den Berg et aL, 1998)."
- "WHO TEFs for human risk assessment based on the conclusions of the World Health Organization meeting in Geneva, Switzerland, June 2005."

TEFs are assigned to each 2,3,7,8-substituted PCDDs/PCDFs in order to relate their toxicity to that of 2,3,7,8-TCDD. See Table 6 for the factors used to calculate TEFs. Note that EDL and detection limit values are not normally included in the TEQ adjusted concentration.

Uniform Federal Policy for Quality Assurance Project Plan (UFP-QAPP) Worksheets

UFP – QAPP Worksheets for Method 8290 pre-filled in with laboratory specific information are available upon request. Available tables include:

- Table 12 – Measurement Performance Criteria Table (Field QC and Laboratory QC Samples).
- Table 15 – Reference Limits and Evaluation Table
- Table 19 – Analytical SOP Requirements Table
- Table 23 – Analytical SOP References Table
- Table 24 – Analytical Instrument Calibration Table
- Table 25 – Analytical Instrument and Equipment Maintenance, Testing, and Inspection Table
- Table 28 – Laboratory QC Samples Table
- Table 30 – Analytical Services Table

All tables are available in Microsoft Excel format for easy import into your proposal. Please ask your Project Manager for details.

# TABLE 1 REPORTING LIMITS (RLs)
## Based on Lower Calibration Limits
## Method 8290 – TestAmerica

Lower detection limits are achievable using the estimated detection limit option.

| Analyte | Water[1] (pg/L) RL | Soil/Sediment/Tissue[2] (pg/g) RL | Waste[3] (pg/g) RL |
|---|---|---|---|
| Dioxins | | | |
| 2,3,7,8-TCDD | 10 | 1.0 | 100 |
| 1,2,3,7,8-PeCDD | 50 | 5.0 | 500 |
| 1,2,3,4,7,8-HxCDD | 50 | 5.0 | 500 |
| 1,2,3,6,7,8-HxCDD | 50 | 5.0 | 500 |
| 1,2,3,7,8,9-HxCDD | 50 | 5.0 | 500 |
| 1,2,3,4,6,7,8-HpCDD | 50 | 5.0 | 500 |
| OCDD | 100 | 10 | 1000 |
| Furans | | | |
| 2,3,7,8-TCDF | 10 | 1.0 | 100 |
| 1,2,3,7,8-PeCDF | 50 | 5.0 | 500 |
| 2,3,4,7,8-PeCDF | 50 | 5.0 | 500 |
| 1,2,3,4,7,8-HxCDF | 50 | 5.0 | 500 |
| 1,2,3,6,7,8-HxCDF | 50 | 5.0 | 500 |
| 1,2,3,7,8,9-HxCDF | 50 | 5.0 | 500 |
| 2,3,4,6,7,8-HxCDF | 50 | 5.0 | 500 |
| 1,2,3,4,6,7,8-HpCDF | 50 | 5.0 | 500 |
| 1,2,3,4,7,8,9-HpCDF | 50 | 5.0 | 500 |
| OCDF | 100 | 10 | 1000 |

Note: "Totals" values are available upon client request.

[1] Based upon a 1.0 liter sample aliquot. Sensitivity of the method depends on the level of interferences rather than instrumental limitations.

[2] Based upon a 10.0 gram sample aliquot. Maximum RL for samples "as received". Correction for moisture content may raise reporting limits above these levels.

[3] Based upon a 0.1 gram sample aliquot. Maximum RL for samples "as received". Correction for moisture content may raise reporting limits above these levels. Typical waste samples may have higher reporting limits and may require additional cleanup techniques.

# TABLE 2 CONTROL LIMITS FOR LABORATORY CONTROL SAMPLES (LCS), MATRIX SPIKES and MATRIX SPIKE DUPLICATES
## Method 8290 – TestAmerica

| Target Compound | LCS/MS/MSD Control Limits (Soil/Sediment) | | | | LCS/MS/MSD Control Limits (Water) | | | |
|---|---|---|---|---|---|---|---|---|
| | AMT (pg/g) | Lower Control Limit | Upper Control Limit | RPD | AMT (pg/L) | Lower Control Limit | Upper Control Limit | RPD |
| Dioxins | | | | | | | | |
| 2,3,7,8-TCDD | 20 | 77 | 133 | 20 | 200 | 71 | 128 | 20 |
| 1,2,3,7,8-PeCDD | 100 | 74 | 145 | 20 | 1000 | 74 | 139 | 20 |
| 1,2,3,4,7,8-HxCDD | 100 | 68 | 146 | 20 | 1000 | 65 | 144 | 20 |
| 1,2,3,6,7,8-HxCDD | 100 | 79 | 141 | 20 | 1000 | 73 | 142 | 20 |
| 1,2,3,7,8,9-HxCDD | 100 | 68 | 139 | 20 | 1000 | 60 | 147 | 20 |
| 1,2,3,4,6,7,8-HpCDD | 100 | 74 | 147 | 20 | 1000 | 79 | 137 | 20 |
| OCDD | 200 | 75 | 153 | 20 | 2000 | 71 | 147 | 20 |
| Furans | | | | | | | | |
| 2,3,7,8-TCDF | 20 | 80 | 146 | 20 | 200 | 75 | 142 | 20 |
| 1,2,3,7,8-PeCDF | 100 | 84 | 143 | 20 | 1000 | 80 | 140 | 20 |
| 2,3,4,7,8-PeCDF | 100 | 76 | 157 | 20 | 1000 | 71 | 144 | 20 |
| 1,2,3,4,7,8-HxCDF | 100 | 78 | 141 | 20 | 1000 | 64 | 149 | 20 |
| 1,2,3,6,7,8-HxCDF | 100 | 78 | 144 | 20 | 1000 | 56 | 161 | 20 |
| 2,3,4,6,7,8-HxCDF | 100 | 73 | 157 | 20 | 1000 | 60 | 169 | 20 |
| 1,2,3,7,8,9-HxCDF | 100 | 70 | 144 | 20 | 1000 | 53 | 163 | 20 |
| 1,2,3,4,6,7,8-HpCDF | 100 | 79 | 143 | 20 | 1000 | 78 | 141 | 20 |
| 1,2,3,4,7,8,9-HpCDF | 100 | 79 | 150 | 20 | 1000 | 80 | 146 | 20 |
| OCDF | 200 | 70 | 158 | 20 | 2000 | 76 | 147 | 20 |

Note:
Native compound limits are TestAmerica West Sacramento historical limits and are subject to change.
RPD limits are currently set to the method default of 20%.
Tissue and waste control limits are available upon request.

# TABLE 3 CONTROL LIMITS FOR INTERNAL STANDARDS
## Method 8290 – TestAmerica

| Internal Standard Compound | Internal Standards Control Limits (Soil/Sediment) | | | Internal Standards Control Limits (Water) | | |
|---|---|---|---|---|---|---|
| | AMT (pg/g) | Lower Control Limit | Upper Control Limit | AMT (pg/L) | Lower Control Limit | Upper Control Limit |
| Dioxins | | | | | | |
| 13C-2,3,7,8-TCDD | 200 | 40 | 135 | 2000 | 40 | 135 |
| 13C-1,2,3,7,8-PeCDD | 200 | 40 | 135 | 2000 | 40 | 135 |
| 13C-1,2,3,6,7,8-HxCDD | 200 | 40 | 135 | 2000 | 40 | 135 |
| 13C-1,2,3,4,6,7,8-HpCDD | 200 | 40 | 135 | 2000 | 40 | 135 |
| 13C-OCDD | 400 | 40 | 135 | 4000 | 40 | 135 |
| Furans | | | | | | |
| 13C-2,3,7,8-TCDF | 200 | 40 | 135 | 2000 | 40 | 135 |
| 13C-1,2,3,7,8-PeCDF | 200 | 40 | 135 | 2000 | 40 | 135 |
| 13C-1,2,3,4,7,8-HxCDF | 200 | 40 | 135 | 2000 | 40 | 135 |
| 13C-1,2,3,4,6,7,8-HpCDF | 200 | 40 | 135 | 2000 | 40 | 135 |

Note:
Method default control limits. Signal-to-noise is also evaluated for data acceptability. These labeled analytes are spiked into all samples. Tissue and waste control limits are available upon request.

## TABLE 4 SUMMARY OF CALIBRATION PROCEDURES
## Method 8290 – TestAmerica

| Calibration | Frequency | Acceptance Criteria | Corrective Action |
|---|---|---|---|
| Tune using PFK. | Prior to sample analysis and at the end of the analytical sequence (no time limit for the ending PFK analysis). | Resolving power ≥10,000 at m/z=304.9824 & m/z=380.9760 ± 5 ppm of expected mass. | 1) Retune instrument.<br>2) Reanalyze PFK.<br>3) End resolution acceptable "as is" – assess data for impact if resolution is less than 10,000 and narrate or reinject as necessary. |
| Column Performance Check Solution (CPSM). Solution includes the Window Defining Mix. | Prior to 12 hrs of sample analysis. | Used to set retention times of first and last eluters. CPSM must have ≤25% valley resolution for 2,3,7,8-TCDD | 1) Readjust windows.<br>2) Evaluate system.<br>3) Perform maintenance.<br>4) Reanalyze CPSM.<br>5) No corrective action is necessary if 2,3,7,8-TCDD is not detected and the % valley is greater than 25%. |
| (5 point ICAL) Multipoint calibration. | Initially and as required. | 1) I.S. = %RSD<30%<br>2) Natives = %RSD<20%<br>3) Retention time must be within -1 to +3 seconds of labeled I.S. or 0.005 RRT units.<br>4) Ion ratios within Table 5 limits, and I.S. S/N ≥10:1 and Natives S/N ≥2.5:1 | 1) Evaluate system.<br>2) Recalibrate.<br>3) If all criteria are met except #4 (ratio), evaluate impact, narrate and report if no impact is found. |
| Daily Continuing Calibration Verification standard (CCV). | Once per 12 hours, prior to sample analysis and at the end of the analytical sequence (no time limit for the ending CCV). | 1) %D of I.S. ≤30% from avg. RRF (ICAL). (Ending %D of I.S. ≤35% from avg. RRF).<br>2) %D of natives ≤20% from avg. RRF (ICAL). (Ending %D of natives ≤25% from avg. RRF).<br>3) Retention time must be within -1 to +3 seconds of labeled I.S. or 0.005 RRT units.<br>4) Ion ratios within Table 5 limits, and I.S. S/N ≥10:1 and Natives S/N ≥2.5:1<br>5) | 1) Evaluate system.<br>2) Evaluate data for usability.<br>3) Reanalyze (CCAL).<br>4) Recalibrate (ICAL) as necessary. |

## TABLE 4 SUMMARY OF INTERNAL QUALITY CONTROL PROCEDURES
## Method 8290 – TestAmerica

| QC Element | Frequency | Acceptance Criteria | Corrective Action |
|---|---|---|---|
| Internal Standards | Every sample, method blank, and LCS. | 1) Internal standard recovery within limits stated in Table 2. | 1) Check chromatography for interferences. If found, flag data.<br>2) Check S/N. If < 10:1, re-extract sample.<br>3) If S/N > 10:1, evaluate data usability, flag, narrate and report.<br>4) Check instrument and re-analyze the extract if a problem is found and corrected.<br>5) Re-extract and re-analyze adversely affected samples. |
| Method blank | 1 per analytical batch, not to exceed 20 field samples per matrix. | No target analyte concentrations above the reporting limit (RL). Exception: OCDD concentration in the method blank is allowed to be 5X the RL without narration.<br><br>Note "Totals" are not considered "target analytes" – no corrective action or flagging is necessary for positive totals in the method blank. | 1) Re-analyze method blank if instrument carryover is suspected.<br>2) If still exceeds and analyte concentration in sample < RL or > 10X blank concentration, narrate and report results.<br>3) If "J" qualified positives are in the method blank or OCDD < 5X the RL, then no corrective action is necessary. Flag and report<br>4) If non-compliant and analyte concentration in sample is between RL and 10X blank concentration, re-extract and re-analyze affected samples. |
| Laboratory Control Sample | 1 per analytical batch, not to exceed 20 field samples per matrix. | Refer to Table 2. | 1) Review Internal Standards, as above.<br>2) Evaluate data for usability.<br>3) If sample results are ND and RL are met, no action is required – narrate and report.<br>4) If samples have positives > RL, re-extract and re-analyze affected samples for analytes outside the acceptance criteria. |
| Duplicates | As per client request. | Refer to Table 2 and Table 3. | 1) Review data for usability.<br>2) Narrate outliers. |
| Matrix Spike | As per client request. | Refer to Table 2 and Table 3. | 3) Review data for usability.<br>4) Narrate outliers. |
| Matrix Spike Duplicate | As per client request. | Refer to Table 2 and Table 3. | 1) Review data for usability.<br>2) Narrate outliers. |

## TABLE 5 CRITERIA FOR ISOTOPIC RATIO MEASUREMENT FOR PCDDs AND PCDFs Method 8290 – TestAmerica

| Number of Chlorine Atoms | Ion Type | Theoretical Ratio | Control Limits ( ± 15%) |
|---|---|---|---|
| 4 | M/(M+2) | 0.77 | 0.65-0.89 |
| 5 | (M+2)/(M+4) | 1.55 | 1.32-1.78 |
| 6 | (M+2)/(M+4) | 1.24 | 1.05-1.43 |
| 6[a] | M/(M+2) | 0.51 | 0.43-0.59 |
| 7[b] | M/(M+2) | 0.44 | 0.37-0.51 |
| 7 | (M+2)/(M+4) | 1.04 | 0.88-1.20 |
| 8 | (M+2)/(M+4) | 0.89 | 0.76-1.02 |

[a] Used only for $^{13}$C-HxCDF (Internal Standard)
[b] Used only for $^{13}$C-HpCDF (Internal Standard)

## TABLE 6 PCDDs/PCDFs TOXICITY EQUIVALENCE FACTORS (TEF) Method 8290 – TestAmerica

| Analyte | TEF March 1989 (EPA 62/5-89/016) | TEF June 1998 WHO | TEF June 2005 WHO |
|---|---|---|---|
| Dioxins | | | |
| 2,3,7,8-TCDD | 1.0 | 1.0 | 1.0 |
| 1,2,3,7,8-PeCDD | 0.5 | 1.0 | 1.0 |
| 1,2,3,4,7,8-HxCDD | 0.1 | 0.1 | 0.1 |
| 1,2,3,6,7,8-HxCDD | 0.1 | 0.1 | 0.1 |
| 1,2,3,7,8,9-HxCDD | 0.1 | 0.1 | 0.1 |
| 1,2,3,4,6,7,8-HpCDD | 0.01 | 0.01 | 0.01 |
| OCDD | 0.001 | 0.0001 | 0.0003 |
| Furans | | | |
| 2,3,7,8-TCDF | 0.1 | 0.1 | 0.1 |
| 1,2,3,7,8-PeCDF | 0.05 | 0.05 | 0.03 |
| 2,3,4,7,8-PeCDF | 0.5 | 0.5 | 0.3 |
| 1,2,3,4,7,8-HxCDF | 0.1 | 0.1 | 0.1 |
| 1,2,3,6,7,8-HxCDF | 0.1 | 0.1 | 0.1 |
| 2,3,4,6,7,8-HxCDF | 0.1 | 0.1 | 0.1 |
| 1,2,3,7,8,9-HxCDF | 0.1 | 0.1 | 0.1 |
| 1,2,3,4,6,7,8-HpCDF | 0.01 | 0.01 | 0.01 |
| 1,2,3,4,7,8,9-HpCDF | 0.01 | 0.01 | 0.01 |
| OCDF | 0.001 | 0.0001 | 0.0003 |

## TABLE 8 PCDDs/PCDFs HOLDING TIMES AND CONTAINERS
## Method 8290 – TestAmerica

| Method | Extraction Holding Time | Containers (no preservative other than 4°C) |
|---|---|---|
| 8290 | 30 Days for soil and water | 4 oz jar for soil; 2x 1 Liter amber for water |

**Title:** **Analysis of Samples for Polychlorinated Dioxins and Furans by HRGC/HRMS**

**[Methods 8290, 8290A & TO-9A]**

**Approvals (Signature/Date):**

| | |
|---|---|
| Douglas Weir — Date 09/30/08<br>Technical Manager | Joe Schairer — Date 9/30/08<br>Health & Safety Manager / Coordinator |
| Pamela Schemmer — Date 9/30/08<br>Quality Assurance Manager | Karla Buechler — Date 10/1/08<br>Laboratory Director |

**Copyright Information:**
This documentation has been prepared by TestAmerica Laboratories, Inc. and its affiliates ("TestAmerica"), solely for their own use and the use of their customers in evaluating their qualifications and capabilities in connection with a particular project. The user of this document agrees by its acceptance to return it to TestAmerica upon request and not to reproduce, copy, lend, or otherwise disclose its contents, directly or indirectly, and not to use if for any other purpose other than that for which it was specifically provided. The user also agrees that where consultants or other outside parties are involved in the evaluation process, access to these documents shall not be given to said parties unless those parties also specifically agree to these conditions.

**THIS DOCUMENT CONTAINS VALUABLE CONFIDENTIAL AND PROPRIETARY INFORMATION. DISCLOSURE, USE OR REPRODUCTION OF THESE MATERIALS WITHOUT THE WRITTEN AUTHORIZATION OF TESTAMERICA IS STRICTLY PROHIBITED. THIS UNPUBLISHED WORK BY TESTAMERICA IS PROTECTED BY STATE AND FEDERAL LAW OF THE UNITED STATES. IF PUBLICATION OF THIS WORK SHOULD OCCUR THE FOLLOWING NOTICE SHALL APPLY:**

**©COPYRIGHT 2008 TESTAMERICA LABORATORIES, INC. ALL RIGHTS RESERVED.**

**Facility Distribution No.** Uncontrolled **Distributed To:** TestAmerica West Sacramento Bids Folder

## 1. SCOPE AND APPLICATION

1.1. This method provides procedures for the detection and quantitative measurement of 2,3,7,8-tetrachlorodibenzo-p-dioxin (2,3,7,8-TCDD), polychlorinated dibenzo-p-dioxins (tetra- through octachlorinated homologs; PCDDs), and polychlorinated dibenzofurans (tetra- through octachlorinated homologs; PCDFs) in a variety of environmental matrices at part-per-trillion (ppt) concentrations by SW 846 Method 8290 and 8290A. The analytical method calls for the use of high-resolution gas chromatography and high-resolution mass spectrometry (HRGC/HRMS) on purified sample extracts. An optional method for reporting the analytical results using a 2,3,7,8-TCDD toxicity equivalency factor (TEF) is also described. Table 1 lists the various sample types covered by this analytical protocol, the 2,3,7,8-TCDD-based method calibration limits and other pertinent information.

1.2. The sensitivity of this method is dependent upon the level of interferences within a given matrix.

1.3. This method is designed for use by analysts who are experienced with residue analysis and skilled in high-resolution gas chromatography/high resolution mass spectrometry (HRGC/HRMS).

1.4. Samples containing concentrations of specific congeners (PCDDs and PCDFs) that are greater than the calibration limit should be analyzed by a protocol designed for such concentrations, such as 8280A/B.

## 2. SUMMARY OF METHOD

2.1. This procedure uses matrix-specific extraction, analyte-specific cleanup, and high-resolution capillary column gas chromatography/high resolution mass spectrometry (HRGC/HRMS) techniques. Sample preparation is addressed in WS-IDP-0005.

2.2. One to two µL of the concentrated extract are injected into an HRGC/HRMS system capable of performing selected ion monitoring at resolving powers of at least 10,000 (10 percent valley definition).

2.3. The identification of ten of the 2,3,7,8-substituted congeners (Table 3), for which a $^{13}C$-labeled standard is included as a spiked compound, is based on their elution at their exact retention time (-1 to +3 seconds from the respective internal or recovery standard signal) and simultaneous detection of the two most abundant ions in the molecular ion region. All other identified PCDD/PCDF congeners are identified by their relative retention times based on the daily CCV standard , and the simultaneous detection of the two most abundant ions in the molecular ion region. Confirmation is based on a comparison of the ratio of the integrated ion abundance of the molecular ion species to their theoretical abundance ratio.

2.4. Quantification of the individual congeners, total PCDDs and total PCDFs is achieved in conjunction with the establishment of a multipoint (five points) calibration curve for each homolog, during which each calibration solution is analyzed once.

## 3. DEFINITIONS

3.1. Definitions of terms used in this SOP may be found in the glossary of the Quality Assurance Manual (QAM).

3.2. Data qualifiers are defined on each data report. Commonly used data qualifiers are defined in the QAM.

3.3. Polychlorinated dibenzo-p-dioxins (PCDDs) and polychlorinated dibenzofurans (PCDFs): compounds (Figure 1) that contain from one to eight chlorine atoms. The seventeen 2,3,7,8-substituted PCDDs and PCDFs are shown in Table 3. The number of isomers at different chlorination levels is shown in Table 4.

3.4. Homologous series: Defined as a group of chlorinated dibenzodioxins or dibenzofurans having a specific number of chlorine atoms.

3.5. Isomer: Chemical compounds that contain the same number of atoms of the same elements, but differ in structural arrangement and properties. For example, 1,2,3,4-TCDD and 2,3,7,8-TCDD are different structural isomers.

3.6. Congener: Any isomer of any homologous series.

3.7. Internal Standard: An internal standard is a $^{13}C$-labeled analog of a congener chosen from the compounds listed in Table 3. Internal standards are added to all samples including method blanks and quality control samples before extraction, and they are used to quantitate the concentration of the analytes. Nine internal standards are used in this method. There is one for each of the dioxin and furan homologs (except for OCDF) with the degree of chlorination ranging from four to eight. Additional internal standards may be added to act as retention time references, but they are not used for quantitation.

3.8. Recovery Standard: Two recovery standards are used to determine the percent recoveries for the internal standards. The $^{13}C$-1,2,3,4-TCDD is used to measure the percent recoveries of the tetra- and pentachlorinated internal standards while $^{13}C$-1,2,3,7,8,9-HxCDD is used to determine the recovery of the hexa-hepta- and octachlorinated internal standards. $^{13}C$-1,2,3,7,8,9-HxCDD also acts as a retention time reference for the unlabeled analog present in sample extracts. They are added to the final sample extract before HRGC/HRMS instrument analysis.

3.9. Estimated Detection Limit (EDL)/ Estimated Quantiation Limit (EQL): The sample specific estimated detection limit (EDL/EQL) is the concentration of a given analyte required to produce a signal with a peak height of at least 2.5 times the background noise level.

3.10. Estimated Maximum Possible Concentration (EMPC): The calculated concentration of a signal having the same retention time as a PCDD/PCDF congener, but which does not meet the other qualitative identification criteria defined in the method.

## 4. INTERFERENCES

4.1. Solvents, reagents, glassware and other sample processing hardware may yield discrete artifacts or elevated baselines that may cause misinterpretation of the chromatographic data. All of these materials must be demonstrated to be free from interferents under the conditions of analysis by running laboratory method blanks. Analysts shall not use PVC gloves.

4.2. The use of high-purity reagents and solvents helps minimize interference problems. Purification of solvents by distillation in all-glass systems may be necessary.

4.3. Re-use of glassware is to be minimized to avoid the risk of contamination.

4.4. Interferents co-extracted from the sample will vary considerably from matrix to matrix. PCDDs and PCDFs are often associated with other interfering chlorinated substances such as polychlorinated biphenyls (PCBs), polychlorinated diphenyl ethers (PCDPEs), polychlorinated naphthalenes, and polychlorinated xanthenes that may be found at concentrations several orders of magnitude higher than the analytes of interest. Retention times of target analytes must be verified using reference standards. These values must correspond to the retention time windows established. While certain clean-up techniques are provided as part of this method, unique samples may require additional cleanup steps to achieve lower detection limits.

4.5. A high-resolution capillary column (60m DB-5) is used to resolve as many PCDD and PCDF isomers as possible. However, no single column is known to resolve all isomers. The DB-225 column is used for the quantitation of 2,3,7,8-TCDF when 2,3,7,8-TCDD on the DB-5 column is detected.

## 5. SAFETY

Employees must abide by the policies and procedures in the Corporate Environmental Health and Safety Manual (CW-E-M-001), the West Sacramento Addendum to the Corporate EH&S Manual (WS-PEHS-002) and this document. This procedure may involve hazardous material, operations and equipment. This SOP does not purport to address all of the safety problems associated with its use. It is the responsibility of the user of the method to follow appropriate safety, waste disposal and health practices under the assumption that all samples and reagents

are potentially hazardous. Safety glasses, gloves, lab coats and closed-toes, nonabsorbent shoes are a minimum.

5.1. Specific Safety Concerns or Requirements

5.1.1. The effluents of sample splitters for the gas chromatograph and roughing pumps on the HRGC/HRMS system should pass through either a column of activated charcoal or be bubbled through a trap containing oil or high-boiling alcohols.

5.1.2. Eye protection that satisfies ANSI Z87.1, laboratory coat, and chemically resistant gloves must be worn while samples, standards, solvents, and reagents are being handled. Latex and vinyl gloves provide no protection against most of the organic solvents used in this method. Nitrile or similar gloves must be used. Latex gloves may be used for methanol.

5.1.3. Exposure to chemicals must be maintained as low as reasonably achievable, therefore all samples must be opened, transferred and prepared in a fume hood. Solvent and waste containers will be kept closed unless transfers are being made.

5.1.4. Laboratory procedures such as repetitive use of pipets, repetitive transferring of extracts, and manipulation of filled separatory funnels and other glassware represent a significant potential for repetitive motion or other ergonomic injuries. Laboratory associates performing these procedures are in the best position to realize when they are at risk for these types of injuries. Whenever a situation is found in which an employee is performing the same repetitive motion, the employee shall immediately bring this to the attention of their supervisor, manager, or the EH&S staff. The task will be analyzed to determine a better means of accomplishing it.

5.2. Primary Materials Used

The following is a list of the materials used in this method, which have a serious or significant hazard rating. **NOTE: This list does not include all materials used in the method. The table contains a summary of the primary hazards listed in the MSDS for each of the materials listed in the table.** A complete list of materials used in the method can be found in the reagents and materials section. Employees must review the information in the MSDS for each material before using it for the first time or when there are major changes to the MSDS.

| Material (1) | Hazards | Exposure Limit (2) | Signs and symptoms of exposure |
|---|---|---|---|
| Acetone | Flammable | 1000 ppm-TWA | Inhalation of vapors irritates the respiratory tract. May cause coughing, dizziness, dullness, and headache. |

| | | | |
|---|---|---|---|
| Hexane | Flammable<br>Irritant | 500 ppm-TWA | Inhalation of vapors irritates the respiratory tract. Overexposure may cause lightheadedness, nausea, headache, and blurred vision. Vapors may cause irritation to the skin and eyes. |
| Iso-octane | Flammable<br>Irritant | None established | Inhalation of vapors may cause nausea, headache, dizziness, loss of consciousness, irritation to upper respiratory tract, pain in throat and nose, coughing, wheezing, shortness of breath. |
| Methanol | Flammable<br>Poison<br>Irritant | 200 ppm-TWA | A slight irritant to the mucous membranes. Toxic effects exerted upon nervous system, particularly the optic nerve. Symptoms of overexposure may include headache, drowsiness and dizziness. Methyl alcohol is a defatting agent and may cause skin to become dry and cracked. Skin absorption can occur; symptoms may parallel inhalation exposure. Irritant to the eyes. |
| Methylene Chloride | Carcinogen<br>Irritant | 25 ppm-TWA<br>125 ppm-STEL | Causes irritation to respiratory tract. Has a strong narcotic effect with symptoms of mental confusion, light-headedness, fatigue, nausea, vomiting and headache. Causes irritation, redness and pain to the skin and eyes. Prolonged contact can cause burns. Liquid degreases the skin. May be absorbed through skin. |
| Tetradecane | Irritant | None established | Inhalation of vapors may cause difficulty breathing, headache, intoxication and central nervous system damage. |
| Toluene | Flammable<br>Poison<br>Irritant | 200 ppm-TWA<br>300 ppm-Ceiling | Inhalation may cause irritation of the upper respiratory tract. Symptoms of overexposure may include fatigue, confusion, headache, dizziness and drowsiness. Peculiar skin sensations (e. g. pins and needles) or numbness may be produced. Causes severe eye and skin irritation with redness and pain. May be absorbed through the skin. |
| 1 – Always add acid to water to prevent violent reactions. | | | |
| 2 – Exposure limit refers to the OSHA regulatory exposure limit. | | | |

## 6. EQUIPMENT AND SUPPLIES

6.1. High-Resolution Gas Chromatograph/High-Resolution Mass Spectrometer/Data System (HRGC/HRMS/DS).

6.1.1. The GC must be equipped for temperature programming. All required accessories must be available, such as syringes, gases, and capillary columns. The GC injection port must be designed for capillary columns. The use of splitless injection techniques is recommended. The use of a moving needle injection port is also acceptable. When using the method described in this protocol, a 2-µL injection volume is used consistently (i.e., the injection volumes for all extracts, blanks, calibration solutions and the performance check samples are 2 µL). 1 µL injections are allowed; however, laboratories are encouraged to remain consistent throughout the analyses by using the same injection volume at all times on a given HRGC/HRMS/DS.

6.1.2. Gas Chromatograph/Mass Spectrometer (GC/MS) Interface - The GC/MS interface components should withstand 350° C. The interface must be designed so that the separation of 2,3,7,8-TCDD from the other TCDD

isomers achieved in the gas chromatographic column is not appreciably degraded. Cold spots or active surfaces (adsorption sites) in the GC/MS interface can cause peak tailing and peak broadening. It is recommended that the GC column be fitted directly into the mass spectrometer ion source without being exposed to the ionizing electron beam. Graphite ferrules should be avoided in the injection port because they may adsorb the PCDDs and PCDFs. Vespel® or equivalent ferrules are recommended.

6.1.3. Mass Spectrometer - The static resolving power of the instrument must be maintained at a minimum of 10,000 (10 percent valley). The mass spectrometer must be operated in a selected ion monitoring (SIM) mode with a total cycle time (including the voltage reset time) of one second or less.

6.1.4. Data System - A dedicated data system is employed to control the rapid multiple ion monitoring process and to acquire the data. Quantification data (peak areas or peak heights) and SIM traces (displays of intensities of each ion signal being monitored including the lock-mass ion as a function of time) must be acquired during the analyses and stored. Quantifications may be reported based upon computer-generated peak areas or upon measured peak heights (chart recording). The data system must be capable of acquiring data for a minimum of 10 ions in a single scan. It is also recommended to have a data system capable of switching to different sets of ions (descriptors) at specified times during an HRGC/HRMS acquisition. The data system should be able to provide hard copies of individual ion chromatograms for selected gas chromatographic time intervals. It should also be able to acquire mass-spectral peak profiles and provide hard copies of peak profiles to demonstrate the required resolving power. The data system should also permit the measurement of noise on the base line.

6.2. GC Column

6.2.1. Due to poor separation of 2,3,7,8-TCDF from other TCDF isomers on the 60 m DB-5 column, a 30M DB-225 is used to quantitate 2,3,7,8-TCDF. This column is used when 2,3,7,8-TCDF detected.

6.2.2. In order to have an isomer-specific determination for 2,3,7,8-TCDD and to allow the detection of OCDD/OCDF within a reasonable time interval in one HRGC/HRMS analysis, the 60-m DB-5 fused-silica capillary column is recommended. At the beginning of each 12-hour period during which samples are analyzed and after tuning, acceptable compound separation on the GC column must be demonstrated through the analysis of a column performance check solution. Operating conditions known to produce acceptable results with the recommended column are shown in Table 7.

## 7. REAGENTS AND STANDARDS

7.1. Reagents

7.1.1. Distilled water demonstrated to be free of interferents

7.1.2. Potassium carbonate, anhydrous, analytical reagent.

7.1.3. Silica gel.

7.2. Solvents

7.2.1. High-purity, distilled-in-glass or highest available purity: Methylene chloride, hexane, methanol, tetradecane, isooctane, toluene, and acetone.

7.3. All calibration, daily internal standard, daily clean up recovery standards, and daily spiking solutions are stable for one year from preparation. After 1 year, solutions may be re-verified. The re-verified solution may be used for an additional year, or until there is evidence of compound degradation or concentration. The re-verification must be performed using an unexpired, not previously re-verified solution from a second lot or second vendor.

7.3.1. Sealed ampules may be used until the manufacturer's expiration date is exceeded. If no expiration date is provided, then the expiration date will be 10 years from the date the ampule is opened. The solvent level should be monitored prior to each use to assure there has been no concentration of the standard over time.

7.4. Calibration Solutions

7.4.1. High-Resolution Concentration Calibration Solutions (Table 5) - Five tetradecane solutions containing unlabeled (totaling 17) and carbon-labeled (totaling 16) PCDDs and PCDFs at known concentrations are used to calibrate the instrument. The concentration ranges are homolog dependent, with the lowest values associated with the tetra chlorinated dioxins and furans (0.5 pg/μL) and the highest for the octachlorinated congeners (2000 pg/μL).

7.4.2. Individual isomers that make up the high-resolution concentration calibration solutions are obtained from commercial sources and prepared in the laboratory. These standards are traceable back to EPA-supplied standard solutions.

7.4.3. Store the calibration solutions in appropriate containers and at room temperature in the dark.

7.4.4. Standards for method 8290A require storage at ≤6°C.

7.5. GC Column Performance Check Solution

7.5.1. This solution contains the first and last eluting isomers for each homologous series from tetra- through hepta-chlorinated congeners. The solution also contains a series of other TCDD isomers for the purpose of documenting the chromatographic resolution. The $^{13}$C-2,3,7,8-TCDD is also present. The laboratory is required to use tetradecane as the solvent and adjust the volume so that the final concentration does not exceed 100 pg/µL per congener. Table 8 summarizes the qualitative composition (minimum requirement) of this performance evaluation solution for the DB-5 column.

7.5.2. For the DB-225 column, the column performance check solution contains a series of TCDF isomers in addition to the 2,3,7,8-TCDF. The solution is injected and evaluated at the start of each analytical sequence on the DB-225 column to ensure that 2,3,7,8-TCDF is resolved from its closest eluting isomers with a baseline-to-valley ratio of ≤ 25%. Table 8 summarizes the qualitative composition (minimum requirement) of this performance evaluation solution on for the DB-225 column.

7.6. Field Surrogate Solution (air matrices)

7.6.1. This solution contains one $^{37}$Cl labeled analog (for Method TO-9/TO-9A) or one $^{37}$Cl and four $^{13}$C labeled analogs (for Method 0023) at the nominal concentration indicated in Table 2. It is used to assess sample collection and recovery procedures.

7.7. Sample Fortification Solution (Internal Standard)

7.7.1. This isooctane (or toluene) solution contains the nine internal standards at the nominal concentrations that are listed in Table 2. The solution contains at least one carbon-labeled standard for each homologous series, and it is used to measure the concentrations of the native substances. (Note that $^{13}$C-OCDF is not present in the solution.)

7.8. Recovery Standard Solution

7.8.1. This tetradecane solution contains two recovery standards ($^{13}$C-1,2,3,4-TCDD and $^{13}$C-1,2,3,7,8,HxCDD). An appropriate volume of this solution will be spiked into each sample extract before the final concentration step and HRGC/HRMS analysis.

## 8. SAMPLE COLLECTION, PRESERVATION AND STORAGE

8.1. The sample collection, shipping, handling, and chain-of-custody procedures are not described in this document. Sample collection personnel will, to the extent possible, homogenize samples in the field before filling the sample containers. This should minimize or eliminate the necessity for sample homogenization in the laboratory. The analyst should make a judgment, based on the appearance of the sample, regarding the necessity for additional mixing. If the sample is clearly non-homogeneous, the entire contents should be transferred to a glass or stainless steel pan for mixing with a stainless steel spoon or spatula before removal of a sample portion for analysis.

8.2. Grab and composite samples must be collected in glass containers.

8.3. Ambient air samples are collected on a Quartz Fiber Filter followed by a glass sleeve containing a polyurethane foam plug.

8.4. Samples from stationary sources are collected on glass or quartz fiber filters and XAD-2 Resin. (See SAC-ID-0009 for sample preparation procedures).

8.5. Conventional sampling practices must be followed. Do not rinse the bottle with sample before collection. Sampling equipment must be free of potential sources of contamination.

8.6. With the exception of the fish tissues, which must be stored at - 20°C, all samples should be stored at 4°C ± 2, extracted within 30 days and completely analyzed within 45 days of collection. The 30 day hold time is recommended. PCDDs and PCDFs have demonstrated stability for greater than one year.

8.7. All extracts must be stored capped, in the dark, at room temperature (approximately 21°C to 28°C). All extracts for method 8290A must be stored capped at ≤6°C.

## 9. QUALITY CONTROL

9.1. One method blank (MB) must be extracted with every process batch of similar matrix, not to exceed twenty (20) samples. The method blank is an aliquot of laboratory matrix (reagent water, Ottawa sand, sodium sulfate, PUF, XAD, filter, etc.) processed in the same manner and at the same time as the associated samples. Corrective actions must be documented on a Non-Conformance memo, then implemented when target analytes are detected in the method blank above the reporting limit or when surrogate recoveries are outside control limits. Re-extraction of the blank, other batch QC, and the affected samples are required when the method blank is deemed unacceptable. The method blank contains a PUF plug, XAD, or filter prepared from the same batch as the field samples whenever possible for air samples.

Certain programs, such as DOD, may require a more stringent evaluation of the method blank, for instance, that the blank not contain any analytes of interest at a concentration greater than ½ the lower calibration limit.

Note: Re-extraction of the blank, QC and affected samples for the air matrices (PUF, XAD, and filter) is not generally possible because the entire sample is consumed in the initial extraction.

9.1.1. The method blank must be spiked prior to extraction with the same amount of $^{13}C$-labeled internal standards as added to samples.

9.1.2. If method blank contamination is present, check solvents, reagents, fortification solutions, apparatus and glassware to locate and eliminate the source of contamination before any further samples are extracted and analyzed.

9.1.2.1. OCDD is a ubiquitous laboratory contaminant. A method blank and the associated samples are deemed acceptable if the OCDD concentration is <5x the specified reporting limit. Flag data appropriately. The analyst is expected to investigate and eliminate potential sources of systematic contamination.

9.1.2.2. If a target analyte is detected in the blank but the associated samples are ND (not detected), then the data may be reported, unless otherwise directed by the client. Note the action in the narrative.

9.1.2.3. If a target analyte is detected in the blank, but the concentration of the contaminant in the samples >10x the blank concentration, then the data may be reported, unless otherwise directed by the client. Note the action in the narrative.

9.1.3. If new batches of reagents or solvents contain interfering contaminants, purify or discard them.

9.2. A Laboratory Control Sample (LCS) must be extracted with every process batch of similar matrix, not to exceed twenty (20) samples. The LCS is an aliquot of laboratory matrix (e.g. water, Ottawa sand, sodium sulfate, PUF, XAD, etc.) spiked with analytes of known identity and concentration. The LCS must be processed in the same manner and at the same time as the associated samples. Corrective actions must be documented on a Non-Conformance memo, then implemented when recoveries of any spiked analyte is outside control limits provided on the LIMS or by the client. Re-extraction of the blank, other batch QC and all associated samples are required if the LCS is deemed unacceptable. See policy WS-PQA-003 for specific acceptance criteria. When associated with PUF samples, the LCS should contain a PUF plug prepared from the same batch as the field samples whenever possible.

Note: Re-extraction of the blank, QC and affected samples for the air matrices (PUF, XAD, and filter) is not generally possible because the entire sample is consumed in the initial extraction.

9.2.1. A LCS is deemed acceptable if control analytes are above upper control limits and the associated samples are ND, unless otherwise specified by the client. Note any actions in the narrative.

9.3. The assessment of matrix effects on method performance, as required by NELAP, is met in Method 8290 and 8290A, as in all isotope dilution techniques, with the use of isotopically labeled compounds. These isotopically labeled compounds are analogs of target analytes and are spiked into each sample. Therefore, matrix effects on method performance may be judged by the recovery of these analogs. Sample analysis acceptance is controlled by the performance of these analogs in each sample. A Matrix Spike/Matrix Spike Duplicate (MS/MSD or MS/SD) pair are extracted at the client's request only. Method 8290A does not address analysis of MS/MSD. An exception to this rule is a batch containing South Carolina samples for Method 8290. These batches must have an MS/MSD prepared. However, South Carolina requires Method 8290A after December 31, 2008. An MS/MSD pair are aliquots of a selected field sample spiked with analytes of known identity and concentration. When requested by the client, the MS/MSD pair shall be processed in the same manner and at the same time as the associated samples. Corrective actions must be documented on a Non-Conformance memo, then implemented when recoveries of any spike analyte is outside control limits provided on the LIMS or by the client. Re-extraction of the blank, the LCS, the selected field sample, and the MS/MSD may be required after evaluation and review. Matrix Spike/ Matrix Spike Duplicates are not generally applicable for air samples due to the difficulty in collecting identical or representative samples. An LCS/LCSD may be extracted to show precision of the extraction and analysis process.

9.3.1. Matrix Spike (MS): A sample, which is spiked with a known amount of the matrix spike fortification solution prior to the extraction step. The recoveries of the matrix spike compounds are determined; they are used to estimate the effect of the sample matrix upon the analytical methodology.

9.3.2. Matrix Spike Duplicate (MSD): A second portion of the same sample as used in the matrix spike analysis and which is treated like the matrix spike sample.

9.3.3. Locate the sample for the MS and MSD analyses (the sample may be labeled "double volume").

9.3.4. Add an appropriate volume of the matrix spike fortification solution, adjusting the fortification level as specified in Table 1, under IS Spiking Levels.

9.3.5. Analyze the MS and MSD samples as described in Section 11.

9.3.6. The results obtained from the MS and MSD samples (percent recovery and concentrations of 2,3,7,8-substituted PCDDs/PCDFs) should agree within 20 percent relative difference. Report all results and flag outliers.

9.3.7. Internal standard recoveries are flagged if they are outside the recovery goals. Re-extraction of affected samples should be performed if signal-to-noise for any internal standard is less than 10:1.

9.4. Duplicates

9.4.1. Upon client request, duplicates may be processed. Locate the sample specified for duplicate analysis, and prepare and analyze a second 10-g soil or sediment sample portion or 1-L water sample, or an appropriate amount of the type of matrix under consideration. Duplicate samples are not generally applicable for air samples due to the difficulty in collecting identical or representative samples. A duplicate injection of a sample extract may be performed to display instrument precision.

9.4.1.1. The results of the laboratory duplicates (percent recovery and concentrations of 2,3,7,8-substituted PCDD/PCDF compounds) should agree within 25 percent relative difference. Report all results and flag outliers.

9.4.2. Internal standard recoveries are flagged if they are outside the recovery goals. Re-extraction of affected samples should be performed if signal-to-noise for any internal standard is less than 10:1.

9.5. Surrogate/Clean Up Recovery Standard

A surrogate compound may be spiked into all air media samples prior to collection. For all other matrices, a clean up recovery standard is spiked following extraction and just prior to cleanup, in order to monitor relative loss of internal standard during both extraction and cleanup.

9.6. Internal Standards

9.6.1. Internal standards must be spiked into all samples, QC samples, and included in all calibrations.

9.6.2. For each sample and QC aliquot, calculate the percent recovery. The percent recovery should be between 40 percent and 135 percent for all nine internal standards.

9.6.3. A low or high percent recovery for a blank does not require discarding the analytical data but it may indicate a potential problem with future analytical data. Internal standard recoveries are flagged if they are outside the recovery

goals. Re-extraction of affected samples should be performed if signal-to-noise for any internal standard is less than 10:1.

9.7. Recommended Corrective Actions and Troubleshooting Steps

- Verify satisfactory instrument performance.
- If possible, verify that no error was made while weighing the sample portions.
- Review the analytical procedures with the performing laboratory personnel.

## 10. CALIBRATION

Calibration and Standardization requires a check of mass resolution (tuning), a check of chromatographic resolution, a verification of switching times (i.e. descriptors), and a calibration curve verification.

10.1. Tuning (Mass Resolution Check)

10.1.1. The mass spectrometer must be operated in the electron ionization mode. A static resolving power of at least 10,000 (10 percent valley definition) must be demonstrated at appropriate masses before any analysis is performed. Corrective actions must be implemented whenever the resolving power does not meet the requirement.

10.1.2. Chromatography time for PCDDs and PCDFs exceeds the long-term mass stability of the mass spectrometer. Because the instrument is operated in the high-resolution mode, mass drifts of a few ppm (e.g., 5 ppm in mass) can have serious adverse effects on instrument performance. Therefore, a mass-drift correction is mandatory. To that effect, it is recommended to select a lock-mass ion from the reference compound (PFK is recommended) used for tuning the mass spectrometer. The selection of the lock-mass ion is dependent on the masses of the ions monitored within each descriptor. Table 6 offers some suggestions for the lock-mass ions. However, an acceptable lock-mass ion at any mass between the lightest and heaviest ion in each descriptor can be used to monitor and correct mass drifts. The level of the reference compound (PFK) metered into the ion chamber during HRGC/HRMS analyses should be adjusted so that the amplitude of the most intense selected lock-mass ion signal (regardless of the descriptor number) does not exceed 10 percent of the full-scale deflection for a given set of detector parameters. Under those conditions, sensitivity changes that might occur during the analysis can be more effectively monitored.

*NOTE: Excessive PFK (or any other reference substance) may cause noise problems and contamination of the ion source resulting in downtime for source cleaning.*

10.1.3. By using a PFK molecular leak, tune the instrument to meet minimum required resolving power of 10,000 (10 percent valley) at m/z 304.9824 (PFK) or any other reference signal close to m/z 303.9016 (from TCDF). Verify that

the exact mass of m/z 380.9760 (PFK) is within 5 ppm of the required value. Note that the selection of the low- and high-mass ions must be such that they provide the largest voltage jump performed in any of the five mass descriptors (Table 6).

10.1.4. Documentation of the instrument resolving power must then be accomplished by recording the peak profile of the high-mass reference signal (m/z 380.9760). The minimum resolving power of 10,000 must be demonstrated on the high-mass ion while it is transmitted at a lower accelerating voltage than the low-mass reference ion, which is transmitted at full sensitivity. The format of the peak profile representation (Figure 3) must allow manual determination of the resolution, i.e., the horizontal axis must be a calibrated mass scale (amu or ppm per division). The result of the peak width measurement (performed at 5 percent of the maximum, which corresponds to the 10-percent valley definition) must appear on the hard copy and cannot exceed 100 ppm at m/z 380.9760 (or 0.038 amu at that particular mass).

10.2. Performance Checks

10.2.1. At the beginning of each 12-hour period during which samples are to be analyzed, aliquots of the 1) GC column performance check solution and 2) high-resolution concentration calibration solution No. 3 (HRCC-3) shall be analyzed to demonstrate adequate GC resolution and sensitivity, response factor reproducibility, and mass range calibration, and to establish the PCDD/PCDF retention time windows. (Note: A HRCC-2 or HRCC-4 may be acquired to meet the requirement of #2 above. This is to provide documentation of consistency for varying concentration levels, and to meet NELAC requirements). A mass resolution check shall also be performed to demonstrate adequate mass resolution using an appropriate reference compound (PFK is recommended). If the required criteria are not met, remedial action must be taken before any samples are analyzed. The mass resolution check will be taken at the beginning and completion of an analytical sequence. An analytical sequence may contain one or more 12 hour periods.

10.2.1.1. Method blanks or solvent blanks are used to demonstrate that the analytical system is free of contamination after the analysis of calibration standards or high level samples. The blank must demonstrate that the system has returned to appropriate background levels prior to continued analysis.

10.2.2. At a minimum, the ions listed in Table 6 for each of the five SIM descriptors must be monitored. Note that the PeCDF masses (M+2 & M+4) are also monitored in the first descriptor. This is because the first PeCDF isomer elutes closely to the final tetra isomer. The selection (Table 6) of the

molecular ions M and M+2 for $^{13}$C-HxCDF and $^{13}$C-HpCDF rather than M+2 and M+4 (for consistency) is to eliminate, even under high-resolution mass spectrometric conditions, interferences occurring in these two ion channels for samples containing high levels of native HxCDDs and HpCDDs. It is important to maintain the same set of ions for both calibration and sample extract analyses. The recommended mass spectrometer tuning conditions are based on the groups of monitored ions shown in Table 6.

10.2.2.1. The GC column performance check mixture, high-resolution concentration calibration solutions, and the sample fortification solutions may be obtained from the EMSL-CIN. However, if not available from the EMSL-CIN, standards can be obtained from other sources, and solutions can be prepared in the laboratory. Concentrations of all solutions containing 2,3,7,8-substituted native PCDDs/PCDFs, must be verified by comparison with second-source standard solutions.

10.3. Initial Calibration

Initial calibration is required before any samples are analyzed for PCDDs and PCDFs. Initial calibration is also required if any routine calibration (Section 10.5) does not meet the required criteria listed in Section 10.6.

10.3.1. Five high-resolution concentration calibration solutions, listed in Table 5, must be used for the initial calibration.

10.3.2. Tune the instrument with PFK.

10.3.3. Inject 1 or 2 µL of the GC column performance check solution and acquire SIM mass spectral data as described earlier in Section 6.1.3. The total cycle time must be ≤ 1 second. This is analyzed prior to a calibration curve to set descriptor windows only and may not otherwise be documented. The laboratory must not analyze samples until it is demonstrated and documented that the criterion listed in Section 13.1 is met.

10.3.3.1. Select the injection volume based upon the expected target analyte concentration, or expected matrix interferences.

10.3.3.2. The same injection volume must be used for all samples, QC, and standards.

10.3.4. By using the same GC and mass spectrometer conditions that produced acceptable results with the column performance check solution, analyze a 1 or 2-µL portion of each of the five concentration calibration solutions once with the following mass spectrometer operating parameter.

10.3.4.1. The total cycle time for data acquisition must be < 1 second. The total cycle time includes the sum of all dwell times and voltage reset times.

10.3.4.2. Acquire SIM data for all the ions listed in the five descriptors of Table 6.

10.3.4.3. The ratio of integrated ion current for the ions appearing in Table 9 (homologous series quantification ions) must be within the indicated control limits (set for each homologous series).

10.3.4.4. The ratio of integrated ion current for the ions belonging to the $^{13}C$ labeled internal and recovery standards must be within the control limits stipulated in Table 9.

*NOTE: Section 10.4.3 requires that ion ratios be within the specified control limits simultaneously in one run. It is the laboratory's responsibility to take corrective action if the ion abundance ratios are outside the limits.*

10.3.5. For each SICP and for each GC signal corresponding to the elution of a target analyte and of its labeled standards, the signal-to-noise ratio (S/N) must be better than or equal to 10. This measurement is suggested for any GC peak that has an apparent S/N of less than 5:1. The result of the calculation must appear on the SICP above the GC peak in question.

10.3.5.1. Referring to Table 5, calculate the 17 relative response factors (RRF) for unlabeled target analytes [RRF(n); n=1 to 17] relative to their appropriate internal standards (Table 5) and the nine RRFs for the labeled $^{13}C$ internal standards [RRF(m); m=18 to 26] relative to the two recovery standards according to the following formulae:

$$RRF(n) = \frac{A_x \times Q_{is}}{Q_x \times A_{is}} \qquad RRF(m) = \frac{A_{is} \times Q_{rs}}{Q_{is} \times A_{rs}}$$

Where:

$A_x$ = sum of the integrated ion abundances of the quantitation ions (Tables 6 and 5) for unlabeled PCDDs/PCDFs,

$A_{is}$ = sum of the integrated ion abundances of the quantitation ions (Tables 6 and 5) for the labeled internal standards,

$A_{rs}$ = sum of the integrated ion abundances of the quantitation ions (Tables 6 and 10) for the labeled recovery standards,

$Q_{is}$ = quantity of the internal standard injected (pg),

$Q_{rs}$ = quantity of the recovery standard injected (pg), and

$Q_x$ = quantity of the unlabeled PCDD/PCDF analyte injected (pg).

The RRF (n) and RRF (m) are dimensionless quantities; the units used to

express Qis, Qrs, and Qx must be the same.

10.3.5.2. Calculate the RRF(n)s and their respective percent relative standard deviations (%RSD) for the five calibration solutions:

$$\overline{RRF}(n) = (1/5)\sum_{j=1}^{5} RRF_j(n)$$

Where n represents a particular PCDD/PCDF (2,3,7,8-substituted) congener (n = 1 to 17; Table 5), and j is the injection number (or calibration solution number; j = 1 to 5).

10.3.5.3. The relative response factors to be used for the determination of the concentration of total isomers in a homologous series are calculated as follows:

10.3.5.3.1. For congeners that belong to a homologous series containing only one isomer (e.g., OCDD and OCDF) or only one 2,3,7,8-substituted isomer (Table 4; TCDD, PeCDD, HpCDD, and TCDF), the mean RRF used will be the same as the mean RRF determined in Section 10.3.5.2.

*NOTE: The calibration solutions do not contain $^{13}$C-OCDF as an internal standard. This is because a minimum resolving power of 12,000 is required to resolve the [M+6]+ ion of $^{13}$C-OCDF from the [M+2]+ ion of OCDD (and [M+4]+ from $^{13}$C-OCDF with [M]+ of OCDD). Therefore, the RRF for OCDF is calculated relative to $^{13}$C-OCDD.*

10.3.5.3.2. For congeners that belong to a homologous series containing more than one 2,3,7,8-substituted isomer (Table 4), the mean RRF used for those homologous series will be the mean of the RRFs calculated for all individual 2,3,7,8-substituted congeners using the equation below:

$$\overline{RRF}(k) = (1/t)\sum_{n=1}^{t} RRF_n$$

Where:

k = 27 to 30, with 27 = PeCDF;

28 = HxCDF; 29 = HxCDD; and 30 = HpCDF,

t = total number of 2,3,7,8-substituted isomers present in the calibration solutions (Table 5) for each homologous series (e.g., two for PeCDF, four for HxCDF, three for HxCDD, two for HpCDF).

*NOTE: Presumably, the HRGC/HRMS response factors of different isomers within a homologous series are different. However, this analytical protocol will make the assumption that the HRGC/HRMS responses of all isomers in a homologous series that do not have the 2,3,7,8-substitution patterns are the same as the responses of one or more of the 2,3,7,8-substituted isomer(s) in that homologous series.*

10.3.5.4. Relative response factors [RRF(m)] to be used for the determination of the percent recoveries for the nine internal standards are calculated as follows:

$$RRF(m) = \frac{A_{is}^{m} \times Q_{rs}}{Q_{is}^{m} \times A_{rs}}$$

$$\overline{RRF}(m) = (1/5)\sum_{j=1}^{5} RRF_j(m)$$

Where:

| | |
|---|---|
| m = | 18 to 26 (congener type) |
| j = | 1 to 5 (injection number), |
| $A_{is}^{m}$ = | sum of the integrated ion abundances of the quantitation ions (Tables 6 and 10) for a given internal standard (m = 18 to 26), |
| $A_{rs}$ = | sum of the integrated ion abundances of the quantitation ions (Tables 6 and 10) for a given internal standard (m = 18 to 26), |
| $Q_{rs}$ & $Q_{is}^{m}$ = | quantities of, respectively, the recovery standard (rs) and a particular internal standard (m) injected (pg), |
| RRF(m) = | relative response factor of a particular internal standard (m) relative to an appropriate recovery standard, as determined from one injection, and |
| $\overline{RRF}$(m) = | calculated mean relative response factor of a particular internal standard, as determined from the five initial calibration injections (j). |

10.4. Criteria for acceptable calibration

The criteria listed below for acceptable calibration must be met before sample analysis is performed.

10.4.1. The percent relative standard deviations for the mean response factors [RRF(n) and RRF(m)] from the 17 unlabeled standards must be ≤ 20 percent,

and those for the nine labeled reference compounds must be ≤ 30 percent.

*Note: If Method 8290A criteria are required for the project then both the percent standard relative standard deviation for the mean response factors for the 17 unlabeled standards and the nine labeled reference compounds must be ≤ 20 percent.*

10.4.2. The signal/noise ratio (S/N) for the GC signals present in every SICP (including the ones for the labeled standards) must be ≥ 10.

10.4.3. The isotopic ratios (Table 9) must be within the specified control limits.

*NOTE: If the criterion for acceptable calibration listed in Section 10.4.1 is met, the analyte-specific RRF can then be considered independent of the analyte quantity for the calibration concentration range. The mean RRFs will be used for all calculations until the routine calibration criteria (Section 10.6) are no longer met. At such time, new mean RRFs will be calculated from a new set of injections of the calibration solutions.*

10.5. Routine Calibration (continuing calibration check)

Routine calibrations must be performed at the beginning of (following a successful tune and GC column performance check) and after a 12 hour period. The routine calibration initiates the 12 hour clock during which samples may be subsequently analyzed. The last sample in the sequence must be injected within 12 hours of the routine calibration, followed by the analysis of a closing calibration check. An acceptable closing calibration check standard may be used to initiate the next 12 hour analysis sequence when consecutive acquisition sequences occur. The ending mass resolution check shall be performed after the closing calibration check of an analysis acquisition sequence or after the final bracketing standard when consecutive 12 hour acquisition sequences are run.

10.5.1. Inject 1 or 2 µL of the concentration calibration solution HRCC-3 containing 10 pg/µL of tetrachlorinated congeners, 50 pg/µL of penta-, hexa-, and heptachlorinated congeners, 100 pg/µL of octachlorinated congeners, and the respective internal and recovery standards (Table 5). By using the same HRGC/HRMS conditions as used in Sections 6.1.3 through 6.2, determine and document an acceptable calibration as provided in Section 10.6.

10.6. Criteria for Acceptable Routine Calibration

The following criteria must be met before further analysis is performed. If these criteria are not met, corrective action must be taken, including recalibration if needed.

10.6.1. The measured RRFs [RRF(n)] for the unlabeled standards obtained during the opening continuing calibration must be ± 20 percent of the mean values established during the initial calibration (Section 10.3.5.)

10.6.1.1. The bracketing continuing calibration must be ± 20% of the average RRF calculated from the initial calibration.

10.6.1.1.1. If the target compounds in the ending standard are less than or equal to ± 20% of the average RRF from the initial calibration, the RRFs of the initial calibration shall be used to quantitate the unlabeled isomers.

10.6.1.1.2. If the target analytes are greater than ± 20% but less or equal to ±25% and the samples are non-detect, the data is acceptable and this anomaly is documented. If these isomers are greater than ± 20% but less or equal to ±25% and are positive, an average RRF of the initial and ending daily standard is calculated and used to quantitate the concentration of the affected congener, and the anomaly is documented.

10.6.1.1.3. If the percent deviation of unlabeled compounds exceeds ± 25%, a new initial calibration is initiated within 2 hours following the analysis of the samples. Otherwise, reanalyze all sample extracts with positives for the failed target compounds.

10.6.2. The measured RRFs [RRF(m)] for the labeled standards obtained during the opening continuing calibration must be less than or equal to ± 30 percent of the mean values established during the initial calibration (Section 10.1.5).

10.6.2.1. The bracketing continuing calibration must be ± 30% of the average RRF calculated from the initial calibration.

10.6.2.1.1. If the labelled compounds in the ending standard are less than or equal to ±30% of the average RRF from the initial calibration, the RRFs of the initial calibration shall be used to quantitate the labeled isomers.

10.6.2.1.2. If the internal standard analytes are greater than ± 30% but less or equal to ±35%, an average RRF of the initial and ending daily standards is calculated and used to quantitate the concentration of the affected congener.

10.6.2.1.3. If the percent deviation of labeled compounds exceeds ± 35%, reanalyze samples if adversely impacted.

10.6.3. The ion-abundance ratios (Table 9) must be within the allowed control limits.

10.6.4. If either criteria in Sections 10.6.1 or 10.6.2 are not met, additional samples may not be analyzed. Sample data collected must be evaluated for usability. Narrate any reported data from the analytical sequence. If the ion-abundance ratio criterion is not satisfied, refer to the note in Section 10.3.4.4 for resolution.

10.6.5. If either one of the above criteria (Sections 10.6.1 and 10.6.2) cannot be satisfied, the entire initial calibration process (Section 10.3) must be repeated.

## 11. PROCEDURE

11.1. Procedural Variations

Procedural variations are allowed only if deemed necessary in the professional judgment of the supervisor to accommodate variation in sample matrix, radioactivity, chemistry, sample size, or other parameters. Any variation in procedure shall be completely documented using a Nonconformance memo and approved by a supervisor and QA/QC manager. If contractually required, the client will be notified. The Nonconformance memo will be filed in the project file.

Any deviations from this procedure identified after the work has been completed must be documented as a nonconformance, with a cause and corrective action described. A Nonconformance memo shall be used for this documentation.

11.2. Sample Dilution Procedure – Simple Dilutions

Dilutions from 2X to 50X can be achieved without respiking the final extract. The calculation to determine the final extract concentration is as follows:

(Concentration of the original extract) x (amount of aliquot taken) x (volume of diluted extract) = final concentration of dilution.

Ex: 50X dilution of original 10 g/20 µL sample

(10 g/20 µL) x (2 µL aliquot + 98 µL keeper) = 1 g/100 µL FV

Record the final sample concentration on the extract label.

11.3. Sample Dilution Procedure – Complex Dilutions

Complex dilution requiring respiking of IS and RS: Dilutions greater than 50x must be done by diluting and respiking the extract with IS and RS. This procedure may require serial dilution to be performed. If this procedure is done, then the sample size must be adjusted to reflect the aliquot taken.

Ex. 100X dilution (original sample with 10 g/20 µL final volume)

Take a 2 µL aliquot (1/10 of original sample) and add 18 µL of solvent keeper. Take a 2 µL aliquot of the dilution (1/100 of the original sample), respike with 1 mL IS and 20 µL RS, reduced to 20 µL FV.

Record the final sample concentration of the extract label.

11.4. Analytical Procedures

11.4.1. Inject a 1 or 2 µL aliquot of the extract into the GC, operated under the conditions previously used (Section 6.2) to produce acceptable results with the performance check solution.

11.4.2. Acquire SIM data according to Section 6.1.3. Use the same acquisition and mass spectrometer operating conditions previously used to determine the relative response factors (Section 10). Ions characteristic for polychlorinated diphenyl ethers are included in the descriptors listed in Table 6. Their presence is used to monitor their interference during the characterization of PCDFs.

## 12. CALCULATIONS/DATA REDUCTION

12.1. Identification Criteria

For a gas chromatographic peak to be identified as a PCDD or PCDF, it must meet all of the following criteria:

12.1.1. Retention Times

12.1.1.1. For 2,3,7,8-substituted congeners, which have an isotopically labeled internal or recovery standard present in the sample extract, the retention time (at maximum peak height) of the sample components (i.e., the two ions used for quantitation purposes listed in Table 6) must be within -1 and +3 seconds of the retention time of the peak for the isotopically labeled internal or recovery standard at m/z corresponding to the first characteristic ion (of the set of two; Table 6) to obtain a positive identification of these nine 2,3,7,8-substituted PCDDs/PCDFs and OCDD.

12.1.1.2. For 2,3,7,8-substituted compounds that do not have an isotopically labeled internal standard present in the sample extract, the relative retention time (relative to the appropriate internal standard) must fall within 0.005 relative retention time units of the relative retention times measured in the daily routine calibration. Identification of OCDF is based on its retention time relative to $^{13}$C-OCDD as determined from the daily routine calibration results.

12.1.1.3. For non-2,3,7,8-substituted compounds (tetra through octa; totaling 119 congeners), the retention time must be within the corresponding homologous retention time windows established by analyzing the column performance check solution.

12.1.1.4. The ion current responses for both ions used for quantitative purposes (e.g., for TCDDs: m/z 319.8965 and 321.8936) must reach a maximum simultaneously (± 2 seconds).

12.1.1.5. The ion current responses for both ions used for the labeled standards (e.g., for $^{13}$C-TCDD: m/z 331.9368 and m/z 333.9339) must reach a maximum simultaneously (± 2 seconds).

12.1.2. Ion Abundance Ratios

The integrated ion current for the two ions used for quantitation purposes must have a ratio between the lower and upper limits established for the homologous series to which the peak is assigned. See Table 9.

12.1.3. Signal-To-Noise Ratio

All ion current intensities must be >2.5 times noise level for positive identification of the PCDD/PCDF compound or a group of coeluting isomers. Figure 4 describes the procedure to be followed for the determination of the S/N.

12.1.4. Polychlorinated Diphenyl Ether Interferences

In addition to the above criteria, the identification of a GC peak as a PCDF can only be made if no signal having a S/N >2.5 is detected, at the same retention time (± 2 seconds), in the corresponding polychlorinated diphenyl ether (PCDPE, Table 6) channel.

12.2. For gas chromatographic peaks that have met the criteria outlined above, calculate the concentration of the PCDD or PCDF compounds using the formula:

$$C_x = \frac{A_x \times Q_{is}}{A_{is} \times W \times RRF(n)}$$

Where:

$C_x$ = concentration of unlabeled PCDD/PCDF congeners (or group of coeluting isomers within an homologous series) usually in pg/g or pg/L,

$Ax$ = sum of the integrated ion abundances of the quantitation ions (Table 6) for the unlabeled PCDD/PCDFs,

$Ais$ = sum of the integrated ion abundances of the quantitation ions (Table 6) for the labeled internal standards,

$Qis$ = quantity, in pg, of the internal standard added to the sample before extraction,

$W$ = sample size in g (if solid) or L (if liquid).

$RRF(n)$ = Calculated mean relative response factor for the analyte [RRF(n) with n = 1 to 17; Section 10.3.5].

If the analyte is identified as one of the 2,3,7,8-substituted PCDDs or PCDFs, RRF(n) is the value calculated using the equation in Section 10.3.5.1. However, if it is a non-2,3,7,8-substituted congener, the RRF(k) value is the one calculated using the equation in Section 10.3.5.3.2 [RRF(k) with k = 27 to 30].

12.3. Calculate the percent recovery of the nine internal standards measured in the sample extract, using the formula:

$$\text{Internal Standard Percent Recovery} = \frac{A_{is} \times Q_{rs}}{Q_{is} \times A_{rs} \times RRF(m)} \times 100$$

Where:

*Ais* = sum of the integrated ion abundances of the quantitation ions (Table 6) for the labeled internal standard,

*Ars* = sum of the integrated ion abundances of the quantitation ions (Table 6) for the labeled recovery standard; the selection of the recovery standard depends on the type of congeners (see Table 5, footnotes),

*Qis* = Quantity, in pg, of the internal standard added to the sample before extraction,

*Qrs* = Quantity, in pg, of the recovery standard added to the cleaned-up sample residue before HRGC/HRMS analysis, and

*RRF(m)* = calculated mean relative response factor for the labeled internal standard relative to the appropriate (see Table 5, footnotes) recovery standard. This represents the mean obtained in Section 10.3.5.4 [RRF(m) with m = 18 to 26].

12.4. If the concentration in the final extract of any of the fifteen 2,3,7,8-substituted PCDD/PCDF compounds (Table 3) exceeds the upper method calibration limit (MCL) for that compound listed in Table 1, the linear range of response versus concentration may have been exceeded. In such cases, the following corrective actions will be undertaken:

12.4.1. If the signal for the analyte has saturated the detector, a single dilution and reanalysis of the extract will be made in an attempt to bring the signal within the range of the detector. If the measured concentration of the analyte is still above the MCL, the reported concentration for the analyte will be qualified appropriately. Some programs, such as DOD QSM, require all compounds to be within the linear calibration range in which a serial dilution must be performed to achieve acceptable quantitation.

12.4.2. If the signal for the analyte is above the MCL but does not saturate the detector, the concentration will be reported and qualified appropriately. Some programs, such as DOD QSM, require all compounds to be within the linear calibration range in which a serial dilution must be performed to achieve acceptable quantitation.

12.5. In either case, **with the approval of the client**, the sample may be re-extracted and/or re-analyzed with one or more of the following adjustments made to the analytical procedure in order to provide a concentration which meets client-specific data quality objectives.

12.5.1. Extraction and analysis of a one tenth aliquot. This is appropriate if it will provide analyte concentration within the MCL and a representative sample aliquot.

12.5.2. Extraction of an aliquot large enough to be representative with an increased concentration of internal standard and surrogate spike components added prior to the extraction. The extract is then diluted either prior to or after the cleanup procedures.

12.5.3. Dilution of the original extract. Internal standard components are re-spiked at an appropriate level prior to analysis. In this case, the internal standard recoveries are taken from the original analysis.

12.6. For the other congeners (including OCDD and OCDF), however, report the measured concentration and indicate that the value exceeds the upper calibration standard.

12.7. The total concentration for each homologous series of PCDD and PCDF is calculated by summing up the concentrations of all positively identified isomers of each homologous series. Therefore, the total should also include the 2,3,7,8-substituted congeners. The total number of GC signals included in the homologous total concentration value may be specified in the report.

12.8. Sample-Specific Estimated Detection Limit

The sample-specific estimated detection limit (EDL) or estimated quantiation limit (EQL, 8290A) is the concentration of a given analyte required to produce a signal with a peak height of at least 2.5 times the background signal level. An EDL/EQL is calculated for each 2,3,7,8-substituted congener that is not identified, regardless of whether or not other non-2,3,7,8-substituted isomers are present. Two methods of calculation can be used, as follows, depending on the type of response produced during the analysis of a particular sample.

12.8.1. Samples giving a response for both quantitation ions (Tables 6 and 9) that is less than 2.5 times the background level.

Use the expression for EDL/EQL (specific 2,3,7,8-substituted PCDD/PCDF) below to calculate an EDL/EQL for each absent 2,3,7,8-substituted PCDD/PCDF (i.e., S/N <2.5). The background level is determined by measuring the range of the noise (peak to peak) for the two quantitation ions (Table 6) of a particular 2,3,7,8-substituted isomer within an homologous series, in the region of the SICP trace corresponding to the elution of the

internal standard (if the congener possesses an internal standard) or in the region of the SICP where the congener is expected to elute by comparison with the routine calibration data (for those congeners that do not have a $^{13}C$-labeled standard), multiplying that noise height by 2.5, and relating the product to an estimated concentration that would produce that product height.

*NOTE: The quantitation ions for both the unlabeled PCDDs/PCDFs and their internal standard must be consistently paired (using either both lighter mass ions or both heavier mass ions).*

Use the formula:

$$EDL_{Specific\,2,3,7,8-subst.PCDD/PCDF} = \frac{2.5 \times H_x \times Q_{is}}{H_{is} \times W \times RRF(n)}$$

Where:

EDL = estimated detection limit for homologous 2,3,7,8-substituted PCDDs/PCDFs. (also EQL for Method 8290A)

$H_x$ = height of the average noise for one of the quantitation ions (Table 6) for the unlabeled PCDDs/PCDFs.

$H_{is}$ = height of one of the quantitation ions (Table 6) for the labeled internal standards.

W, RRF (n), and Qis retain the same meanings as defined in Section 12.2

12.8.2. Samples characterized by a response above the background level with a S/N of at least 2.5 for at least one of the quantitation ions (Tables 6 and 9).

When the response of a signal having the same retention times as a 2,3,7,8-substituted congener has a S/N in excess of 2.5 and does not meet any of the other qualitative identification criteria listed in Section 11.8.4, calculate the "Estimated Maximum Possible Concentration" (EMPC) according to the expression shown in Section 12.1, except that Ax in Section 12.1 should represent the sum of the area under the smaller peak and of the other peak area calculated using the theoretical chlorine isotope ratio. Alternatively, an EDLEQL can be calculated using the above formula and the height of one of the ions as appropriate.

12.9. The relative percent difference (RPD) is calculated as follows:

$$RPD = \frac{|S_1 - S_2|}{(S_1 + S_2)/2} \times 100$$

$S_1$ and $S_2$ represent sample and duplicate sample results.

12.10. The 2,3,7,8-TCDD toxic equivalents (TEQ) of PCDDs and PCDFs present in the sample are calculated at the data user's request. This method assigns a 2,3,7,8-TCDD toxicity equivalency factor (TEF) to each of the seventeen 2,3,7,8-substituted PCDDs and PCDFs (Table 10). The 2,3,7,8-TCDD equivalent of the PCDDs and PCDFs present in the sample is calculated by summing the TEF times their concentration for each of the compounds or groups of compounds listed in Table 10.

12.11. Two-GC Column TEF Determination

12.11.1. The concentration of 2,3,7,8-TCDD (see note below), is calculated from the analysis of the sample extract on the 60m DB-5 fused silica capillary column. The chromatographic separation of this isomer must be $\leq$ 25% valley.

12.11.2. For samples that have a presumptive positive result for 2,3,7,8-TCDF on the DB-5 column, the extract is reanalyzed on a 30m DB-225 fused silica column. The GC/MS conditions are altered so that only the first descriptor (Table 6) is used. The reported concentration for 2,3,7,8-TCDF is then the result calculated from the DB-225 analysis. The chromatographic separation between 2,3,7,8-TCDF and any other unlabeled TCDF isomers must be < 25% valley using the column performance check solution for the DB-225 column. Concentration calculations are performed as in Section 12.1 through 12.6.

12.11.3. A DB-225 column can be used in the quantitative analysis of 2,3,7,8-TCDF and 2,3,7,8-TCDD analytes. Since the DB-225 cannot resolve 2,3,7,8-TCDD any positively identified 2,3,7,8-TCDD which exceeds the reporting limit shall be confirmed on a DB-5 column.

12.11.4. For a gas chromatographic peak to be identified as a 2,3,7,8-substituted PCDD/PCDF congener, it must meet the ion abundance (Section 11.5.4) and signal-to-noise ratio criteria. In addition, the retention time identification criterion described in Section 11.5.4 applies here for congeners for which a carbon-labeled analog is available in the sample extract. However, the relative retention time (RRT) of the 2,3,7,8-substituted congeners for which no carbon-labeled analogs are available must fall within 0.006 units of the carbon-labeled standard RRT. Experimentally, this is accomplished by using the attributions described in Table 11 and the results from the routine calibration run on the DB-5 column.

## 13. METHOD PERFORMANCE

13.1. The group/team leader has the responsibility to ensure that this procedure is performed by an associate who has been properly trained in its use and has the required expertise.

13.2. Method Detection Limit

The laboratory must generate a valid method detection limit for each analyte of interest. The MDL must be below the reporting limit for each analyte. The procedure for determination of the method detection limit is given in 40 CFR Part 136, Appendix B, and further defined in SOP SAC-QA-0006. MDLs are available in the Quality Assurance Department.

13.3. Initial Demonstration

The laboratory must make an initial demonstration of capability for each individual method. Demonstration of capability for both soil and water matrices is required. This requires analysis of QC check samples containing all of the standard analytes for the method. For some tests it may be necessary to use more than one QC check mix to cover all analytes of interest.

13.3.1. Four aliquots of the QC check sample are analyzed using the same procedures used to analyze samples, including sample preparation. The concentration of the QC check sample should be less than or equivalent to the LCS samples.

13.3.2. Calculate the average recovery and standard deviation of the recovery for each analyte of interest. Compare these to the laboratory generated QC Limits.

13.4. If any analyte does not meet the acceptance criteria the test must be repeated. Only those analytes that did not meet criteria in the first test need to be evaluated. Repeated failure for any analyte indicates the need for the laboratory to evaluate the analytical procedure and take corrective action.

It must be documented that all applicable system performance criteria specified were met before analysis of any sample is performed. Table 7 provides recommended GC conditions that can be used to satisfy the required criteria. A GC column performance check is only required at the beginning of each 12-hour period during which samples are analyzed.

13.5. GC Column Performance

13.5.1. Inject 1 or 2 µL of the column performance check solution and acquire selected ion monitoring (SIM) data as described in Section 6.1.3 within a total cycle time of < 1 second.

13.5.2. The chromatographic separation between 2,3,7,8-TCDD and the peaks representing any other TCDD isomers must be resolved with a valley of ≤ 25 percent (Figure 2),

Where:

$$\text{Valley Percent} = (x/y) \times 100$$

x = measured as in Figure 2 from the 2,3,7,8-closest TCDD eluting isomer,

y = the peak height of 2,3,7,8-TCDD

13.5.3. It is the responsibility of the laboratory to verify the conditions suitable for the appropriate resolution of 2,3,7,8-TCDD from all other TCDD isomers. The GC column performance check solution also contains the known first and last PCDD/PCDF eluters under the conditions specified in this protocol. Their retention times are used for qualitative and quantitative purposes. The peak for 2,3,7,8-TCDD must be labeled on the chromatograms. The chromatograms showing the first and last eluters of a homologous series must be included.

13.5.4. The retention times for the switching of SIM ions characteristic of one homologous series to the next higher homologous series must be indicated in the SICP. Accurate switching at the appropriate times is absolutely necessary for accurate monitoring of these compounds.

## 14. POLLUTION CONTROL

It is TestAmerica's policy to evaluate each method and look for opportunities to minimize waste generated (i.e., examine recycling options, ordering chemicals based on quantity needed, preparation of reagents based on anticipated usage and reagent stability). Employees must abide by the policies in Section 13 of the Corporate Environmental Health and Safety Manual (CW-E-M-001) for "Waste Management and Pollution Prevention."

## 15. WASTE MANAGEMENT

Waste management practices are conducted consistent with all applicable rules and regulations. Excess reagents, samples and method process wastes are disposed of in an accepted manner. Waste description rules and land disposal restrictions are followed. Waste disposal procedures are incorporated by reference to SOP WS-EHS-0001. The following waste streams are produced when this method is carried out.

15.1. Autovials containing assorted solvenst and extracts. As the autovials are removed from the instrument after analysis, they are collected in archive boxes and retained pending additional instructions. When no longer needed, the archive boxes are moved to the waste disposal area for disposal as PCB waste.

## 16. REFERENCES/CROSS REFERENCES

16.1. SW846, Test Methods for Evaluating Solid Waste, Third edition, Update III. Method 8290 Polychlorinated Dibenzodioxins (PCDDs) and Polychlorinated Dibenzofurans (PCDFs) by high-Resolution Mass Spectrometry September 1994.

16.2. SW846, Test Methods for Evaluating Solid Waste, Third edition, Update IV. Method 8290A Polychlorinated Dibenzodioxins (PCDDs) and Polychlorinated Dibenzofurans (PCDFs) by high-Resolution Mass Spectrometry February 2007.

16.3. SW846, Test Methods for Evaluating Solid Waste, Third edition, Update III. Method 0023A, Sampling Method for Polychlorinated Dibenzo-p-dioxins and Polychlorinated Dibenzofurans Emissions from Stationary Sources. December 1996.

16.4. Compendium Method TO-9A "Determination of Polychlorinated, Polybrominated, and Brominated, Cholorinated Dibenxo-p-dioxins and Dibenzofurans in Ambient Air", EPA compendium of Methods for the Determination of Toxic Organic Compounds in Ambient Air, second edition, January 1997.

16.5. Protocol for the Analysis of 2,3,7,8-TCDD by HRGC/HRMS". J. S. Stanley and T. M. Sack, EPA 600/4-86-004.

16.6. "Safety in Academic Chemistry Laboratories", American Chemical Society Publication, Committee on Chemical Safety (3rd Edition, 1979.)

16.7. "Carcinogens - Working with Carcinogens". Department of Health, Education, and Welfare, Public Health Service, Center for Disease Control. National Institute for Occupational Safety and Health. Publication No. 77-206, August 1977.

16.8. "OSHA Safety and Health Standards, General Industry", (29 CFR 1910) Occupational Safety and Health Administration, OSHA 2206 (revised January 1976).

## 17. METHOD MODIFICATIONS

17.1. Modifications from EPA 8290 and EPA 8290A

17.1.1. The methods specify that 2 µL injections are used throughout the analysis. If an instrument demonstrates adequate sensitivity and chromatographic resolution, then the analyst may use 1 µL injections for all performance checks, standards, QC samples, and samples.

17.1.2. In Section 2.7 of Method 8290 and 8290A, a retention time window of 0.005 RT units is used to tentatively identify unlabeled PCDD/PCDFs for which there are no corresponding labeled internal standards. All available labeled internal standards are used; therefore, a retention time window of -1 to +3 seconds is used to identify all compounds. See Section 7.8.4.1 of Method 8290 and 7.9 of Method 8290A.

17.1.3. Tetradecane instead of nonane is used as the final solvent to increase the stability of extracts and standards. Tetradecane is less volatile than nonane. Loss of analyte as a result of solvent incompatibility is monitored through recovery checks and calibration acceptance criteria.

17.2. Modifications from TO-9A method

17.2.1. The $^{37}$CL-2,3,7,8-TCDD surrogate is present at varying levels in the calibration curve (0.5-200 pg/ µL).

17.2.2. The laboratory uses 2 labeled recovery standard for the quantitation of labeled internal standards.

17.2.3. The final volume is adjusted to 20 µL in tetradecane.

17.2.4. Calibration and quantitation are performed in accordance to this SOP.

## 18. ATTACHMENTS

18.1. Table 1 - Types of Matrices

18.2. Table 2 - Composition of the Sample Fortification and Recovery Standard Solutions.

18.3. Table 3 - The Fifteen 2,3,7,8-Substituted PCDD and PCDF Congeners

18.4. Table 4 - Isomers of Chlorinated Dioxins and Furans

18.5. Table 5 - Concentrations of Calibration Solutions

18.6. Table 6 - Ions Monitored for PCDDs/PCDFs

18.7. Table 7 - Recommended GC Operating Conditions

18.8. Table 8 - Congeners in the GC Performance Evaluation Solution (DB-5)

18.9. Table 9 - Theoretical Ion Abundance Ratios and Control Limits

18.10. Table 10 - 2,3,7,8-TCDD Equivalent Factors

18.11. Table 11 - TEF: Analyte Relative Retention Time Reference Attributes

18.12. Figure 1 - Compound Structure

18.13. Figure 2 - GC Performance Check Chromatogram on the DB-5 Column

18.14. Figure 3 - PFK Peak Profile

18.15. Figure 4 - Manual Determination of Signal-to-Noise

18.16. Appendix A - Periodic Wipe Test Performance

## 19. REVISION HISTORY

19.1. WS-ID-0005, Revision 7, Effective 10/02/2008

19.1.1. Updated to TestAmerica format.

19.1.2. Updated Table 9.

19.1.3. Sample preparation moved to SOP WS-IDP-0005

19.1.4. Added 8290A references.

19.1.4.1. Estimated Quantitation Limit (EQL).

19.1.4.2. Extract and standard storage.

19.1.4.3. Removal of MS/MSD.

19.1.4.4. Change to calibration criteria for labeled compounds.

19.1.5. Editorial changes.

19.2. WS-ID-0005, Revision 6.7, Effective 8/21/2008

19.2.1. Changed the word "toluene" to "acetone" in 7.11.2.

19.3. WS-ID-0005, Revision 6.6, Effective 4/9/2008

19.3.1. Added South Carolina rule to prepare an MS/MSD with every batch.

19.3.2. Modified to include extraction and analysis of ambient air samples collected in filter/PUF material.

19.4. SAC-ID-0005, Revision 6.5, Effective 1/09/2007

19.5. SAC-ID-0005, Revision 6.4, Effective 08/29/2005

19.6. SAC-ID-0005, Revision 6.3, Effective 9/20/2004

19.7. SAC-ID-0005, Revision 6.2, Effective 02/24/2004

19.8. SAC-ID-0005, Revision 6.1, Effective 11/19/2003

19.9. SAC-ID-0005, Revision 6, Effective 12/15/2002

19.10. SAC-ID-0005, Revision 5, Effective 7/13/2001

19.11. SAC-ID-0005, Revision 4, Effective 9/11/1998

**TABLE 1**

**Types of Matrices, Sample Sizes and 2,3,7,8-TCDD-Based Method Calibration Limits (Parts per Trillion)**

| | Water | Soil Sediment Paper Pulp | Fly Ash | Human/ Fish Tissue | Adipose Tissue | Sludges, Fuel Oil | Still-Bottom | Ambient or Source Samples |
|---|---|---|---|---|---|---|---|---|
| Lower MCL(a) | 0.01 | 1.0 | 2.0 | 1.0 | 2.0 | 10 | 20 | 40 |
| Upper MCL(a) | 4.0 | 400 | 400 | 400 | 400 | 2000 | 4000 | 8000 |
| Weight (g) | 1000 | 10 | 10 | 10 | 10 | 2.0 | 1.0 | 1 sample |
| | | | | | | | | |
| IS Spiking Levels (ng) | 2.0 | 2.0 | 2.0 | 2.0 | 2.0 | 2.0 | 2.0 | 4.0 |
| | | | | | | | | |
| Final Extract Volume (μL) | 20 | 20 | 20 | 20 | 20 | 20 | 20 | 20 |

(a) For other congeners, multiply the values by 1 for TCDF, by 5 for PeCDD/PeCDF/HxCDD/HxCDF/HpCDD/HpCDF, and by 10 for OCDD/OCDF.

## TABLE 2

### Composition of the Sample Fortification and Recovery Standard Solutions

| Analyte | Sample Fortification Solution Concentration pg/µL; Solvent: Isooctane | Recovery Standard Solution Concentration pg/µL; Solvent: Tetradecane |
|---|---|---|
| $^{13}$C-2,3,7,8-TCDD | 2[a], 100[c] | -- |
| $^{13}$C -2,3,7,8-TCDF | 2[a], 100[c] | -- |
| $^{13}$C -1,2,3,4-TCDD | -- | 100 |
| $^{13}$C -1,2,3,7,8-PeCDD | 2[a], 100[c] | -- |
| $^{13}$C -1,2,3,7,8-PeCDF | 2[a], 100[c] | -- |
| | | |
| $^{13}$C -1,2,3,6,7,8-HxCDD | 2[a], 100[c] | -- |
| $^{13}$C -1,2,3,4,7,8-HxCDF[d] | 2[a], 100[c] | -- |
| $^{13}$C -1,2,3,7,8,9-HxCDD | -- | 100 |
| | | |
| $^{37}$Cl-2,3,7,8-TCDD[b][c] | 0.8[b], 100[c] | |
| | 100[c] | |
| $^{13}$C -2,3,4,7,8-PeCDF[c] | 100[c] | |
| $^{13}$C -1,2,3,6,7,8-HxCDF[c][d] | 100[c] | |
| $^{13}$C -1,2,3,4,7,8-HxCDD[c] | 100[c] | |
| $^{13}$C -1,2,3,4,7,8,9-HpCDD[c] | 100[c] | |
| | | |
| $^{13}$C -1,2,3,4,6,7,8-HpCDD | 2[a], 100[c] | -- |
| $^{13}$C -1,2,3,4,6,7,8-HpCDF | 2[a], 100[c] | -- |
| | | |
| $^{13}$C -OCDD | 4[a], 200[c] | -- |

(a) Standard 8290, 8290A, Method 23, Method 0023A, TO9 and TO9A Sample Fortification Solution concentrations
(b) Method TO9 and TO9A surrogate concentrations
(c) Method 23 and Method 0023A surrogate concentrations
(d) $^{13}$C-1,2,3,6,7,8-HxCDF is used as a Sample Fortification Solution and $^{13}$C -1,2,3,4,7,8-HxCDF is used as a surrogate solution in Method 23 and Method 0023A

## TABLE 3

**The Seventeen 2,3,7,8-Substituted PCDD and PCDF Congeners**

| PCDD | PCDF |
|---|---|
| 2,3,7,8-TCDD(*) | 2,3,7,8-TCDF(*) |
| 1,2,3,7,8-PeCDD(*) | 1,2,3,7,8-PeCDD(*) |
| 1,2,3,6,7,8-HxCDD(*) | 2,3,4,7,8-PeCDF |
| 1,2,3,4,7,8-HxCDD | 1,2,3,6,7,8-HxCDF |
| 1,2,3,7,8,9-HxCDD(+) | 1,2,3,7,8,9-HxCDF |
| 1,2,3,4,6,7,8-HpCDD(*) | 1,2,3,4,7,8-HxCDF(*) |
| 1,2,3,4,5,6,7,8-OCDD(*) | 2,3,4,6,7,8-HxCDF |
| | 1,2,3,4,6,7,8-HpCDF(*) |
| | 1,2,3,4,7,8,9-HpCDF |
| | 1,2,3,4,5,6,7,8-OCDF |

(*)The $^{13}C$ -labeled analog is used as an internal standard.
(+)The $^{13}C$ -labeled analog is used as a recovery standard.

**TABLE 4**

**Isomers of Chlorinated Dioxins and Furans as a Function of the Number of Chlorine Atoms**

| # of Chlorine Atoms | # of Dioxin Isomers | # of 2,3,7,8 Isomers | # of Furan Isomers | # of 2,3,7,8 Isomers |
|---|---|---|---|---|
| 1 | 2 | --- | 4 | --- |
| 2 | 10 | --- | 16 | --- |
| 3 | 14 | --- | 28 | --- |
| 4 | 22 | 1 | 38 | 1 |
| 5 | 14 | 1 | 28 | 2 |
| 6 | 10 | 3 | 16 | 4 |
| 7 | 2 | 1 | 4 | 2 |
| 8 | 1 | 1 | 1 | 1 |
| **Total** | **75** | **7** | **135** | **10** |

## TABLE 5

### High Resolution Concentration Calibration Solutions

| | Compound | Concentration (ng/mL) | | | | |
|---|---|---|---|---|---|---|
| RRF (n)(m) | | CS1 | CS2 | CS3 (VER(6)) | CS4 | CS5 |
| | Native CDDs and CDFs | | | | | |
| 1 | 2,3,7,8-TCDD | 0.5 | 2 | 10 | 40 | 200 |
| 2 | 2,3,7,8-TCDF | 0.5 | 2 | 10 | 40 | 200 |
| 3 | 1,2,3,7,8-PeCDD | 2.5 | 10 | 50 | 200 | 1000 |
| 4 | 1,2,3,7,8-PeCDF | 2.5 | 10 | 50 | 200 | 1000 |
| 5 | 2,3,4,7,8-PeCDF | 2.5 | 10 | 50 | 200 | 1000 |
| 6 | 1,2,3,4,7,8-HxCDD | 2.5 | 10 | 50 | 200 | 1000 |
| 7 | 1,2,3,6,7,8-HxCDD | 2.5 | 10 | 50 | 200 | 1000 |
| 8 | 1,2,3,7,8,9-HxCDD | 2.5 | 10 | 50 | 200 | 1000 |
| 9 | 1,2,3,4,7,8-HxCDF | 2.5 | 10 | 50 | 200 | 1000 |
| 10 | 1,2,3,6,7,8-HxCDF | 2.5 | 10 | 50 | 200 | 1000 |
| 11 | 1,2,3,7,8,9-HxCDF | 2.5 | 10 | 50 | 200 | 1000 |
| 12 | 2,3,4,6,7,8-HxCDF | 2.5 | 10 | 50 | 200 | 1000 |
| 13 | 1,2,3,4,6,7,8-HpCDD | 2.5 | 10 | 50 | 200 | 1000 |
| 14 | 1,2,3,4,6,7,8-HpCDF | 2.5 | 10 | 50 | 200 | 1000 |
| 15 | 1,2,3,4,7,8,9-HpCDF | 2.5 | 10 | 50 | 200 | 1000 |
| 16 | OCDD | 5.0 | 20 | 100 | 400 | 2000 |
| 17 | OCDF | 5.0 | 20 | 100 | 400 | 2000 |
| | Labeled CDDs and CDFs | | | | | |
| 18 | $^{13}C_{12}$-2,3,7,8-TCDD | 100 | 100 | 100 | 100 | 100 |
| 19 | $^{13}C_{12}$-2,3,7,8-TCDF | 100 | 100 | 100 | 100 | 100 |
| 20 | $^{13}C_{12}$-1,2,3,7,8-PeCDD | 100 | 100 | 100 | 100 | 100 |
| 21 | $^{13}C_{12}$-1,2,3,7,8-PeCDF | 100 | 100 | 100 | 100 | 100 |
| | $^{13}C_{12}$-2,3,4,7,8-PeCDF | 100 | 100 | 100 | 100 | 100 |
| | $^{13}C_{12}$-1,2,3,4,7,8-HxCDD | 100 | 100 | 100 | 100 | 100 |
| 22 | $^{13}C_{12}$-1,2,3,6,7,8-HxCDD | 100 | 100 | 100 | 100 | 100 |
| 23 | $^{13}C_{12}$-1,2,3,4,7,8-HxCDF | 100 | 100 | 100 | 100 | 100 |
| | $^{13}C_{12}$-1,2,3,6,7,8-HxCDF | 100 | 100 | 100 | 100 | 100 |
| | $^{13}C_{12}$-1,2,3,7,8,9-HxCDF | 100 | 100 | 100 | 100 | 100 |
| | $^{13}C_{12}$-2,3,4,6,7,8-HxCDF | 100 | 100 | 100 | 100 | 100 |
| 24 | $^{13}C_{12}$-1,2,3,4,6,7,8-HpCDD | 100 | 100 | 100 | 100 | 100 |
| 25 | $^{13}C_{12}$-1,2,3,4,6,7,8-HpCDF | 100 | 100 | 100 | 100 | 100 |
| | $^{13}C_{12}$-1,2,3,4,7,8,9- | 100 | 100 | 100 | 100 | 100 |

| | Compound | Concentration (ng/mL) | | | | |
|---|---|---|---|---|---|---|
| RRF (n)(m) | | CS1 | CS2 | CS3 (VER(6)) | CS4 | CS5 |
| | HpCDF | | | | | |
| 26 | $^{13}C_{12}$-OCDD | 200 | 200 | 200 | 200 | 200 |
| | Cleanup Standard/ FS | | | | | |
| | $^{37}Cl_4$-2,3,7,8-TCDD | 0.5 | 2 | 10 | 40 | 200 |
| | Recovery Standards | | | | | |
| | $^{13}C_{12}$-1,2,3,4-TCDD | 100 | 100 | 100 | 100 | 100 |
| | $^{13}C_{12}$-1,2,3,7,8,9-HxCDD | 100 | 100 | 100 | 100 | 100 |

**TABLE 6***

Ions Monitored for HRGC/HRMS Analysis of PCDDs/PCDFs

| Descriptor | Accurate[a] Mass | Ion ID | Elemental Composition | Analyte |
|---|---|---|---|---|
| 1 | 303.9016 | M | $C_{12}H_4{}^{35}Cl_4O$ | TCDF |
| | 305.8987 | M+2 | $C_{12}H_4{}^{35}Cl_3{}^{37}ClO$ | TCDF |
| | 315.9419 | M | $^{13}C_{12}H_4{}^{35}Cl_4O$ | TCDF (S) |
| | 317.9389 | M+2 | $^{13}C_{12}H_4{}^{35}Cl_3{}^{37}ClO$ | TCDF (S) |
| | 319.8965 | M | $C_{12}H_4{}^{35}Cl_4O_2$ | TCDD |
| | 321.8936 | M+2 | $C_{12}H_4{}^{35}Cl_3{}^{37}ClO_2$ | TCDD |
| | 331.9368 | M | $^{13}C_{12}H_4{}^{35}Cl_4O_2$ | TCDD (S) |
| | 333.9338 | M+2 | $^{13}C_{12}H_4{}^{35}Cl_3{}^{37}ClO_2$ | TCDD (S) |
| | 375.8364 | M+2 | $C_{12}H_4{}^{35}Cl_5{}^{37}ClO$ | HxCDPE |
| | [354.9792] | LOCK | $C_9F_{13}$ | PFK |
| 2 | 339.8597 | M+2 | $C_{12}H_3{}^{35}Cl_4{}^{37}ClO$ | PeCDF |
| | 341.8567 | M+4 | $C_{12}H_3{}^{35}Cl_3{}^{37}Cl_2O$ | PeCDF |
| | 351.9000 | M+2 | $^{13}C_{12}H_3{}^{35}Cl_4{}^{37}ClO$ | PeCDF (S) |
| | 353.8970 | M+4 | $^{13}C_{12}H_3{}^{35}Cl_4{}^{37}ClO$ | PeCDF (S) |
| | 355.8546 | M+2 | $C_{12}H_3{}^{35}Cl_4{}^{37}ClO_2$ | PeCDD |
| | 357.8516 | M+4 | $C_{12}H_3{}^{35}Cl_3{}^{37}Cl_2O_2$ | PeCDD |
| | 367.8949 | M+2 | $^{13}C_{12}H3{}^{35}Cl_4{}^{37}ClO_2$ | PeCDD (S) |
| | 369.8919 | M+4 | $^{13}C_{12}H3{}^{35}Cl_3{}^{37}Cl_2O_2$ | PeCDD (S) |
| | 409.7974 | M+2 | $C_{12}H_3{}^{35}Cl_6{}^{37}ClO$ | HpCDPE |
| | [354.9792] | LOCK | $C_9F_{13}$ | PFK |
| 3 | 373.8208 | M+2 | $C_{12}H_2{}^{35}Cl_5{}^{37}ClO$ | HxCDF |
| | 375.8178 | M+4 | $C_{12}H_2{}^{35}Cl_4{}^{37}Cl_2O$ | HxCDF |
| | 383.8639 | M | $^{13}C_{12}H_2{}^{35}Cl_6O$ | HxCDF (S) |
| | 385.8610 | M+2 | $^{13}C_{12}H_2{}^{35}Cl_5{}^{37}ClO$ | HxCDF (S) |
| | 389.8156 | M+2 | $C_{12}H_2{}^{35}Cl_5{}^{37}ClO_2$ | HxCDD |
| | 391.8127 | M+4 | $C_{12}H_2{}^{35}Cl_4{}^{37}Cl_2O_2$ | HxCDD |
| | 401.8559 | M+2 | $^{13}C_{12}H_2{}^{35}Cl_5{}^{37}ClO_2$ | HxCDD (S) |
| | 403.8529 | M+4 | $^{13}C_{12}H_2{}^{35}Cl_4{}^{37}Cl_2O_2$ | HxCDD (S) |

**TABLE 6 (cont.)***

Ions Monitored for HRGC/HRMS Analysis of PCDDs/PCDFs

| Descriptor | Accurate[a] Mass | Ion ID | Elemental Composition | Analyte |
|---|---|---|---|---|
| 4 | 407.7818 | M+2 | $C_{12}H^{35}Cl_6{}^{37}ClO$ | HpCDF |
| | 409.7788 | M+4 | $C_{12}H^{35}Cl_5{}^{37}Cl_2O$ | HpCDF |
| | 417.8250 | M | $^{13}C_{12}H^{35}Cl_7O$ | HpCDF (S) |
| | 419.8220 | M+2 | $^{13}C_{12}H^{35}Cl_6{}^{37}ClO$ | HpCDF |
| | 423.7767 | M+2 | $C_{12}H^{35}Cl_6{}^{37}ClO_2$ | HpCDD |
| | 425.7737 | M+4 | $C_{12}H^{35}Cl_5{}^{37}Cl_2O_2$ | HpCDD |
| | 435.8169 | M+2 | $^{13}C_{12}H^{35}Cl_6{}^{37}ClO_2$ | HpCDD (S) |
| | 437.8140 | M+4 | $^{13}C_{12}H^{35}Cl_5{}^{37}CL_2O_2$ | HpCDD (S) |
| | 479.7165 | M+4 | $C_{12}H^{35}CL_7{}^{37}Cl_2O$ | NCDPE |
| | [430.9728] | LOCK | $C_9F_{17}$ | PFK |
| 5 | 441.7428 | M+2 | $C_{12}{}^{35}Cl_7{}^{37}ClO$ | OCDF |
| | 443.7399 | M+4 | $C_{12}{}^{35}Cl_6{}^{37}Cl_2O$ | OCDF |
| | 457.7377 | M+2 | $C_{12}{}^{35}Cl_7{}^{37}ClO_2$ | OCDD |
| | 459.7348 | M+4 | $C_{12}{}^{35}Cl_6{}^{37}Cl_2O_2$ | OCDD |
| | 469.7780 | M+2 | $^{13}C1_2{}^{35}Cl_7{}^{37}ClO_2$ | OCDD (S) |
| | 471.7750 | M+4 | $^{13}C1_2{}^{35}Cl_6{}^{37}Cl_2O_2$ | OCDD (S) |
| | 513.6775 | M+4 | $^{13}C1_2{}^{35}Cl_8{}^{37}Cl_2O$ | DCDPE |
| | [442.9728] | LOCK | $C_{10}F_{17}$ | PFK |

[a] The following nuclidic masses were used:

| | | | |
|---|---|---|---|
| H = | 1.007825 | O = | 15.994915 |
| C = | 12.000000 | $^{35}Cl$ = | 34.968853 |
| $^{13}C$ = | 13.003355 | $^{37}Cl$ = | 36.965903 |
| F = | 18.9984 | | |

S = Internal/recovery standard

*The homologous groups for functions 1-3 do not use the same lockmass as described in Table 6. They use masses 316.9824, 366.9792, and 380.9760, respectively.

## TABLE 7

### Recommended GC Operating Conditions

The GC Operating Conditions (Temperatures (°C), and Times (minutes)) Are as Follows:

Injector Temperature: 280°C
Interface Temperature: 280°C
Initial Temperature and Time: 190°C / 1 Minute

Temperature Program: 190°C, increasing at a rate of 4°C per minute up to 240°C, and maintaining at this temperature until the last of the tetra- group has eluted from the column. (The total time required for this is approximately 25 minutes, depending on the length of the column). The maintained temperature of 240°C is then increased to 320°C at the rate of 20°C per minute and held at this level until the last compound (octa-group) has eluted from the column.

## TABLE 8

### PCDD and PCDF Congeners Present in the GC Performance Evaluation Solution and Used for Defining the Homologous GC Retention Time Windows on a 60-M DB-5 Column[(b)]

| # of Chlorine Atoms | PCDD Positional Isomer | | PCDF Positional Isomer | |
|---|---|---|---|---|
| | Early Eluter | Late Eluter | Early Eluter | Late Eluter |
| 4[(a)] | 1,3,6,8 | 1,2,8,9 | 1,3,6,8 | 1,2,8,9 |
| 5 | 1,2,4,6,8/1,2,4,7,9 | 1,2,3,8,9 | 1,3,4,6,8 | 1,2,3,8,9 |
| 6 | 1,2,3,4,6,8 | 1,2,3,4,6,7 | 1,2,3,4,6,8 | 1,2,3,4,8,9 |
| 7 | 1,2,3,4,6,7,8 | 1,2,3,4,6,7,9 | 1,2,3,4,6,7,8 | 1,2,3,4,6,7,9 |
| 8 | 1,2,3,4,6,7,8,9 | | 1,2,3,4,6,7,8,9 | |

(a) In addition to these two PCDD isomers, the 1,2,3,4-, 1,2,3,7-, 1,2,3,8-, 2,3,7,8-, $^{13}C_{12}$-2,3,7,8-, and 1,2,3,9-TCDD isomers must also be present.

(b) The PCDF Congeners present in GC the Performance Evaluation Solution for the 30 m DB-225 column include:

- 1,2,3,9-TCDF
- 2,3,7,8-TCDF
- 2,3,4,7-TCDF
- $^{13}C_{12}$-2,3,7,8-TCDF

Column performance criteria is met when the percent valleys between the 2,3,7,8-TCDF analyte and the closest eluting isomers are $\leq$ 25%.

## TABLE 9

### Theoretical Ion Abundance Ratios and Their Control Limits for PCDDs and PCDFs

| # of Chlorine Atoms | Ion Type | Theoretical Ratio | Control Limits | |
|---|---|---|---|---|
| | | | Lower | Upper |
| 4 | M / M+2 | 0.77 | 0.65 | 0.89 |
| 5 | M+2 / M+4 | 1.55 | 1.32 | 1.78 |
| 6 | M+2 / M+4 | 1.24 | 1.05 | 1.43 |
| 6[a] | M / M+2 | 0.51 | 0.43 | 0.59 |
| 7[b] | M / M+2 | 0.44 | 0.37 | 0.51 |
| 7 | M+2 / M+4 | 1.04 | 0.88 | 1.20 |
| 8 | M+2 / M+4 | 0.89 | 0.76 | 1.02 |

[a] Used only for $^{13}$C-HxCDF (IS) [b] Used only for $^{13}$C-HpCDF (IS)

## TABLE 10

### 2,3,7,8-TCDD Equivalent Factors (TEFs) for the Polychlorinated Dibenzodioxins and Dibenzofurans

| Number | Compound(s) | TEF |
|---|---|---|
| 1 | 2,3,7,8-TCDD | 1.00 |
| 2 | 1,2,3,7,8-PeCdd | 0.50 |
| 3 | 1,2,3,6,7,8-HxCDD | 0.10 |
| 4 | 1,2,3,7,8,9-HxCDD | 0.10 |
| 5 | 1,2,3,4,7,8-HxCDD | 0.10 |
| 6 | 1,2,3,4,6,7,8-HpCDD | 0.01 |
| 7 | OCDD | 0.001 |
| 8 | 2,3,6,7-TCDF | 0.1 |
| 9 | 1,2,3,7,8-PeCDF | 0.05 |
| 10 | 2,3,4,7,8PeCDF | 0.5 |
| 11 | 1,2,3,6,7,8-HxCDF | 0.1 |
| 12 | 1,2,3,7,8,9-HxCDF | 0.1 |
| 13 | 1,2,3,4,7,8-HxCDF | 0.1 |
| 14 | 2,3,4,6,7,8-HxCDF | 0.1 |
| 15 | 1,2,3,4,6,7,8-HpCDF | 0.01 |
| 16 | 1,2,3,4,7,8,9-HpCDF | 0.01 |
| 17 | OCDF | 0.001 |

**TABLE 11**

**Toxicity Equivalency Factor:**
**Analyte Relative Retention Time Reference Attributes**

| Analyte | Analyte RRT Reference (a) |
|---|---|
| 1,2,3,4,7,8-HxCDD | $^{13}C_{12}$-1,2,3,6,7,8-HxCDD |
| 1,2,3,6,7,8-HxCDF | $^{13}C_{12}$-1,2,3,4,7,8-HxCDF |
| 1,2,3,7,8,9-HxCDF | $^{13}C_{12}$-1,2,3,4,7,8-HxCDF |
| 2,3,4,6,7,8-HxCDF | $^{13}C_{12}$-1,2,3,4,7,8-HxCDF |

(a) The retention time of 2,3,4,7,8-PeCDF on the DB-5 column is measured relative to $^{13}C_{12}$-1,3,7,8-PeCDF and the retention time of 1,2,3,4,7,8,9-HpCDF relative to $^{13}C_{12}$-1,2,3,4,6,7,8-HpCDF

**FIGURE 1**
Structure of Dibenzodioxin and Dibenzofuran

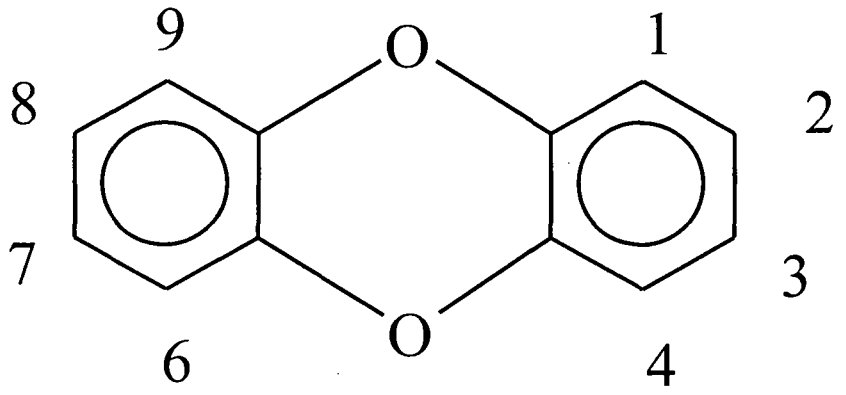


Dibenzodioxin

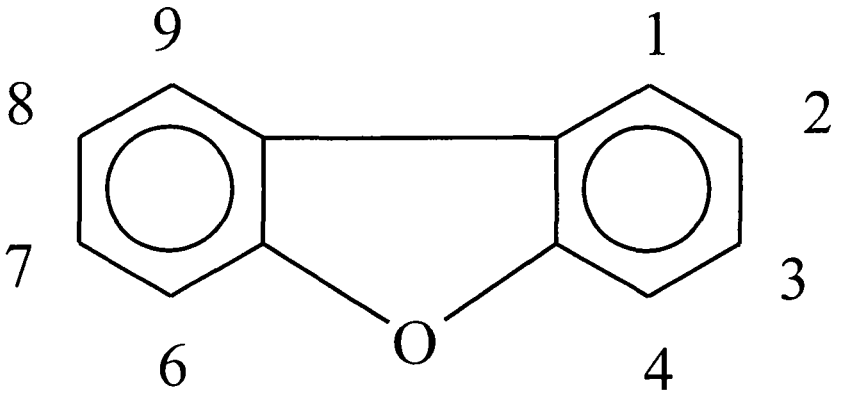


Dibenzofuran

**Company Confidential & Proprietary**

**FIGURE 2**

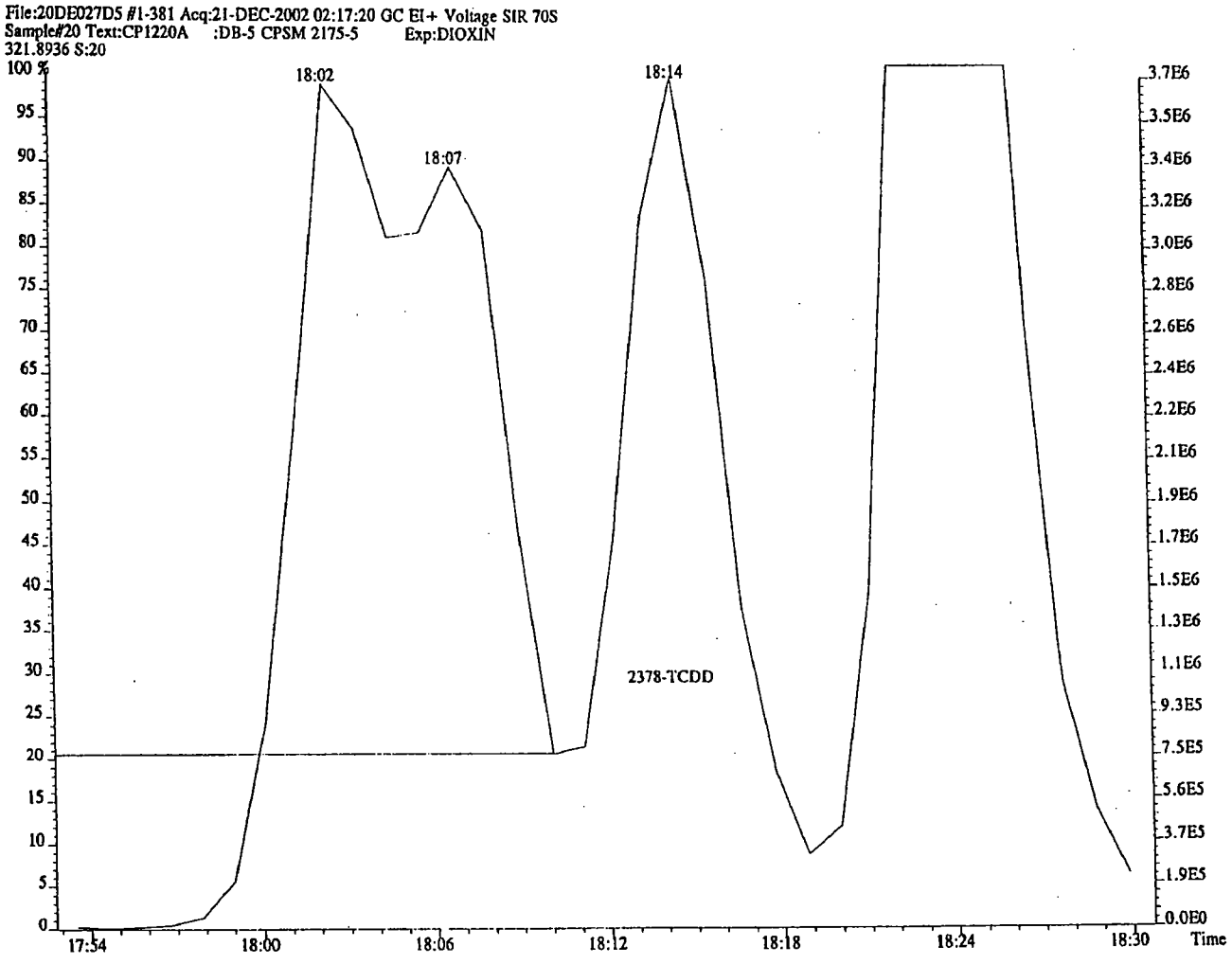


Company Confidential & Proprietary

***Figure 3***

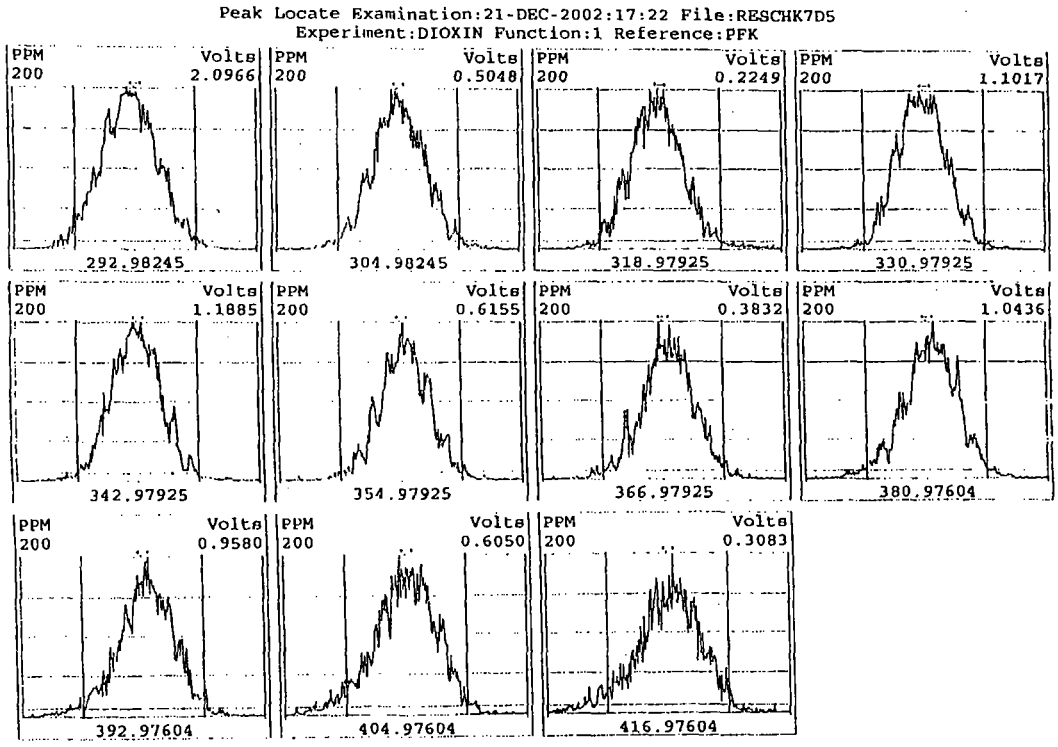
Peak Locate Examination:21-DEC-2002:17:22 File:RESCHK7D5
Experiment:DIOXIN Function:1 Reference:PFK
PPM 200 Volts 2.0966
292.98245
PPM 200 Volts 0.5048
304.98245
PPM 200 Volts 0.2249
318.97925
PPM 200 Volts 1.1017
330.97925
PPM 200 Volts 1.1885
342.97925
PPM 200 Volts 0.6155
354.97925
PPM 200 Volts 0.3832
366.97925
PPM 200 Volts 1.0436
380.97604
PPM 200 Volts 0.9580
392.97604
PPM 200 Volts 0.6050
404.97604
PPM 200 Volts 0.3083
416.97604

**FIGURE 4**

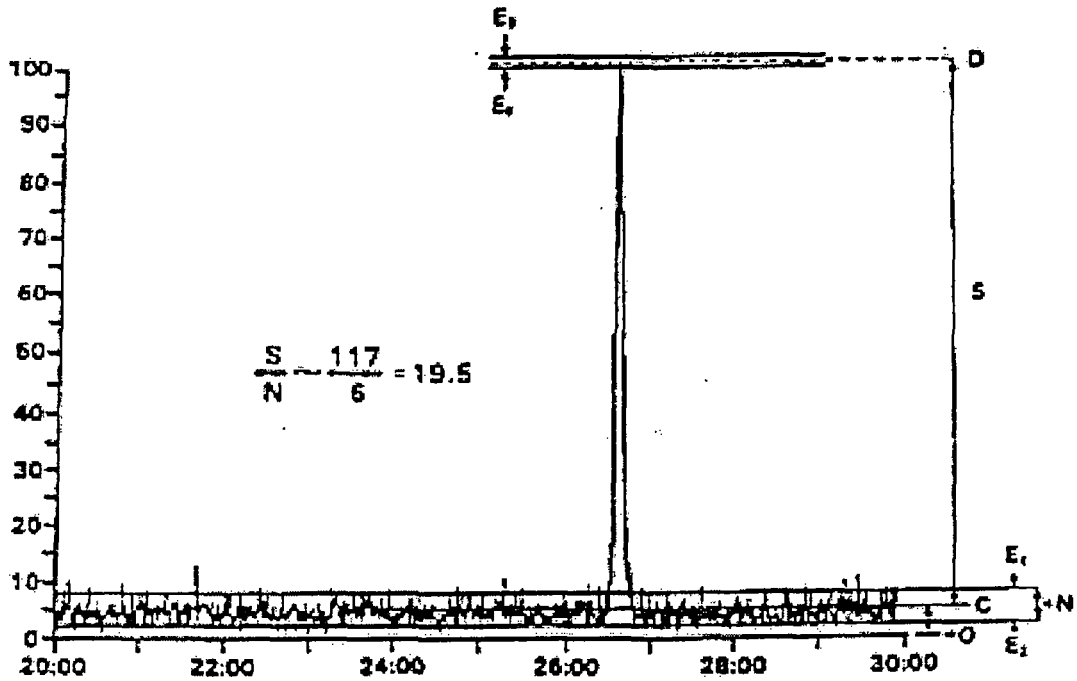


Manual determination of S/N.

The peak height (S) is measured between the mean noise (lines C and D). These mean signal values are obtained by tracing the line between the baseline average noise extremes, E1 and E2, and between the apex average noise extremes, E3 and E4, at the apex of the signal.

NOTE: It is imperative that the instrument interface amplifier electronic zero offset be set high enough so that negative going baseline noise is recorded.



Company Confidential & Proprietary

## APPENDIX A

This procedure is designed for the periodic evaluation of potential contamination by 2,3,7,8-substituted PCDD/PCDF congeners of the working areas inside the laboratory.

### PERFORMING WIPE TEST

Perform the wipe tests on surface areas of two inches by one foot with laboratory wipers saturated with distilled-in-glass acetone or appropriate solvent using a pair of clean stainless steel forceps. Use one wiper for each of the designated areas. Combine the wipers to one composite sample in an extraction jar containing 200 mL distilled-in-glass hexane. Place an equal number of unused wipers in 200 mL hexane and use this as a control.

### SAMPLE PREPARATION

Close the jar containing the wipes and 200 mL hexane and extract for 20 minutes using a wrist-action shaker. Use an appropriate means to reduce the volume to approximately 1.0 mL. Put through an alumina column to clean up potential interfering compounds. Add appropriate amount of recovery standard.

### EXTRACT ANALYSIS

Concentrate the contents of the vial to a final volume of 20 μL (either in a minivial or in a capillary tube). Inject 2 μL of each extract (wipe and control) onto a capillary column and analyze for 2,3,7,8-substituted PCDDs/PCDFs as specified in the analytical method Section 11 (this exhibit). Perform calculations according to Section 12 (this exhibit).

### REPORTING FORMAT

Report the presence of 2,3,7,8-substituted PCDDs and PCDFs as a quantity (pg or ng) per wipe test experiment (WTE). Under the conditions outlined in this analytical protocol, a lower limit of calibration of 25 pg/WTE is expected for 2,3,7,8-TCDD. A positive response for the blank (control) is defined as a signal in the TCDD retention time window at any of the masses monitored which is equivalent to or above 8 pg of 2,3,7,8-TCDD per WTE. For other congeners, use the multiplication factors listed in Table 1, footnote (a) (e.g., for OCDD, the lower MCL is 25 x 5 = 125 pg/WTE and the positive response for the blank would be 8 x 5 = 40 pg). Also, report the recoveries of the internal standards during the simplified cleanup procedure.

### FREQUENCY OF WIPE TESTS

Wipe tests should be performed when there is evidence of contamination in the method blanks.

### CORRECTIVE ACTION

An upper limit of 25 pg per TCDD isomer and per wipe test experiment is allowed. (Use multiplication factors listed in footnote (a) from Table 1 for other congeners.) This value corresponds to the lower calibration limit of the analytical method. Steps to correct the contamination must be taken whenever these levels are exceeded. To that effect, first vacuum the working places (hoods, benches, sink) using a vacuum cleaner equipped with a high-efficiency particulate absorbent (HEPA) filter and then wash with a detergent. A new set of wipes should be analyzed before anyone is allowed to work in the dioxin area of the laboratory.

The test results and the decontamination procedure must be reviewed with EH&S.

# Title: Preparation of Samples for Analysis of Polychlorinated Dioxins and Furans for Analysis HRGC/HRMS

## [Methods 8290, 8290A & TO-9A]

**Approvals (Signature/Date):**

| | | | |
|---|---|---|---|
| Kevin Sanchez<br>Technical Manager | 10-1-08<br>Date | Joe Schairer<br>Health & Safety Manager / Coordinator | 9/10/1/08<br>Date |
| Pamela Schimmer<br>Quality Assurance Manager | 9/29/08<br>Date | Karla Buechler<br>Laboratory Director | 10/2/08<br>Date |

**Copyright Information:**
This documentation has been prepared by TestAmerica Laboratories, Inc. and its affiliates ("TestAmerica"), solely for their own use and the use of their customers in evaluating their qualifications and capabilities in connection with a particular project. The user of this document agrees by its acceptance to return it to TestAmerica upon request and not to reproduce, copy, lend, or otherwise disclose its contents, directly or indirectly, and not to use if for any other purpose other than that for which it was specifically provided. The user also agrees that where consultants or other outside parties are involved in the evaluation process, access to these documents shall not be given to said parties unless those parties also specifically agree to these conditions.

**THIS DOCUMENT CONTAINS VALUABLE CONFIDENTIAL AND PROPRIETARY INFORMATION. DISCLOSURE, USE OR REPRODUCTION OF THESE MATERIALS WITHOUT THE WRITTEN AUTHORIZATION OF TESTAMERICA IS STRICTLY PROHIBITED. THIS UNPUBLISHED WORK BY TESTAMERICA IS PROTECTED BY STATE AND FEDERAL LAW OF THE UNITED STATES. IF PUBLICATION OF THIS WORK SHOULD OCCUR THE FOLLOWING NOTICE SHALL APPLY:**

**©COPYRIGHT 2008 TESTAMERICA LABORATORIES, INC. ALL RIGHTS RESERVED.**

**Facility Distribution No.** Uncontrolled **Distributed To:** TestAmerica West Sacramento Bids Folder

## 1. SCOPE AND APPLICATION

1.1. This method provides procedures for the preparation of samples prior to the analysis of 2,3,7,8-tetrachlorodibenzo-p-dioxin (2,3,7,8-TCDD), polychlorinated dibenzo-p-dioxins (tetra- through octachlorinated homologs; PCDDs), and polychlorinated dibenzofurans (tetra- through octachlorinated homologs; PCDFs) in a variety of environmental matrices at part-per-trillion (ppt) concentrations by SW 846 Method 8290. The analytical method calls for the use of high-resolution gas chromatography and high-resolution mass spectrometry (HRGC/HRMS) on purified sample extracts. Refer to Table 1 for the list of analytes. Analysis is by SOP WS-ID-0005.

1.2. The sensitivity of this method is dependent upon the level of interferences within a given matrix.

1.3. This method is designed for use by analysts who are experienced with residue analysis.

1.4. Samples containing concentrations of specific congeners (PCDDs and PCDFs) that are greater than the calibration limit should be analyzed by a protocol designed for such concentrations, such as 8280A/B.

## 2. SUMMARY OF METHOD

2.1. This procedure uses matrix-specific extraction and analyte-specific cleanup techniques.

2.2. A specified amount (see Table 1) of soil, sediment, fly ash, water, sludge (including paper pulp), still-bottom, fuel oil, chemical reactor residue, air sample (QFF, PUF or XAD media) or fish tissue, is spiked with a solution containing specified amounts of each of nine isotopically ($^{13}C$) labeled PCDDs/PCDFs listed in Table 2. The sample is then extracted according to a matrix-specified extraction procedure. The extraction procedures are: a) toluene Soxhlet (or equivalent) extraction, for soil, sediment, fly ash samples, aqueous sludges, and solid air matrices (XAD, QFF, PUF); b) methylene chloride liquid-liquid extraction for water samples; c) dilution of a small sample aliquot in solvent for wastes/chemical products; and d) toluene (or hexane/methylene chloride) Soxhlet (or equivalent) extraction for fish tissue.

2.3. If interferences are present, extracts may be cleaned as described below. The extracts are submitted to an acid and/or base washing treatment and dried. Following a solvent exchange step, the residue is cleaned up by column chromatography on acid/base silica, acid alumina and carbon on silica. The preparation of the final extract for HRGC/HRMS analysis is accomplished by adding 20 μL of a tetradecane solution containing 100 pg/μL of each of the two recovery standards $^{13}C$-1,2,3,4-TCDD and $^{13}C$-1,2,3,7,8,9-HxCDD (Table 2) to the concentrated eluate. The former is used to determine the percent recoveries of tetra- and penta-chlorinated PCDD/PCDF internal standards while the latter is used for the determination of hexa-, hepta- and octa-

chlorinated PCDD/PCDF internal standard percent recoveries. Upon client approval, less final volume can be used to decrease detection limit and more final volume can be used to decrease severe interferences.

## 3. DEFINITIONS

3.1. Definitions of terms used in this SOP may be found in the glossary of the Quality Assurance Manual (QAM).

3.2. Data qualifiers are defined on each data report. Commonly used data qualifiers are defined in the QAM.

3.3. Internal Standard: An internal standard is a $^{13}C$-labeled analog of a congener chosen from the compounds listed in Table 2. Internal standards are added to all samples including method blanks and quality control samples before extraction, and they are used to quantitate the concentration of the analytes. Nine internal standards are used in this method. There is one for each of the dioxin and furan homologs (except for OCDF) with the degree of chlorination ranging from four to eight. Additional internal standards may be added to act as retention time references, but they are not used for quantitation.

3.4. Recovery Standard: Two recovery standards are used to determine the percent recoveries for the internal standards. The $^{13}C$-1,2,3,4-TCDD is used to measure the percent recoveries of the tetra- and pentachlorinated internal standards while $^{13}C$-1,2,3,7,8,9-HxCDD is used to determine the recovery of the hexa-hepta- and octachlorinated internal standards. $^{13}C$-1,2,3,7,8,9-HxCDD also acts as a retention time reference for the unlabeled analog present in sample extracts. They are added to the final sample extract before HRGC/HRMS instrument analysis.

3.5. Cleanup Recovery Standard (CRS): A $^{37}Cl_4$-2,3,7,8-TCDD analog that is added to each sample following extraction to measure the efficiency of the cleanup process.

## 4. INTERFERENCES

4.1. Solvents, reagents, glassware and other sample processing hardware may yield discrete artifacts or elevated baselines that may cause misinterpretation of the chromatographic data. All of these materials must be demonstrated to be free from interferents under the conditions of analysis by running laboratory method blanks. Analysts shall not use PVC gloves.

4.2. The use of high-purity reagents and solvents helps minimize interference problems. Purification of solvents by distillation in all-glass systems may be necessary.

4.3. Re-use of glassware is to be minimized to avoid the risk of contamination.

4.4. Interferences co-extracted from samples will vary considerably from source to source, depending on the diversity of the site being sampled. Interfering compounds may be present at concentrations several orders of magnitude higher than the PCDDs and PCDFs. The most frequently encountered interferences are chlorinated-biphenyls, methoxy biphenyls, hydroxy biphenyl ethers, benzyl phenyl ethers, polynuclear aromatics, and pesticides. Because very low levels of PCDDs and PCDFs are measured by this method, the elimination of interferences is essential. The cleanup steps given in Sections 11.11 thru 11.15 can be used to reduce or eliminate these interferences.

4.4.1. If South Carolina samples show diphenyl ethers at levels that could contribute to positive furan hits, a subsequent clean-up to remove them must be performed.

## 5. SAFETY

Employees must abide by the policies and procedures in the Corporate Environmental Health and Safety Manual (CW-E-M-001), the West Sacramento Addendum to the Corporate EH&S Manual (WS-PEHS-002) and this document. This procedure may involve hazardous material, operations and equipment. This SOP does not purport to address all of the safety problems associated with its use. It is the responsibility of the user of the method to follow appropriate safety, waste disposal and health practices under the assumption that all samples and reagents are potentially hazardous. Safety glasses, gloves, lab coats and closed-toes, nonabsorbent shoes are a minimum.

5.1. Specific Safety Concerns or Requirements

5.1.1. Hearing protection must be worn when using mechanical systems to grind fish, tissue, or paper/pulp samples.

5.1.2. Finely divided dry soils contaminated with PCDDs and PCDFs are particularly hazardous because of the potential for inhalation and ingestion. Such samples are to be processed in a confined environment, such as a hood or a glove box.

5.1.3. Assembly and disassembly of glassware creates a risk of breakage and cuts. All staff members shall wear Kevlar or MAPA blue latex cut-resistant gloves over chemically resistant gloves when assembling and disassembling glassware.

5.1.4. Eye protection that satisfies ANSI Z87.1, laboratory coat, and chemically resistant gloves must be worn while samples, standards, solvents, and reagents are being handled. Latex and vinyl gloves provide no protection against most of the organic solvents used in this method. Nitrile or similar gloves must be used. Latex gloves may be used for methanol.

5.1.5. Exposure to chemicals must be maintained as low as reasonably achievable, therefore all samples must be opened, transferred and prepared in a fume hood. Solvent and waste containers will be kept closed unless transfers are being made.

5.1.6. Laboratory procedures such as repetitive use of pipets, repetitive transferring of extracts, and manipulation of filled separatory funnels and other glassware represent a significant potential for repetitive motion or other ergonomic injuries. Laboratory associates performing these procedures are in the best position to realize when they are at risk for these types of injuries. Whenever a situation is found in which an employee is performing the same repetitive motion, the employee shall immediately bring this to the attention of their supervisor, manager, or the EH&S staff. The task will be analyzed to determine a better means of accomplishing it.

5.1.7. The use of separatory funnels to extract aqueous samples with methylene chloride creates excessive pressure very rapidly. The use of separatory funnels during the partition and back extraction of sample extracts can also create excessive pressure. Initial venting should be done immediately after the sample container has been sealed and inverted. Vent the funnel into the hood away from people and other samples. This is considered a high-risk activity, and a face shield must be worn over safety glasses or goggles when it is performed. Alternately, the extraction can be performed behind a closed fume hood sash on a mechanical shaker.

5.1.8. When Dean-Stark/Soxhlet clean-ups or extractions are performed overnight or unattended, special precautions must be taken. Open the chiller valves to the system about 15 minutes before the heating elements are turned on, and check every condenser to ensure that it is cold and functioning properly before turning the heating elements on. Check every condenser again about 15 minutes after turning the heating elements on to ensure that they are still cold and functioning properly. If the system is left operating overnight or unattended for an extended period, the first chemist to come back into the lab must again check every condenser to ensure that it is still cold and functioning properly.

5.2. Primary Materials Used

The following is a list of the materials used in this method, which have a serious or significant hazard rating. **NOTE: This list does not include all materials used in the method. The table contains a summary of the primary hazards listed in the MSDS for each of the materials listed in the table.** A complete list of materials used in the method can be found in the reagents and materials section. Employees must review the information in the MSDS for each material before using it for the first time or when there are major changes to the MSDS.

| Material (1) | Hazards | Exposure Limit (2) | Signs and symptoms of exposure |
|---|---|---|---|
| Acetone | Flammable | 1000 ppm-TWA | Inhalation of vapors irritates the respiratory tract. May cause coughing, dizziness, dullness, and headache. |
| Cyclohexane | Flammable Irritant | 300 ppm TWA | Inhalation of vapors causes irritation to the respiratory tract. Symptoms may include coughing, shortness of breath. High concentrations have a narcotic effect. |
| Hexane | Flammable Irritant | 500 ppm-TWA | Inhalation of vapors irritates the respiratory tract. Overexposure may cause lightheadedness, nausea, headache, and blurred vision. Vapors may cause irritation to the skin and eyes. |
| Isooctane | Flammable Irritant | None established | Inhalation of vapors may cause nausea, headache, dizziness, loss of consciousness, irritation to upper respiratory tract, pain in throat and nose, coughing, wheezing, shortness of breath. |
| Methanol | Flammable Poison Irritant | 200 ppm-TWA | A slight irritant to the mucous membranes. Toxic effects exerted upon nervous system, particularly the optic nerve. Symptoms of overexposure may include headache, drowsiness and dizziness. Methyl alcohol is a defatting agent and may cause skin to become dry and cracked. Skin absorption can occur; symptoms may parallel inhalation exposure. Irritant to the eyes. |
| Methylene Chloride | Carcinogen Irritant | 25 ppm-TWA 125 ppm-STEL | Causes irritation to respiratory tract. Has a strong narcotic effect with symptoms of mental confusion, light-headedness, fatigue, nausea, vomiting and headache. Causes irritation, redness and pain to the skin and eyes. Prolonged contact can cause burns. Liquid degreases the skin. May be absorbed through skin. |
| Potassium Hydroxide | Corrosive Poison | 2 mg/m3 ceiling | Severe irritant. Effects from inhalation of dust or mist vary from mild irritation to serious damage of the upper respiratory tract, depending on the severity of exposure. Symptoms may include coughing, sneezing, damage to the nasal or respiratory tract. High concentrations can cause lung damage. Corrosive! Contact with skin can cause irritation or severe burns and scarring with greater exposures. |
| Sodium Hydroxide | Corrosive Poison | 2 ppm, 5 $mg/m^3$ | This material will cause burns if comes into contact with the skin or eyes. Inhalation of Sodium Hydroxide dust will cause irritation of the nasal and respiratory system. |
| Sulfuric Acid (1) | Corrosive Oxidizer Dehydra-dator | 1 $mg/m^3$ | This material will cause burns if comes into contact with the skin or eyes. Inhalation of vapors will cause irritation of the nasal and respiratory system. |
| Tetradecane | Irritant | None established | Inhalation of vapors may cause difficulty breathing, headache, intoxication and central nervous system damage. |
| Toluene | Flammable Poison Irritant | 200 ppm-TWA 300 ppm-Ceiling | Inhalation may cause irritation of the upper respiratory tract. Symptoms of overexposure may include fatigue, confusion, headache, dizziness and drowsiness. Peculiar skin sensations (e. g. pins and needles) or numbness may be produced. Causes severe eye and skin irritation with redness and pain. May be absorbed through the skin. |
| 1 – Always add acid to water to prevent violent reactions. | | | |
| 2 – Exposure limit refers to the OSHA regulatory exposure limit. | | | |

## 6. EQUIPMENT AND SUPPLIES

The following list of items does not necessarily constitute an exhaustive compendium of the equipment needed for this analytical method.

6.1. Nitrogen evaporation apparatus with variable flow rate.

6.2. Balances capable of accurately weighing to 0.01 g and 0.0001 g.

6.3. Centrifuge.

6.4. Water bath, equipped with concentric ring covers and capable of maintaining temperature control within ± 2°C.

6.5. Stainless steel or glass containers large enough to hold contents of one-pint sample containers.

6.6. Drying oven.

6.7. Stainless steel spoons and spatulas.

6.8. Pipettes, disposable, Pasteur, 150 mm long x 5 mm ID.

6.9. Pipettes, disposable, serological, 10 mL, for the preparation of the carbon column specified in Section 7.1.

6.10. Reacti-vial, 2 mL, silanized clear glass.

6.11. Stainless steel meat grinder with a 3- to 5-mm hole size inner plate.

6.12. Separatory funnels, 250 mL.

6.13. Separatory funnels, 1000 mL.

6.14. Teflon® boiling chips (or equivalent) washed with methlyene chloride before use.

6.15. Chromatographic column, glass, 300 mm x 10.5 mm, fitted with Teflon® stopcock.

6.16. Adapters for concentrator tubes.

6.17. Glass fiber filters.

6.18. Dean-Stark trap, 5 or 10 mL, with T-joints, condenser and 125 mL flask.

6.19. Continuous liquid-liquid extractor.

6.20. All-glass Soxhlet apparatus, 500 mL flask.

6.21. Soxtherm extraction apparatus (or equivalent), including glass thimble holders, glass beakers, and gaskets.

6.22. Glass funnels, sized to hold 170 mL of liquid.

6.23. Desiccator.

6.24. Turbo evaporator

6.25. Rotary evaporator with a temperature controlled water bath.

6.26. High speed tissue homogenizer, equipped with an EN-8 probe or equivalent.

6.27. Glass wool, extracted with methylene chloride, dried and stored in a clean glass jar.

*Note: Re-use of glassware should be minimized to avoid the risk of contamination. All glassware that is re-used must be scrupulously cleaned as soon as possible after use, applying the following procedure:*

6.28. Proper cleaning of glassware is extremely important because glassware may not only contaminate the samples, but may also remove the analytes of interest by adsorption on the glassware surface.

6.28.1. Glassware should be rinsed with solvent and washed with a detergent solution as soon after use as is practical. Sonication of glassware containing a detergent solution for approximately 30 seconds may aid in cleaning. Glassware with removable parts, particularly separatory funnels with Teflon stopcocks, must be disassembled prior to detergent washing.

6.28.2. After detergent washing, glassware should be immediately rinsed with acetone, toluene, hexane, and then methylene chloride.

6.28.3. Do not kiln reusable glassware in an oven as a routine part of cleaning. Kilning may be warranted after particularly dirty samples are encountered, but should be minimized, as repeated kilning of glassware may cause the formation of active sites on the glass surface that will irreversibly adsorb PCDDs/ PCDFs.

6.28.4. Immediately prior to use, Soxhlet (or equivalent) extraction glassware should be pre-extracted with toluene for a minimum of 3 hours. Note: Accelerated extractors such as the Soxtherm can use a shorter cleaning cycle which exhibits subsequent extractions free of cross contamination and interferences.

# 7. REAGENTS AND STANDARDS

## 7.1. Column Chromatography Reagents

7.1.1. Silica Gel - Kieselgel 60 or equivalent, activate for 1 hour at 184°C before use. Store at 130°C in covered flask.

7.1.2. Acid Alumina - ICN or equivalent, activated as necessary.

7.1.3. Basic Alumina - ICN or equivalent. No activation required.

7.1.4. Granular carbon/silica gel - Mix 3.6 g granular carbon and 16.4 g activated silica gel; (alternatively, prepare carbon/silica gel (5%/95%); i.e., combine 5 g precleaned carbon with 95 g silica gel). Store at room temperature in a Teflon ® lined covered jar. The first LCS prepared with a new batch of column packing material is the quality control check of the packing materials. Refer to historical control limits before accepting the new batch of material.

7.1.5. 44% $H_2SO_4$ /silica gel - Mix 24 mL conc. $H_2SO_4$ and 56 g activated silica gel. Stir and shake until free flowing. Store at room temperature.

7.1.6. 33% NaOH/silica gel - Mix 34 mL 1N NaOH and 67 g activated silica gel. Stir and shake until free flowing. Store at room temperature.

## 7.2. Acid Alumina Activity Assessment

Alumina activity may vary with the matrix or environmental conditions. Monitor internal standard and cleanup recovery standard recoveries in extract analysis. Low recoveries of cleanup recovery standard (CRS) may indicate loss of alumina activity. Assess stability of alumina activity and apply corrective action as appropriate (reactivate and reprofile).

Note: a column profile should be done to show elution of all 2,3,7,8 substituted analogs so problems can be readily identified.

7.2.1. Profile each vendor lot of activated alumina as corrective action for low internal standard and CRS recoveries dictate. If necessary, proceed as follows:

7.2.1.1. Set up and label 3 acid alumina columns.

7.2.1.2. Pre-rinse with 20 mL hexane.

7.2.1.3. Add 2 mL hexane spiked with internal standards and natives (spike amounts equivalent to those for LCS) with 2X2 mL hexane rinse of fractions.

7.2.1.4. Elute each column with 20 mL hexane. Collect and label these fractions.

7.2.1.5. Elute each column with 5 x10 mL methylene chloride/hexane at the appropriate v/v percent. Collect and label these fractions separately.

7.2.1.6. Elute each column with 10 mL of 100% methylene chloride. Collect and label these fractions. Reduce all fractions to final volume and add recovery standard.

7.2.2. Review data and select an elution scheme. Group the fraction from each solvent system as follows:

7.2.2.1. Pre-analyte fraction - consists of all eluent prior to elution of first target analytes.

7.2.2.2. Analyte fraction - consists of all that contain detectable levels of target analytes.

7.2.2.3. Post-analyte fraction - consists of all eluents after elution of the last target analyte.

7.2.3. Select the solvent system which best meets the following two conditions:

7.2.3.1. Pre-analyte fraction consists of 20mL hexane and no more than 20 mL mixed solvent.

7.2.3.2. Analyte fraction consists of no more than 20mL of mixed solvent and contains greater than 90% of all target analytes and greater than 80% of all internal standards.

7.2.4. After selection of the appropriate solvent system and fractionation pattern, perform triplicate acid alumina cleanups on spiked hexane to ensure reproducibility of the fractionation pattern. Document each elution scheme.

7.2.5. Each subsequent batch of acid alumina used in the lab (from the same vendor lot) must be checked for stable activity.

7.3. Reagents

7.3.1. Sulfuric acid, concentrated, ACS grade, specific gravity 1.84.

7.3.2. Potassium hydroxide, ACS grade, 20 percent (w/v) in distilled water.

7.3.3. Distilled water demonstrated to be free of interferents

7.3.4. Potassium carbonate, anhydrous, analytical reagent.

7.3.5. Silica gel.

7.3.6. Solution for breaking emulsions: Slowly add 1.0L of reagent grade NaOH solution to a 2.0L NaOH container, containing 1.0L of DI H2O, and leave the container in secondary containment with the lid off.

**Warning: The solution will begin to heat so let the solution stand until equilibrium is met and the solution is at room temperature.**

When this process is complete, the solution will then be ready for use in the samples.

7.3.7. Precleaned Sodium Sulfate.

7.3.8. Canola Oil (for tissue extraction only), or other suitable oil.

7.4. Desiccating Agent

7.4.1. Sodium sulfate, granular, anhydrous.

7.5. Solvents

7.5.1. High-purity, distilled-in-glass or highest available purity: Methylene chloride, hexane, methanol, tetradecane, isooctane, toluene, cyclohexane, and acetone.

7.6. All daily internal standard, daily clean up recovery standards, and daily spiking solutions are stable for one year from preparation. After 1 year, solutions may be re-verified. The re-verified solution may be used for an additional year, or until there is evidence of compound degradation or concentration. The re-verification must be performed using an unexpired, not previously re-verified solution from a second lot or second vendor.

7.6.1. Sealed ampules may be used until the manufacturer's expiration date is exceeded. If no expiration date is provided, then the expiration date will be 10 years from the date the ampule is opened. The solvent level should be monitored prior to each use to assure there has been no concentration of the standard over time.

7.6.2. Standards for method 8290A require storage at ≤6°C.

7.7. Field Surrogate Solution (air matrices)

This solution contains one $^{37}Cl$ labeled analog (for Method TO-9/TO-9A) or one $^{37}Cl$ and four $^{13}C$ labeled analogs (for Method 0023) at the nominal concentration indicated in Table 2. It is used to assess sample collection and recovery procedures.

7.8. Internal Standard

This isooctane (or toluene) solution contains the nine internal standards at the nominal concentrations that are listed in Table 2. The solution contains at least one carbon-labeled standard for each homologous series, and it is used to measure the concentrations of the native substances. (Note that $^{13}C$ -OCDF is not present in the solution.)

7.9. Native Spike Standard

Also known as the Matrix Spike or Native Spike solution. Contains all the 2,3,7,8-substituted unlabeled analytes listed in Table 2. Prepare using the appropriate standards to yield a spiking solution with a concentration of 4.0 ng/ml for the tetra-CDDs/CDFs, 20 ng/ml for the penta-, hexa-, and hepta- CDDs/CDFs, and 40 ng/ml for the octa- CDD/CDF.

7.10. Recovery Standard Solution

This tetradecane solution contains two recovery standards ($^{13}C$ -1,2,3,4-TCDD and $^{13}C$ -1,2,3,7,8,HxCDD). An appropriate volume of this solution is spiked into each sample extract before the final concentration step.

7.11. Cleanup Recovery Standard Solution (CRS)

Prepare $^{37}Cl_4$-2,3,7,8-TCDD at the concentration shown in Table 2, in isooctane (or toluene).

7.12. Preparation and QC of PUF material

7.12.1. The PUF material is purchased pre-cut.

7.12.2. The PUFs are rinsed by Soxhlet with acetone (or other appropriate solvent) for a minimum of 16 hours and air dried for a minimum of 2 hours in a contaminant-free area.

7.12.3. One PUF from the rinsed batch is randomly selected to be the QC sample for the batch.

7.12.4. The PUF is loaded into a pre-cleaned Soxhlet extractor charged with toluene.

7.12.5. The 1613/8290 daily internal standard solution is spiked into the PUF and it is extracted for a minimum of 16 hours.

7.12.6. The Soxhlet extract is recovered and processed according to Section 11.4.

7.12.7. The batch of PUF is considered acceptable if no target analytes are detected at or above the laboratory or project specific reporting limit.

## 8. SAMPLE COLLECTION, PRESERVATION AND STORAGE

8.1. The sample collection, shipping, handling, and chain-of-custody procedures are not described in this document. Sample collection personnel will, to the extent possible, homogenize samples in the field before filling the sample containers. This should minimize or eliminate the necessity for sample homogenization in the laboratory. The analyst should make a judgment, based on the appearance of the sample, regarding the necessity for additional mixing. If the sample is clearly non-homogeneous, the entire contents should be transferred to a glass or stainless steel pan for mixing with a stainless steel spoon or spatula before removal of a sample portion for analysis.

8.2. Grab and composite samples must be collected in glass containers.

8.3. Ambient air samples are collected on a Quartz Fiber Filter followed by a glass sleeve containing a polyurethane foam plug.

8.4. Samples from stationary sources are collected on glass or quartz fiber filters and XAD-2 Resin. (See SAC-ID-0009 for sample preparation procedures).

8.5. Conventional sampling practices must be followed. Do not rinse the bottle with sample before collection. Sampling equipment must be free of potential sources of contamination.

8.6. Grinding or blending of fish samples.

If not otherwise specified by the client, the whole fish (frozen) should be blended or ground to provide a homogeneous sample. The use of a stainless steel meat grinder with a 3 to 5 mm hole size inner plate is recommended. In some circumstances, analysis of fillet or specific organs of fish may be requested by the client. If so requested by the client, the above whole fish requirement is superseded.

**Warning: Hearing protection must be worn when grinding samples.**

8.7. With the exception of the fish tissues, which must be stored at - 20°C, all samples should be stored at 4°C ± 2, extracted within 30 days and completely analyzed within 45 days of collection. The 30 day hold time is recommended. PCDDs and PCDFs have demonstrated stability for greater than one year.

8.8. All extracts must be stored capped, in the dark, at room temperature (approximately 21°C to 28°C). All extracts for method 8290A must be stored capped at ≤6°C.

8.9. For moisture determinations refer to SOP WS-OP-0013.

## 9. QUALITY CONTROL

9.1. One method blank (MB) must be extracted with every process batch of similar matrix, not to exceed twenty (20) samples. The method blank is an aliquot of laboratory

matrix (reagent water, sodium sulfate, PUF, XAD, filter, etc.) processed in the same manner and at the same time as the associated samples. Corrective actions must be documented on a Non-Conformance memo, then implemented when target analytes are detected in the method blank above the reporting limit or when surrogate recoveries are outside control limits. Re-extraction of the blank, other batch QC, and the affected samples are required when the method blank is deemed unacceptable. The method blank contains a PUF plug, XAD, or filter prepared from the same batch as the field samples whenever possible for air samples.

Certain programs, such as DOD, may require a more stringent evaluation of the method blank, for instance, that the blank not contain any analytes of interest at a concentration greater than ½ the lower calibration limit.

Note: Re-extraction of the blank, QC and affected samples for the air matrices (PUF, XAD, and filter) is not generally possible because the entire sample is consumed in the initial extraction.

9.1.1. If the accompanying samples are aqueous, use distilled water as a matrix. Take the method blank through all steps detailed in the analytical procedure.

9.1.2. Use sodium sulfate as the method laboratory matrix when solids are extracted. Use a mixture of sodium sulfate and canola oil as the matrix when tissues are extracted. Take the method blank through all steps detailed in the analytical procedure.

9.1.3. The method blank must be spiked prior to extraction with the same amount of $^{13}C$ -labeled internal standards as added to samples.

9.1.4. If method blank contamination is present, check solvents, reagents, fortification solutions, apparatus and glassware to locate and eliminate the source of contamination before any further samples are extracted and analyzed.

9.1.4.1. OCDD is a ubiquitous laboratory contaminant. A method blank and the associated samples are deemed acceptable if the OCDD concentration is <5x the specified reporting limit. Flag data appropriately. The analyst is expected to investigate and eliminate potential sources of systematic contamination.

9.1.4.2. If a target analyte is detected in the blank but the associated samples are ND (not detected), then the data may be reported, unless otherwise directed by the client. Note the action in the narrative.

9.1.4.3. If a target analyte is detected in the blank, but the concentration of the contaminant in the samples >10x the blank concentration,

then the data may be reported, unless otherwise directed by the client. Note the action in the narrative.

9.1.5. If new batches of reagents or solvents contain interfering contaminants, purify or discard them.

9.2. A Laboratory Control Sample (LCS) must be extracted with every process batch of similar matrix, not to exceed twenty (20) samples. The LCS is an aliquot of laboratory matrix (e.g. water, sodium sulfate, PUF, XAD, etc.) spiked with analytes of known identity and concentration. The LCS must be processed in the same manner and at the same time as the associated samples. Corrective actions must be documented on a Non-Conformance memo, then implemented when recoveries of any spiked analyte is outside control limits provided on the LIMS or by the client. Re-extraction of the blank, other batch QC and all associated samples are required if the LCS is deemed unacceptable. See policy WS-PQA-003 for specific acceptance criteria. When associated with PUF samples, the LCS should contain a PUF plug prepared from the same batch as the field samples whenever possible.

Note: Re-extraction of the blank, QC and affected samples for the air matrices (PUF, XAD, and filter) is not generally possible because the entire sample is consumed in the initial extraction.

9.2.1. A LCS is deemed acceptable if control analytes are above control limits and the associated samples are ND, unless otherwise specified by the client. Note any actions in the narrative.

9.3. The assessment of matrix effects on method performance, as required by NELAP, is met in Method 8290 and 8290A, as in all isotope dilution techniques, with the use of isotopically labeled compounds. These isotopically labeled compounds are analogs of target analytes and are spiked into each sample. Therefore, matrix effects on method performance may be judged by the recovery of these analogs. Sample analysis acceptance is controlled by the performance of these analogs in each sample. A Matrix Spike/Matrix Spike Duplicate (MS/MSD or MS/SD) pair are extracted at the client's request only. Method 8290A does not address analysis of MS/MSD. An exception to this rule is a batch containing South Carolina samples for Method 8290. These batches must have an MS/MSD prepared. However, South Carolina requires Method 8290A after December 31, 2008. An MS/MSD pair are aliquots of a selected field sample spiked with analytes of known identity and concentration. When requested by the client, the MS/MSD pair shall be processed in the same manner and at the same time as the associated samples. Corrective actions must be documented on a Non-Conformance memo, then implemented when recoveries of any spike analyte is outside control limits provided on the LIMS or by the client. Re-extraction of the blank, the LCS, the selected field sample, and the MS/MSD may be required after evaluation and review. Matrix Spike/ Matrix Spike Duplicates are not generally applicable for air

samples due to the difficulty in collecting identical or representative samples. An LCS/LCSD may be extracted to show precision of the extraction and analysis process.

9.3.1. Matrix Spike (MS): A sample, which is spiked with a known amount of the matrix spike fortification solution prior to the extraction step. The recoveries of the matrix spike compounds are determined; they are used to estimate the effect of the sample matrix upon the analytical methodology.

9.3.2. Matrix Spike Duplicate (MSD): A second portion of the same sample as used in the matrix spike analysis and which is treated like the matrix spike sample.

9.3.3. Locate the sample for the MS and MSD analyses (the sample may be labeled "double volume").

9.3.4. Add an appropriate volume of the matrix spike fortification solution, adjusting the fortification level as specified in Table 1, under IS Spiking Levels.

9.3.5. The results obtained from the MS and MSD samples (percent recovery and concentrations of 2,3,7,8-substituted PCDDs/PCDFs) should agree within 20 percent relative difference. Report all results and flag outliers.

9.3.6. Internal standard recoveries are flagged if they are outside the recovery goals. Re-extraction of affected samples should be performed if signal-to-noise for any internal standard is less than 10:1.

9.4. Duplicates

9.4.1. Upon client request, duplicates may be processed. Locate the sample specified for duplicate analysis, and prepare and analyze a second 10-g soil or sediment sample portion or 1 L water sample, or an appropriate amount of the type of matrix under consideration. Duplicate samples are not generally applicable for air samples due to the difficulty in collecting identical or representative samples. A duplicate injection of a sample extract may be performed to display instrument precision.

9.4.1.1. The results of the laboratory duplicates (percent recovery and concentrations of 2,3,7,8-substituted PCDD/PCDF compounds) should agree within 25 percent relative difference. Report all results and flag outliers.

9.4.2. Internal standard recoveries are flagged if they are outside the recovery goals. Re-extraction of affected samples should be performed if signal-to-noise for any internal standard is less than 10:1.

9.5. Field Blanks

9.5.1. Each batch of samples may contain a field blank sample of nominally uncontaminated soil, sediment or water that is to be processed for analysis.

9.5.1.1. Weigh a 10-g portion or use 1 L (for aqueous samples) of the specified field blank sample and add the appropriate amount of internal standard to yield 100 pg/µL in the final extract.

9.5.1.2. Extract by using the procedures described in Section 11. As applicable, add the appropriate amount of recovery standard to yield 100 pg/µL in the final extract. Analyze a 1-2 µL aliquot of the concentrated extract using SOP WS-ID-0005.

9.6. Rinsate Samples

9.6.1. In addition to the field blank, a batch of samples may include a rinsate, which is a portion of the solvent (usually trichloroethylene) that was used to rinse sampling equipment. The rinsate is analyzed to assure that the samples were not contaminated by the sampling equipment.

9.6.2. The rinsate sample must be processed like a regular sample.

Take a 100-mL (± 0.5 mL) portion of the sampling equipment rinse solvent (rinsate sample), filter, if necessary, and add the appropriate amount of internal standard to yield 100 pg/µL in the final extract.

9.6.3. Using appropriate methods, concentrate to approximately 10 mL.

9.6.4. Just before analysis, add the appropriate amount of recovery standard to yield 100 pg/µL in the final extract. Reduce the volume to a final volume of 20 µL, as necessary. No column chromatography is required.

9.6.5. Analyze an aliquot following the same procedures used to analyze samples.

9.7. Surrogate/Clean Up Recovery Standard

A surrogate compound may be spiked into all air media samples prior to collection. For all other matrices, a clean up recovery standard is spiked following extraction and just prior to cleanup, in order to monitor relative loss of internal standard during both extraction and cleanup.

9.8. Internal Standards

An internal standard is a $^{13}C$ -labeled analog of a PCDD/PCDF congener. Internal standards are added to all samples including method blanks and quality control samples before extraction, and they are used to quantitate the concentration of the analytes. Nine internal standards are used in this method. There is one for each of the dioxin and

furan homologs (except for OCDF) with the degree of chlorination ranging from four to eight. Additional internal standards may be added to act as retention time references, but they are not used for quantitation.

9.8.1. A 2000 pg aliquot of the internal standard mixture is added to all samples, regardless of sample size. As an example, for $^{13}C$ -2,3,7,8-TCDD, a 10-g soil sample requires the addition of 2000 pg of $^{13}C$ -2,3,7,8-TCDD to give the requisite fortification level.

9.8.2. Internal standards must be spiked into all samples, QC samples, and included in all calibrations.

9.8.3. For each sample and QC aliquot, calculate the percent recovery. The percent recovery should be between 40 percent and 135 percent for all nine internal standards.

9.8.4. A low or high percent recovery for a blank does not require discarding the analytical data but it may indicate a potential problem with future analytical data. Internal standard recoveries are flagged if they are outside the recovery goals. Re-extraction of affected samples should be performed if signal-to-noise for any internal standard is less than 10:1.

9.9. Recovery Standard: Two recovery standards are used to determine the percent recoveries for the internal standards. The $^{13}C$ -1,2,3,4-TCDD is used to measure the percent recoveries of the tetra- and pentachlorinated internal standards while $^{13}C$ -1,2,3,7,8,9-HxCDD is used to determine the recovery of the hexa-hepta- and octachlorinated internal standards. $^{13}C$ -1,2,3,7,8,9-HxCDD also acts as a retention time reference for the unlabeled analog present in sample extracts. They are added to the final sample extract before HRGC/HRMS instrument analysis.

9.10. Recommended Corrective Actions and Troubleshooting Steps

- Verify satisfactory instrument performance.
- If possible, verify that no error was made while weighing the sample aliquots.
- Review the analytical procedures with the performing laboratory personnel.

## 10. CALIBRATION

10.1. On a daily basis, calibrate any balance to be used in accordance with SOP WS-QA-0041.

10.2. On a monthly basis, calibrate any autopipettor to be used in accordance with SOP WS-QA-0004.

## 11. PROCEDURE

11.1. One time procedural variations are allowed only if deemed necessary in the professional judgment of the supervisor to accommodate variation in sample matrix, radioactivity, chemistry, sample size, or other parameters. Any variation in procedure shall be completely documented using a Nonconformance Memo and is approved by a Technical Specialist and QA Manager. If contractually required, the client shall be notified. The Nonconformance Memo shall be filed in the project file.

Any unauthorized deviations from this procedure must also be documented as a nonconformance, with a cause and corrective action described.

11.2. Refer to SOP SAC-ID-0009 for the preparation of stationary source samples.

11.3. Sample Pre-Treatment

11.3.1. Paper Pulp Sludges are generally air-dried and ground prior to extraction following Section 11.5. Because of the drying procedure, a Dean-Stark water separator is optional for extraction.

11.3.2. Fly Ash — Fly ash samples are pretreated with HCl prior to extraction by both soxhlet and separatory funnel techniques.

11.3.2.1. Weigh 2-10g of sample aliquot into a clean glass jar.

11.3.2.2. Add 1.0mL of the internal standard mixture with 2 mL of acetone.

11.3.2.3. Add 150 mL of 1N hydrochloric acid and shake for 4 hours.

11.3.2.4. If the sample reacts violently with acid, then allow the sample to equilibrate for 4 hours with no shaking.

11.3.2.5. Filter the contents of the jar through a glass fiber filter.

11.3.2.6. Extract the solids as per Section 11.5, omitting the daily internal standard spike for the samples.

11.3.2.7. Extract the aqueous filtrate as per Section 11.8, using 100 mL of toluene for the first shake, and 100 mL of hexane for subsequent shakes.

11.3.2.8. Concentrate the combined toluene solutions to near dryness on a rotary evaporator at 50°C. Proceed with Section 11.11 as necessary.

Note: As an option, a Soxhlet/Dean Stark extractor system may be used, with toluene as the solvent. No sodium sulfate is added when using this option.

11.4. Waste Dilution (Still-Bottom/Fuel Oil, and other solvent-miscible materials).

11.4.1. Weigh 1 g of the waste (organic liquids, fuel oils, and solids that will dissolve in a solvent) into a vial.

11.4.2. Add 40 mL of toluene (or other solvent if the material is not miscible/soluble in toluene). Shake gently to dissolve.

11.4.3. Remove a 4.0 mL aliquot (0.1g sample equivalent) and place in a culture tube. Add 1.0 mL of daily internal standard and 1.0 mL of cleanup recovery standard, and proceed to Section 11.11.

11.5. Soxhlet Extraction (Solids, Tissues, Sludges, Wipes)

11.5.1. Pre-extract the glassware by heating the flask until the toluene is boiling. When properly adjusted, 1-2 drops of toluene per second will fall from the condenser tip into the receiver. Extract the apparatus for a minimum of four hours.

**WARNING: Open the chiller supply valves about 15 minutes before turning on the heating element and ensure that all of the condensors are cold before you turn the heating element on. Check all of the condensors about 15 minutes after starting the heating process to ensure that they are still cold and functioning properly. If this cleaning cycle is to be left unattended (e.g., overnight) the first chemist to arrive the next morning is to check all condensers to ensure that they are still cold and functioning properly.**

11.5.2. After pre-extraction, cool and disassemble the apparatus.

11.5.3. If tissues requiring % Lipids are to be extracted, for each sample weigh the concentration vessel with label and boiling chips. Record the mass on the benchsheet.

11.5.4. Weigh a well-mixed aliquot of each sample (10 g, unless otherwise specified) into a clean Soxhlet thimble. Record the mass to the nearest 0.01g. Use sodium sulfate for the batch QC (MB, LCS) for solids, and a mixture of 9 g sodium sulfate and 1 g canola oil for the batch QC for tissue matrices.

11.5.4.1. In the case of wipes, place the entire wipe sample into the Soxhlet apparatus (no thimble needed), including any liquid present with the sample. Use pre-cleaned wipes for the batch QC samples.

11.5.5. Place the thimble a Soxhlet apparatus equipped with a Dean-Stark water separator.

11.5.6. Spike all samples with 1.0 mL of internal standard solution (2 pg/µL), for a final concentration of 200 pg/g (based on a 10 g sample).

11.5.7. Spike the LCS (and MS/MSD, if present) with 50 uL of native spike.

11.5.8. Reassemble the pre-extracted apparatus and add a fresh charge (250-300 mL) of toluene to the receiver and reflux flask.

11.5.9. Reflux 16 hours, with the solvent cycling at least 5 times per hour.

**WARNING: Open the chiller supply valves about 15 minutes before turning on the heating element and ensure that all of the condensors are cold before you turn the heating element on. Check all of the condensors about 15 minutes after starting the heating process to ensure that they are still cold and functioning properly. If this cleaning cycle is to be left unattended (e.g., overnight) the first chemist to arrive the next morning is to check all condensers to ensure that they are still cold and functioning properly.**

11.5.10. Drain the water from the receiver if the receiver fills with water. Check and drain when necessary.

*Note: If the receiver holds 10 mL of liquid, and 20 g of an approximately 10% solid sample is being extracted, then approximately 9 mL of water will end up in the receiver. In this case, the receiver will not need to be emptied (insufficient liquid to overflow), but it should be checked. If the sample amount is 50, and the percent solids is still 10%, then 45 mL of water will end up in the receiver. In this case, frequent checking is required, and the receiver will need to be emptied at least 5 times.*

11.5.11. After refluxing, allow the apparatus to cool.

11.5.12. If samples DO NOT require % lipids add 100 µL of tetradecane as a keeper to the round bottom flask.

11.5.13. Proceed to Section 11.16.

11.6. SoxTherm Extraction (Solids, Tissues, Sludges,Wipes)

11.6.1. Prior to loading samples, run the system through a cleaning cycle (approximately 3 hours).

11.6.2. After pre-extraction, cool and disassemble the apparatus.

11.6.3. If tissues requiring % Lipids are to be extracted, for each sample weigh the vessel with label and boiling chips. Record the mass on the benchsheet. (If using the Soxtherm, weigh the 35 mm culture tube).

11.6.4. Weigh a well-mixed aliquot of each sample (10 g, unless otherwise

specified) into a clean Soxhlet thimble. Record the mass to the nearest 0.01g. Use sodium sulfate for the batch QC (MB, LCS) for solids, and a mixture of 9 g sodium sulfate and 1 g canola oil for the batch QC for tissue matrices.

11.6.4.1. In the case of wipes, place the entire wipe sample into the Soxhlet apparatus (no thimble needed), including any liquid present with the sample. Use pre-cleaned wipes for the batch QC samples.

11.6.5. Place the thimble into the Soxtherm apparatus.

11.6.6. Spike all samples with 1.0 mL of internal standard solution (2 pg/μL), for a final concentration of 200 pg/g (based on a 10 g sample).

11.6.7. Spike the LCS (and MS/MSD, if present) with 50 uL of native spike.

11.6.8. Reassemble the pre-extracted apparatus and add a fresh charge (140 mL) of toluene to the apparatus.

11.6.9. Program the system to boil for 1 hour, and reduce the toluene volume by 70-90 mL (volume < volume of the thimble).

11.6.10. Continue the extraction for one hour fifteen minutes, reducing the toluene volume by another 15 mL.

11.6.11. After refluxing, allow the apparatus to cool.

11.6.12. Pour the samples into round bottom flasks, and if samples DO NOT require % lipids add 100 μL of tetradecane as a keeper to the round bottom flask.

11.6.13. Proceed to Section 11.16.

11.7. Extract Splitting (Wipes)

Wipe extracts prepared using either Soxhlet or shaking techniques are split prior to further workup, to permit an archive aliquot, or analysis by an additional method. Once the extract has been concentrated using the rotovap or Turbovap, proceed as follows:

11.7.1. Add approximately 1 mL of hexane or toluene to rinse the sides of the round bottom flask. Using a pipette, withdraw the sample from the round bottom flask and transfer the liquid into a test-tube. Use additional amounts of solvents to rinse the flask. Transfer all the liquid into the test-tube. Insure that all traces of sample in the round bottom flask have been thoroughly rinsed from all surfaces. Bring the sample volume to 8.0 mL or 10.0 mL (or

appropriate volume) with the addition of rinse solvent.

11.7.2. Upon completion of the rinsing, cap the test tube and shake vigorously. Take ½ of each sample (or an appropriate amount as instructed by the client, program manager or department manager) and transfer to a culture tube. Archive the remaining sample for future use.

11.7.2.1. If only one analysis is required, then ½ of the sample is archived and the other half is analyzed.

11.7.2.2. If "N" analyses are required, then the extract is divided into "N+1" equal portions, so that one portion is archived, and a portion is used for each test.

11.8. Aqueous Samples.

11.8.1. Weigh the sample in the bottle on the top loading balance to +1g, and record the mass. Mark the water meniscus on the side of the 1-L sample bottle for later determination of the exact sample volume. Pour the entire sample (approximately 1 L) into a 2 L separatory funnel.

11.8.2. Add 100 mL methylene chloride to the sample bottle, seal, and shake for 30 seconds to rinse the inner surface. Transfer the solvent to the separatory funnel.

11.8.3. Create a blank and LCS by adding 1 L of laboratory reagent water to 2 additional separatory funnels. Add 100 mL methylene choride to each funnel.

11.8.4. For each sample, add 1 mL of daily internal standard solution into 2 mL of acetone. Add this solution to the sample in the separatory funnel. Each aliquot of spike mixture is added similarly.

11.8.5. To the LCS, add 50 µL of the precision and recovery standard dissolved into 2 mL of acetone.

11.8.6. Extract the samples by shaking each funnel for two minutes with periodic venting.

**Warning: Separatory funnel extraction with methlyene chloride is a high-risk activity. Pressure may build rapidly in the funnel. It should be vented after several seconds of shaking, and often enough to prevent build-up of pressure. Chemist performing separatory funnel extraction must wear a face shield over their safety glasses/goggles. Alternatively, the extraction can be performed behind a closed fume hood sash.**

11.8.7. Allow the organic layer to separate from the water phase for a minimum of

10 minutes. If the emulsion interface between layers is more than one-third the volume of the solvent layer, the analyst must employ mechanical techniques to complete the phase separation.

11.8.8. Repeat the extraction two additional times with methylene chloride.

11.8.9. Determine the original sample volume by re-weighing the sample bottle, or filling the sample bottle to the mark with water and transferring the water to a 1000-mL graduated cylinder. Record the sample volume to the nearest 5 mL.

11.8.10. Dry extract with sodium sulfate: Place glass wool in a precleaned filter funnel. Rinse glass wool with methlyene chloride and load funnel with methlyene chloride -rinsed $Na_2SO_4$. Pour extract through $Na_2SO_4$ to remove water. Rinse $Na_2SO$ with fresh methlyene chloride and collect in round bottom flask.

11.8.11. Transfer the extract to a 500-mL round-bottom, add approximately 100 µL of tetradecane and concentrate on a rotary evaporator or TurboVap.

11.8.12. Perform macro concentration as detailed in Section 11.16.

11.9. Breaking Emulsions

There are several useful methods to decrease or eliminate emulsion in aqueous samples when extracting with methlyene chloride. These methods may include stirring with a pipette to manually breakup the emulsions or to transfer the sample into centrifuge tubes and centrifuge at approximately 3000 RPM. The most useful method is to use a 1:1 $NaOH/H_2O$ solution to change the pH enough to disrupt the emulsion phase, which works 90% of the time. See Section 7.3.6 for reagent preparation.

11.9.1. Check the pH of the sample to verify that the pH is between 3 and 7. If the pH is greater than 7, consult the supervisor and client for instructions.

11.9.2. Pour approximately 100 mL of the 1:1 $NaOH/H_2O$ into a 1 L amber glass bottle (AGB).

11.9.3. Drain the sample with the emulsion from the 2 L separatory funnel into the 1 L AGB and let it stand.

11.9.4. Empty the aqueous waste into the LLE waste drum.

11.9.5. Pour the solution with methlyene chloride back into the same 2 L separatory funnel and drain the methlyene chloride phase through $Na_2SO_4$ into a 500 mL round-bottom flask.

11.9.6. Empty the aqueous waste into the LLE waste drum.

11.9.7. Proceed with macro concentration (Section 11.16).

11.10. Filter/PUF Samples

11.10.1. Place the glass sleeve containing the PUF and the Quartz Fiber Filter into the pre-cleaned Soxhlet extractor charged with toluene.

11.10.2. Add 2 mL (4000 pg) of 1613/8290 daily Internal Standard solution to all samples and QC.

11.10.3. Add 50 uL of 1613/8290 Native Spike to the LCS.

11.10.4. Extract the samples and QC for a minimum of 16 hours.

11.10.5. Concentrate the extract from the round bottom flask with hexane and adjust the volume.

11.10.6. Transfer the extract from the round bottom flask with hexane and adjust the volume.

11.10.7. Split the extract 50:50 for analysis and archive.

11.10.8. Proceed to Section 11.11.

11.11. Extract Clean-Up

11.11.1. For all samples which are not air media, spike 1.0 mL of the Cleanup Recovery Standard (CRS) prior to any cleanup into the round bottom flasks containing the samples and QC Extracts (See also Section 9.71)

11.11.2. Proceed with further cleanups as dictated by the sample matrix and extract color. The "Option C" cleanup (Section 11.12 ) and the IFB Upper Column cleanup (Section 11.13) are applied to samples with high levels of interferences. The IFB column cleanup (Section 11.14) is applied to all samples.

11.12. Acid Partitioning ("Option C")

11.12.1. Use this clean up as needed on samples with high levels of interferences. Consult with a lead chemist or department manager to determine applicability.

11.12.2. Partition the extract in 50-125 mL of hexane against 40 mL concentrated $H_2SO_4$ in a separatory funnel. Shake for two minutes. Remove and discard

the $H_2SO_4$ layer (bottom). Repeat the acid washing until no color is visible in the acid layer (perform a maximum of four acid washings).

**Warning: Shaking with a concentrated caustic is a high-risk activity. Analyst must wear a face shield over safety glasses/goggles, or the shaking must take behind a closed hood sash.**

11.12.3. Partition the extract against 50 mL of distilled $H_2O$. Shake for two minutes. Remove and discard the aqueous layer (bottom). Dry the extract by pouring it through a funnel containing anhydrous sodium sulfate and collect it in a round-bottom flask. Rinse the sodium sulfate with two 15 mL portions of hexane, add the rinsates to the flask, and concentrate the hexane solution to near dryness on a rotary evaporator (35°C water bath), making sure all traces of toluene (when applicable) are removed. (Use of blow-down with an inert gas to concentrate the extract is also permitted.) The DI $H_20$ partition is applied only as samples warrant it at the discretion of the analyst.

11.13. IFB Upper Column Cleanup

11.13.1. Use this clean up as needed on samples with high levels of interferences. Consult with a lead chemist or department manager to determine applicability.

11.13.2. Set up the upper of the two chromatography columns as depicted in Figure 2. The column (20 mm diameter) is packed in this order: a glass wool plug, 2 g activated silica gel, 4 g Acid silica gel, 2 g activated silica gel, and 1 g sodium sulfate.

11.13.3. Pre-rinse the column with 20 mL hexane, and discard the rinsate.

11.13.4. Add extract to the column. Rinse extract vessel 2 times with 1 mL each of hexane and add to column.

11.13.5. Elute 60 mL hexane directly onto acid silica column (upper column).

11.13.6. Collect the eluate, and concentrate before proceeding with the IFB cleanup (Section 11.14).

11.14. IFB Column Cleanup

Most samples will undergo this cleanup, either direction following concentration on the rotovap, or following the cleanup in Section 11.12 (Option C) or Section 11.13 (IFB Upper Column).

11.14.1. Set up two chromatography columns as depicted in Figure 2. The upper column (20 mm diameter) is packed in this order: a glass wool plug, 2 g activated silica gel, 4 g Acid silica gel, 2 g activated silica gel, and 1 g

sodium sulfate. The lower column (15 mm diameter) is packed in this order: a glass wool plug, 6 g acid alumina, and 1 g sodium sulfate.

11.14.2. Pre-rinse each column with 20 mL hexane, and discard the rinsate.

11.14.3. Put one column above the other.

11.14.4. Add extract to the top column (silica column). Rinse extract vessel 2 times with 1 mL each of hexane and add to column.

11.14.5. Elute 60 mL hexane directly onto acid silica column (upper column).

11.14.6. Discard upper column.

11.14.7. Elute lower column with 10 mL of 20% methylene chloride/hexane. Discard in proper waste stream.

11.14.8. Elute lower column with 30 mL of 65% methylene chloride/hexane. Save and collect in culture tube.

11.14.9. Proceed with additional cleanups as necessary.

11.15. Carbon Column Clean-up (D2 Column)

Prepare an activated Carbon & Silica Gel column as described in below. Refer to the diagram in Figure 3 as well.

11.15.1. Push a glasswool plug down to the 3 inch mark in a pre-cut D2 column.

11.15.2. Add 1 g of 5% activated carbon/silica. Top with a glasswool plug.

11.15.3. With the column oriented with "A" on the top (and the carbon on the lower end of the column), pre-elute with 5 mL 1:1 methlyene chloride :cyclohexane.

11.15.4. Turn over (so that the "B" end is on top, and the carbon is now on the upper end of the column) and pre-elute with 5 mL 1:1 methlyene chloride :cyclohexane.

11.15.5. Discard pre-eluates.

11.15.6. Dilute the extract to 1 mL with hexane and transfer to the column (still oriented in the "B" direction).

11.15.7. Rinse sample vial onto the column with 2 x 2 mL 1:1 methlyene chloride:cyclohexane.

11.15.8. Elute with 6 mL 1:1 methlyene chloride :cyclohexane

11.15.9. Elute with 5 mL 75:25 methlyene chloride:methanol

11.15.10. Discard eluates.

11.15.11. Turn the column over (so that the "A" end is on top), and elute with 30 mL of toluene. Collect this eluate.

11.15.12. Concentrate to NEAR dryness using the Rotovap (Section 11.16) or Turbovap (Section 11.17), then proceed to the recovery standard step (Section 11.18).

11.16. Macro-concentration (Rotary Evaporator)

Concentrate the extracts in separate round bottom flasks on rotary evaporator.

11.16.1. Assemble the rotary evaporator according to manufacture's instructions, and warm the water bath. On a daily basis, preclean the rotary evaporator by solvent rinsing. Between samples, 2-3 rinses of toluene followed by a 2-3 mL rinse of hexane should be rinsed down the feed tube into a waste beaker.

| Rotovap Conditions | | |
|---|---|---|
| **Solvent** | **Bath Temperature (C)** | **Vacuum Setting (PSI)** |
| Toluene | 80 | 25 |
| Hexane | 65 | 15 |
| Methylene Chloride | 70 | |

11.16.2. Attach the round bottom flask containing the sample extract to the rotary evaporator. Slowly apply vacuum to the system, and begin rotating the sample flask.

11.16.3. Lower the flask into the water bath and adjust the speed of rotation and the temperature as required. At the proper rate of concentration, the flow of solvent into the receiving flask will be steady, but no bumping or visible boiling of the extract will occur.

*NOTE: If the rate of concentration is too fast, analyte loss may occur.*

11.16.4. For samples requiring % Lipids analysis:

11.16.4.1. Concentrate until the tolune has been completely removed. Add approximately 25 mL hexane and concentrate to ensure that only the lipids are present.

11.16.4.2. Dry the concentration vessel and let stand at room temperature. Weigh the vessel and record on the benchsheet.

11.16.4.3. Calculate % lipids as follows:

$$\% \text{ Lipids} = \frac{\text{Final Vessel Mass - Initial Vessel Mass}}{\text{Sample Size}} \times 100\%$$

11.16.5. Proceed to extract cleanups, or transfer to a micro concentration vial for the recovery standard step (Section 11.18).

11.17. Micro-concentration (Turbovap)

Concentrate the extracts in 35 mL culture tubes in a turbo-evaporator. The turbo-evaporator model that the laboratory uses can hold up to 50-35 mL culture tubes. Other turbo-evaporator models can be used that may or may not have the same culture tube sizes and/or capacity. Adjust temperature according to solvent (65°C for toluene and 50°C for hexane or hexane/ methlyene chloride mixtures)

11.17.1. The evaporating times are dependent on sample volume and solvent. The following are examples and can change from sample to sample. Each sample should be checked in intermittent intervals to make sure samples do not go dry.

11.17.2. When evaporating 30 mL toluene, it will normally take approximately 30-50 minutes with the temperature setting described above.

11.17.3. When evaporating 30 mL hexane/ methlyene chloride, it will normally take approximately 10-20 minutes with the temperature setting described above.

11.17.4. For samples requiring % Lipids analysis:

11.17.4.1. Evaporate to near dryness. Add approximately 5 mL hexane and concentrate to ensure that only the lipids are present.

11.17.4.2. Dry the concentration vessel and let stand at room temperature. Weigh the vessel and record on the benchsheet.

11.17.4.3. Calculate % lipids as follows:

$$\% \text{ Lipids} = \frac{\text{Final Vessel Mass - Initial Vessel Mass}}{\text{Sample Size}} \times 100\%$$

11.17.5. Proceed to extract cleanups, or transfer to a micro concentration vial for the recovery standard step (Section 11.18).

11.18. Recovery Standard

11.18.1. Transfer extracts to a micro concentration vial (test tubes and other small vessels may also be used)

11.18.2. With a stream of dry, purified nitrogen, reduce the extract volume to

approximately 100 µL.

11.18.3. Add 20 µL of the recovery standard solution (Table 2).

11.18.4. With a stream of dry, purified nitrogen, reduce the extract volume to 20 µL.

11.18.5. Transfer the extract to an autoinjection vial and store in the dark at room temperature.

11.18.6. A smaller final volume can be used to decrease the detection limit upon client approval.

11.18.7. A larger final volume can be use to decrease potential matrix interferences, if the column and acid cleanups were unsuccessful.

11.19. Sample Dilution Procedure

11.19.1. Simple dilutions: Dilutions from 2X to 50X can be achieved without respiking the final extract. The calculation to determine the final extract concentration is as follows:

(Concentration of the original extract) x (amount of aliquot taken) x (volume of diluted extract) = final concentration of dilution.

Ex: 50X dilution of original 10 g/20 µL sample
(10 g/20 µL) x (2 µL aliquot + 98 µL keeper) = 1 g/100 µL FV

Record the final sample concentration on the extract label.

11.19.2. Complex dilution requiring respiking of IS and RS:

Dilutions greater than 50x must be done by diluting and respiking the extract with IS and RS. This procedure may require serial dilution to be performed. If this procedure is done, then the sample size must be adjusted to reflect the aliquot taken.

Ex. 100X dilution (original sample with 10 g/20 µL final volume)

Take a 2 µL aliquot (1/10 of original sample) and add 18 µL of solvent keeper. Take a 2 µL aliquot of the dilution (1/100 of the original sample), respike with 1 mL IS and 20 µL RS, reduced to 20 µL FV.

Record the final sample concentration of the extract label.

## 12. CALCULATIONS/DATA REDUCTION

12.1. Not applicable

## 13. METHOD PERFORMANCE

It must be documented that all applicable system performance criteria specified were met before analysis of any sample is performed. .

13.1. The group/team leader has the responsibility to ensure that this procedure is performed by an associate who has been properly trained in its use and has the required expertise.

13.2. Method Detection Limit

The laboratory must generate a valid method detection limit for each analyte of interest. The MDL must be below the reporting limit for each analyte. The procedure for determination of the method detection limit is given in 40 CFR Part 136, Appendix B, and further defined in SOP SAC-QA-0006. MDLs are available in the Quality Assurance Department.

13.3. Initial Demonstration

The laboratory must make an initial demonstration of capability for each individual method. Demonstration of capability for both soil and water matrices is required. This requires analysis of QC check samples containing all of the standard analytes for the method. For some tests it may be necessary to use more than one QC check mix to cover all analytes of interest.

13.3.1. Four aliquots of the QC check sample are analyzed using the same procedures used to analyze samples, including sample preparation. The concentration of the QC check sample should be less than or equivalent to the LCS samples.

13.3.2. Calculate the average recovery and standard deviation of the recovery for each analyte of interest. Compare these to the laboratory generated QC Limits.

13.4. If any analyte does not meet the acceptance criteria the test must be repeated. Only those analytes that did not meet criteria in the first test need to be evaluated. Repeated failure for any analyte indicates the need for the laboratory to evaluate the analytical procedure and take corrective action.

## 14. POLLUTION CONTROL

It is TestAmerica's policy to evaluate each method and look for opportunities to minimize waste generated (i.e., examine recycling options, ordering chemicals based on quantity needed, preparation of reagents based on anticipated usage and reagent stability). Employees must abide by the policies in Section 13 of the Corporate Environmental Health and Safety Manual (CW-E-M-001) for "Waste Management and Pollution Prevention."

14.1. The use of Roto-vaps and Turbo-vaps rather than Kuderna-Danish reduction allows extraction solvents to be collected and disposed of rather than released to the atmosphere.

14.2. Toluene, which is a less hazardous solvent, has been substituted for benzene as an extraction solvent.

14.3. The use of SoxTherm extraction rather than soxhlet extraction, when appropriate, reduces the volume of solvent used.

14.4. Standards should be prepared in volumes consistent with laboratory use to minimize the volume of expired standards that must be discarded.

14.5. All waste will be disposed of in accordance with Federal, State, and Local regulations. Where reasonably feasible, technological changes have been implemented to minimize the potential for pollution of the environment.

14.6. Do not allow waste solvent to vent into the hoods. All solvent waste is stored in capped containers unless they are being filled.

14.7. Transfer waste solvent from collection cups (tri-pour and similar containers) to jugs and/or carboys as quickly as possible to minimize evaporation.

## 15. WASTE MANAGEMENT

Waste management practices are conducted consistent with all applicable rules and regulations. Excess reagents, samples and method process wastes are disposed of in an accepted manner. Waste description rules and land disposal restrictions are followed. Waste disposal procedures are incorporated by reference to SOP WS-EHS-0001. The following waste streams are produced when this method is carried out.

15.1. Extracted aqueous/leachate samples contaminated with methylene chloride are collected at the fume hood in a 5-gallon or smaller carboy. If the samples are not at a neutral pH, add small quantities of sodium bicarbonate to bring the waste to neutral. Stir well. Once neutralized, immediately pour the carboy contents into a blue plastic LLE drum in the H3 closet. When full to between one and four inches of the top, or after no more than 75 days, move the LLE drum to the waste collection area for shipment.

15.2. Extracted soil samples and thimbles, extracted PUF filters, XAD-2 resin, paper funnel filters, glass wool, sodium sulfate, assorted disposable glassware, fish/crawfish or similar materials contaminated with methylene chloride. Silica gel, alumina, carbon and sodium sulfate, from column clean-ups, contaminated with various solvents and eluates. Dump the materials into a contaminated lab trash bucket. When the bucket is full or after no more than one year, tie the plastic bag liner shut and put the lab trash into the steel collection drum in the H3 closet. When the drum is full or after no more than 75 days, move it to the waste collection area for shipment.

15.3. Flammable solvent waste generated during glassware and sodium sulfate cleaning. Flammable solvent waste collected during roto-vap/turbo-vap reduction of extracted

samples. Keep waste flammable solvents separated from waste methylene chloride. Collect the waste flammable solvents in tripours during use. Empty the tripours into a 1-liter to 4-liter carboy at the fume hood. When the carboy is full, or at the end of your shift, whichever comes first, empty the carboy into the steel flammable solvent drum in the H3 closet. When full to between one and four inches of the top, or after no more than 75 days, move the steel drum to the waste collection area for shipment.

15.4. Waste methylene chloride generated during quartz fiber filter preparation, PUF adsorbent preparation, XAD-2 resin preparation, PUF/XAD-2 cartridge preparation, glassware rinsing and sodium sulfate pre-rinsing.. Waste methylene chloride collected during roto-rap/turbo-vap reduction of extracted samples. Keep waste methylene chloride separated from waste flammable solvents. Collect the waste methylene chloride in tripours during use. Empty the tripours into a 1-liter to 4-liter carboy at the fume hood. When the carboy is full, or at the end of your shift, whichever comes first, empty the carboy into the steel methylene chloride drum in the H3 closet. When the drum is full to between one and four inches of the top, or after no more than 75 days, move the steel drum to the waste collection area for shipment.

15.5. Contaminated sulfuric acid used during extract cleanup. Collect the used sulfuric acid in empty, 2.5-liter, plastic coated jars. When full or after one year, whichever comes first, transfer these jars to the waste collection area for shipment.

15.6. Contaminated distilled water used during extract cleanup. Collect the contaminated water in a 1-liter to 4-liter carboy at the fume hood. When the carboy is full, or at the end of your shift, whichever comes first, empty the carboy into the plastic LLE drum in the H3 closet. When full to between one and four inches of the top, or after no more than 75 days, move the plastic drum to the waste collection area for shipment.

## 16. REFERENCES/CROSS REFERENCES

16.1. SW846, Test Methods for Evaluating Solid Waste, Third edition, Update IV. Method 8290A Polychlorinated Dibenzodioxins (PCDDs) and Polychlorinated Dibenzofurans (PCDFs) by high-Resolution Mass Spectrometry February 2007.

16.2. SW846, Test Methods for Evaluating Solid Waste, Third edition, Update III. Method 8290 Polychlorinated Dibenzodioxins (PCDDs) and Polychlorinated Dibenzofurans (PCDFs) by high-Resolution Mass Spectrometry September 1994.

16.3. SW846, Test Methods for Evaluating Solid Waste, Third edition, Update III. Method 0023A, Sampling Method for Polychlorinated Dibenzo-p-dioxins and Polychlorinated Dibenzofurans Emissions from Stationary Sources. December 1996.

16.4. Compendium Method TO-9A "Determination of Polychlorinated, Polybrominated, and Brominated, Cholorinated Dibenxo-p-dioxins and Dibenzofurans in Ambient Air",

EPA compendium of Methods for the Determination of Toxic Organic Compounds in Ambient Air, second edition, January 1997.

16.5. Protocol for the Analysis of 2,3,7,8-TCDD by HRGC/HRMS". J. S. Stanley and T. M. Sack, EPA 600/4-86-004.

16.6. "Safety in Academic Chemistry Laboratories", American Chemical Society Publication, Committee on Chemical Safety (3rd Edition, 1979.)

16.7. "Carcinogens - Working with Carcinogens". Department of Health, Education, and Welfare, Public Health Service, Center for Disease Control. National Institute for Occupational Safety and Health. Publication No. 77-206, August 1977.

16.8. "OSHA Safety and Health Standards, General Industry", (29 CFR 1910) Occupational Safety and Health Administration, OSHA 2206 (revised January 1976).

## 17. METHOD MODIFICATIONS

17.1. Deviations from EPA 8290 and 8290A.

17.1.1. Tetradecane instead of nonane is used as the final solvent to increase the stability of extracts and standards. Tetradecane is less volatile than nonane. Loss of analyte as a result of solvent incompatibility is monitored through recovery checks and calibration acceptance criteria.

17.1.2. Extract clean-ups are performed at the discretion of the analyst when interferences are observed. Then, the analyst should select the clean-up procedure appropriate to the interferent.

17.1.3. Section 7.4.6.4 of Method 8290 indicates that extracts should be transferred with hexane, then toluene. Toluene is used to transfer extracts to maintain compound solubility and minimize analyte loss.

17.1.4. Section 7.5.1.2 of Method 8290 specifies that a NaCl solution should be used for partitioning. Instead, the laboratory uses laboratory water only. NaCl is used to break up emulsions that may form. An analyst may use NaCl, NaOH, or any other mechanical means to break up an emulsion.

17.1.5. Section 7.5.3 of Method 8290 specifies that hexane is used as a column elution solvent. The laboratory uses cyclohexane to achieve better and more reproducible separation of the target analyte from the interferent.

17.1.6. Carbon columns are packed with silica gel in place of celite. Elution solvents are changed accordingly. (SOP Section 11.4; Method 8290 Section 7.5.3.2, 8290A Section 7.3.6.).

17.2. Modifications from TO-9A method

17.2.1. Quartz Fiber Filters are cleaned by Soxhlet extraction with methylene chloride, not baked at 400 degrees C for 5 hours.

17.2.2. The PUF material may be pre-cleaned with methylene chloride or other appropriate solvent. The PUFs are not reused.

17.2.3. The $^{37}$Cl-2,3,7,8-TCDD surrogate is present at varying levels in the calibration curve (0.5-200 pg/ µL).

17.2.4. Samples are extracted with toluene not benzene.

17.2.5. Concentration is performed by rotary evaporation not Kuderna-Danish.

17.2.6. All cleanup procedures are optional and applied based on the analyst's discretion.

17.2.7. The laboratory uses 2 labeled recovery standard for the quantitation of labeled internal standards.

17.2.8. The final volume is adjusted to 20 µL in tetradecane.

17.2.9. Calibration and quantitation are performed in accordance to this SOP.

## 18. ATTACHMENTS

18.1. Table 1 - Types of Matrices

18.2. Table 2 - Composition of Sample Fortification and Recovery Standard Solutions.

18.3. Table 3 - The Seventeen 2,3,7,8-Substituted PCDD and PCDF Congeners

18.4. Figure 1 - Analysis Flowchart

18.5. Figure 2 — IFB column cleanup

18.6. Figure 3 — D2 Column cleanup

18.7. Appendix A - Periodic Wipe Test Performance

## 19. REVISION HISTORY

19.1. WS-IDP-0005, Revision 1, Effective 10/2/2008

19.1.1. Added 8290A references.

19.1.1.1. Extract and standard storage.

19.1.1.2. Removal of MS/MSD.

19.1.2. Updated to TestAmerica format.

19.1.3. Separated the analytical steps from the preparation steps, this SOP is concerned only with the sample preparation.

19.2. WS-ID-0005, Revision 6.7, Effective 8/21/2008

19.2.1. Changed the word "toluene" to "acetone" in 7.11.2.

19.3. WS-ID-0005, Revision 6.6, Effective 4/9/2008

19.3.1. Added South Carolina rule to prepare an MS/MSD with every batch.

19.3.2. Modified to include extraction and analysis of ambient air samples collected in filter/PUF material.

## TABLE 1

### Types of Matrices, Sample Sizes and 2,3,7,8-TCDD-Based Method Calibration Limits (Parts per Trillion)

| | Water | Soil Sediment Paper Pulp | Fly Ash | Human/ Fish Tissue | Adipose Tissue | Sludges, Fuel Oil | Still-Bottom | Ambient or Source Samples |
|---|---|---|---|---|---|---|---|---|
| Lower MCL(a) | 0.01 | 1.0 | 2.0 | 1.0 | 2.0 | 10 | 20 | 40 |
| Upper MCL(a) | 4.0 | 400 | 400 | 400 | 400 | 2000 | 4000 | 8000 |
| Weight (g) | 1000 | 10 | 10 | 10 | 10 | 2.0 | 1.0 | 1 sample |
| | | | | | | | | |
| IS Spiking Levels (ng) | 2.0 | 2.0 | 2.0 | 2.0 | 2.0 | 2.0 | 2.0 | 4.0 |
| | | | | | | | | |
| Final Extract Volume (μL) | 20 | 20 | 20 | 20 | 20 | 20 | 20 | 20 |

(a) For other congeners, multiply the values by 1 for TCDF, by 5 for PeCDD/PeCDF/HxCDD/HxCDF/HpCDD/HpCDF, and by 10 for OCDD/OCDF.

# TABLE 2

## Composition of the Sample Fortification and Recovery Standard Solutions

| Analyte | Sample Fortification Solution Concentration pg/µL; Solvent: Isooctane | Recovery Standard Solution Concentration pg/µL; Solvent: Tetradecane |
|---|---|---|
| $^{13}$C -2,3,7,8-TCDD | 2[(a)], 100[(c)] | -- |
| $^{13}$C -2,3,7,8-TCDF | 2[(a)], 100[(c)] | -- |
| $^{13}$C -1,2,3,4-TCDD | -- | 100 |
| $^{13}$C -1,2,3,7,8-PeCDD | 2[(a)], 100[(c)] | -- |
| $^{13}$C -1,2,3,7,8-PeCDF | 2[(a)], 100[(c)] | -- |
| | | |
| $^{13}$C -1,2,3,6,7,8-HxCDD | 2[(a)], 100[(c)] | -- |
| $^{13}$C -1,2,3,4,7,8-HxCDF[(d)] | 2[(a)], 100[(c)] | -- |
| $^{13}$C -1,2,3,7,8,9-HxCDD | -- | 100 |
| | | |
| $^{37}$Cl-2,3,7,8-TCDD[(b)(c)] | 0.8[(b)], 100[(c)] | |
| | 100[(c)] | |
| $^{13}$C -2,3,4,7,8-PeCDF[(c)] | 100[(c)] | |
| $^{13}$C -1,2,3,6,7,8-HxCDF[(c)(d)] | 100[(c)] | |
| $^{13}$C -1,2,3,4,7,8-HxCDD[(c)] | 100[(c)] | |
| $^{13}$C -1,2,3,4,7,8,9-HpCDD[(c)] | 100[(c)] | |
| | | |
| $^{13}$C -1,2,3,4,6,7,8-HpCDD | 2[(a)], 100[(c)] | -- |
| $^{13}$C -1,2,3,4,6,7,8-HpCDF | 2[(a)], 100[(c)] | -- |
| | | |
| $^{13}$C -OCDD | 4[(a)], 200[(c)] | -- |

(a) Standard 8290, Method 23, Method 0023A, TO9 and TO9A Sample Fortification Solution concentrations
(b) Method TO9 and TO9A surrogate concentrations
(c) Method 23 and Method 0023A surrogate concentrations
(d) $^{13}$C -1,2,3,6,7,8-HxCDF is used as a Sample Fortification Solution and $^{13}$C -1,2,3,4,7,8-HxCDF is used as a surrogate solution in Method 23 and Method 0023A

## TABLE 3

### The Seventeen 2,3,7,8-Substituted PCDD and PCDF Congeners

| PCDD | PCDF |
|---|---|
| 2,3,7,8-TCDD(*) | 2,3,7,8-TCDF(*) |
| 1,2,3,7,8-PeCDD(*) | 1,2,3,7,8-PeCDD(*) |
| 1,2,3,6,7,8-HxCDD(*) | 2,3,4,7,8-PeCDF |
| 1,2,3,4,7,8-HxCDD | 1,2,3,6,7,8-HxCDF |
| 1,2,3,7,8,9-HxCDD(+) | 1,2,3,7,8,9-HxCDF |
| 1,2,3,4,6,7,8-HpCDD(*) | 1,2,3,4,7,8-HxCDF(*) |
| 1,2,3,4,5,6,7,8-OCDD(*) | 2,3,4,6,7,8-HxCDF |
| | 1,2,3,4,6,7,8-HpCDF(*) |
| | 1,2,3,4,7,8,9-HpCDF |
| | 1,2,3,4,5,6,7,8-OCDF |

(*)The $^{13}C$ -labeled analog is used as an internal standard.
(+)The $^{13}C$ -labeled analog is used as a recovery standard.

**FIGURE 1 — Flowchart of Process**

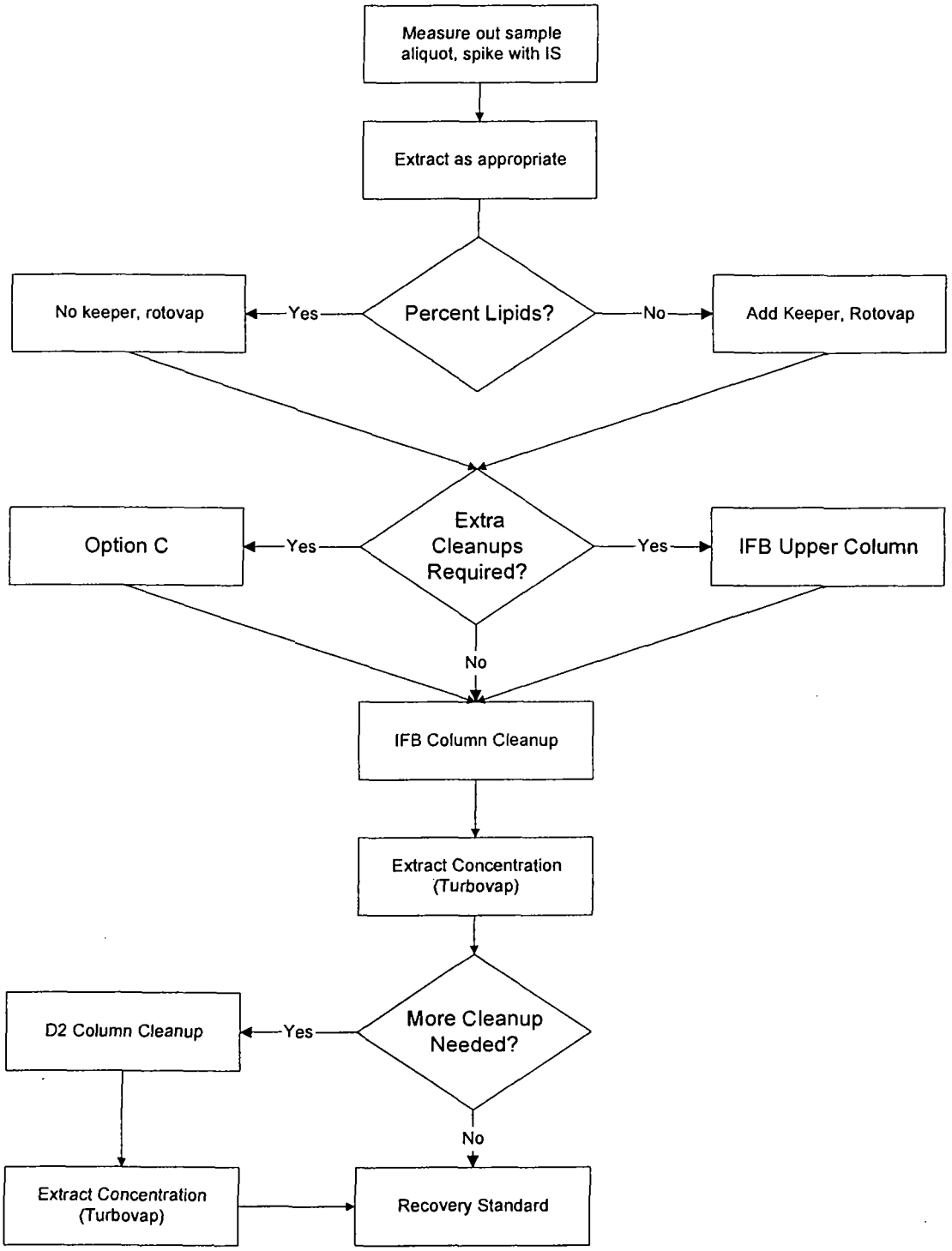

**Figure 2 – Diagram of IFB Column Cleanup**

Use 20 mm column for top column (IFB Column)
Use 16 mm column for bottom column* (Acid Alumina)
Note: Upper and lower columns are piggy backed for IFB cleanup, upper column only can be used for additional cleaning.

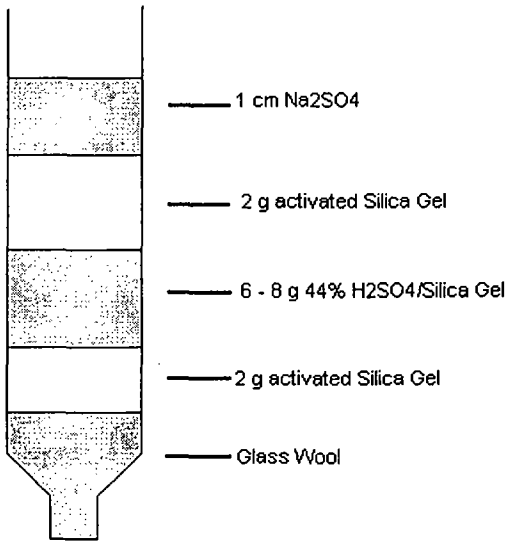


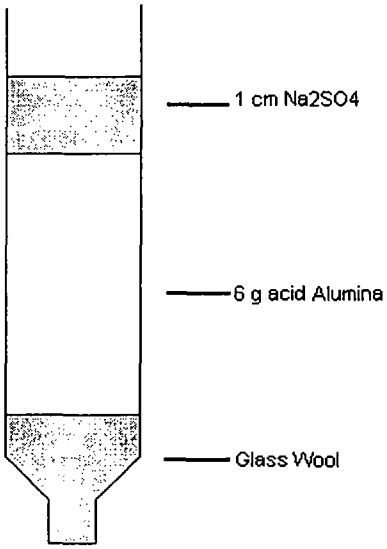

**Figure 3— D2 Carbon Column:**

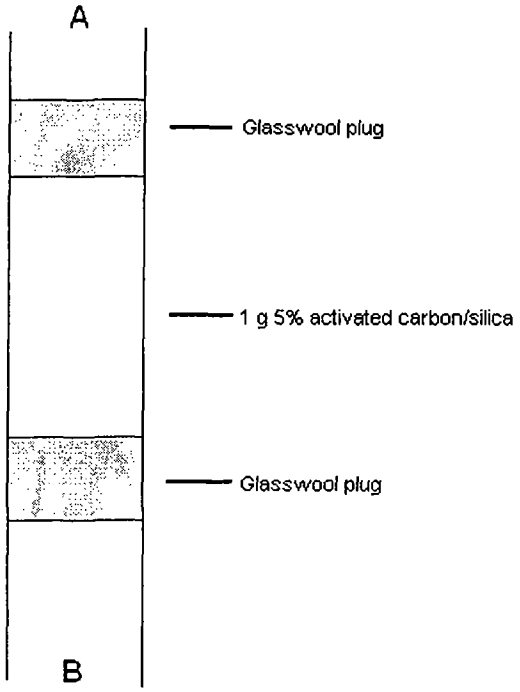

## APPENDIX A — Screening the Laboratory for 2,3,7,8 Congeners

This procedure is designed for the periodic evaluation of potential contamination by 2,3,7,8-substituted PCDD/PCDF congeners of the working areas inside the laboratory.

PERFORMING WIPE TEST
Perform the wipe tests on surface areas of two inches by one foot with laboratory wipers saturated with distilled-in-glass acetone or appropriate solvent using a pair of clean stainless steel forceps. Use one wiper for each of the designated areas. Combine the wipers to one composite sample in an extraction jar containing 200 mL distilled-in-glass hexane. Place an equal number of unused wipers in 200 mL hexane and use this as a control.

SAMPLE PREPARATION
Close the jar containing the wipes and 200 mL hexane and extract for 20 minutes using a wrist-action shaker. Use an appropriate means to reduce the volume to approximately 1.0 mL. Put through an alumina column to clean up potential interfering compounds. Add appropriate amount of recovery standard.

EXTRACT ANALYSIS
Concentrate the contents of the vial to a final volume of 20 µL (either in a minivial or in a capillary tube). Inject 2 µL of each extract (wipe and control) onto a capillary column and analyze for 2,3,7,8-substituted PCDDs/PCDFs as specified in the analytical method Section 11 (this exhibit). Perform calculations according to Section 12 (this exhibit).

REPORTING FORMAT
Report the presence of 2,3,7,8-substituted PCDDs and PCDFs as a quantity (pg or ng) per wipe test experiment (WTE). Under the conditions outlined in this analytical protocol, a lower limit of calibration of 25 pg/WTE is expected for 2,3,7,8-TCDD. A positive response for the blank (control) is defined as a signal in the TCDD retention time window at any of the masses monitored which is equivalent to or above 8 pg of 2,3,7,8-TCDD per WTE. For other congeners, use the multiplication factors listed in Table 1, footnote (a) (e.g., for OCDD, the lower MCL is 25 x 5 = 125 pg/WTE and the positive response for the blank would be 8 x 5 = 40 pg). Also, report the recoveries of the internal standards during the simplified cleanup procedure.

FREQUENCY OF WIPE TESTS
Wipe tests should be performed when there is evidence of contamination in the method blanks.

CORRECTIVE ACTION
An upper limit of 25 pg per TCDD isomer and per wipe test experiment is allowed. (Use multiplication factors listed in footnote (a) from Table 1 for other congeners.) This value corresponds to the lower calibration limit of the analytical method. Steps to correct the contamination must be taken whenever these levels are exceeded. To that effect, first vacuum the working places (hoods, benches, sink) using a vacuum cleaner equipped with a high-efficiency

particulate absorbent (HEPA) filter and then wash with a detergent. A new set of wipes should be analyzed before anyone is allowed to work in the dioxin area of the laboratory.

The test results and the decontamination procedure must be reviewed with EH&S.

# APPENDIX D

## Example Chain of Custody Documents, Labels, Custody Seals, and Field Forms

# DAILY FIELD REPORT

Loureiro Engineering Associates, Inc.

**LEA Comm. No.** **00100 .** Page _____ of _____
Project General Overhead Date ___/___/___
Location LEA, Plainville, CT
Client

Arrived at Site _____ Departed from Site _____ Vehicle _____
Odometer (Start) _____ Return _____

**Site Activities**

- [ ] Soil Sampling
- [ ] Groundwater Sampling
- [ ] Surface Water Sampling
- [ ] Vapor/Air Sampling
- [ ] Concrete Sampling
- [ ] Other Sampling
- [ ] Other Sampling
- [ ]
- [ ] Well Development
- [ ] Geoprobe Work
- [ ] Concrete Coring
- [ ] Construction
- [ ] Waste Management
- [ ]
- [ ] Inspection
- [ ] Site Walk Over
- [ ] Surveying
- [ ] Other (Describe)

**Current Project Information**

Last Sample Number Used _____
Last Location ID Used _____
Current Location (if not complete) _____
Sampling for _____
Laboratories used _____
Paperwork & Equipment left at/in _____
Site Contact _____
Contractors on Site _____

Time and place to meet contractors _____

**Non-productive Time**

- [ ] None
- [ ] Equipment Breakdown
- [ ] Late
- [ ] Weather
- [ ] Missing Equipment
- [ ] Other (Describe)

**Quality Assurance Checks**

| Yes | N/A | No | |
|---|---|---|---|
| | | | Sample labels complete |
| | | | Sample/cooler seals OK |
| | | | All samples obtained |
| | | | Chains of custody |
| | | | All forms/logs complete |
| | | | Site condition OK |
| | | | Site H&S Plan on site |
| | | | Instruments calibrated |

**Checked By**

_____

**Residuals Disposition**

| Item | Approx. Amount | Container ID |
|---|---|---|
| Soil/Solid | | |
| Groundwater | | |
| Decon Fluid | | |
| PPE | | |
| Other | | |

**Weather Conditions**

Temperature _____ Precipitation _____ Wind _____
Comments

**Expendable Items Used**

| Qty | Item | LEA Number |
|---|---|---|
| | | |
| | | |
| | | |
| | | |
| | | |
| | | |
| | | |
| | | |
| | | |
| | | |
| | | |
| | | |
| | | |
| | | |
| | | |
| | | |

**Equipment Used**

| Qty | Item | LEA Number |
|---|---|---|
| | | |
| | | |
| | | |
| | | |
| | | |
| | | |
| | | |
| | | |
| | | |
| | | |
| | | |
| | | |
| | | |
| | | |
| | | |
| | | |

Field Personnel _____ _____ ***Signature***
_____ _____ _____

Loureiro Engineering Associates, Inc.

# DAILY FIELD REPORT

## Supplemental Sheet

| | | |
|---|---|---|
| **LEA Comm. No.** | **0000100.001** | Page _____ of _____ |
| Project | | Date ___/___/_____ |
| Location | LEA, Plainville, CT | |
| Client | | |

Description of Site Activities

Field Personnel _____ _____ ***Signature***

_____ _____ _____

Loureiro Engineering Associates, Inc.

# DAILY FIELD REPORT
# CALIBRATION RECORD

**LEA Comm. No.** **0000100.001**
Project
Location LEA, Plainville, CT
Client

Page _____ of _____
Date ___/___/_____

pH Meter/Serial # _____

| | Time | pH 4.01 | pH 7.00 | pH 10.01 | Spec. Cond. | ORP | DO |
|---|---|---|---|---|---|---|---|
| Initial Calibration | | | | | | | |
| Calibration Check | | | | | | | |
| Calibration Check | | | | | | | |

Turbidity Meter/Serial # _____

| | Time | 0 NTU | 20 NTU | 100 NTU | 800 NTU |
|---|---|---|---|---|---|
| Initial Calibration | | | | | |
| Calibration Check | | | | | |
| Calibration Check | | | | | |

PID Meter/Serial # _____

| | Time | Standard | Meter Reading | Zero with |
|---|---|---|---|---|
| Initial Calibration | | | | |
| Calibration Check | | | | |
| Calibration Check | | | | |

Balance/Serial # _____

| | Time | Standard | Balance |
|---|---|---|---|
| Initial Calibration | | | |
| Calibration Check | | | |
| Calibration Check | | | |

Comments

Field Personnel _____ _____ *Signature*
_____ _____ _____

Loureiro Engineering Associates, Inc.

# FIELD SAMPLING RECORD
# MISCELLANEOUS SAMPLES

**LEA Comm. No.** **00100 .**
Project General Overhead
Location LEA, Plainville, CT
Client

Page _____ of _____
Date ___/___/___

| Sample ID | Location ID | Time | Sample Type | Depth (ft) | PID/FID Reading | Comments | Waste Cont. ID |
|---|---|---|---|---|---|---|---|
| | | | | | | | |
| | | | | | | | |
| | | | | | | | |
| | | | | | | | |
| | | | | | | | |
| | | | | | | | |
| | | | | | | | |
| | | | | | | | |
| | | | | | | | |
| | | | | | | | |
| | | | | | | | |
| | | | | | | | |
| | | | | | | | |
| | | | | | | | |
| | | | | | | | |
| | | | | | | | |
| | | | | | | | |
| | | | | | | | |
| | | | | | | | |
| | | | | | | | |
| | | | | | | | |

Field Personnel _____ _____ ***Signature***
_____ _____ _____

Loureiro Engineering Associates, Inc.

# FIELD SAMPLING RECORD
## LOW FLOW WELL SAMPLE

**LEA Comm. No.**
Project
Location
Client

Page ____ of ____
Date ___/___/___
Sample Time ___:___

Monitoring Well Number _____ Sample Number(s) 1213872

**Initial Field Data and Measurements**

Depth of Well _____ Reference Used _____
Depth to Water _____ PID/FID Reading _____
*Height of Column* _____ Interface Yes / No If yes, Depth _____ Lighter / Heavier

Well Casing Diameter _____ Material _____ General Condition OK Bad
Protector Road Box / Stickup
Ground to Reference _____
Comments _____

| | OK | Bad |
|---|---|---|
| Casing Secure | | |
| Collar Intact | | |
| Cover Locked | | |
| Other (describe) | | |

**Development Information**

| Parameter / Time | Depth to Water | Pump Setting | Purge Rate (mL/min) | Cum. Liters Purged (L) | Temp (C) | Spec. Cond. (uS/cm) | pH (SU) | ORP (Eh) | DO (mg/L) | Turbidity (NTU) | Comment |
|---|---|---|---|---|---|---|---|---|---|---|---|
| | | | | | | | | | | | |
| | | | | | | | | | | | |
| | | | | | | | | | | | |
| | | | | | | | | | | | |
| | | | | | | | | | | | |
| | | | | | | | | | | | |
| | | | | | | | | | | | |
| | | | | | | | | | | | |
| | | | | | | | | | | | |
| | | | | | | | | | | | |
| | | | | | | | | | | | |
| | | | | | | | | | | | |
| | | | | | | | | | | | |
| | | | | | | | | | | | |
| | | | | | | | | | | | |
| | | | | | | | | | | | |

Developement Method Peristaltic Pump / Bailer / Inertial Pump / Other _____

Sample Field Treatment *If any ambiguity could exist, be sure to indicate the field treatment applied to each sample aliquot with the appropriate suffix in the sample ID on both the sample bottle label and on the Chain of Custody!*

Field Decontamination? Yes / No If Yes, with what? _____
Waste Container ID _____

**Additional Comments**

Field Personnel _____ ***Signature***

Loureiro Engineering Associates, Inc.

# FIELD SAMPLING RECORD
# PERFORMANCE SAMPLE

| | | |
|---|---|---|
| **LEA Comm. No.** | **00100 .** | Page _____ of _____ |
| Project | General Overhead | Date ___/___/_____ |
| Location | LEA, Plainville, CT | |
| Client | | |

LEA Sample ID _____

LEA Sample ID _____

LEA Sample ID _____

LEA Sample ID _____

LEA Sample ID _____

LEA Sample ID _____

Field Personnel _____ _____ ***Signature***

_____ _____ _____

West Sacramento
880 Riverside Parkway

West Sacramento, CA 95605
phone 916.374.4378 fax 916.372.1059

# Chain of Custody Record

TestAmerica
THE LEADER IN ENVIRONMENTAL TESTING

TestAmerica Laboratories, Inc.

| Client Contact | Project Manager: | Site Contact: | Date: | COC No: |
|---|---|---|---|---|
| Your Company Name here | Tel/Fax: | Lab Contact: | Carrier: | _____ of _____ COCs |
| Address | Analysis Turnaround Time | | | Job No. |
| City/State/Zip | Calendar ( C ) or Work Days (W) _____ | | | |
| (xxx) xxx-xxxx Phone | TAT if different from Below _____ | | | |
| (xxx) xxx-xxxx FAX | ☐ 2 weeks | | | SDG No. |
| Project Name: | ☐ 1 week | | | |
| Site: | ☐ 2 days | | | |
| P O # | ☐ 1 day | | | |

| Sample Identification | Sample Date | Sample Time | Sample Type | Matrix | # of Cont. | Filtered Sample | | | | | | | | | | | | | | | | Sample Specific Notes: |
|---|---|---|---|---|---|---|---|---|---|---|---|---|---|---|---|---|---|---|---|---|---|---|
| | | | | | | | | | | | | | | | | | | | | | | |
| | | | | | | | | | | | | | | | | | | | | | | |
| | | | | | | | | | | | | | | | | | | | | | | |
| | | | | | | | | | | | | | | | | | | | | | | |
| | | | | | | | | | | | | | | | | | | | | | | |
| | | | | | | | | | | | | | | | | | | | | | | |
| | | | | | | | | | | | | | | | | | | | | | | |
| | | | | | | | | | | | | | | | | | | | | | | |
| | | | | | | | | | | | | | | | | | | | | | | |
| | | | | | | | | | | | | | | | | | | | | | | |
| | | | | | | | | | | | | | | | | | | | | | | |
| | | | | | | | | | | | | | | | | | | | | | | |

**Preservation Used: 1= Ice, 2= HCl; 3= H2SO4; 4=HNO3; 5=NaOH; 6= Other _____**

***Possible Hazard Identification***

☐ *Non-Hazard* ☐ *Flammable* ☐ *Skin Irritant* *Poison B* ☐ *Unknown* ☐

***Sample Disposal ( A fee may be assessed if samples are retained longer than 1 month)***

☐ *Return To Client* ☐ *Disposal By Lab* ☐ *Archive For _____ Months*

**Special Instructions/QC Requirements & Comments:**

| Relinquished by: | Company: | Date/Time: | Received by: | Company: | Date/Time: |
|---|---|---|---|---|---|
| Relinquished by: | Company: | Date/Time: | Received by: | Company: | Date/Time: |
| Relinquished by: | Company: | Date/Time: | Received by: | Company: | Date/Time: |

**Figure J-2 Example Sample Label**

Sample ID 1320596
0000100.001
LEA
Physical Analyses
Date:___/___/___ Time:___:___
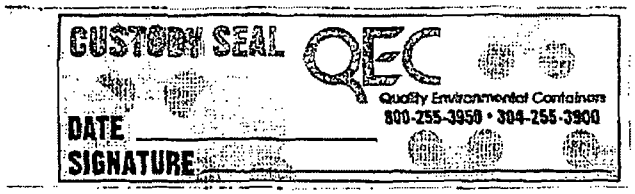
**Figure J-3 Example Sample Custody Seal**