Superfund Records Center
SITE: Centredale
BREAK: 3.7
OTHER: 285156

SDMS DocID 285156

Loureiro Engineering Associates, Inc.

January 7, 2008

United States Environmental Protection Agency
Region 1 - New England Regional Office
One Congress Street, Suite 1100 (HBO)
Boston, Massachusetts 02114-2023

Attn: Anna Krasko, Project Manager

RE: Response to Comments
November 13, 2007 Monitoring Well Installation Work Plan
Centredale Manor Restoration Project Superfund Site
North Providence, Rhode Island

Dear Ms. Krasko:

On November 13, 2007, Loureiro Engineering Associates, Inc. (LEA) submitted a Work Plan, on behalf of Emhart Industries, Inc. (Emhart), to obtain empirical data in assessing whether or not there is an ongoing source of dioxin discharging to the Woonasquatucket River from the area of monitoring well MW-05S at the Centredale Manor Restoration Project Superfund Site located in North Providence, Rhode Island. On November 21, 2007, the United States Environmental Protection Agency (EPA) provided written comments to the Work Plan through email correspondence. On behalf of Emhart, LEA is providing this correspondence to address these comments.

EPA's comments are provided in Attachment 1 to this letter. To facilitate your review of the information presented in Attachment 1, each comment is presented in italicized text, followed by the corresponding response.

A copy of the Work Plan, revised to reflect the responses to EPA's comments is provided as Attachment 2. Supporting documents, including LEA's standard operating procedures (SOPs) and the analyzing laboratory's SOPs and Quality Assurance Manual are provided as Attachments to the Work Plan.

We trust that the information provided in the attachments adequately addresses your comments. We look forward to receiving your approval of the revised Work Plan so that the data may be collected quickly. Should you have any questions or additional comments, please feel free to contact me at (860) 747-6181.

Sincerely,

LOUREIRO ENGINEERING ASSOCIATES, INC.

David N. Scotti, P.G.
Project Manager

Copy to: Eve Vaudo (EPA)
Deirdre Dahlen (Battelle)
Louis Maccarone (RIDEM)
Jerry Muys, Esq.
Jeffrey Karp, Esq.
Laura Ford Brust, Esq.
Russell Keenan (AMEC)
Patrick Gwinn (AMEC)

ATTACHMENT 1

Response to Comments

ATTACHMENT 1

Response to Comments
November 13, 2007 Monitoring Well Installation Work Plan
Centredale Manor Restoration Project Superfund Site
North Providence, Rhode Island

1. *EPA recommends placing an additional monitoring well between MW-05S and the row of new wells to better define the potentially impacted area.*

   The objective of installing the proposed monitoring wells is to collect empirical data to assess whether or not there is an ongoing source of dioxin discharging to the Woonasquatucket River from the area of monitoring well MW-05S. Although the objective is not to delineate the potentially impacted area, the data obtained from the proposed sampling effort will provide information to further define this area. The proposed monitoring wells will be installed as close to the Woonasquatucket River as possible. The proposed monitoring well to be installed directly west of monitoring well MW-05S will be placed approximately 12 feet west of MW-05S at the top of the river embankment. This location is approximately 12 to 15 feet from the toe of the embankment and the Woonasquatucket River. One monitoring well will be installed approximately 30 feet north of this location (approximately 33 feet northwest of monitoring well MW-05S), and one monitoring well will be installed approximately 30 feet south of this well location (approximately 33 feet southwest of monitoring well MW-05S). Given the stated objective and the close proximity of the proposed wells to monitoring well MW-05S, the placement of another well between monitoring well MW-05S and the proposed wells is not justified.

2. *Provide specifications of the pre-packed screen and casing (e.g., filter pack sand and screen sizes).*

   The monitoring well specifications, including screen size, filter pack material, and casing size, are as follows:
   - 5-foot length of schedule-40, 2-inch diameter (3.63-inch outside diameter), 12-slot (0.012-inch slot), VEE-PACK™, polyvinyl chloride (PVC) pre-packed screen
   - filter pack to consist of 20/40 mesh sand (factory-packed – pre-pack)
   - 10-foot length of schedule-40, 2-inch diameter, thread couple, PVC riser
   - PVC end-plug (bottom plug)
   - 2-inch diameter expansion plug (top cap)

   The boring of each proposed monitoring well will be advanced to a depth of 12 feet below the ground surface (bgs). Each monitoring well will be screened from 7 to 12 feet bgs to ensure that the screen intervals correspond to that of monitoring well MW-05S (7 to 12 feet bgs),. The bottom of the 5-foot length of screen will be fitted with a PVC end-plug. The

filter pack will be brought up to a depth of 6 feet bgs from the bottom of the well. A bentonite seal having a minimum thickness of 1-foot will be placed in the annular space above the filter pack of each well. The remaining annular space of each well will be grouted with a cement-bentonite slurry mixture. The top of the PVC riser will be secured with a 2-inch expansion plug. Each well will be completed approximately 2 feet above the ground surface within a four-inch diameter steel protective casing that is secured with a lock.

3. *Include explanation how PID screening will be used to make field decisions (including location of monitoring wells, screen intervals, and soil/groundwater testing).*

   Field photoionization detector (PID) screening data will be recorded on the geologic boring log as part of the description of the subsurface materials encountered during the advancement of the soil borings. The data may be used in the selection of soil samples to be analyzed by the laboratory, if any (see response to Comment #6, below). The data will also be used in the evaluation of all laboratory analytical results. The field PID screening data will not be used to locate monitoring wells or to select screen intervals. The monitoring wells will be located as discussed in response to Comment #1, above. Monitoring well screen intervals will correspond to that of monitoring well MW-05S, as discussed in response to Comment #2, above.

4. *Include the well screen length and placement depth with rational. To be consistent with MW-05S, new wells should have 5' screens.*

   Each monitoring well will be screened from 7 to 12 feet bgs to ensure that the screen intervals correspond to that of monitoring well MW-05S (7 to 12 feet bgs),. Each monitoring well will be constructed with a 5-foot length of schedule-40, 2-inch diameter (3.63-inch outside diameter), 12-slot (0.012-inch slot), VEE-PACK™, PVC pre-packed screen.

5. *Explain how LEA will determine whether groundwater or river water is being drawn into the proposed monitoring wells located adjacent to the river and how that would affect interpretation of data.*

   Groundwater samples will be collected using low-flow groundwater sampling techniques in accordance with LEA's *Standard Operating Procedure for Low Flow (Low Stress) Liquid Sample Collection and Field Analysis* (Attachment 2 of the Work Plan). In accordance with this SOP, the monitoring wells will be purged at an approximate rate of 100 milliliters per minute (ml/min). The flow rate will be lowered if necessary and possible to ensure that drawdown within the well does not exceed 0.3 feet in collecting a representative sample of the groundwater. The flow rates at which the monitoring wells are to be purged and sampled are not sufficient to influence the groundwater flow conditions closer to the river if groundwater is discharging to the west of monitoring well MW-05S.

6. *Similar to previous data collection efforts, EPA recommends collecting and testing paired soil samples at distinct depth intervals for physical (particle size, moisture content) and chemical (VOCs, dioxin/furans) in at least one location. These soil samples can be archived and testing decisions could be made following receipt of groundwater sampling results.*

   For the soil boring to be located directly west of monitoring well MW-05S, soil samples will be collected at 2-foot intervals from the ground surface to the bottom of the boring and will be submitted to the analyzing laboratories under proper chain-of-custody documentation with a request that the samples be placed "on hold." Paired samples will be collected and submitted to LEA's geotechnical laboratory for grain size distribution and to DAT, Inc. for moisture content and chemical analysis (dioxins). Soil samples will not be collected and placed "on hold" for the possible analysis of VOCs, as the groundwater results will not be obtained until after the soil sample holding time for VOC analysis expires. A decision to analyze the soil samples will be made following receipt and evaluation of the laboratory analytical results for the groundwater samples. Should it be advantageous to analyze the soil samples, PID screening data and visual observations recorded on the soil boring logs will be used to determine which samples undergo laboratory analysis.

7. *Consider how well development procedures will account for potential disruption of dioxin chemical equilibria in-situ and how the level of well development will be documented in field notes to ensure that the level of disruption is replicated across wells.*

   Each new monitoring well and monitoring well MW-05S will be developed in accordance with LEA's *Standard Operating Procedure for Installing and Developing Monitoring Wells and Piezometers* (Attachment 1 of the Work Plan). The use of this SOP ensures that any differences in the level of disruption to dioxin chemical equilibria are minimized. During the well development process, the level of well development will be documented by recording the pH, temperature, specific conductance, and turbidity of the groundwater purged from the monitoring wells. These parameters will be measured and recorded at periodic intervals (but at least every well-volume) until the purged groundwater appears to be clear and the parameters stabilize. The groundwater parameters may be considered to be stable when: (i) the pH, temperature, specific conductance, and turbidity of consecutive measurements have relative percent differences (RPD) of less than 10%; and (ii) the turbidity is less than 50 nephalometric turbidity units (NTUs). In the event that the measured groundwater parameters do not stabilize, well development will be terminated once the monitoring well has been developed for 2.5 hours.

8. *Provide Standard Operating Procedures (SOPs) for soil boring, monitoring well installation, and well development.*

   LEA's SOPs for Hollow Stem Auger Soil Borings, Installing and Developing Monitoring Wells and Piezometers, and Low Flow (Low Stress) Liquid Sample Collection and Field Analysis are attached to the Work Plan provided as Attachment 2.

9. *Include groundwater level measurements at piezometers near well MW-05S, i.e., P2, P3, and P20. EPA recommends also measuring the surface water elevation in the river near well MW-05S, concurrent with groundwater level measurements.*

   Depth-to-water will be measured at each newly installed well and at existing nearby monitoring wells GEC-2, GEC-3, GEC-4, GEC-5, GEC-6, GEC-7, MW-05S, MW-6, MW-14M, and MW-15D, and piezometers P-2, P-3, and P-20. In addition, the surface water elevation in the river near monitoring well MW-05S will be measured.

10. *Consider the amount of time to be passed between well development and sampling.*

    The monitoring well sampling event will be conducted no sooner than two weeks following the development of the monitoring wells.

11. *Provide an SOP for the proposed low flow sampling procedures (including, apparatus; flow volume; placement depth, etc.).*

    LEA's SOP for Low Flow Sampling is attached to the Work Plan provided as Attachment 2.

12. *Existing monitoring wells at the site have 2" diameter – it would be preferable to have the direct push wells also with 2" diameter (are these available instead of 1.5"?).*

    The monitoring wells will be constructed using 2-inch diameter well screen and riser.

13. *Recommend that existing MW-05S also be sampled for comparison and consistency. Without such sampling, comparison with existing data could be difficult to interpret.*

    Filtered and unfiltered groundwater samples will be collected from monitoring well MW-05S, as well as from the proposed monitoring wells. The filtered and unfiltered groundwater samples will be analyzed for dioxins/furans using USEPA Method 8290 and for total dissolved solids (TDS) using USEPA Method 160.1. The unfiltered groundwater samples will be analyzed for VOCs using EPA Method 8260B and for total suspended solids (TSS) using USEPA Method 160.2.

14. *To be consistent with previous investigations and due to the proximity to the river, it is recommended that the new wells be sampled during low to average flow conditions.*

    The monitoring wells will be sampled during low to average flow conditions.

15. *Specify what field parameters will be measured. Indicate whether total dissolved solids (TDS) would be included.*

    While the monitoring wells are purged during the low flow (low stress) sampling process, groundwater measurements of pH, temperature, specific conductance, oxidation-reduction potential, dissolved oxygen, and turbidity will be recorded. Measurements of TDS will not

be made in the field. The groundwater samples will be analyzed by Averill Environmental Laboratory, Inc. of Plainville, Connecticut (AEL) for TDS.

16. *Specify whether total suspended solids (TSS) to be measured.*

    Measurements of TSS will not be made in the field. The groundwater samples will be analyzed by AEL for TSS.

17. *Specify what volume of groundwater will be collected for VOC and dioxin/furan analyses.*

    For each groundwater sample to be analyzed for VOCs, three 40-milliliter vials will be collected. For each groundwater sample to be analyzed for dioxins/furans, two one-liter amber glass bottles will be collected.

18. *It is recommended that filtering be conducted at the fixed laboratory, not in the field. Specify the size filter to be used.*

    Both filtered and unfiltered groundwater samples will be collected for the analysis of dioxins/furans. The groundwater samples will be filtered in the field using in-line, 0.45 micron filters. The objective of field-filtering is to assess truly dissolved concentrations of dioxins/furans. If filtering is conducted at the laboratory, then the dioxins/furan equilibria may be disturbed between the time of sample collection and the time of filtering.

19. *Clarify whether the EPA Method 8260B include a full list of VOCs including acetone?*

    The full list of VOCs is included in DAT, Inc.'s SOP for the Determination of Volatile Organic Compounds by GC/MS Method 8260B attached to the Work Plan. This list includes acetone.

20. *Clarify QA/QC samples, i.e., include matrix spike/matrix spike duplicates in addition to the ones already listed.*

    Quality assurance/quality control (QA/QC) samples will include the analysis of trip blank (VOCs only), equipment blank, field duplicate, project-specific matrix-spike and matrix-spike duplicate, and performance evaluation samples.

21. *Provide fixed laboratory SOPs for the analysis to be performed, including the laboratory detection limits in water. How much experience does the fixed laboratory (DAT, Inc.) have conducting low-level dioxin/furan analyses? The 'dioxin capability' is listed under the 'What's New' section of the Data, Inc. Website.*

    The DAT, Inc. SOPs for the analysis of VOCs and dioxins/furans are attached to the Work Plan. A copy of the DAT, Inc. Quality Assurance Manual is also attached to the Work Plan and includes a qualifications summary of key laboratory personnel.

22. *Specify what Tier level validation will be performed for the dioxin/furan and VOC data. To be comparable with existing data, Tier III will need to be performed for dioxin/furan and Tier II for non-dioxin data (e.g., VOCs).*

    Tier III level validation will be performed for the dioxin/furan data and Tier II level validation will for performed for the VOC, TDS, and TSS data.

23. *Clarify if you expect EPA to conduct third party validation of dioxin/furan data? This would be consistent with previous investigations.*

    EPA is welcome to conduct third-party validation of dioxin/furan data, however the work plan does not require that EPA perform laboratory data validation.

ATTACHMENT 2

Monitoring Well Installation Work Plan

ATTACHMENT 2

Monitoring Well Installation Work Plan
Centredale Manor Restoration Project Superfund Site
North Providence, Rhode Island

1. Monitoring Well Installation

Three monitoring wells are proposed to be installed along the east embankment of the Woonasquatucket River. The proposed locations of the monitoring wells are illustrated in the attached drawing (Drawing 1). As shown in this drawing, the wells are proposed to be located adjacent to the USGS vapor-to-water diffusion sample locations for which the highest concentrations of TCE and PCE were reported (VS-012, VS-013, VS-014, VSW-015, and VS-016). As proposed, one monitoring well will be located approximately twelve feet west of monitoring well MW-05S. This well will be located as close to the eastern edge of the Woonasquatucket River as possible. One, monitoring well will be installed approximately 30 feet north of this location (approximately 33 feet northwest of monitoring well MW-05S), and one monitoring well will be installed approximately 30 feet south of this well location (approximately 33 feet southwest of monitoring well MW-05S).

The monitoring wells will be installed to a depth of approximately twelve feet below the ground surface, consistent with the depth to which monitoring well MW-05S was installed. The wells are proposed to be installed using hollow-stem auger drilling techniques in accordance with LEA's *Standard Operating Procedure for Installing and Developing Monitoring Wells and Piezometers* (Attachment 1). Using these techniques, one soil boring will be advanced to approximately twelve feet below the ground surface at each monitoring well location. During the advancement of the soil borings, soil samples will be collected using a three-inch diameter split-spoon sampler. The samples will be collected at two-foot intervals from the ground surface to the bottom of the boring to characterize the nature of the subsurface materials. A field geologist will visually examine each two-foot sample and will screen the soil for the presence of volatile organic compounds using a photoionization detector (PID). A description of the subsurface materials that are encountered will be recorded on a geologic boring log. Each description will include the identification of fill material and/or contamination based on PID readings and visual and olfactory observation.

The soil samples collected from the boring advanced directly west of monitoring well MW-05S will be submitted to the analyzing laboratories with a request that the samples be placed "On Hold". Quality control/quality assurance (QA/QC) measures that will be implemented during the soil sampling process will include the collection of equipment blank, field duplicate, project-specific matrix-spike/matrix-spike duplicate, and performance evaluation samples. The soil and QA/QC samples will be submitted to DAT, Inc. of Plain City, Ohio. The DAT, Inc. Standard Operating Procedures for the analysis of VOCs and dioxins/furans are provided in Attachment 2.

A copy of the DAT, Inc. Quality Assurance Manual is also provided in Attachment 2 and includes a qualifications summary of key laboratory personnel.

Paired samples will be collected from the boring advanced directly west of monitoring well MW-05S and will be submitted to LEA's geotechnical laboratory with a request that the samples be placed "On Hold." A request to release select samples from "Hold" and to analyze the samples for dioxins/furans using USEPA Method 8290 may be submitted to DAT, Inc. based on PID readings, visual inspection of the subsurface materials, and the results of the groundwater samples that are collected from the monitoring wells. If it is decided that soil samples are to be analyzed for dioxins/furans, then a request may also be made to analyze the paired samples submitted to LEA's geotechnical laboratory for grain size distribution.

Each monitoring well will be screened from 7 to 12 feet below the ground surface (bgs) to ensure that the screen intervals correspond to that of monitoring well MW-05S (7 to 12 feet bgs). The monitoring well specifications, including screen size, filter pack material, and casing size, are proposed as follows:

- 5-foot length of schedule-40, 2-inch diameter (3.63-inch outside diameter), 12-slot (0.012-inch slot), VEE-PACK™, polyvinyl chloride (PVC) pre-packed screen
- filter pack to consist of 20/40 mesh sand (factory-packed – pre-pack)
- 10-foot length of schedule-40, 2-inch diameter, thread couple, PVC riser
- PVC end-plug (bottom plug)
- 2-inch diameter expansion plug (top cap

The bottom of the 5-foot length of screen will be fitted with a PVC end-plug. The filter pack will be brought up to a depth of 6 feet bgs from the bottom of the well. A bentonite seal having a minimum thickness of 1-foot will be placed in the annular space above the filter pack of each well. The remaining annular space of each well will be grouted with a cement-bentonite slurry mixture. The top of the PVC riser will be secured with a 2-inch expansion plug. Each well will be completed approximately 2 feet above the ground surface within a four-inch diameter steel protective casing that is secured with a lock. The protective casing will extend approximately 24 inches above the ground.

2. Monitoring Well Development

Using surge and over-pumping techniques, each proposed monitoring well and monitoring well MW-05S will be properly developed in accordance with LEA's *Standard Operating Procedure for Installing and Developing Monitoring Wells and Piezometers* (Attachment 1). The newly installed wells will be developed no sooner than 24 hours after the construction of the well. Developing the monitoring wells will remove fine-grained sediments (fines) from the vicinity of the well screen and will enable groundwater to flow freely from the formation into the well. Developing the monitoring wells will reduce the turbidity of the groundwater during sampling.

3. Monitoring Well Survey

The locations of the newly installed monitoring wells will be surveyed relative to the existing site features and existing monitoring wells. The elevation of the top of PVC casing of each monitoring well will also be surveyed relative to the existing datum and monitoring well network. The survey data will be used to evaluate the general direction of groundwater flow beneath this area of the site.

4. Monitoring Well Sampling

One monitoring well sampling event will be performed no sooner than two weeks following the development of the monitoring wells and during average river flows. At the on-set of the monitoring well sampling event, depth-to-water will be measured at each newly installed well and at existing nearby monitoring wells GEC-2, GEC-3, GEC-4, GEC-5, GEC-6, GEC-7, MW-05S, MW-6, MW-14M, and MW-15D and piezometers P-2, P-3, and P-30. In addition, the surface water elevation in the river near monitoring well MW-05S will be measured.

Using the procedures described in LEA's *Standard Operating Procedure for Low Flow (Low Stress) Liquid Sample Collection and Field Analysis* (Attachment 1), one field-filtered and one unfiltered groundwater sample will be collected from each newly installed well and from monitoring well MW-05S for laboratory analysis. The groundwater samples will be filtered in the field using in-line, 0.45 micron filters. During the groundwater sampling event, the QA/QC measures that will be implemented will include the analysis of trip blank, equipment blank, field duplicate, project-specific matrix-spike/matrix-spike duplicate, and performance evaluation samples.

For each groundwater sample to be analyzed for dioxins/furans, two one-liter amber glass bottles will be collected; for each groundwater sample to be analyzed for VOCs, three 40-milliliter vials will be collected; and for each groundwater sample to be analyzed for TDS and TSS, two 500-milliliter plastic bottles will be collected.

The unfiltered groundwater samples will be analyzed for dioxins/furans using USEPA Method 8290 and for total dissolved solids (TDS) using EPA Method 160.1. A decision to analyze the filtered groundwater samples for these parameters may be made following receipt of the results for the unfiltered groundwater samples. Also, unfiltered groundwater samples will be analyzed for VOCs using EPA Method 8260B and for total suspended solids (TSS) using EPA Method 160.2. QA/QC samples will be analyzed for dioxins/furans by Method 8290, VOCs by Method 8260B, TDS by Method 160.1, and TSS by EPA Method 160.2. The samples to be analyzed for dioxins/furans and VOCs will be performed by DAT, Inc. The samples to be analyzed for TDS and TSS will be analyzed by Averill Environmental Laboratory, Inc. of Plainville, Connecticut.

5. Waste Management of Investigation-Derived Waste

During the course of the investigation, soil and groundwater requiring containerization will be brought to the surface. Additionally, water containing detergents will also be generated during

decontamination of sampling equipment. LEA field personnel will ensure that the material is properly containerized and initially labeled as soil drill cuttings, monitoring well purge water, or decontamination water (as appropriate), with date of containerization and identification as to the location from which the material was derived. The containerized materials will be sampled and analyzed to properly characterize the investigation-derived waste for disposal at an off-site permitted facility.

6. Data Evaluation and Reporting

Once the laboratory results are obtained, they will be validated by a third-party validator, Environmental Standards of Valley Forge, Pennsylvania (ES). Tier III level validation will be performed for the dioxin/furan data and Tier II level validation will for performed for the VOC data. The TDS and TSS data will be validated by checking the calculations performed in reporting the concentrations present in the samples. The validated data will be evaluated relative to data previously obtained by EPA for this area of the site. A letter report will be prepared that describes the investigation activities conducted at the site. The report will be used to present the findings and groundwater data obtained and will include tables, figures, and drawings to illustrate the current understanding of the site conditions.

TMW-1
TMW-2
TMW-3
TMW-4
MW-1
MW-2
MW-3
MW-4
MW-5S
MW-6
MW-14M
MW-15D
GEC-2
GEC-3
GEC-4
GEC-5
GEC-6
GEC-7
P-2
P-3
P-20
VS-006
VS-007
VS-008
VS-009
VS-010
VS-011
VS-012
VS-013
VS-014
VS-015
VS-016
VS-017
VS-018
VS-019
VS-020
VS-021
VS-022
VS-023
VS-024
VS-025
VS-026
VS-027
CAP NORTH
CAP N
SMH
RIM=104.1
FORCED MAIN
PIPE AT 98.8
SMH
RIM=104.3
INV=101.8
8"VC
ELEC
HH
"BROOK VILLAGE"
SPRINKLER
CONNECTION
SHED
UNDERGROUND
FUEL TANK
TREE
BENCH
SWALE
TELE
HH
4' CEDAR PICKET
CEDAR PICKET
3/4" STONE
RIPRAP
INV=95.6
N. PROVIDENCE
JOHNSTON
UP681
UP
UP680
UP682
UP683
RIM=101.1
RIM=103.9
RIM=101.0
RIM=102.0
RIM=101.1
PROPOSED MONITORING WELL LOCATIONS

SCALE IN FEET
10 0 10 20 30

LEGEND

- EXISTING MONITORING WELL
- EXISTING VAPOR PROBE
- EXISTING PIEZOMETER
- PROPOSED MONITORING WELL
- EXISTING LIGHT POLE
- UP680 EXISTING UTILITY POLE
- EXISTING STORM SEWER
- ELEC HH EXISTING ELECTICAL BOX
- TRANS EXISTING TRANSFORMER
- EXISTING TREE

REV.	DESCRIPTION OF REVISION	DATE	APPR.

Loureiro Engineering Associates, Inc.
100 Northwest Drive • Plainville, Connecticut 06062
An Employee Owned Company

SCALE 1" = 20'
PROJECT NO. 15RP901
DATE 12/27/07
DRAWN BY A.C.L.
DATE 12/27/07
APP. BY D.N.S.

CENTREDALE MANOR RESTORATION PROJECT SUPERFUND SITE
NORTH PROVIDENCE, RHODE ISLAND

PROPOSED MONITORING WELL LOCATIONS

An Employee Owned Company

DRAWING 1
SHEET NO. 1 NO. OF SHEETS 1

G:\Autocad\PROJECTS\15RP901\CONCEPTS-SENT\15RP901-SITE-MWS.dwg, Layout1 (2), 12/27/2007 11:32:21 AM

ATTACHMENT 1

Loureiro Engineering Associates, Inc.

Standard Operating Procedures

Loureiro Engineering Associates, Inc.
Standard Operating Procedure
For
Hollow Stem Auger Soil Borings

SOP ID: 10008
Date Initiated: 02/20/94
Revision No. 007: 12/31/01

Approved By: *<u>/s/ Kimberly M. Clarke</u>* *<u>12/19/01</u>*
Kimberly M. Clarke **Date**
Senior Project Scientist

<u>/s/ Nick D. Skoularikis</u> *<u>12/19/01</u>*
Nick D. Skoularikis **Date**
Director Of Quality

REVISION RECORD

Rev #	Date	Additions/Deletions/Modifications
Initial Issue	02/20/94	Initial Issue
001-004	NR	No record.
005	06/13/97	No record.
006	07/29/00	Changes to SOP format and new company logo.
007	12/31/01	Revisions throughout. Revised to conform to new SOP format.

Loureiro Engineering Associates, Inc.
Standard Operating Procedure
For
Hollow Stem Auger Soil Borings

1. Purpose and Scope

This section discusses procedures for conducting soil borings either for exploration or for the installation of monitoring wells. The Loureiro Engineering Associates, Inc. (LEA) representative should be aware that the drillers are responsible for the operation and safety of the drilling rig itself, but should ensure that proper procedures are used with respect to sampling and cleaning of equipment. This document was prepared in accordance with method American Society of Testing Materials (ASTM) D 1452-80. Soil sampling for chemical analysis is covered under LEA *SOP for Soil Sampling* (SOP ID 10006).

2. Definitions

2.1. None

3. Equipment

3.1. Equipment supplied by LEA that is required for conducting hollow stem auger borings includes:

- Spatula.
- Distilled water.
- Hand towels.
- Portable VOC analyzer (such as Photovac MicroTIP® or equivalent).
- Polyethylene plastic sheeting.
- Sample collection jars.
- Clean disposable gloves.
- Field documentation.
- Indelible marker.
- Three 5-gallon buckets.
- Non-phosphate detergent, methanol (less than 10 percent solution), 10

percent nitric acid solution, hexane, distilled water.

- Cooler and cold packs.
- Graduated cylinder.
- Analytical balance (accurate to 0.1 gram).
- 500-ml disposable beakers.
- EPA Volatile Organic Analysis (VOA) vial (40 ml).
- Field forms.
- Custody seals and sample labels.
- Field paperwork.
- Decontamination brushes.
- Personal protective equipment.
- Clipboard.
- 100 foot measuring tape.
- Re-sealable plastic bags.
- Chain of custody forms.

3.2. Drilling Rig

Unless otherwise specified, all soil borings will be conducted using hollow stem auger equipment powered by an appropriate rig. It is the responsibility of the LEA representative to inform the driller prior to entering the site as to the probable depth of borings; probable materials, if known; and desired size of boring. It is the responsibility of the driller to provide the appropriate rig and augers in good working order considering the above factors.

3.3. Water

3.3.1. Water is occasionally required to maintain the stability of the boring. If water is used, the source(s), quality, and volume(s) will be recorded in the drilling log.

3.3.2. No other drilling fluid or compressed air may be used without specific authorization from the project manager.

3.4. Central Auger Opening Plug

In order to maintain clean, accurate samples, no hollow stem auger drilling may be conducted without the use of the central plug bit. The driller must be aware of this prior to entering the site.

4. Procedure

4.1. Utilities

4.1.1. Notify the appropriate "one call" utility notification service (e.g., Call Before You Dig in Connecticut at 1-800-922-4455) at least three working days prior to commencing operations on a site. The locations of all proposed borings must be clearly marked in the field prior to notification. The Project Engineer/Manager **must** call and confirm that each utility has been to the site and has marked their respective lines.

4.1.2. On private sites, consult with the owner or other person knowledgeable about the site as to locations of potential private or abandoned utilities and locate these prior to beginning work. Upon the discretion of the project manager, a pipe locator can also be used to assist in locating utilities.

4.1.3. Note that OSHA may have additional requirements for location of utilities.

4.1.4. All efforts to locate (including names of owner or designee and time) underground utilities should be properly documented in the field logbook prior to onset of the work scheduled.

4.2. OSHA

The Foreman or Supervisor of the drilling crew shall be the Competent Person as required by OSHA for all of their work. However, this does not relieve the other LEA representatives from bringing to his or her attention conditions which may be unsafe or present a hazard to the drilling crew, the general public, or other workers on the site. The LEA representatives will be responsible for ensuring that LEA activities are performed in accordance with the site-specific Health & Safety Plan.

4.3. Public Health

Since drilling equipment may be used elsewhere to construct other types of wells, including wells for private water supplies, all equipment, including the rig,

augers, and tools must be thoroughly decontaminated prior to leaving the site. On sites with known contamination, testing may be required to confirm adequacy of cleaning.

4.4. VOC Monitoring

4.4.1. A portable volatile organic compound (VOC) analyzer shall be available on site and shall be used to screen all cuttings and fluids (if any) removed from the hole.

4.4.2. Since, in general, it cannot be presumed that a site is clean, all cuttings and/or fluids that show a reading on the VOC analyzer above background shall be containerized or drummed, as appropriate, on the site. The cuttings and fluids should also be containerized when the presence of other contaminants is suspected. Section 4.12 provides additional information on management of potentially contaminated fluids and materials.

4.5. Site Preparation

4.5.1. A sufficient area shall be cordoned off to restrict access to the work area. This area shall be termed an "Exclusion Zone".

4.5.2. An equipment decontamination area shall be assembled, as described in Section 4.8, within the exclusion zone.

4.5.3. All personal protective equipment shall be donned.

4.5.4. The representative of LEA will bring to the attention of the rig operator the requirements of sampling, health and safety, utility restrictions, decontamination procedures, and well construction specifications.

4.6. Rig Operation

4.6.1. Rig operation is the responsibility of the drilling crew foreman or supervisor.

4.6.2. The rig should be inspected upon arrival on-site to ensure: that it is in good working order; that all required equipment and supplies are present; and that the rig is free of loose debris, oil leaks, or defective equipment. Only when the representative of LEA is satisfied that these requirements have been met will the drilling crew be allowed to decontaminate the rig and begin work.

4.6.3. The rig operator must demonstrate operation and effectiveness of the kill switch on the drill rig prior to initiating drilling activities.

4.7. Decontamination

4.7.1. Prior to conducting a boring, the LEA representative will ensure that all necessary equipment is clean and decontaminated, including the rig, all augers and bits, samplers, brushes, and any other tools or equipment. Decontamination procedures may vary slightly from those presented below, dependent upon the particular types of contaminants encountered.

4.7.2. A section of 5 mil (minimum) plastic sheeting shall be cut of sufficient size to underlie the decontamination area to contain any discharge of decontamination solutions.

4.7.3. The following solutions (as appropriate for the anticipated contaminants) shall be prepared and placed in 500-ml laboratory squirt bottles:

- Less than 10 percent methanol solution.
- Ten percent nitric acid solution.
- 100 percent hexane solution.
- Distilled deionized (DI) water.

4.7.4. A fifth solution of phosphate-free detergent and tap water (approximately 2.5 gallons) shall be prepared in a five-gallon bucket.

4.7.5. All loose debris shall be removed from the augers and spatulas into an empty five-gallon bucket or plastic sheeting using a stiff bristled brush.

4.7.6. The order of decontamination solutions is as follows:

- Detergent scrub.
- DI water rinse.
- Hexane rinse (to be used only if separate-phase petroleum product, other than gasoline, is present).
- DI water rinse.

- 10 percent nitric acid rinse (to be used only when metals are suspected as potential contaminants).
- DI water rinse.
- Methanol rinse (less than 10 percent solution).
- Air dry.

4.7.7. Wrap each piece of decontaminated sampling equipment in aluminum foil to maintain cleanliness.

4.7.8. An alternative to the procedure described above requires that the equipment be cleaned using high-pressure wash and steam cleaning. Alternative methods of cleaning may be more appropriate for an individual piece of equipment based upon knowledge of site contaminants, and may be used at the discretion of the LEA representative. Section 4.12 provides additional information on management of potentially contaminated fluids and materials in an area constructed to contain spent decontamination fluid and debris (plastic sheeting bermed with timber is usually sufficient).

4.7.9. At the end of the project day, all used equipment shall be decontaminated. All spent decontamination solutions will be handled and disposed of in accordance with all applicable municipal, state and federal regulations.

4.8. Sampling

4.8.1. All shallow soil sampling, unless otherwise specified by the site-specific work plan, shall be conducted using a split spoon (or similar) sampling device operating through hollow stem augers.

4.8.2. The hollow stem augers and central auger plug shall be advanced to the depth of the sampling interval.

4.8.3. After removing the central auger plug, the split spoon sampler will be lowered into the augers. It will then be driven 18 to 24 inches into the soil using a 140-pound hammer with a fall of three feet. A heavier hammer may be used in exceptionally dense materials provided its use is recorded in the boring log. The driller and the LEA representative will count and record the blows for each six-inch increment.

4.8.4. The split spoon shall be opened and immediately scanned using a VOC analyzer and following the approach described in Section 4.9, Field Analysis.

4.8.5. The LEA representative will record on the boring log as a minimum: description of the material in the sampler, blow counts, depth, VOC analyzer reading, material gradation using the Burmister system, color, moisture, and density.

4.8.6. Prior to reuse, the sampling device shall be decontaminated using the procedures described in Section 4.7, Decontamination.

4.8.7. Soil samples collected for archive purposes shall be placed into soil jars and labeled with the sample number, date, time, and LEA commission number.

4.8.8. The procedures for collection of soil samples for chemical analysis are described in *LEA's SOP for Soil Sampling* (SOP ID 10006).

4.9. Field Analysis

4.9.1. The portable VOC analyzer shall be either a Photovac MicroTIP® equipped with a photoionization detector (PID) or a Foxboro OVA® equipped with a flame ionization detector (FID) or equivalent and calibrated in accordance with the instructions provided with each piece of equipment. Calibration shall be performed prior to each sampling event and checked after each day of sampling.

4.9.2. The following procedure shall be used to obtain readings of the VOCs present in a soil sample:

- Obtain an aliquot of soil (approximately 50 grams) from the split spoon, place it into a re-sealable plastic bag, and seal it.
- Lightly agitate the sample, assuring that all soil aggregates are broken, for two minutes.
- Carefully break the seal of the bag enough to insert the VOC probe. Care shall be taken so that soil particles or liquid does not enter the portable VOC analyzer.
- Record the maximum reading obtained on the appropriate forms, as described in Section 3.5.

4.10. Field Documentation

4.10.1. The following general information shall be recorded in the field log book and/or on the appropriate field form(s):

- Project and site identification.
- LEA commission number.

- Field personnel.
- Name of recorder.
- Identification of borings.
- Collection method.
- Date and time of collection.
- Types of sample containers used, sample identification numbers and QA/QC sample identification.
- Field analysis method(s).
- Field observations on sampling event.
- Name of collector.
- Climatic conditions, including air temperature.
- Chronological events of the day.
- Status of total production.
- Record of non productive time.
- QA/QC data.
- Name of drilling firm.
- Location of boring(s) on-site in sufficient detail to relocate boring at a future time (include sketch). Tape off boring locations to an affixed permanent site feature.

4.10.2. The following information shall be recorded on the boring log:

- Project name, location, and LEA commission number.
- Borehole number, borehole diameter, boring location, drilling method, contractor, groundwater observations, logger's name and date.
- Depth below grade, sample number, duplicate numbers, VOC analyzer reading, number of blows required for a six inch penetration of a two inch diameter split spoon using a 140-pound hammer, rig behavior (i.e., drilling effort, etc.).
- A complete sample description, including as a minimum: depth, material size gradation using the Burmister system, color, moisture, and density. Should a well be constructed in a borehole, a complete well schematic shall be drawn and accurately labeled.
- Use of water, including source(s) and quantity.

4.10.3. The following information shall be recorded on the Daily Field Report QA Checklist:

- Reviewer's name, date, and LEA commission number.
- Review of all necessary site activities and field forms.
- Statement of corrective actions for deficiencies.

4.10.4. The Daily Field Report Instrument Calibration record shall include the following information:

- Client's name, location, LEA commission number, and date.
- Instrument make, model, and type.
- Calibration readings.
- Calibration/filtration lot numbers.
- Field personnel and signature.

4.11. Disposal of Potentially Contaminated Materials

Potentially contaminated cuttings or fluids, as indicated by knowledge of the site, discoloration, VOC analyzer readings, or other evidence, shall be containerized on the site pending sampling and determination of hazardous waste status.

4.12. Refusal

Refusal is defined as failure to penetrate with a split spoon sampler more than one inch with 100 blows using a 140-pound hammer.

4.13. Bedrock

The term "bedrock" will not be used in a boring log or other description unless a minimum of five feet of bedrock core is recovered using an appropriate core drill, and in the opinion of a competent geologist, the core is representative of bedrock in the region.

4.14. Boring Abandonment

4.14.1. If the boring is not to be used for other purposes (i.e., monitoring well, soil vapor probe, soil vapor extraction well, etc.), it shall be abandoned.

4.14.2. The boring shall be filled and sealed as the augers are withdrawn with neat cement grout or high-density bentonite clay grout (granular bentonite).

4.14.3. Excess cuttings shall be containerized, labeled and analytical results of the contents reviewed and profiled before disposal.

4.14.4. In paved areas, the upper three feet of the borehole shall be filled with sand. up to two inches below the existing grade, to allow for repairing of the pavement.

4.14.5. Pavement shall be repaired using cold patch asphalt filler or concrete.

5. Quality Assurance/Quality Control

Review procedures outlined in Section 3 of this SOP to ensure QA/QC during hollow stem auger drilling and soil sampling.

6. References

6.1. None.

END OF DOCUMENT

Loureiro Engineering Associates, Inc.
Standard Operating Procedure
for
Installing and Developing Monitoring Wells and Piezometers

SOP ID: 10007
Date Initiated: 02/20/90
Revision No. 006: 08/12/02

Approved By: _____ 8/12/02
Joseph T. Trzaski **Date**
Senior Scientist

_____ 08/12/02
Nick D. Skoularikis **Date**
Director of Quality

REVISION RECORD

Rev #	Date	Additions/Deletions/Modifications
Initial Issue	02/20/90	
001-004	-	No record.
005	12/31/01	Formatting and minor revisions throughout.
006	08/12/02	Added section on utility clearance.

Loureiro Engineering Associates, Inc.
Standard Operating Procedure
for
Installing and Developing
Monitoring Wells and Piezometers

1. Purpose and Scope

This standard operating procedure (SOP) is designed to describe the methods and procedures used to install and develop monitoring wells and piezometers in a water-table aquifer. Monitoring well and piezometer installation and development shall generally follow the guidelines presented in the "*Handbook of Suggested Practices for the Design and Installation of Groundwater Monitoring Wells*" (United States Environmental Protection Agency (EPA), 1989), the "*RCRA Ground Water Monitoring Technical Enforcement Guidance Document*" (EPA, 1986), and any state or local guidance, or regulatory documents which are available.

This SOP describes general procedures and guidelines to be followed or consulted for the proper methods to be used when installing monitoring wells or piezometers in unconsolidated deposits and bedrock. Because each site is unique and the purpose of the monitoring wells may vary from installation to installation, no definitive rules can be established. Throughout this SOP reference to monitoring wells is also intended to mean piezometers unless specifically indicated otherwise. This SOP also applies to monitoring wells and piezometers installed by Geoprobe® direct push technologies.

2. Definitions

Geoprobe® Direct Push Machine: A vehicle-mounted, hydraulically-powered machine that uses static force and percussion to advance small-diameter sampling tools into the subsurface for collecting soil, vapor , or groundwater samples. Geoprobe® machines ad tools are manufactured by Geoprobe Systems®, Salina, Kansas.

Prepacked Well Screen (0.5 in and 1.5 in): An assembly consisting of a clotted polyvinyl chloride (PVC) pipe surrounded by environmental grade sand contained within a stainless steel wire mesh cylinder. The inner component of the prepacked screen is a flush-threaded, 0.5 inch Schedule 80 PVC pipe with 0.01 in slots. (Alternatively, a 1.5 inch Schedule 80 PVC pipe can be used). Stainless steel wire mesh with a pore size of 0.011 in makes up the outer component of the prepack. The space between the inner slotted pipe and outer wire mesh is filled with 20/40 mesh silica sand. Geoprobe®

prepacked screens are available in sections of various lengts (3 ft or 5 ft)and a nominal inside diameter of 0.5 in or 1.5 in.

3. Equipment and Decontamination

3.1. Equipment Supplied by the Drilling Contractor:

- Drilling rig.
- Monitoring well casing.
- Monitoring well screen.
- Bottom caps, plugs or points.
- Centering guides (if they are to be used).
- Filter pack sand.
- Bentonite.
- Cement-bentonite grout.
- Mud-scale to measure densities.
- Protective casing or road box.
- Steam-cleaning apparatus and supplies.
- Suitable containers (e.g., Department of Transportation (DOT)-approved 55-gallon drums with liners) for soil cuttings, well development water, and water generated from steam cleaning.
- Metal stamps for permanently marking wells.
- All necessary permits and licenses.
- If the Geoprobe® is used for well installation, Geoprobe®-specific equipment for well installation.

3.2. Equipment Supplied by Loureiro Engineering Associates, Inc. (LEA)

- Field forms.
- Indelible markers.
- Lock(s) and keys.
- Well development equipment (pumps, surge block, bailers, etc.).
- Analytical instrumentation (Analytical instrumentation includes, but is not necessarily limited to turbidity meters, pH meters, specific conductivity meters, and thermometers.).
- Calibration supplies for all analytical instrumentation, as appropriate.
- Alconox®, or other non-phosphate laboratory grade detergent.
- 5-gallon buckets.
- Decontamination brushes.
- Distilled, de-ionized water.
- Decontamination fluids (<10% methanol in water, 100% n-hexane, and

10% nitric acid).

3.3. Equipment Selection and Specifications

The following specifications will be followed:

Cement-Bentonite Grout: If cement-bentonite is utilized, the cement-bentonite grout will be a mixture of 95 pounds of Type II Portland cement, 4 to 6 pounds of powdered sodium bentonite, and 5 gallons of potable water. The bentonite must be thoroughly mixed with the water before the cement is added. The cement bentonite grout shall have a density of 14 pounds/gallon.

Filter Pack Sand: All filter pack sand will be clean, well-rounded silica sand, in factory-sealed bags. The sand will conform to the most recent version of the American Water Works Association (AWWA) Standard AWWA/ANSI A100 for water wells. In brief, the standard states that filter pack sand will have an average specific gravity of 2.5 with not more than 1% of the material having a specific gravity less than 2.25. Thin, flat or elongated particles shall not exceed 2% of the material, no more than 5% of the material shall be soluble in hydrochloric acid, and the material shall be washed and free of shale, mica, clay, dirt, loam, and organic impurities.

Bentonite: All bentonite will be pure, additive-free bentonite whether it is pellets, chips, or powder.

3.4. Equipment Decontamination

3.4.1. Equipment Decontamination for Monitoring Well Installation

All well materials and drilling equipment which are used to construct a monitoring well or piezometer must be clean and free of any potential contaminants. All well construction materials not certified by LEA personnel as decontaminated when delivered will be decontaminated by steam cleaning before being installed. Drilling equipment must also be decontaminated, prior to beginning work, by steam cleaning. Geoprobe® equipment shall be cleaned using a detergent such as Liquinox®.

All decontamination activities shall be completed at a specially constructed decontamination pad (or a portable decontamination unit). The decontamination pad shall be constructed before any drilling

activity begins. The pad shall be constructed of high-density polyethylene (HDPE) liner material, of sufficient size and strength to allow the drill rig access to the pad, and bermed to contain the generated wastewaters.

3.4.2. Equipment Decontamination for Sampling Equipment and Well Development.

All materials and equipment used to sample soil or which enter a well must be clean and free of any potential contaminants. In general, the choice of decontamination procedures shall be based upon the site-specific contaminants and outlined in the site-specific work plan.

For sites at which the contaminants are unknown, but contamination is suspected, the decontamination procedures outlined below shall be followed.

3.4.2.1. Prior to commencing any field activities, the following solutions (as appropriate for the anticipated contaminants) shall be prepared and placed into 500-ml laboratory squirt bottles: <10% methanol in water; 10% nitric acid in water; 100% n-hexane; distilled, de-ionized water. Other chemicals may be used for decontamination of site-specific contaminants if needed for decontamination of those contaminants.

3.4.2.2. In the field, prepare approximately 2.5 gallons of a solution of Alconox® (or other suitable non-phosphate laboratory grade detergent) in tap water in a 5-gallon bucket.

3.4.2.3. Prepare a piece of 5-mil polyethylene sheeting to underlie the decontamination area. The sheeting shall be of sufficient size to contain any accidental discharge of decontamination solutions. The plastic shall be bermed to contain spills. The decontamination for Geoprobe® equipment shall be performed in buckets or in tubs.

3.4.2.4. The order for decontaminating equipment is as follows:

1) Detergent scrub.
2) De-ionized (DI) water rinse.
3) Hexane rinse (to be used only if separate-phase petroleum product, other than gasoline, is present).
4) DI water rinse.

5) 10% nitric acid rinse (to be used only when metals are suspected as potential contaminants).
6) DI water rinse.
7) Methanol rinse (<10% solution).
8) Air dry.

The order of decontamination may change if different chemicals are used.

3.4.2.5. Disposable materials such as cord shall not be decontaminated and shall be disposed of after use.

3.4.3. At the end of the project day, all spent decontamination fluids and materials, such as the polyethylene sheeting and personal protective equipment, shall be managed and/or disposed of in accordance with all applicable municipal, state, and federal regulations.

4. Procedures

4.1. Utilities

4.1.1. Notify the appropriate "one call" utility notification service (e.g. Call Before You Dig at 1-800-922-4455, Contractor ID: 10502) at least three working days prior to commencing operations on a site. The locations of all proposed borings must be clearly marked in the field prior to notification. The Project Engineer/Manager **must** call and confirm that each utility has been to the site and has marked their respective lines.

4.1.2. On private sites, consult with the Owner or other person knowledgeable about the site as to the locations of potential private or abandoned utilities and locate these prior to beginning work. Upon the discretion of the Project Engineer/Manager, a pipe locator can also be used to assist in locating utilities.

4.1.3. Note that OSHA may have additional requirements for location of utilities.

4.1.4. All efforts to locate underground utilities (including names of owner or designee and time) should be properly documented in the field logbook prior to onset of the work scheduled.

4.2. OSHA

4.2.1. The Senior LEA representative shall be the Competent Person required by OSHA for all work. However, this does not relieve other LEA representatives from bringing to his or her attention conditions, which may be unsafe or present a hazard to the drilling crew, the general public, or other workers on the site.

4.3. Monitoring Well and Piezometer Installation

The specific monitoring well installation methodologies are dependent upon the specific drilling method used. In general, monitoring wells will be constructed through the inside of the drill stem, once the borehole has been advanced to the desired depth. For Geoprobe® monitoring wells, the wells will be constructed through the inside of stainless steel casing.

4.3.1. Borehole Advancement

If the borehole has been drilled to a depth greater than that at which the well is to be set, the borehole must be backfilled with bentonite pellets, bentonite chips, or a bentonite-cement slurry to a depth of approximately one foot below the intended well depth. Approximately one foot of clean sand must be placed on top of the backfill to return the borehole to the proper depth for the well installation.

For bedrock monitoring wells, the borehole shall be advanced to approximately one foot into competent bedrock and the isolation casing grouted into place. The grout is to be allowed to cure for at least 24 hours before drilling continues. After the grout has cured, the borehole is to be advanced using the appropriate technique (e.g., coring, air rotary, mud rotary) to the desired depth. If the borehole is advanced to a depth greater than that at which the well is to be set, the borehole shall be backfilled as described above.

For Geoprobe® installed wells and piezometers, the steel casing will be drilled to the specified depth of the bottom of the well using the Geoprobe® and in certain cases manually.

4.3.2. Installation of Well Screen and Casing

The appropriate lengths of well screen (with bottom cap, or plug, or well point) and casing must be joined watertight and carefully lowered inside the drill stem to the bottom of the borehole. If centering guides are used, they must be placed at intervals around the well casing, beginning no lower than 5 feet above the top of the screen.

4.3.3. Design and Installation of the Filter Pack

After the well screen and casing are installed in the borehole, the filter pack shall be installed. For monitoring wells in unconsolidated materials, the selection of the appropriate filter pack material shall be based upon a grain-size analysis of a sample collected from the intended screen interval. The selection of the appropriate filter pack material shall be based upon the methodologies presented in the "*Handbook of Suggested Practices for the Design and Installation of Groundwater Monitoring Wells*" (EPA, 1989), the "*RCRA Ground Water Monitoring Technical Enforcement Guidance Document*" (EPA, 1986), or any state or local guidance, or regulatory documents which are available. In the absence of grain size analyses, the filter pack material shall be selected based upon an experienced geologist's best judgment as to the appropriate material.

For bedrock monitoring wells, the well screen and filter pack are emplaced primarily to stabilize the borehole and are therefore not sized in the same manner as for a monitoring well in unconsolidated sediments. For typical bedrock monitoring wells, 10-slot well screen is appropriate. The selection of the appropriate filter pack material shall be based upon the slot size selected for the well screen.

A filter pack of clean silica sand will be placed around the well screen. Place the filter pack into the borehole at a uniform rate in a manner that will allow even placement of the sand. The drill stem shall be raised slowly while the sand is being placed to avoid caving of the borehole walls; the drill stem shall never be raised above the top of the filter pack during installation. Using a stainless steel weight on the end of a fiberglass tape, continuously sound the top of the filter pack as it is being installed. The filter pack shall extend from a depth of approximately one foot below the screened interval to a minimum height of one to two feet above the top of the well screen. However, this length may be adjusted if it would create the potential for cross-contamination or in the case of shallow water tables.

A finer-grained sand cap shall be installed for a minimum of one foot above the filter pack. This height may also be adjusted in the case of shallow water tables.

4.3.4. Installation of Impermeable Seal

An impermeable seal at least two feet thick must be placed on top of the fine sand cap. The seal may be composed of either bentonite pellets or a bentonite slurry. The pellets must be placed into the borehole in a slow and continuous manner that prevents bridging. This is especially important in deeper monitoring wells where

the pellets may have to be emplaced through a considerable depth of standing water in the borehole.

The bentonite slurry shall be prepared by mixing approximately 15 pounds of bentonite powder with 7 gallons of water for each one cubic foot of slurry needed. The slurry shall be emplaced in the borehole via a tremie pipe. The tremie pipe must be plugged on the bottom and have openings along the sides of the bottom one foot of pipe. This will allow the slurry to be emplaced into the borehole without disturbing the fine sand cap. This procedure is especially important for the relatively deeper wells.

Verify the position of the top of the bentonite seal using a weighted tape measure. If all or a portion of the bentonite seal must be emplaced above the water table, hydrate the bentonite with clean water. Allow 30 minutes after adding the water for the bentonite to hydrate.

The thickness of the bentonite seal may be adjusted for wells completed in aquifers with shallow water tables.

4.3.5. Installation of Grout Backfill

Place an annular seal of cement-bentonite grout above the bentonite seal. Install the cement-bentonite grout continuously from the bottom of the annular space to the ground surface through a tremie pipe. The tremie pipe must be plugged on the bottom and have openings along the sides of the bottom one-foot length of pipe. This will allow the grout to be emplaced into the borehole without disturbing the bentonite seal. Alternatively, a bentonite slurry can be used.

4.3.6. Surface Completion

All monitoring wells will be finished at the surface with a concrete pad (Figure 1). The concrete pad shall typically be two-feet square and at least four inches thick. The concrete shall fill the borehole to a depth below the frost line. The pad shall be constructed in one continuous pour of concrete. Note that some of the cement-bentonite grout used for the annular seal may have to be removed to install the concrete pad. A survey pin may be installed in the concrete pad before it dries, if necessary.

For monitoring wells that will be completed above-grade, a locking steel protective casing shall be installed in the concrete. The protective casing shall extend at least three feet into the ground and two feet above ground. For monitoring wells that will be completed flush, a steel roadbox, suitable for traffic loads, with a gasketed cover and drain shall be installed.

Each well will be properly labeled on the exterior of the locking cap or protective steel casing with a metal stamp indicating the permanent well identifier.

4.3.7. Well Protection Bollards

Guard posts may be installed in high-traffic areas for additional protection. One to four guard posts would be installed around the protective casing, within the edges of the concrete pad. If used, guard posts will consist of concrete-filled steel tubes, at least 3 inches in diameter, painted with multiple coats of epoxy-based paint to prevent rust. The guard posts would extend at least two feet below ground and approximately three feet above ground.

4.3.8. Geoprobe® Prepacked Screen Monitoring Well Installation

The installation of prepacked screen monitoring wells in general follows the following four steps (Figure 2):

4.3.8.1. Anchoring the Well Assembly at Depth

In the first step, an expendable anchor point is driven to the desired depth on the end of a 2.125 outside diameter probe rod string. A prepacked screen assembly is inserted into the inside diameter of the rod string with 5-ft sections of PVC riser. The screens and riser pipe are attached to the anchor point via a snap-lock connector. If the monitoring well is to have a flush-mount finish, it is suggested to prepare a large enough hole to accept a standard well protector before driving the probe rods.

4.3.8.2. Providing a Sand Pack and Grout Barrier

The natural formation will sometimes collapse around the well screens as the probe rod string is withdrawn. This is frequently encountered in sandy formations below the water table. This provides an effective barrier between the screens and grout material used to seal the well annulus. If the formation does not collapse, a sand barrier must be placed from the surface while retracting the well casing. This procedure needs to be followed carefully to prevent the grout from reaching the well screens, potentially giving rise to non-representative samples.

Using a flat tape measure or water level sounder, determine the depth from the top of the PVC riser to the bottom of the annulus between the riser and probe rods. If unstable conditions have resulted in formation collapse (measured depth of 2 to 3 ft), then proceed to 4.3.8.3. if the borehole has not collapsed, then retract the casing to 1 ft above the screen while adding

sand. Take measurements with a weighted tape. Continue until 2 ft of sandpack have been established above the well screen.

4.3.8.3. Installing a Bentonite Seal above the Screen

Proceed as in section 4.3.4. above. Bring the bentonite seal to within 2 ft from ground surface to allow well completion

4.3.8.4. Installing Well Protection.

Proceed as in Section 4.3.6. above.

5. Well Development

Monitoring well development may be accomplished by surging and bailing (or pumping), or over pumping. Other methods, such as air jetting, backwashing, or air-lift pumping, shall be avoided because these methods introduce fluids into the formation and may have unexpected influences on groundwater quality, if only for a short period of time.

Immediately upon opening the well, the air in the wellhead will be sampled for VOCs using a portable VOC analyzer, such as a Photovac MicroTIP®. The well cap shall be opened slightly and the sampling port of the VOC analyzer shall be inserted into the well. The maximum reading shall be recorded on the appropriate field paperwork. The instrument shall be zeroed with ambient air prior to the measurement, and the initial and final readings shall be recorded for each well.

Measures shall be taken during well sampling to prevent surface soils from coming in contact with the purging equipment and lines. Typically, a polyethylene sheet is placed on the ground providing adequate coverage for the equipment being used.

In addition, the procedures described in LEA SOP ID 10004 in the sections for Field Analysis, Well Evacuation, and Sample Withdrawal shall be followed.

5.1. Surging and Bailing

In surging and bailing, a well is developed by alternately surging a short section of the screen with a tight-fitting surge block. Begin by lowering the surge block to the top of the screened interval and swab the well with a pumping action with a typical stroke of 2 to 3 feet. (Begin surging at the top of the well intake to avoid having loosened material from "sand-locking" the surge block.) Do not surge the well too violently to avoid damaging the well screen or the filter pack. Remove the surge block at regular intervals and bail (or pump) the fine material from the well. Proceed with surging throughout the length of the well screen, being careful

to avoid hitting the bottom of the well. Check the quality of the bailed water at regular intervals, as described in Section 5.3.

In cases where a considerable volume of sediment may initially be drawn into the well, begin surging the well gently in the casing above the well screen. Proceed with surging and bailing to the bottom of the screened interval.

5.2. Overpumping

In overpumping, a well is developed by operating a pump in the well at a capacity which greatly exceeds the formation's ability to supply water. The flow velocity into the well during overpumping usually greatly exceeds the flow velocity induced during normal sampling. This increased velocity causes movement of particles from the formation into the well.

Begin developing the well by installing a suitable pump at the bottom of the well. Alternatively, a surface-mounted pump with a suction hose may be used if the drawdown inside the well will not exceed the pump's available lift. The discharge from the pump shall be directed to approved containers. The pump (or intake hose) must be equipped with a backflow-prevention valve to prevent introducing aerated water into the aquifer.

Start the pump and discharge water at the highest practical rate. If the well runs dry, stop the pump and allow the well to recharge. Check the quality of the discharged water at regular intervals as described in Section 4.3.

5.3. Completing Well Development

During bailing or pumping, measure and record water quality parameters to gauge the degree and effectiveness of development. Typically, pH, temperature, specific conductivity, and turbidity shall be checked at periodic intervals (but at least every three well-volumes) until the purge water begins to appear clear. Then measurements shall be made after each well volume until the parameters stabilize. The water quality parameters may be considered stable when:

- pH, temperature, and specific conductivity of consecutive measurements have relative percent differences (RPD), as defined below, of less than 10%; and,
- The turbidity is 5 NTU or less (applicable only in aquifers with low percentages of fines. This may not be achievable in all situations, but the turbidity shall be less than 50 NTU and shall stabilize with an RPD of less than 10%).

However, in no case shall the development stop before the above criteria are met, and:

- At least 3 well volumes have been removed; or,
- The well has been surged and pumped for at least 30 minutes.

The RPD between two measurements (e.g., M1 and M2) is calculated as follows:

$$RPD = \frac{|M1 - M2|}{(M1 + M2)/2} \times 100\%$$

All well development equipment and supplies shall be thoroughly decontaminated prior to and between each monitoring well. Place all development water into properly labeled, suitable containers; leave all filled containers in an appropriate location.

6. Documentation

6.1. Well Development

Well development activities will be documented on the appropriate field forms, and specifically on the "Field Data Record Groundwater" and "Well Development Report" forms. Information provided on those forms includes: purge method, amount of water per well volume, instrument readings after purging of each well volume.

6.2. Monitoring Well Completion Log Forms

During the installation of a monitoring well, complete records must be kept of quantities and types of all well construction materials used.

A complete geologic log shall be kept during advancement of the borehole for the well. The procedures for completing geologic logs are presented in *Standard Operating Procedure for Geologic Logging of Unconsolidated Sedimentary Materials* (SOP ID 10015). However, the additional information pertinent to monitoring well installations shall be recorded on a separate form. A monitoring well completion form is provided in Attachment 1. In addition typical wellhead details – one for flush-mount well completions and one for above-grade completions - are provided as Figure 1. Whenever a monitoring well is installed, record all appropriate information concerning the quantity of materials used, the

type and manufacturer of the materials, the mixtures of grouts or slurries, and any pertinent notes regarding the installation of each well.

After the project is completed, submit a copy of the attached Geologic Soil Boring/Well Completion Log Request Form along with copies of all Monitoring Well Completion forms for final typing and entry into the LEA database. The request form provides information on the types of final logs to be produced, the scale at which to plot the final forms, and notes common to all reports.

7. Quality Assurance/Quality Control

Quality assurance/quality control (QA/QC) procedures will be followed in compliance with the site-specific work plan.

8. References

8.1. EPA, *RCRA Groundwater Monitoring Technical Enforcement Guidance Document*, OSWER 9950.1, September 1986.

8.2 EPA, *Handbook of Suggested Practices for the Design and Installation of Groundwater Monitoring Wells*, EPA/600/4-89/034, 1989.

8.3 Geoprobe, *Geoprobe® 0.5-in x 1.4 in OD and 0.75 in x 1.4 in OD Prepacked Screen Monitoring Wells, Standard Operating Procedure*, Technical Bulletin No. 962000, September 1996, revised; June 2002.

END OF DOCUMENT

ATTACHMENT 1

Monitoring Well Completion Report and Well Development Forms

WELL COMPLETION REPORT

Project:
LEA Comm. No.
Client
Location _____

Start Date | | **End Date** | |

Well ID

Drilling Contractor _____
Drilling Method _____
Sampling Method _____
Groundwater Observation
Depth _____ **at** _____ **Hours**

Logged by
Drilling Foreman _____
Drill Rig _____
GPS Latitude _____
GPS Longitude _____

Protector
- Material _____
- Diameter _____
- Length _____ Ground
- Stickup _____
- Key # _____
- Cover Type _____

Top Seal
- Top _____
- Bottom _____
- Material _____

Backfill
- Top _____
- Bottom _____
- Material _____

Secondary Sand
- Top _____
- Bottom _____
- Size _____

Filter Pack
- Top _____
- Bottom _____
- Material _____

Reported depth to bottom of boring _____

Comments

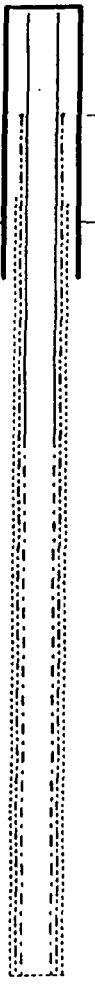

Concrete Diameter _____
Concrete Thickness _____

Reference
- Stickup _____
- Description _____

Casing
- Diameter _____
- Material _____
- Length _____
- Stickup _____

Seal
- Top _____
- Bottom _____
- Material _____

Screen
- Top _____
- Bottom _____
- Material _____
- Diameter _____
- Length _____
- Slot Size _____

Miscellaneous Materials (Quantity Used/Item)
- Cement _____
- Bentonite Chips _____
- Bentonite Pellets _____
- Bentonite Powder _____
- Grout Weight _____
- Filter Pack Sand _____
- Capping Sand _____
- Well Point _____
- Well Plug _____

Signature _____

Loureiro Engineering Associates, Inc.

Loureiro Engineering Associates, Inc.

FIELD SAMPLING RECORD
WELL DEVELOPMENT

LEA Comm. No.
Project
Location
Client

Page _____ of _____
Date ___/___/___
Time ___:___

Monitoring Well Number _____ Sample Number(s) _____ _____

Initial Field Data and Measurements

Depth of Well _____ Reference Used _____
Depth to Water _____ PID/FID Reading _____
Height of Column _____ Interface Yes / No If yes, Depth _____ Lighter / Heavier

Well Casing Diameter _____ Material _____
Protector Road Box / Stickup
Ground to Reference _____
Comments _____

General Condition	OK	Bad
Casing Secure		
Collar Intact		
Cover Locked		
Other (describe)		

Development Information

Purge Volume Factors
0.5" - 0.01
1" - 0.041
1.5" - 0.091
2" - 0.16
4" - 0.65
6" - 1.5

Initial Sample Observations
- Clear ☐
- Colored ☐
- Cloudy ☐
- Turbid ☐
- Odor ☐
- Sheen ☐

Volumes \ Parameter	Gallons	Temp (C)	pH (SU)	Spec.Con.	Turbidity	Other
Initial						

Developement Method Peristaltic Pump / Bailer / Inertial Pump / Other _____

Field Decontamination? Yes / No If Yes, with what? _____
Waste Container ID _____

Additional Comments

Field Personnel _____ _____ *Signature*

FIGURES

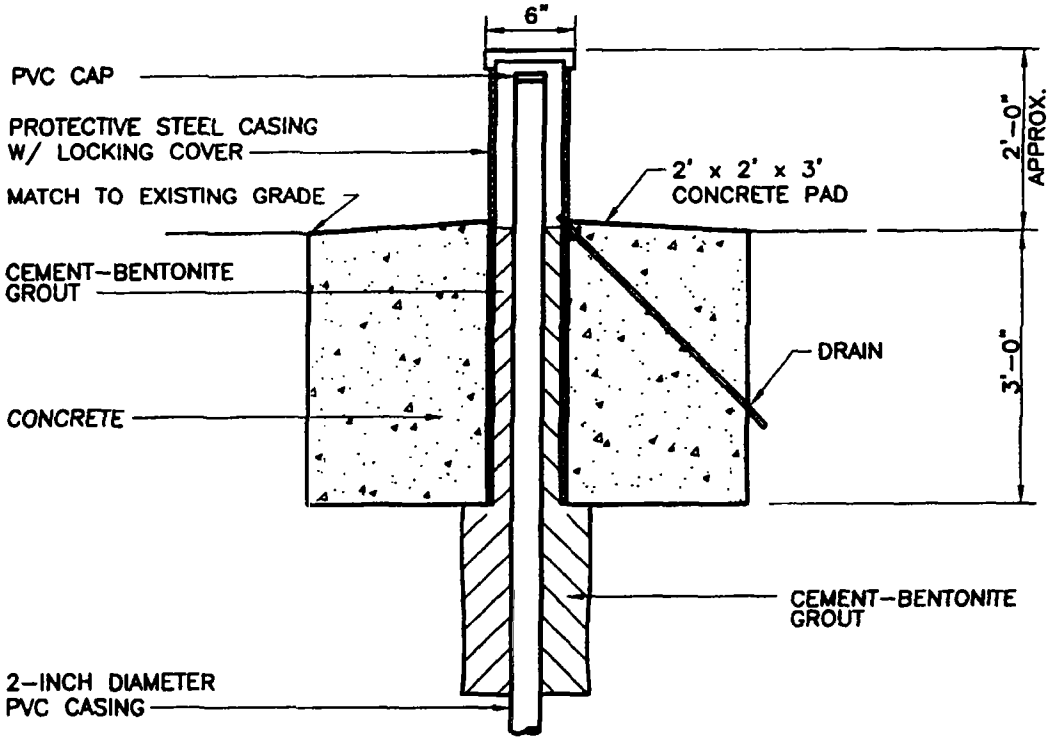

ABOVE GRADE WELLHEAD
CONSTRUCTION DETAIL - NOT TO SCALE

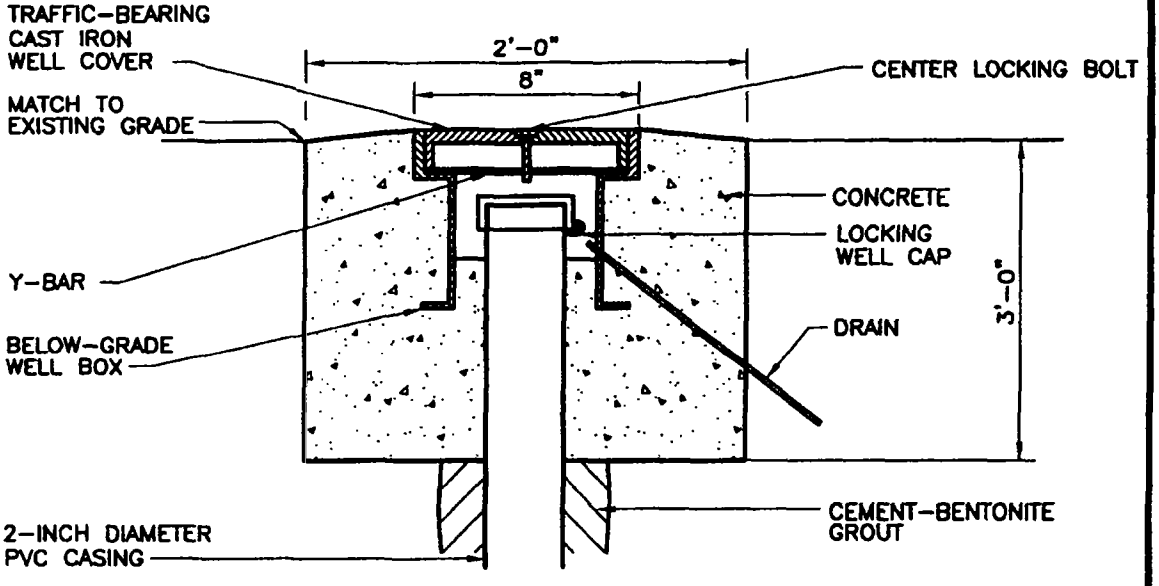

FLUSH TO GRADE WELLHEAD
CONSTRUCTION DETAIL - NOT TO SCALE

REFERENCES:

EPA, "RCRA GROUNDWATER MONITORING TECHNICAL ENFORCEMENT GUIDANCE DOCUMENT", OSWER 9950.1, SEPTEMBER 1986.

EPA, "HANDBOOK OF SUGGESTED PRACTICES FOR THE DESIGN AND INSTALLATION OF GROUNDWATER MONITORING WELLS", EPA/600/4-89/034, 1989.

LEA SOP for Installing & Developing Monitoring Wells & Piezometers

TYPICAL WELLHEAD DETAILS

Comm.No.	
100	**FIGURE 1**

Wellhead details.dwg

G:\Autocad\PROJECTS\0000100\SOPs\Wellhead details.dwg, 8/8/2004 2:27:19 PM

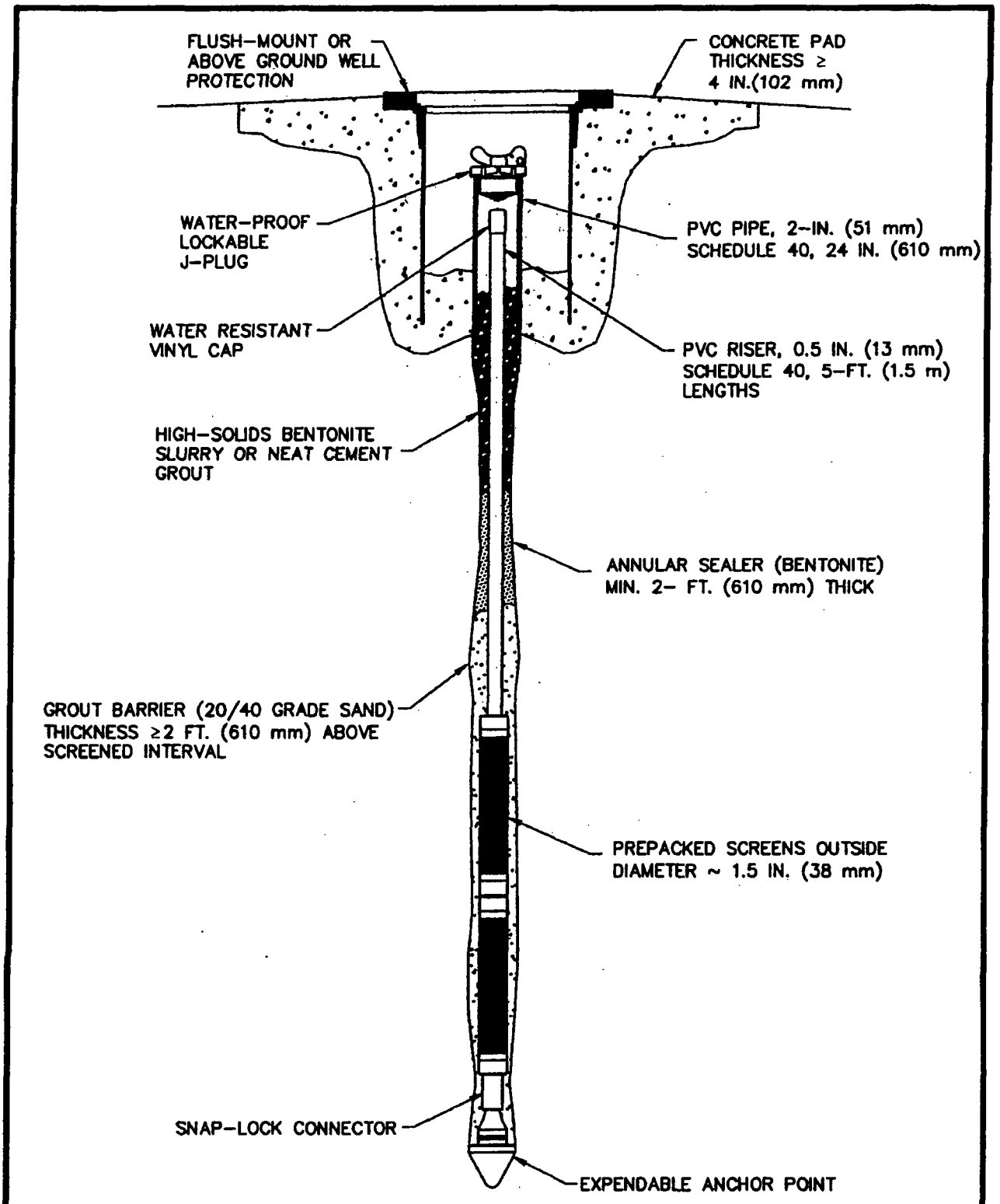

ADAPTED FROM "GEOPROBE ® SYSTEMS - THE COMPLETE PROBING SYSTEM".

LEA SOP for Installing & Developing Monitoring Wells & Piezometers

COMPLETED PRE-PACKED SCREEN WELL

Comm.No.		
100	FIGURE 2	LEA

G:\Autocad\PROJECTS\0000100\SOPs\Prepack-screen-well.dwg, 6/8/2004 1:53:06 PM

Loureiro Engineering Associates, Inc.
Standard Operating Procedure
for
Low Flow (Low Stress)
Liquid Sample Collection and Field Analysis

SOP ID: 10039
Date Initiated: 06/11/01
Revision No. 003: 04/01/05

Approved By: ***/s/ David C. Brisson*** ***04/01/05***
David C. Brisson **Date**
Project Geologist

/s/ Gail Batchelder ***04/01/05***
Gail L. Batchelder **Date**
Technical Director, Hydrogeology

/s/ Nick D. Skoularikis ***04/01/05***
Nick D. Skoularikis **Date**
Director of Quality

REVISION RECORD

Rev #	Date	Additions/Deletions/Modifications
Initial Issue	06/11/01	
001	04/01/02	Updated to reflect new SOP format.
002	12/02/02	Updated to reflect stabilization procedures.
003	04/01/05	Incorporated modified low-flow sampling procedure to include the use of a peristaltic pump.

Loureiro Engineering Associates, Inc.
Standard Operating Procedure
For
Low Flow (Low Stress)
Liquid Sample Collection and Field Analysis

1. Purpose and Scope

This standard operating procedure (SOP) describes the procedures to be followed for measurement of static water level elevations, detection of immiscible layers, well evacuation, sample withdrawal, and field analyses utilizing low flow sampling techniques.

2. Definitions

2.1. Immiscible layers: The term is used to denote free-phase liquids that may be present in the aquifer as a result of a release. These liquids may have a density lighter than water (light non-aqueous phase liquids (LNAPL) or floaters) or heavier than water (dense non-aqueous phase liquids (DNAPL) or sinkers).

3. Equipment

3.1. Equipment required for the collection and field analysis of liquid samples shall include:

- Water-level indicator (accurate to 0.01 foot).
- Distilled water.
- Hand towels.
- Portable volatile organic compound (VOC) analyzer (Photovac MicroTIP®, Foxboro OVA® or equivalent).
- Interface probe/clear view bailer (to check for light non-aqueous phase liquids only).
- Flow-through cell capable of monitoring pH, temperature, specific-conductance, oxidation reduction potential (Eh), dissolved oxygen (DO), and turbidity.
- Polyethylene plastic sheeting.

- Adjustable rate submersible pump (preferred), adjustable rate centrifugal pump, bladder pump (constructed of stainless steel or Teflon®), or adjustable rate peristaltic pump
- Appropriate tubing for the pump used, for instance polyethylene tubing (1/4 to 3/8 inch outer diameter (O.D.)) for the peristaltic pump
- Clean disposable gloves.
- Alconox®, or other non-phosphate laboratory grade detergent.
- Three 5-gallon buckets.
- Decontamination brushes.
- Distilled, de-ionized (DI) water.
- Decontamination fluids (less than 10 percent methanol in water, 100 percent n-hexane, and 10 percent nitric acid).

4. Procedure

4.1. Health & Safety Requirements

All health and safety requirements described in the site specific Health & Safety Plan and/or Job Hazard analysis shall be observed

4.2. Equipment Decontamination

All materials and equipment that enter a well must be clean and free of any potential contaminants. Do not use any contaminated equipment or materials which are not designed to be used for groundwater monitoring, even if this means that the sampling will not be performed as planned.

In general, the choice of decontamination procedures should be based upon knowledge of the site-specific contaminants and outlined in the site-specific work plan.

For sites at which the contaminants are unknown, but contamination is suspected, the decontamination procedures outlined below should be followed.

4.2.1. Prior to commencing any field activities, the following solutions (as appropriate for the appropriate contaminants) should be prepared and placed into 500-ml laboratory squirt bottles: less than 10 percent

methanol in water; 10 percent nitric acid in water; 100 percent n-hexane; distilled, de-ionized water.

4.2.2. In the field, prepare approximately 2.5 gallons of a solution of Alconox® (or other suitable non-phosphate laboratory grade detergent) in tap water in a 5-gallon bucket.

4.2.3. Prepare a piece of 5-mil polyethylene sheeting to underlie the decontamination area. The sheeting should be of sufficient size to contain any accidental discharge of decontamination solutions. The plastic should be bermed to contain spills.

4.2.4. The order for decontaminating equipment is as follows:

1) Detergent scrub.
2) DI water rinse.
3) Hexane rinse (to be used only if separate-phase petroleum product, other than gasoline, is present).
4) DI water rinse.
5) 10 percent nitric acid rinse (to be used only when metals are suspected as potential contaminants).
6) DI water rinse.
7) Methanol rinse (less than 10 percent solution).
8) Air dry.

4.2.5. Materials such as the bailer cord should not be decontaminated and should just be disposed of after each test. Note: Bailers should be used **only** to check for LNAPL before sample collection using low-flow/low stress procedures. A bailer may be used to check for DNAPL only **after** all sample collection equipment has been removed from the well.

4.2.6. Wrap each piece of decontaminated equipment in aluminum foil, as appropriate, to maintain cleanliness.

4.2.7. At the end of the project day, dispose of all spent decontamination fluids and materials such as the polyethylene sheeting and personal protective equipment in accordance with all applicable municipal, state, and federal regulations.

4.3. Sample Collection

4.3.1. Immediately upon opening the well, the air in the well head will be sampled for VOCs using a portable VOC analyzer, such as a Photovac

MicroTIP® or equivalent. The instrument shall be zeroed with ambient air prior to the measurement, and the highest reading observed shall be recorded for each well. Measurements should be taken until stabilization of the readings has occurred.

4.4. Detection of Immiscible Layers

4.4.1. Should evidence warrant, a sampling event shall include provisions for the detection of immiscible phases prior to well evacuation or sample collection. LNAPLs are relatively insoluble liquid organic compounds with densities less than that of water (1 g/ml), while DNAPLs are organic compounds with densities greater than that of water. Lighter and/or denser immiscible phases may be encountered in a groundwater monitoring well.

4.4.2. An interface probe will be used to determine the existence of any immiscible layers, light or dense. Alternatively, a clear fluorocarbon resin or PVC bailer may be used to determine the existence of the phases or oil sheen in the well when no accurate determination of the immiscible layer thickness is required. As noted above, efforts to detect LNAPL only can be performed prior to sample collection. Efforts to detect DNAPL can be performed only AFTER sample collection has occurred.

4.4.3. Should elevations of the immiscible layers be required, levels of the fluids shall be measured to an accuracy of 0.01 feet using an electronic interface probe capable of detecting the interfaces between air, product, and water. The interface levels shall be recorded in the field form. Adjustments of the observed head to the theoretical hydraulic head shall be calculated based on the density conversion factor associated with the particular non-aqueous phase liquid.

4.4.4. If LNAPL is detected in a well, collection of a groundwater sample from that well is not recommended unless otherwise specified in the site-specific work plan or work instruction. However, if a groundwater sample must be collected from that well, low-flow sampling is the recommended technique, although care must be taken to minimize mobilization of the LNAPL into the zone from which the sample will be collected.

4.5. Measurement of Static Water Level

4.5.1. The static water elevations in each well shall be measured prior to each sampling event. This is performed initially to characterize the site, and in subsequent sampling rounds to determine whether horizontal or vertical flow gradients have changed. A change in hydrologic conditions may necessitate modification of the groundwater monitoring program.

4.5.2. Remove the protective cover and locking cap from the well.

4.5.3. Each well shall have a surveyed reference point located at the top of the well casing with the locking cap removed. The reference point shall be easily recognizable, since the personnel conducting the sampling may differ from one sampling event to the next.

4.5.4. The following parameters shall be measured with an accuracy of 0.01 ft:

- Depth to standing water.
- Depth to bottom of well.

4.5.5. A water-level indicator with a fiberglass tape will be used for measurement. As a result of possible pressure differences between the well atmosphere and the ambient atmosphere, the water level will be allowed fifteen minutes to equilibrate upon removal of the well cap. If excess pressure is encountered the water level will be allowed greater than fifteen minutes to equilibrate upon removal of the well cap. The results shall be recorded on the appropriate field form(s).

4.5.6. Total depth measurements will be compared to original depths to determine the degree of siltation that may have occurred. This information shall be noted on the field forms. Should significant siltation occur in any well, the well shall be redeveloped by an approved method.

4.5.7. The portion of the tape immersed in the well shall be decontaminated during retrieval using a distilled water rinse followed by drying with a clean wipe, prior to use in another well. This decontamination procedure shall be amended, as needed, to accommodate the specific type of contamination anticipated.

4.5.8. The static water level should be monitored and recorded throughout the purging and sampling of each well.

4.6. Field Analysis

4.6.1. Parameters that are physically or chemically unstable shall be tested utilizing a flow-through cell. Such parameters as pH, temperature, specific conductance, DO, Eh, and turbidity will be measured in the field at the temperature of the well sample.

4.6.2. Parameters such as pH, temperature, specific conductance, DO, and Eh shall be measured using a flow-through-cell (YSI model 6820 or equivalent). The meter shall be calibrated prior to use and at the end of the day using supplied solutions in accordance with the instructions provided by the manufacturer. Calibration information will be recorded in the field before and after each calibration.

4.5.3 Turbidity can be measured with a separate turbidimeter, although some flow-through cells include a turbidimeter. It is useful to have a separate turbidimeter on hand to check the validity of the turbidity values obtained using the flow-through cell if there is difficulty reaching low turbidity values or if the turbidity readings recorded do not seem to be consistent with visual observation of the water samples. All samples, including turbidity samples and samples to be submitted for analysis, must be collected before the groundwater passes through the flow-through cell to prevent cross-contamination by potentially stagnant fluid within the flow-through cell. This can be accomplished by using a bypass assembly or disconnecting the tubing from the flow-cell inlet prior to sampling.

4.7. Well Evacuation

4.7.1. Calculate standing water in the well based on the following schedule and record on the appropriate field form:

Well Diameter (inches)	Conversion Factor (gal/feet)
2	0.163
4	0.654
6	1.47

4.7.2. Generally, a submersible, air-lift, bladder, or peristaltic pump equipped with appropriate tubing of inert materials (such as polyethylene), shall be used to evacuate the monitoring wells.

4.7.3. A new piece of polyethylene plastic shall be placed on the ground adjacent to the well. Sampling and purging equipment such as the pump, tubing, containers, etc., shall be placed on the polyethylene sheet, never on the ground.

4.7.4. The pumps and tubing shall be prepared for insertion into the well while wearing disposable gloves. Make sure that any tubing or pump apparatus is of sufficient length to reach the appropriate depth for pumping.

4.7.5. Lower the pump and/or tubing gently into the water column to the midpoint of the saturated portion of the screened interval, unless otherwise specified. A site-specific sampling plan should specify the sampling depth, or provide specific criteria for the selection of intake depth for each well. If possible keep the pump intake two feet above the bottom of the well. Start the pump at the lowest speed setting and slowly increase the speed until discharge occurs. The initial pumping rate shall be approximately 0.1 liters per minute, however, the pumping rate shall not exceed 0.25 liters per minute. Measure the water level to ensure that drawdown in excess of 0.3 feet does not occur in the well. Adjust the pumping rate as necessary until little or no drawdown occurs. If the drawdown exceeds 0.3 feet, reduce pumping rate if possible. If drawdown still does not stabilize at a depth above the pump intake, shut the pump down and allow the well to recharge. It should be noted that stable drawdowns of 0.3 feet are desirable but not mandatory. Stabilization of the drawdown to a depth greater than 0.3 feet is acceptable as long as the depth at which stabilization occurs is above the pump intake. However, it is important that the stabilization depth is clearly recorded and maintained.

4.7.6. Monitor and record the water level and pumping rate at a minimum of every five minutes during purging. Calculate the volume of the discharge tubing, bladder pump (if used), and the flow-through cell. Monitor and record indicator field parameters (turbidity, pH, Eh, DO, temperature and specific conductance) in the well from the first water extracted during the purging process and at least every five minutes thereafter. Stabilization is considered to be achieved when three consecutive readings are within the following limits and no increasing or decreasing trend in the data can be observed:

- Turbidity (10% for values less than 5 and greater than 1 NTU). It should be noted that achievements of turbidity levels less than 5 NTUs are not mandatory but efforts should be made to collect a groundwater samples with the lowest turbidity achievable.
- DO (10%, measured as milligrams per liter).
- Specific Conductance and Temperature (3%).
- pH (+/- 0.1 unit).
- ORP/Eh (+/- 10 millivolts).

4.7.7. If after 2.5 hours of purging or the purging of three well volumes, (whichever comes first) the field parameters have not stabilized, purging may be discontinued to allow sample collection. Similarly, if it is not possible to obtain stabilization as described above as a result of slow recovery of the well, the well shall be evacuated and allowed to recover, at which point the samples should be collected immediately. The appropriate sampling forms shall include a notation that sample collection occurred without stabilization. Samples obtained from slow-yielding wells shall be collected as soon as a sufficient volume is available for a sample for each parameter.

4.7.8. Do **not** re-use purging equipment. Pumps shall be decontaminated between monitoring wells, in accordance with procedures noted in Section 4.1.

4.7.9. Record sampler's name, sampling time, volume of water purged, parameters measured, weather conditions, sample number, analyses required and all other pertinent information in the field notebook and/or appropriate field forms, and complete the chain of custody form.

4.7.10. Any water purged from the monitoring wells shall be stored in appropriate containers until the laboratory analyses are available. Then it should be disposed of in accordance with all applicable local, state and federal requirements.

4.7.11. Storage shall be in containers approved for storage of hazardous materials, and in an appropriate designated location at the facility.

4.8. Sample Withdrawal

4.8.1. In order to ensure that the groundwater sample is representative of the formation, it is important to minimize physical alteration (i.e. agitation during purging and/or sample collection) or chemical contamination of the sample during the withdrawal process.

4.8.2. Use an appropriate pump to purge each well; the same pump used for purging shall be used for sample withdrawal.

4.8.3. The samples shall be collected at a location before entering the flow-through cell. To minimize the effects of water column agitation on sample quality, samples shall be collected from the pump tubing in the following order into pre-labeled sample containers:

- VOCs.
- Total petroleum hydrocarbons.
- Extractable organics (semivolatiles).
- PCBs.
- Metals.
- Phenols.
- Cyanide.
- Chloride and sulfate.
- Nitrate and ammonia.
- Turbidity.
- Radionuclides.
- Purgeable organic carbon (POCs).
- Purgeable organic halogens (POX).
- Total organic halogens (TOX).
- Total organic carbon (TOC).

4.8.4. Samples shall be obtained from the monitoring wells as soon as possible after purging. This may require waiting an extended period for low-yielding wells.

4.8.5. Samples collected for VOC analysis shall be free of any air bubbles and inverted upon filling. Bacterial samples shall be collected using dedicated gloves; taking care not to allow anything to touch the inside of the sampling container.

4.8.6. Samples collected for metals analysis, which are to be filtered in the field, shall be passed through an appropriately sized filter prior to placement in the sample bottle. Pre-rinse the filter with approximately 25 to 50 milliliters of groundwater prior to collecting the filtered metals sample. Filter sizes will generally be either 0.45 microns for dissolved metals and 10 microns for metals that could be present as colloids or adsorbed onto colloids that could be mobile in the aquifer. The appropriate filter size for the individual project must be provided in site-specific work instructions.

4.9. "What If" Scenarios

4.9.1. Certain field conditions may be encountered that influence the choice of equipment to be used or altogether limit the feasibility of low-flow sampling techniques. The following is a brief description of select scenarios to provide field personnel with a guideline if similar circumstances are encountered

4.9.2. Turbidity

4.9.2.1. If turbidity measurements do not stabilize as described above after 2.5 hours of purging or the evacuation of three well volumes, whichever comes first, sample collection can be initiated. Record observations of the color, clarity, and other observable characteristics of the groundwater (such as the presence or absence of particles) in the field paperwork

4.9.2.2. If samples are being collected for analysis for total (unfiltered) metals and the turbidity has not stabilized below 10 NTU, a sample for additional analysis for metals should also be collected after being filtered in the field through an in-line 10-micron filter, if specified in the work instructions.

4.9.3. Peristaltic Pump

4.9.3.1. Difficulty may be encountered while advancing the flexible polyethylene peristaltic pump tubing to the desired depth within a deep well or older well. Excessive friction may result from the tubing contacting the sidewall of the well casing or accumulations of material on the well casing (i.e. mineral and bacterial deposits). In these scenarios, the tubing may coil within the well during advancement and prevent the desired depth from being attained. Efforts to weight the tubing should be attempted before using alternate pumping techniques.

4.9.3.2. If such well conditions are expected, a bladder pump or similarly submersible pump should be used instead of a peristaltic pump. A bladder pump provides sufficient mass on the tubing to allow for advancement in deep or older wells.

4.9.3.3. A peristaltic pump cannot be used to sample wells in which the depth to water is greater than approximately 25 feet.

4.9.4. Sampling Depth

4.9.4.1. If conditions exist that prevent the appropriate pump or tubing from being advanced to the midpoint of the saturated portion of the screened interval, low-flow sampling techniques shall not be used. Instead, sampling shall be conducted using conventional purging and sampling techniques, as described in LEA SOP 10004 entitled *Liquid Sample Collection and Field Analysis*. Justification for not using low-flow sampling techniques must be provided in the field paperwork.

4.10. Field Documentation

4.10.1. Field documentation shall include at a minimum: a chain-of-custody form, Field Data Record Groundwater Form, Sample Collection Form, Daily Field Report. Sample labels and sample seals shall be used for proper sample identification.

4.10.1.1. The labels shall be sufficiently durable to withstand immersion for 48 hours without detaching and to withstand normal handling. The information provided shall be legible at all times.

4.10.1.2. The following information shall be provided on the sample label using an indelible pen:

- Sample identification number.
- Date and time of collection.
- Place of collection.
- Parameter(s) requested (if space permits).

4.10.1.3. Appropriate field forms will be used to log all pertinent information with an indelible pen. The following information shall be provided:

- Project and site identification.
- LEA commission number.
- Identification of well.
- Static water level measurement technique.
- Presence of immiscible layers and detection method.
- Time well purged.
- Collection method for immiscible layers and sample identification numbers.
- Well evacuation procedure/equipment.
- Sample withdrawal procedure/equipment.
- Date and time of collection.
- Types of sample containers used and sample identification numbers.
- Preservative(s) used.
- Parameters requested for analysis.
- Field analysis method(s).
- Whether or not field filtration was performed and the filter size, if appropriate.
- Field observations on day of sampling event.
- Record of site activities.
- Field personnel.

- Climatic conditions, including air temperature.
- Status of total production.
- Record of non-productive time.

4.10.1.4. The Field Sampling Record shall include at a minimum the following information:

- Identification of well.
- Date and time of collection.
- Name of collector.
- Sample number.

4.10.1.5. The chain-of-custody record shall include the following information:

- Company's name and location.
- Date and time of collection.
- Sample number.
- Container type, number, size.
- Preservative used.
- Signature of collector.
- Signatures of persons involved in the chain of possession.
- Analyses to be performed.
- Type and number of samples.

4.10.1.6. The Field Data Record Groundwater Form shall be updated during the sampling of each well and include the following information:

- Identification of well.
- Well depth, diameter, depth to water.
- Static water level depth and measurement technique.
- Purge volume and pumping rate.
- Time well is purged.

- Measurements of initial field parameters and all subsequent readings.
- Any specific circumstances, as described above, such as field filtering, lack of stabilization of parameters, water characteristics, etc.
- LEA commission number.
- Date.

4.10.1.7. The Daily Field Record shall include the following information:

- Client's name, location, LEA commission number, date.
- Instrument make, model, and type.
- Calibration readings.
- Calibration/filtration lot numbers.
- Field personnel and signature.

4.10.1.8. The Daily Field Record shall assure the completeness of the sampling round and include the following information:

- Reviewer's name, date, and LEA commission number.
- Review of all necessary site activities and field forms.
- Statement of corrective actions for deficiencies.

5. References

5.1. United States Environmental Protection Agency (EPA), Region I. *Low Stress (Low Flow) Purging and Sampling Procedure for the Collection of Groundwater Samples from Monitoring Wells,* July 30, 1996, Revision 2.

5.2. EPA. *Groundwater Sampling Guidelines for Superfund and RCRA Project Managers – Groundwater Forum Issue Paper,* Office of Solid Waste and Emergency Response, (EPA 542-S-02-001), May 2002.

5.3. Robert W. Puls and Michael Barcelona, EPA. *Low-Flow (Minimal Drawdown) Ground-Water Sampling Procedures,* in Groundwater Issue, (EPA/540/S-95/504), April 1996.

5.4. Connecticut Department of Environmental Protection, Bureau of Water Management, Permitting Enforcement and Remediation Division. *Site Characterization Guidance Document,* Draft, June 12, 2000.

END OF DOCUMENT

ATTACHMENT 2

DAT, Inc.
Standard Operating Procedures
and
Quality Assurance Manual

DAT Laboratory, Inc.
Controlled Copy
Copy 4 of 5
Approved by Farrah Carnahan
Date 10/20/2006

SOP - 39

STANDARD OPERATING PROCEDURE (SOP)
FOR THE DETERMINATION OF VOLATILE ORGANIC COMPOUNDS BY GC/MS
METHOD 8260B

Reviewed by: _____ Date: 10/10/06
Quality Assurance Officer

Approved by: _____ Date: 10/10/06
President, DAT Inc.

DATA ANALYSIS TECHNOLOGIES, INC (DAT)
7715 CORPORATE BLVD.
PLAIN CITY, OH 43064

Date:	Reviewed by:	Date	Reviewed by:

TABLE OF CONTENTS

Section		Page#
1.0	SCOPE AND APPLICATION	4
2.0	SUMMARY OF METHOD	5
3.0	DEFINITIONS	5
4.0	INTERFERENCES	8
5.0	APPARATUS AND MATERIALS	9
6.0	REAGENTS	12
7.0	SAMPLE COLLECTION, PRESERVATION, AND HANDLING	17
8.0	PROCEDURE	18
9.0	QUALITY CONTROL	29
10.0	METHOD PERFORMANCE	30
11.0	SAFETY PRECAUTIONS	31
12.0	CALCULATIONS:	31
13.0	CORRECTIVE ACTIONS AND CONTINGENCIES	33
14.0	WASTE MANAGEMENT	33
15.0	REFERENCES	33
APPENDIX I		34

INDEX OF TABLES

Table **Page#**

TABLE 1 38

TABLE 2 41

TABLE 3 43

TABLE 4 46

TABLE 5 47

TABLE 6 51

TABLE 7 53

PROCEDURE

1.0 SCOPE AND APPLICATION

1.1. This SOP describes the use of Method 8260B. Method 8260B is used to determine volatile organic compounds in a variety of solid waste matrices. This method is applicable to nearly all types of samples, regardless of water content, including various air sampling trapping media, ground and surface water, aqueous sludges, caustic liquors, acid liquors, waste solvents, oily wastes, mousses, tars, fibrous wastes, polymeric emulsions, filter cakes, spent carbons, spent catalysts, soils, and sediments. See Table 1 for a list of common compounds that can be determined by this method.

1.2. There are various techniques by which these compounds may be introduced into the GC/MS system. Purge-and-trap, by Methods 5030 (aqueous samples) and 5035 (solid and waste oil samples), is the most commonly used technique for volatile organic analytes. However, other techniques are also appropriate and necessary for some analytes. These include direct injection following dilution with hexadecane (Method 3585) for waste oil samples; automated static headspace by Method 5021 for solid samples; direct injection of an aqueous sample (concentration permitting) or injection of a sample concentrated by azeotropic distillation (Method 5031); and closed system vacuum distillation (Method 5032) for aqueous, solid, oil and tissue samples. For air samples, Method 5041 provides methodology for desorbing volatile organics from trapping media (Methods 0010, 0030, and 0031). In addition, direct analysis utilizing a sample loop is used for sub-sampling from Tedlar® bags (Method 0040).

1.3. Method 8260B can be used to quantitate most volatile organic compounds that have boiling points below 200°C. Volatile, water soluble compounds can be included in this analytical technique by the use of azeotropic distillation or closed-system vacuum distillation. Such compounds include low molecular weight halogenated hydrocarbons, aromatics, ketones, nitriles, acetates, acrylates, ethers, and sulfides. See Tables 2 and 3 for analytes that have been evaluated on a purge-and-trap GC/MS system. Also, the method detection limits for 25- mL sample volumes are presented. The following compounds are also amenable to analysis by Method 8260B:

Bromobenzene	1,3-Dichloropropane
n-Butylbenzene	2,2-Dichloropropane
sec-Butylbenzene	1,1-Dichloropropene
tert-Butylbenzene	p-Isopropyltoluene
Chloroacetonitrile	Methyl acrylate
1-Chlorobutane	Methyl-t-butyl ether
1-Chlorohexane	Pentafluorobenzene
2-Chlorotoluene	n-Propylbenzene
4-Chlorotoluene	1,2,3-Trichlorobenzene
Dibromofluoromethane	1,2,4-Trimethylbenzene
cis-1,2-Dichloroethene	1,3,5-Trimethylbenzene

1.4. The estimated quantitation limit (EQL) of Method 8260B for an individual compound is somewhat instrument dependent and also dependent on the choice of sample preparation/introduction method. Using standard quadrapole instrumentation and the purge-

and-trap technique, limits should be approximately 5 µg/kg (wet weight) for soil/sediment samples, 0.5 mg/kg (wet weight) for wastes, and 5 µg/L for ground water (see Table 3). Somewhat lower limits may be achieved using an ion trap mass spectrometer or other instrumentation of improved design. No matter which instrument is used, EQLs will be proportionately higher for sample extracts and samples that require dilution or when a reduced sample size is used to avoid saturation of the detector.

1.5. This method is restricted to use by, or under the supervision of, analysts experienced in the use of gas chromatograph/mass spectrometers, and skilled in the interpretation of mass spectra and their use as a quantitative tool.

2.0 SUMMARY OF METHOD

2.1. The volatile compounds are introduced into the gas chromatograph by the purge-and-trap method or by other methods (see Sec. 1.2). The analytes are introduced directly to a wide-bore capillary column or cryofocussed on a capillary pre-column before being flash evaporated to a narrow-bore capillary for analysis. The column is temperature-programmed to separate the analytes, which are then detected with a mass spectrometer (MS) interfaced to the gas chromatograph (GC).

2.2. Analytes eluted from the capillary column are introduced into the mass spectrometer via a jet separator or a direct connection. (Wide-bore capillary columns normally require a jet separator, whereas narrow-bore capillary columns may be directly interfaced to the ion source). Identification of target analytes is accomplished by comparing their mass spectra with the electron impact (or electron impact-like) spectra of authentic standards. Quantitation is accomplished by comparing the response of a major (quantitation) ion relative to an internal standard using a five-point calibration curve.

2.3. The method includes specific calibration and quality control steps that supersede the general requirements provided in Method 8000.

3.0 DEFINITIONS

3.1. Acceptance Criteria: Specified limits placed on characteristics of an item, process, or service defined in required documents.

3.2. Analytical Batch: Composed of prepared environmental samples which are analyzed together as a group.

3.3. Accuracy: The degree of agreement between an observed value and an accepted reference value. Accuracy includes a combination of random error (precision) and systematic error (bias) components which are due to sampling and analytical operations; a data quality indicator.

3.4. Aliquot: A portion of the field sample to be processed through the analytical steps.

3.5. Calibration: To determine, by measurement or comparison with a standard, the correct value of

each scale reading n a meter, instrument, or other device. The levels of the applied calibration standard should bracket the range of planned or expected sample measurements.

3.6. Calibration curve: The graphical relationship between the known values, such as concentrations, of a series of calibration standards and their instrument response.

3.7. Calibration Standards (CAL): A solution prepared from the primary dilution solution. The CAL is used to calibrate an instrument.

3.8. Duplicate Analyses: The analyses or measurements of the variable of interest perfomed identically on two sub-samples of the same sample. The results from the duplicate analyses are used to evaluate analytical or measurement precision but not the precision of sampling, preservation, or storage internal to the laboratory.

3.9. Field Blank or Trip Blank: Blank prepared in the field or laboratory by filling a clean container with pure de-ionized water and appropriate preservative, if any, for the specific sampling activity being undertaken.

3.10. Instrument Detection Limit (IDL): The minimum concentration of an analyte that can be measured with 99% confidence that the analyte concentration is greater than zero. Determine the IDL with seven replicates of standard solution taken at the instrument with no specific analytical preparation.

3.11. Method Detection Limit (MDL): The minimum concentration of an analyte that can be measures with 99% confidence that the analyte concentration is greater than zero. Determine the MDL with seven replicates of standard solution taken through the preparative and analytical procedures.

3.12. Organic-free laboratory reagent water: Water in which no target analytes or interferences are detected as required by the analytical method.

3.13. Holding Times (Maximum Allowable Holding Times): The maximum times that samples may be held prior to analysis and still be considered valid or not compromised.

3.14. Internal Standard: A known amount of standard added to a test portion of a sample as a reference for evaluating and controlling the precision and bias of the applied method.

3.15. Method Blank (MB): An aliquot of reagent water that is treated exactly as a sample including exposure to all glassware, equipment, solvents, reagents, internal standards, and surrogates that are used with other samples. The MB is used to determine if method analytes or other interferences are present in the laboratory environment, the reagents, or the apparatus.

3.16. Laboratory Fortified Blank (LFB) or Laboratory Spike (LS): An aliquot of reagent water to which a known quantity of the method analyte is added in the laboratory. The LFB or LS is analyzed exactly like a sample, and its purpose is to determine whether the method is in control, and whether the laboratory is capable of making accurate and precise measurements at the required method detection limit.

3.17. Matrix: The component or substrate that contains the analyte of interest.

3.18. Matrix Spike (MS) or Laboratory Fortified Matrix (LFM): A sample prepared by adding a known mass of target analyte to a specified amount of matrix sample for which an independent estimate of target analyte concentration is available. Used to determine the effect of the matrix on a method's recovery efficiency. The background concentration of the analyte in the sample matrix must be determined in a separate aliquot and the measured value in the LFM corrected for background concentration.

3.19. Matrix Spike Duplicate (MSD) or Laboratory Fortified Matrix Duplicate (LFMD): A second replicate of spike prepared in the laboratory and analyzed to obtain a measure of the precision and recovery for each analyte.

3.20. Primary Dilution Standard Solution (PDS): A solution of several analytes purchased from a commercial source and diluted as needed to prepare calibration solutions and other needed analyte solutions.

3.21. Procedural Standard Calibration: A calibration method where aqueous calibration standards are prepares and processed (e.g., purged, extracted, and/or derivatized) in exactly the same manner. All steps in the process from addition of sampling preservatives through instrumental analyses compensates for any inefficiencies in the processing procedure.

3.22. Quality Control: The overall system of technical activities whose purpose is to measure and control the quality of a product or service so that it meets the needs of users.

3.23. Raw Data: Any original factual information from a measurement activity or study recorded in a laboratory notebook, worksheets, records, memoranda, notes, extractions sheets, or exact copies thereof that are necessary for the reconstruction and evaluation of the report activity.

3.24. Reference Method: A method of known and documented accuracy and precision issued by an organization recognized as competent to do so.

3.25. Retention Times: Time to elute a specific chemical from a chromatographic column, for a specific carrier gas flow rate, measured from the time the chemical is injected into the gas stream until it appears at the detector.

3.26. Relative Retention Times: A rate of Retention times (RTs) for two chemicals for the same chromatographic column and carrier gas flow rate, where the denominator represents a reference chemical.

3.27. Stock Standard Solution: A concentrated solution containing a single certified standard that is a method analyte, or a concentrated solution of a single analyte prepared in the laboratory with an assayed reference compound. Stock standard solutions are used to prepare primary dilution standards.

3.28. Surrogate Standards: An organic compound which is similar to the target analyte(s) in chemical composition and behavior in the analytical process, but which is not normally found in the environmental samples.

4.0 INTERFERENCES

4.1. Major contaminant sources are volatile materials in the laboratory and impurities in the inert purging gas and in the sorbent trap. The use of non-polytetrafluoroethylene (PTFE) thread sealants, plastic tubing, or flow controllers with rubber components may not be used, since such materials out-gas organic compounds which will be concentrated in the trap during the purge operation. Analyses of calibration and reagent blanks provide information about the presence of contaminants. When potential interfering peaks are noted in blanks, the analyst must change the purge gas source and regenerate the molecular sieve purge gas filter. Subtracting blank values from sample results is not permitted. If reporting values without correcting for the blank results creates a false positive result for a sample, an explanation must be included in the text accompanying the uncorrected data.

4.2. Contamination may occur when a sample containing low concentrations of volatile organic compounds is analyzed immediately after a sample containing high concentrations of volatile organic compounds. A technique to prevent this problem is to rinse the purging apparatus and sample syringes with two portions of organic-free reagent water between samples. After the analysis of a sample containing high concentrations of volatile organic compounds, one or more blanks must be analyzed to check for cross-contamination. Alternatively, if the sample immediately following the high concentration sample does not contain the volatile organic compounds present in the high level sample, freedom from contamination has been established.

4.3. For samples containing large amounts of water-soluble materials, suspended solids, high boiling compounds, or high concentrations of compounds being determined, it may be necessary to wash the purging device with a soap solution, rinse it with organic-free reagent water, and then dry the purging device in an oven at 105°C. In extreme situations, the entire purge-and-trap device may require dismantling and cleaning. Screening of the samples prior to purge-and-trap GC/MS analysis is highly recommended to prevent contamination of the system. This is especially true for soil and waste samples. Screening may be accomplished with an automated headspace technique (Method 5021) or by Method 3820B (Hexadecane Extraction and Screening of Purgeable Organics).

4.4. Many analytes exhibit low purging efficiencies from a 25-mL sample. This often results in significant amounts of these analytes remaining in the sample purge vessel after analysis. After removal of the sample aliquot that was purged, and rinsing the purge vessel three times with organic-free water, the empty vessel should be subjected to a heated purge cycle prior to the analysis of another sample in the same purge vessel. This will reduce sample-to-sample carryover.

4.5. Special precautions must be taken to analyze for methylene chloride. The analytical and sample storage area will be isolated from all atmospheric sources of methylene chloride. Otherwise, random background levels will result. Since methylene chloride will permeate through PTFE tubing, all gas chromatography carrier gas lines and purge gas plumbing will be constructed from stainless steel or copper tubing. Laboratory clothing worn by the analyst will be clean, since clothing previously exposed to methylene chloride fumes during

liquid/liquid extraction procedures can contribute to sample contamination. Laboratory coats may not be worn in the instrumentation rooms.

4.6. Samples can be contaminated by diffusion of volatile organics (particularly methylene chloride and fluorocarbons) through the septum seal of the sample container into the sample during shipment and storage. A trip blank prepared from organic-free reagent water and carried through the sampling, handling, and storage protocols can serve as a check on such contamination.

4.7. Use of sensitive mass spectrometers to achieve lower detection level will increase the potential to detect laboratory contaminants as interferences.

4.8. Direct injection - Some contamination may be eliminated by baking out the column between analyses. Changing the injector liner will reduce the potential for cross-contamination. A portion of the analytical column may need to be removed in the case of extreme contamination. The use of direct injection will result in the need for more frequent instrument maintenance.

4.9. If hexadecane is added to waste samples or petroleum samples that are analyzed, some chromatographic peaks will elute after the target analytes. The oven temperature program must include a post-analysis bake out period to ensure that semivolatile hydrocarbons are volatilized.

5.0 APPARATUS AND MATERIALS

5.1. Purge-and-trap device for aqueous samples - Described in Method 5030.

5.2. Purge-and-trap device for solid samples - Described in Method 5035.

5.3. Automated static headspace device for solid samples - Described in Method 5021.

5.4. Azeotropic distillation apparatus for aqueous and solid samples - Described in Method 5031.

5.5. Vacuum distillation apparatus for aqueous, solid and tissue samples - Described in Method 5032.

5.6. Desorption device for air trapping media for air samples - Described in Method 5041.

5.7. Air sampling loop for sampling from Tedlar® bags for air samples - Described in Method 0040.

5.8. Injection port liners (HP Catalog #18740-80200, or equivalent) - modified for direct injection analysis by placing a 1-cm plug of glass wool approximately 50-60 mm down the length of the injection port towards the oven (see illustration below). A 0.53-mm ID column is mounted 1 cm into the liner from the oven side of the injection port, according to manufacturer's specifications.

5.9. Gas chromatography/mass spectrometer/data system

5.9.1. Gas chromatograph - An analytical system complete with a temperature-programmable gas chromatograph suitable for splitless injection with appropriate interface for sample introduction device. The system includes all required accessories, including syringes, analytical columns, and gases.

5.9.1.1. The GC is equipped with variable constant differential flow controllers so that the column flow rate will remain constant throughout desorption and temperature program operation.

5.9.1.2. The capillary column is either directly coupled to the source or interfaced through a jet separator, depending on the size of the capillary and the requirements of the GC/MS system.

5.9.1.3. Capillary pre-column interface - This device is the interface between the sample introduction device and the capillary gas chromatograph, and is necessary when using cryogenic cooling. The interface condenses the desorbed sample components and focuses them into a narrow band on an uncoated fused-silica capillary pre-column. When the interface is flash heated, the sample is transferred to the analytical capillary column.

5.9.1.4. During the cryofocussing step, the temperature of the fused-silica in the interface is maintained at -150°C under a stream of liquid nitrogen. After the desorption period, the interface must be capable of rapid heating to 250°C in 15 seconds or less to complete the transfer of analytes.

5.9.2. Gas chromatographic columns

5.9.2.1. Column 1 - 60 m x 0.75 mm ID capillary column coated with VOCOL (Supelco), 1.5-µm film thickness, or equivalent.

5.9.2.2. Column 2 - 30 - 75 m x 0.53 mm ID capillary column coated with DB-624 (J&W Scientific), Rt -502.2 (RESTEK), or VOCOL (Supelco), 3-µm film thickness, or equivalent.

5.9.2.3. Column 3 - 30 m x 0.25 - 0.32 mm ID capillary column coated with 95% dimethyl - 5% diphenyl polysiloxane (DB-5, Rt -5, SPB-5, or equivalent), 1-µm film thickness.

5.9.2.4. Column 4 - 60 m x 0.32 mm ID capillary column coated with DB-624 (J&W Scientific), 1.8-µm film thickness, or equivalent.

5.9.3. Mass spectrometer - Capable of scanning from 35 to 300 amu every 2 sec or less, using 70 volts (nominal) electron energy in the electron impact ionization mode. The mass spectrometer must be capable of producing a mass spectrum for 4-Bromofluorobenzene (BFB) which meets all of the criteria in Table 4 when 5-50 ng of the GC/MS tuning standard (BFB) are injected through the GC. To ensure sufficient precision of mass

spectral data, the desirable MS scan rate allows acquisition of at least five spectra while a sample component elutes from the GC An ion trap mass spectrometer may be used if it is capable of axial modulation to reduce ion-molecule reactions and can produce electron impact-like spectra that match those in the EPA/NIST Library. Because ion-molecule reactions with water and methanol in an ion trap mass spectrometer may produce interferences that coelute with chloromethane and chloroethane, the base peak for both of these analytes will be at m/z 49. This ion should be used as the quantitation ion in this case. The mass spectrometer must be capable of producing a mass spectrum for BFB which meets all of the criteria in Table 3 when 5 or 50 ng are introduced.

5.9.4. GC/MS interface - Two alternatives may be used to interface the GC to the mass spectrometer.

5.9.4.1. Direct coupling, by inserting the column into the mass spectrometer, is generally used for 0.25 - 0.32 mm ID columns.

5.9.4.2. A jet separator, including an all-glass transfer line and glass enrichment device or split interface, is used with a 0.53 mm column.

5.9.4.3. Any enrichment device or transfer line may be used, if all of the performance specifications described in Sec. 8.0 (including acceptable calibration at 50 ng or less) can be achieved. GC/MS interfaces constructed entirely of glass or of glass-lined materials are recommended. Glass may be deactivated by silanizing with dichlorodimethylsilane.

5.9.5. Data system - A computer system that allows the continuous acquisition and storage on machine-readable media of all mass spectra obtained throughout the duration of the chromatographic program must be interfaced to the mass spectrometer. The computer must have software that allows searching any GC/MS data file for ions of a specified mass and plotting such ion abundances versus time or scan number. This type of plot is defined as anExtracted Ion Current Profile (EICP). Software must also be available that allows integrating the abundances in any EICP between specified time or scan-number limits. The most recent version of the EPA/NIST Mass Spectral Library should also be available.

5.10. Microsyringes - 10-, 25-, 100-, 250-, 500-, and 1,000-µL.

5.11. Syringe valve - Two-way, with Luer ends (three each), if applicable to the purging device.

5.12. Syringes - 5-, 10-, or 25-mL, gas-tight with shutoff valve.

5.13. Balance - Analytical, capable of weighing 0.0001 g, and top-loading, capable of weighing 0.1g.

5.14. Glass scintillation vials - 20-mL, with PTFE-lined screw-caps or glass culture tubes with PTFE-lined screw-caps.

5.15. Vials - 2-mL, for GC autosampler.

5.16. Disposable pipets - Pasteur.

5.17. Volumetric flasks, Class A - 10-mL and 100-mL, with ground-glass stoppers.

5.18. Spatula - Stainless steel.

6.0 REAGENTS

6.1. Reagent grade inorganic chemicals shall be used in all tests. Unless otherwise indicated, it is intended that all inorganic reagents shall conform to the specifications of the Committee on Analytical Reagents of the American Chemical Society, where such specifications are available. Other grades may be used, provided it is first ascertained that the reagent is of sufficiently high purity to permit its use without lessening the accuracy of the determination.

6.2. Organic-free laboratory reagent water - All references to water in this method refer to organic-free reagent water, as defined in Chapter One of SW-846.

6.3. Methanol, CH_3OH - Pesticide quality or equivalent, demonstrated to be free of analytes. Store apart from other solvents.

6.4. Reagent Hexadecane - Reagent hexadecane is defined as hexadecane in which interference is not observed at the method detection limit of compounds of interest. Hexadecane quality is demonstrated through the analysis of a solvent blank injected directly into the GC/MS. The results of such a blank analysis must demonstrate that all interfering volatiles have been removed from the hexadecane.

6.5. Polyethylene glycol, $H(OCH_2CH_2)OH$ - Free of interferences at the detection limit of the target analytes.

6.6. Hydrochloric acid (1:1 v/v), HCl - Carefully add a measured volume of concentrated HCl to an equal volume of organic-free reagent water.

6.7. Stock standard solutions are purchased commercially from Supelco (catalog #4-8775). Internal standards and surrogate mixes are purchased from Supelco at 2000 µg/mL concentration. (Record these standards in pure standards log upon arrival) The 2000 µg/mL solutions are diluted in purge and trap quality methanol (6.3) to 20 µg/mL. These solutions are recorded in a current standards log and given a traceable ID. These solutions should be stored in the freezer due to the volatile target compounds they contain, and should be checked against second source mixes containing the CCC and SPCC compounds which are available commercially and prepared in the same manner. A Calibration curve is made by adding the following amounts of each solution via syringe into 5mL of purge and trap quality water. The standards are then purged and a calibration curve is established in the data system.

Standard Concentration	Amount Internal Standard (20µg/mL)	Amount Calibration Mix (20µg/mL)	Amount Surrogate (20µg/mL)
500 ng	10 µL	25 µL	25 µL
400 ng	10 µL	20 µL	20 µL
200 ng	10 µL	10 µL	10 µL
120 ng	10 µL	6 µL	6 µL
60 ng	10 µL	3 µL	3 µL
20 ng	10 µL	1 µL	1 µL

Syringes should be dedicated to each mix and should be kept clean at all times. All pipets, glassware, and other material used in making dilutions of standards should be rinsed thoroughly with P/T methanol and clean water before using to minimize contamination. The commercial stock mixes should be sealed after use and stored in the freezer for future use.

6.8. If stock solutions (3.27) are prepared from pure standard materials, prepare the stock standard solutions in methanol (6.3), using assayed liquids or gases, as appropriate.

6.8.1. Place about 9.8 mL of methanol in a 10-mL tared ground-glass-stoppered volumetric flask. Allow the flask to stand, unstoppered, for about 10 minutes or until all alcohol-wetted surfaces have dried. Weigh the flask to the nearest 0.0001 g.

6.8.2. Add the assayed reference material, as described below.

6.8.2.1. Liquids - Using a 100-µL syringe, immediately add two or more drops of assayed reference material to the flask; then reweigh. The liquid must fall directly into the alcohol without contacting the neck of the flask.

6.8.2.2. Gases - To prepare standards for any compounds that boil below 30°C (e.g., bromomethane, chloroethane, chloromethane, or vinyl chloride), fill a 5-mL valved gas-tight syringe with the reference standard to the 5.0 mL mark. Lower the needle to 5 mm above the methanol meniscus. Slowly introduce the reference standard above the surface of the liquid. The heavy gas will rapidly dissolve in the methanol. Standards may also be prepared by using a lecture bottle equipped with a septum. Attach PTFE tubing to the side arm relief valve and direct a gentle stream of gas into the methanol meniscus.

6.8.3. Reweigh, dilute to volume, stopper, and then mix by inverting the flask several times. Calculate the concentration in milligrams per liter (mg/L) from the net gain in weight. When compound purity is assayed to be 96% or greater, the weight may be used without correction to calculate the concentration of the stock standard. Commercially-prepared stock standards may be used at any concentration if they are certified by the manufacturer or by an independent source.

6.8.4. Transfer the stock standard solution into a bottle with a PTFE-lined screw-cap. Store, with minimal headspace and protected from light, at -10°C or less or as recommended by the standard manufacturer. Standards will be returned to the freezer as soon as the

analyst has completed mixing or diluting the standards to prevent the evaporation of volatile target compounds.

6.8.5. Frequency of Standard Preparation

6.8.5.1. Standards for the permanent gases will be monitored frequently by comparison to the initial calibration curve. Fresh standards will be prepared if this check exceeds a 20% drift. Standards for gases usually need to be replaced after one week or as recommended by the standard manufacturer, unless the acceptability of the standard can be documented. Dichlorodifluoromethane and dichloromethane will usually be the first compounds to evaporate from the standard and will, therefore, be monitored very closely when standards are held beyond one week.

6.8.5.2. Standards for the non-gases will be monitored frequently by comparison to the initial calibration. Fresh standards will be prepared if this check exceeds a 20% drift. Standards for non-gases usually need to be replaced after six months or as recommended by the standard manufacturer, unless the acceptability of the standard can be documented. Standards of reactive compounds such as 2-chloroethyl vinyl ether and styrene may need to be prepared more frequently.

6.8.6. Preparation of Calibration Standards From a Gas Mixture

An optional calibration procedure involves using a certified gaseous mixture daily, utilizing a commercially-available gaseous analyte mixture of bromomethane, chloromethane, chloroethane, vinyl chloride, dichloro-difluoromethane and trichlorofluoromethane in nitrogen. Mixtures of documented quality are stable for as long as six months without refrigeration. (VOA-CYL III, RESTEK Corporation, Cat. #20194 or equivalent).

6.8.6.1. Before removing the cylinder shipping cap, be sure the valve is completely closed (turn clockwise). The contents are under pressure and should be used in a well-ventilated area.

6.8.6.2. Wrap the pipe thread end of the Luer fitting with PTFE tape. Remove the shipping cap from the cylinder and replace it with the Luer fitting.

6.8.6.3. Transfer half the working standard containing other analytes, internal standards, and surrogates to the purge apparatus.

6.8.6.4. Purge the Luer fitting and stem on the gas cylinder prior to sample removal using the following sequence:

A. Connect either the 100-µL or 500-µL Luer syringe to the inlet fitting of the cylinder.

B. Make sure the on/off valve on the syringe is in the open position.

C. Slowly open the valve on the cylinder and withdraw a full syringe volume.

D. Be sure to close the valve on the cylinder before you withdraw the syringe from the Luer fitting.

E. Expel the gas from the syringe into a well-ventilated area.

F. Repeat steps a through e one more time to fully purge the fitting.

6.8.6.5. Once the fitting and stem have been purged, quickly withdraw the volume of gas you require using steps 6.7.6.4 (a) through (d). Be sure to close the valve on the cylinder and syringe before you withdraw the syringe from the Luer fitting.

6.8.6.6. Open the syringe on/off valve for 5 seconds to reduce the syringe pressure to atmospheric pressure. The pressure in the cylinder is ~30 psi.

6.8.6.7. The gas mixture will be quickly transferred into the reagent water through the female Luer fitting located above the purging vessel.

NOTE: *Make sure the arrow on the 4-way valve is pointing toward the female Luer fitting when transferring the sample from the syringe. Be sure to switch the 4-way valve back to the closed position before removing the syringe from the Luer fitting.*

6.8.6.8. Transfer the remaining half of the working standard into the purging vessel. This procedure insures that the total volume of gas mix is flushed into the purging vessel, with none remaining in the valve or lines.

6.8.6.9. The concentration of each compound in the cylinder is typically 0.0025 µg/µL.

6.8.6.10. The following gas volumes will be spiked into 5 mL of water to produce a typical 5-point calibration:

Gas Volume Calibration	Concentration
40 µL	20 µg/L
100 µL	50 µg/L
200 µL	100 µg/L
300 µL	150 µg/L
400 µL	200 µg/L

6.8.6.11. The following gas volumes will be spiked into 25 mL of water to produce a typical 5-point calibration:

Gas Volume Calibration	Concentration
10 µL	1 µg/L
20 µL	2 µg/L
50 µL	5 µg/L
100 µL	10 µg/L

250 µL 25 µg/L

6.9. Secondary dilution standards - Using stock standard solutions, prepare secondary dilution standards in methanol containing the compounds of interest, either singly or mixed together. Secondary dilution standards must be stored with minimal headspace and will be checked frequently for signs of degradation or evaporation, especially just prior to preparing calibration standards from them. Store in a vial with no headspace. Replace after one week. Secondary standards for gases will be replaced after one week unless the acceptability of the standard can be documented. When using premixed certified solutions, store according to the manufacturer's documented holding time and storage temperature recommendations. The analyst will also handle and store standards as stated in Section 6.7 and return them to the freezer as soon as standard mixing or diluting is completed to prevent the evaporation of volatile target compounds.

6.10. Surrogate standards - The recommended surrogates are toluene-d_8, 4-bromofluorobenzene, 1,2-dichloroethane-d_4, and dibromofluoromethane. Other compounds may be used as surrogates, depending upon the analysis requirements. A stock surrogate solution in methanol will be prepared as described above, and a surrogate standard spiking solution will be prepared from the stock at a concentration of 50-250 µg/10 mL, in methanol. Each sample undergoing GC/MS analysis must be spiked with 10 µL of the 20 ug/mL surrogate spiking solution prior to analysis. The surrogate spike concentration is 200 ng.

6.11. Internal standards - The recommended internal standards are fluorobenzene, chlorobenzene-d_5 and 1,4-dichlorobenzene-d_4 . Other compounds may be used as internal standards as long as they have retention times similar to the compounds being detected by GC/MS. Prepare internal standard stock and secondary dilution standards in methanol using the procedures described in Sections .6.7 and 6.8. It is recommended that the secondary dilution standard be prepared at a concentration of 20 mg/L of each internal standard compound. Addition of 10 µL of this standard to 5.0 mL of sample or calibration standard would be the equivalent of 200 ng. If a more sensitive mass spectrometer is employed to achieve lower detection levels, then more dilute internal standard solutions may be required. Area counts of the internal standard peaks must be between 50-200% of the areas of the target analytes in the mid-point calibration analysis.

6.12. 4-Bromofluorobenzene (BFB) standard - A standard solution containing 20 ug/mL of BFB in methanol will be prepared. If a more sensitive mass spectrometer is employed to achieve lower detection levels, then a more dilute BFB standard solution may be required.

6.13. Calibration standards -There are two types of calibration standards used for this method: initial calibration standards and calibration verification standards. When using premixed certified solutions, store according to the manufacturer's documented holding time and storage temperature recommendations.

6.13.1. Initial calibration standards will be prepared at a minimum of five different concentrations from the secondary dilution of stock standards (see Sections 6.7 and 6.8) or from a premixed certified solution. Prepare these solutions in organic-free reagent water. At least one of the calibration standards will correspond to a sample concentration at or below that necessary to meet the data quality objectives of the project. The

remaining standards will correspond to the range of concentrations found in typical samples but will not exceed the working range of the GC/MS system. Initial calibration standards will be mixed from fresh stock standards and dilution standards when generating an initial calibration curve.

6.13.2. Calibration verification standards will be prepared at a concentration near the mid-point of the initial calibration range from the secondary dilution of stock standards (see Sections 6.7 and 6.8) or from a premixed certified solution. Prepare these solutions in organic-free laboratory reagent (3.12). See Section 8.4 for guidance on calibration verification.

6.13.3. It is the intent of EPA that all target analytes for a particular analysis be included in the initial calibration and calibration verification standard(s). These target analytes may not include the entire list of analytes for which the method has been demonstrated. However, a quantitative result will not be reported for a target analyte that was not included in the calibration standard(s).

6.13.4. The calibration standards must also contain the internal standards chosen for the analysis.

6.14. Matrix spiking and laboratory control sample (LCS) standards - Matrix spiking standards will be prepared from volatile organic compounds which are representative of the compounds being investigated. At a minimum, the matrix spike will include 1,1-dichloroethene, trichloroethene, chlorobenzene, toluene, and benzene. The matrix spiking solution will contain compounds that are expected to be found in the types of samples to be analyzed.

6.14.1. Some permits may require the spiking of specific compounds of interest, especially if polar compounds are a concern, since the spiking compounds listed above would not be representative of such compounds. The standard will be prepared in methanol, with each compound present at a concentration of 250 µg/10.0 mL.

6.14.2. The spiking solutions will not be prepared from the same standards as the calibration standards. However, the same spiking standard prepared for the matrix spike may be used for the LCS.

6.14.3. If a more sensitive mass spectrometer is employed to achieve lower detection levels, more dilute matrix spiking solutions may be required.

6.15. Great care must be taken to maintain the integrity of all standard solutions. All standards must be stored in methanol be stored at -10°C or less, in amber bottles with PTFE-lined screw-caps.

7.0 SAMPLE COLLECTION, PRESERVATION, AND HANDLING

7.1. Sample collection is outside the scope of this SOP.

7.2. All samples submitted to the laboratory for volatile analysis by Method 8260B shall be stored in

the volatiles refrigerator until analysis.

7.3. All samples must be analyzed within 14 days of collection.

8.0 PROCEDURE

8.1. Various alternative methods are provided for sample introduction. All internal standards, surrogates, and matrix spiking compounds (when applicable) must be added to the samples before introduction into the GC/MS system.

8.1.1. Direct injection - This includes: injection of an aqueous sample containing a very high concentration of analytes; injection of aqueous concentrates from Method 5031 (azeotropic distillation); and injection of a waste oil diluted 1:1 with hexadecane (Method 3585). Direct injection of aqueous samples (non-concentrated) has very limited applications. It is only used for the determination of volatiles at the toxicity characteristic (TC) regulatory limits or at concentrations in excess of 10,000 µg/L. It may also be used in conjunction with the test for ignitability in aqueous samples (along with Methods 1010 and 1020), to determine if alcohol is present at greater than 24%.

8.1.2. Purge-and-trap - This includes purge-and-trap for aqueous samples (Method 5030) and purge-and-trap for solid samples (Method 5035). Method 5035 also provides techniques for extraction of high concentration solid and oily waste samples by methanol (and other water-miscible solvents) with subsequent purge-and-trap from an aqueous matrix using Method 5030.

8.1.2.1. The purge-and-trap of aqueous samples is performed at ambient temperature, while purging of soil/solid samples is performed at 40°C, to improve purging efficiency.

8.1.2.2. Aqueous and soil/solid samples may also be purged at temperatures above those being recommended as long as all calibration standards, samples, and QC samples are purged at the same temperature, appropriate trapping material is used to handle the excess water, and the laboratory demonstrates acceptable method performance for the project. Purging of aqueous samples at elevated temperatures (e.g.,40°C) may improve the purging performance of many of the water soluble compounds which have poor purging efficiencies at ambient temperatures.

8.1.3. Vacuum distillation - this technique may be used for the introduction of volatile organics from aqueous, solid, or tissue samples (Method 5032) into the GC/MS system.

8.1.4. Automated static headspace - this technique may be used for the introduction of volatile organics from solid samples (Method 5021) into the GC/MS system.

8.1.5. Cartridge desorption - this technique may be for the introduction of volatile organics from sorbent cartridges (Method 5041) used in the sampling of air. The sorbent cartridges are from the volatile organics sampling train (VOST) or SMVOC (Method 0031).

8.2. Chromatographic conditions

8.2.1. General conditions
Injector temperature: 200 – 225°C
Transfer line temperature: 250 – 300°C

8.2.2. Column 1 and Column 2 with cryogenic cooling
Carrier gas (He) flow rate: 15 mL/min
Initial temperature: 10°C, hold for 5 minutes
Temperature program: 6°C/min to 70°C, then 15°C/min to 145°C
Final temperature: 145°C, hold until all expected compounds have eluted.

8.2.3. Direct injection - Column 2
Carrier gas (He) flow rate: 4 mL/min
Column: J&W DB-624, 70m x 0.53 mm
Initial temperature: 40°C, hold for 3 minutes
Temperature program: 8°C/min
Final temperature: 260°C, hold until all expected compounds have eluted.
Column Bake out: 75 minutes
Injector temperature: 200-225°C
Transfer line temperature: 250-300°C

8.2.4. Direct split interface - Column 4
Carrier gas (He) flow rate: 1.5 mL/min
Initial temperature: 35°C, hold for 2 minutes
Temperature program: 4°C/min to 50°C
10EC/min to 220°C
Final temperature: 220°C, hold until all expected compounds have eluted
Split ratio: 100:1
Injector temperature: 125°C

8.3. Initial calibration

Establish the GC/MS operating conditions.
Mass range: 35 - 260 amu
Scan time: 0.6 - 2 sec/scan
Source temperature: According to manufacturer's specifications Ion trap only: Set axial modulation, manifold temperature, and emission current to manufacturer's recommendations.

8.3.1. Each GC/MS system must be hardware-tuned to meet the criteria in Table 4 for a 5-50 ng injection or purging of 4-bromofluorobenzene (2-µL injection of the BFB standard). Analyses must not begin until these criteria are met.

8.3.1.1. The mass spectrum of BFB will be acquired in the following manner. Three scans (the peak apex scan and the scans immediately preceding and following the apex) are acquired and averaged. Background subtraction is required, and must be accomplished using a single scan no more than 20 scans prior to the elution of BFB. Do not background subtract part of the BFB peak.

8.3.1.2. Use the BFB mass intensity criteria in Table 4 as tuning acceptance criteria. *Alternatively, other documented tuning criteria may be used (e.g., CLP, Method* 524.2, or manufacturer's instructions), provided that method performance is not adversely affected.

NOTE: *All subsequent standards, samples, MS/MSDs, LCSs, and blanks associated with a BFB analysis must use identical mass spectrometer instrument conditions.*

8.3.2. Set up the sample introduction system as outlined in the method of choice (see Sec. 8.1). A different calibration curve is necessary for each method because of the differences in conditions and equipment. A set of at least five different calibration standards is necessary (see Sec. 6.12). Calibration must be performed using the sample introduction technique that will be used for samples. For Method 5030, the purging efficiency for 5 mL of water is greater than for 25 mL. Therefore, develop the standard curve with whichever volume of sample that will be analyzed. The typical volume is 5 mL.

8.3.2.1. To prepare a calibration standard, add an appropriate volume of a secondary dilution standard solution to an aliquot of organic-free reagent water in a volumetric flask. Use a micro syringe and rapidly inject the alcoholic standard into the expanded area of the filled volumetric flask. Remove the needle as quickly as possible after injection. Mix by inverting the flask three times only. Discard the contents contained in the neck of the flask. Aqueous standards are not stable and should be prepared daily. Transfer 5.0 mL (or 25 mL if lower detection limits are required) of each standard to a gas tight syringe along with 10 µL of internal standard. Then transfer the contents to the appropriate device or syringe. Some of the introduction methods may have specific guidance on the volume of calibration standard and the way the standards are transferred to the device.

8.3.2.2. The internal standards selected in Section 6.10 should permit most of the *components of interest in a chromatogram to have retention times of 0.80 - 1.20,* relative to one of the internal standards. Use the base peak ion from the specific internal standard as the primary ion for quantitation (see Table 1). If interferences are noted, use the next most intense ion as the quantitation ion.

8.3.2.3. To prepare a calibration standard for direct injection analysis of waste oil, dilute standards in hexadecane.

8.3.3. Proceed with the analysis of the calibration standards following the procedure in the introduction method of choice. For direct injection, inject 1 - 2 µL into the GC/MS system. The injection volume will depend upon the chromatographic column chosen and the tolerance of the specific GC/MS system to water.

8.3.4. Tabulate the area response of the characteristic ions (see Table 5) against the concentration for each target analyte and each internal standard. Calculate response factors (RF) for each target analyte relative to one of the internal standards. The internal standard selected for the calculation of the RF for a target analyte will be the internal

standard that has a retention time closest to the analyte being measured (Sec. 8.6.2). The RF is calculated as follows:

$$RF = \frac{A_s \times C_{is}}{A_{is} \times C_s}$$

Where:

A_s = Peak area (or height) of the analyte or surrogate
A_{is} = Peak area (or height) of the internal standard
C_s = Concentration of the analyte or surrogate
C_{is} = Concentration of the internal standard

8.3.5. System performance check compounds (SPCCs) - Calculate the mean RF for each target analyte using the five RF values calculated from the initial (5-point) calibration curve. A system performance check will be made before this calibration curve is used. Five compounds (the System Performance Check Compounds, or SPCCs) are checked for a minimum average response factor. These compounds are chloromethane; 1,1-dichloroethane; bromoform; chlorobenzene; and 1,1,2,2-tetrachloroethane. These compounds are used to check compound instability and to check for degradation caused by contaminated lines or active sites in the system. Example problems include:

8.3.5.1. Chloromethane is the most likely compound to be lost if the purge flow is too fast.

8.3.5.2. Bromoform is one of the compounds most likely to be purged very poorly if the purge flow is too slow. Cold spots and/or active sites in the transfer lines may adversely affect response. Response of the quantitation ion (m/z 173) is directly affected by the tuning of BFB at ions m/z 174/176. Increasing the m/z 174/176 ratio relative to m/z 95 may improve bromoform response.

8.3.5.3. Tetrachloroethane and 1,1-dichloroethane are degraded by contaminated transfer lines in purge-and-trap systems and/or active sites in trapping materials.

8.3.5.4. The minimum mean response factors for the volatile SPCCs are as follows:

Chloromethane	0.10
1,1-Dichloroethane	0.10
Bromoform	0.10
Chlorobenzene	0.30
1,1,2,2-Tetrachloroethane	0.30

8.3.6. Calibration check compounds (CCCs)

8.3.6.1. The purpose of the CCCs are to evaluate the calibration from the standpoint of the integrity of the system. High variability for these compounds may be indicative of system leaks or reactive sites on the column. Meeting the CCC criteria is not a substitute for successful calibration of the target analytes using one of the approaches described in Section 7.0 of Method 8000.

8.3.6.2. Calculate the standard deviation (SD) and relative standard deviation (RSD) of the response factors for all target analytes from the initial calibration, as follows:

$$SD = \sqrt{\frac{\sum_{i=1}^{n}\left(RF_i - \overline{RF}\right)^2}{n-1}} \qquad RSD = \frac{SD}{\overline{RF}} \times 100$$

Where:

RF_i	=	RF for each of the calibration standards
$\overline{RF}$	=	mean RF for each compound from the initial calibration
n	=	Number of calibration standards, e.g., 5

8.3.6.3. The RSD should be less than or equal to 15% for each target analyte. However, the RSD for each individual Calibration Check Compound (CCC) must be equal or less than 30%. If the CCCs are not included in the list of analytes for a project, and therefore not included in the calibration standards, refer to Section 7.0 of Method 8000. The CCCs are:

1,1-Dichloroethene	Toluene
Chloroform	Ethylbenzene
1,2-Dichloropropane	Vinyl chloride

8.3.6.4. If an RSD of greater than 30% is measured for any CCC, then corrective action to eliminate a system leak and/or column reactive sites is necessary before reattempting calibration.

8.3.7. Evaluation of retention times - The relative retention times of each target analyte in each calibration standard will agree within 0.06 relative retention time units. Late-eluting compounds usually have much better agreement.

8.3.8. Linearity of target analytes

8.3.8.1. If the RSD of any target analyte is 15% or less, then the response factor is assumed to be constant over the calibration range, and the average response factor may be used for quantitation (Sec. 8.7.2).

8.3.8.2. If the RSD of any target analyte is greater than 15%, refer to Sec. 7.0 of Method 8000 for additional calibration options. One of the options must be applied to GC/MS calibration in this situation, or a new initial calibration must be performed.

NOTE: *Method 8000 specifies a linearity criterion of 20% RSD. That criterion pertains to GC and HPLC methods other than GC/MS. Method 8260B requires 15% RSD as evidence of sufficient linearity to employ an average response factor.*

8.3.8.3. When the RSD exceeds 15%, the plotting and visual inspection of a calibration curve can be a useful diagnostic tool. The inspection may indicate analytical

problems, including errors in standard preparation, the presence of active sites in the chromatographic system, analytes that exhibit poor chromatographic behavior, etc.

NOTE: *The 20% RSD criteria in Method 8000 pertains to GC and HPLC methods other than GC/MS. Method 8260B requires 15% RSD.*

8.4. GC/MS calibration verification - Calibration verification consists of three steps that are performed at the beginning of each 12-hour analytical shift.

8.4.1. Prior to the analysis of samples or calibration standards, inject or introduce 5-50 ng of the 4-bromofluorobenzene standard into the GC/MS system. The resultant mass spectra for the BFB must meet the criteria given in Table 4 before sample analysis begins. These criteria must be demonstrated each 12-hour shift during which samples are analyzed.

8.4.2. The initial calibration curve (Sec. 8.3) for each compound of interest will be verified once every 12 hours prior to sample analysis, using the introduction technique used for samples. This is accomplished by analyzing a calibration standard at a concentration near the midpoint concentration for the calibrating range of the GC/MS. The results from the calibration standard analysis will meet the verification acceptance criteria provided in Section. 8.4.4 through 8.4.7.

NOTE: *The BFB and calibration verification standard may be combined into a single standard as long as both tuning and calibration verification acceptance criteria for the project can be met without interferences.*

8.4.3. A method blank (3.15) will be analyzed after the calibration standard, or at any other time during the analytical shift, to ensure that the total system (introduction device, transfer lines and GC/MS system) is free of contaminants. If the method blank indicates contamination, then it may be appropriate to analyze a solvent blank to demonstrate that the contamination is not a result of carryover from standards or samples.

8.4.4. System Performance Check Compounds (SPCCs)

8.4.4.1. A system performance check must be made during every 12-hour analytical shift. Each SPCC compound in the calibration verification standard must meet its minimum response factor (see Sec. 8.3.5.4). This is the same check that is applied during the initial calibration.

8.4.4.2. If the minimum response factors are not met, the system must be evaluated, and corrective action must be taken before sample analysis begins. Possible problems include standard mixture degradation, injection port inlet contamination, contamination at the front end of the analytical column, and active sites in the column or chromatographic system. This check must be met before sample analysis begins.

8.4.5. Calibration Check Compounds (CCCs)

8.4.5.1. After the system performance check is met, the CCCs listed in Section 8.3.6 are used to check the validity of the initial calibration. Use percent difference when performing the average response factor model calibration. Use percent drift when calibrating using a regression fit model.

8.4.5.2. If the percent difference or drift for each CCC is less than or equal to 20%, the initial calibration is assumed to be valid. If the criterion is not met (i.e., greater than 20% difference or drift), for any one CCC, then corrective action must be taken prior to the analysis of samples. If the CCC's are not included in the list of analytes for a project, and therefore not included in the calibration standards, then all analytes must meet the 20% difference or drift criterion.

8.4.5.3. Problems similar to those listed under SPCCs could affect the CCCs. If the problem cannot be corrected by other measures, a new five-point initial calibration must be generated. The CCC criteria must be met before sample analysis begins.

8.4.6. Internal standard retention time - The retention times of the internal standards in the calibration verification standard must be evaluated immediately after or during data acquisition. If the retention time for any internal standard changes by more than 30 seconds from that in the mid-point standard level of the most recent initial calibration sequence, then the chromatographic system must be inspected for malfunctions and corrections must be made, as required. When corrections are made, reanalysis of samples analyzed while the system was malfunctioning is required.

8.4.7. Internal standard response - If the EICP area for any of the internal standards in the calibration verification standard changes by a factor of two (-50% to + 100%) from that in the mid-point standard level of the most recent initial calibration sequence, the mass spectrometer must be inspected for malfunctions and corrections must be made, as appropriate. When corrections are made, reanalysis of samples analyzed while the system was malfunctioning is required.

8.5. GC/MS analysis of samples

8.5.1. It is highly recommended that the sample be screened to minimize contamination of the GC/MS system from unexpectedly high concentrations of organic compounds. Some of the screening options available utilizing SW-846 methods are automated headspace-GC/FID (Methods 5021/8015), automated headspace-GC/PID/ELCD (Methods 5021/8021), or waste dilution-GC/PID/ELCD (Methods 3585/8021) using the same type of capillary column. When used only for screening purposes, the quality control requirements in the methods above may be reduced as appropriate. Sample screening is particularly important when Method 8260 is used to achieve low detection levels.

8.5.2. BFB tuning criteria and GC/MS calibration verification criteria must be met before analyzing samples.

8.5.3. All samples and standard solutions must be allowed to warm to ambient temperature before analysis. Set up the introduction device as outlined in the method of choice.

8.5.4. The process of taking an aliquot destroys the validity of remaining volume of an aqueous sample for future analysis. Therefore, if only one VOA vial is provided to the laboratory, the analyst will prepare two aliquots for analysis at this time, to protect against possible loss of sample integrity. This second sample is maintained only until such time when the analyst has determined that the first sample has been analyzed properly. For aqueous samples, one 20-mL syringe could be used to hold two 5-mL aliquots. If the second aliquot is to be taken from the syringe, it must be analyzed within 24 hours. Care must be taken to prevent air from leaking into the syringe.

8.5.5. Remove the plunger from a 5-mL syringe and attach a closed syringe valve. Open the sample or standard bottle, which has been allowed to come to ambient temperature, and carefully pour the sample into the syringe barrel to just short of overflowing. Replace the syringe plunger and compress the sample. Open the syringe valve and vent any residual air while adjusting the sample volume to 5.0 mL. If lower detection limits are required, use a 25- mL syringe, and adjust the final volume to 25.0 mL.

8.5.6. The following procedure may be used to dilute aqueous samples for analysis of volatiles. All steps must be performed without delays, until the diluted sample is in a gas-tight syringe.

8.5.6.1. Dilutions may be made in volumetric flasks (10- to 100-mL). Select the volumetric flask that will allow for the necessary dilution. Intermediate dilution steps may be necessary for extremely large dilutions.

8.5.6.2. Calculate the approximate volume of organic-free reagent water to be added to the volumetric flask, and add slightly less than this quantity of organic-free reagent water to the flask.

8.5.6.3. Inject the appropriate volume of the original sample from the syringe into the flask. Aliquots of less than 1 mL are not recommended. Dilute the sample to the mark with organic-free reagent water. Cap the flask, invert, and shake three times. Repeat above procedure for additional dilutions.

8.5.6.4. Fill a 5-mL syringe with the diluted sample, as described in Sec. 8.5.5.

8.5.7. Compositing aqueous samples prior to GC/MS analysis

8.5.7.1. Add 5 mL of each sample (up to 5 samples are allowed) to a 25-mL glass syringe. Special precautions must be made to maintain zero headspace in the syringe. Larger volumes of a smaller number of samples may be used, provided that equal volumes of each sample are composited.

8.5.7.2. The samples must be cooled to 4°C or less during this step to minimize volatilization losses. Sample vials may be placed in a tray of ice during the processing.

8.5.7.3. Mix each vial well and draw out a 5-mL aliquot with the 25-mL syringe.

8.5.7.4. Once all the aliquots have been combined on the syringe, invert the syringe several times to mix the aliquots. Introduce the composited sample into the instrument, using the method of choice (see Sec. 8.1).

8.5.7.5. If less than five samples are used for compositing, a proportionately smaller syringe may be used, unless a 25-mL sample is to be purged.

8.5.8. Add 10 µL of the surrogate spiking solution and 10 µL of the internal standard spiking solution (Section 6.7) to each sample either manually or by autosampler. The surrogate and internal standards may be mixed and added as a single spiking solution. If a more sensitive mass spectrometer is employed to achieve lower detection levels, more dilute surrogate and internal standard solutions may be required.

8.5.9. Add 10 µL of the matrix spike solution (Section 6.14) to a 5-mL aliquot of the sample chosen for spiking, disregarding any dilutions.

8.5.9.1. Follow the same procedure in preparing the laboratory control sample (LCS), except the spike is added to a clean matrix. See Section 9.4 and Method 5000 for more guidance on the selection and preparation of the matrix spike and the LCS.

8.5.9.2. If a more sensitive mass spectrometer is employed to achieve lower detection levels, more dilute matrix spiking and LCS solutions may be required.

8.5.10. Analyze the sample following the procedure in the introduction method of choice.

8.5.10.1. For direct injection, inject 1 to 2 µL into the GC/MS system. The volume limitation will depend upon the chromatographic column chosen and the tolerance of the specific GC/MS system to water (if an aqueous sample is being analyzed).

8.5.10.2. The concentration of the internal standards, surrogates, and matrix spiking standards (if any) added to the injection aliquot must be adjusted to provide the same concentration in the 1-2 µL injection as would be introduced into the GC/MS by purging a 5-mL aliquot.

8.5.11. If the initial analysis of the sample or a dilution of the sample has a concentration of any analyte that exceeds the initial calibration range, the sample must be reanalyzed at a higher dilution. Secondary ion quantitation is allowed only when there are sample interferences with the primary ion.

8.5.11.1. When ions from a compound in the sample saturate the detector, this analysis must be followed by the analysis of an organic-free laboratory reagent water (3.12) blank. If the blank analysis is not free of interferences, then the system must be decontaminated. Sample analysis may not resume until the blank analysis is demonstrated to be free of interferences.

8.5.11.2. All dilutions will keep the response of the major constituents (previously saturated peaks) in the upper half of the linear range of the curve.

8.5.12. The use of selected ion monitoring (SIM) is acceptable in situations requiring detection limits below the normal range of full EI spectra. However, SIM may provide a lesser degree of confidence in the compound identification unless multiple ions are monitored for each compound.

8.6. Qualitative analysis

8.6.1. The qualitative identification of each compound determined by this method is based on retention time, and on comparison of the sample mass spectrum, after background correction, with characteristic ions in a reference mass spectrum. The reference mass spectrum must be generated by the laboratory using the conditions of this method. The characteristic ions from the reference mass spectrum are defined to be the three ions of greatest relative intensity, or any ions over 30% relative intensity if less than three such ions occur in the reference spectrum. Compounds are identified as present when the following criteria are met.

8.6.1.1. The intensities of the characteristic ions of a compound maximize in the same scan or within one scan of each other. Selection of a peak by a data system target compound search routine where the search is based on the presence of a target chromatographic peak containing ions specific for the target compound at a compound-specific retention time will be accepted as meeting this criterion.

8.6.1.2. The relative retention time (RRT) of the sample component is within ± 0.06 RRT units of the RRT of the standard component.

8.6.1.3. The relative intensities of the characteristic ions agree within 30% of the relative intensities of these ions in the reference spectrum. (Example: For an ion with an abundance of 50% in the reference spectrum, the corresponding abundance in a sample spectrum can range between 20% and 80%).

8.6.1.4. Structural isomers that produce very similar mass spectra should be identified as individual isomers if they have sufficiently different GC retention times. Sufficient GC resolution is achieved if the height of the valley between two isomer peaks is less than 25% of the sum of the two peak heights. Otherwise, structural isomers are identified as isomeric pairs.

8.6.1.5. Identification is hampered when sample components are not resolved chromatographically and produce mass spectra containing ions contributed by more than one analyte. When gas chromatographic peaks obviously represent more than one sample component (i.e., a broadened peak with shoulder(s) or a valley between two or more maxima), appropriate selection of analyte spectra and background spectra is important.

8.6.1.6. Examination of extracted ion current profiles of appropriate ions can aid in the selection of spectra, and in qualitative identification of compounds. When analytes co-elute (i.e., only one chromatographic peak is apparent), the identification criteria may be met, but each analyte spectrum will contain extraneous ions contributed by the coeluting compound.

8.6.2. For samples containing components not associated with the calibration standards, a library search may be made for the purpose of tentative identification. The necessity to perform this type of identification will be determined by the purpose of the analyses being conducted. Data system library search routines should not use normalization routines that would misrepresent the library or unknown spectra when compared to each other. For example, the RCRA permit or waste delisting requirements may require the reporting of non-target analytes. Only after visual comparison of sample spectra with the nearest library searches may the analyst assign a tentative identification. Use the following guidelines for making tentative identifications:

1) Relative intensities of major ions in the reference spectrum (ions greater than 10% of the most abundant ion) should be present in the sample spectrum.

2) The relative intensities of the major ions should agree within ± 20%. (Example: For an ion with an abundance of 50% in the standard spectrum, the corresponding sample ion abundance must be between 30 and 70%).

3) Molecular ions present in the reference spectrum should be present in the sample spectrum.

4) Ions present in the sample spectrum but not in the reference spectrum should be reviewed for possible background contamination or presence of coeluting compounds.

5) Ions present in the reference spectrum but not in the sample spectrum should be reviewed for possible subtraction from the sample spectrum because of background contamination or coeluting peaks. Data system library reduction programs can sometimes create these discrepancies.

8.7. Quantitative analysis

8.7.1. Once a compound has been identified, the quantitation of that compound will be based on the integrated abundance from the EICP of the primary characteristic ion. The internal standard used shall be the one nearest the retention time of that of a given analyte.

8.7.2. If the RSD of a compound's response factors is 15% or less, then the concentration in the extract may be determined using the average response factor (&R &F) from initial calibration data (8.3.6). See Method 8000, Sec. 7.0, for the equations describing internal standard calibration and either linear or non-linear calibrations.

8.7.3. Where applicable, the concentration of any non-target analytes identified in the sample (Section 8.6.2) will be estimated. The same formulae will be used with the following modifications: The areas As and Ais will be from the total ion chromatograms, and the RF for the compound will be assumed to be 1.

8.7.4. The resulting concentration will be reported indicating: (1) that the value is an estimate, and (2) which internal standard was used to determine concentration. Use the nearest internal standard free of interferences.

9.0 QUALITY CONTROL

9.1. Instrument Quality Control

9.1.1. The GC/MS system must be tuned to meet the BFB specifications in Table 2.(Table 4 of the method). If the BFB specifications are not met, the system must be readjusted to manufacturer's specifications and the BFB reanalyzed. Samples cannot be analyzed under a failed BFB.

9.1.2. Calibration

9.1.2.1. Linear Curves

9.1.2.1.1. The percent RSD for each compound should be 15% or less, however the RSD for each calibration check compound must be less than 30%. The CCCs are 1,1-dichloroethene, chloroform, 1,2-dichloropropane, toluene ethylbenzene and vinyl chloride. The initial calibration must be prepared again and reanalyzed if the RSDs for the CCCs are 30% or greater.

9.1.2.1.2. The GC/MS system must meet the SPCC criteria and the CCC criteria:

- The minimum mean response factors for the volatile SPCCs are 0.10 for chloromethane, 1,1-dichloroethane and bromoform and 0.30 for chlorobenzene and 1,1,2,2,-tetrachloroethane.
- The percent difference for each CCC must be less than 20%.

9.1.2.1.3. If a calibration check after the system check does not meet the criteria, a recalibration must be performed. If the recalibration does not meet the established criteria, new calibration standards must be made.

9.1.2.2. Non-linear curves

9.1.2.2.1. See Method 8000C, Section 9, for non-linear curve QC requirements. The following criteria apply:

- Non linear curves must consist of 6 or more points
- Non-linear curves must have a coefficient greater than 0.99 for each analyte.

9.2. Sample Quality Control

9.2.1. Method Blank (3.15):

A method blank must be analyzed with each sample set of not more than 20 samples. The method blank must be free of contamination of any target analyte. If the method blank shows contamination above 5% of the sample results for the same analyte, the blank will be re-extracted and reanalyzed. If the blank cannot meet criteria, the data must be flagged as having blank contamination.

9.2.2. Laboratory Control Spikes (3.16):

A laboratory control spike (LCS) should be included with each analytical batch. The LCS consists of an aliquot of a clean (control) matrix similar to the sample matrix and of the same weight or volume. The LCS is spiked with the same analytes at the same concentrations as the matrix spike. When the results of the matrix spike analysis indicate a potential problem due to the sample matrix itself, the LCS results are used to verify that the laboratory can perform the analysis in a clean matrix. The recoveries for the compounds in the laboratory control spikes must be within the laboratory's statistically derived QC limits.

9.2.3. Matrix Spikes (3.18):

Matrix spikes must be analyzed with each sample set unless the matrix does not allow for a split for spiking. The recoveries for the compounds in the matrix spike samples must be within the laboratory's statistically derived QC limits or 70% to 130% if no limits are available.

9.2.4. Surrogates (3.28):

Surrogates must be added to each sample and to each QC sample. The surrogate recoveries must be within the laboratory's statistically derived QC limits. The laboratory limits for VOST tubes prepared from Method 0030 are listed in Table 7.

9.3. Initial Demonstration of Proficiency – Each analyst will demonstrate initial proficiency with each sample preparation and determinative method combination it utilizes, by generating data of acceptable accuracy and precision for target analytes in a clean matrix.

9.4. Each day that analysis is performed, the calibration verification standard will be evaluated to determine if the chromatographic system is operating properly. Questions that should be asked are: Do the peaks look normal? Is the response obtained comparable to the response from previous calibrations? Careful examination of the standard chromatogram can indicate whether the column is still performing acceptably, the injector is leaking, the injector septum needs replacing, etc. If any changes are made to the system (e.g., the column changed), recalibration of the system must take place.

10.0 METHOD PERFORMANCE

10.1. The method detection limit (MDL) is defined as the minimum concentration of a substance that can be measured and reported with 99% confidence that the value is above zero. MDls have been established using DAT SOP 133.

10.2. DAT's statistically derived QC limits for laboratory spike recoveries are listed in Table 6. DAT's statistically derived QC limits for surrogate recoveries for VOST samples are listed in Table 7.

11.0 SAFETY PRECAUTIONS

11.1. All personnel are required to comply with DAT's Health and Safety Documents as described in the Quality Assurance Manual.

11.2. Standard laboratory practices must be followed. Safety glasses and disposable gloves are required if a sample or extract is to be handled directly (e.g. pouring a sample, diluting an extract, taking a pH).

11.3. The chemicals used in this procedure may be toxic or carcinogenic. Therefore, each chemical compound should be treated as a potential health hazard. From this viewpoint, exposure to these chemicals will be reduced to the lowest possible level.

12.0 CALCULATIONS:

12.1. When a compound has been identified, the quantitation of that compound will be based on the integrated abundance from the EICP of the primary characteristic ion. Quantitation will take place using the internal standard technique. The internal standard used shall be the one nearest the retention time of that of a given analyte.

12.2. When linearity exists, calculate the concentration of each identified analyte in the sample as follows:

$$\text{Concentration } (\mu g/L) = \frac{(A_x)(I_s)}{(A_{is})(RF)(V_o)}$$

Where:

A_x	=	Area of characteristic ion for compound being measured
I_s	=	Amount of internal standard injected (ng)
A_{is}	=	Area of characteristic ion for the internal standard
RF	=	Mean relative response factor for compound being measured
V_o	=	Volume of water purged (mL), taking into consideration any dilutions made

Sediment/Soil Sludge (on a dry-weight basis) and Waste (normally on a wet-weight basis)

$$\text{Concentration } (\mu g/kg) = \frac{(A_x)(I_s)(V_t)}{(A_{is})(RF)(V_i)(W_s)(D)}$$

Where:

A_s, I_s, A_{is}, RF = Same as for water

V_t = Volume of total extract (µL) (USE 10,000 µL or a factor of this when dilutions are made)
V_i = Volume of extract added (µL) for purging
W_s = Weight of sample extracted or purged (g)
D = % dry weight of sample/100, or 1 for a wet-weight basis

Where % solids = [(dry weight) / (wet weight)] * 100

12.3. Where applicable, an estimate of concentration for noncalibrated components in the sample should be made. The formulas given above should be used with the following modifications: The areas Ax and Ais should be from the total ion chromatograms and the RF for the compound should be assumed to be 1. The concentration obtained should be reported indicating (1) that the value is an estimate and (2) which internal standard was used to determine concentration. Use the nearest internal standard free of interferences.

12.4. Alternatively, the regression line fitted to the initial calibration may be used for determination of analyte concentration.

12.5. $$\% \text{ Total Solids} = \frac{D}{S} \times 100$$

Where:
D = dry sample (weight of crucible/dry sample-crucible wt.
S = wet sample (weight of crucible/wet sample-crucible wt.

12.5.1. The procedure below is used to determine the % total solids:

- Weigh a crucible on an analytical balance and record the weight
- Put an amount of solid sample into the pre-weighed crucible and record weight
- Dry in an oven at 105°C for 18 hours. Place in a desiccator to cool
- Weigh the dried sample and crucible. Use the calculation in Section 12.5 to determine the % solids

12.6. The relative percent difference (RPD) of any duplicate sample results is calculated as follows:

$$RPD = \frac{S_1 - S_2}{(S_1 + S_2)/2} \quad 100$$

S_1 and S_2 represent sample and duplicate sample results.

12.7. Calculation of percent recovery

Accuracy is estimated from the recovery of spiked analytes from the matrix of interest. Laboratory performance in a clean matrix is estimated from the recovery of analytes in the LCS. Calculate the recovery of each spiked analyte in the matrix spike, matrix spike duplicate (if performed) and LCS according to the following formula:

$$\text{Recovery} = \%R = \frac{C_s - C_u}{C_n}$$

Where:

C_s = Measured concentration of the spiked sample aliquot

C_u = Measured concentration of the unspiked sample aliquot (use 0 for the LCS)

C_n = Nominal (theoretical) concentration increase that results from spiking the sample, or the nominal concentration of the spiked aliquot (for LCS).

13.0 CORRECTIVE ACTIONS AND CONTINGENCIES

13.1. Raw data that is reported under failed QC criteria must be flagged as such. The analyst must provide an explanation of the corrective actions attempted and/ or applied and the reason for the flagged data.

14.0 WASTE MANAGEMENT

14.1. All appropriate pollution prevention procedures and waste management procedures as described in the DAT Waste Management Plan must be utilized by all personnel involved in the preparation and analysis of samples.

15.0 REFERENCES

15.1. U.S. EPA Method 8260B, Volatile Organic Compounds By Gas Chromatography/Mass Spectrometry: Capillary Column Technique. Revision 2, January 1995.

15.2. U.S. EPA Method 8000B, Determinative Chromatographic Separations, Revision 2, December 1996

15.3. Data/Analysis Technologies, Quality Assurance Manual, Revision 4.2, September 2005.

15.4. Data/Analysis Technologies, Waste Management Plan, Revision 3, September 2001.

APPENDIX I

START-UP AND ANALYSIS TECHNIQUES FOR THE FINNIGAN 4500 GC/MS WITH HEWLETT PACKARD 5890 GAS CHROMATOGRAPH

I. Start-UP

A. Boil 2000 mL of RO/DI down to 1000 mL. Remove from heat and pour into a 1 liter narrow mouth bottle. Let cool for 10 minutes then place under water in sink until cool.

B. Run BFB Tune:

1. Go to Galaxy pop up menu and select autosequence.
2. Type in analysis sequence using the 8260 tune and the 8260 scan functions.
3. GO to start acquisition.
4. The system will load the GC program. SETPOINT FILE LOADED will appear on the GC. Then the message waiting for GC ready will appear and blink.
5. Add 5-50 ng of BFB to 5 mL clean water and start purge program.
6. Check the purge flow using the bubble meter at the vent outlet. Flow should be between 35 and 45 mL/min.
7. The acquisition will start when the GC oven is at the set temperature and the purge and trap goes into DESORB.

C. Check the BFB spectrum:

1. Load BFB Tune spectrum
2. Check the spectrum. Place the cursor on the peak and press the mouse right button.
3. The spectrum must meet criteria established by the EPA. If it fails, notify the supervisor.

Print the chromatogram, the mass spectrum and the mass list. Place in the calibration file for the project.

II. Initial Calibration

ICAL requirements are shown in Sections 8.3.5 through 8.3.8 and in Section 9.1.2

III. ConCal procedure:

1. Using the same procedure outlined in Section II, make up a mid point calibration check at one of the mid level standards in the ICAL (usually 120 ng) and purge.

2. Set up the system for analysis during the purge cycle:

3. Process the ConCal after acquisition using the initial calibration curve.

4. Check the SPCC and CCC compounds to determine if the CCAL passes: (20% Drift max)

   a. If all pass, analyze the blank.

   b. If SPCC or CCC fails:

      1) check chromatogram;

      2) check integration of peaks if necessary;

      3) rerun the CCAL; and/or recalibrate if needed

5. Obtain a copy of the total ion chromatogram to include in the CCAL folder. Print the quant file for inclusion in the folder.

IV. Blank analysis procedure:

1. Add 10 uL of the internal standard/surrogate spike solution mix to 5 mL of clean water and add to the sparger.

2. Set up for analysis during the purge cycle.

3. Process the blank after acquisition.

   a. Check internal standard and surrogate recoveries to determine if the blank passes method criteria. All compounds must be below method detection limits.

Except CH_2Cl_2, carbon disulfide, Toluene, acetone and to Butanone which may exceed up to 5 times detection limit (10 ng). If the blank passes, the samples may be analyzed.

V. Sample analysis procedure: Soil and Water

1. Weigh out 5 g (mL) of a well-mixed sample into the sparger. Do not expose to the atmosphere any more than is necessary. Record the exact weight (to the nearest 0.1 g, mL).

2. Put the sparger on the LSC-2000 or 2016 autosampler. If soil, adjust the needle to ½ inch above the soil surface so it won't get plugged.

3. Add 10 uL each of internal standard/surrogate solution mix to 5 mL of clean water and add to the sparger. If soil attach the heater sleeve and start the purge cycle.

4. Set up for analysis same as for blank. Process when the next sample is acquiring in the same manner as for the blank. Consult the supervisor and/or EPA method for QC criteria for samples.

CAUTION: If in manual mode, the sparge apparatus must be cleaned after each run during the desorb cycle. The sparge tube should be inserted into nut and pulled back slightly before tightening to prevent breakage of the tube.

VI. Water Analysis Procedure

A. Attach water sparger to LSC 2000 or use needle sparger on the 2016.

1. Rinse syringe once with the sample. Pour the sample into the syringe until it overflows, insert plunger, and adjust to 5 mL. There should be no air bubbles.

2. Add 10 uL of the internal standard/surrogate solution mix to the sample in the syringe. Put into the sparger and start the purge cycle.

3. Set up the system for analysis during or prior to the purge cycle. Process during the next acquisition in the same manner as for the soil samples.

VII. Tedlar Bag Analysis

1. Attach water sparger to LSC 2000 or use needle sparger on the 2016.

2. Calibrate the purge flow controller using a soap bubble meter at the outlet of the pump. Optionally install a flow meter between the flow controller and the LSC 2000 system vent. Adjust the flow controller to 50 mL/min. Attach the bag to the sparger inlet, keeping the bag valve shut. Evacuate the sparger and the associated transfer tubing using a 20 mL gastight syringe.

3. To 5 mL of purge and trap grade water add the internal standard surrogate mix (200 ng). Place into the sparger. Turn sparger valve to the bag inlet and open the bag. Gas should be observed bubbling into the sparger. Liquid should not back up into the tubing. The sparger must be at atmospheric pressure prior to gas sampling. If using a 2016 autosampler do this for the remainder of the samples.

Optional: Set up the system for analysis during or prior to the purge cycle. Process during the next acquisition in the same manner as for the soil samples.

TABLE 1
CHROMATOGRAPHIC RETENTION TIMES AND METHOD DETECTION LIMITS (MDL) FOR VOLATILE ORGANIC COMPOUNDS ON WIDE-BORE CAPILLARY COLUMNS

Compound	Retention Time (minutes)			MDL[d]
	Column 1[a]	Column 2[b]	Column 2"[c]	(µg/L)
Dichlorodifluoromethane	1.35	0.70	3.13	0.10
Chloromethane	1.49	0.73	3.40	0.13
Vinyl Chloride	1.56	0.79	3.93	0.17
Bromomethane	2.19	0.96	4.80	0.11
Chloroethane	2.21	1.02	--	0.10
Trichlorofluoromethane	2.42	1.19	6.20	0.08
Acrolein	3.19			
Idomethane	3.56			
Acetonitrile	4.11			
Carbon disulfide	4.11			
Allyl chloride	4.11			
Methylene chloride	4.40	2.06	9.27	0.03
1,1-Dichloroethene	4.57	1.57	7.83	0.12
Acetone	4.57			
trans-1,2-Dichloroethene	4.57	2.36	9.90	0.06
Acrylonitrile	5.00			
1,1-Dichloroethane	6.14	2.93	10.80	0.04
Vinyl acetate	6.43			
2,2-Dichloropropane	8.10	3.80	11.87	0.35
2-Butanone	--			
cis-1,2-Dichloroethene	8.25	3.90	11.93	0.12
Propionitrile	8.51			
Chloroform	9.01	4.80	12.60	0.03
Bromochloromethane	--	4.38	12.37	0.04
Methacrylonitrile	9.19			
1,1,1-Trichloroethane	10.18	4.84	12.83	0.08
Carbon tetrachloride	11.02	5.26	13.17	0.21
1,1-Dichloropropene	--	2.59	13.10	0.10
Benzene	11.5	5.67	13.50	0.04
1,2-Dichloroethane	12.09	5.83	13.63	0.06
Trichloroethene	14.03	7.27	14.80	0.19
1,2-Dichloropropane	14.51	7.66	15.20	0.04
Bromodichloromethane	15.39	8.49	15.80	0.08
Dibromomethane	15.43	7.93	5.43	0.24
Methyl methacrylate	15.50			
1,4-Dioxane	16.17			
2-Chloroethyl vinyl ether	--			
4-Methyl-2-pentanone	17.32			
trans-1,3-Dichloropropene	17.47	--	16.70	--
Toluene	18.29	10.00	17.40	0.11
cis-1,3-Dichloropropene	19.38	--	17.90	--

TABLE 1 Continued

CHROMATOGRAPHIC RETENTION TIMES AND METHOD DETECTION LIMITS (MDL) FOR VOLATILE ORGANIC COMPOUNDS ON WIDE-BORE CAPILLARY COLUMNS

Compound	Retention Time (minutes)			MDL[d]
	Column 1[a]	Column 2[b]	Column 2"[c]	(µg/L)
1,1,2-Trichloroethane	19.59	11.05	18.3	0.10
Ethyl methacrylate	20.01			
2-Hexanone	20.30			
Tetrachloroethene	20.26	11.15	18.60	0.14
1,3-Dichloropropane	20.51	11.31	18.70	0.04
Dibromochloromethane	21.19	11.85	19.20	0.05
1,2-Dibromoethane	21.52	11.83	19.40	0.06
1-Chlorohexane	--	13.29	--	0.05
Chlorobenzene	23.17	13.01	20.67	0.04
1,1,1,2-Tetrachloroethane	23.36	13.33	20.87	0.05
Ethylbenzene	23.38	13.39	21.00	0.06
p-Xylene	23.54	13.69	21.30	0.13
m-Xylene	23.54	13.68	21.37	0.05
o-Xylene	25.16	14.52	22.27	0.11
Styrene	25.30	14.60	22.40	0.04
Bromoform	26.23	14.88	22.77	0.12
Isopropylbenzene (Cumene)	26.37	15.46	23.30	0.15
cis-1,4-Dichloro-2-butene	27.12			
1,1,2,2-Tetrachloroethane	27.29	16.35	24.07	0.04
Bromobenzene	27.46	15.86	24.00	0.03
1,2,3-Trichloropropane	27.55	16.23	24.13	0.32
n-Propylbenzene	27.58	16.41	24.33	0.04
2-Chlorotoluene	28.19	16.42	24.53	0.04
trans-1,4-Dichloro-2-butene	28.26			
1,3,5-Trimethylbenzene	28.31	16.90	24.83	0.05
4-Chlorotoluene	28.33	16.72	24.77	0.06
Pentachloroethane	29.41			
1,2,4-Trimethylbenzene	29.47	17.70	31.50	0.13
sec-Butylbenzene	30.25	18.09	26.13	0.13
tert-Butylbenzene	30.59	17.57	26.60	0.14
p-Isopropyltoluene	30.59	18.52	26.50	0.12
1,3-Dichlorobenzene	30.56	18.14	26.37	0.12
1,4-Dichlorobenzene	31.22	18.39	26.60	0.03
Benzyl chloride	32.00			
n-Butylbenzene	32.23	19.49	27.32	0.11
1,2-Dichlorobenzene	32.31	19.17	27.43	0.03
1,2-Dibromo-3-chloropropane	35.3	21.08	--	0.26
1,2,4-Trichlorobenzene	38.19	23.08	31.50	0.04
Hexachlorobutadiene	38.57	23.68	32.07	0.11
Naphthalene	39.05	23.52	32.20	0.04
1,2,3-Trichlorobenzene	40.01	24.18	32.97	0.03

TABLE 1 Continuted

CHROMATOGRAPHIC RETENTION TIMES AND METHOD DETECTION LIMITS (MDL) FOR VOLATILE ORGANIC COMPOUNDS ON WIDE-BORE CAPILLARY COLUMNS

Compound	Retention Time (minutes)			MDL[d]
	Column 1[a]	Column 2[b]	Column 2"[c]	(µg/L)
INTERNAL STANDARDS/SURROGATES				
1,4-Difluorobenzene	13.26			
Chlorobenzene-d_5	23.10			
1,4-Dichlorobenzene-d_4	31.16			
4-Bromofluorobenzene	27.83	15.71	23.63	
1,2-Dichlorobenzene-d_4	32.30	19.08	27.25	
Dichloroethane-d_4	12.08			
Dibromofluoromethane	--			
Toluene-d_8	18.27			
Pentafluorobenzene	--			
Fluorobenzene	13.00	6.27	14.06	

[a] Column 1 - 60 meter × 0.75 mm ID VOCOL capillary. Hold at 10°C for 8 minutes, then program to 180°C at 4°C/min.

[b] Column 2 - 30 meter × 0.53 mm ID DB-624 wide-bore capillary using cryogenic oven. Hold at 10°C for 5 minutes, then program to 160°C at 6°C/min.

[c] Column 2" - 30 meter × 0.53 mm ID DB-624 wide-bore capillary, cooling GC oven to ambient temperatures. Hold at 10°C for 6 minutes, program to 70°C at 10°C/min, program to 120°C at 5°C/min, then program to 180°C at 8°C/min.

[d] MDL based on 25-mL sample volume.

TABLE 2
CHROMATOGRAPHIC RETENTION TIMES AND METHOD DETECTION LIMITS (MDL) FOR VOLATILE ORGANIC COMPOUNDS ON NARROW-BORE CAPILLARY COLUMNS

Compound	Retention Time (minutes) Column 3[a]	MDL[b] (µg/L)
Dichlorodifluoromethane	0.88	0.11
Chloromethane	0.97	0.05
Vinyl Chloride	1.04	0.04
Bromomethane	1.29	0.03
1,1-Dichloroethane	4.03	0.03
cis-1,2-Dichloroethene	5.07	0.06
2,2-Dichloropropane	5.31	0.08
Chloroform	5.55	0.04
Bromochloromethane	5.63	0.09
1,1,1-Trichloroethane	6.76	0.04
1,2-Dichloroethane	7.00	0.02
1,1-Dichloropropene	7.16	0.12
Carbon tetrachloride	7.41	0.02
Benzene	7.41	0.03
1,2-Dichloropropane	8.94	0.02
Trichloroethene	9.02	0.02
Dibromomethane	9.09	0.01
Bromodichloromethane	9.34	0.03
Toluene	11.51	0.08
1,1,2-Trichloroethane	11.99	0.08
1,3-Dichloropropene	12.48	0.08
Dibromochloromethane	12.80	0.07
Tetrachloroethene	13.20	0.05
1,2-Dibromoethane	13.60	0.10
Chlorobenzene	14.33	0.03
1,1,1,-2-Tetrachloroethane	14.73	0.07
Ethylbenzene	14.73	0.03
p-Xylene	15.30	0.06
m-Xylene	15.30	0.03
Bromoform	15.70	0.20
o-Xylene	15.78	0.06
Styrene	15.78	0.27
1,1,2,2-Tetrachloroethane	15.78	0.20
1,2,3-Trichloropropane	16.26	0.09
Isopropylbenzene	16.42	0.10
Bromobenzene	16.42	0.11
2-Chlorotoluene	16.74	0.08
n-Propylbenzene	16.82	0.10
4-Chlorotoluene	16.82	0.06

TABLE 2 Continued

CHROMATOGRAPHIC RETENTION TIMES AND METHOD DETECTION LIMITS (MDL) FOR VOLATILE ORGANIC COMPOUNDS ON NARROW-BORE CAPILLARY COLUMNS

Compound	Retention Time (minutes) Column 3[a]	MDL[b] (µg/L)
1,3,5-Trimethylbenzene	16.99	0.06
tert-Butylbenzene	17.31	0.33
1,2,4-Trimethylbenzene	17.31	0.09
sec-Butylbenzene	17.47	0.12
1,3-Dichlorobenzene	17.47	0.05
p-Isopropyltoluene	17.63	0.26
1,4-Dichlorobenzene	17.63	0.04
1,2-Dichlorobenzene	17.79	0.05
n-Butylbenzene	17.95	0.10
1,2-Dibromo-3-chloropropane	18.03	0.50
1,2,4-Trichlorobenzene	18.84	0.20
Naphthalene	19.07	0.10
Hexachlorobutadiene	19.24	0.10
1,2,3-Trichlorobenzene	19.24	0.14

[a] Column 3 - 30 meter × 0.32 mm ID DB-5 capillary with 1 µm film thickness.

[b] MDL based on a 25-mL sample volume.

TABLE 3

Compound	CAS No.[b]	Appropriate Preparation Technique[a] 5030/ 5035	5031	5032	5021	5041	Direct Inject.
Acetone	67-64-1	pp	c	c	nd	c	c
Acetonitrile	75-05-8	pp	c	nd	nd	nd	c
Acrolein (Propenal)	107-02-8	pp	c	c	nd	nd	c
Acrylonitrile	107-13-1	pp	c	c	nd	c	c
Allyl alcohol	107-18-6	ht	c	nd	nd	nd	c
Allyl chloride	107-05-1	c	nd	nd	nd	nd	c
Benzene	71-43-2	c	nd	c	c	c	c
Benzyl chloride	100-44-7	c	nd	nd	nd	nd	c
Bis(2-chloroethyl)sulfide	505-60-2	pp	nd	nd	nd	nd	c
Bromoacetone	598-31-2	pp	nd	nd	nd	nd	c
Bromochloromethane	74-97-5	c	nd	c	c	c	c
Bromodichloromethane	75-27-4	c	nd	c	c	c	c
4-Bromofluorobenzene (surr)	460-00-4	c	nd	c	c	c	c
Bromoform	75-25-2	c	nd	c	c	c	c
Bromomethane	74-83-9	c	nd	c	c	c	c
n-Butanol	71-36-3	ht	c	nd	nd	nd	c
2-Butanone (MEK)	78-93-3	pp	c	c	nd	nd	c
t-Butyl alcohol	75-65-0	pp	c	nd	nd	nd	c
Carbon disulfide	75-15-0	pp	nd	c	nd	c	c
Carbon tetrachloride	56-23-5	c	nd	c	c	c	c
Chloral hydrate	302-17-0	pp	nd	nd	nd	nd	c
Chlorobenzene	108-90-7	c	nd	c	c	c	c
Chlorobenzene-d_5 (IS)		c	nd	c	c	c	c
Chlorodibromomethane	124-48-1	c	nd	c	nd	c	c
Chloroethane	75-00-3	c	nd	c	c	c	c
2-Chloroethanol	107-07-3	pp	nd	nd	nd	nd	c
2-Chloroethyl vinyl ether	110-75-8	c	nd	c	nd	nd	c
Chloroform	67-66-3	c	nd	c	c	c	c
Chloromethane	74-87-3	c	nd	c	c	c	c
Chloroprene	126-99-8	c	nd	nd	nd	nd	c
3-Chloropropionitrile	542-76-7	l	nd	nd	nd	nd	pc
Crotonaldehyde	4170-30-3	pp	c	nd	nd	nd	c
1,2-Dibromo-3-chloropropane	96-12-8	pp	nd	nd	c	nd	c
1,2-Dibromoethane	106-93-4	c	nd	nd	c	nd	c
Dibromomethane	74-95-3	c	nd	c	c	c	c
1,2-Dichlorobenzene	95-50-1	c	nd	nd	c	nd	c
1,3-Dichlorobenzene	541-73-1	c	nd	nd	c	nd	c
1,4-Dichlorobenzene	106-46-7	c	nd	nd	c	nd	c
1,4-Dichlorobenzene-d_4 (IS)		c	nd	nd	c	nd	c
cis-1,4-Dichloro-2-butene	1476-11-5	c	nd	c	nd	nd	c

TABLE 3 Continued

Compound	CAS No.[b]	Appropriate Preparation Technique[a] 5030/ 5035	5031	5032	5021	5041	Direct Inject.
trans-1,4-Dichloro-2-butene	110-57-6	pp	nd	c	nd	nd	c
Dichlorodifluoromethane	75-71-8	c	nd	c	c	nd	c
1,1-Dichloroethane	75-34-3	c	nd	c	c	c	c
1,2-Dichloroethane	107-06-2	c	nd	c	c	c	c
1,2-Dichloroethane-d_4 (surr)		c	nd	c	c	c	c
1,1-Dichloroethene	75-35-4	c	nd	c	c	c	c
trans-1,2-Dichloroethene	156-60-5	c	nd	c	c	c	c
1,2-Dichloropropane	78-87-5	c	nd	c	c	c	c
1,3-Dichloro-2-propanol	96-23-1	pp	nd	nd	nd	nd	c
cis-1,3-Dichloropropene	10061-01-5	c	nd	c	nd	c	c
trans-1,3-Dichloropropene	10061-02-6	c	nd	c	nd	c	c
1,2,3,4-Diepoxybutane	1464-53-5	c	nd	nd	nd	nd	c
Diethyl ether	60-29-7	c	nd	nd	nd	nd	c
1,4-Difluorobenzene (IS)	540-36-3	nd	nd	nd	nd	c	nd
1,4-Dioxane	123-91-1	pp	c	c	nd	nd	c
Epichlorohydrin	106-89-8	l	nd	nd	nd	nd	c
Ethanol	64-17-5	l	c	c	nd	nd	c
Ethyl acetate	141-78-6	l	c	nd	nd	nd	c
Ethylbenzene	100-41-4	c	nd	c	c	c	c
Ethylene oxide	75-21-8	pp	c	nd	nd	nd	c
Ethyl methacrylate	97-63-2	c	nd	c	nd	nd	c
Fluorobenzene (IS)	462-06-6	c	nd	nd	nd	nd	nd
Hexachlorobutadiene	87-68-3	c	nd	nd	c	nd	c
Hexachloroethane	67-72-1	l	nd	nd	nd	nd	c
2-Hexanone	591-78-6	pp	nd	c	nd	nd	c
2-Hydroxypropionitrile	78-97-7	l	nd	nd	nd	nd	pc
Iodomethane	74-88-4	c	nd	c	nd	c	c
Isobutyl alcohol	78-83-1	pp	c	nd	nd	nd	c
Isopropylbenzene	98-82-8	c	nd	nd	c	nd	c
Malononitrile	109-77-3	pp	nd	nd	nd	nd	c
Methacrylonitrile	126-98-7	pp	l	nd	nd	nd	c
Methanol	67-56-1	l	c	nd	nd	nd	c
Methylene chloride	75-09-2	c	nd	c	c	c	c
Methyl methacrylate	80-62-6	c	nd	nd	nd	nd	c
4-Methyl-2-pentanone (MIBK)	108-10-1	pp	c	c	nd	nd	c
Naphthalene	91-20-3	c	nd	nd	c	nd	c
Nibrobenzene	98-95-3	c	nd	nd	nd	nd	c
2-Nitropropane	79-46-9	c	nd	nd	nd	nd	c
N-Nitroso-di-n-butylamine	924-16-3	pp	c	nd	nd	nd	c
Paraldehyde	123-63-7	pp	c	nd	nd	nd	c

TABLE 3 Continued

		Appropriate Preparation Technique[a]					
Compound	CAS No.[b]	5030/ 5035	5031	5032	5021	5041	Direct Inject.
Pentachloroethane	76-01-7	l	nd	nd	nd	nd	c
2-Pentanone	107-87-9	pp	c	nd	nd	nd	c
2-Picoline	109-06-8	pp	c	nd	nd	nd	c
1-Propanol	71-23-8	pp	c	nd	nd	nd	c
2-Propanol	67-63-0	pp	c	nd	nd	nd	c
Propargyl alcohol	107-19-7	pp	l	nd	nd	nd	c
ß-Propiolactone	57-57-8	pp	nd	nd	nd	nd	c
Propionitrile (ethyl cyanide)	107-12-0	ht	c	nd	nd	nd	pc
n-Propylamine	107-10-8	c	nd	nd	nd	nd	c
Pyridine	110-86-1	l	c	nd	nd	nd	c
Styrene	100-42-5	c	nd	c	c	c	c
1,1,1,2-Tetrachloroethane	630-20-6	c	nd	nd	c	c	c
1,1,2,2-Tetrachloroethane	79-34-5	c	nd	c	c	c	c
Tetrachloroethene	127-18-4	c	nd	c	c	c	c
Toluene	108-88-3	c	nd	c	c	c	c
Toluene-d_8 (surr)	2037-26-5	c	nd	c	c	c	c
o-Toluidine	95-53-4	pp	c	nd	nd	nd	c
1,2,4-Trichlorobenzene	120-82-1	c	nd	nd	c	nd	c
1,1,1-Trichloroethane	71-55-6	c	nd	c	c	c	c
1,1,2-Trichloroethane	79-00-5	c	nd	c	c	c	c
Trichloroethene	79-01-6	c	nd	c	c	c	c
Trichlorofluoromethane	75-69-4	c	nd	c	c	c	c
1,2,3-Trichloropropane	96-18-4	c	nd	c	c	c	c
Vinyl acetate	108-05-4	c	nd	c	nd	nd	c
Vinyl chloride	75-01-4	c	nd	c	c	c	c
o-Xylene	95-47-6	c	nd	c	c	c	c
m-Xylene	108-38-3	c	nd	c	c	c	c
p-Xylene	106-42-3	c	nd	c	c	c	c

[a] See Section 1.2 for other appropriate sample preparation techniques

[b] Chemical Abstract Service Registry Number

c = Adequate response by this technique
ht = Method analyte only when purged at 80°C
nd = Not determined
l = Inappropriate technique for this analyte
pc = Poor chromatographic behavior
pp = Poor purging efficiency resulting in high Estamated Quantitation Limits
surr = Surrogate
IS = Internal Standard

TABLE 4

BFB (4-BROMOFLUOROBENZENE) MASS INTENSITY CRITERIA[a]

m/z	Required Intensity (relative abundance)
50	50 to 40% of m/z 95
75	30 to 60% of m/z 95
95	Base peak, 100% relative abundance
96	5 to 9% of m/z 95
173	Less than 2% of m/z 174
174	Greater than 50% of m/z 95
175	5 to 9% of m/z 174
176	Greater than 95% but less than 101% of m/z 174
177	5 to 9% of m/z 176

a Alternate tuning criteria may be used, (e.g. CLP, Method 524.2, or manufacturers instructions), provided that method performance is not adversely affected.

TABLE 5

CHARACTERISTIC MASSES (m/z) FOR PURGEABLE ORGANIC COMPOUNDS

Compound	Primary Characteristic Ion	Secondary Characteristic Ion(s)
Acetone	58	43
Acetonitrile	41	40, 39
Acrolein (Propenal)	56	55, 58
Acrylonitrile	53	52, 51
Allyl alcohol	57	58, 39
Allyl chloride	76	41, 39, 78
Benzene	78	--
Benzyl chloride	91	126, 65, 128
Bromoacetone	136	43, 138, 93, 95
Bromobenzene	156	77, 158
Bromochloromethane	128	49, 130
Bromodichloromethane	83	85, 127
Bromoform	173	175, 254
Bromomethane	94	96
iso-Butanol	74	43
n-Butanol	56	41
2-Butanone	72	43
n-Butylbenzene	91	92, 134
sec-Butylbenzene	105	134
tert-Butylbenzene	119	91, 134
Carbon disulfide	76	78
Carbon tetrachloride	117	119
Chloral hydrate	82	44, 84, 86, 111
Chloroacetonitrile	48	75
Chlorobenzene	112	77, 114
1-Chlorobutane	56	49
Chlorodibromomethane	129	208, 206
Chloroethane	64 (49*)	66 (51*)
2-Chloroethanol	49	44, 43, 51, 80
Bis(2-chloroethyl) sulfide	109	111, 158, 160
2-Chloroethyl vinyl ether	63	65, 106
Chloroform	83	85
Chloromethane	50 (49*)	52 (51*)
Chloroprene	53	88, 90, 51
3-Chloropropionitrile	54	49, 89,91
2-Chlorotoluene	91	126
4-Chlorotoluene	91	126
1,2-Dibromo-3-chloropropane	75	155, 157
Dibromochloromethane	129	127

TABLE 5 Continuted

CHARACTERISTIC MASSES (m/z) FOR PURGEABLE ORGANIC COMPOUNDS

Compound	Primary Characteristic Ion	Secondary Characteristic Ion(s)
1,2-Dibromoethane	107	109, 188
Dibromomethane	93	95, 174
1,2-Dichlorobenzene	146	111, 148
1,2-Dichlorobenzene-d_4	152	115, 150
1,3-Dichlorobenzene	146	111, 148
1,4-Dichlorobenzene	146	111, 148
cis-1,4-Dichloro-2-butene	75	53, 77, 124, 89
trans-1,4-Dichloro-2-butene	53	88, 75
Dichlorodifluoromethane	85	87
1,1-Dichloroethane	63	65, 83
1,2-Dichloroethane	62	98
1,1-Dichloroethene	96	61, 63
cis-1,2-Dichloroethene	96	61, 98
trans-1,2-Dichloroethene	96	61, 98
1,2-Dichloropropane	63	112
1,3-Dichloropropane	76	78
2,2-Dichloropropane	77	97
1,3-Dichloro-2-propanol	79	43, 81, 49
1,1-Dichloropropene	75	110, 77
cis-1,3-Dichloropropene	75	77, 39
trans-1,3-Dichloropropene	75	77, 39
1,2,3,4-Diepoxybutane	55	57, 56
Diethyl ether	74	45, 59
1,4-Dioxane	88	58, 43, 57
Epichlorohydrin	57	49, 62, 51
Ethanol	31	45, 27, 46
Ethyl acetate	88	43, 45, 61
Ethylbenzene	91	106
Ethylene oxide	44	43, 42
Ethyl methacrylate	69	41, 99, 86, 114
Hexachlorobutadiene	225	223, 227
Hexachloroethane	201	166, 199, 203
2-Hexanone	43	58, 57, 100
2-Hydroxypropionitrile	44	43, 42, 53
Iodomethane	142	127, 141
Isobutyl alcohol	43	41, 42, 74
Isopropylbenzene	105	120
p-Isopropyltoluene	119	134, 91
Malononitrile	66	39, 65, 38

TABLE 5 Continuted

CHARACTERISTIC MASSES (m/z) FOR PURGEABLE ORGANIC COMPOUNDS

Compound	Primary Characteristic Ion	Secondary Characteristic Ion(s)
Methacrylonitrile	41	67, 39, 52, 66
Methyl acrylate	55	85
Methyl-t-butyl ether	73	57
Methylene chloride	84	86, 49
Methyl ethyl ketone	72	43
Methyl iodide	142	127, 141
Methyl methacrylate	69	41, 100, 39
4-Methyl-2-pentanone (MIBK)	100	43, 58, 85
Naphthalene	128	--
Nibrobenzene	123	51, 77
2-Nitropropane	46	--
2-Picoline	93	6, 92, 78
Pentachloroethane	167	130, 132, 165, 169
Propargyl alcohol	55	39, 38, 53
ß-Propiolactone	42	43, 44
Propionitrile (ethyl cyanide)	54	52, 55, 40
n-Propylamine	59	41, 39
n-Propylbenzene	91	120
Pyridine	79	52
Styrene	104	78
1,2,3-Trichlorobenzene	180	182, 145
1,2,4-Trichlorobenzene	180	182, 145
1,1,1,2-Tetrachloroethane	131	133, 119
1,1,2,2-Tetrachloroethane	83	131, 85
Tetrachloroethene	164	129, 131, 166
Toluene	92	91
1,1,1-Trichloroethane	97	99, 61
1,1,2-Trichloroethane	83	97, 85
Trichloroethene	95	97, 130, 132
Trichlorofluoromethane	151	101, 153
1,2,3-Trichloropropane	75	77
1,2,4-Trimethylbenzene	105	120
1,3,5-Trimethylbenzene	105	120
Vinyl acetate	43	86
Vinyl chloride	62	64
o-Xylene	106	91
m-Xylene	106	91
p-Xylene	106	91

TABLE 5 Continuted

CHARACTERISTIC MASSES (m/z) FOR PURGEABLE ORGANIC COMPOUNDS

Compound	Primary Characteristic Ion	Secondary Characteristic Ion(s)
Internal Standards/Surrogates:		
Benzene-d_6	84	83
Bromobenzene-d_5	82	162
Bromochloromethane-d_2	51	131
1,4-Difluorobenzene	114	
Chlorobenzene-d_5	117	
1,4-Dichlorobenzene-d_4	152	115, 150
1,1,2-Trichlorethane-d_3	100	
4-Bromofluorobenzene	95	174, 176
Chloroform-d_1	84	
Dibromofluoromethane	113	
Internal Standards/Surrogates		
Dichloroethane-d_4	102	
Toluene-d_8	98	
Pentafluorobenzene	168	
Fluorobenzene	96	77

* Characterstic ion for an ion trap mass spectrometer (to be used when ion-molecule reaction are observed).

TABLE 6

DAT's STATISTICALLY DERIVED LABORATORY SPIKE QC LIMITS
FOR 8260B ANALYTES

Analyte	Limit Low -3 Sigma	Limit High +3 Simga	%RSD
Dichlorodifluoromethane	38	109	16.0
Chloromethane	52	122	13.5
Vinyl chloride	16	159	27.1
Bromomethane	62	108	8.8
Chloroethane	66	129	10.7
Trichlorofluoromethane	96	98	0.34
1,1-Dichloroethene	76	106	5.50
Methylene Chloride	94	132	5.53
trans-1,2-Dichloroethene	54	123	13.1
1,1-Dichloroethane	90	108	3.1
cis-1,2-Dichloroethene	67	121	9.6
Chloroform	88	111	3.8
1,1,1-Trichloroethane	84	111	4.7
Carbon tetrachloride	85	105	3.4
1,1-Dichloropropene	70	113	7.9
Benzene	75	109	6.1
1,2-Dichloroethane	75	120	7.6
Trichloroethene	70	118	8.5
1,2-Dichloropropane	82	118	5.9
Diromomethane	74	125	8.6
Bromodichloromethane	82	120	6.3
Toluene	95	110	2.4
1,1,2-Trichloroethane	86	117	5.0
Tetrachloroethylene	77	117	6.9
1,-Dichloropropane	91	122	4.9
Dibromochloromethane	91	118	4.2
1,2-Dibromoethane	83	130	7.3
Chlorobenzene	69	115	8.2
Ethylbenzene	71	129	9.6
1,1,1,2-Tetrachloroethane	68	120	9.2
m/p-Xylene	78	110	5.7
p-Xylene	77	124	7.7
Styrene	75	128	8.7
Bromoform	53	137	14.8
Isopropylbenzene	75	119	7.5

TABLE 6 Continuted

DAT's STATISTICALLY DERIVED LABORATORY SPIKE QC LIMITS
FOR 8260B ANALYTES

Analyte	Limit Low -3 Sigma	Limit High +3 Simga	%RSD
Bromobenzene	74	115	7.3
11,1,2,2-Tetrachloroethane	49	159	17.7
n-Propylbenzene	81	112	5.4
1,2,3-Trichloropropane	68	130	10.4
2-Chlorotoluene	79	126	7.8
1,3,5-Trimethylbenzene	86	122	5.7
4-Chlorotoluene	71	118	8.20
sec-Butylbenzene	75	134	9.4
1,2,4-Trimethylbenzene	79	125	7.5
tert-Butylbenzene	78	136	9.1
1,3-Dichlorobenzene	67	136	11.3
p-Isopropyltoluene	78	136	9.1
n-Butylbenzene	52	156	16.7
1,4-Dichlorobenzene	84	111	4.7
1,2-Dichlorobenzene	84	115	5.1
1,2-Dibromo-3-chloropropane	60	171	16.0
1,2,4-Trichlorobenzene	74	118	7.6
Hexachlorobutadiene	56	135	13.9
Naphthalene	-29	159	48.5
1,2,3-Trichlorobenzene	62	130	11.8

TABLE 7

DAT's STATISTICALLY DERIVED QC LIMITES FOR SURROGATE RECOVERIES FOR VOST ANALYSIS

Surrogate	QC Limits
Dibromofluoromethane	58-127
Benzene-d6	28-174
Toluene-d8	64-135
Ethylbenzene-d10	50-130
BFB	45-143

D A T Laboratory , Inc.
Controlled Copy
Copy 5 **of** 6
Approved by Tasrah Carnahan
Date 09/20/2006

SOP - 92

STANDARD OPERATING PROCEDURE (SOP)
FOR THE DETERMINATION OF PCDDs AND PCDFs
BY HRGC/HRMS METHOD 8290

Reviewed by: _____ Date: 8/23/06
Quality Assurance Officer

Approved by: _____ Date: 8/23/06
President, DAT Inc.

DATA ANALYSIS TECHNOLOGIES, INC (DAT)
7715 CORPORATE BLVD.
PLAIN CITY, OH 43064

Date:	Reviewed by:	Date	Reviewed by:

PROCEDURE

1.0 SCOPE:

1.1. This method provides procedures for the analysis of polychlorinated dibenzo-p-dioxins (tetra- through octachlorinated homologues; PCDDs), and polychlorinated dibenzofurans (tetra- through octachlorinated homologues; PCDFs) from extracts of samples prepared according to SW 846 Method 8290. Air samples should be prepared as described in Method 23, DAT SOP 115.

1.2. Prior to analysis the laboratory must demonstrate proficiency using the preparative method DAT SOP 155 and the analysis using DAT SOP 92.

1.3. Sample specific Estimated Detection Limits (EDLs) are calculated for each 2,3,7,8 and each non 2,3,7,8- substituted congener according to Method 8290.

2.0 APPLICATION:

2.1. This method uses high resolution gas chromatography and high resolution mass spectrometry (HRGC/HRMS) on purified sample extracts. Samples with concentrations of specific congeneric analytes that are greater than ten times the upper MCLs (method calibration limits) must be analyzed by Method 8280 or other method.

3.0 DETECTION LIMITS:

3.1. Detection limits differ depending on the individual matrix and its complexity. However a 1L water sample will have a lower DL of 0.01 ppt for 2,3,7,8-TCDD. See Table 9 for a list of method calibration limits.

4.0 SUMMARY OF METHOD:

4.1. This procedure uses matrix specific extraction, analyte specific cleanup and HRGC/HRMS analysis techniques.

4.2. A specified amount (See Table 9) of a sample of a specific matrix is spiked with a solution containing specified amounts of nine isotopically ($^{13}C_{12}$) labeled PCDDs/PCDFs. The sample is then extracted according to a matrix specific extraction procedure.

4.3. The extracts are submitted to an acid-base washing treatment and dried. Following a solvent exchange step, the extracts are cleaned up by column chromatography on alumina, silica gel, and activated carbon.

4.4. The preparation of the final extract for HRGC/HRMS analysis is accomplished by adding 10 to 50 µl of a nonane solution containing 50 pg/µl of the recovery standards.

4.5. Two µl of the concentrated extract are injected into an HRGC/HRMS system capable of performing selected ion monitoring at resolving powers of at least 10,000 (10 percent valley definition).

4.6. The identification of OCDD and nine of the fifteen substituted congeners for which a 13C-labeled standard is available in the sample fortification and recovery standard solutions is based on their elution at their exact retention time and the simultaneous detection of the two most abundant ions in the molecular ion region. Identification is also based on a comparison of the ratios of the integrated ion abundance of the molecular ion species to their theoretical abundance ratios.

4.7. Quantitation of the individual congeners, total PCDDs and total PCDFs is achieved in conjunction with the establishment of a five point calibration curve for each homologue, during which each calibration solution is analyzed once.

5.0 SAMPLE COLLECTION, PRESERVATION, SHIPMENT AND STORAGE:

5.1. Shipping and storage temperatures and holding times must be documented for review.

5.2. Grab and composite samples should be collected in glass containers. Whole fish should be ground or blended to provide a homogeneous sample.

5.3. Holding times are matrix specific and are as noted:

5.4. Aqueous, soil and air samples must be shipped and stored at less than 6°C. Fish and tissue samples must be shipped at less than 4°C and stored in deep freeze at less than -10°C.

5.5. Sodium thiosulfate must be added to aqueous samples before extraction if it is determined that residual chlorine is present. This can be done in the field or in the laboratory.

6.0 INTERFERENCES:

6.1. Solvents, reagents, glassware and other sample processing hardware may yield discrete artifacts or elevated baselines that may cause misinterpretation of the chromatographic data. A method blank must be analyzed to prove that this hardware is free from contamination. Analysts should avoid using PVC gloves.

6.2. Interferants coextracted from the sample may be found at concentrations several orders of magnitude higher than the analytes of interest. The clean-up technique described in this SOP must be used to reduce interference.

7.0 SAFETY:

7.1. All personnel are required to comply with DAT's Health and Safety Documents as described in the Quality Assurance Manual.

7.2. Because of the extreme toxicity of many of these compounds, the analyst must take the necessary precautions to prevent exposure to materials known or believed to contain PCDDs or PCDFs.

8.0 EQUIPMENT AND SUPPLIES:

8.1. Reference EPA Method 8290 for a complete list of all equipment and supplies necessary for the extraction and clean-up of samples for the analysis of PCDDs and PCDFs.

8.2. **HRGC/HRMS/DS:** (High-Resolution Gas Chromatograph/High-Resolution Mass Spectrometer/Data System). *The GC is equipped for temperature programming and capillary* columns.

8.2.1. GC Injection Port - The GC injection port is designed for capillary columns. 2 µL injection volumes are used unless otherwise noted.

8.2.2. Gas Chromatograph/Mass Spectrometer (GC/MS) Interface - The GC/MS interface components can withstand 350°C. The interface has been designed so that the separation of 2,3,7,8-TCDD from the other TCDD isomers achieved in the gas chromatographic column is not appreciably degraded. The GC column is fitted directly into the mass spectrometer ion source without being exposed to the ionizing electron beam. Graphite ferrules should be avoided in the injection port because they may adsorb the PCDDs and PCDFs. Vespel®, or equivalent, ferrules are recommended.

8.2.3. Mass Spectrometer - The static resolving power of the instrument must be maintained at a minimum of 10,000 (10 percent valley).

8.2.3.1. The mass spectrometer must be operated in a selected ion monitoring (SIM) mode with a total cycle time (including the voltage reset time) of one second or less. At a minimum, the ions listed in Table 6 for each of the five SIM descriptors must be monitored. Note that with the exception of the last descriptor (OCDD/OCDF), all descriptors contain 10 ions. The selection (Table 6) of the molecular ions M and M+2 for 13C-HxCDF and 13C-HpCDF rather than M+2 and M+4 (for consistency) was made to eliminate, even under high-resolution mass spectrometric conditions, interferences occurring in these two ion channels for samples containing high levels of native HxCDDs and HpCDDs. It is important to maintain the same set of ions for both calibration and sample extract analyses. The selection of the lock-mass ion is left to the performing laboratory.

NOTE: **At the option of the analyst, the tetra- and pentachlorinated dioxins and furans can be combined into a single descriptor.**

8.2.3.2. The recommended mass spectrometer running conditions are based on the groups of monitored ions shown in Table 6. By using a PFK molecular leak, tune the instrument to meet the minimum required resolving power of 10,000 (10 percent valley) at m/z 304.9824 (PFK) or any other reference signal close to m/z 303.9016

(from TCDF). By using peak matching conditions and the aforementioned PFK reference peak, verify that the exact mass of m/z 380.9760 (PFK) is within 5 ppm of the required value. Note that the selection of the low- and high-mass ions must be such that they provide the largest voltage jump performed in any of the five mass descriptions (Table 6).

8.2.4. Data System - A dedicated data system is employed to control the rapid multiple-ion monitoring process and to acquire the data. Quantitation data (peak areas or peak heights) and SIM traces (displays of intensities of each ion signal being monitored including the lock-mass ion as a function of time) must be acquired during the analyses and stored. Quantitation may be reported based upon computer generated peak areas or upon measured peak heights (chart recording). The data system is set to acquire data as low as 10 ions in a single scan. The data system is set to switch to different sets of ions (descriptors) at specified times during an HRGC/HRMS acquisition. The data system provides hard copies of individual ion chromatograms for selected gas chromatographic time intervals. It also acquires mass spectral peak profiles and provides hard copies of peak profiles to demonstrate the required resolving power. Measurements of noise on the base line are performed using the hard copies of individual ion chromatograms provided by the data system.

NOTE: *The detector ADC zero setting must be set to allow peak-to-peak measurement of the noise on the base line of every monitored channel and allow for good estimation of the instrument resolving power.*

8.2.5. GC Columns

a. In order to have an isomer specific determination for 2,3,7,8-TCDD and to allow the detection of OCDD/OCDF within a reasonable time interval in one HRGC/HRMS analysis, the 60 m DB-5 fused silica capillary column is used. Minimum acceptance criteria must be demonstrated and documented. At the beginning of each 12 hour period (after mass resolution and GC resolution is demonstrated) during which sample extracts or continuing calibration solutions will be analyzed, column operating conditions must be attained for the required separation on the column to be used for samples. Operating conditions known to produce acceptable results with the recommended column are shown in Table 2.

b. 2,3,7,8-TCDF isomer must be confirmed on a DB-Dioxin 60m x 0.25mm x 0.15mm bonded phase fused silica capillary column (which resolves the 2378-TCDF isomer), when 2,3,7,8-TCDF is detected on the DB-5 column at a level greater than or equal to the target detection limit. An equivalent column may be substituted.

9.0 REAGENTS AND STANDARDS:

9.1. Reagents and standards used for sample extraction and cleanup are addressed in DAT SOP 155.

9.2. Calibration Solutions (Table 1) - Five nonane solutions containing 17 unlabeled PCDDs and PCDFs and 18 $^{13}C_{12}$ -labeled PCDDs and PCDFs at known concentrations are used to calibrate the instrument. The concentration ranges are homologue dependent, with the lowest values for the tetrachlorinated dioxin and furan (0.5 pg/µL) and the highest values for the octachlorinated congeners (1000 pg/µL).

9.3. Recovery Standard Solution - This nonane solution contains two recovery standards, $^{13}C_{12}$-1,2,3,4-TCDD and $^{13}C_{12}$-1,2,3,7,8,9-HxCDD, at a nominal concentration of 100 pg/µL per compound. 20 µL of this solution is spiked into each sample extract before the HRGC/HRMS analysis.

9.4. GC Column Performance/Retention Window Check Solution (RTCHK) - This solution contains the first and last eluting isomers for each homologous series from tetra- through heptachlorinated congeners. The solution also contains a series of other TCDD isomers for the purpose of documenting the chromatographic resolution.

9.5. All the components and concentrations of each calibration standard, recovery standard, internal standard, and matrix spike solution is verified prior to use for sample analyses. Testing consists of back to back analysis of the "test" solution and a "control" solution. Each component of the test solution must be within 80-120% of the true concentration when calculated versus the control standard.

9.6. Standards are stored in 1/2 dram amber glass vials at room temperature.

10.0 QUALITY CONTROL, ACCEPTANCE CRITERIA AND CORRECTIVE ACTIONS:

10.1. System Performance Criteria:

At the beginning of each 12-hour period during which samples are to be analyzed, an aliquot of the 1) GC column performance check solution and 2) high resolution concentration calibration solution No.3 (See Table 1) shall be analyzed. A mass resolution check is also performed using an appropriate reference compound such as PFK. A continuing calibration and mass resolution check must be performed at the end of a 12 hour period or at the end of the analysis batch, however, the performance check solution must be analyzed only once, at the beginning of the 12 hour period.

10.1.1. GC Column Performance

Inject 2 µl of the column performance check solution and acquire selected ion monitoring data. The chromatographic separation between 2,3,7,8-TCDD and the peaks representing any other unlabeled TCDD isomers must be resolved with a valley of ≤ 25%, where:

Valley percent = (x/y) * (100)

x = measured as in Figure 4 from the 2,3,7,8-closest TCDD eluting isomer

y = the peak height of 2,3,7,8-TCDD.

10.1.2. Mass spectrometer Performance

The mass spectrometer must be operated in the electron ionization mode. A static resolving power of at least 10000 must be demonstrated at appropriate masses before any analysis is performed. Static resolving power checks must be performed at the beginning and at the end of each 12-hour period of operation. Corrective action must be implemented whenever the resolving power does not meet the requirement.

A mass drift correction must be performed. Select a lock-mass ion from the reference compound (PFK). The selection of the lock-mass ion is dependent on the masses of the ions monitored within each descriptor. The level of the PFK metered into the ion chamber during analysis should be adjusted so that the amplitude of the most intense selected lock-mass ion signal does not exceed 10 percent of the full scale deflection for a given set of detector parameters.

The instrument resolving power must be documented.

Results of at least one analysis of the GC column performance check solution and of two mass resolution and continuing calibration checks must be reported with the sample data collected during a 12-hour period. Deviations from criteria specified for the GC performance check or for the mass resolution check invalidate all positive sample data collected between analyses of the performance check solution and the extracts from those positive samples shall be reanalyzed.

10.2. Quality Control Samples

10.2.1. Method Blank:

An HRGC/HRMS method blank run is required between a calibration run and the first sample run. The sample method blank extract may by analyzed more than once if the number of samples within a batch requires more than 12 hours of analyses.

- Unlabelled analyte concentrations in the method blank must be 1) ≤1 ppt for TCDD and TCDF, 2) ≤ 5 ppt for penta-heptaCDD and CDF and 3) ≤ 10 ppt for OCDD and OCDF.
- Internal standard recoveries in the blank must be within 1) 40-135% for tetra-octa, and have a S/N ≥ 10:1.
- Detection limits obtained for each blank cannot exceed 1) ≤1 ppt for TCDD and TCDF, 2) ≤ 5 ppt for penta-heptaCDD and CDF and 3) ≤ 10 ppt for OCDD and OCDF.

If method blank criteria cannot be met, the sample set must be reextracted and reanalyzed.

10.2.2. Matrix Spike and Matrix Spike Duplicate

A matrix spike must be analyzed with the sample set. The results obtained from the MS and MSD samples should agree within 20% RPD. Results reported outside the criteria must be flagged and explained.

10.2.3. Internal Standard Recoveries

For each sample and QC sample, calculate the percent recovery of the internal standard. Internal standard recoveries must be within 1) 40-135% for tetra-octa and have a S/N ≥ 10:1. If internal standard recovery criteria cannot be met, the sample must be reanalyzed.

10.2.4. In each batch of samples, locate the sample specified for duplicate analysis, and analyze a second 10g soil or sediment sample, or an appropriate amount of the type of matrix under consideration.

10.2.4.1. The results of the laboratory duplicates (percent recovery and concentrations of 2, 3, 7, 8-substituted PCDD/ PCDF compounds) should agree within 25 percent relative difference (difference expressed as percentage of the mean). Report all results.

11.0 CALIBRATION AND STANDARDIZATION:

11.1. Initial Calibration (ICAL) - Initial calibration of the instrument is required before any samples are analyzed for PCDDs and PCDFs. Initial calibration is also required if any continuing calibration does not meet the required criteria.

11.1.1. All five calibration solutions listed in Table 1 must be used for the initial calibration.

11.1.2. Tune the instrument with Perfluorokerosene (PFK) to achieve a static resolving power of at least 10,000 (10% valley).

11.1.2.1. Documentation of the mass spectrometer resolving power is accomplished by recording the peak profile of the high-mass reference signal (typically m/z 330.9792) obtained during a peak examination experiment by using the low-mass PFK ion at m/z 292.9825 (or lower in mass) as a reference.

11.1.2.2. The format of the peak profile representation allows manual determination of the peak resolution. The peak width (at 5% peak height) of the high-mass reference ion must not exceed 100 ppm (resolving power: 10,000) for samples analyzed under the 8290 protocol. Peak width is determined by triangulation with no more than 10% allowance for sampling error. Instrumental ion transmission and resolution will be checked, adjusted and documented in case the resolution is below the minimum required 10,000 resolving power.

11.1.3. Inject 2 µL of the GC column performance check solution and acquire SIM mass spectral data as described earlier in Section 8.2.3.1. The total cycle time must not exceed 1 second.

11.1.4. Using the same GC and MS conditions that produced acceptable results for the column performance check solution (i.e. acquisition windows and TCDD resolution), analyze a 2 µL portion of each of the five calibration solutions with the following spectrometer

operating parameters.

11.1.4.1. The ratio of integrated ion current for the ions appearing in Table 5 (homologous series quantitation ions) must be within the indicated control limits (set for each homologous series).

11.1.4.2. The ratio of integrated ion current for the ions belonging to the carbon-labeled internal, surrogate, alternate, and recovery standards must be within the control limits stipulated in Table 5.

NOTE: *Ion ratios for all 17 native analytes and all 18 carbon-labeled internal and recovery standards must be within the specified control limits simultaneously in one run for each of the five (5) calibration standard solutions. If the ion abundance ratios are outside the limits, corrective action must be taken and acceptable abundance ratios achieved before any samples may be analyzed.*

11.1.4.3. For each SICP and for each GC signal representing the elution of a target analyte the signal-to-noise ratio (S/N) must be better than or equal to 2.5.

11.1.4.4. Referring to Tables 6, 7, and 8, calculate the 17 relative response factors (RRF) for unlabeled target analytes relative to their appropriate internal standards, the nine RRFs for the labeled $^{13}C_{12}$ internal standards and the seven labeled surrogate and alternate standards relative to the two recovery standards according to the following formulae:

$$\text{RRF (n)} = \frac{A_x \times Q_{is}}{Q_x \times A_{is}}$$

$$\text{RRF (m)} = \frac{A_{is} \times Q_{rs}}{Q_{is} \times A_{rs}}$$

Where:

RRF (n)	=	Analyte RRF
RRF (m)	=	Standard RRF
A_x	=	sum of the integrated ion abundances of the quantitation ions (Table 3) for unlabeled PCDDs/PCDFs,
A_{is}	=	sum of the integrated ion abundances of the quantitation ions (Table 3) for the labeled internal standards,
A_{rs}	=	sum of the integrated ion abundances of the quantitation ions (Table 3) for the labeled recovery standards,
Q_{is}	=	quantity of the internal standard injected (pg),
Q_{rs}	=	quantity of the recovery standard injected (pg), and
Q_x	=	quantity of the unlabeled PCDD/PCDF analyte injected (pg).

The RRF (n) and RRF (m) are dimensionless quantities; the units used to express Q_{is}, Q_{rs} and Q_x must be the same.

11.1.4.5. Calculate the average RRF and their respective percent relative standard deviations (%RSD) for the five calibration solutions.

11.1.4.6. The relative response factors to be used for the determination of the concentration of total isomers in a homologous series are calculated as follows:

- For congeners that belong to a homologous series containing only one isomer (e.g., OCDD and OCDF) or only one 2,3,7,8-substituted isomer TCDD, PeCDD, HpCDD, and TCDF), the mean RRF used will be the same as the mean RRF determined in Section 11.1.4.7.

NOTE: *The calibration solutions do not contain $^{13}C_{12}$-OCDF as an internal standard. This is because a minimum resolving power of 12,000 is required to resolve the $[M+6]^+$ ion of $^{13}C_{12}$-OCDF from the $[M+2]^+$ ion of OCDD (and $[M+4]^+$ from $^{13}C_{12}$-OCDF with $[M]^+$ of OCDD). Therefore, the RRF for OCDF is calculated relative to $^{13}C_{12}$-OCDD.*

- For congeners that belong to a homologous series containing more than one 2,3,7,8-substituted isomer the mean RRF used for those homologous series will be the average of the mean RRFs calculated for all individual 2,3,7,8-substituted congeners.

NOTE: *HRGC/HRMS responses of all isomers in a homologous series that do not have the 2,3,7,8-substitution pattern are assumed to be the same as the responses of one or more of the 2,3,7,8-substituted isomer(s) in that homologous series.*

11.1.4.7. Relative response factors [RRF (m)] to be used for the determination of the percent recoveries for the internal surrogate and alternate standards are calculated as follows:

$$\text{RRF (m)} = \frac{A_{is} \times Q_{rs}}{Q_{is} \times A_{rs}}$$

$$\text{RRF (m)} = \frac{1}{5} \sum_{j=1}^{5} \text{RRF}$$

Where:

A_{is}	=	sum of the integrated ion abundances of the quantitation ions for a given standard,
A_{rs}	=	sum of the integrated ion abundances of the quantitation ions for the appropriate recovery standard,
Q_{rs}, Q_{is}	=	quantities of, respectively, the recovery standard (rs) and a particular standard injected (pg),
RRF	=	relative response factor of a particular standard relative to an appropriate recovery standard, as determined from one injection, and

RRF = calculated mean relative response factor of a particular labeled standard relative to an appropriate recovery standard, as determined from the five initial calibration injections.

11.2. Acceptance Criteria for Initial Calibration - The criteria listed below for acceptable calibration must be met before the analysis is performed.

11.2.1. The percent relative standard deviations for the mean response factors [RRF (m)] from the 17 unlabeled standards must not exceed ± 20 percent, and those for the labeled reference compounds must not exceed ± 30 percent.

11.2.2. The S/N ratio for the GC signals present in every SICP (including the ones for the labeled standards) must be ≤ 10.

11.2.3. The isotopic ratios (Table 5) must be within the specified control limits.

NOTE: *If the criterion for acceptable calibration listed in Section 11.2 is met, the analyte specific RRF can then be considered independent of the analyte quantity for the calibration concentration range. The mean RRFs will be used for all calculations until the continuing calibration criteria (Section 11.4) are no longer met. At such time, new mean RRFs will be calculated from a new set of injections of the calibration solutions.*

11.3. Continuing Calibration Check (CONCAL) - Continuing calibrations must be performed at the beginning of a 12-hour period after successful mass resolution and RTCHK. A continuing calibration is also required at the end of a 12-hour shift.

11.3.1. Inject 2 µL of the CONCAL solution HRCC-4 standard (Table 1). By using the same HRGC/HRMS conditions as used in Table 2, determine and document an acceptable calibration as provided in Section 11.4.

11.4. Acceptance Criteria for Continuing Calibration - The following criteria must be met before further analysis is performed.

11.4.1. The measured RRFs [for the unlabeled standards] obtained during the continuing calibration runs must be within ± 20 percent of the mean values established during the initial calibration (Section 11.1).

11.4.2. The measured RRFs [for the labeled standards] obtained during the routine calibration runs must be within ± 30 percent of the mean values established during the initial calibration (Section 11.1).

11.4.3. The ion-abundance ratios (Table 5) must be within the allowed control limits.

11.4.4. If either one of the criteria in Sections 11.4.1 and 11.4.2 is not satisfied, repeat one more time. If these criteria are still not satisfied, the entire continuing calibration process (Section 11.3) must be reviewed.

11.4.5. If an acceptable CONCAL cannot be achieved, the GC/MS system must be evaluated. If the instrument is determined fit to run, an acceptable initial calibration must be obtained (section 11.1 above) before any sample may be analyzed.

12.0 PROCEDURE:

12.1. Remove the sample extract (blown to dryness) or blank from storage. Add 20 µL of recovery standard and mix thoroughly

NOTE: *A final volume of 20 µL or more should be used whenever possible. A 10 µL final volume is difficult to handle, and injection of 2 µL out of 10 µL leaves little sample for confirmations and repeat injections, and for archiving.*

12.2. Inject a 2 µL aliquot of the extract into the GC, operated under the GC conditions that have produced acceptable CONCAL and RTCHK results.

12.3. Acquire SIM data using the same acquisition and mass spectrometer operating conditions previously used to determine the relative response factors. Ions characteristic for polychlorinated diphenyl ethers are included in the descriptors listed in Table 3.

NOTE: *The acquisition period must at least encompass the PCDD/PCDF overall retention time window previously determined. Selected ion current profiles (SICP) for the lock-mass ions (one per mass descriptor) must also be recorded and included in the data package. These SICPs must be true representations of the evolution of the lock-mass ions amplitudes during the HRGC/HRMS run. The analyst may be required to monitor a PFK ion, not as a lock mass, but as a QC ion, in order to meet this requirement. It is recommended to examine the QC ion or lock-mass ion SICP for obvious basic sensitivity and stability changes of the instrument during the GC/MS run that could affect the measurements [Tondeur et al., 1984, 1987]. Report any discrepancies in the case narrative.*

12.4. Identification Criteria - For a gas chromatographic peak to be identified as a PCDD or PCDF, it must meet all of the following criteria:

12.4.1. Retention Times

12.4.1.1. For 2,3,7,8-substituted congeners, which have an isotopically labeled internal or recovery standard present in the sample extract (this represents a total of 10 congeners including OCDD; Table 1), the retention time (RRT; at maximum peak height) of the sample components (i.e., the two ions used for quantitation purposes listed in Table 3), must be within -1 to +3 seconds of the isotopically labeled standard.

12.4.1.2. For 2,3,7,8-substituted compounds that do not have an isotopically labeled internal standard present in the sample extract (this represents a total of eight congeners;

Table 3), the retention time must fall within 0.005 retention time units of the relative retention times measured in the continuing calibration. Identification of OCDF is based on its retention time relative to $^{13}C_{12}$-OCDD as determined from the 12 hour continuing calibration results.

12.4.1.3. For non-2,3,7,8-substituted compounds (tetra through octa; totaling 119 congeners), the retention time must be within the corresponding homologous retention time windows established by analyzing the RTCHK solution.

12.4.1.4. The ion current responses for both ions used in quantitation (e.g., for TCDDs: m/z 319.8965 and 321.8936) must reach maximum simultaneously (± 2 seconds).

12.4.1.5. The ion current responses for both ions used for the labeled standards (e.g., for $^{13}C_{12}$-TCDD: m/z 331.9368 and m/z 333.9339) must reach maximum simultaneously (± 2 seconds).

NOTE: *The analyst is required to ensure that the acquisition windows are set to acquire all 119 congeners properly.*

12.4.2. Ion Abundance Ratios

12.4.2.1. The integrated ion current for the two ions used for quantitation purposes must have a ratio between the lower and upper limits established for the homologous series to which the peak is assigned (Table 5).

12.4.3. Signal-to-Noise Ratio

12.4.3.1. All ion current intensities must be ≥ 2.5 times noise level for positive identification of a PCDD/PCDF compound or a group of coeluting isomers.

12.4.4. Polychlorinated Diphenyl Ether Interferences

12.4.4.1. In addition to the above criteria, the identification of a GC peak as a PCDF can only be made if no signal having a S/N ≥ 2.5 is detected, at the same retention time (± 2 seconds), in the corresponding polychlorinated diphenyl ether (PCDPE, Table 3) channel or if the PCDPE signal is less than 10% of the PCDF signal.

13.0 CALCULATIONS:

13.1. For gas chromatographic peaks that have met specified criteria calculate the concentration of the PCDD or PCDF compounds using the formula:

$$Cx = \frac{A_x \times Q_{is}}{A_{is} \times W \times RRF\,(n)}$$

Where:

C_x = concentration of unlabeled PCDD/PCDF congeners (or group of coeluting

isomers within an homologous series) in pg/g,

A_x = sum of the integrated ion abundances of the quantitation ions (Table 3) for unlabeled PCDDs/PCDFs,

A_{is} = sum of the integrated ion abundances of the quantitation ions (Table 3) for the labeled internal standards,

Q_{is} = quantity, in pg, of the internal standard added to the sample before extraction,

W = weight, in g, of the sample (solid or liquid), and

RRF = calculated mean relative response factor for the analyte.

13.2. Calculate the percent recovery of the nine internal standards measured in the sample extract, using the formula:

$$\text{Internal standard percent recovery} = \frac{A_{is} \times Q_{rs} \times 100}{Q_{is} \times A_{rs} \times RRF\,(m)}$$

Where:

A_{is} = sum of the integrated ion abundances of the quantitation ions (Table 3) for the labeled internal standard,

A_{rs} = sum of the integrated ion abundances of the quantitation ions (Table 3) for the labeled recovery standard; the selection of the recovery standard depends on the type of congeners (Table 7),

Q_{is} = quantity, in pg, of the internal standard added to the sample before extraction,

Q_{rs} = quantity, in pg, of the recovery standard added to the cleaned-up sample residue before HRGC/HRMS analysis, and

RRF (m) = calculated mean relative response factor for the labeled internal standard relative to the appropriate (see Table 7) recovery standard.

13.3. If the concentration in the final extract of any of the fifteen 2,3,7,8-substituted PCDD/PCDF compound exceeds the dynamic range of the instrument (i.e., saturation in a mass channel) then solvent will be added to the extract to bring the signal level into the instrument's dynamic range. The project manager is notified of all instances of saturation so the client can be notified.

13.3.1. The total concentration for each homologous series of PCDD and PCDF is calculated by summing up the concentrations of all positively identified isomers of each homologous series. Therefore, the total should also include the 2,3,7,8-substituted congeners. The total number of GC signals included in the homologous total concentration value must be specified in the report.

13.3.2. Sample Specific Estimated Detection Limit - The sample specific estimated detection limit (EDL) is the concentration of a given analyte required to produce a signal with a peak height of at least 2.5 times the background signal level. An EDL is calculated for each 2,3,7,8-substituted congener that is not identified, regardless of whether or not other non-2,3,7,8-substituted isomers are present. Two methods of calculation can be used, depending on the type of response produced during the analysis of a particular sample.

13.3.3. Samples giving a response for at least one quantitation ion that is less than 2.5 times the background level.

13.3.3.1. For determination of EDLs:

- Use the expression for EDL (specific 2,3,7,8- substituted PCDD/PCDF) below to calculate an EDL for each absent 2,3,7,8- substituted PCDD/PCDF (i.e., S/N < 2.5). The background level is determined by measuring the range of the noise (peak to peak) for the two quantitation ions (Table 6) of a particular 2,3,7,8-substituted isomer within an homologous series, in the region of the SICP trace corresponding to the elution of the internal standard (if the congener possesses an internal standard) or in the region of the SICP where the congener is expected to elute by comparison with the routine calibration data (for those congeners that do not have a ^{13}C-labeled standard), multiplying that noise height by 2.5, and relating the product to an estimated concentration that ould produce that peak height.

  Use the formula:

$$\text{EDL (specific 2,3,7,8-Subst. PCDD/PCDF)} = \frac{2.5 \times H_x \times Q_{is}}{H_{is} \times W \times \overline{RF_n}}$$

  Where:

  EDL = estimated detection limit for homologous 2,3,7,8- substituted PCDDs/PCDFs.

  H_x = sum of the height of the noise level for each quantitation ion (Table 6) for the unlabeled PCDDs/PCDFs, measured as shown in Figure 6.

  H_{is} = sum of the height of the noise level for each quantitation ion (Table 6) for the labeled internal standard, measured as shown in Figure 6.

  W, RF_n, and Q_{is} retain the same meanings as defined in Section 13.1.

13.3.3.2. Samples characterized by a response above the background level with a S/M of at least 2.5 for both quantitation ions (Tables 6 and 9):

- When the response of a signal having the same retention time as a 2,3,7,8-substituted congener has a S/N in excess of 235 and does not meet any of the other qualitative identification criteria listed in Section 12.4, calculate the "Estimated Maximum Possible Concentration" (EMPC) according to the expression shown in Section. 13.1, except that A_x in Section 13.1 should represent the sum of the area under the smaller peak and of the other peak area calculated using the theoretical chlorine isotope ratio.

13.3.4. Samples characterized by a response above the background level with a S/N of at least 2.5 for both quantitation ions.

- When the response of a signal having the same retention time (Section 12.4.1) as a 2,3,7,8-substituted congener has a S/N in excess of 2.5 and does not meet ion ratio requirements (Section 12.4.2) (Table 5) calculate the "Estimated Maximum Possible Concentration" (EMPC) according to the expression shown in Section 13.1, except that Ax should represent the sum of the area under either peak and of the other peak area calculated using the theoretical chlorine isotope ratio giving the smallest calculated total peak area.

13.4. The relative percent difference (RPD) of any duplicate sample results are calculated as follows:

$$RPD = \frac{S_1 - S_2}{(S_1 + S_2)/2} \times 100$$

S_1 and S_2 represent sample and duplicate sample results.

13.5. Calculation of percent recovery

Accuracy is estimated from the recovery of spiked analytes from the matrix of interest. Laboratory performance in a clean matrix is estimated from the recovery of analytes in the LCS. Calculate the recovery of each spiked analyte in the matrix spike, matrix spike duplicate (if performed) and LCS according t othe following formula.

$$\text{Recovery} = \%R = \frac{C_s - C_u}{C_n} \times 100$$

Where:

C_s = Measured concentration of the spiked sample aliquot.
C_u = Measured concentration of the unspiked sample aliquot (use 0 for the LCS).
C_n = Nominal (theoretical) concentration increase that results from spiking the sample, or the nominal concentration of the spiked aliquot (for LCS).

13.6. The 2,3,7,8-TCDD toxicity equivalents (TE) of PCDDs and PCDFs present in the sample are calculated, if requested by the data user, according to the method recommended by the Chlorinated Dioxins Workgroup (CDWG) of the EPA and the Center for Disease Control (CDC). This method assigns a 2,3,7,8-TCDD toxicity equivalency factor (TEF) to each of the fifteen 2,3,7,8- substituted PCDDs and PCDFs (Table 3) and the OCDD and OCDF, as shown in Table 10. The 2,3,7,8-TCDD equivalent of the PCDDs and PCDFs present in the sample is calculated by summing the TEF times their concentration for each of the compounds or groups of compounds listed in Table 10.

14.0 POLLUTION PREVENTION AND WASTE MANAGEMENT:

14.1. All appropriate pollution prevention procedures and waste management procedures as described in the DAT Waste Management Plan must be utilized by all personnel involved in the preparation and analysis of samples.

15.0 OUT OF CONTROL OR UNNACCEPTABLE DATA:

15.1. Raw data that is reported under failed QC criteria must be flagged as such. The analyst must provide an explanation of the corrective actions attempted and/ or applied and the reason for the flagged data.

16.0 REFERENCES:

16.1. EPA Method 8290: Polychlorinated Dibenzodioxins (PCDDs) and Polychlorinated Dibenzofurans (PCDFs) by High-Resolution Gas Chromatography/High-Resolution Mass Spectrometry (HRGC/HRMS), Revision 0, September 1994.

16.2. DAT, Quality Assurance Manual, Rev4.2, September 2005.

16.3. DAT, Waste Management Plan, September 2001.

TABLE 1:
COMPOSITION OF THE INITIAL CALIBRATION SOLUTIONS

Compound	Concentrations (pg/µL) Sol. Number: 1	2	3	4	5
Unlabeled Analytes					
2,3,7,8-TCDD	0.5	1	5	50	100
2,3,7,8-TCDF	0.5	1	5	50	100
1,2,3,7,8-PeCDD	2.5	5	25	250	500
1,2,3,7,8-PeCDF	2.5	5	25	250	500
2,3,4,7,8-PeCDF	2.5	5	25	250	500
1,2,3,4,7,8-HxCDD	2.5	5	25	250	500
1,2,3,6,7,8-HxCDD	2.5	5	25	250	500
1,2,3,7,8,9-HxCDD	2.5	5	25	250	500
1,2,3,4,7,8-HxCDF	2.5	5	25	250	500
1,2,3,6,7,8-HxCDF	2.5	5	25	250	500
1,2,3,7,8,9-HxCDF	2.5	5	25	250	500
2,3,4,6,7,8-HxCDF	2.5	5	25	250	500
1,2,3,4,6,7,8-HpCDD	2.5	5	25	250	500
1,2,3,4,6,7,8-HpCDF	2.5	5	25	250	500
1,2,3,4,7,8,9-HpCDF	2.5	5	25	250	500
OCDD	5	10	50	500	1000
OCDF	5	10	50	500	1000
Internal Standards					
$^{13}C_{12}$-2,3,7,8-TCDD	100	100	100	100	100
$^{13}C_{12}$-1,2,3,7,8-PeCDD	100	100	100	100	100
$^{13}C_{12}$-1,2,3,6,7,8-HxCDD	100	100	100	100	100
$^{13}C_{12}$-1,2,3,4,6,7,8-HpCDD	100	100	100	100	100

TABLE 1: CONTINUED

Compound	Concentrations (pg/µL) Sol. Number: 1	2	3	4	5
Internal Standards Continued					
$^{13}C_{12}$-OCDD	200	200	200	200	200
$^{13}C_{12}$-2,3,7,8-TCDF	100	100	100	100	100
$^{13}C_{12}$-1,2,3,7,8-PeCDF	100	100	100	100	100
$^{13}C_{12}$-1,2,3,6,7,8-HxCDF	100	100	100	100	100
$^{13}C_{12}$-1,2,3,4,6,7,8-HpCDF	100	100	100	100	100
Surrogate Standards					
$^{37}Cl_4$-2,3,7,8-TCDD	60	80	100	120	140
$^{13}C_{12}$-2,3,4,7,8-PeCDF	60	80	100	120	140
$^{13}C_{12}$-1,2,3,4,7,8-HxCDD	60	80	100	120	140
$^{13}C_{12}$-1,2,3,4,7,8-HxCDF	60	80	100	120	140
$^{13}C_{12}$-1,2,3,4,7,8,9-HpCDF	60	80	100	120	140
Alternate Standard					
$^{13}C_{12}$-1,2,3,7,8,9-HxCDF	60	80	100	120	140
$^{13}C_{12}$-2,3,4,6,7,8-HxCDF	60	80	100	120	140
Recover Standards					
$^{13}C_{12}$-1,2,3,4-TCDD	100	100	100	100	100
$^{13}C_{12}$-1,2,3,7,8,9-HxCDD	100	100	100	100	100

TABLE 2:
GAS CHROMATOGRAPHY CONDITIONS

	Primary Column	Confirmation Column
Column type	DB-5	DB-Dioxin
Length (m)	60	60
i.d. (mm)	0.25	0.25
Film Thickness (um)	0.25	0.15
Carrier Gas	Helium	Helium
Carrier Gas Flow (mL/min)	1-2	1.0
Injection Mode	←splitles→	
Purge On	1.7 min.	1.7 min.
Initial Temperature (°C)	180	180
Initial Time	1 min.	1 min.
Flow Rate	2.5° per/min	2.5° per/min
Final Temperature	270°C	270°C
Final Time	3 min.	3 min.

TABLE 3: ELEMENTAL COMPOSITIONS AND EXACT MASSES OF THE IONS MONITORED BY HRGC/HRMS FOR PCDDs AND PCDFs

Descriptor Number	Accurate Mass[2]	Ion Type	Elemental Composition	Analyte
2	292.9825	LOCK	C_7F_{11}	PFK
	303.9016	M	$C_{12}H_4{}^{35}Cl_4O$	TCDF
	305.8987	M+2	$C_{12}H_4{}^{35}Cl_3{}^{37}ClO$	TCDF
	315.9419	M	$^{13}C_{12}H_4{}^{35}Cl_4O$	TCDF (S)
	317.9389	M+2	$^{13}C_{12}H_4{}^{35}Cl_3{}^{37}ClO$	TCDF (S)
	319.8965	M	$C^{12}H_4{}^{35}Cl_4O_2$	TCDD
	321.8936	M+2	$C_{12}H_4{}^{35}Cl_3{}^{37}ClO_2$	TCDD
	327.8847	M	$C_{12}H_4{}^{37}Cl_4O_2$	TCDD (S)
	330.9792	QC	C_7F_{13}	PFK
	331.9368	M	$^{13}C_{12}H_4{}^{35}Cl_4O_2$	TCDD (S)
	333.9339	M+2	$^{13}C_{12}H_4{}^{35}Cl_3{}^{37}ClO_2$	TCDD (S)
	375.8364	M+2	$C_{12}H_4{}^{35}Cl_5{}^{37}ClO$	HxCDPE
	339.8597	M+2	$C_{12}H_3{}^{35}Cl_4{}^{37}ClO$	PeCDF
	341.8567	M+2	$C_{12}H_3{}^{35}Cl_3{}^{37}Cl_2O$	PeCDF
	351.9000	M+4	$^{13}C_{12}H_3{}^{35}Cl_4{}^{37}ClO$	PeCDF (S)
	353.8970	M+2	$^{13}C_{12}H_3{}^{35}Cl_3{}^{37}Cl_2O$	PeCDF (S)
	355.8546	M+4	$C_{12}H_3{}^{35}Cl_4{}^{37}ClO$	PeCDD
	357.8516	M+2	$C_{12}H_3{}^{35}Cl_3{}^{37}Cl_2O_2$	PeCDD
	367.8949	M+4	$^{13}C_{12}H_3{}^{35}Cl_4{}^{37}ClO_2$	PeCDD (S)
	369.8919	M+2	$^{13}C_{12}H_3{}^{35}Cl_3{}^{37}Cl_2O_2$	PeCDD (S)
	409.7974	M+4	$C_{12}H_3{}^{35}Cl_6{}^{37}ClO$	HpCDPE
3	373.8208	M+2	$C_{12}H_2{}^{35}Cl_5{}^{37}ClO$	HxCDF
	375.8178	M+2	$C_{12}H_2{}^{35}Cl_4{}^{37}Cl_2O$	HxCDF
	383.8639	M	$^{13}C_{12}H_2{}^{35}Cl_6O$	HxCDF (S)

TABLE 3 CONTINUED

Descriptor Number	Accurate Mass[2]	Ion Type	Elemental Composition	Analyte
3 Continued	385.8610	M+2	$^{13}C_{12}H_2{}^{35}Cl_5{}^{37}ClO$	HxCDF (S)
	389.8157	M+2	$C_{12}H_2{}^{35}Cl_5{}^{37}ClO_2$	HxCDD
	391.8127	M+4	$C_{12}H_2{}^{35}Cl_4{}^{37}Cl_2O_2$	HxCDD
	392.976	LOCK	C_9F_{15}	PFK
	401.8559	M+2	$^{13}C_{12}H_2{}^{35}Cl_5{}^{37}ClO_2$	HxCDD (S)
	403.8529	M+4	$^{13}C_{12}H_2{}^{35}Cl_4{}^{37}Cl_2O_2$	HxCDD (S)
	445.7555	M+4	$C_{12}H_2{}^{35}Cl_6{}^{37}Cl_2O$	OCDPE
	430.9729	QC	C_9F_{13}	PFK
4	407.7818	M+2	$C_{12}H^{35}Cl_6{}^{37}ClO$	HpCDF
	409.7789	M+4	$C_{12}H^{35}Cl_5{}^{37}Cl_2O$	HpCDF
	417.8253	M	$^{13}C_{12}H^{35}Cl_7O$	HxCDF (S)
	419.8220	M+2	$^{13}C_{12}H^{35}Cl_6{}^{37}ClO$	HxCDF (S)
	423.7766	M+2	$C_{12}H^{35}Cl_6{}^{37}ClO_2$	HpCDD
	425.7737	M+4	$C_{12}H^{35}Cl_5{}^{37}Cl_2O_2$	HpCDD
	435.8169	M+2	$^{13}C_{12}H^{35}Cl_6{}^{37}ClO_2$	HpCDD (S)
	437.8140	M+4	$^{13}C_{12}H^{35}Cl_5{}^{37}Cl_2O_2$	HpCDD (S)
	479.7165	M+4	$C_{12}H^{35}Cl_7{}^{37}Cl_2O$	NCDPE
	430.9729	LOCK	C_9F_{17}	PFK
	441.7528	M+2	$C_{12}{}^{35}Cl_7{}^{37}ClO$	OCDF
	443.7399	M+4	$C_{12}{}^{35}Cl_6{}^{37}Cl_2O$	OCDF
	457.7377	M+2	$C_{12}{}^{35}Cl_7{}^{37}ClO_2$	OCDD
	459.7348	M+4	$C_{12}{}^{35}Cl_6{}^{37}Cl_2O_2$	OCDD
	469.7779	M+2	$^{13}C_{12}{}^{35}Cl_7{}^{37}ClO_2$	OCDD (S)
	471.7750	M+4	$^{13}C_{12}{}^{35}Cl_6{}^{37}Cl_2O_2$	OCDD (S)

TABLE 3 CONTINUED

Descriptor Number	Accurate Mass[2]	Ion Type	Elemental Composition	Analyte
4 Continued	513.6775	M+4	$C_{12}{}^{35}Cl_6{}^{37}Cl_2O$	DCDPE
	442.9728	QC	$C_{10}F_{17}$	PFK

a) The following nuclidic masses were used:

H	=	1.007825
C	=	12.000000
^{13}C	=	13.003355
F	=	18.9984
S	=	Labeled Standard
QC	=	Ion Selected for Monitoring the Instrument Stability During the GC/MS Analysis

b) Descriptor 1 contains mono-, di- and trichlorinated dibenzodioxins and dibenzofuranse that are not quantitated by method 8290.

TABLE 4: INITIAL AND CONTINUING CALIBRATION RESPONSE FACTOR MINIMUM REQUIREMENTS

Compound	Relative Response Factors		
	I-Call %RSD	Con-Cal % Delta Beginning	Con-Cal %Delta Ending
Unlabeled Analytes			
2,3,7,8-TCDD	20	20	25
2,3,7,8-TCDF	20	20	25
1,2,3,7,8-PeCDD	20	20	25
1,2,3,7,8-PeCDF	20	20	25
2,3,4,7,8-PeCDF	20	20	25
1,2,3,4,7,8-HxCDD	20	20	25
1,2,3,6,7,8-HxCDD	20	20	25
1,2,3,7,8,9-HxCDD	20	20	25
1,2,3,4,7,8-HxCDF	20	20	25
1,2,3,6,7,8-HxCDF	20	20	25
1,2,3,7,8,9-HxCDF	20	20	25
2,3,4,6,7,8-HxCDF	20	20	25
1,2,3,4,6,7,8-HpCDD	20	20	25
1,2,3,4,6,7,8-HpCDF	20	20	25
1,2,3,4,7,8,9-HpCDF	20	20	25
OCDD	20	20	25
OCDF	20	20	25
Internal Standards	30	30	35
$^{13}C_{12}$-2,3,7,8-TCDD	30	30	35
$^{13}C_{12}$-1,2,3,7,8-PeCDD	30	30	35
$^{13}C_{12}$-1,2,3,6,7,8-HxCDD	30	30	35

TABLE 4 CONTINUED

Compound	Relative Response Factors		
	I-Call %RSD	Con-Cal % Delta Beginning	Con-Cal %Delta Ending
Internal Standards Continued			
$^{13}C_{12}$-1,2,3,4,6,7,8-HpCDD	30	30	35
$^{13}C_{12}$-OCDD	30	30	35
$^{13}C_{12}$-2,3,7,8-TCDF	30	30	35
$^{13}C_{12}$-1,2,3,7,8-PeCDF	30	30	35
$^{13}C_{12}$-1,2,3,6,7,8-HxCDF	30	30	35
$^{13}C_{12}$-1,2,3,4,6,7,8-HpCDF	30	30	35
Surrogate Standards			
$^{37}Cl_4$-2,3,7,8-TCDD	30	30	35
$^{13}C_{12}$-2,3,4,7,8-PeCDF	30	30	35
$^{13}C_{12}$-1,2,3,4,7,8-HxCDD	30	30	35
$^{13}C_{12}$-1,2,3,4,7,8-HxCDF	30	30	35
$^{13}C_{12}$-1,2,3,4,7,8,9-HpCDF	30	30	35
Alternate Standard			
$^{13}C_{12}$-1,2,3,7,8,9-HxCDF	30	30	35
$^{13}C_{12}$-2,3,4,6,7,8-HxCDF	30	30	35

TABLE 5: ION-ABUNDANCE RATIO ACCEPTABLE RANGES FOR PCDDs AND PCDFs

Number of Chlorine Atoms	Ion Type	Theoretical Ration	Control Limits	
			Lower	Upper
4	M/M+2	0.77	0.65	0.89
5	M+2/M+4	1.55	1.32	1.78
6	M+2/M+4	1.24	1.05	1.43
6a	M/M+2	0.51	0.43	0.59
7b	M/M+2	0.44	0.37	0.51
7	M+2/M+4	1.04	0.88	1.20
8	M+2/M+4	0.89	0.76	1.02

a) Used only for ^{13}C-HxCDF

b) Used only for ^{13}C-HpCDF

TABLE 6: UNLABELED ANALYTES QUANTITATION RELATIONSHIPS

Analyte	Standard Used During Quantitation
2,3,7,8-TCDD	$^{13}C_{12}$-2,3,7,8-TCDD
Other TCDDs	$^{13}C_{12}$-2,3,7,8-TCDD
1,2,3,7,8-PeCDD	$^{13}C_{12}$-1,2,3,7,8-PeCDD
Other PeCDDs	$^{13}C_{12}$-1,2,3,7,8-PeCDD
1,2,3,4,7,8-HxCDD	$^{13}C_{12}$-1,2,3,6,7,8-HxCDD
1,2,3,6,7,8-HxCDD	$^{13}C_{12}$-1,2,3,6,7,8-HxCDD
1,2,3,7,8,9-HxCDD	$^{13}C_{12}$-1,2,3,6,7,8-HxCDD
Other HxCDDs	$^{13}C_{12}$-1,2,3,6,7,8-HxCDD
1,2,3,4,6,7,8-HpCDD	$^{13}C_{12}$-1,2,3,4,6,7,8-HpCDD
Other HpCDDs	$^{13}C_{12}$-1,2,3,4,6,7,8-HpCDD
OCDD	$^{13}C_{12}$-OCDD
2,3,7,8-TCDF	$^{13}C_{12}$-2,3,7,8-TCDF
Other TCDFs	$^{13}C_{12}$-2,3,7,8-TCDF
1,2,3,7,8-PeCDF	$^{13}C_{12}$-1,2,3,7,8-PeCDF
2,3,4,7,8-PeCDF	$^{13}C_{12}$-1,2,3,7,8-PeCDF
Other PeCDFs	$^{13}C_{12}$-1,2,3,7,8-PeCDF
1,2,3,4,7,8-HxCDF	$^{13}C_{12}$-1,2,3,6,7,8-HxCDF
1,2,3,6,7,8-HxCDF	$^{13}C_{12}$-1,2,3,6,7,8-HxCDF
1,2,3,7,8,9-HxCDF	$^{13}C_{12}$-1,2,3,6,7,8-HxCDF

TABLE 6 CONTINUED

Analyte	Standard Used During Quantitation
2,3,4,6,7,8-HxCDF	$^{13}C_{12}$-1,2,3,6,7,8-HxCDF
Other HxCDFs	$^{13}C_{12}$-1,2,3,6,7,8-HxCDF
1,2,3,4,6,7,8-HpCDF	$^{13}C_{12}$-1,2,3,4,6,7,8-HpCDF
1,2,3,4,7,8,9-HpCDF	$^{13}C_{12}$-1,2,3,4,6,7,8-HpCDF
Other HpCDFs	$^{13}C_{12}$-1,2,3,4,6,7,8-HpCDF
OCDF	$^{13}C_{12}$-OCDF

TABLE 7: INTERNAL STANDARDS QUANTITATION RELATIONSHIPS

Internal Standard	Standard Used During Percent Recovery Determination
$^{13}C_{12}$-2,3,7,8-TCDD	$^{13}C_{12}$-1,2,3,4-TCDD
$^{13}C_{12}$-1,2,3,7,8-PeCDD	$^{13}C_{12}$-1,2,3,4-TCDD
$^{13}C_{12}$-1,2,3,6,7,8-HxCDD	$^{13}C_{12}$-1,2,3,7,8,9-HxCDD
$^{13}C_{12}$-1,2,3,4,6,7,8-HpCDD	$^{13}C_{12}$-1,2,3,7,8,9-HxCDD
$^{13}C_{12}$-OCDD	$^{13}C_{12}$-1,2,3,7,8,9-HxCDD
$^{13}C_{12}$-2,3,7,8-TCDF	$^{13}C_{12}$-1,2,3,4-TCDD
$^{13}C_{12}$-1,2,3,7,8-PeCDF	$^{13}C_{12}$-1,2,3,4-TCDD
$^{13}C_{12}$-1,2,3,6,7,8-HxCDF	$^{13}C_{12}$-1,2,3,7,8,9-HxCDD
$^{13}C_{12}$-1,2,3,4,6,7,8-HpCDF	$^{13}C_{12}$-1,2,3,7,8,9-HxCDD

TABLE 8: SURROGATE/ALTERNATE STANDARDS QUANTITATION RELATIONSHIPS

Surrogate/Alternate/Cleanup Standard	Standard Used During Percent Recovery Determination
$^{37}Cl_4$-2,3,7,8-TCDD	$^{13}C_{12}$-1,2,3,4-TCDD
$^{13}C_{12}$-2,3,4,7,8-PeCDF	$^{13}C_{12}$-1,2,3,4-TCDD
$^{13}C_{12}$-1,2,3,4,7,8-HxCDD	$^{13}C_{12}$-1,2,3,7,8,9-HxCDD
$^{13}C_{12}$-1,2,3,4,7,8-HxCDF	$^{13}C_{12}$-1,2,3,7,8,9-HxCDD
$^{13}C_{12}$-1,2,3,7,8,9-HpCDF	$^{13}C_{12}$-1,2,3,7,8,9-HxCDD
$^{13}C_{12}$-1,2,3,7,8,9-HxCDF	$^{13}C_{12}$-1,2,3,7,8,9-HxCDD
$^{13}C_{12}$-2,3,4,6,7,8-HxCDF	$^{13}C_{12}$-1,2,3,7,8,9-HxCDD

TABLE 9: TYPES OF MATRICES, SAMPLE SIZES AND 2,3,7,8-TCDD-BASED METHOD CALIBRATION LIMITS (Parts per Trillion)

	Water	Soil Sediment Paper Pulp	Fly Ash	Fish Tissue	Human Adipose Tissue	Sludges, Fuel Oil	Still-Bottom
Lower MCLa	0.01	1.0	1.0	1.0	1.0	5.0	10
Upper MCLa	2	200	200	200	200	1000	2000
Weight (g)	1000	10	10	10	10	2	1
IS Spiking Levels (ppt)	1	100	100	100	100	500	1000
Final Extr. Vol. (µL)	10-50	10-50	50	10-50	10-50	50	50

a = For other congeners multiply the values by 1 for TCDF/PeCDD/PeCDF, by 2.5 for HxCDD/HxCDF/HpCDD/HpCDF, and by 5 for OCDD/OCDF.

FIGURE 4

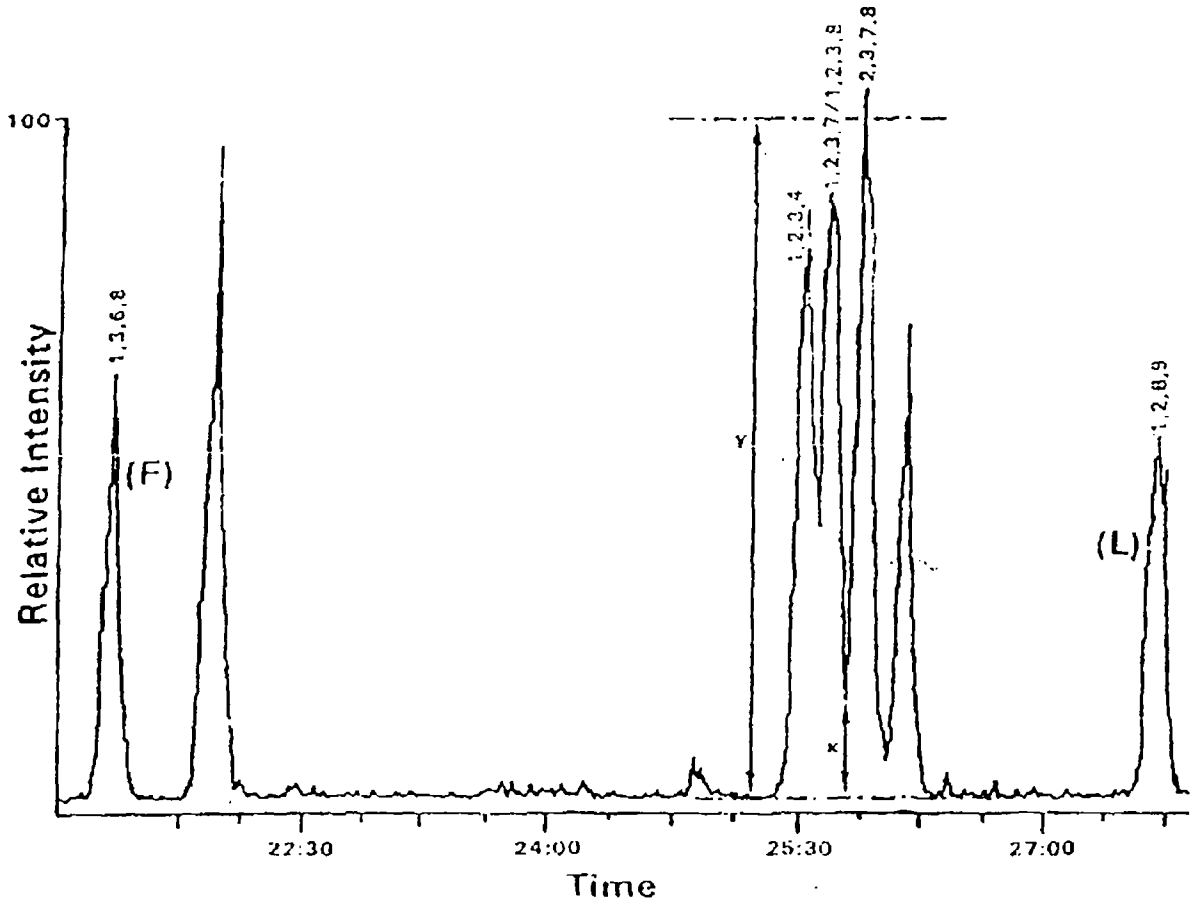

Selected ion current profile for m/z 322 (TCDDs) produced by MS analysis of the GC performance check solution on a 60 m DB-5 fused silica capillary column under the conditions listed in Sec. 7.6.

TABLE 10:
2,3,7,8-TCDD Toxicity Equivalency Factors (TEFs) for the Polychlorinated Dibenzodioxins and Dibenzofurans

Number	Compound (s)	TEF[a]
1	2,3,7,8-TCDD	1.00
2	1,2,3,7,8-PeCDD	0.50
3	1,2,3,6,7,8-HxCDD	0.10
4	1,2,3,7,8,9-HxCDD	0.10
5	1,2,3,4,7,8-HxCDD	0.10
6	1,2,3,4,6,7,8-HpCDD	0.01
7	1,2,3,4,6,7,8,9-OCDD	0.001
8	2,3,7,8-TCDF	0.1
9	1,2,3,7,8-PeCDF	0.05
10	2,3,4,7,8-PeCDF	0.5
11	1,2,3,6,7,8-HxCDF	0.1
12	1,2,3,7,8,9-HxCDF	0.1
13	1,2,3,4,7,8-HxCDF	0.1
14	2,3,4,6,7,8-HxCDF	0.1
15	1,2,3,4,6,7,8-HpCDF	0.01
16	1,2,3,4,7,8,9-HpCDF	0.01
17	1,2,3,4,6,7,8,9-OCDF	0.001

[a] Taken from "Interim Procedures for Estimating Risks Associated with Exposures to Mixtures of Chlorinated Dibenzo-p-Dioxin and -Dibenzofurans (CDDs and CDFs) and 1989 Update:, (EPA/625/3-89/016, March 1989).

D A T Laboratory, Inc.
Controlled Copy
Copy 4 of 6
Approved by Farrah Carshan
Date 09/20/2006

SOP - 155

STANDARD OPERATING PROCEDURE (SOP)
FOR THE EXTRACTION OF SAMPLES FOR DETERMINATION OF PCDDs AND PCDFs
BY HRGC/HRMS USING METHOD 8290

Reviewed by: _____ Date: 8/21/06
Quality Assurance Officer

Approved by: _____ Date: 8/21/06
President, DAT Inc.

DATA ANALYSIS TECHNOLOGIES, INC (DAT)
7715 CORPORATE BLVD.
PLAIN CITY, OH 43064

Date:	Reviewed by:	Date	Reviewed by:

PROCEDURE

1.0 SCOPE AND APPLICATION

1.1. This SOP provides procedures for the sample preparation and extraction of water, soil, sediment, sludge, tissue and other sample matrices to be analyzed by high resolution gas chromatography/high resolution mass spectrometry (HRGC/HRMS).

1.2. Following extraction, the analysis is performed with high resolution mass spectrometry as described in DAT SOP #92.

2.0 SUMMARY OF METHOD:

2.1. This procedure uses matrix specific extraction and analyte specific cleanup for HRGC/HRMS analysis techniques.

2.2. A specified amount of a sample of soil, sediment, fly ash, water, sludge (including paper pulp), still bottom, fish tissue, or human adipose tissue is spiked with a solution containing specified amounts of nine isotopically ($^{13}C_{12}$) labeled PCDDs/PCDFs listed in Column 1 of Table 1. The sample is then extracted according to a matrix specific extraction procedure. Aqueous samples that are judged to contain 1 percent or more solids, and solid samples that show an aqueous phase are filtered, the solid phase (including the filter) and the aqueous phase extracted separately, and the extracts combined before extract cleanup. The extraction procedures are:

2.2.1. Toluene: Soxhlet extraction for soil, sediment, fly ash, and paper pulp samples.

2.2.2. Methylene chloride: liquid-liquid extraction for water samples.

2.2.3. Toluene: Dean-Stark extraction for fuel oil and aqueous sludge samples.

2.2.4. Toluene extraction for still bottom samples.

2.2.5. Hexane/methylene chloride: Soxhlet extraction or methylene chloride, soxhlet extraction for fish tissue samples.

2.2.6. Methylene chloride extraction for human adipose tissue samples.

2.2.7. As an option, all solid samples (wet or dry) may be extracted with toluene using a Soxhlet/Dean Stark extraction system.

2.3. The extracts are submitted to an acid-base washing treatment and dried. Following a solvent exchange step, the extracts are cleaned up by column chromatography on alumina, silica gel, and activated carbon.

2.3.1. The extracts from adipose tissue samples are treated with silica gel impregnated with sulfuric

acid before chromatography on acidic gel, neutral alumina, and activated carbon.

2.3.2. Fish tissue and paper pulp extracts are subjected to an acid wash treatment only, prior to chromatography on alumina and activated carbon.

2.4. The preparation of the final extract for HRGC/HRMS analysis is accomplished by adding 10 to 50 uL (depending on the matrix) of a nonane solution containing 50 pg/uL of the recovery standards $^{13}C_{12}$-1,2,3,4-TCDD and $^{13}C_{12}$-1,2,3,7,8,9-HxCDD (Table 1). The former is used to determine the percent recoveries of tetra- and penthachlorinated PCDD/PCDF congeners, while the later is used to determine the percent recoveries of the hexa-, hepta-, and octachlorinated PCDD/PCDF congeners.

3.0 DEFINITIONS

3.1. See Section 13.0.

4.0 CONTAMINATION AND INTERFERENCES

4.1. Solvents, reagents, glassware and other sample processing hardware may yield discrete artifacts or elevated baselines that may cause misinterpretation of the chromatographic data. A method blank must be analyzed to prove that this hardware is free from contamination. Analysts should avoid using PVC gloves.

4.2. The use of high purity reagents and solvents helps minimize interference problems. Purification of solvents by distillation in all glass systems may be necessary.

4.3. Interferants co-extracted from the sample will vary considerably from matrix to matrix. PCDDs and PCDFs are often associated with other interfering chlorinated substances such as polychlorinated biphenyls (PCBs), polychlorinated diphenyl ethers (PCDPESs), polychlorinated napthalenes, and polychlorinated alkyldibenzofurans, that may be found at concentrations several orders of magnitude higher than the analytes of interest. The clean-up technique described in this SOP must be used to reduce interference.

4.4. Proper cleaning of glassware is extremely important, because glassware may not only contaminate the samples but may also remove the analytes of interest by adsorption on the glass surface.

4.4.1. All glassware used in extractions for Dioxins/Furans should be rinsed with the last solvent used, and then methanol.

4.4.2. Wash all glassware with warm tap water and a detergent solution as soon after use as practical. Rinse with tap water. Sonication of glassware containing a detergent solution for approximately 30 seconds may aid cleaning. Glassware with removable parts, particularly separatory funnels with fluoropolymer stopcocks, must be disassembled prior to washing.

4.4.3. After detergent washing, glassware must be rinsed immediately with the following: organic-

free reagent water, methanol, methylene chloride, toluene, and then methanol.

4.4.4. Allow the glassware to drain/dry in a fume hood.

4.4.5. Rinse again with organic-free reagent water.

4.4.6. Do not bake reusable glassware in an oven as a routine part of cleaning. Baking may be warranted after particularly dirty samples are encountered but should be minimized, as repeated baking of glassware may cause active sites on the glass surface that will irreversibly adsorb CDD/ CDFs.

4.4.7. If baking is needed, bake at a temperature of 180^0C for 15 minutes to remove residue.

4.4.8. After glassware has dried, cap ends with clean aluminum foil and store in designated locations in the wet laboratory.

4.4.9. The glassware shall only be used for Dioxins/Furans and Halowax sample preparation.

4.4.10. Immediately prior to use, the Soxhlet apparatus and all separatory funnels are rinsed with methanol, methylene chloride, and toluene.

5.0 SAFETY

5.1. All personnel are required to comply with DAT's Health and Safety Documents as described in the Quality Assurance Manual.

5.2. Because of the extreme toxicity of many of these compounds, the analyst must take the necessary precautions to prevent exposure to materials known or believed to contain PCDDs or PCDFs.

6.0 APPARATUS AND MATERIAL

6.1. Laboratory fume hood of sufficient size to contain the sample preparation equipment listed below.

6.2. Glove box.

6.3. Tissue homogenizer-with stainless steel Macro-shaft and Turbo-shear blade.

6.4. Meat grinder –Hobart, or equivalent, with 3 to 5 mm holes in inner plate.

6.5. Equipment for determining percent moisture.

6.6. Oven-Capable of maintaining a temperature of 110 +/- 5^0 C.

6.7. Dessicator.

6.8. Balances.

6.8.1. Analytical-Capable of weighing 0.1 mg.

6.8.2. Top loading-Capable of weighing 10 mg.

6.9. Extraction Apparatus for Water Samples

6.9.1. pH meter, with combination glass electrode

6.9.2. pH paper, wide range (Hydrion Papers, or equivalent)

6.9.3. Graduated cylinders, one-L capacity and 100 mL capacity

6.9.4. Liquid/liquid extraction-Separatory funnels, 2-L capacity, with fluoropolymer stopcocks.

6.9.5. 500 mL round bottom flasks with funnels

6.10. Soxhlet/Dean-Stark (SDS) extractor for filters and solid/sludge samples.

6.10.1. Soxhlet-50 mm ID, 200 mL capacity with 500 mL round bottom flask

6.10.2. Thimble-43 x 123 to fit Soxhlet.

6.10.3. Moisture trap-Dean Stark or Barret with fluoropolymer stopcock, to fit Soxhlet.

6.10.4. Heating mantle-Hemispherical, to fit 500 mL round bottom flask.

6.10.5. Variable transformer-Powerstat (or equivalent), 100 volt, 10 amp.

6.10.6. Beakers-400 to 500 mL.

6.11. Apparatus for extraction of tissue

6.11.1. Bottle for extraction (if digestion/extraction is using HCl is used)-500-600 mL wide-mouth clear glass with fluoropolymer-lined cap.

6.11.2. Bottle for back extraction-100-200 mL narrow mouth clear glass with fluoropolymer-lined cap.

6.11.3. Ann Arbor Shaker Table- platform-type rotary shaker that produces vigorous agitation.

6.11.4. Rack attached to shaker table to permit agitation of four to nine samples simultaneously.

6.11.5. Beakers-400 to 500 mL.

6.11.6. Spatulas-Stainless steel.

6.12. Filtration Apparatus

6.12.1. Pyrex glass wool-Solvent extracted by SDS for three hours minimum.

6.12.2. Glass funnel- 125 to 250 mL.

6.12.3. Glass-fiber filter paper- Whatman GF/D (or equivalent), to fit glass funnel in Section 8.8.2.

6.12.4. Drying column- 15 to 20 mm ID Pyrex chromatographic column equipped with coarse-glass frit or glass-wool plug.

6.12.5. Buchner funnel-15 cm.

6.12.6. Glass-fiber filter paper-to fit the Buchner funnel in Section 8.8.5.

6.12.7. Filtration flasks- 1.5 to 2.0L, with side arm.

6.12.8. Pressure filtration apparatus-Millipore YT30 142 HW, or equivalent.

6.13. Centrifuge Apparatus

6.13.1. Centrifuge- Capable of rotating 500 mL centrifuge bottles or 15 mL centrifuge tubes at 5,000 rpm minimum.

6.13.2. Centrifuge bottles-500 mL, with screw-caps, to fit centrifuge.

6.13.3. Centrifuge tubes-12 to 15 mL, with screw-caps, to fit centrifuge.

6.14. Cleanup Apparatus

6.14.1. Automated gel permeation chromatograph

6.14.1.1. Column-600 to 700 mm long x 25 mm ID, packed with 70 g of SX-3 Bio-beads.

6.14.1.2. Syringe-10mL, with Luer fitting

6.14.1.3. Syringe filter holder-stainless steel, and glass-fiber or fluoropolymer filters (Gelman 4310, or equivalent).

6.14.1.4. UV detectors-254 nm, preparative or semi-preparative flow cell

6.15. Pipets

6.15.1. Disposable, Pasteur-150 mm long x 5-mm ID

6.15.2. Disposable, serological-10mL (6 mm ID), for the preparation of the carbon columns.

6.16. Glass chromatographic columns

6.16.1. 300 mm 150 mm long x 10.5 mm ID (Kontes K-420155, or equivalent) with coarse-glass frit or glass-wool plug and 250 mL reservoir.

6.16.2. 200 mm long x 1.5 mm ID, with coarse-glass frit or glass-wool plug and 250 mL reservoir.

6.16.3. 300 mm long x 25 mm ID, with 300 mL reservoir and glass or fluoropolymer stopcock.

6.17. Stirring apparatus for batch silica cleanup of tissue extracts.

6.17.1. Mechanical stirrer.

6.17.2. Bottle-500 to 600 mL wide-mouth clear glass.

6.18. Oven-For baking and storage of adsorbents, capable of maintaining a constant temperature (+/_ 5^0C) in the range of 105-250^0C.

6.19. Concentration Apparatus

6.19.1. Buchi Rotavapor R-114 evaporator equipped with a variable temperature water bath.

6.19.2. Vacuum source for rotary evaporator equipped with shutoff valve at the evaporator and vacuum gauge.

6.19.3. Carbon dioxide, CO_2, is used as the coolant, and tap water is used to maintain the vacuum.

6.19.4. Round bottom flask- 500 mL or larger, with ground-glass fitting compatible with the rotary evaporator.

6.19.4.1. Amber glass-2 to 5 mL with fluoropolymer-lined screw cap.

6.19.4.2. Glass - 0.3 mL, conical, with fluoropolymer-lined screw or crimp cap.

6.20. Nitrogen blowdown apparatus – Equipped with water bath controlled in the range of 30-60° C (N-Vap, organomation)

7.0 REAGENTS AND STANDARDS

7.1. pH Adjustment and Back-Extraction

7.1.1. Potassium hydroxide, KOH, ACS grade, 20 percent (w/v) -Dissolve 20 g reagent grade KPH in 100 mL organic-free reagent water.

7.1.2. Sulfuric acid, H_2SO4, concentrated, ACS grade (specific gravity 1.84).

7.1.3. Sodium chloride, NaCl, analytical grade, prepare at 5% (w/v) solution in organic free reagent water.

7.1.4. Potassium carbonate, K_2CO_3, anhydrous, analytical reagent.

7.2. Dessicating agent

7.2.1. Sodium sulfate (powder, anhydrous), Na_2SO4. Purify by heating at 400^0C for 4 hours in a shallow tray, cooled in a dessicator, and stored in a pre-cleaned glass bottle with screw-cap that prevents moisture from entering. If, after heating, the sodium sulfate develops a grayish cast (due to the presence of carbon in the crystal matrix), that batch of reagent is not suitable for use and should be discarded. Extraction with methylene chloride (as opposed to simple rinsing) and baking at a lower temperature may produce sodium sulfate that is suitable for use.

7.2.2. Tissue drying-Sodium sulfate, reagent grade, powdered, treated and stored as above.

7.2.3. Pre-purified nitrogen.

7.3. Solvents for Extraction

7.3.1. Methylene chloride, CH_2Cl_2, high purity.

7.3.2. Hexane, C_6H_{14}, high purity.

7.3.3. Methanol, CH_3OH, high purity.

7.3.4. Nonane, C_9H_{20}, high purity.

7.3.5. Toluene, $C_6H_5CH_3$, high purity.

7.3.6. Cyclohexane, C_6H_{12}, high purity.

7.3.7. White quartz sand, For Soxhlet/Dean-Stark extraction. Bake at 450^0C for four hours minimum.

7.4. Stock Standard Solutions-Purchased pre-mixed from Cambridge Isotope Laboratories with certification to their purity, concentration, and authenticity.

7.4.1. Internal Standard Stock Solution: catalog #EDF-4053 @ 1000 ng/mL in nonane, stored at room temperature.

7.4.2. Surrogate Standard Stock Solution: catalog #EDF-4054 @ 1000 ng/mL in nonane, stored at room temperature.

7.4.3. Recovery Standard Stock Solution: catalog #EDF-4055 @ 500 ng/mL in nonane, stored at room temperature.

7.4.3.1. Sample extracts are spiked with 10 uL or 5 ng/total of 7.4.3.

7.4.4. Alternative Recovery Stock Solution: catalog #PS-46-1,2,3,7,8,9-HxDF$^{13}C_{12}$ @ 50 ng/mL, stored at room temperature.

7.4.5. Method 8290 Matrix Spiking Solution: catalog # EDF-5008, @ 100-500 ng/mL.

7.4.5.1. The Matrix Spike sample extracts are spiked with 40 uL or 4-20 ng/total of 7.4.5.

7.5. Working Standards.

7.5.1. Internal Standard Working Solution- 100 ng/mL standard is prepared by adding 100 uL of 7.4.1 to 900 uL of nonane.

7.5.2. Surrogate Standard Working Solution- 100 ng/mL standard is prepared by adding 1.0 mL of 7.4.2 to 9.0 mL of nonane.

7.5.3. Alternate Recovery Standard- Prepare a 10 ug/mL by pipetting 100uL of the Alternate Recovery Stock Solution (7.4.4) into a screw top dram vial containing 400 uL of nonane.

7.5.3.1. Alternative Recovery Spiking Solution- Prepare a 100 ng/mL standard by adding 10uL of 7.5.3 to 990 uL of nonane.

7.6. Adsorbents for Sample Cleanup

7.6.1. Silica Gel

7.6.1.1. Activated silica gel-80/200 mesh rinsed with methylene chloride, baked at 180^{0}C for a minimum of one hour, cooled in a dessicator, and stored in a pre-cleaned glass bottle with screw-cap that prevents moisture from entering.

7.6.1.2. Alumina-Acidic Silica gel (30% w/ w)-Thoroughly mix 44.0 g of concentrated sulfuric acid with 100.0 g of activated silica gel in a clean container. Break up aggregates with a stirring rod until a uniform mixture is obtained. Store in a bottle with a fluoropolymer-lined screw-cap.

7.6.1.3. Basic silica gel-Thoroughly mix 30 g of 1N sodium hydroxide with 100 g of activated silica gel in a clean container. Break up aggregates with a stirring rod until a uniform mixture is obtained. Store in a bottle with a fluoropolymer-lined screw-cap.

7.6.1.4. Potassium silicate

7.6.1.4.1. Dissolve 56 g of high purity potassium hydroxide in 300 mL of methanol in a 750-1000 mL flat-bottom flask.

7.6.1.4.2. Add 100 g of silica gel and a stirring bar, and stir on a hot plate at 60-70^{0}C for one to two hours.

7.6.1.4.3. Decant the liquid and rinse the potassium silicate with 100 mL portions of methanol, followed by a single rinse with 100 mL of methylene chloride.

7.6.1.4.4. Spread the potassium silicate on solvent-rinsed aluminum foil and dry for two to fours hours in a hood.

7.6.1.4.5. Activate overnight at 200-250^{0}C.

7.6.2. Alumina-Either one of two types of alumina, acid or basic, is used in the cleanup of sample extracts. The same type of alumina must be used for all samples, including those used to demonstrate initial precision and recovery and ongoing precision and recovery.

7.6.2.1. Acid alumina-Activate by heating to 130^{0}C for a minimum of 12 hours.

7.6.2.2. Basic alumina- Activate by heating to 600^{0}C for a minimum of 24 hours. Store at 130^{0}C in a covered flask. Use within five days of baking.

7.6.3. Carbon

7.6.3.1. PX-21 Active Carbon

7.6.3.2. 5.5% w/w PX-21 Silica

7.6.3.3. ID ¼" x 2"L HPLC Column.

7.6.4. Anthropogenic isolation column-Pack the column in Section 6.16.3 from bottom to top with the following:

7.6.4.1. 2 g silica gel

7.6.4.2. 2 g potassium silicate

7.6.4.3. 2 g granular anhydrous sodium sulfate

7.6.4.4. 10 g acid silica gel

7.6.4.5. 2 g granular anhydrous sodium sulfate

7.6.5. Florisil column

7.6.5.1. Florisil-60 to 100 mesh. Soxhlet extract in 500 g portions for 24 hours.

7.6.5.2. Insert a glass wool plug into the tapered end of a graduated serological pipet. Pack

with 1.5 g of Florisil topped with approximately 1 mL of sodium sulfate and a glass wool plug.

7.6.5.3. Activate in an oven at 130-150^{0}C for a minimum of 24 hours and cool for 30 minutes. Use within 90 minutes of cool.

7.7. Reference Matrices-Matrices in which the CDDs/CDFs and interfering compounds are not detected by the analytical method.

7.7.1. Organic-free water –water demonstrated to be free from the analytes of interest and potentially interfering substances at the method detection limit for the analyte(s) of interest.

7.7.2. High-solids reference matrix-Playground sand or similar material. Prepared by extraction with toluene.

7.7.3. Paper reference matrix-Glass-fiber filter, Gelman Type A or equivalent. Cut paper to simulate the surface area of the paper being tested.

7.7.4. Tissue reference material-Corn or other vegetable oil. May be prepared by extraction with toluene.

7.7.5. Other matrices-This method may be verified on any reference material by performing the tests given in Section 9.2.

8.0 SAMPLE COLLECTION, PRESERVATION, AND HANDLING

8.1. Collect samples in amber glass containers following conventional sampling practices. Aqueous samples that flow freely are collected in refrigerated bottles using automatic sampling equipment. Solid samples are collected as grab samples using wide-mouth jars.

8.2. Storage and holding times-All samples, except fish and adipose tissue samples, must be stored at 4°C in the dark, and must be extracted within 30 days of collection. Fish and adipose tissue samples must be stored at -20^{0}C in the dark, and must be extracted within 30 days of collection

8.3. Fish and tissue samples must be frozen upon receipt at the laboratory. Recommended holding times are demonstrated below:

8.4. Grinding or blending of fish samples-If not otherwise specified in a project plan, the whole fish (frozen) should be blended or ground to provide a homogenous sample. The use of a stainless steel meat grinder with a 3 to 5 mm hole size inner plate is recommended. In some circumstances, analysis of fillet or specific organs of fish may be requested. If so requested, the above fish requirement is superseded.

8.5. Aqueous, soil and air samples must be shipped and stored at less than 6°C. Fish and tissue samples must be shipped at less than 4°C and stored in deep freeze at less than -20°C.

sediment, and paper pulp samples. Place a 50-g portion of sample in a suitable centrifuge bottle and centrifuge for 30 minutes at 2,000 rpm. Remove the bottle and mark the interface level on the bottle. Estimate the relative volume of each phase. With a disposable pipet, transfer the liquid layer into a clean bottle. Mix the solid with a stainless steel spatula and remove a portion to be weighed and analyzed for percent dry weight determination, extraction). Return the remaining solid portion to the original sample bottle (empty) or to a clean sample bottle that is properly labeled, and store it as appropriate. Analyze the solid phase by using only the soil, sediment, and paper pulp method. Take note of, and report, the estimated volume of liquid before disposing of the liquid as a liquid waste.

9.0 QUALITY ASSURANCE/QUALITY CONTROL

9.1. A Method Blank (MB) must be extracted with each analytical batch of twenty samples or less. Extraction and analyses of method blanks are required to demonstrate freedom from contamination.

9.2. A Laboratory Spike (LS) must be extracted with each analytical batch of twenty samples or less.

9.3. A Matrix Spike (MS) shall be extracted with each analytical batch of twenty samples or less.

9.4. The laboratory shall spike all samples with labeled compounds to monitor method performance.

9.5. The laboratory shall spike all samples with 40 µL of the internal working standard (7.5.1) and 40 µL of the surrogate standard working solution (7.5.2) to assess method performance on the sample matrix.

9.6. In each batch of samples, locate the sample specified for duplicate analysis, and analyze a second 10g soil or sediment sample portion or 1L water sample or an appropriate amount of the type of matrix under consideration

10.0 SAMPLE PREPARATION

10.1. Sample preparation involves modifying the physical form of the sample so that the CDDs/ CDFs can be extracted efficiently. In general, the samples must be in a liquid form or in the form of *finely divided solids in order for efficient extraction to take place.*

10.1.1. For samples that contain particles, percent solids and particle size are determined using the procedures in Sections 10.6, 10.7, and 10.8 respectively.

10.1.2. Aqueous samples-Because CDD/CDFs may be bound to suspended particles, the preparation of aqueous samples is dependent on the solids content of the sample.

10.1.2.1. Aqueous samples visibly absent of particles are prepared per Section 10.9 and extracted directly using the separatory funnel technique in Section 11.0.

10.1.2.2. Aqueous samples containing visible particles and containing one percent suspended solids or less are prepared using the procedure in Section 10.7. After preparation, the sample is filtered per Section 10.9.3. After filtration, the particles and filter are extracted using the SDS procedure in Section 11.5 and the filtrate is extracted using the separatory funnel procedure in Section 11.0.

10.1.2.3. For aqueous samples containing greater than one percent solids, a sample aliquot sufficient to provide 10 g of dry solids is used, as described in Section 10.10.

10.2. Solid samples are prepared using the procedure described in Section 10.10 followed by extraction via the SDS procedure in Section 11.5.

10.3. Multi-phase samples-The phase(s) containing the CDDs/CDFs is separated from the non-CDD/CDF phase using pressure filtration and centrifugation, as described in Section 10.11. The CDDs/CDFs will be in the organic phase in a multi-phase sample in which an organic phase exists.

10.4. Procedures for grinding, homogenization, and blending of various sample phases are given in Section 10.12.

10.5. Tissue samples- Preparation procedures for fish and other tissues are given in Section 10.13.

10.6. Determination of Percent Suspended Solids

10.6.1. Aqueous liquids and multi-phase samples consisting of mainly an aqueous phase.

10.6.1.1. Dessicate and weigh a GF/D filter (Section 6.12.3) to three significant figures.

10.6.1.2. Filter 10.0 +/- 0.02 mL of well mixed sample through the filter.

10.6.1.3. Dry the filter a minimum of 12 hours at 110 +/- 5^{0}C and cool in a dessicator.

10.6.1.4. Calculate percent solids as follows:

$$\% \text{ solids} = \frac{\text{weight of sample aliquot after drying (g)} - \text{weight of filter (g)}}{10 \text{ g}} \times 100$$

10.7. Non-aqueous liquids, solids, semi-solid samples, and multi-phase samples in which the main phase is not aqueous, but not tissues.

10.7.1. Weigh 5-10 g of sample to three significant figures in a tared beaker.

10.7.2. Dry a minimum of 12 hours at 110 +/- 5^{0}C, and cool in a dessicator.

10.7.3. Calculate percent solids as follows:

$$\% \text{ solids} = \frac{\text{weight of sample aliquot after drying}}{\text{weight of sample aliquot before drying}} \times 100$$

10.8. Determination of Particle Size.

10.8.1. Spread the dried sample from Section 10.7.2 on a piece of filter paper or aluminum foil in a fume hood or glove box.

10.8.2. Estimate the size of the particles in the sample. If the size of the largest particles is greater than 1 mm, the particle size must be reduced to 1mm or less prior to extraction using the procedures in Section 10.12.

10.9. Preparation of Aqueous Samples Containing 1% Suspended Solids or Less

10.9.1. Aqueous samples visibly absent of particles are prepared per the procedure below and are extracted directly using the separatory funnel technique in Section 11.1.

10.9.2. Preparation of sample and quality control aliquots

10.9.2.1. Mark the original level of the sample on the sample bottle for reference. Weigh the sample plus the bottle to +/- 1 g.

10.9.2.2. Add 40 uL of the Surrogate Standard Working Solution (Section 7.5.2) into the sample bottle. Cap the bottle and mix the sample by careful shaking. Allow the sample to equilibrate for one to two hours, with occasional shaking.

10.9.2.3. For each sample or sample batch (to a maximum of 20 samples) to be extracted during the same 12-hour shift, place two 1.0 L aliquots of organic-free reagent water in clean sample bottles or flasks.

10.9.2.3.1. Add 40 uL of the Surrogate Standard Working Solution (Section 7.5.2) into both organic free reagents water aliquots. One of these aliquots will serve as the method blank.

10.9.2.4. Add 40 uL of the method 8290 Matrix Spiking Solution (Section 7.4.5) into the remaining reagent water aliquot. This aliquot will serve as the Ongoing Precision and Recovery (OPR) standard.

10.9.2.5. If the sample(s) contain visible particles, proceed to the following section for filtration of particles.

10.9.3. Filtration of Particles

10.9.3.1. Assemble a Buchner funnel on top of a clean filtration flask. Apply vacuum to the flask, and pour the entire contents of the sample bottle through a glass-fiber filter in the Buchner funnel, swirling the sample remaining in the bottle to suspend any particles.

10.9.3.2. Rinse the sample bottle twice with approximately 5 mL portions of organic-free

reagent water to transfer any remaining particles onto the filter.

10.9.3.3. Rinse any particles off the sides of the Buchner funnel with small quantities of organic-free reagent water.

10.9.3.4. Weigh the empty sample bottle to +/- g. Determine the weight of the sample by difference. Save the bottle for future use.

10.9.3.5. Extract the filtrate using the separatory funnel procedure in Section 11.1.

10.9.3.6. Extract the filter containing the particles using the Soxhlet-Dean Stark (SDS) extraction procedure in Section 11.5

10.10. Preparation of Samples Containing Greater Than 1% Solids

10.10.1. Weigh a well-mixed aliquot of each sample (of the same matrix type) sufficient to provide 10 g of dry solids (based on the solids determination in Section 10.7) into a clean beaker or glass jar.

10.10.2. Add 40 uL of the Surrogate Standard Working Solution (Section 7.4.5) into the sample in Section 10.10.1

10.10.3. For each sample or sample batch (to a maximum of 20 samples) to be extracted during the same 12-hour shift, weigh two 10 g aliquots of the appropriate reference material (Section 7.7.2) into clean beakers or glass jars.

10.10.4. To one of the 10 g aliquots from Section 10.10.3, add 40 uL of the Surrogate Standard Working Solution (Section 7.4.5). This will serve as the Method Blank.

10.10.5. To the remaining 10 g aliquot, add 40 uL of the method 8290 Matrix Spiking Solution (Section 7.4.5). This will serve as the Ongoing Precision and Recovery Standard.

10.10.6. Stir or tumble and equilibrate the aliquots for one to two hours.

10.10.7. Decant excess water. If necessary to remove water, filter the sample through a glass- fiber filter and discard the aqueous liquid.

10.10.8. If particles > 1 mm are present in the sample (as determined by Section 10.8), spread the sample on clean aluminum foil in a hood. After the sample is dry, grind to reduce the particle size (Section 10.12).

10.10.9. Extract the sample and QC aliquots using the SDS procedure in Section 11.5.

10.11. Multi-phase Samples

10.11.1. Using the percent solids determined in Section 10.7, determine the volume of sample that will provide 10 g of solids, up to 1 L of sample.

10.11.2. Pressure filter the amount of sample determined in Section 10.11.1 through Whatman GF/ D glass-fiber filter paper (Section 6.12.3). Pressure filter the blank and OPR aliquots through GF/ D papers also. If necessary to separate the phases and / or settle the solids, centrifuge these aliquots prior to filtration.

10.11.3. Discard any aqueous phase (if present). Remove any non-aqueous liquid present and reserve the maximum amount filtered from the sample (Section 10.11.1) or 10 g, whichever is less, for combination with the solid phase (Section 10.10).

10.11.4. If particles > 1 mm are present in the sample (as determined in Section 10.8) and the sample is capable of being dried, spread the sample and QC aliquots on clean aluminum foil in a hood. After the aliquots are dry or if the sample cannot be dried, reduce the particle size using the procedures in Section 10.12 and extract the reduced particles using the SDS procedure in Section 11.5. If particles > 1mm are not present, extract the particles and filter in the sample and QC aliquots directly using the SDS procedure in Section 11.5.

10.12. Sample Grinding, Homogenization, or Blending-Samples with particle sizes greater than 1 mm (as determined in Section 10.8.2) are subjected to grinding, homogenization, or blending. The method of reducing particle size to less than 1 mm is matrix dependent. In general, hard particles can be reduced by grinding in a Wiley mill or meat grinder, by homogenization, or in a blender.

10.12.1. Each size-reducing preparation procedure on each matrix shall be verified by running the Initial Precision and Recovery (IPR) tests required by the method before the procedure is employed routinely.

10.12.2. The grinding, homogenization, or blending procedure shall be carried out in a glove box or fume hood to prevent particles from contaminating the work environment.

10.12.3. Grinding-Certain papers and pulps, slurries, and amorphous solids can be ground in a Wiley mill or heavy duty meat grinder. In some cases, reducing the temperature of the sample to freezing or to dry ice or liquid nitrogen temperatures can aid in the grinding process. Grind the sample aliquots from Section 10.10.7 or 10.11.4 in a clean grinder. Do not allow the sample temperature to exceed 50^{0}C. Grind the blank and reference matrix aliquots using a clean grinder.

10.12.4. Homogenization or blending-Particles that are not ground effectively , or particles greater than 1 mm in size after grinding, can often be reduced in size by high speed homogenization or blending. Homogenize and/or blend the particles or filter from Section 10.10.7 or 10.11.4 for the sample, blank, and OPR aliquots.

10.12.5. Extract the aliquots using the Soxhlet extraction procedure in Section 11.5.

10.13. Fish and Other Tissues-Prior to processing tissue samples, the laboratory must determine the exact tissue to be analyzed. Common requests for analysis of fish tissue include whole fish-skin removed, edible fish fillets (filleted in the field or in the laboratory), specific organs, and other portions. Once the appropriate tissue has been determined, the sample must be

other portions. Once the appropriate tissue has been determined, the sample must be homogenized.

10.13.1. Homogenization

10.13.1.1. Samples are homogenized while still frozen, where practical. If the laboratory must dissect the whole fish to obtain the appropriate tissue for analysis, the unused tissues may be rapidly refrozen and store in a clean glass jar for subsequent use.

10.13.1.2. Each analysis requires 10 g of tissue (wet weight). Therefore, the laboratory should homogenize at least 20 g of tissue to allow for re-extraction of a second aliquot of the same homogenized sample, if re-analysis is required. When whole fish analysis is necessary, the entire fish is homogenized.

10.13.1.3. Homogenize the sample in a tissue homogenizer or grind in meat grinder. Cut tissue too large to feed into the grinder into smaller pieces. To assure homogeneity, grind three times.

10.13.1.4. Transfer approximately 10 g (wet weight) of homogenized tissue to a clean, tared, 400 to 500 mL beaker. For the alternate HCL digestion/extraction, transfer the tissue to a clean, tared 500 to 600 mL wide-mouth bottle. Record the weight to the nearest 10 mg.

10.13.1.5. Transfer the remaining homogenized tissue to a clean jar with a fluoropolymer-lined lid. Seal the jar and store the tissue at < -10^{0}C. Return any tissue that was not homogenized to its original container and store at < -10^{0}C.

10.13.2. QC aliquots

10.13.2.1. Prepare a method blank by adding approximately 10 g of the oily liquid reference (Section 7.7.4) to a 400-500 mL beaker. For the alternate HCL digestion/extraction, add the reference matrix to a 500-600 mL wide-mouth bottle. Record the weight to the nearest 10 mg.

10.13.2.2. Prepare a precision and recovery aliquot by adding approximately 10 g of the oily liquid reference matrix (Section 7.7.4) to a separate 400-500 mL beaker or wide-mouth bottle, depending on the extraction procedure to be use. Record the weight to the nearest 10 mg. If the initial precision and recovery tests is to be performed, use four aliquots; if the ongoing precision and recovery tests is to be performed, use a single aliquot.

10.13.3. Spiking

10.13.3.1. Add 40 uL of the Method 8290 Matrix Spiking Solution (Section 7.4.5) into the sample, blank and OPR aliquots.

10.13.4. Extract the aliquots using the procedures in Section 11.7.

11.0 EXTRACTION AND CONCENTRATION OF SAMPLES

11.1. Separatory funnel extraction of filtrates and of aqueous samples visibly absent particles. Allow the sample to come to an ambient temperature before beginning the extraction process. Mark the level of sample on the exterior of the sample bottle/container for later determination of the sample volume.

11.1.1. Rinse separatory funnels with methylene chloride, toluene, and another rinse with methylene chloride.

11.1.2. A one liter graduated cylinder, a 100 mL graduated cylinder, and 500-mL round bottom flask are rinsed with the same solvents.

11.1.3. Transfer a well-shaken one liter sample into the rinsed 2-liter separatory funnel. Rinse the sample container twice with 15 mL of methylene chloride, and add the rinsates to the separatory funnel.

11.1.4. Add 40 uL of the Internal Standard Solution (7.5.1).

11.1.5. Pour one liter of reagent free organic water to a separatory funnel and designate as the Method Blank (13.11).

11.1.6. Pour one liter of organic free water into a separatory funnel and designate as the Laboratory Spike (Sections 13.9 and 13.14).

11.1.6.1. Add the LS to the sample for dioxins analysis.

11.1.7. Add 60 mL of methylene chloride to each separatory funnel and shake for approximately two minutes with periodic venting to relieve pressure.

11.1.8. Allow the separatory funnel to set for at least ten minutes.

11.1.9. Filter the sample into a 500 mL round bottom flask through a funnel with a glass filter filled two-thirds with sodium sulfate.

11.1.10. Repeat the extraction procedures in Sections 11.1.7, 11.1.8, and 11.1.9 two more times for each sample, the method blank, and the LS.

11.1.11. Drain each separatory funnel, and rinse the inside of each funnel with two 20-mL aliquots of methylene chloride. Add the rinsates to each corresponding 500-ml round bottom flask containing the extracts.

11.2. Roto-Vap Procedure

11.2.1. Each extract from Section 11.1 is carried through a roto-vap solvent exchange procedure into hexane.

11.2.2. Add 30 ml of hexane to the 500-mL round bottom flask containing the sample and attach the flask to the Buchi Rotavapor R-114 (Section 6.19.1).

11.2.3. Assemble the rotary evaporator according to the manufacturer's instructions, and warm the water bath to 45^{0}C. Before use, pre-clean the rotary evaporator by concentrating 100 mL of clean extraction solvent through the system. Archive both the concentrated solvent and the solvent in the catch flask for a contamination check if necessary.

11.2.4. Between samples, three 2-3 mL aliquots of solvent should be rinsed down the feed tube into a waste beaker.

11.2.5. Reduce the sample extract volume to approximately 2 to 3 mL and transfer to a 40 mL VOA vial. Bring to a final volume of 10 mL with hexane.

11.2.6. Repeat the procedures in Section 11.2.1 through 11.2.6 for the Method Blank and the LS.

11.2.7. Add 40 uL of the cleanup standard/alternate standard (7.5.3) to each sample aliquot. After this addition, aliquot 5 mL to a test tube for acid/base clean-up.

11.3. Acid/Base Clean-up.

11.3.1. Add approximately 5 mL of concentrated sulfuric acid (Section 7.1.2) to the sample contained in the labeled test tube in Section 11.2.7 and agitate.

11.3.2. Bubble the sample through the acid layer by means of a nine-inch glass pipet with bulb.

11.3.3. Allow the layers to separate. The use of a centrifuge is allowed.

11.3.4. Remove the acid (bottom) layer.

11.3.5. Repeat the procedures in Section 11.3.1 through 11.3.3 until the acid layer remains clear.

11.3.6. Add 5 mL of 5% Sodium Chloride, NaCl, (Section 7.1.4) and bubble the sample through, and then remove the sodium chloride layer.

11.3.7. Add 5 mL of potassium hydroxide, KOH, (Section 7.1.1). Bubble the sample through, and then remove the KOH layer. Make sure not to leave the sample on the KOH layer for too long, in order to prevent degradation of the sample.

11.3.8. Repeat the Sodium chloride wash in Section 11.3.6.

11.3.9. Add sodium sulfate (Section 7.2.1) to dry the sample. Add until the sodium sulfate is free flowing.

11.3.10. Repeat the above procedure for the Method Blank and the LCS.

11.3.11. The dried sample and quality control aliquots (Method Blank and LCS) are then ready for

11.3.11. The dried sample and quality control aliquots (Method Blank and LCS) are then ready for carbon column clean-up.

11.4. Carbon Column Clean-up of Extracted Samples

11.4.1. Submit the dried extract (Section 11.3.11) for further column clean-up. See Table 4 for the column conditions and collection of cleaned extract.

11.4.2. As the sample is injected into the column the "waste loop" is placed into the test tube and the "Sample Collect" is placed into a previously cleaned 250 mL Erlenmeyer flask.

11.4.3. Roto-vap solvent exchange the Dioxins/Furans using the Buchi Rotavapor R-114 (Section 6.19.1) into hexane, then reduced to approximately 2- 3 mL, and transferred to a concentrator tube.

11.4.4. Add 10 uL of the Recovery Standard Solution (Section 7.4.3) and 50 uL of nonane.

11.4.5. The samples are further reduced with nonane to a final volume of 50 uL and transferred to a 1.5 mL labeled autosampler vial with a liner.

11.5. Soil/Sediment Extraction

11.5.1. After the percent dry weight is determined in Section 10.7, aliquot 10 g of the sample based on its dry weight into a cleaned and dry 250-mL beaker.

11.5.2. Add 10 g of sodium sulfate (Section 7.2.1) to the beaker and mix with a clean and dry stainless steel spatula. This is done to absorb any moisture in the sample. Additional sodium sulfate may be used until the sample has no clumps and appears free-flowing.

11.5.3. Add 100 g of pre-extracted play sand (Section 7.7.2) to the sample, stirring until the sample has no clumps and appears free-flowing.

11.5.4. In a pre-extracted thimble, place 5 g of pre-extracted silica gel. Place the play sand (Section 7.5.2) containing the sample and sodium sulfate on top of the silica gel. Be careful not to disturb the silica gel layer.

11.5.5. The thimble is then placed into a Soxhlet Dean/Stark apparatus (Section 6.10).

11.5.6. The soxhlet is attached to a 500 mL flat bottom flask with approximately 300-250 mL toluene.

11.5.7. Spike the sample with 40 uL of the 100 ng/ml internal standard working solution (Section 7.5.1) and 40 uL of the 100 ng/mL surrogate standard working solution (Section 7.5.2).

11.5.7.1. This results in a 4.0 ng/total spike addition.

11.5.8. Add 2- 25 mL of toluene to the soxhlet, set the reflux rate to five times per hour, and extract

for eighteen hours.

11.5.9. After the eighteen hour extraction, the thimble is allowed to drain into the soxhlet.

11.5.10. The soxhlet is then drained into the flat bottom flask, with a rinse of toluene.

11.5.11. The extraction flask is then filled with 300-350 mL methylene chloride. Twenty to 25 mL of methylene chloride is added to the thimble in the soxhlet.

11.5.12. The sample is then extracted with methylene chloride for approximately eighteen hours.

11.5.13. The toluene and methylene chloride fractions are then combined by rotary evaporation and reduced.

11.5.14. The sample in the flat bottom flask is then transferred to a 500 mL round bottom flask through a funnel fitted with a filter two-thirds filled with sodium sulfate (Section 7.2.1).

11.5.15. The sample in the 500 mL round bottom flask is solvent exchanged into hexane using the Buchi Rotavapor R-114 (Section 6.19.1) and bring the sample to a final volume of 5 mL with hexane.

11.5.16. Place the extract into a 16 x 25 mm test tube (Section 6.22).

11.5.17. Add 40 ul of the 100ng/mL Alternate Standard Solution (Section 7.5.3).

11.5.17.1. This results in a 4.0 ng/total spike addition.

11.5.18. The sample is now ready for the clean-up procedure.

11.6. Soil/Sediment clean-up procedure.

11.6.1. The clean-up procedure for soil/sediment samples is the same as the clean procedure for aqueous samples discussed in Section 11.3 (Acid/Base Clean-up) and Section 11.4 (Column Clean-Up).

11.6.2. See Table 4 for the Fractionization Cleanup Procedure.

11.7. Extraction of Tissue Samples by Soxhlet Extraction.

11.7.1. Add 30-40 g of powdered anhydrous sulfate (Section 7.2.1) to each of the beakers (Section 10.13.1.2) and mix thoroughly. Cover the beakers with aluminum foil and allow to equalibrate for 12-24 hours. Remix prior to extraction to prevent clumping.

11.7.2. Assemble and pre-extract the Soxhlet apparatus per Sections 6.10.1 through 6.10.6. except use the methylene chloride; hexane (1:1) mixture for the pre-extraction and rinsing and omit the quartz sand. The Dean-Stark moisture trap may also be omitted, if desired.

11.7.3. Reassemble the pre-extracted Soxhlet apparatus and add a fresh charge of methylene chloride; hexane to the reflux flask.

11.7.4. Transfer the sample/sodium sulfate mixture (Section 11.7.1) to the Soxhlet thimble, and install the thimble in the Soxhlet apparatus.

11.7.5. Rinse the beaker with several portions of solvent mixture and add to the thimble. Fill the thimble/receiver with solvent. Extract for 18-24 hours.

11.7.6. After extraction, cool and disassemble the apparatus.

11.7.7. Quantitatively transfer the extract to the Buchi Rotavapor-114 macro-concentration device (Section 6.19.1) and concentrate to dryness. Set aside the concentration apparatus for re-use.

11.7.8. Complete the removal of the solvent using the nitrogen blowdown apparatus (Section 6.20), and a water bath temperature of 60^0C. Weigh the receiver, record the weight, and return the receiver to the blowdown apparatus, concentrating the residue until a constant weight is obtained.

11.7.9. Percent lipid determination- The lipid content is determined by extraction of tissue with the same solvent system (methylene chloride: hexane) that was used in EPA's National Dioxin Study so that lipid contents are consistent with that study.

11.7.9.1. Re-dissolve the residue in the receiver in hexane and spike with 1.0 mL of the cleanup standard (Section 7.5.3) into the solution.

11.7.9.2. Transfer the residue/hexane to the anthropogenic isolation column (Section 11.8.1) or bottle for the acidified silica gel batch cleanup (Section 11.8.2.), retaining the boiling chips in the concentration apparatus. Use several rinses to assure that all material is transferred. If necessary, sonicate or heat the receiver slightly to assure that all material is re-dissolved. Allow the receiver to dry. Weigh the receiver and boiling chips.

11.7.9.3. Calculate the lipid content to the nearest three significant figures as follows:

$$\text{Percent lipid} = \frac{\text{weight of residue (g)}}{\text{weight of tissue (g)}} \times 100$$

11.7.9.4. It is not necessary to determine the lipid content of the blank, IPR, or OPR aliquots.

11.7.10. HCl digestion/extraction and concentration

11.7.10.1. Add 200 mL of 6 N HCl and 200 mL of methylene chloride: hexane (1:1) to the sample, method blank, and Lab Spike.

11.7.10.2. Cap and shake each bottle one to three times. Loosen the cap in a hood to vent excess pressure. Shake each bottle for 10-30 seconds and vent.

11.7.10.3. Tightly cap and place on shaker. Adjust the shaker action and speed so that the acid, solvent, and tissue are in constant motion. However, take care to avoid such violent action that the bottle may be dislodged from the shaker. Shake for 12-24 hours.

11.7.10.4. After digestion, remove the bottles from the shaker. Allow the bottles to stand so that the solvent and acid layers separate.

11.7.10.5. Decant the solvent through a glass funnel with glass-fiber filter (Sections 6.12.2. through 6.12.3.) containing approximately 10 g of granular anhydrous sodium sulfate (Section 7.2.1) into a macro-concentration apparatus (Section 6.19.1). Rinse the contents of the bottle with two 25 mL portions of hexane and pour through the sodium sulfate into the apparatus.

11.7.10.6. Concentrate the solvent to near dryness by macro-concentration using the Roto-Vap procedure (Section 11.2).

11.7.10.7. Complete the removal of the solvent using the nitrogen blowdown apparatus (Section 6.20) an d a water bath temperature of 60 degrees C. Weigh the receiver, record the weight, and return the receiver to the blowdown apparatus, concentrating the residue to until a constant weight is obtained.

11.7.10.8. Percent lipid determination-The lipid content is determined in the same solvent system {(methylene chloride: hexane (1:1)} that was used in the EPA's National Dioxin Study so that the lipid contents are consistent with that study.

11.7.10.8.1. Re-dissolve the residue in the receiver in hexane and spike 1.0 mL of the alternate recovery standard (Section 7.5.3) into the solution.

11.7.10.8.2. Transfer the residue/hexane to the narrow-mouth 100-200 mL bottle retaining the boiling chips in the receiver. Use several rinses to assure that all material is transferred, to a maximum hexane volume of approximately 70 mL. Allow the receiver to dry, weigh the receiver and boiling chips.

11.7.10.8.3. Calculate the percent lipid per Section 11.7.9.3. It is not necessary to determine the lipid content of the blank, IPR, and OPR aliquots.

11.8. Clean-up of Tissue Lipids Extracts-Lipids are removed from the Soxhlet extract using either the anthropogenic isolation column (Section 11.8.1) or acidified silica gel (Section 11.8.2), or removed from the HCl digested extract using sulfuric acid and base back-extraction (Section 11.8.3).

11.8.1. Anthropogenic isolation column-Used for removal of lipids from the Soxhlet/SDS extraction (Section 11.7).

11.8.1.1. Prepare the column as given in Section 7.6.4.

11.8.1.2. Pre-elute the column with 100 mL of hexane. Drain the hexane layer to the top of the

column, but do not expose the sodium sulfate.

11.8.1.3. Load the sample and rinses onto the column by draining each portion to the top of the bed. Elute the CDDs/CDFs from the column into the apparatus used for concentration (Section 11.2) using 200 mL of hexane.

11.8.1.4. Concentrate the cleanup extract (Section 11.7) to constant weight. If more than 500 mg of material remains, repeat the cleanup using a fresh anthropogenic isolation column.

11.8.1.5. Re-dissolve the extract in a solvent suitable for the additional cleanups to be used.

11.8.1.6. Add 40 uL of the Alternate Recovery Standard Spiking Solution (Section 7.5.3.1) into the residue/solvent.

11.8.1.7. Additional cleanups of either Florisil (Section 11.9) or Carbon (Section 11.4) are recommended as minimum additional cleanup steps.

11.8.1.8. Following cleanup, concentrate the extract to 10 uL.

11.8.2. Acidified silica gel-Procedure alternate to the anthropogenic isolation column (Section 7.6.4) that is used for removal of lipids from the Soxhlet extraction (Section 11.7).

11.8.2.1. Adjust the volume of hexane in the bottle to approximately 200 mL.

11.8.2.2. Add 40 uL of the Alternate Recovery Standard Spiking Solution (Section 7.5.3.1) into the residue/solvent.

11.8.2.3. Drop the stirring bar into the bottle, place the bottle on the stirring plate, and begin stirring.

11.8.2.4. Add 30-100 g of acid silica gel (Section 7.6.1.2) to the bottle while stirring, keeping the silica gel in motion. Stir for two to three hours.

11.8.2.5. After stirring, pour the extract through approximately 10 g of granular anhydrous sodium sulfate (Section 7.2.1) contained in a funnel with glass-fiber filter into a macro concentration device (Section 11.2). Rinse the bottle and sodium sulfate with hexane to complete the transfer.

11.8.2.6. Concentrate the extract per Sections 11.2.1 through 11.2.7 and clean up the extract using the procedures in Sections 11.3.1 through 11.3.11.

11.8.3. Sulfuric acid and base back-extraction-Used with HCl digested extracts.

11.8.3.1. Add 10 mL of concentrated sulfuric acid to the bottle. Immediately cap and shake one to three times. Loosen cap in a hood to vent excess pressure. Cap and shake the bottle so that the residue/solvent is exposed to the acid for a total time of approximately 45 seconds.

11.8.3.2. Decant the hexane into a 250 mL separatory funnel making sure that no acid is transferred. Complete the quantitative transfer with several hexane rinses.

11.8.3.3. Back extract the solvent/residue with 50 mL of potassium hydroxide solution followed by two organic free reagent water rinses.

11.8.3.4. Drain the extract through a filter funnel containing approximately 10 g of anhydrous sodium sulfate in a glass fiber filter into the Roto-Vap macro concentration device (Section 6.19.1).

11.8.3.5. Concentrate the cleaned up extract to a volume suitable for the additional cleanups given in Sections 7.4.

11.8.3.6. Following cleanup, concentrate the extract to 10 uL.

11.9. Florisil Cleanup

11.9.1. Pre-elute the activated Florisil column (Section 7.6.5) with 10 mL of methylene chloride followed by 10 mL of hexane: ethylene chloride (98:2 v/ v) and discard the solvents.

11.9.2. When the solvent is within 1 mm of the packing, apply the sample extract) in hexane to the column, Rinse the sample container twice with 1 mL portions of hexane and apply to the column.

11.9.3. Elute the interfering compounds with 20 mL of hexane: ethylene chloride (98:2) and discard the eluate.

11.9.4. Elute the CDDs/CDFs with 36 mL of methylene chloride and collect the eluate. Concentrate the eluate. Concentrate the eluate via macro concentration for further cleanup.

12.0 EXTRACTION AND CONCENTRATION PROCEDURES FOR ASH SAMPLES

12.1. Weigh out 10 g of sample to the second decimal point and place sample into the extraction bottle.

12.2. Add 150 mL of 1M HCl to the sample. Cap the extraction bottle tightly, and shake with the Ann Arbor Shaker Table (6.11.3) for three hours @ room temperature.

12.3. Rinse a glass fiber filter with toluene, and filter the sample through the filter, placed on a Buchner funnel, into a 1 L flask.

12.4. Rinse the filter cake with 500 mL of organic free reagent water, dry the filter cake at room temperature overnight in a dessicator.

12.5. Scrap the filter cake into a clean beaker and set aside for later use.

12.6. To the sample in the beaker, add 10 g of anhydrous sodium sulfate (Section 7.2.1), mix thoroughly, cover the beaker and let sit for approximately one hour.

12.7. Mix again, and let sit for approximately one hour.

12.8. Place the filter paper from Section 12.5 and the sample (mixed with sodium sulfate) into an extraction thimble.

12.9. Place the extraction thimble into the Soxhlet attached to a 500 mL flat bottom flask filled with 300-350 mL of toluene.

12.10. Add 40 uL of the Internal Standard Working Solution (Section 7.5.1).

12.11. Extract the sample for 16-18 hours.

12.12. After extraction, suspend the thimble to drain the toluene.

12.13. Remove the Soxhlet, dispose of the thimble, and filter toluene through a glass funnel filled two-thirds full with anhydrous sodium sulfate (Section 7.2.1) into a 500 mL round bottom flask.

12.14. Roto-vap the solvent exchange into hexane.

12.15. Reduce to approximately 2-3 mL, transfer to a 40 mL VOA vial, and bring to a final volume of 10 mL with hexane.

12.16. Add 40 uL of the Alternate Recovery Standard Spiking Solution (Section 7.5.3.1).

12.17. The extract is now ready for the Acid/Base Cleanup procedure in Section 11.3.

12.18. After the Acid/Base cleanup procedure is performed, the extract is ready for the Carbon Column Cleanup in Section 11.4.

12.19. Roto-vap solvent exchange into hexane. Reduce to approximately 2-3 mL and transfer to a concentrator tube.

12.19.1. Add 10 uL of the Alternate Recovery Standard Solution (Section 7.5.3) and 50 uL of nonane (7.3.4).

12.19.2. Reduce to a final volume of 50 uL nonane, and place sample in a 2-mL autosampler vial with liner.

13.0 DEFINITIONS AND ACRONYMS

13.1. Analyte-A CDD or CDF tested for this method.

13.2. CDD-Chlorinated Dibenzo-*p*-ioxin-The isomers and congeners of tetra-through octa

chlordibenzo-*p*-dioxin.

13.3. CDF-Chlorinated Dibenzofuran-The isomers and congeners of tetra-through chlorodibenzofuran.

13.4. Field Blank-An aliquot of reagent water or other reference matriz that is placed in a sample container in the laboratory or the field, and treated as a sample in all respects, including exposure to sampling site conditions, storage, preservation, and all analytical procedures. The purpose of this field blank is to determine if the field or sample transporting procedures and environments.

13.5. GC-Gas chromatograph or gas chromatography.

13.6. HRGC- High Resolution GC.

13.7. HRMS-High Resolution MS.

13.8. Laboratory Control Sample (LCS) - see ongoing precision and recovery standard (OPR).

13.9. Laboratory Reagent Blank-See method blank.

13.10. May- This action, activity, or procedural step is neither required nor prohibited.

13.11. Method Blank- An aliquot of reagent water that is treated exactly like as a sample including exposure to glassware, equipment, solvents, reagents, internal standards, and surrogates that are used with samples. The method blank is used to determine if analytes or interferences are present in the laboratory environment, the reagents, or the apparatus.

13.12. OPR-Ongoing precision and recovery standard (OPR); a laboratory blank spiked with known quantities of analytes. The OPR is analyzed exactly like a sample. Its purpose is to assure that the results produced by the laboratory remain within the limits specified in this method for precision and recovery.

13.13. PAR –Precision and recovery standard; secondary standard that is diluted and spiked to form the IPR and OPR.

13.14. Preparation Blank-See method blank.

13.15. Organic Free Reagent Water- Water demonstrated to be free from the analytes of interest and potentially interfering substances at the method detection limit for the analyte(s) of interest.

13.16. SDS-Soxhlet/Dean Stark extractor; an extractor device applied to the extraction of solid and semi-solid materials.

13.17. Should-This action, activity, or procedural step is suggested but not required.

13.18. Stock Solution-A solution containing an analyte that is prepared using a reference material traceable to EPA, the National Institute of Science and Technology (NIST), or a source that will attest to the purity and authenticity of the reference material.

13.19. TCDD-Tetrachlorodibenzo-*p*-dioxin.

13.20. TCDF-Tetrachlorodibenzofuran.

14.0 POLLUTION PREVENTION AND WASTE MANAGEMENT

14.1. All appropriate pollution prevention procedures and waste management procedures as described in the DAT Waste Management Plan must be utilized by all personnel involved in the preparation of the samples.

15.0 REFERENCES

15.1. Polychlorinated Dibenzodioxins (PCDDs) and Polychlorinated Dibenzofurans (PCDFs) by High-Resolution Gas Chromatography/High Resolution Mass Spectrometry (HRGC/HRMS), EPA Method 8290, Revision 1, January 1998.

15.2. DAT Quality Assurance Manual, Revision 4.2, September 2005.

15.3. DAT Waste Management Plan, September 2001.

TABLE 1:
COMPOSITION OF THE SAMPLE FORTIFICATION AND RECOVERY STANDARD SOLUTIONS[a]

Analyte	Sample Fortification Solution Concentration (pg/μL)	Recovery Standard Solution Concentration (pg/μL)
$^{13}C_{12}$-2,3,7,8-TCDD	10	--
$^{13}C_{12}$-2,3,7,8-TCDF	10	--
$^{13}C_{12}$-1,2,3,4-TCDD	--	500
$^{13}C_{12}$-1,2,3,7,8-PeCDD	10	--
$^{13}C_{12}$-1,2,3,7,8-PeCDF	10	--
$^{13}C_{12}$-1,2,3,6,7,8-HxCDD	10	--
$^{13}C_{12}$-1,2,3,4,7,8-HxCDF	10	--
$^{13}C_{12}$-1,2,3,7,8,9-HxCDD	--	500
$^{13}C_{12}$-1,2,3,4,6,7,8-HpCDD	10	--
$^{13}C_{12}$-1,2,3,4,6,7,8-HpCDF	10	--
$^{13}C_{12}$-OCDD	20	--

[a] These solutions should be made freshly every day in nonane or other appropriate solvent because of the possibility of adsorptive losses to glassware. If these solutions are to be kept for more than one day, then the sample fortification solution concentrations should be increased ten fold, and the recovery standard solution concentrations should be doubled. Corresponding adjustments of the spiking volumes must then be made.

TABLE 4
FRACTIONIZATION CLEANUP

Equivalents:

L - load- load position
I - inject position
L-I - switch from load to inject
F - forward flow
R - reverse flow

Solvent system:
1-Hexane
2- 1:1 Cyclohexane: Methylene Chloride
3- 75:20:5 Methylene Chloride : Methanol: Toluene
4- Toluene

Column packing: PX-21/Silica 5.5% w/w

Conditioning the column

Step	Injection valve	Flow direction	Valve Solvent system	Valve Run time minutes
1.	L	F	2	4:00
2.	I	F	1	4:00

Sample cleanup

Step	Injection valve	Flow direction	Valve Solvent system	Valve Run time minutes
3.	L-I	F	1	7:00 collect loop waste
4.	L-I	F	1	5:00
5.	1	F	2	5:00
6.	L	F	3	3:00
7.	L	R	4	10:00 collect Sample

Repeat steps 1 and 2 and inject next sample.

8. Solvent exchange cleaned extract to hexane using an 80 mL pear flask bring to a nominal 2.0 -3.0 mL. Place into a blown concentrator tube and add recovery standard and 50 uL Nonane.

9. Bring to a final volume of 50 uL nonane.

QUALITY ASSURANCE MANUAL
QAM
Revision 4.3

for

Data/Analysis Technologies, Inc.
7715 Corporate Boulevard
Plain City, Ohio 43064
614-873-0710

President/Laboratory Director:

Ronald K Mitchum, Ph.D. 5/17/07

Signature Date

Quality Assurance Officer:

Deborah K. Johnson 5/17/07

Signature Date

This document is a part of and is to be used in conjunction with the Quality System Documents as set forth by this company. This document is applicable to all areas of the laboratory associated with the procurement, processing and storage of analytical data and as such, is to be made available to, understood by, and implemented by all laboratory personnel. This document along with the remainder of the quality systems documents shall be available for onsite audit or data audit to accrediting authorities.

Table of Contents

Page Number

I. INTRODUCTION 4
- A. Objectives and Commitments 4
- B. Quality Assurance Goals 4
- C. Quality Assurance Project Plan (QAPP) 5
- D. Good Laboratory Practices 5

II. QUALITY ASSURANCE IN PERSONNEL 7
- A. Organization 7
- B. Training 7
- C. Quality Assurance Responsibilities 8

III. QUALITY ASSURANCE IN FACILITIES AND EQUIPMENT 12
- A. Control Systems 12
- B. Major Laboratory Equipment 13
- C. Support Equipment Measurement Traceability 13
- D. Reference Material 14
- E. Computers 14

IV. QUALITY ASSURANCE FOR PROCUREMENT AND PREPARATION 16
- A. New Work 16
- B. Sample Receipt 16
- C. Sample Log In 17
- D. Sample Storage 17
- E. Internal Chain of Custody 18
- F. Sample Archive 18
- G. Methodologies 18
- H. Timeliness 19
- I. Confidentiality and Property Rights 19

V. QUALITY ASSURANCE FOR ANALYSIS 20
- A. Standard Traceability 20
- B. Instrumentation and Measurements 21
- C. Analytical Quality Control 22
- D. Air Testing Quality Control 23
- E. Analytical Quality Control Failure 23

F. **Monitoring of Analytical Activity** 24
G. **Manually Generated Data** 25

VI. QUALITY ASSURANCE FOR REPORTING RESULTS 26
A. **Report Writing** 26
B. **Data Qualifiers** 26
C. **Documentation** 27
D. **Electronic or Electromagnetic Transfer of Test Results** 27
E. **Client Complaints** 28

VI. QUALITY ASSURANCE IN TEST METHODS AND SOPS 29
A. **SOPs** 29
B. **General Procedure for Test Methods** 29
C. **Approved and Appropriate Test Methods** 30
D. **New methods** 31

VII. QUALITY ASSURANCE IN HOUSEKEEPING AND SAFETY 32
A. **Housekeeping** 32
C. **Waste Management** 32
D. **Safety** 33

Appendix Listing

A. PRODUCT SCHEDULE 34
B. EQUIPMENT LISTING 37
C. FACILITIES AND FLOOR PLAN 39
D. ORGANIZATIONAL CHART 41
E. RECRUITMENT POLICY 42
F. AUTHORIZED SIGNATURES 43
G. LISTING OF CONTROLLED LABORATORY NOTEBOOKS 44
H. QUALIFICATION SUMMARY OF KEY PERSONNEL 45
I. GLOSSARY OF TERMS 58

I. INTRODUCTION

A. Objectives and Commitments

The quality assurance program at Data/Analysis Technologies, Inc. (DAT) is designed to continuously improve the quality of the products through effective organizing, planning and execution of protocols. The involvement of employees in a total quality program, a commitment from management, and an ongoing quality improvement program insure the achievement of the organization's Quality Assurance Program Objectives.

The laboratory's Quality Assurance Objective shall be met by assuring that:

- The laboratory shall establish and maintain a Quality Assurance Program. A Quality Assurance Officer shall be appointed, who will report directly to the President of the company.
- Annual Quality Assurance Program reviews shall be undertaken to assess the program's effectiveness.
- Annual audits of procedures and processes against standard operating procedures shall be performed. Daily review of data must meet requirements.
- Training in the implementation of the Quality Assurance Program shall be implemented and maintained.
- The laboratory will participate in proficiency testing studies as least semiannually and as needed for cases where results are not traceable to national standards of measurement.

B. Quality Assurance Goals

Measurable Quality Assurance goals are necessary to ensure the laboratory has a performance based program. The QA indicators, vide supra, for each project are measurable quantities. Communication of the laboratory performance against the QA plan to the staff during the annual QA Review, shall assist to establish a strong program. It is the performance objective that each project meet the goals set forth in this document. If this cannot be accomplished, the laboratory shall provide full disclosure in the case narrative and results shall be flagged.

C. Quality Assurance Project Plan (QAPP)

Quality Assurance Project Plans (QAPPs) are documents that precisely define the way a project, a group of allied projects, or a specific analytical program are to be conducted. It is within the QAPP that Data Quality Objectives (DQOs), and the means by which they are to be met are stated in detail. The general content and format required of a QAPP is specified in Interim Guidelines and Specifications for Preparing Quality Assurance Project Plans (USEPA, December 1980).

D. Good Laboratory Practices

Good Laboratory Practices shall be followed by the staff in the conduction of all aspects of a TSCA, FIFRA, RECRA or FDA study. All work done for the state of Louisiana shall adhere to the rules and regulations of LAC/NELAC. Other non-regulated studies are to adhere to the intent of GLP in an effort to provide a level of continuity. This includes master schedule maintenance, final report review, phase inspections, protocol maintenance (SOPs), reports to management and certification statements.

1. Master schedule maintenance:
   The master schedule is a current record of all projects. The master schedule is updated daily. Documentation is indexed under test substance (the matrix in which TSCA, FIFRA or FDA regulations for analyte content are applied) and contains the following information for each project:

   - the test system (analytical method)
   - the nature of the project
   - the date the project was initiated
   - the current status of the project
   - the identity of the sponsor (client)
   - the name of the project director

2. Final report review:
   Each final report must be reviewed by the QAO to assure that all protocols (methods and SOPs) were adequately described and followed, and raw data is accurately reflected in the reported data. The review shall be documented by the QAO signature and such documentation will be filed in the project folder.

3. Phase inspections:
Phase inspection records must be maintained within the QAU. Each record must show the date of inspection, the study (project) inspected, the phase of the project inspected, the inspector identity, findings and problems, corrective actions recommended and implemented, and a schedule for re-inspection of the project. A copy of the record must be kept in the associated project file.

4. Protocol maintenance:
The QAO must maintain copies of all protocols (SOPs, analytical methods, QAPPs, etc.) which are utilized in GLP or LAC/NELAC studies. These copies must clearly indicate the time period during which the protocol was in force.

5. Reports to management:
The QAO must submit periodic written status reports to management and study directors, noting problems and corrective action taken on GLP or LAC/NELAC studies. These reports shall be issued as necessary but at least annually.

6. Deviations from approved protocol:
The QAO must determine that proper authorization and documentation exists when any deviations from approved protocol occurred in GLP or LAC/NELAC studies.

7. QA Statement:
The QAO must prepare and sign a statement of GLP or LAC/NELAC compliance to be included with the final study report which presents dates and phases inspected and dates of reports to management. In case of noncompliance, the QA statement details any deviations/modifications to the protocols/SOPs with an evaluation of their impact on data quality. A copy of the report must be kept in the project file.

II. QUALITY ASSURANCE IN PERSONNEL

A. Organization

The Quality Assurance Officer reports directly to the office of the President. Personnel are responsible for implementing the Quality Systems Documents into their specific part of the organization. Group leaders are responsible to the President. Duties and responsibilities are proportioned so that adequate supervision is ensured for all areas of the testing procedures. See appendix D for DAT's organizational chart.

It is the laboratory's policy to ensure its personnel are free from any commercial, financial, and other undue pressures, which might adversely affect the quality of the work.

B. Training

1. On Site training:

Training in the form of meetings, workshops, formal and on the job training shall be documented and placed in the laboratory training file. Performance of new protocols (SOPs) shall require documented training by the supervisor, prior to an analyst performing the protocol independently. All personnel shall be required to demonstrate initial and ongoing proficiency in the activities for which they are responsible. The amount of training depends upon the task and is at the discretion of the supervisor. Training goes on at different levels throughout the laboratory. On the job training relating directly to the position is done by the supervisor or other qualified staff. Cross training, supervisory and other related training takes place on a scheduled basis and is documented for training files.

Training records shall be available for inspection by authorized accrediting agencies and shall include the following:

- Evidence that the employee has read, understands and is using the latest version of the lab's in-house quality documentation.
- Training courses or workshops on specific equipment, analytical techniques, or lab procedures.
- Documentation certifying that the employee has read, understands and agrees to use the latest version of a test method used.
- Documentation of acceptable performance of a blind sample.

2. Off Site training:

This type of training takes place as needed. Recommendations and suggestions come from all levels of staff and are documented and updated regularly in the training files.

C. Quality Assurance Responsibilities

1. Management:

The management staff at the laboratory shall implement the following to assure the Quality Assurance Program will meet the objectives stated therein.

- It is the responsibility of management to assure that all personnel are qualified for the positions being held and are trained in the duties they are supposed to carry out. All personnel shall be trained in the Quality Systems documents.
- The laboratory shall establish and maintain a Quality Assurance Program. A Quality Assurance Officer shall be appointed, who will report directly to the President of the company.
- Annual Quality Assurance Program reviews shall be undertaken to assess the program's effectiveness.
- Annual audits of procedures and processes against standard operating procedures shall be performed.
- Nominate deputies as per SOP 126, in the event that laboratory personnel are absent or cannot fulfill their duties.

2. Laboratory Director

The Laboratory Director is responsible for implementing the quality assurance plan, adherence to LAC/NELAC regulations and review and initiation of laboratory standard operating procedures. Also, the Laboratory Director shall be responsible for the following duties:

- scheduling,
- technical oversight,
- performance of routine laboratory functions,
- laboratory equipment routine maintenance,
- supplies and the overall responsibility for the technical operation of the laboratory,

- hazardous waste disposal.

3. Quality Assurance Officer:

The Quality Assurance Officer functions independently from laboratory operations and performs assessments without outside influences. Training in QA/QC procedures is documented in the training files. The Quality Assurance Officer's duties shall include:

- Maintaining current quality control documentation, including, but not limited to, the SOPs and QAM.
- Review and revise as needed and approve the quality system documents. The QAO is required to sign all approved documents.
- Implementing routine phase inspections, review final reports, review QAPP (Quality Assurance Program Plans) for the QA indicators, accuracy, precision, completeness, representativeness, comparability, and provide training on quality assurance procedures.
- Providing to management the annual assessment of the Quality Assurance Program at the laboratory. This report to the President shall critique the program, its goals, its function and implementation at the laboratory level.

4. Office Manager

The office manager's or his/her appointed deputy's responsibilities shall include the following quality assurance duties:

- Record Maintenance

  Resumes: Resumes are put in a uniform format upon hire. These resumes are updated on an annual basis or as needed.
  Training: Training files are kept in the administrative office, and all new and ongoing training information is turned in monthly and the records updated at that time.

  Education and Experience: This information is updated with the resumes.

- Document Control

  Logbooks are maintained using a sign out system recorded in a designated logbook. Logbooks are used until filled and then returned to

the archive area. The logbook must have documented on the front inside cover the assigned owner, the date issued, and the name and subject of the logbook. Logbooks must be maintained by initialing and dating every entry and striking all blank areas of the logbook. When completed the log books are dated, retired and archived. See appendix G for a list of the controlled laboratory notebooks.

The laboratory maintains records for projects of all original observations, calculations and final test results on either hard copy or magnetic media. These data are archived in accordance with LAC/NELAC. The archive is locked at all times. All authorized personnel access the archive in the presence of the archivist and sign in. Any materials removed or added to the archive must be signed out by both. Project files are kept for a minimum of 2 years for the hardcopy and an additional 8 years on CD-ROM.

5. Client Representative:

The quality assurance duties of the client representative or his/her deputy shall include:

- Quality control check on all sample log-in activities. The client representative shall contact the client if any of the samples do not meet DAT's sample acceptance criteria. (See section IVB and SOP 17).
- Master Schedule maintenance.
- Client contact documentation. The client representative shall document all client contact associated with a project. Such documentation must be placed in the permanent project file.

6. Personnel:

All personnel are bound by DAT's employee *Code of Conduct* and are subject to the consequences of not abiding by the code. The code of conduct and noncompliance corrective measures are detailed in the DAT employee handbook, Appendix A.

- It is the responsibility of all personnel to read, understand and abide by the DAT *Code of Conduct*. Any illegal or improper actions will be reviewed on a case by case basis as per the DAT employee handbook.
- It is the responsibility of all personnel involved in project work to understand and implement the methods, SOPs and quality control criteria associated with a project.

- It is the responsibility of all laboratory personnel to understand and abide by SOP # 159, Standard Operating Procedure for Manual Integration.

III. QUALITY ASSURANCE IN FACILITIES AND EQUIPMENT

A. Control Systems

Data/Analysis Technologies, Inc. provides a secure environment for our clients samples, employees and guests. (See appendix C for a complete floor plan.) Our standard procedures require that all doors remain locked at all times except the main entrance, which is open during regular business hours. Once access is gained there are secondary punch lock mechanisms providing authorized entrance into the laboratory. The lock combination is changed semiannually.

1. Laboratory Access

Access to the analytical laboratory is normally restricted to employees. Exceptions shall be made in the case of tours of the laboratory by prospective clients and clients who have a need to be present when their samples are analyzed. Visitors are to sign the Visitor Log and to be accompanied by a DAT employee at all times. The following rules are applied regarding punch lock entrances:

- New punch lock combinations are obtained from an employee's supervisor or the receptionist at the beginning of each month.
- Combinations are to be given only to active employees of Data/Analysis Technologies, Inc.
- Laboratory personnel are trained to protect the lock code in the presence of visitors.

2. Security

Security is maintained by a key inventory system and an electronic alarm system, which provides active access to only those individuals actively employed at Data/Analysis Technologies, Inc. A security check is performed nightly by supervisory personnel to ensure all entrances are secure. Locks on laboratory entrances, files and coolers ensure client confidentiality and personal safety. A punch lock system allowing selected entry into the laboratory and archive is in place.

An electronic monitored fire alarm system provides early warning in case of a fire.

B. Major Laboratory Equipment

Well-maintained equipment is an essential ingredient in assuring the quality, completeness and timeliness of analytical data. DAT minimizes the risk of data incompleteness through the performance of regular maintenance on all equipment, redundancy in equipment, provision of an ample stock of spare parts, and an inventory of specialized test equipment to support rapid repair, in the event unscheduled maintenance is required. The instrument laboratory is equipped with a UPS system which provides uninterruptible power to all the equipment.

The laboratory furnishes all equipment required for the correct performance of test methods. No equipment used for test methods is outside the permanent control of the laboratory.

All equipment is inspected and cleaned according to manufacturer's instructions. Manufacturer's instructions are kept in the area of each piece of equipment. Each piece of equipment has a maintenance log book which contains the following information:

a. name of the piece of equipment
b. manufacturer's name and serial number of the piece of equipment
c. details of maintenance carried out to date
d. history of any damage, modification or repair

Defective or damaged equipment that is considered to be repairable is taken out of service and repaired as quickly as possible. Any time a piece of equipment is repaired, it is the responsibility of the analyst to run a calibration, verification or test to show that the repaired equipment performs satisfactorily. The raw data records are retained to document the performance of the equipment. Calibrations and projects analyzed prior to the repair of a piece of equipment are examined for inaccuracies.

Equipment that is found to be defective or damaged beyond repair is removed from the laboratory and placed in storage in the warehouse until proper disposal takes place. The equipment is labeled with an "Out Of Service" tag.

C. Support Equipment Measurement Traceability

Balances are calibrated annually by an outside firm. Thermometers of concern are NIST traceable. Certificates of traceability to the national standards of measurement are maintained on file.

Prior to each working day, balances and refrigerators are checked with NIST traceable references and documented. Results should be within the range as specified for our application. If the calibration cannot be maintained within acceptable limits, the equipment is to be removed from service until such time as it can be repaired, or a deviation curve is prepared and all measurements are corrected.

Any monitoring of additional measurement devices that are prescribed by specific test methods shall be carried out as per the method. The acceptability for use is to be according to the needs of the analysis or application.

Mechanical volumetric devices are to be checked for accuracy on a quarterly basis.

All necessary correction factors must be documented, calculated and recorded.

A complete listing of the laboratory's instruments and equipment is detailed in appendix B.

D. Reference Material

The laboratory maintains an adequate supply of reference materials needed to perform test methods. Reference materials are available to all personnel. In addition to reference material in-house, office computers are on-line to access references on the internet.

E. Computers

Although this laboratory does not employ an automated LIM system at this time, the EPA document "2185-Good Automated Laboratory Practices" Sections 8.1 through 8.11 is adopted where applicable for computer use in the laboratory. All requirements for LAC 33:I and NELAC must be met for the capture, processing, manipulation, recording, reporting, storage or retrieval of test data when computers or automated equipment is used.

No new computer software may be used to generate results until it has been documented as adequate for use. This documentation may take the form of an acceptable pt result, demonstration of capability using four laboratory spiked samples, or analysis of a sample of known quantitation for a specific analyte.

All data obtained by computers is to be manually reviewed by the analyst at the time of analysis. Only analysts trained in the use of the computer/instrument system have the authority to initiate the analysis and review the results.

Computers used for the collection, storage and processing of data are maintained in a secure area. All computers are connected to surge protectors. Computers and instruments used for the capture of data are connected to an uninterruptible power supply. Analysts are required to back up their data on a weekly basis. Backup tapes or other media are kept in a fireproof safe in a locked area. Where software is accessible, access is controlled by the use of a code.

IV. QUALITY ASSURANCE FOR PROCUREMENT AND PREPARATION

All laboratory activity and operational activities shall be documented. This documentation may take the form of manually entered data (in ink), electronic data, telephone logs, and/or shipping receipts. All manually entered information must be entered into a bound notebook, sequentially numbered and dated.

A. New Work

All projects accepted at the laboratory are at the discretion of the laboratory director. It is the responsibility of the laboratory director to insure that the facility and resources are available for all new work. All aspects of a project shall be handled at DAT, with DAT equipment, by DAT personnel. No work shall leave DAT's premises unless authorized by the laboratory director for subcontracting. All subcontractor's must be certified by the appropriate regulatory agency.

B. Sample Receipt

1. Sample package acceptance

Samples shall only be accepted for log-in if they are properly packaged and documented. Sample packages shall be inspected for breakage and leaking, unusual odors and rough handling. All packages must be received through an approved carrier unless previous arrangements have been made for hand delivered samples. Packages shall not be accepted for log-in if there is no client identification on the package.

The Sample Custodian or designated assistant shall receive all deliveries. The general condition of the package and the time/date and temperature of receipt shall be recorded. Any documentation external to the package shall be examined for consistency. In the case of samples delivered by a customer, the name of the person making the delivery shall also be recorded. The package shall be taken to the sample receiving area for examination by the Sample Custodian.

2. Sample Receipt Report

A fully completed "Sample Receipt Report" is to be prepared for all samples submitted for analysis. Any receipt problems shall be documented on this report. Problem resolutions will be documented on the final report.

C. Sample Log In

1. All new projects accepted for work must be logged into the DAT record system in accordance with DAT SOP 17. It is the responsibility of the sample custodian to assure that all sample acceptance criteria are verified and that the samples are logged into the sample tracking system in accordance with the document DAT SOP 17. It is the responsibility of the sample custodian to confirm correct preservation for non-volatile samples.

2. In all cases, where there is any doubt as to the samples' suitability for testing or if the sample does not conform to the description provided or the test methods are not clear, the study director is to contact the client for further instructions before proceeding.

D. Sample Storage

The Sample Custodian is responsible for the storage of samples and the distribution of the samples to the analysts.

To avoid deterioration, samples are to be stored in an appropriate, secured area. Samples requiring refrigeration shall be stored in a refrigerator, those requiring freezing, in a freezer, and all others in a cabinet. Access to samples brought inside the punch locked doors and stored inside a freezer, refrigerator, or cabinet shall therefore require the opening of the punch lock.

Temperature monitoring and corrective actions

- Temperature of all the refrigerators and freezers shall be taken daily and recorded in a Refrigerator and Freezer Temperature Logbook.
- Refrigerator temperature must be kept at 4($\pm$2)°C.
- Freezer temperature must be kept at -10°C to -25°C.
- A thermometer must be placed in every refrigerator and cooler. Refrigerator and freezer thermometers must be immersed in liquid.
- The thermostat shall be adjusted if the measured temperature is outside the acceptable range.
- Outside service shall be called if thermostat adjustment is not successful. If the samples must be removed from the refrigerators during the repairs, they shall be stored in a cooler at 4°C $\pm$ 2°C. The corrective action taken shall be entered into the Temperature Logbook under Corrective Action Taken.

E. Internal Chain of Custody

Internal chain of custody forms are not used at DAT. All laboratory areas are within proximity of each other with the whole area secure behind locked doors. The samples remain within the laboratory area at all times.

F. Sample Archive

Only the Sample Custodian or his designated assistant shall archive samples. Samples to be archived must meet the following:

- Analysis completed.
- Data pack sent to client.
- Acceptance of data by client.
- In case of fish or milk, client is called and asked if samples are to be returned. With client approval, they shall be disposed.
- Samples shall be placed in storage in an upright position.

G. Methodologies

Only laboratory approved methods shall be used in the projects. These methodologies are available to all staff. Personnel are to follow all SOPs associated with the testing. A list of approved methods is included in Appendix A.

1. Deviations

   All deviations from the approved methods can only be authorized by the laboratory director. All approved deviations shall be documented and a method validation package shall be submitted. This validation package shall include:

   a. origin of method
   b. deviations from standard
   c. reason for deviations
   d. effects of deviations
   e. comparison with the department approved methods.

2. In unique cases, a published and recognized test method may not exist. A research and development project shall be initiated by the laboratory director. All developed test methods must adhere to strict quality control protocol.

3. Only analytical methods from recognized sources (EPA/ASTM/standard methods, etc) may be used on projects from Louisiana. Modifications to these reference methods must be approved by LAC/NELAC prior to their use on a regular and/or reoccurring basis.

H. Timeliness

1. All extraction and analysis holding times shall be strictly enforced as per the method. If the method does not specify a holding time, samples for organic analysis are subject to a seven day extraction/fourteen day analysis holding time unless otherwise directed by the laboratory director. Samples for inorganic analysis are subject to a 30 day preparation/40 day analysis holding time.

2. All results shall be reported to the client in the agreed upon turnaround time, usually fourteen or twenty-one days.

I. Confidentiality and Property Rights

To insure the confidentiality and property rights of all clients, handling, tracking and storage of all samples in any accepted project shall be done in accordance with this manual.

V. QUALITY ASSURANCE FOR ANALYSIS

A. Standard Traceability

1. Only laboratory approved standards shall be used in analyses. All standards received shall be issued a laboratory identification number. Standards used for analysis shall be documented in the analysts' or extractors' notebooks on a case by case system.

2. Upon arrival, standards shall be entered into the Pure Standard Log Book. The following information shall be documented.

   a. Name of standard
   b. Date opened
   c. Date of receipt
   d. Refrigerator bin number
   e. Expiration Date
   f. Lot Number
   g. Manufacturer
   h. Amount received.

3. Original Certificates of Analysis of all standards used in the laboratory shall be archived and maintained by the Quality Assurance Officer.

4. Prepared standards shall be documented in a numbered Standard Log Notebook. An entry into the Standard Log Notebook shall contain the following information:

   a. Name of analyte
   b. Standard Log's unique identification number
   c. Date of preparation
   d. Preparer's initials
   e. Complete information on the pure standard being used including the name and lot number of the standard.
   f. Final concentration of prepared standard.
   g. Solvent in which the standard was prepared.

5. The Standard Log number along with the analyte name, concentration of prepared standard and expiration date must be clearly noted on the prepared standard's label.

6. All expired standards shall be tagged with a red dot sticker. Expired standards cannot be used for any project work.

B. Instrumentation and Measurements

1. All instruments and measuring equipment shall be properly maintained as per the manufacturer's instructions. All measuring equipment, instrumentation and climate controlled facilities shall be monitored on a regular basis.

2. All instrumentation shall be calibrated prior to the analysis of each project as per the method requirements. Calibrations shall be derived from only laboratory approved standards as stated in Section VA of this document. Calibration verification or continuing calibrations shall be run on a regular basis as per the method requirements.

3. All projects shall include an instrument application sheet to be fully completed by the analyst. In addition all generated data, analytical notebooks and run logs shall include the laboratory ID code, date of analysis, instrument identification, analysis type, calculations and analysts initials.

4. The analyst shall utilize a test method that provides a detection limit that is appropriate and relevant for the intended use of the data. Detection limits must be determined for each method and reevaluated every time there is a change or deviation of the method, or at a minimum on an annual basis. Detection limits shall be determined by the either of the following methods.

   a. The standard deviation with a student T confidence level of 99% of seven repetitions of a calibrated blank for inorganic analytes or seven repetitions of the lowest calibrator for organic analytes.
   b. The peak height ratio of the lowest calibrator to signal noise.

   Method "a" is the preferred method and shall be used for all analyses performed for a regulatory client. Method "b" shall only be used for orphan analytes or for where it is the only way to determine the MDL such as in dioxins.

5. All raw data shall be manually reviewed for qualitative and quantitative correctness. All data shall be compared against the data from a reference

material either by internal or external calibration. Projects shall pass QC criteria as specified by the method for that analysis.

C. Analytical Quality Control

1. Each project shall be accompanied by the quality control parameters as set forth by the required method or SOP. Each project shall include, but not be limited to, comparison to a standard, a method blank and a laboratory spike, unless the sample media such as summa canisters precludes such analyses. In the case of trace metals, additional quality control criteria must be utilized as per DAT SOP 100.

    a. *Method Blanks*: Shall be performed at a frequency of one per batch of samples per matrix type.
    b. *Laboratory Control Sample and Laboratory Control Duplicates*: Shall be analyzed at a minimum of one per preparation batch of 20 or less samples per matrix spike.
    c. *Matrix Spikes and Matrix Spike Duplicates*: Shall be performed at a frequency of one out of every 20 samples per matrix type prepared over time.
    d. *Surrogates*: Must be added to all samples, standards, and blanks, for all organic chromatography methods except when the matrix precludes its use or when a surrogate is not available.
    e. *Duplicate Spikes*: Shall be analyzed at a minimum of 1 in 20 samples per matrix type per sample extraction or preparation method.

2. Each project shall be accompanied by a copy of the fully completed sample preparation form ("extraction sheet"). Each extraction sheet shall contain the following information:

    a. DAT Project Number
    b. Method of preparation
    c. Date of preparation
    d. Initials of the chemist
    e. Initials of the spike witness(es).
    f. Solvents and reagents used, including lot numbers
    g. Sample weights and volumes, extract volumes and final volumes.

3. All quality control measures shall be assessed semiannually. Once a sufficiently large enough database is obtained, the acceptance limits for matrix and spike recoveries shall be based on three times the standard

deviation of the population of the last six months, with a 99% student T confidence level. Statistically derived data is reevaluated and updated semiannually.

D. Air Testing Quality Control

Air testing quality control criteria differ from the criteria for other matrices. Quality control criteria for air testing analytical methods can be found in DAT's SOP 123.

E. Analytical Quality Control Failure

All quality control sample results shall be subjected to meeting the criteria as set forth by the method or SOP. If no criteria exists, the following criteria shall be enforced:

1. Calibration Failures.

   a. *Initial Calibration*: Initial calibration curves must have r2 value of 0.99 or an %RSD of not more than 30%. The standard curve must be reextracted if necessary and reanalyzed. If the curve is still not within range after reanalysis, the laboratory director is to be notified.
   b. *Continuing Calibration Verifications*: The calibration verification must be reanalyzed. If after reanalysis the verification is still not within limits, a new standard curve must be made and reanalyzed. Under no circumstances shall samples be analyzed without an acceptable calibration curve or verification.
   c. *End Calibrations*: As specified in the method or SOP.

2. Blank Contamination:

   a. *Instrument Contamination:* Rinse instrument parts through blank injections until no analyte of interest is present. If the contamination is present at a level lower than the lowest calibrator after a repeat instrument cleaning, proceed with the analysis and flag the data. Exceptions may be common laboratory contaminants such as methylene chloride, acetone or 2-butanone for volatile analyses and phthalates for semivolatile analyses.
   b. *Method Blank Contamination:* Method blank contamination is evaluated on a case by case basis. Causes for any method blank contamination must be determined.

- Generally, the method blank and the associated sample set must be reextracted and reanalyzed. If contamination still occurs, the data must be flagged and the QA officer or laboratory director must be notified.
- Air samples cannot be reextracted and reanalyzed. Data must be flagged.
- See SOP 100 for trace metals blank criteria.

3. Accuracy Failure:

   a. *Laboratory Control Spikes:* Recoveries must be within the required limits as statistically determined by the QA Officer. Generally, values less than three sigma of the standard deviation of the spike results from the last six months constitute a warning, values more than three sigma of the standard deviation require reextraction and reanalysis. Any exceptions to this criteria require approval from the laboratory director.
   b. *Matrix Spikes:* Matrix spike recoveries are evaluated on a case by case basis. Recovery values greater than three sigma of the standard deviation of the spike results from the last six months must be flagged. The analysis must be reviewed by the laboratory director or QA officer to determine the cause of the failure. Generally, samples are not required to be reextracted due to matrix spike recovery problems.

4. Precision Failure:

   a. *Spike Duplicates*: The relative percent difference must be below the required criteria as determined by the QA Officer. Relative percent differences greater than 20% must be flagged for review by the laboratory director or QA officer.

In all cases, any nonconformances must be itemized on the analysis corrective action form and results reported under a failed quality control parameter must be flagged and discussed in detail in the project narrative. All client contact initiated to resolve nonconforming issues must be documented and placed in the final project file.

F. Monitoring of Analytical Activity

1. In order to ensure the quality of test results, the following analytical checks shall be implemented.

   a. *Internal quality control procedures*: Surrogate, laboratory spike and internal standard recoveries shall be monitored using statistical techniques.
   b. *Participation in PT or other interlaboratory comparisions*. PT testing shall be done at no less than twice per year, at six month intervals.
   c. *Secondary reference materials*: Where appropriate a second source standard shall be used to verify calibrations and or test results.
   d. *Replicate testing*: Replicate testing shall be performed on a sample from each analytical batch where applicable.

2. All analytical check samples shall be handled (i.e., managed, analyzed and reported) in the same manner as real environmental samples utilizing the same staff, methods as used for routine analysis of that analyte, procedures, equipment, facilities, and frequency of analysis.

G. Manually Generated Data

1. All data not generated by an automated system shall be legibly recorded directly into the analyst's notebook in permanent ink.

2. No entry into a notebook shall be obliterated by erasing, overwriting files, or blacking out.

3. Corrections to record-keeping errors are made by a one-line mark through the error in such a manner that the original data can still be read. The individual making the change is to initial and date the change. Individuals making corrections to analytical records must provide a justification or explanation of why the changes were made if the reasons are not obvious.

VI. QUALITY ASSURANCE FOR REPORTING RESULTS

A. Report Writing

1. Analytical results shall be reported to the client in a format in accordance with DAT SOP 29.

2. To reduce or eliminate transcription and calculation errors, all reports shall be reviewed by a second report writer before submission to the client. Unless otherwise arranged, the review shall include:

   a. recalculation of at least ten percent of the sample results,
   b. recheck of all the quality control data,
   c. spelling, grammar and accuracy check of the narrative,
   d. check for missing or inaccurate documentation

3. All test results reported under the LELAP/NELAP certification shall meet all the requirements of LAC 33:1. If this criteria cannot be met, the report must provide reasons and/or justifications in support of the results.

B. Data Qualifiers

The following flags shall be used as appropriate to qualify data.

B	Analyte detected in the associated method/instrument blank. (For results not blank corrected.)
D	Value from a dilution.
DO	Compound diluted out.
Dup	Duplicate.
C	Value from a concentration.
E	Value above highest calibrator and results are estimated. Can only be used for results that cannot be diluted in air testing methodology. Results shall be flagged as estimated when they are greater than the highest calibration standard.
I	Interference. No usable result.
IDL	Instrument detection limit. Used in trace metals and mercury analysis.
J	Value below lowest calibrator, value is estimated. Results shall be flagged as estimated when they are below the lowest calibration standard but greater than the reporting limit.

ND, U, < Not detected at the detection limit shown.

C. Documentation

All results must be fully documented. The degree of documentation submitted to the client shall depend on the contract and shall be in accordance with DAT SOP 29. In addition to the COC and Log-In sheet already in the project folder, the analyst shall submit the following original materials to the report writer for inclusion with the project:

1. Fully completed application sheet.
2. Standard curves with %RSD or r^2 values.
3. Tune data where appropriate.
4. All continuing calibration and instrument blank data.
5. Fully completed extraction sheet.
6. Fully completed dry weight forms if necessary.
7. Injection logs where available.
8. All sample and QC raw data.
9. Copy of the Standard Log page of the standards used.
10. Any miscellaneous notes, graphs, forms, charts, or written material pertaining to the project.
11. Copies of notebook pages documenting any approved method or analytical deviations.
12. All procedures for data reduction, such as the use of linear regression, applicable equations and calculations must be documented.

D. Electronic or Electromagnetic Transfer of Test Results

1. At the client's request, DAT will report results by telephone, facsimile, or computer. Results may be electronically or electromagnetically reported only after they become part of an approved and completed data package.

    a. Only the laboratory director, or the client representative (and their deputies) have the authority to approve and transfer test results electronically or electromagnetically.

    b. All electronic and electromagnetic transfer of data shall be in accordance with the requirements set forth by LAC 33:I and NELAP.

2. All electronic or electromagnetic transfer of test results must be immediately followed by the submittal of the data package as hard copy.

E. Client Complaints

1. Client contact is handled by the laboratory director or the client services representative. All client concerns shall be fully documented in the telephone/fax log and shall include:

   a. client company and name of contact at the company
   b. date of complaint
   c. project reference
   d. details of complaint or concern.

2. Client concerns shall be acted upon within 24 hours, with a call back to the client within 2 business days of the original complaint.

3. Subsequent actions to complaints and resolved issues shall be recorded in the project file. This may take the form of a fax or telephone log to the client.

4. Unresolved issues shall be forwarded to the president for review.

5. Any areas of activity and responsibility that may raise doubt as to the laboratory's compliance with policies or procedures shall be promptly audited.

VII. QUALITY ASSURANCE IN TEST METHODS AND SOPS

A. SOPs

1. The laboratory maintains SOPs for all test methods. A copy of the SOPs are placed in each laboratory and are available and accessible to all personnel. Each SOP clearly indicates the effective date for the SOP, the revision number and the signature of the laboratory director. All SOPs are controlled documents.

2. New SOP's

   The need for new SOPs can be determined when a new method is implemented, when the scope of the existing method is extended or when some activities are being performed without adequate SOPs. Such a need can be identified by the analyst involved in the production, someone from management, or the quality assurance officer can identify the need and request new SOPs, usually as a follow-up corrective action of the internal audit. SOPs are created to provide a clear, concise step-by-step description of the procedure with explanatory information to enable a person with the appropriate background to perform the procedure.

3. Revisions to Existing SOPs

   Revisions are made to SOPs at any given time to reflect changes in procedures.

4. Responsibility and Approval

   The employee is responsible for implementing or modifying SOPs. Management is responsible for approving SOPs. The QAO should be provided with an information copy. Each new SOP or revision to existing SOPs must receive approval by the author's and the revisor's supervisor.

B. General Procedure for Test Methods

1. Before use, all laboratory instructions, standards, manuals and reference data relevant to the work being done must be updated on a regular basis. Updates must be signed, dated and approved by the laboratory director and quality assurance officer.

2. Approved methods are kept in the file cabinet in the client representative's office. Methods are filed in numerical or alphabetical order, and are accessible to all personnel. Any modifications or clarifications made to the method must be signed and dated and approved by the laboratory director and quality assurance officer. A copy of the modified method along with the original shall be maintained in the method file folder.

C. Approved and Appropriate Test Methods

1. Only complete and approved methods may be referenced for analytical tests and related activities such as sample preparation and handling. A complete method shall include or reference the following where applicable:

- Identification of the test method
- Applicable matrices
- Detection limit
- Scope and application
- Summary of the test method
- Definitions
- Interferences
- Safety
- Equipment and supplies
- Reagents and standards
- Sample collection, preservation, shipment and storage
- Quality control
- Calibrations and standardizations
- Procedure
- Calculations
- Method performance
- Pollution prevention
- Data assessment and acceptance criteria for quality control measures
- Corrective actions for out-of-control data
- Contingencies for handling out-of-control or unacceptable data
- Waste management
- References and
- Any tables, diagrams, flowcharts and validation data.

2. The consideration of an appropriate test method should include:

   a. accuracy requirement of the client
   b. specific test methods requested by the client

c. is the method fully documented and validated and available to the client

D. New methods

1. Before use in projects, any new method must be proven to be capable of delivering the desired results. A new method study must contain:

   a. results from an approved standard
   b. preparation and analysis of the matrix of the samples to be tested by this method.
   c. replicate testing
   d. approval of the laboratory director.

2. Any personnel performing a method for the first time must show proficiency in the method, before performing the method on a project. Proof of proficiency shall be in the training file after approved results are achieved by the staff member.

3. If there is a change in instrument type for an approved method, the analyst must show that the new instrument is capable of performing the method as required. A test project must be prepared and analyzed before samples can be run.

VIII. QUALITY ASSURANCE IN HOUSEKEEPING AND SAFETY

A. Housekeeping

Laboratory personnel shall maintain clean and clutter free facilities at all times. Laboratory personnel must:

- Work in the areas designated for the specific type of analysis required.
- Clean all labware according to the test method or SOP.
- Replace laboratory paper not less than once per week.
- Include a method blank with each analysis.

B. Procurement and storage of supplies

1. Laboratory supplies, chemicals and standards are obtained by completely filling out a Requisition/Purchase Order Form and giving the form to the Requisitions Officer.

2. Supplies are obtained from nationally recognized laboratory vendors. Chemicals and standards are obtained only from vendors providing a quality assurance certificate. Wherever possible, equipment and consumable materials shall not be used until they have been inspected, calibrated or otherwise verified as complying with any standard specifications relevant to the calibrations or tests concerned.

3. Laboratory personnel are to take inventory weekly of consumable materials. Consumable materials include but are not limited to solvents, standards, tape, disposable glassware and plasticware. At least a week's worth of materials should be maintained in the laboratory.

4. All chemical supplies shall be stored in the appropriate cabinets in accordance with DAT's Chemical Hygiene Plan and safety documents.

5. Expiration dates of all chemical supplies must be noted. If the container does not indicate an expiration date, an expiration date of 1 year is assumed.

C. Waste Management

DAT is a conditionally exempt small quantity generator of RCRA wastes. DAT produces several listed wastes including, D001, F001, F002, F003, F005 and

D002. DAT's waste management plan is kept on file at the laboratory and complies with all LAC/NELAC regulations.

D. Safety

All personnel undertake orientation and on-the-job intensive training concerning safety issues. DAT policy in this respect is presented in detail in the following documents, with which each employee is provided:

- DAT Safety and Health Manual
- DAT Hazard Communication Plan
- DAT Chemical Hygiene Plan
- DAT Emergency Contingency Plan

APPENDIX A

PRODUCT SCHEDULE

DAT Method	Analyte	Matrix
EPA Methods		
608	Organochlorine pesticides and PCB's	Liquid/Solid
* 1613	Dioxins/Furans in water	Liquid
1668	PCBs	All
* 6010B	Inorganic Metals	Liquid/Solid
* 3810	Headspace for VOCs	Liquid
* 7470/7471	Cold Vapor Mercury	Liquid/Solid
8010	Halogenated VOCs (GC/HSD)	Liquid/Solid
8011	DBE and DBCP by GC-ECD	Liquid/Solid
* 8015	Non halogenated VOCs (GC/FID)	Liquid/Solid
8020	Aromatic VOCs (GC/PID)	Liquid/Solid
* 8021	Halogenated VOCs (GC/PID/ECD)	Liquid/Solid
8030/8031	Acrolein, acrylonitrile, acetonitrile (GC/FID)	Liquid/Solid
8040/8041	Phenolic compounds (GC/FID)	Liquid/Solid
8080	Organochlorine pest. and PCB's (GC/ECD/HSD)	Liquid/Solid
8081	DBCP	Liquid/Solid
8082	HR Pesticides/PCBs	Liquid/Solid
8090	Nitroaromatic cmpds and cyclic ketones (GC)	Liquid/Solid
8100	PNAs by GC-FID	All
* 8260	Volatile organics by GC/MS	Liquid/Solid
8280	Dioxins Low Resolution for Land Ban	All
* 8290	Dioxins HRMS	All
* 8270	Semivolatile organics by GC/MS	Liquid/Solid
8140/8141	Organo-phosphorus pesticides	Liquid/Solid
8150/8151	Chlorinated herbicides	Liquid/Solid
* 8310	PAHs (HPLC/Fluorescence)	Ground water/Waste
* 8315	Aldehydes and Ketones	Water/Soil/Air
8316	Acrylamide, acrylonitrile and acrolein by HPLC	Water/Soil
8318	N-Methylcarbamates by HPLC	Water/Soil
* 8330	Nitroaromatics and nitramine explosives (HPLC)	Water/Soil/Grass/Tissue
8330M	Explosives plus NG and PETN(HPLC)	All
8332	Nitroglycerin by HPLC	Water/Soil/Grass/Tissue
9010B	Cyanide distillation	Liquid/Solid
9014	Hydrogen cyanide	Water/Soil
* 9056	Inorganic anions by Ion Chromatography	Water/Soil/Tissue
9034	Hydrogen sulfide	Water (titrimetric)
SW-8105/604	Major Anions	Assorted

DAT Method	Analyte	Matrix
Air Methods for Ambient and Stack		
* Method 23	PCDD/PCDF	Filter/XAD
* Method 26	Anions by IC;CL;F;Br;I	Acid Catch
* Method 29	Multi-metals	Multiple fractions
Method 9057	Chloride from HCL/CL2 train	Train
Cations	Cations by IC; inorganic or organic	DI water/other
Anions	Anions by IC; Method 9056	DI water/other
* Method 0011/0011A	Aldehydes and ketones	Air/100 mL DNPH Imps
* CARB 429	Polyaromatic hydrocarbons	Air
CARB 430	Aldehydes	Air/DNPH
NCASI	Formaldehyde(colorimetric)	Air/chilled water
EPA 308	Formaldehyde(colorimetric)	chilled water
CARB 426	Hydrogen cyanide	Impin catch(.1 N NaOH)
EPA 6	Sulfur dioxide	Impinger catch
EPA 7D	Nitrogen oxides (IC)	Impinger catch
EPA Draft	Phosgene(GC/MS)	Imp catch(toluene/DEA)
OSHA 61	Phosgene (GC)	Adsorb. (XAD-2/2-HMP)
OSHA 50	Ethylene oxide	Adsorbent (HBR coated)
OSHA PV 2005	Acrylic Acid	Air
EPA 8	Sulfur dioxide	Impinger catch
EPA Draft	Ammonia	.1 N H2SO
NIOSH 6015	Ammonia	Acid Silica gel
SW-5041 VOST	List	Tennax/Tennax charcoal
TO-1	List	Tennax/Tennax charcoal
TO-2	VOCs by GC/MS	Carbon Molecular Seive
TO-3	VOCs by GC-FID/ECD	Trap
* TO 4A	Organochlorine pesticides and PCB's	Air/Puf Cartridge
* TO 5	Aldehydes and ketones	Air/10 mL DNPH Soln
TO 6	Phosgene	Air/10 mL Aniline/toluene
TO-7	N-Nitrosodimethylamine	Adsorption tube
TO 8	Phenol and methyl phenols	Air:NaOH impinger catch
* TO-10A	Organochlorine pesticides	PUF
TO-9A	Dioxins/Furans	Air
TO 11A	Formaldehyde	Air/DNPH Silica Gel
TO 13A	Polycyclic aromatic hydrocarbons	Air/XAD or Puf
* TO-14A	Ambient/source volatiles	Summa Canister
* TO-15	Ambient/source/stack	Summa Canister
* TO-17	Ambient/source/stack	Adsorbent Tubes
* Method 207A	Isocyanates	Air/Water
Method 305	Total HAPS	Process, waste
Method 308	Methanol	Air/Water
NIOSH 2000	Alcohols	Silica gel tube
NIOSH 2010	Amines	Silica gel tube
NIOSH 7904	Hydrogen cyanide(ISE)	Tennax
Method NCASI 531	Chloroform	Catch .1 N NaOH
* Method 18	VOCs	Bags/tubes/summa
* Method 18	Mercaptans and sulfides	Bags/filters/water
Method 25D, 25E	VOCs	Waste

Other Methods and Matrices

NOAA 1993	Organotin analysis/ soil/water
EPA 7903	Inorganic Acids
Anthraquinone	Black liquor/Pulp/Filters/Waste
Catechols, chlorinated phenolic compounds	Paper liquors/Waste Water
Methanol	Black liquor/Pulp/Filters/Waste
Mercaptans and sulfides	Air/Water
Nonylphenol	Water/Soil
Nonylphenol ethoxylates	Water
Glycol ethers	Water
Caprolactam	Water
Terpenes and pinenes	Water
NIOSH and OSHA Methods	Water/Soil/Plants
Triazine herbicides	Assorted
RSK 175	Headspace (methane, ethane, ethene)
Sulfonyl urea	Chemical Products

*** = LELAP/NELAP Certified**

APPENDIX B
EQUIPMENT LISTING

Chromatographic - HPLC

1. High Pressure Liquid Chromatography - Hewlett Packard model 1100
2. High Pressure Liquid Chromatograph - Hewlett Packard model 1050
3. High Pressure Liquid Chromatograph - Dionex Model 500
4. Detectors include UV, VIS, Fluor, EC, Conductivity

Chromatographic - GC

1. Hewlett Packard Model 5890 Series II; PID; ELCD, FID
2. Hewlett Packard Model 5890 Series II; ECD
3. Hewlett Packard Model 6890 GC;FPD;FID
4. Hewlett Packard Model 5890 Series II; ECD; NPD
5. Hewlett Packard ChemStation GC Data System; 3
6. Varian model 3700: FID; FPD

GC/MS

1. VG 7070-SEQ High Resolution GC/MSDS EI, CI, NCI, FAB, Flow FAB- Extended Mass Range
2. VG Quattro I- LC/MS/MS- EI,CI,API, ES, APCI, FAB, Flow FAB with GC and direct probe and extended mass range
3. Hewlett Packard 5973 GC/MS/DS with 6890 GC-Entech Concentration System
4. Finnigan 4500 GC-MS/DS-Upgraded to Hewlett Packard Model 5890 Series II gas chromatograph-Upgraded to Galaxy data system
5. 2-Hewlett Packard 5988 GC/MS/DS system with HP Model 5890 Series II and HP Chemstation NT data system upgrade.
6. Mircomass Platform LCZ with an ESI Probe Assembly.
7. Micromass Autospec Ultima M
8. Micromass Autospec Prospec

ICP and FIMS

1. Perkin Elmer Optima 2000DV ICP
2. Perkin Elmer AS90Plus Auto Sampler
3. Perkin Elmer FIMS 100 Mercury Analyzer
4. Perkin Elmer AS90 Auto Sampler

Spectrophotometric

1. Hatachi UV/Visible Spectrophotometer
2. Fluorometer LDC
3. Fluorometer Ames

Other

1. 3- Hood; 8 ft chemical resistant, 1-5 ft hood, chemical resistant
2. Hood; 5 ft laminar flow
3. Balance; Denver Instruments (0.00001 g.)
4. Balance; Denver Instruments (0.001 g.)
5. Balance Fisher model 711 (600 g.)
6. 2-Oven; Fisher
7. 3-Rotary Evaporator; Buchler; Buchii
8. 12-Soxhlet Heater; Precision
9. 2-Sonic Bath; Branson 3200
10. Centrifuge; International UV
11. Furnace; Thermolyne 1400
12. Water Bath; Precision
13. pH Meter; Orion 701 and 501
14. Calorimeter; Parr
15. Computers; 17 Various
16. Copy machine(3); Cannon 2020; Cannon 6650; Cannon 6551
17. Lab Bench; 400 linear feet
18. Rotator; Cole Palmer
19. Water Purification System; Barnstead
20. Refrigerators; 9
21. Freezer; 1
22. GPC - ABC Autoprep
23. Labconco Glove Box
24. Entech TO-14 Concentrator
25. Entech Dynamic Diluter
26. Entech Canister Cleaner
27. Entech Automatic Sampler
28. Entech Automatic Tube Sampler
29. NuTech TO-14 Concentrator
30. NuTech TO-14 Automatic Sampler

APPENDIX C
DATA ANALYSIS TECHNOLOGIES FACILITIES AND FLOOR PLAN

Data/Analysis Technologies, Inc. location, mailing address and phone numbers are:

Data/Analysis Technologies, Inc.
7715 Corporate Blvd.
Plain City, OH 43064

800-733-8644
614-873-0710
614-873-0810 (Facsimile)

Data/Analysis Technologies, Inc. occupies a total of 10,000 sq ft of space.

Data/Analysis Technologies, Inc. is a **female owned closely held S-corporation** and as such is not publicly traded.

A sketch of the floor plan is on the following page.

DATA/ANALYSIS TECHNOLOGIES, INC

FLOOR PLAN

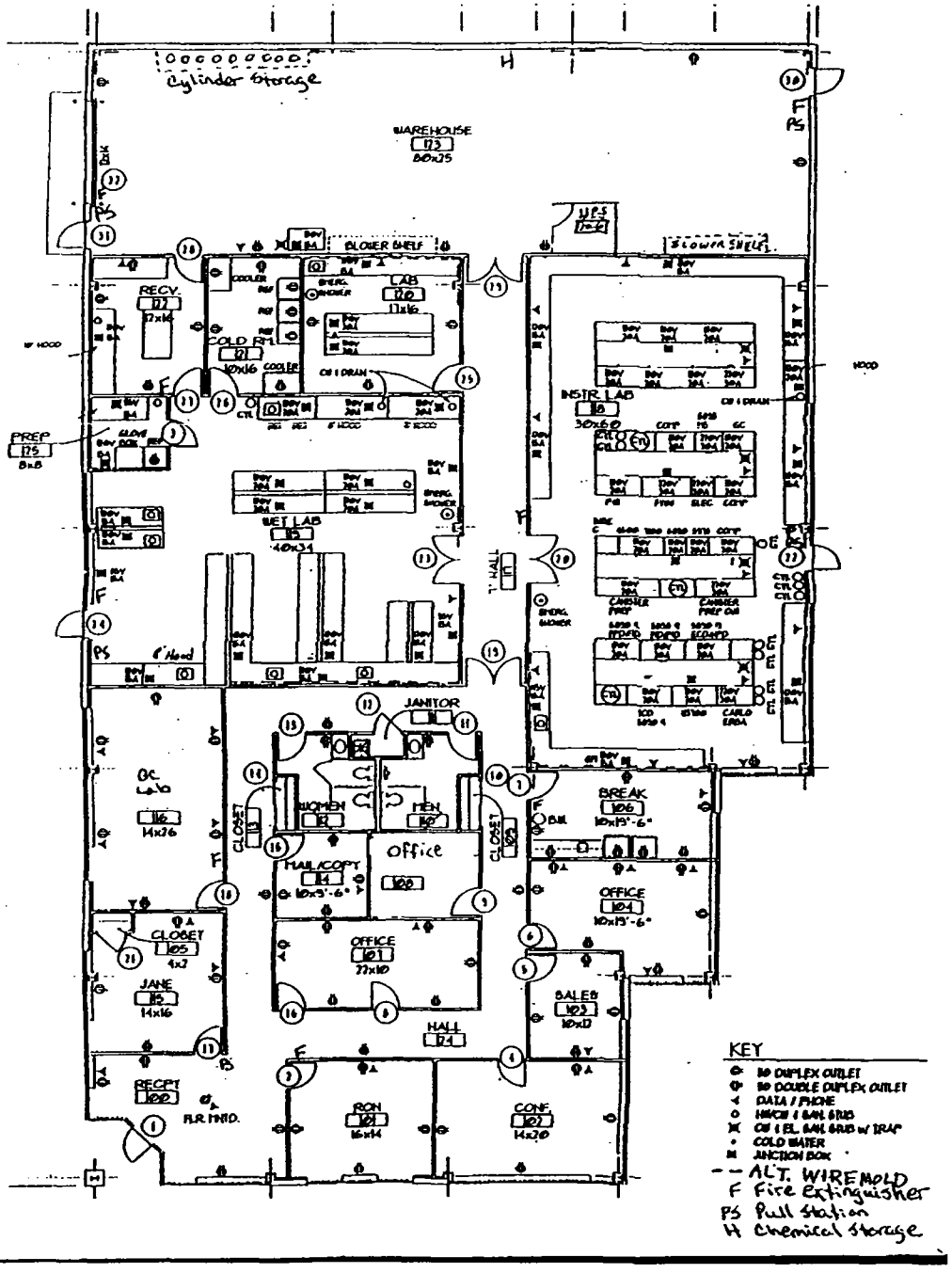
Cylinder Storage
WAREHOUSE
173
80x25
FLOWER SHELF
RECV.
LAB
COLD RM
COOLER
INSTR. LAB
PREP
WET LAB
JANITOR
WOMEN
MEN
BREAK
OFFICE
CLOSET
JANE
HALL
RECPT
RON
CONF.
SALES
KEY
ALT. WIREMOLD
F Fire Extinguisher
PS Pull Station
H Chemical Storage

APPENDIX D

Data Analysis Technologies, Inc.

ORGANIZATIONAL CHART

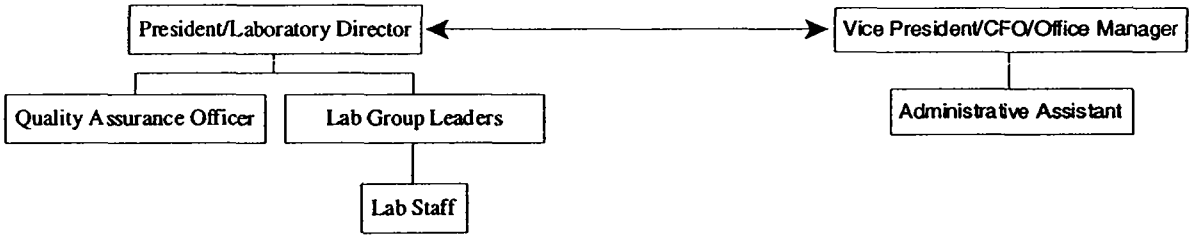

APPENDIX E

RECRUITMENT POLICY

The Personnel Department of Data Analysis Technologies, Inc. uses several methods of recruitment.

Data Analysis Technologies, Inc. first announces open positions on the posting boards so that current employees have the first opportunity to apply for openings within the facility. These announcements are made one week before outside sources for candidates are sought. The outside sources used primarily are the local newspapers, placement agencies (temporary and permanent), local colleges and the State Employment Bureau.

The recruitment process consists of collecting the applications and resumes, distributing them to the proper selecting official, setting up appointments as requested and interviewing with a representative from personnel, as well as, the appropriate staff. After the selection is made for the position, the candidates references are checked before making an offer. The experience and educational levels of newly hired staff members are confirmed via telephone interviews with previous employers and copies of the certified transcripts from the educational institution. Data Analysis Technologies, Inc. is an equal opportunity employer.

Professional qualifications for all DAT employees can be found in the position descriptions maintained by the laboratory.

APPENDIX F

AUTHORIZED SIGNATURES

DATA ANALYSIS TECHNOLOGIES, INC.

APPROVED SIGNATURE LIST MAY 2007

	DAT EMPLOYEE	APPROVED SIGNATURE	INITIAL	DATE
1	Cahill, Robert C.			05/09/07
2	Carnahan, Farrah C.	Farrah Carnahan	FCC	5-9-07
3	Ewald, Daniel W.		DE	5/09/07
4	Johnson, Deborah K.		DKJ	5/9/07
5	Kaltenbach, John J.			5/9/07
6	Mitchum, C. Scott			5/9/07
7	Mitchum, D. Jane	D. Jane Mitchum		5/11/07
8	Mitchum, Ronald K.			5/11/07
9	Morris, Steve M.			5-9-07

APPENDIX G

LISTING OF CONTROLLED LABORATORY NOTEBOOKS

The following is a list of all laboratory notebooks maintained at the Laboratory:

Area	Laboratory Notebook(s)
Sampling Receiving	Sample Receipt Logbook
Standards Control	Standards Logbook Balance Calibrations/Refrigeration
Lab/Organics	Instrument Run Logbook Maintenance Logbook
GC	Instrument Run Logbook Maintenance Logbook
Archive	Archive Logbook for addition and removal of archived data
Shipping	Sample Shipping Log
Administration	DAT - Visitor's Logbook
Personal	Phone Logs Personal Logs
Metals	Method 29 Extraction Logbook
Dioxins	DLM01.4 Extraction/Clean-up Logbook Project Sequence Logbook
SVOA & NVOA	Method 3540C Soxhlet Extraction Logboc Method 3510C Aqueous Extraction Logbc Method 0010 Extraction Logbook
CTAS	SM5540D Aqueous Extraction Logbook
Halowax	8081A Aqueous Extraction Logbook

APPENDIX H

QUALIFICATION SUMMARY OF KEY PERSONNEL

QUALIFICATIONS STATEMENT

RONALD K. MITCHUM, Ph.D.

Summary of Qualifications:

Dr. Mitchum is an internationally recognized expert in the fields of analytical chemistry and mass spectrometry of trace contaminants, EPA priority pollutants and Quality Assurance procedures. He has developed methods for RCRA, Superfund and Office of Toxic Substances, set regulatory limits for exposure while employed by the U.S. Food and Drug Administration, developed the U.S. EPA regulatory methods for analysis and was responsible for the quality of data produced by laboratories under contract to the U.S. Environmental Protection Agency. In his capacity as the Director of the Quality Assurance Division for the U.S. EPA Environmental Monitoring Systems Laboratory he directed audits of data, audits of laboratories, conducted a performance evaluation program and supplied the standard reference materials for the EPA monitoring efforts.

He was responsible for determining the quality of the data from the Love Canal Habitability Study, Denney Farms Dioxin Trial Burn, The National Dioxin Survey conducted by EPA and The Veterans Dioxin Study conducted by the Centers for Disease Control. He has developed innovative methodologies for the isolation and identification of halogenated and mixed halogenated dioxins and furans in carbonaceous and polymeric matrices. Developed regulations and reviewed industrial submissions of methods for commercial products for trace contaminants.

He has participated on international panels on environmental chemistry, organized international conferences, published over 100 research papers and presented numerous oral talks on environmental chemistry.

Relevant Experience - 25 years

President of Data Analysis Technologies, Inc.; Responsible for the daily operation of the laboratory, technical review, environmental project management and coordination and environmental laboratory analysis.

Dr. Mitchum was founder and president of Triangle Laboratories of Columbus, Inc. and vice-president of Triangle Laboratories, RTP, Inc. He managed the laboratory and performed planning and scheduling activities. He performed environmental project management and coordination and laboratory analysis.

Dr. Mitchum was responsible for the environmental analytical chemistry program at Battelle-Columbus. In this capacity he developed new market areas, introduced new technology for analysis and remediation and was responsible for the overall quality of the analytical chemistry research area at Battelle-Columbus.

Dr. Mitchum led the development of regulatory methods and quality assurance presently in use today by the U.S. EPA for measuring toxic organic compounds in hazardous waste matrices, soil and tissue while directing the Quality Assurance Division, EPA, Las Vegas, NV. These methods have served as the basis for U.S. EPA regulatory activities in quality assurance and the monitoring area. These methods are presently being used for regulatory purposes under RCRA and SARA. The basic quantification and quality assurance parameters have been broadly used.

Also in this capacity he was responsible for the U.S. EPA Contract Laboratory Program (CLP) quality assurance function which provided quality assurance oversight to all analysis performed by contract laboratories throughout the United States. This included performing data audits, laboratory audits, standards and performance evaluation programs.

He was responsible for providing the quality assurance to the Love Canal Habitability Program. In this capacity he acted as an expert reviewing data, developing guidelines and certifying the overall quality of data. He worked with Region II EPA and State environmental coordinators to complete the assignment.

He was responsible for ensuring the quality of the National Dioxin Survey through quality assurance audits and expert panel reviews. In this capacity all aspects of the National Dioxin Survey for the distribution of dioxins and furans from all sources were reviewed. An expert panel was convened and Dr. Mitchum led the expert panel in discussions of the adequacy of testing methodologies, the data quality parameters and the review of the final report.

He was responsible for performing the assessment of the adequateness of the analytical and quality assurance procedures for the Veterans Dioxin in Blood study performed by the Center for Disease Control. In this capacity the quality assurance and methods were reviewed and audited. The adequateness of the procedures and testing methodology for dioxins and furans in human blood was assessed.

He was responsible for the organizing of international dioxin meetings while employed in the U.S. EPA and the U.S. FDA. He was responsible for major aspects of the 7th International Conference on Chlorinated Dioxins and Related Compounds, reviewing scientific submissions, organizing sessions and inviting speakers.

He is widely published in the analytical chemistry area having published over 40 abstracts and 70 peer reviewed papers and has given 71 oral presentations at scientific meetings.

D. JANE MITCHUM
B.S., Management Information Systems

Summary of Qualifications

Responsible for the management of finance and personnel. Operates computerized project management systems, accounting and inventory program. Manages data input and query for data validation staff. Trains data entry staff and supervises maintenance and retrieval operations.

As a Management Information Systems graduate possesses the skills to organize, interpret and query diverse databases. Computer programming skills in Cobal, Fortran, Basic, and Assembler languages. Managed unit operations in communications company for 12 years and was responsible for training and supervision.

Relevant Experience

1995-present	Vice President/CFO, Data Analysis Technologies, Inc., Plain City, OH.
1990-1995	Program Manager, Triangle Laboratories, Inc., Agrochemical Products Division, Columbus, OH.
1989-1990	Accounting Manager, E.P. Ferris & Associates, Inc., Columbus, OH.
1976-1978	Service Order Supervisor, Southwestern Bell Telephone Co., Little Rock, AR.
1965-1978	Service Order Supervisor, Southwestern Bell Telephone Co., Houston, TX.

Education

B.A. Management Information Systems, University of Nevada, Las Vegas, NV,

DOT 49 CFR Hazardous Materials 181 Workshop 3.2 CEU's	1996
American Red Cross Community CPR	1998
Hazardous Materials Training (DOT)	2000, 2003

Deborah K. Johnson
Chemistry Curriculum

Summary of Qualifications

Knowledge to interpret the organic and inorganic data from instrumentation, such as Hewlett Packard HPLC 1050, Hewlett Packard 11046A Fluorescence Detector, Dionex Ion Chromatograph Model 500, Finnigan 455 GC/MS, Hewlett Packard G1723A, 6890/5973 MS, Perkin Elmer Optima 2000 ICP, and Perkin Elmer FIMS 100 Mercury Analyzer.

Instrumentation Skills

Dionex Ion Chromatograph Model 500, Perkin Elmer Optima 2000 ICP, and Perkin Elmer FIMS 100 Mercury Analyzer.

Professional Experience

2005-Present	Quality Assurance Manager/Safety Officer, Data Analysis Technologies, Inc., Plain City, OH.
1994-2005	Laboratory Manager, Aqua Tech Environmental Laboratories, Marion, OH.
1988-1994	Metals Section Supervisor, Aqua Tech Environmental Laboratories, Marion, OH.
1979-1988	Chemist, Aqua Tech Environmental Laboratories, Marion. OH.
1978-1979	Laboratory Technician, Quality Assurance Lab, The Quaker Oats Company, Marion, OH

Education

1975-1977	Chemistry Curriculum, University of Dayton, Dayton, OH.

USEPA Seminar on Hazardous Waste Analysis	1984
American Chemical Society Short Course on Microwave Digestion	1988
American Chemical Society Short Course on Good Laboratory Practices	1990
Thermo-Jarrell Ash Training course for ICP Analysis	1990
Perkin Elmer Training Course on Graphite Furnace Analysis	1992
Telecation Training Course on Contract Lab Program Reporting	1992

C. SCOTT MITCHUM
Biology Curriculum

Summary Qualifications

Performs instrumental analysis using HRGC/HRMS, GC/MS, HPLC and GC techniques. Responsible for the interpretation of data associated with the instrumental techniques. Responsible for the calibration and maintenance of analytical instruments including GC, GC/MS, HRGC/HRMS and HPLC. Operates independently and reports directly to the lab manager.

Instrumentation Skills

Hewlett Packard HPLC 1050, Dionex Ion Chromatograph Model 2000, Hewlett Packard Fluorescence and UV Detectors, Varian 3700 Gas Chromatograph, Hewlett Packard 5890 Series II Gas Chromatograph, Finnigan Model 4500 GC/MS, Hewlett Packard 5973 GC/MS/DS, Hewlett Packard 6890 GC-FID, VG Model 70 VSE High Resolution Masspectrometer, Micromass Autospec Ultima, Micromass Autospec ProSpec.

Relevant Experience

1995-present	Chemist, Data Analysis Technologies, Inc., Plain City, OH.
1993-1995	Laboratory Technician, Triangle Laboratories of Columbus, Dublin, OH
1990-1992	Research Assistant, University of Nevada, Department of Ecology, Las Vegas, NV
1988-1990	Laboratory Technician, The Ohio State University, Department of Biotechnology, Columbus, OH

Education

1993-1995	The Ohio State University, Biology Curriculum, Minor Chemistry, Columbus, OH.
1990-1992	University of Nevada, Biology Curriculum, Las Vegas, NV.
1988-1990	The Ohio State University, Biology Curriculum, Columbus, OH

VG Model 70 VSE High Resolution Masspectrometer Course	2000
Comprehensive Capillary GC Seminar	1999
Ion Chromatography Workshop	1997

HPLC Seminar	1996
HPLC 1050 Maintenance Course	1994
American Red Cross Community CPR	1998

STEVEN M. MORRIS
B.E., Communications

Summary Qualifications

Laboratory skills include sample log-in and wet chemistry procedures. Method development for instrumentation with emphasis on ICP, GC and GC/MS. Reports to the laboratory manager.

Instrumentation Skills

Inorganic analysis utilizing GFAA, CVAA, ICP and ICP/MS methods. Performs operation, maintenance, and analysis utilizing Varian 3700 Gas Chromatograph, Hewlett Packard 5890 Series II Gas Chromatograph, Hewlett Packard 5973 GC/MS/DS, Hewlett Packard 6890 GC-FID, and Finnigan 4500 GC/MS.

Professional Experience

2002-present	Chemist, Data Analysis Technologies, Inc., Plain City, OH.
2001-2002	Quality Assurance Technician, Data Analysis Technologies, Inc., Plain City, OH.
1993-1995	Laboratory Technician IV, Aqua Tech Environmental Laboratories, Inc., Marion, OH.

Education

B.E.	Communication, University of Toledo, Toledo, OH.

JOHN J. KALTENBACH, III
B.S., Biology

Summary Qualifications

Laboratory skills include sample log-in and wet chemistry procedures; high-reproducibility titration of acids and bases. Method development for instrumentation with emphasis on HPLC.

Instrumentation Skills

Proficient in the operation Hewlett Packard HPLC 1050 and 1100, Dionex Ion Chromatograph Model 2000, Hewlett Packard Fluorescence and UV Detectors, as well as, laser particle counter, AA, UV and IR, GC.

Professional Experience

2003-present	Chemist, Data Analysis Technologies, Inc., Plain City, OH.
1992-2003	Research Chemist, Capital Resin Corporation, Columbus, OH

Education

B.S.	Biology, University of Dallas, Irving, TX

DANIEL W. EWALD
B.A., Chemistry

Summary Qualifications

Method development for instrumentation with emphasis on ICP. Operates independently applying EPA Method 29, EPA SW-846, 0010 and other methods for inorganic and organic analysis. Performs inorganic digestions and data interpretation, responsible for Method 8270C. Reports to the laboratory manager.

Instrumentation Skills

Inorganic analysis utilizing GFAA, CVAA, ICP and GC-MS methods.

Professional Experience

2005-present	Chemist, Data Analysis Technologies, Inc., Plain City, OH.
2004-2005	Chemist, Nestle Quality Assurance Labs, Dublin, OH

Education

B.A.	Chemistry, The Ohio State University, Columbus, OH

CURRICULUM VITAE

Ronald K. Mitchum, Ph.D.

Education:

B.S. Chemistry, 1968 Southwestern Oklahoma State University
Ph.D., Organic Chemistry, 1972 Oklahoma State University

Professional Experience

1995-present:	Data Analysis Technologies, Inc., President
1990-1995:	Triangle Laboratories, Inc., Agrochemical Products Division, Columbus, OH, President
1988-1990:	Department Manager: Methods Development Department, Battelle Memorial Institute, Columbus, Ohio.
1984-1988:	U.S. EPA-Environmental Monitoring Systems Laboratory, Las Vegas, Nevada. Director, Quality Assurance Division.
1982-1984:	National Center for Toxicological Research, Department of Health and Human Services, Jefferson, Arkansas. Director, Division of Chemistry.

1980-1984:	Consultant, Finnigan Corporation, Research, Development and Design.
1979-1984:	Adjunct Associate Professor of Chemistry, University of Arkansas.
1983-1984:	Adjunct Associate Professor, School of Medicine, University Medical Center, Little Rock, Arkansas.
1979-1982:	National Center for Toxicological Research, Department of Health and Human Services, Jefferson, Arkansas. Supervisory Research Chemist, Chief, Spectroscopic Techniques Branch.
1976-1979:	National Center for Toxicology Research, Department of Health and Human Services, Jefferson, Arkansas. Research Chemist.
1975-1976:	University of Nebraska, Lincoln, Nebraska. Senior Postdoctoral Fellow; Kinetics of gas phase reactions.
1974-1975:	University of Warwick, Coventry, England. Postdoctoral Research Fellow; Development of negative ion gas phase chemistry.
1972-1974:	University of Houston, Houston, Texas. Postdoctoral Research Fellow; Theoretical and analytical chemical ionization mass spectrometry.

Selected Invitations and Achievements

(1) Invited to participate in WHO/IARC Methods Validation, Lyon, France, 1984.

(2) Invited to participate in workshop on Risk Assessment in Reproductive and Developmental Toxicology, Little Rock, Arkansas, 1987.

(3) Invited to present a lecture on the "Practical Implementation of the TCLP", California Water Pollution Control Association, Sacramento, California, 1988.

(4) Invited to organize a Symposium on Environmental Analysis, 9th Rocky Mountain ACS Meeting, 1988.

(5) Invited to organize and chair a session of the 7th International Symposium on Chlorinated Dioxins and Related Compounds, Las Vegas, Nevada, 1987.

(6) Invited to participate in a workshop on Chemical Measurements of Aerosols and Associated Vapors, UCLA, Los Angeles, California, 1988.

(7) Invited to author chapter in book "Instrumental Analysis of Pollutants Handbook," Elsevier, 1988.

(8) Invited to present plenary lecture, - 3rd International Conference on Analytical Environmental Chemistry, Chung Li, Taiwan, 1988.

(9) Invited to present Keynote lecture on "Analytical Chemistry and the Regulatory Agencies", Ohio Valley Chromatography Symposium, 1988.

(10) Invited to present lecture on "A Government Perspective" before the Analytical Instrumentation (SAMA), 1988.

(11) Invited to present a lecture before the EPA Region 9 Laboratory Directors Meeting, San Francisco, California, 1988.

(12) Invited to present a lecture before the 12th Symposium on Aquatic Toxicology and Hazard Assessment, Sparks, Nevada, 1988.

(13) Guest Editor, Chemosphere vol. 18, 1989.

(14) Invited to chair an EPA panel on TSCA Section 4 submissions, 1988.

(15) Invited to present lecture on Trace Analysis of Xenobiotics in Food Products, ACUPM/APHIS, Bethesda, MD, 1989.

(16) Invited to present lecture at HAZTECH-91 on "Lab Audits, Good Laboratory Practices and Data Validation", Pittsburgh, PA, 1991.

Membership in Professional or Honorary Societies

American Chemical Society, 1968 (Member)
American Society for Mass Spectrometry, 1975 (Member)
Association of Official Analytical Chemistry, 1989 (Member)
Air & Waste Management Association, 1995 (Member)

Offices, Committee Assignments Held in Professional and Honorary Societies

Chairman, Analytical Chemistry Session, Southwest Regional American Chemical Society meeting, 1979.

Chairman Elect (1983) of the Central Arkansas section of the American Chemical Society.

Chairman (1984) of the Central Arkansas section of the American Chemical Society. Editorial Board member, Journal Environmental and Biomedical Mass Spectrometry, 1985-1989.

Selected Oral Presentations

(1) R. K. Mitchum, "Advances in Analytical Methods for Dioxins and Furans," Presented before the Symposium on Advances in Analytical Methods for Monitoring Organic Chemicals in the Environment-Water and Hazardous Wastes, Cincinnati, Ohio, 1984.

(2) J. R. Donnelly, W. D. Munslow, T. L. Vonnahme, N. J. Nunn, G. W. Sovocool and R. K. Mitchum, "Extension of EPA RCRA Method 8280 to Analysis of Synthetic Bromo- and Bromochloro-Dioxins and Dibenzofurans," presented before the 7th International Symposium on Chlorinated Dioxins and Related Compounds", Las Vegas, NV, 1987.

(3) E. Nabb, D. Cardenes, J. R. Donnelly, L. C. Butler, R. F. Smiecinski, R. K. Mitchum, C. N. Rowland, "The Application of ICP/MS to Environmental Samples," presented before American Society for Mass Spectrometry, 35th Annual Conference, 1987.

(4) R. K. Mitchum, "Overview of EPA Methods and Quality Assurance," EPA Regional Laboratory Directors, San Francisco, California, 1987.

(5) R. K. Mitchum, "Practical Implementation of the TCLP," California Water Pollution Control Association, Sacramento, California, 1988.

(6) R. K. Mitchum, G. W. Sovocool, S. R. Donnelly, and W. D. Munslow, "Brominated Dioxins and Furans," The Engineering Foundation Conference, Santa Barbara, California, 1988.

(7) R. K. Mitchum, "Quality Assurance for Laboratory Analysis," Workshop on Environmental Chemistry, Taipei, Taiwan, 1988.

(8) R. K. Mitchum, "U.S. EPA Analytical Methodology, 3rd Annual Symposium on Analytical Chemistry, Chung Li, Taiwan, 1988.

(9) R. K. Mitchum, "Methods Development and Quality Assurance: EPAs Role," Ohio Valley Chromatography Symposium, Hueston Woods, Ohio, 1988.

(10) R. K. Mitchum, "Robotics: A Laboratory Perspective" Region 9 Laboratory Directors Conference, San Francisco, California, 1988.

(11) R. K. Mitchum, "Interagency Methods Harmonization: A Question of Need and Applicability", 12th Symposium on Aquatic Toxicology and Hazard Assessment, Sparks, Nevada, 1988.

(12) R. K. Mitchum, "Trace Analysis of Xenobiotics in Foods, Symposium 89 Epidemiology, Zoonoses, and Economics, Bethesda, MD, 1989.

(13) R. K. Mitchum, "Laboratory Audits, Data Validation and Good Laboratory Practices", HAZTECH-91, Pittsburgh, PA, 1991.

Selected Publications

(1) R. K. Mitchum and S. Pyle, "Environmental Applications of the Ion Trap Mass Spectrometer," Spectra, 11, 21 (1988).

(2) R. K. Mitchum, "Environmental Levels and Fate of Dioxins and Furans," Chemosphere, 16, 2193 (1987).

(3) W. A. Korfmacher, L. D. Betowski, C. L. Holder and R. K. Mitchum, "Characterization of Doxylamine and Pyrilamine Metabolites via TS/MS and TS/MS/MS," Biomed. Environ. Mass Spectrom., 15, 561 (1988).

(4) G. W. Sovocool, R. K. Mitchum, Y. Tondeur, W. D. Munslow, T. L. Vonnahme, and J. R. Donnelly, "Bromo- and Bromochloro-Polynuclear Aromatic Hydrocarbons, Dioxins and Dibenzofurans in Municipal Incinerator Fly Ash," Biomed. Environ. Mass Spectrom., 15, 669 (1988).

(5) G. W. Sovocool, J. R. Donnelly, W. D. Munslow, T. L. Vonnahme, N. J. Nunn, Y. Tondeur, and R. K. Mitchum, "Analysis of Municipal Fly Ash for Br- and BrCl-dioxins and Dibenzofurans and Related Compounds," Chemosphere, 18, 193-200 (1989).

(6) J. R. Donnelly, W. D. Munslow, T. L. Vonnahme, N. J. Nunn, G. W. Sovocool, and R. K. Mitchum, "Preparation of BrCl Dioxins and Dibenzofurans and Analysis by RCRA 8280," Chemosphere, 18, 209-216 (1989).

(7) W. D. Munslow, J. R. Donnelly, R. K. Mitchum, and G. W. Sovocool, "Synthesis of Polyhalogenated Dibenzo-p-dioxins," Chemosphere, 18, 225-233 (1989).

(8) R. K. Mitchum, "Mass Spectrometry of Environmental Pollutants," invited chapter in Instrumental Analysis of Pollutants Handbook, C. N. Hewitt, ed., Elsevier Applied Science Pubs., LTD, Essex, England, in press (1991).

(9) R. K. Mitchum and J. R. Donnelly, "Quality Assurance/Quality Control Procedures for PCDD, PCDF and PCB Analysis", Chapter 9 in Environmental Carcinogens - Methods of Analysis and Exposure Measurement Volume 11 -Polychlorinated Dibenzodioxins, Dibenzofurans and Biphenyls, in press by International Agency for Research on Cancer, Lyon, France, 1990.

(10) J. R. Donnelly, A. H. Grange, N. J. Nunn, G. W. Sovocool, W. C. Brumley and R. K. Mitchum, "Analysis of Thermoplastic Resins for Brominated Dibenzofurans", Biomed. Environ. Mass Spectrom., 18, 884-896 (1989).

(11) Y. Tondeur, F. Varco, M. Chu, R. K. Mitchum, J. Hass, C. Mazac, D. McAllister, P. Rankin, R. Gorsich and M. Freiberg, "Ultra-Trace PBDD/PBDF in Retardant Chemicals: A New Methodology, Development Challenges and QA Guidelines", Kyoto Conference in Dioxins; MSW Incineration, 1991.

APPENDIX I

GLOSSARY OF TERMS

Group Leaders: Laboratory staff is under the guidance of a group leader. No more than four laboratory personnel shall report to one group leader.

Laboratory Control Sample/Laboratory Control Duplicates: Blanks that are spiked with a known amount of one or more of the analytes for which the samples are being analyzed.

LIMS: Laboratory Informational Management System

Master Schedule: Listing and status of all active in-house projects.

Matrix Spike/Matrix Spike Duplicates: Samples that are spiked with a known amount of one or more of the analytes for which the samples are being analyzed.

Method Blank: Blank associated with a project that is carried through the preparation and analysis of the project.

Phase Inspections: Quality assurance audit of a particular aspect of a working project.

Project: The batch of samples sent by a client for analysis under one chain of custody.

Quality Assurance Program: Implementation of DAT's Quality Systems in the laboratory.

Quality Systems Documents: DAT's quality assurance manual, standard operating procedures, position descriptions, waste management plan, facilities management plan and company succession plan which comprise the Quality System of DAT.

SOP: Standard Operating Procedure

Surrogates: Non-interfering analytes of a known amount spiked into the samples, laboratory spikes, matrix spikes and blanks of an analysis type.

UPS System: Uninterruptible power supply.