IMPLEMENTATION WORK PLAN
CENTREDALE MANOR RESTORATION SUPERFUND SITE
NORTH PROVIDENCE, RHODE ISLAND

August 6, 2001

Prepared for

CENTREDALE MANOR PERFORMING PARTIES GROUP
c/o Swidler Berlin Shereff Friedman LLP
3000 K Street, NW Suite 300
Washington, DC. 20007

Prepared by

LOUREIRO ENGINEERING ASSOCIATES, INC.
100 Northwest Drive
Plainville, Connecticut

Comm. No. 15RP101.001

SDMS DocID 27017

Table of Contents

		Page
1.	**INTRODUCTION**	**1-1**
1.1	Site Description	1-1
1.2	Site History	1-2
1.3	Previous Removal Actions	1-2
1.4	NTCRA Objectives	1-3
1.5	Implementation Phase Meetings	1-3
1.5.1	Preconstruction Meeting	1-3
1.5.2	Progress Meetings	1-4
1.5.3	Weekly Dam Reconstruction Meetings	1-4
1.5.4	Pre-Final Inspection	1-4
1.5.5	Final Inspection	1-4
1.6	Implementation Phase Reports	1-4
1.6.1	Progress Reports	1-4
1.6.2	Completion of Work Report	1-5
2.	**SITE SURVEYS**	**2-1**
2.1	Pre-Construction Photographic Survey	2-1
2.2	Topographical Survey and Sample Location	2-1
2.3	Confirmatory Survey	2-1
2.4	Post-Construction Photographic Survey	2-2
3.	**SITE MANAGEMENT**	**3-1**
3.1	Access Agreements and Site Access	3-1
3.2	Site Security	3-1
3.3	Work Zones	3-2
3.4	Field Office Trailer and Material Staging Areas	3-3
3.4.1	Field Office Trailer	3-3
3.4.2	Equipment Staging Area	3-3
3.4.3	Construction Material Staging Area	3-3
3.4.4	Waste Storage Area	3-4
3.5	Transportation Routes	3-4
3.6	Decontamination Facilities	3-4
3.7	Management and Key Personnel	3-5
3.7.1	LEA Personnel	3-5
3.7.1.1	Project Manager	3-5
3.7.1.2	Resident Engineer	3-6
3.7.1.3	Health and Safety Personnel	3-6
3.7.1.4	Field Personnel	3-6
3.7.1.5	Laboratory Personnel	3-6

3.7.2 LCI Personnel 3-7
3.8 Potential Subcontractors 3-7
3.8.1 LEA Subcontractors 3-7
3.8.2 LCI Subcontractors 3-7
3.9 Financial Reports 3-7

4. WASTE MANAGEMENT 4-1

4.1 Waste Handling and On-Site Transportation 4-1
4.1.1 Hazardous Soil and Sediment 4-1
4.1.2 Dewatering and Decontamination Wastewater 4-2
4.1.3 Disposable PPE 4-2
4.1.4 Clearing and Grubbing Debris 4-2
4.1.5 Debris from Dam Demolition 4-2
4.2 Waste Storage 4-3
4.2.1 Hazardous Soil and Sediment 4-3
4.2.2 Dewatering and Decontamination Wastewater 4-3
4.2.3 Disposable PPE 4-4
4.2.4 Clearing Debris 4-4
4.2.5 Debris from Dam Demolition 4-4
4.3 Waste Characterization for Disposal 4-4
4.3.1 Hazardous Soil and Sediment 4-4
4.3.2 Dewatering and Decontamination Wastewater 4-4
4.3.3 Disposable PPE 4-5
4.3.4 Clearing Debris 4-5
4.3.5 Debris from Dam Demolition 4-5
4.4 Waste Transportation and Disposal 4-5
4.4.1 Hazardous Soil and Sediment 4-5
4.4.2 Dewatering and Decontamination Wastewater 4-6
4.4.3 Disposable PPE 4-6
4.4.4 Clearing Debris 4-6
4.4.5 Debris from Dam Demolition 4-6

5. DATA MANAGEMENT 5-1

5.1 Data Management Team 5-1
5.2 Field Sample Tracking 5-2
5.3 Data Collection 5-3
5.3.1 Field Measurements 5-3
5.3.2 On-site Analytical Measurements 5-3
5.3.3 Off-site Analytical Measurements 5-4
5.3.4 Survey Data 5-4
5.4 Field Sampling Quality Assurance 5-4
5.5 Chain-of-Custody 5-4
5.6 Analytical Database Repository 5-5
5.6.1 Database Administration 5-5
5.6.2 Electronic Data Entry 5-5

5.6.3 Manual Data Entry 5-6
5.6.4 Archiving of Data 5-6
5.7 Data Validation 5-6
5.8 Data Presentation 5-7
5.8.1 Analytical Data Presentation 5-7
5.8.2 Site Drawings 5-8
5.8.3 Graphical Data Display 5-8
5.9 File Organization 5-8
5.10 EPA Electronic Data Submissions 5-9

6. SAMPLING AND ANALYSIS PLAN 6-1

6.1 Field Sampling Plan 6-1
6.2 Quality Assurance Project Plan 6-1

7. APPLICABLE OR RELEVANT AND APPROPRIATE REQUIREMENTS 7-1

7.1 Protection of Wetlands and Freshwater Wetlands Act 7-1
7.2 Floodplain Management 7-1
7.3 Rivers and Harbors Act 7-2
7.4 Clean Water Act 7-2
7.5 Hazardous Waste Management 7-2
7.6 RI Remediation Regulations 7-3
7.7 RI Air Pollution Control Regulation #5, Fugitive Dust 7-3

8. SOIL AND SEDIMENT REMOVAL ACTIVITIES 8-1

8.1 Site Preparation and Mobilization 8-1
8.1.1 Roll-off Containment Pad 8-1
8.1.2 Excavation Area Layout 8-1
8.1.3 Fence Dismantling 8-2
8.1.4 Soil Erosion and Sediment Control 8-2
8.1.5 Clearing and Grubbing 8-2
8.1.6 Clearing Areas to be Inundated by Restored Pond 8-2
8.1.7 Cofferdams 8-3
8.2 Site Excavation 8-3
8.2.1 Dewatering 8-3
8.2.2 Soil Stabilization 8-3
8.2.3 Soil Excavation 8-4
8.2.4 Confirmatory Sidewall and Bottom Sampling 8-4
8.2.5 On-Site Soil and Sediment Transport 8-4
8.2.6 Soil and Sediment Storage 8-5
8.2.7 Soil and Sediment Transportation and Disposal 8-5
8.3 Site Restoration 8-5
8.3.1 Backfill 8-5
8.3.2 Topsoil 8-6
8.3.3 Seed and Mulch 8-6

8.3.4 Tree and Shrub Restoration 8-6
8.3.5 Fence Restoration 8-6

9. DAM RESTORATION ACTIVITIES 9-1

9.1 Site Preparation 9-1
9.1.1 Gate Structure 9-1
9.1.2 Clearing 9-2
9.1.3 Access Roads 9-2
9.1.4 Cofferdam 9-2
9.1.5 Excavation Layout 9-3
9.2 Demolition 9-3
9.2.1 Existing Dam Removal 9-3
9.2.2 Granite Wall 9-3
9.3 Reconstruction 9-4
9.3.1 Dewatering 9-4
9.3.2 Soil and Sediment Excavation 9-4
9.3.3 Dam Reconstruction 9-4
9.3.4 Fish Ladder 9-5
9.3.5 Soil Backfill 9-5
9.4 Site Restoration 9-5
9.4.1 Topsoil 9-5
9.4.2 Seed and Mulch 9-5
9.5 As-Built Survey 9-5
9.6 Operation and Maintenance 9-6

10. CONSTRUCTION QUALITY CONTROL 10-1

10.1 Quality Control Organization and Personnel 10-1
10.2 Quality Control Phases 10-1
10.2.1 Preparatory Phase 10-1
10.2.2 Initial Phase 10-2
10.2.3 Follow Up Phase 10-2
10.3 Submittal Review 10-2
10.4 Testing Verification and Documentation 10-2
10.4.1 Test Reports 10-2
10.4.2 Daily Field Inspection Forms 10-3
10.5 Deficiencies and Corrective Actions 10-3
10.6 Documentation 10-3
10.7 Completion Inspections 10-3

11. HEALTH AND SAFETY 11-1

12. EMERGENCY CONTINGENCY PLAN 12-1

12.1 General Site and Contact Information 12-1

12.2 Incident Command 12-2
12.2.1 Duties and Responsibilities 12-2
12.2.1.1 Initial Observer 12-2
12.2.1.2 Incident Commander 12-3
12.2.1.3 On-Site Responders 12-5
12.2.1.4 Off-Site Responders 12-5
12.2.2 Notification Procedures 12-6
12.2.2.1 "Internal" Notification Requirements 12-6
12.2.2.2 "External" Notification Requirements 12-6
12.3 Emergency Response Procedures 12-7
12.3.1 Implementation 12-7
12.3.2 Discovery 12-8
12.3.3 Initial Response 12-8
12.3.3.1 Operational Procedures 12-8
12.3.3.2 Identification of Hazardous Materials 12-9
12.3.3.3 Hazard Assessment 12-9
12.3.4 Response Procedures for Fire and/or Explosion Involving Hazardous Waste 12-9
12.3.5 Response Procedures for Spills or Releases of Hazardous Waste 12-10
12.3.6 Mitigation 12-11
12.3.7 Evacuation Plan 12-11
12.3.7.1 General Responsibilities 12-11
12.3.7.2 Emergency Precautions 12-12
12.3.7.3 Communication 12-12
12.3.7.4 Procedure for Evacuation 12-12
12.3.8 Post-Emergency Actions 12-12
12.3.9 Post-Emergency Equipment Maintenance and Waste Disposal 12-13
12.4 Emergency Equipment 12-13
12.5 Incident Reporting Requirements 12-13
12.5.1 General 12-13
12.5.2 Any Release/Incident 12-14
12.5.3 Releases Reportable Under CERCLA 12-14
12.5.4 Releases reportable under SARA Title III 12-14
12.5.5 Releases Requiring the Implementation of the Contingency Plan 12-15
12.6 Amendment and Distribution of the Plan 12-15

13. COMMUNITY RELATIONS SUPPORT PLAN 13-1

13.1 Supporting Tasks 13-1
13.1.1 Working Relationships 13-1
13.1.2 Public Meetings 13-1
13.2 Documentation 13-2
13.3 Individual Property Owners 13-2

14. SCHEDULE 14-1

15. INSTITUTIONAL CONTROLS PLAN 15-1

16. DISCLAIMER AND CERTIFICATION STATEMENT 16-1

TABLES

Table 2-1 Sample Locations with Dioxin Concentrations Exceeding 1 ppb TEQ
Table 3-1 Critical Access Agreements
Table 3-2 Non-Critical Access Agreements
Table 6-1 EPA Electronic Data Submission Table Name and Definitions
Table 6-2 Field Definitions, EPA Electronic Data Submission
Table 7-1 Non-Time Critical Removal Action ARARs
Table 10-1 Submittals and Testing Requirements

FIGURES

Figure 1-1 Site Location Map
Figure 3-1 Field Office Trailer and Storage Area
Figure 4-1 Containment Pad Design
Figure 10-1 Preparation Phase Inspection Checklist
Figure 10-2 Initial Phase Inspection Checklist
Figure 10-3 Follow Up Phase Inspection Checklist
Figure 10-4 Job Hazard Analysis Checklist
Figure 10-5 Daily CQC Report
Figure 14-1 Implementation Schedule

DRAWINGS

Drawing 3-1 Site Layout Drawing
Drawing 3-2 Site Layout Drawing
Drawing 3-3 Site Layout Drawing
Drawing 3-4 Site Layout Drawing

APPENDICES

Appendix A Site-Specific Health and Safety Plan
Appendix B Sample Access Agreement
Appendix C Field Sampling Plan
Appendix D Quality Assurance Project Plan
Appendix E Soil and Sediment Removal Specifications
Appendix F Dam Reconstruction Specifications
Appendix G Project Standard Operating Procedures (SOPs)
Appendix H Dam Basis of Design Report

ACRONYMS

ACPs	Area Contingency Plans
ARARs	Applicable and Relevant and Appropriate Requirements
CERCLA	
COC	Contaminant of Concern
CQC	Construction Quality Control
CRSP	Community Relations Support Plan
CRZ	Contaminant Reduction Zone
CWR	Completion of Work Report
EPA	United States Environmental Protection Agency
EZ	Exclusion Zone
FSP	Field Sampling Plan
GEI	GEI Consultants, Inc.
GPR	Ground Penetrating Radar
HASP	Site Specific Health and Safety Plan
HSM	Health and Safety Manager
HSO	Health and Safety Officer
HSS	Health and Safety Supervisor
LCI	LEA- Cianci, Inc.
LEA	Loureiro Engineering Associates, Inc.
LEPC	Local Emergency Planning Committee
MSDSs	Material Safety Data Sheets
NTCRA	Non-Time Critical Removal Action
ppb	parts per billion
PPE	Personal Protective Equipment
ppt	parts per trillion
QA/QC	Quality Assurance/Quality Control
QAPP	Quality Assurance Project Plan
RCPs	Regional Contingency Plans
Respondents	the Centredale Manor Performing Parties Group
RIDEM	Rhode Island Department of Environmental Management
SAP	Sampling and Analysis Plan
SERCs	State Emergency Response Commissions
SOPs	Standard Operating Procedures
SOW	Statement of Work
SZ	Safe Zone
TCDD	2,3,7,8-tetrachlorodibenzo-p-dioxin
TEQ	Total Equivalents
The Site	The Centredale Manor Restoration Superfund Site
UAO	Unilateral Administrative Order
Work Plan	Implementation Work Plan

1. INTRODUCTION

In response to the Unilateral Administrative Order (UAO) issued by the Environmental Protection Agency's (EPA) on March 26, 2001, Loureiro Engineering Associates, Inc. (LEA) on behalf of the Centredale Manor Performing Parties Group (Respondents) has prepared this Implementation Work Plan (Work Plan). This Work Plan has been prepared in accordance with the statement of work (SOW) included as part of the UAO for the Non-Time Critical Removal Action (NTCRA) at the Centredale Manor Restoration Superfund Site (the Site) in North Providence, Rhode Island. This Work Plan describes all of the activities necessary to implement the requirements and objectives of the NTCRA as described in the SOW.

1.1 Site Description

The Centredale Manor Restoration Superfund Site is located in North Providence, Rhode Island. The main portion of the Site consists of two parcels, 2072 and 2074 Smith Street (or, Plat 14, Lots 200 and 250, encompassing approximately 9.7 acres). The Site includes sediment and floodplain areas of the Woonasquatucket River from Route 44 southerly to the breached Allendale Dam and further to an area just below the Lymansville Dam. The location of the Site is shown on Figure 1-1 - Site Location Figure.

The Centredale Manor property is located at 2074 Smith Street (also known as Route 44). The coordinates for the property are latitude: 41° 51' 29.5" North and longitude: 71° 30' 28.5" West. The 4.74-acre property is registered as Plat 14, Lot 250 in the Land Evidence Records of North Providence, Rhode Island. The Site is currently used as housing facility for the elderly. Approximately half of the 4.74 acres are covered by the Site's eight-story apartment building and two paved parking lots. The remaining portions of the property are landscaped with maintained lawns and trees.

The property is bordered to the north and northeast by Brook Village, a high rise residential building for the elderly; to the east and southeast by a small wooded area, a perennial drainage channel and a residential neighborhood; to the south by a wooded area; and to the southwest, west and northwest by the Woonasquatucket River and a drainage channel. The Woonasquatucket River and the drainage channel converge approximately 0.2 miles south of the property.

1.2 Site History

In the 1930's, Centredale Worsted, a textile mill, was located on the property. In the early 1940's, Atlantic Chemical Company utilized a portion of the site to manufacture chemicals. In 1953, Atlantic Chemical Company changed its name to Metro-Atlantic, Inc. and operated until the late 1960's. Metro-Atlantic, Inc. changed its name to Crown-Metro, Inc. in the late 1960's and ceased operation in the early 1970's. New England Container Company also utilized a portion of the Site for barrel reclamation from 1952 to the early 1970's. . Sometime in the early 1970's a major fire destroyed most of the structures on site. The remaining buildings were razed. The current buildings at the Site, Brook Village Apartments and Centredale Manor Apartments, were constructed in 1977 and 1982, respectively.

In October and November of 1977, the Rhode Island Department of Environmental Management (RIDEM) conducted several investigations at the property in response to complaints of fumes and odors. Approximately four hundred, 55-gallon drums were observed by RIDEM representatives on the property and in a swampy area near the Woonasquatucket River. From December 1979 to March 1981, RIDEM periodically inspected the property and in 1980, RI DEM observed and inventoried approximately six hundred 55-gallon drums scattered on the property. In February 1982, prior to the construction of the apartment building, 300 to 400 drums were removed from the property containing various hazardous substances.

1.3 Previous Removal Actions

During the construction of the Centredale Manor Apartment complex, soil and drum removal activities were conducted under direct RIDEM supervision. Approximately 6,000 tons of soil and an unknown number of drums were shipped off-site for disposal. In addition, approximately 300 to 400 drums were removed from trash piles and from within the swamp adjacent to the apartment complex and disposed off-site. In March of 1996, a contractor for RIDEM conducted a ground penetrating radar (GPR) investigation to determine whether tanks or additional drums were buried on the Site. Three areas identified anomalies consistent with buried metal debris but did not conclusively identify anomalies associated with buried drums or tanks.

In 1999, a series of Time-Critical Removal Actions were implemented that were proposed in the initial Action Memorandum for the Site. The Removal Actions included clearing and grubbing of approximately 6-acres of the Site, the collection of over six hundred samples, the installation of over a mile of cedar and chain-link fencing, and the installation of two interim measure soil caps over areas of significant dioxin contaminated soil and sediment.

1.4 NTCRA Objectives

Elevated levels of dioxin exist in the residential use soil and sediment in and around Allendale Pond, Lymansville Pond and the reach of the Woonasquatucket River that connect the two Ponds. Specifically, the single contaminant of concern (COC) is 2,3,7,8-tetrachlorodibenzo-p-dioxin (TCDD) as identified in the Action Memorandum for the NTCRA dated January 18, 2001. The objectives of the NTCRA as identified in the Action Memorandum are;

- To prevent the migration of TCDD contaminated sediments to downstream areas,
- To eliminate or reduce the risk of human exposure to flood plain sediments containing TCDD concentrations exceeding the removal action goal, and
- To eliminate or reduce the risk of human exposure to residential use soils containing concentrations of dioxin in excess of the removal action goal.

The removal action goal for the project has been determined to be 1.0 part per billion (ppb) of toxicity equivalent (TEQ) of 2,3,7,8-TCDD. Residential use soil and sediment containing greater than 1 ppb TEQ will require removal, except for sediment that will be covered with a minimum of 1 foot of water at the completion of reconstruction activities of the Allendale Dam. Reconstruction of the dam will also prevent further migration of sediment containing concentrations of TCDD beyond Allendale Pond.

1.5 Implementation Phase Meetings

During the implementation phase of the work associated with the NTCRA, the Respondents are required to provide information on the status of the project through a series of meetings. The meetings are specified in the SOW and have been summarized below. Additional contractor/subcontractor meetings will be conducted during the reconstruction of the dam on a weekly basis to coordinate work and confirm that completed and upcoming tasks are in compliance with the 100% Design document - Allendale Dam Reconstruction Specifications and Drawings.

1.5.1 Preconstruction Meeting

A preconstruction meeting will be held within 10 days of the approval of the 100% design. The purpose of the preconstruction meeting is to ensure that all parties involved with performing and inspecting the work have identified the proper communication procedures, have discussed the construction quality control procedures and health and safety procedures for the work. The preconstruction meeting will cover the activities associated with reconstructing the Allendale

Dam and the activities associated with delineating the areas where soil and sediment has been proposed for removal.

1.5.2 Progress Meetings

Progress meeting will be held monthly with representatives from the EPA, RIDEM the Army Corps of Engineers (USACE), the Respondents and their contractors to discuss the status of the project and to discuss any issues that arise that affect the progress of implementation activities.

1.5.3 Weekly Dam Reconstruction Meetings

Prior to and during the reconstruction of Allendale Dam, weekly coordination meetings will be held with representatives from LEA, GEI Consultants, Inc. (GEI), USACE, and subcontractors to review the work that has been completed in the week prior to the meeting. The meeting will also serve to coordinate the work for the upcoming week including the integration of tasks and schedules for the timely completion of the work. Documentation of these meetings will be completed by the site superintendent for LEA and submitted to each attendee, the EPA, RIDEM and the project file.

1.5.4 Pre-Final Inspection

The Respondents upon substantial completion of the NTCRA will conduct a pre-final inspection to identify any unresolved issues and to develop a “punch list” of items that will require completion or repair.

1.5.5 Final Inspection

A final inspection will be conducted by the Respondents in order to assure that all of the items identified in the pre-final inspection punch list have been corrected or completed and to determine that all of the performance criteria for the NTCRA have been attained.

1.6 Implementation Phase Reports

During the implementation phase of the work associated with the NTCRA, the Respondents are required to provide reports of the status of the project. The requirements of the reports are specified in the SOW and have been summarized below.

1.6.1 Progress Reports

Monthly progress reports will be submitted by the Respondents during the implementation phase of the project. The progress reports will summarize all of the activities associated with the NTCRA that occurred during the previous month and those planned for the next month. In addition, the progress reports shall identify the percentage of construction completed, problems encountered during the previous month and problems that may affect the completion of the implementation schedule.

1.6.2 Completion of Work Report

At the completion of all of the work associated with the NTCRA, the Respondents will submit a Completion of Work Report (CWR) to include the following items;

- A synopsis of the work performed and a certification that it was performed in accordance with the SOW,
- An identification of any modifications to the SOW and why the changes were necessary to complete the work,
- A chronology of events for both the reconstruction of the dam and the soil and sediment removal activities,
- All analytical data, field paperwork, and results provided in tabular form,
- Validation reports of analytical data,
- QA/QC construction documentation,
- Photographs of the work,
- Volumes of soil, sediment and waste disposed from the Site including copies of all signed waste manifests,
- Final costs for the implementation of the work,
- A description of access restrictions and institutional controls for the Site,
- Preconstruction and post construction photographic surveys,
- As-built drawings and specifications reflecting any modifications or changes, and
- An electronic version of the database including all analytical data and drawings.

2. SITE SURVEYS

The site surveys proposed for the implementation phase of the project are intended to fully document the existing conditions at the Site before and after construction. Photographs taken at each of the proposed action areas will be used to document the conditions of each area. Field surveys and sample location will be performed by a surveyor licensed in the State of Rhode Island. All information will be presented to the EPA in a format suitable for use in the GIS currently being maintained for the Site as specified in Section 5 of this Work Plan.

2.1 Pre-Construction Photographic Survey

LEA will perform a preconstruction photographic survey of the Site to fully document the existing conditions prior to the initiation of activities at the Site. Specifically, the photographic survey will record all major topographic and landscape features within the Action Areas, the major components of Allendale Dam, and related historical features. Access routes, fencing, vegetation, etc. shall be photographed and written descriptions of all photos shall be provided.

2.2 Topographical Survey and Sample Location

A topographic survey will be performed by the surveyor contracted through LEA in order to layout the 92.5-foot and 93.5-foot elevation, the 10-year flood elevation and sample location with dioxin greater than 1 ppb TEQ in the action areas associated with Allendale Pond. The surveyor will also determine the elevation of the spillway over Lymansville Dam, locate the horizontal limits of the area which will be below at least one foot of water, the 10-year flood elevation and sample location with dioxin greater than 1 ppb TEQ in the action areas associated with Lymansville Pond. A benchmark will be provided in the vicinity of each of the proposed action areas to allow LEA to determine the elevation of each excavation. Sample locations will be located utilizing the northing and easting coordinates identified in the Access database provided by the EPA. The sample locations and the associated proposed remedial areas described in the Field Sampling Plan (FSP) are identified in Table 1.1 and in Figures 1-1 through 1-12 of the FSP.

2.3 Confirmatory Survey

At the completion of the soil and sediment removal activities, a topographic survey will be performed by the surveyor to confirm that a minimum of one-foot of water covers all sediment left in place that contains dioxin greater than 1ppb TEQ. LEA will utilize the benchmark set for each location during the excavation activities to verify that the sediment has been excavated to

the proper depth and elevation. Sediment that is found by the surveyor to exist above the one-foot of water cover and containing dioxin greater than 1 ppb TEQ will be removed and disposed off-site.

2.4 Post-Construction Photographic Survey

LEA will perform a post-construction photographic survey of each of the action areas to fully document the existing conditions at the completion of the restoration activities. Specifically, the photographic survey will record the replacement of any landscape features within the Action Areas including replacement of fences, lawn and plantings. In addition, the photographic survey will document the as-built conditions of the Allendale Dam, and any areas that were disturbed or modified due to the implementation of the NTCRA. Photographs will be taken prior to and after the restoration of the final water elevation in Allendale Dam. Written descriptions of all photos shall be provided and included in the CWR.

3. SITE MANAGEMENT

This section of the Work Plan has been provided to communicate the methods and means for the provision of site access, security, work areas including staging areas, trailer locations, decontamination facilities, transportation routes, project management and personnel, potential subcontractors and financial reports through out the implementation phase of the NTCRA. Waste management and Data Management are discussed in separate sections.

3.1 Access Agreements and Site Access

A total of 57 letters were sent via certified mail to the people or organizations that own properties along the Woonasquatucket River that will be or may be affected by contamination emanating from the Centredale Manor Site. Of the 57 letters that were sent out, only three owners denied LEA access to their properties. The agreements were divided into two categories: critical and non-critical. A total of 24 letters to owners for agreements were identified as critical. The remaining 33 properties were identified as non-critical. As of the submission of this report, one owner considered to be critical has not provided a response to access. Tables 3-1 and 3-2 provide a listing of the property owners that LEA requested access. The tables are identified as critical and non-critical properties, respectively. The tables identify the owners of each lot, their address, and whether access was approved or denied. Drawings 3-1 through 3-4, Site Layout Drawings show each of the lots where access was requested, the lot and plat numbers, and the owner of each property. A sample access agreement has been included as Appendix B to this Work Plan.

3.2 Site Security

Site security will be maintained to the maximum extent practicable utilizing the existing fences installed during the previous Time-Critical Removal Actions and temporary 6-foot chain link fencing where the areas of construction extend beyond the existing security fences. Appropriate signage will be placed on the fences to prevent unauthorized entry into restricted areas and alert the general public of potentially hazardous conditions. Material staging areas and field office trailers will be located within the existing fenced in location adjacent to Allendale Dam on the Mill at Centredale Condominium Association property. Lighting will be provided at night in the trailer and staging location. The North Providence Police Department will be notified of the construction activities and frequent patrol car visits to the office trailer location will be requested. Equipment will be secured within the security fencing at the completion of daily activities. A memorandum will be distributed in the mailbox of the local properties identifying

the work areas to the residents and that children playing on or near the work areas or equipment may result in injury.

3.3 Work Zones

Work zones will be utilized at the Site for control of workers and the public in each of the proposed action areas. Three zones will be identified to reduce chemical exposures to Site workers (employees and contractors), visitors and the general public. These zones will also reduce the potential for contaminant migration. The three zones are listed as follows:

a. Exclusion zone (EZ),
b. Contamination reduction zone (CRZ), and
c. Safe zone (SZ).

Each zone will be identified and set up during the removal activities in each of the proposed action areas. The EZ will be designated with orange construction fencing and the appropriate signs. The EZ includes the work area where soil will be excavated and loaded into a truck for on-site transport to the waste staging area. Any soil stabilization will be performed in the EZ. Personal protective equipment (PPE) for the exclusion zone will be a modified Level D as identified in the Site Specific Health and Safety Plan (HASP) included as Appendix A of this Work Plan.

There will be a combination of dry and wet decons of equipment and vehicles to minimize any airborne material. First, wet and moist soil material that should not become airborne will be scraped and brushed off the equipment in the EZ to minimize the amount of rinse wastewater. This material will be placed into the roll-off container provided for each action area and transported to the material storgae area prior to disposal.

The CRZ will be adjacent to and outside the EZ. It will be utilized for wet decons of equipment and vehicles after they leave the EZ, if necessary. The equipment will be washed either over the roll-off container or in an temporary equipment decon area in the CRZ to remove any material not removed by dry decon in the EZ. Removed sediment and decontamination wastewater will be placed directly into the roll-off container for disposal with the soil and sediment. The CRZ will also be used to decon any hand tools used in the EZ, removal of PPE and disposal of all disposable PPE. Disposable PPE will be placed into the roll-off container for off-site disposal.

The SZ for each of the areas will not be marked. The SZ will be the area outside of the existing or temporary security fencing. The temporary security fencing will be placed at a sufficient

distance (approximately 20 feet) from the edge of the EZ. Air monitoring will be performed along the perimeter of the security fencing to ensure the safety of the public outside of the proposed action areas. Details of the air monitoring program for worker and public safety has been identified in the HASP included as Appendix A of this Work Plan.

3.4 Field Office Trailer and Material Staging Areas

The proposed field office trailer and material staging area will be located within the fenced area of the Mill at Centredale Condominium property adjacent to the Allendale Dam. The fence has a gate suitable for equipment and can be locked at night to prevent access by the public. The proposed trailer and material staging locations are identified on Figure 3-1.

3.4.1 Field Office Trailer

LEA will provide one field office trailer for use by LEA personnel, representatives of the Performing Parties Group, USEPA, RIDEM, and the Army Corps of Engineer's representative. The field office trailer will be on-site throughout the implementation of the NTCRA. The field office trailer will be equipped with electrical and telephone service. The telephone and electrical services will be installed by the local service providers. The trailer will contain two offices and a central meeting space to conduct progress and contractor meetings as necessary. A table and chairs will be provided for the meetings. Each of the offices will be furnished with a desk, chair and phone jack. Emergency telephone numbers including police, fire, ambulance, hospital, poison control center and all appropriate regulatory agencies will be prominently posted near each office telephone.

3.4.2 Equipment Staging Area

Equipment will be staged either in the vicinity of the field office trailer or within the exclusion zone of each of the proposed action areas. Equipment that has completed its use at the Site will be demobilized. Equipment will be locked and a memorandum will be distributed to the local residents warning them of the danger of playing on or around construction equipment.

3.4.3 Construction Material Staging Area

Materials for reconstructing the dam will be staged on the Town Asphalt property adjacent to the location of Allendale Dam. No loaded trucks will be allowed to cross the bridge spanning the river on Allendale Way due to an 8-ton load restriction. Materials will be placed adjacent to the single story steel garage in an area that will not interfere with the Town Asphalt operations. Materials to be utilized for backfill and restoration of each of the action areas along the banks of

the ponds will be delivered to each location. Damage to lawns due to truck tires will be repaired as identified in Section 8.3 – Site Restoration of this Work Plan.

3.4.4 Waste Storage Area

The waste storage location will be located on the Mill at Centredale Condominium property and the Town Asphalt property adjacent to the dam location. Waste storage and storage area requirements will be performed in accordance with Section 4.2 – Waste Storage of this Work Plan and in accordance with the Rhode Island Hazardous Waste Management Act Sections 5 and 9 as described in Section 7 of this Work Plan.

3.5 Transportation Routes

Transportation routes have been designed to prevent as little disruption to residential properties and local traffic. Trucks and equipment will travel between the existing security fence and each of the ponds to the maximum extent practicable. The existing security fence will be removed and replaced as necessary to allow for access to each of the proposed action areas. Trucks carrying waste materials from the action areas will travel on the streets perpendicular to the pond and proceed to the waste storage area along Woonasquatucket Avenue, Route 44 and Waterman Avenue. Any temporary ramps or roads will be placed to allow for trucks to access the action areas from the ends of the perpendicular streets. Proposed locations where temporary ramps or roads will be required to access action areas will be restored to their original condition to the maximum extent prudent. Ramps will be constructed in locations that will require the least disturbance and restoration. Trucks providing material for the construction of the dam will access the Site on Allendale Way from the Johnston side of the River.

3.6 Decontamination Facilities

There will be a combination of dry and wet decontamination of equipment and vehicles to minimize any airborne material. First, wet and moist soil material that should not become airborne will be scraped and brushed off the equipment in the EZ to minimize the amount of rinse wastewater. This material will be placed into roll-off containers provided for each action area and transported to the material storage area prior to disposal.

The CRZ will be adjacent to and outside the EZ. It will be utilized for wet decons of equipment and vehicles after they leave the EZ. The equipment will be washed either over the roll-off container or in a temporary equipment decon pad located in the CRZ to remove any material not removed by dry decon in the EZ. The collected sediment and contaminated rinse water will be

collected and placed into the roll-off container for off-site disposal. The CRZ will also be used to decon any hand tools used in the EZ, removal of PPE and disposal of all disposable PPE. Disposable PPE will be placed into the roll-off container for off-site disposal.

The temporary equipment decontamination pad will be constructed in the CRZ and will consist of a small pool constructed from 10-mil poly sheeting placed over a perimeter of hay bales. Brushes and Liquinox soap will be utilized in the event that the equipment requires decontamination beyond plain water washing. In the event that the wheels or the tracks of the equipment require decontamination in excess of dry decontamination, planks will be placed into the temporary decontamination pad to prevent puncture of the 10-mil liner. Decontamination wastewater will be placed into the roll-off container for disposal off-site.

3.7 Management and Key Personnel

The Performing Parties have selected LEA as the contractor to perform the implementation activities at the Site. LEA in conjunction with LEA's wholly owned Subsidiary, LEA-Cianci, Inc. (LCI) will provide all inspection and construction personnel to implement all of the activities to complete the NTCRA in accordance with the requirements of the UAO and the SOW.

3.7.1 LEA Personnel

LEA will provide a project manager, resident engineer for construction inspection, health and safety personnel, and field personnel to collect and manage the sampling and waste disposal requirements during the implementation phase of the project. All personnel performing work on-site will be trained per OSHA – Hazardous Waste and Emergency Response (Hazwopper, 1910.120) and certificates of training history will be maintained in the field office trailer.

3.7.1.1 Project Manager

The project manager will be responsible for communicating with the designated representatives from the Performing Parties, EPA, RIDEM and USACE. The project manager will attend and chair the progress meetings to be held on-site during the implementation of the NTCRA. The project manager will provide all of the management functions at the LEA office including schedule tracking, financial requirements, contract management, records maintenance, progress reports, overseeing data management, etc. The project manager will available to assist in the correction of any problems that arise and to provide assistance the resident engineer as necessary.

3.7.1.2 Resident Engineer

The resident engineer will be on-site at all times during the implementation activities being conducted on-site. The resident engineer will be the daily contact for site representatives provided by the EPA, RIDEM of the USACE. The resident engineer will be responsible for inspecting the work zones, inspecting the construction activities in accordance with the Construction Quality Control Plan included as Section 10 of this Work Plan. The resident engineer will be responsible for overseeing all daily field activities and communicating progress or problems to the project manager. The resident engineer will assist the project manager with invoices, agendas and minutes from progress meetings.

3.7.1.3 Health and Safety Personnel

LEA will provide a Health and Safety Manager (HSM), Health and Safety Supervisor (HSS), and Health and Safety Officer (HSO) for the project. The HSM and HSS will work primarily from the LEA offices in Plainville, Connecticut. The HSO will most likely be the resident engineer and will be on-site during all implementation activities. The responsibilities of each of the health and safety personnel are described in detail in the HASP attached as Appendix A.

3.7.1.4 Field Personnel

LEA will provide field personnel to conduct all of the soil and waste sampling for the implementation phase of the NTCRA. All LEA personnel are familiar with the proper sampling methods for each media and waste per EPA Method SW-846 and will be made aware of the site-specific sampling procedures. LEA field personnel will also be available to assist the resident engineer with inspection and site supervisory tasks.

3.7.1.5 Laboratory Personnel

LEA will provide laboratory personnel for the analysis of soil samples by the Cape Technologies Immunoassay methods collected during the investigation and confirmatory sample collection events at the Site. Laboratory personnel will also input field information into the database that will be maintained in accordance with Section 5 of this Work Plan.

LEA laboratory personnel have been trained by Cape Technologies on the analytical method and the LEA laboratory will be suitable for the analysis of the samples. A field laboratory has not been proposed for use at the Site.

3.7.2 LCI Personnel

LCI is a civil and remedial construction company with over 30 employees and various types of heavy construction equipment. LCI will provide a site superintendent, equipment operators and laborers to complete the construction activities at the Site that will not be contracted to its subcontractors.

3.8 Potential Subcontractors

3.8.1 LEA Subcontractors

LEA is proposing to utilize its wholly owned subsidiary, LCI, to provide all equipment, materials and labor to complete the construction activities as identified in the 100% Design documents and in accordance with Sections 8 and 9 of this Work Plan. LEA will also subcontract a surveyor licensed in the State of Rhode Island to provide land-surveying activities in accordance with Section 2 of this Work Plan.

LEA will contract with Bennett Environmental, Inc. of Montreal, Quebec for the transportation and disposal of soil and sediment containing dioxin. Bennett will burn the soil and sediment utilizing an incinerator capable of destroying the dioxin and other contaminants contained in the material.

LEA will subcontract with GEI Consultants, Inc. of Winchester, Massachusetts to provide inspection of the Allendale Dam reconstruction. GEI will assist LEA's resident engineer with inspections and provide technical assistance with design interpretation and issues.

3.8.2 LCI Subcontractors

LCI will contract with various material and equipment suppliers to complete the construction activities in accordance with this Work Plan and the 100% Design documents. LCI will subcontract with various materials testing companies in order to comply with the testing requirements identified in the Construction Quality Control Plan included as Section 10 of this Work Plan.

3.9 Financial Reports

Financial reports will be provided by the Performing Parties at a frequency determined after further discussion between the attorneys for the Performing parties and the EPA. Financial reports will identify the expenditures for the implementation activities being conducted to

complete the NTCRA. The format for the financial reports and the level of detail will need to be discussed during the discussions previously mentioned.

4. WASTE MANAGEMENT

Various wastes will be generated during the implementation phase of the NTRCA. These wastes include hazardous soil and sediment excavated from the proposed action areas, dewatering and decontamination wastewater, disposable PPE, debris from clearing and grubbing operations, and debris from the removal of the existing dam structure. This Section of the Work Plan identifies the handling and on-site transportation of waste, the storage of the various wastes, characterization of each waste stream, and the proper methods for transportation and off-site disposal. Each of these tasks will be performed in accordance with the Applicable and Relevant and Appropriate Requirements (ARARs) as identified in Section 7 of this Work Plan. Each ARAR is based on the Federal or State regulations that govern the proper requirements for each of the tasks listed.

4.1 Waste Handling and On-Site Transportation

Material removed from each of the proposed action areas and during the demolition of the existing dam structure will require proper on-site transportation and handling to prevent migration of the contaminants contained in each waste stream from impacting additional areas at the Site.

4.1.1 Hazardous Soil and Sediment

Soil and sediment excavated from the proposed action areas and during the excavation for the reconstruction of the dam will be placed into roll-off containers or lift liners for transport to the hazardous soil and sediment waste storage area. Because some of the soil or sediment may contain free liquids, the excavated material will be stabilized in the excavation of each area utilizing granular lime or similar material as identified in Section 8.2.1 – Soil Stabilization. Once the soil has been stabilized, the soil will be loaded into roll-off containers or 12 ton lift liners. Each roll-off will be provided with 6-mil plastic liners and bowed tarpaulins that completely cover each container preventing precipitation from accumulating on or in the container. The roll-off container must comply with the requirements of the federal regulations 40 CFR 264.170 through 264.178 – Subpart I – Use and Management of Containers and 40 CFR 265.1087 – Subpart CC – Air Emission Standards for Tanks, Surface Impoundments and Containers. Lining and covering each roll-off container at the completion of loading operations will achieve compliance with these regulations. Each roll-off and liftliner will be labelled as hazardous waste and a starting date for loading must be provided on the label. Once loaded,

labelled and the cover secured, the roll-off or liftliner can either be transported to another proposed action area to receive additional soil and sediment or to the waste storage area.

4.1.2 Dewatering and Decontamination Wastewater

During the removal of wastewater from within the cofferdam locations, water confined within the established cofferdams will be pumped directly over the cofferdam careful not to disturb any sediment. Once all of the water has been removed from within the cofferdam, a pump will remain in the cofferdam to remove any water that may infiltrate the area. However, during the excavation and stabilization of the soil, any wastewater generated from the soil will be pumped from the excavation of decontamination pad into closed-top 55-gallon containers. Each 55-gallon drum must comply with the same requirements as the roll-off containers or 40 CFR 265.170 through 265.178 – Subpart I – Use and Management of Containers and 40 CFR 265.1087 – Subpart CC – Air Emission Standards for Tanks, Surface Impoundments and Containers. By closing each drum after liquid is placed into it, labelling and dating each container, compliance with these regulations will be achieved. Each closed, labelled and dated 55-gallon container will be transported to the waste storage area at the completion of implementation activities for the day. No drums, empty or partially full will remain at an action area overnight. Construction methods, stockpiling and sequencing will be implemented to minimize the amount of wastewater generated during the construction activities.

4.1.3 Disposable PPE

Disposable PPE will be placed into the roll-off containers containing soil and sediment for incineration off-site.

4.1.4 Clearing and Grubbing Debris

In the event that areas require clearing and grubbing of larger trees and shrubs in the proposed action areas, the branches and shrubs will be cut down and chipped. The chipped material will be shipped off-site to a local recycle facility. Significant size stumps will be ground to approximately 2 feet below grade and the ground material will be handled and transported with the soil and sediment as described in the Section 4.1.1. Smaller stumps and roots will be excavated and loaded with the soil and sediment.

4.1.5 Debris from Dam Demolition

Soil and sediment from the demolition of the dam will be handled and transported as soil and sediment described in Section 4.1.1. Wood from the dam structure will be segregated in the

excavation area. The wood debris will be chipped and containerized into a lined and tarped roll-off container and transported to the waste storage area.

4.2 Waste Storage

The RI Rules and Regulations for Hazardous Waste Management – Section 5 "Generators" state that if a generator stores hazardous waste on-site for a period not to exceed 90 days, the storage of the waste is considered temporary and the generator is exempt from the storage permit requirements. However, the generator must comply with the federal regulations 40 CFR 262.34 and 264.175. These regulations specify that the generator may accumulate hazardous wastes on-site for 90 days or less provided proper containment, inspection and documentation and identify the use and management of containers required storing the waste.

4.2.1 Hazardous Soil and Sediment

Soil and sediment excavated from the proposed action areas and from the demolition of the existing Allendale Dam structure will be stored in a location adjacent to Allendale Way on the property of the Mill at Allendale Condominium property on the mill side of the former raceway. By complying with the Subparts I and CC, the roll-off containers or lift liners can be stored in the storage area for 90 days or less. LEA has no intention of allowing containers to remain on-site and will make arrangements to have Bennett pick up and transport each container within three working days of its accumulation date. However due to the dioxin contained in the soil and sediment stored in the containers, a containment pad sufficient enough to contain 110% of the waste stored in the storage area must be constructed. The containment requirement is identified in 40 CFR 264.175(d) which states that a storage area that stores containers containing the waste with waste codes of F021, F022, F023, F026 and F027 must have a containment system in accordance with 40 CFR 264.175(b). A containment system, design that meets the requirements of the regulations will be provided and constructed in accordance with the design drawing included on Figure 4-1 or similar.

4.2.2 Dewatering and Decontamination Wastewater

A storage container approximately 8 feet wide by 20 feet long with walls, roof and locking steel doors will be provided for the storage of drums of dewatering and decontamination wastewater. Within the storage container, the drums will be stored on 4 drum spill containment pallets. A 40-mil HDPE liner will be placed on the floor of the storage container in the event that free liquids escape the 4 drum pallet containment. A portable drum trolley will be provided to handle drums in the storage container.

4.2.3 Disposable PPE

Disposable PPE will be stored in drum liner bags prior to depositing each bag into the general trash container.

4.2.4 Clearing Debris

No clearing debris identified as suitable for recycling off-site will be stored on-site. The clearing contractor will transport the wood chips created from the clearing operation directly off-site to a local recycling facility.

4.2.5 Debris from Dam Demolition

Soil and sediment excavated as part of the dam demolition will be handled in the same manner as the soil and sediment excavated from the proposed action areas. Chipped wood and debris will be stored in roll-off containers adjacent to the storage pad to await sampling and characterization for disposal. The roll-off will be labelled as "Demolition Debris - Awaiting Analytical."

4.3 Waste Characterization for Disposal

4.3.1 Hazardous Soil and Sediment

Soil and sediment will not require any further characterization prior to disposal off-site. The analytical data generated from previous site investigations and Time-Critical Removal Actions at the Site will be suitable to profile the soil and sediment for disposal. Soil and sediment that is contained in the roll-off containers or liftliner and stored in the containment area will be transported off-site as soon as possible from the accumulation date. LEA will try to transport each container within three working days from the accumulation date.

4.3.2 Dewatering and Decontamination Wastewater

Four categories of wastewater will be generated as a direct results of the construction activities proposed for the project. The four categories include water removed from proposed action areas prior to excavation, water generated during construction activities that may contain sediment, water removed from within an excavation where all of the contaminated material has been previously excavated, and decontamination wastewater.

Water removed during dewatering prior to excavation will be discharged directly to the river. Water generated from dewatering during excavation will be containerized, and treated with bag filters prior to discharge to the river. Water removed from an excavation determined to meet the

cleanup level, during construction of the dam after all material has been removed for example, will be discharged directly to the river upstream of the cofferdam.

Decontamination water will require off-site disposal. Decontamination fluids for small tools generated from the sampling activities will require containerization into 55-gallon drums, stored temporarily in the storage container and shipped off-site for disposal. Decontamination fluids generated from the buckets of the excavation and handling equipment will be placed directly into the roll-off containers for incineration with the soil and sediment. Currently, a disposal facility for the drummed wastewater has not been identified. Bennett cannot accept water at their facility for disposal.

4.3.3 Disposable PPE

Disposable PPE will be placed into the roll-off containers with the soil and sediment for incineration off-site.

4.3.4 Clearing Debris

Clearing debris will be transported directly off-site for recycling at a local facility without characterization.

4.3.5 Debris from Dam Demolition

Samples from the debris generated from the demolition of the dam will be collected in accordance with the Sampling and Analysis Plan included as Section 6 of this Work Plan.

4.4 Waste Transportation and Disposal

All wastes that are transported from the Site will be transported under Rhode Island Uniform Hazardous Waste Manifest to a facility that complies with the CERCLA Off-Site Rule (40 CFR 300.440). Transportation will be performed in accordance with the RI Rules and Regulations for Hazardous Waste Management – Section 5.03 "Generators-Waste Shipment". The RI regulations state that the material must be accompanied by a properly prepared waste manifest and must be properly packaged. Because the soil and sediment will be transported to Canada, the transportation and disposal of the material must comply with federal regulation 40 CFR 262-Subpart E – Exports of Hazardous Waste.

4.4.1 Hazardous Soil and Sediment

One of the Performance Standards identified in the SOW requires the Performing Parties to incinerate all soil and sediment that contain dioxin with concentrations greater than 1 ppb TEQ. There are two incinerators that accept dioxin contaminated waste for disposal and are both located in Canada. Since the material must be exported for disposal in accordance with the UAO, the transport and disposal must comply with 40 CFR 262 – Subpart E – Export of Hazardous Waste. This Subpart provides the procedures required to properly export waste for disposal including the proper notification to the EPA and Canadian Ministry, the special manifesting requirements, the reporting requirements and record keeping. Bennett has been selected as the disposal vendor that will incinerate the soil and sediment in their incinerator located in St. Ambroise, Quebec. The Performing Parties with the assistance of a representative from Bennett will be responsible for complying with the notification and manifest requirements of the Subpart.

The soil and sediment will be stored in the waste storage area in roll-off containers or liftliners. Bennett will be responsible for transporting each loaded container under manifest to their incinerator for disposal. Certificates of Disposal will be provided by Bennett to confirm that the soil and sediment has been properly disposed. Copies of the certificates of disposal will be provided with copies of the waste manifests for each load in the Completion of Work Report.

4.4.2 Dewatering and Decontamination Wastewater

Drums containing dewatering and decontamination wastewater will require disposal off-site to an incinerator for disposal.

4.4.3 Disposable PPE

Disposable PPE will be placed into the roll-off containers for off-site disposal with the soil and sediment.

4.4.4 Clearing Debris

Clearing debris will be transported directly off-site for recycling at a local facility, Smithfield Peat or similar facility. The material will be removed from the Site on the day that it was accumulated.

4.4.5 Debris from Dam Demolition

Depending upon the results from samples collected to characterize the debris from the demolition of the dam, the debris will be shipped to a local municipal waste landfill as general

trash and debris. If the debris is determined to be contaminated with dioxin, the material will be transported to Canada under the same procedures as the soil and sediment previously described in this Section.

5. DATA MANAGEMENT

This section describes the procedures, personnel, and software to be used for inventory, control, storage, verification, and presentation of data. Geologic, hydrologic, geochemical, physical, and chemical data will be generated during the Site investigation. Availability of this data is critical to making timely field modifications to sampling plans.

This data management plan describes the procedures for communication within the team, focusing on the exchange of information among the field sampling team, data management team, technical task leaders, project managers, and laboratories. It also describes the systems to be used to collect, store, and analyze the project data.

5.1 Data Management Team

The following describes the tasks of the data management team:

Field Data Coordination:

- Logging of incoming data and reports into the central file both on the computer tracking system and hard copy
- Entering and verifying field data and generating reports
- Analytical Data Coordination
- Tracking Chains-of-Custody and field screening results

Data Management:

- Tracking shipment of samples to the off-site laboratory
- Tracking samples and electronic deliverables from the off-site laboratories
- Verifying analytical data from off-site laboratories using appropriate protocols
- Coordinating data preparation, data loading, and data verification for the database; working with project staff to develop schedules for delivery of analytical results
- Entering and verifying data in the database

- Coordinating with technical task leaders to ensure efficient delivery and preservation of data

The Project Manager will provide guidance and oversight for data management activities.

5.2 Field Sample Tracking

Samples collected during the investigations will be designated using the procedure described in the FSP included as Appendix D. In general, sample identification information will include the following:

- Site location
- Date and Time
- Sample matrix
- Sample type
- Sample point number
- Sequential sample number (for multiple depths or times)
- Sample depth interval (where applicable for soil samples)

Field sample tracking activities focus on the timely tracking of information about field samples taken during the implementation acticities. This information includes sample identifiers, chain of custody information, sample station identifiers, sample characteristics, sample locations and milestone dates. This will be transmitted from field to office personnel through the use of daily field summary sheets and other project information tracking forms found in the FSP. Daily field summary sheets will be completed by each field team leader. The daily field summary sheet will detail activities conducted by the staff and contractors, hours logged by staff and contractors, problems encountered, general field observations, and samples submitted for analyses. Field summary sheets and project information tracking forms will be submitted to the field activities coordinator at the end of each working day or as soon thereafter as possible. The summary sheets and forms, in turn, will be placed in the central file.

Field Team Leaders will complete, on a daily basis, a daily log sheet, which at a minimum will detail the people working in a given area, the hours worked, the tasks performed, the number and

matrix of samples collected, and the number of samples shipped for analysis. The daily log sheets will be submitted to the field activities coordinator.

Specifically, field sample tracking includes the following tasks:

- Assignment of sample identification numbers and other sample identifiers to new samples to be taken, and entry to a tracking system
- Production of sample bottle labels from the tracking system
- Completion of Chain-of-Custody forms, and entry of this information to the tracking system
- Entry of additional tracking dates to the tracking system
- Quality Assurance (QA) checking of the sample tracking information, and processing of change requests
- Production of tracking reports and summary sheets, with distribution to appropriate project staff

A computer-based sample-tracking system, based on dBase® outputs, will be used for sample tracking.

5.3 Data Collection

5.3.1 Field Measurements

Field measurements include physical data (e.g., pH, temperature, specific conductance) collected on the Site. Measurements will be recorded in the field and transferred manually from the field data sheets to the Site electronic analytical database, and the data from the database will be verified against the hard-copy data.

5.3.2 On-site Analytical Measurements

Analytical measurements determined at the LEA Laboratory will be reported in either hard-copy or electronic formats and will be sent to the database manager for incorporation into the analytical database. All manually transmitted data will against the hard-copy.

5.3.3 Off-site Analytical Measurements

Off-site analytical measurements will be generated by an off-site analytical laboratory. These analytical results may be delivered in either hard-copy or electronic formats and will be sent to the database manager for incorporation into the analytical database. All manually transmitted data will be verified against hard-copy data.

5.3.4 Survey Data

Surveying of sampling locations and selected site features will be performed as part of the Site in accordance with Section 2 of this Work Plan. All survey information will be included in the geologic/hydrogelogic database the Site and will be used to locate sampling points and other pertinent features on the AutoCAD drawings that are produced as the base maps for the Site.

5.4 Field Sampling Quality Assurance

Several Quality Assurance (QA) samples will be collected to confirm the reliability and validity of the field data gathered during the Site investigation. Duplicate samples will be used to provide a measurement of the consistency of samples from the same sampling station and an estimate of variance and bias. Blanks will be sued to provide a measurement of cross-contamination sources, decontamination efficiency, and other potential errors that can be introduced from sources other than the sample. Specific QA procedures are discussed in the FSP and the QAPP attached as Appendices D and E, respectively.

5.5 Chain-of-Custody

During the implementation activities, samples will be collected for the purpose of defining the presence or absence of contamination in the action areas. For this reason, the possession of samples will be traceable from the time the samples are collected until they are analyzed. Chain-of-Custody procedures are used to maintain and document sample possession from collection through analysis. The following documents identify samples and document possession:

- Sample labels
- Chain-of-Custody record forms
- Field notebooks

The field sampler will be responsible for the care and custody of the samples collected until they are transferred or shipped under the Chain-of-Custody procedures. Specific Chain-of-Custody procedures are described in the FSP and the QAPP.

5.6 Analytical Database Repository

The electronic analytical database will be maintained in a dBase® format. The database management functions are described in the following paragraphs.

5.6.1 Database Administration

Database administration includes coordination of data entry and verification, and review of data for completeness and correctness. The database manager will interface with the project manager, task leaders, and field personnel to ensure that the database meets the project objectives.

5.6.2 Electronic Data Entry

Data received from off-site analytical laboratories in electronic format will be checked for completeness by comparing data received with data analyses requested in the Chain-of-Custody form. Electronics disks will be logged in, checked to see that the files received match the transmittal paperwork, copied, and archived in the project files.

The electronic data files will be downloaded into temporary database files; this download process will be conducted primarily by the database manager. The downloaded data will be loaded into the analytical database and flagged as “not verified” for review by the technical staff.

All of the results received in electronic format will be compared with paper copies of the original lab data sheets. In addition, the sample identification number, location, constituent, and qualifier codes will be verified. Upon completion of electronic data verification, the verified files in the

electronic database will be subjected to the same verification procedures as the unverified electronic data files received from the analytical laboratories.

5.6.3 Manual Data Entry

Manual data entry will be performed for the analytical data and physical data not received in electronic format. The unverified data will be manually entered into the analytical database with results marked as "not verified". Following data verification, the electronic data will be flagged as "verified."

Verification of manually entered data will be performed using the following procedures:

- A listing will be produced of data entered to serve as a checkprint.
- Each record entered into the database will be compared to original coded sheets; correct values will be highlighted, and incorrect values will be marked with revisions in red. The first page of each data listing will be signed and dated by the person completing the comparison.
- Corrections will be made to the database.
- Listings will be produced of data corrected, and the comparison will be repeated (only to corrected values). This procedure will be repeated until corrections are completed.
- Temporary files will be converted to final files.

5.6.4 Archiving of Data

Archiving of the electronic project database will be routinely accomplished. Data will be backed up on a no-more-than weekly base. Data also will be backed up at the conclusion of the project. The permanent archive for the analytical and geological/hydrogical data will be the hardcopy files maintained by LEA.

5.7 Data Validation

An initial review of data obtained from field measurements will be performed by the Field Task Leader. This review will consist of checking procedures utilized in the field, ensuring that field measurement instruments were properly calibrated, verifying the accuracy of transcriptions, and

comparing data obtained in the field to historic measurements. An independent review of these parameters will be provided by a qualified person who was not involved with the field task.

An internal review of analytical data will be the responsibility of laboratory personnel. The analyst will initiate the data review process by examining and accepting the data. The completed data package will then be reviewed by the data reviewer. The data reviewer will provide a technical review for accuracy and precision according to the methods employed and laboratory protocols. The data package will also be reviewed for completeness (i.e., all pertinent information is included, all appropriate forms are signed and dated, calculations are correct, and holding times and QC sample acceptance criteria have been met. A final review of the data will be provided by the Project Manager to ensure that the data package meets the projects specifications.

An independent validation of the data will be provided by an impartial contractor that has not been determined at this time. The basis of the review will be USEPA Contract Laboratory Program National Functional Guidelines for Organic Data Review (EPA-504/R-94/102) and USEPA Contract Laboratory Program National Functional Guidelines for Inorganic Data Review (EPA-504/R-94-013). Data validation specifics are discussed in the QAPP attached as Appendix E to this Work Plan.

5.8 Data Presentation

The objective of data presentation is to illustrate the analytical and geological/hydrogeological data for the Site in formats that facilitate data interpretation and visualization. These formats may include both tables and figures, as appropriate.

5.8.1 Analytical Data Presentation

Two types of analytical data presentation will be provided: *final tables* that will be generated in a format designed for inclusion in the CWR, and *working tables* that will be generated for specific uses by the technical task leaders, project manager, and other project personnel. All requests for data output will be submitted to the data manager in a written format, with clear instructions as to the type of output requested.

Examples of tables to be created include:

- Appendix-style (tabular listings sorted by location and sample ID)
- Summary of detected values to be included in the final characterization report.
- Site information including measurements of water-table elevation and sample/station location coordinates.
- Analytical data including constituents of concern, analyte concentrations, and qualifiers

5.8.2 Site Drawings

Site drawings will be created using AutoCAD software. The project base drawing was generated using available information from a variety of sources that has been incorporated into the AutoCAD files.

5.8.3 Graphical Data Display

Graphical data display will combine analytical data and/or geological/hydrogeological data with information from the facility base map.

Examples of possible graphical outputs include:

- Groundwater potentiometric surface contours
- Areal distribution of containment concentrations in soil and groundwater
- Cross-sections of stratigraphy, water-table elevations, or vertical and horizontal distribution of containment concentrations

5.9 File Organization

Files for original analytical data obtained during the implementation activities will be maintained. Incoming data will be logged into the central file both on the project analytical database and on hardcopy and then will be appropriately placed in the central file. Analytical results from the laboratories will be keyed to the sample identification numbers assigned during sample collection. Team members will work from copies of incoming documents; the original

documents will be kept in the central files. Field log books also will be kept as part of the central file and considered to be original documents.

Original field notebooks, log sheets, and other information will be transferred from the central file to a designated archive location upon the completion of the project. Chemical and physical data generated during the implementation activities will be stored in paper document form. Computerized data will be stored in both hard-copy and electronic back up formats.

5.10 EPA Electronic Data Submissions

Periodically, electronic data will be submitted to the EPA in accordance with the NTCRA SOW. The data will be in a format compatible with the existing site-specific database of the EPA. Data tables and fields of the EPA's site-specific database are presented in Table 6-1 and 6-2, respectively.

6. SAMPLING AND ANALYSIS PLAN

The Sampling and Analysis Plan (SAP) has been prepared to meet the objectives identified in the SOW. The SAP has been prepared to communicate LEA's field objectives and activities during the investigation to determine the approximate boundaries of the proposed action areas and to confirm that all soil containing dioxin greater than 1 ppb TEQ has been adequately removed from each of the proposed action areas. The SAP is composed of two separate plans, the Field Sampling Plan (FSP) and the Quality Assurance Project Plan (QAPP). Summaries of both of the plans have been provided below. The FSP and the QAPP have been bound separately and attached to this Work Plan as Appendices D & E, respectively.

6.1 Field Sampling Plan

The FSP, included as Appendix C of this Work Plan, has been written detailing the site-specific sampling and data gathering methods for the NTCRA. In summary, the FSP identifies the sampling objectives for excavation delineation and confirmatory samples including the locations, analytes, frequency, sample designation, equipment, standard operationg procedures (SOPs), handling and analysis. Figures of each of the proposed action areas are included in the FSP.

6.2 Quality Assurance Project Plan

The QAPP for the NTCRA, attached to this Work Plan as Appendix D, has been written in compliance with the EPA Guidance for Quality Assurance Project Plans, July 1998 and the EPA Requirements for Quality Assurance Project Plans for Environmental Data Operations, October 1998. The QAPP has been provided to communicate the project management, measurement and data acquisition, assessment, oversight and data validation and usability elements to be implemented for all sampling and analytical activities for the NTCRA. The QAPP also specifies the QA/QC requirements and procedures to be adhered to by the laboratory selected to analyze samples identified for fixed laboratory analysis. Screening samples analyzed by Cape Technologies' immunoassay test method will be used for determining the approximate limits of an excavation in the proposed action areas identified in detail in the FSP and for screening confirmatory sidewall samples prior to shipment to the fixed laboratory for analysis. Limited QA/QC procedures and procedures have been included as part of this QAPP.

7. APPLICABLE OR RELEVANT AND APPROPRIATE REQUIREMENTS

All activities for the completion of the work identified in the SOW shall be performed in accordance with all applicable and relevant and appropriate requirements (ARARs) as identified in the federal and state regulations as they relate to this project. The Action Memorandum identifies many of the requirements that apply to activities to be performed under the NTCRA. Table 7-1 has been prepared to summarize the ARARS and a detailed discussion of how each of the ARARs will be attained has been provided in the following paragraphs.

7.1 Protection of Wetlands and Freshwater Wetlands Act

The ARARs for the protection of wetlands as identified in the Action Memorandum include 40 CFR 6.302(a) and 40 CFR 6, Appendix A. The ARAR associated with the Freshwater Wetlands Act are RI General Laws – Rule #10, Protection of Wetlands Functions and Values. In summary, the regulations state that construction should be avoided in wetlands unless there is no practicable alternative. In addition, the proposed activities should minimize harm to the wetlands to the maximum extent practicable. Because the soil and sediment containing dioxin with concentration greater than 1 ppb TEQ exist in the wetland and associated buffer zones, the is no alternative to removing the material. LEA will provide soil erosion and sediment controls in accordance with the RI Soil Erosion and Sediment Control Handbook and as identified in the 100% Design documents to minimize any potential erosion that may impact the wetlands further. In addition, LEA will disturb the least amount of area within the wetland and associated buffer to complete the removal activities. Restoration of the proposed action areas will be completed immediately upon confirmation that all material containing greater than 1 ppb TEQ dioxin is removed.

7.2 Floodplain Management

The ARARs for floodplain management as identified in the Action Memorandum include 40 CFR 6.302(b) and 40 CFR 6, Appendix A. As stated in the previous paragraph, the soil and sediment containing dioxin with concentration greater than 1 ppb TEQ exist in the floodplain and there is no alternative to removing the material. LEA will disturb the least amount of area within the floodplain to complete the removal activities and restoration of the proposed action areas will be completed as soon as possible.

7.3 Rivers and Harbors Act

The Rivers and Harbors Act is a regulation set forth by the USACE identifying the requirements for the placement of a dam or structure with the navigable waters of the United States. LEA has provided in the 100% design document a modified design of a previous USACE dam design that has incorporated the criteria requirements in the design.

7.4 Clean Water Act

The ARAR associated with the Clean Water Act as identified in the Action Memorandum is Section 404(b)(1) that provides guidelines for the placement of dredged or fill material into surface waters. LEA will be placing clean fill into the excavations of the proposed action areas upon confirmation that all of the soil and sediment containing dioxin has been removed. Because the SOW requires the Performing Parties to restore the Site to its previous elevation, fill will be placed into an area that will be inundated with surface water with the restoration of Allendale Dam or into a dewatered excavation on the bank of Lymansville Pond. Placement of the fill will be performed to minimize the impacts to the surface water by maintaining a low water level in Allendale Pond during the removal activities and maintaining a barrier between the excavation and the surface waters associated with Lymansville pond during backfilling operations.

7.5 Hazardous Waste Management

The ARARs for Hazardous Waste Management identified in this paragraph apply to the storage, identification, labelling, and shipment of hazardous waste by a generator. The RI Rules and Regulations for Hazardous Waste Management – Section 5.00 "Generators" identifies the requirements and procedures and incorporates multiple federal regulations including;

- 40 CFR 265.170 through 265.178 – Subpart I – Use and Management of Containers,
- 40 CFR 265.1087 – Subpart CC – Air Emission Standards for Tanks, Surface Impoundments and Containers,
- 40 CFR 262 – Subpart E – Export of Hazardous Waste,

The methods and procedures for proper containerization, labelling, reporting, storage, inspection, transport and disposal to comply these regulations have been previously discussed in Section 4 – Waste Management of this Work Plan.

7.6 RI Remediation Regulations

The RI Remediation Regulations are applicable for determining that all soil and sediment with concentrations of compounds at unacceptable human health risk has been remediated at the Site. In this case, dioxin is the single contaminant of concern that will determine whether the extent of remedial excavation based on its proportionately low health risk concentration relative to other contaminants found at the Site. Soil containing greater than 1 ppb TEQ of dioxin (in TEQs) will be excavated and disposed from the Site.

7.7 RI Air Pollution Control Regulation #5, Fugitive Dust

The fugitive dust regulation is designed to control or prevent the release of airborne particles caused by earth moving operations. Because of the soil and sediment's proximity to wetlands, the soil and sediment excavated should have a moderate moisture content that will minimize the amount of dust generated during excavation operations. Field personnel and drivers will remove any soil from the tires of the trucks moving roll-off containers, lift-liners or equipment prior to exiting the exclusion and contaminant reduction zones before travelling onto public roadways. Section 3.6 of this Work Plan identifies the decontamination procedures that will be required for all equipment and personnel at the Site.

In addition, the HASP specifies decon to remove contaminated soil from vehicles and equipment. They will then be inspected in the CRZ after decon to assure that they don't track soil onto highways. There will also be watering and/or chemical control of surfaces on site to help prevent dust from getting on the highways. In the event that dust gets on the highway, wet sweeping can be used to clean it up.

8. SOIL AND SEDIMENT REMOVAL ACTIVITIES

This Section of the Work Plan details the methods and procedures that will be performed to excavate and dispose of the soil and sediment that contain dioxin at a concentration greater than 1 ppb TEQ at the Site. A 100% Design document for Soil and Sediment Removal has been written that specify materials and equipment to be used for the removal activities. The Soil and Sediment Removal Specifications and Drawings have been included as Appendix E.

8.1 Site Preparation and Mobilization

At the completion of the field sampling activities and immunoassay sample screening, LEA and LCI will prepare to mobilize to the Site to begin excavating soil and sediment for off-site disposal. LCI will mobilize a small excavator, backhoe/loader and dump truck to begin the excavation activities. A roll-off will be provided by LCI or a local contractor to move roll-off containers around the Site and to the waste storage area. Drum handling equipment will be provided.

8.1.1 Roll-off Containment Pad

A roll-off containment area will be constructed to contain a maximum of 4 roll-off containers or 8 liftliners prior to shipment off-site for disposal. The containment pad shall be constructed in accordance with the detail provided on Figure 4-1 of this Work Plan. A covering liner and air-filled pillow will be utilized to cover the containment area to avoid collecting precipitation in the containment area. Precipitation that collects in the containment area despite the cover system will be allowed to evaporate from the sump.

8.1.2 Excavation Area Layout

Prior to the collection of soil samples to determine the limits of the excavations in the proposed action areas, a surveyor licensed in the State of Rhode Island will locate and mark the location of the samples containing dioxin greater than 1 ppb TEQ. The surveyor will also mark the elevation of the 10-year flood boundary, the 93.5 and 92.5 contour for the action areas associated with Allendale Pond, and the elevation in Lymansville Pond that corresponds with an elevation 1-foot below the crest of the dam that controls the water elevation. The surveyor will confirm the lowest elevation of the spillway prior to identifying the lower excavation limit in the proposed action areas associated with Lymansville Pond.

Based on the immunoassay screening results, the approximate boundaries of each excavation in the action areas will be flagged by LEA field personnel. The boundaries will be determined by sample locations where immunoassay results are less than or equal to 500 parts per trillion (ppt) or a negative screening result. Figures identifying the initial limits of excavation will be produced and submitted to the EPA for use as tools to communicate the excavation activities to each of the respective property owners.

8.1.3 Fence Dismantling

In the event that the excavation boundaries in each of the action areas extends beyond the security fence installed during a previous Time-Critical Removal Action, the fence will be dismantled and stored in the vicinity of the action area. Chain link fence fabric will be rolled and fence posts will be pulled sufficient distance to allow for movement of equipment and personnel. Fence posts located in the excavation area will be cut flush with the concrete securing the post in the ground. The concrete will be removed and disposed with the soil and sediment to be excavated. Temporary chain link fencing will be installed to protect the work area from the public. Signs will be posted on the temporary fence warning the public of the danger within the work area.

8.1.4 Soil Erosion and Sediment Control

Soil erosion and sediment controls will be installed in accordance with the Soil and Sediment Removal Specifications and Drawings and the RI Soil Erosion and Sediment Control Handbook. Silt fence and hay bales will be installed as identified on the drawings and will be maintained until a suitable stand of grass has been established in the restored areas or the level of each pond is restored. Hay bales will be placed along the restored water elevation to prevent topsoil and fill from eroding into the restored pond for areas excavated above the restored water line.

8.1.5 Clearing and Grubbing

Trees located within the boundaries of the excavation in each of the proposed action areas will be cleared to the ground surface. Chipped material and trunk wood will be removed from the Site for recycling at a local facility, Smithfield Peat or similar. The remaining stumps will be ground in-place to a depth of 2 feet below grade and chips from the grinding activities will be excavated with the soil and sediment for off-site disposal. Owners of each of the properties containing trees to be cleared will be notified at a minimum of seven days prior to the clearing activities.

8.1.6 Clearing Areas to be Inundated by Restored Pond

As directed in the UAO and identified in the Action Memorandum, trees and shrubs that have grown in the sediment of the former Allendale Pond will require clearing prior to restoring the water elevation. The surveyor will be required to layout the 93.5 elevation along the perimeter of the pond to identify the limits of trees requiring clearing. Clearing of these trees will prevent sediment from being stirred into the water when the trees overturn as they become inundated with the elevated water surface.

8.1.7 Cofferdams

Coffer dams will be required to isolate the excavation areas within the proposed action areas associated with Lymansville Pond. The coffer dams will consist of concrete barriers, plastic sheeting and sand bags placed sufficiently beyond the proposed excavation limits. The cofferdam will be installed to prevent as much water from entering the excavation area. Dewatering of the areas within the cofferdams is discussed in Section 8.2.1.

8.2 Site Excavation

This section summarizes the tasks require to complete the excavation of soil and sediment in accordance with the specifications and action area figures provided in the FSP.

8.2.1 Dewatering

Based on the current elevation of the water in Allendale Pond, minimal dewatering will be required to excavate soil from the proposed action areas associated with this pond. However, because the elevation of the water is relatively fixed in Lymansville Pond, coffer dams and dewatering will be required to excavate sediment that contains dioxin greater than 1 ppb TEQ to an elevation 1-foot below the crest of the dam. In most cases, the cofferdam will be constructed from 3-foot by 2.5-foot by 5-foot concrete blocks, polyethylene sheeting and sandbags. Once the cofferdam for each area is completed, a sump will be created by placing a layer of stone at the lowest elevation within the cofferdam and a sump pump placed on or within the stone. The water will be pumped over the cofferdam back into the pond.

8.2.2 Soil Stabilization

In the event that the sediment and soil contains visible free liquids or moisture exceeding the paint filter test, lime will be added to the sediment or soil within the excavation to stabilize the material for excavation and transport. Granular lime or similar material will be mixed into the soil with the excavator as it is being excavated or into a stockpile created within the limits of the excavation. Additional lime may be added to the soil once it has been loaded into roll-off

containers or liftliners for storage and transport. In the event that the lime or similar amterial causes vapor that may contain dioxin, an organic material will be used to absorb water. This organic material may include sawdust or similar organic material.

8.2.3 Soil Excavation

Soil will be excavated from within the marked excavation boundary either into a stockpile within the limits of the excavation or directly into roll-off containers or liftliners. An excavator with a grade bucket will be used to remove the soil to the specified depth. The excavator will excavate each excavation area in a method that will minimize contact of the tires or tracks reducing the need for decontamination. In addition, soil and sediment will be excavated to minimize the impact to the wetlands and floodplain. Excavation activities will be performed to prevent the release of fugitive dust. In the event that the material becomes to dusty to excavate, water will be applied to the soil to prevent fugitive dust.

In the event that confirmatory sidewall samples identify additional excavation is required, a 3-foot cut or the width of an excavator bucket, whichever is greater, will be removed from the sidewall to the elevation specified. In the event that the excavation bottom requires additional excavation, a 6-inch layer of soil and sediment will be removed to the specified limits.

8.2.4 Confirmatory Sidewall and Bottom Sampling

Confirmatory sidewall and excavation bottom samples will be collected at the completion of excavation to the identified limits. Samples will be collected in accordance with the Field Sampling Plan included as Appendix C to this Work Plan. Samples will be screened utilizing the Cape Technologies immunoassay method to determine whether the samples should be forwarded to the fixed laboratory for analysis. QA/QC procedures and analytical methods and controls shall be in accordance with the Quality Assurance Project Plan attached as Appendix D to this Work Plan.

8.2.5 On-Site Soil and Sediment Transport

Soil and sediment excavated from each of the action areas will be placed into lined roll-off containers or liftliners. Full containers will be transported to the waste storage area on a roll-off container. Roll-off containers and liftliners with additional capacity will be transported to additional action area to receive soil and sediment to its weight capacity. A roll-off container will be loaded with approximately 15 yards of material equalling an estimated weight of approximately 22 tons. A liftliner will be loaded with approximately 8 yards or 12 tons of

material. The roll-off container truck has a gauge to determine the approximate weight of each roll-off before removing it from each action area. Roll-off containers, liftliners and their transport will be in accordance with the ARARs identified in Section 7 of this Work Plan.

8.2.6 Soil and Sediment Storage

Full roll-off containers and liftliners will be transported to the Roll-off containment pad for storage prior to transport from the Site. LEA will schedule excavation and disposal schedules to minimize the number of roll-off containers and liftliners that will be stored on-site (a maximum of 4 roll-offs) and the number of days a roll-off is on-site from the accumulation date to transport for disposal. LEA will coordinate with Bennett so that no roll-off container or liftliners is stored on-site from its accumulation date for greater than three working days. Storage of the roll-off containers will be in accordance with the ARARs identified in Section 7 of this Work Plan.

8.2.7 Soil and Sediment Transportation and Disposal

Soil and sediment will be transported to an incinerator in St. Ambroise, Quebec operated by Bennett Environmental, Inc. Soil and sediment shall be transported under RI Uniform Hazardous Waste Manifest and Canadian manifest and shall be in accordance with the ARARs for transport, manifesting, notification and export identified in Section 7 of this Work Plan.

8.3 Site Restoration

Site restoration will be conducted immediately after confirmation has been received that all of the soil and sediment that contains greater than 1 ppb TEQ in the proposed action areas has been removed and no additional removals are required. Restoration will consist of backfill and vegetation as described in the following paragraphs.

8.3.1 Backfill

Each of the excavations in the proposed action areas will be backfilled with bank run gravel to approximately 4 inches below the finish grade prior to the excavation activities. Backfill specifications are identified in the Soil and Sediment Removal Specifications attached as Appendix E to this Work Plan. Backfill will be compacted with the bucket of the loader or with the wheels or tracks of the equipment placing the material. No compaction testing will be required.

8.3.2 Topsoil

A layer of approximately 4 inches of topsoil will be backfilled into each of the excavations. Topsoil specifications are identified in the Soil and Sediment Removal Specifications attached as Appendix E to this Work Plan. Topsoil will also be placed on area of lawn or yard that require repair from equipment and truck traffic. Topsoil will be racked to meet the grade prior to removal activities.

8.3.3 Seed and Mulch

Hydroseed will be applied to the topsoil at each of the excavations and where topsoil was placed for yard repair. Hydroseed specifications are identified in the Soil and Sediment Removal Specifications attached as Appendix E to this Work Plan. The hydroseed will be monitored and repaired until a suitable stand of growth has been established.

8.3.4 Tree and Shrub Restoration

Discussion with the owners of each property where trees and shrubs were removed will be performed at a minimum of seven days prior to the start of clearing operations. During these discussions, LEA will discuss the replacement of each tree or shrub removed with a similar species of tree. Trees and shrubs will be provided in up to 5-gallon container sizes depending upon the species of tree unless previously negotiated. Trees and shrubs will not be replanted in excavation areas that will be inundated with a restored water surface.

8.3.5 Fence Restoration

During the preliminary discussion with property owners, a determination will be made whether the security fence along the perimeter of their property will be replaced or removed completely. The EPA has stated that it is the property owner's decision whether the fence need sreplacement or removal once the excavation area has been restored.

9. DAM RESTORATION ACTIVITIES

This Section of the Work Plan details the methods and procedures that will be performed to reconstruct the Allendale Dam and restore the water to its elevation before the breach occurred in 1991. A 100% Design document for the reconstruction of the dam has been written that specify materials and equipment to be used for the removal activities. The Allendale Dam Reconstruction Specifications and Drawings (dam specifications) have been included as Appendix F to this Work Plan.

9.1 Site Preparation

The first action that will need to take place in the sequence to reconstruct the dam is the refurbishment of the existing concrete gate structure. Clearing of the construction area can be performed concurrently with the gate structure refurbishment with the cofferdam installation and excavation layout at its completion.

9.1.1 Gate Structure

The gate structure currently consists of a broken stop log mechanism that has been plugged with debris and sediment. The concrete structure is in acceptable condition for internal mechanism replacement. Prior to the start of any site preparation or construction activities, this gate structure will need to be refurbished to allow for the adjustment of water to protect the proposed cofferdams and construction activities. A concrete pad exists upstream of the gate structure. A temporary berm of concrete blocks and sandbags will be installed to prevent water from passing into the gate structure. The gate structure will be dewatered and maintained free from water to allow for its refurbishment. The existing gate mechanism will be removed and modifications to the concrete will be provided based upon the selected gate mechanism chosen. A mechanically operated gate mechanism that allows for the adjustment of the water level in Allendale Pond will be provided. The specifications indicate that a mechanism will need to be submitted for engineer approval. Once the gate mechanism is installed and inspected for proper operation, the gate mechanism will be locked into a fully open position and the temporary concrete and sandbag berm will be adjusted. The temporary berm will be lowered to allow for water to flow over the berm into the gate structure at a specific elevation while preventing sediment from passing through the gate structure. Elevations and details of the proposed berms are included in the Dam Reconstruction Specifications attached as Appendix F to this Work Plan.

In the event that the lead-time for the delivery of the gate structure impacts the construction of the cofferdam used to protect the construction area, a temporary stop log system will be installed to prevent construction delays. Discussions with gate mechanism providers indicate that the gate mechanism may not be available for 6 to 8 weeks from placement of the initial order. The temporary stop log mechanism would be required to stop water from entering the gate structure during the installation of the permanent gate mechanism after the dam has been reconstructed. The temporary gate structure would be fabricated from pressure treated timbers and temporary lag bolts. Timber lagged to the concrete gate structure will remain in place in the event that repairs are needed to be made to the permanent gate structure. The timbers to be used as stop logs will be disposed off-site as debris and handled, transported and disposed in accordance with the debris section of this Work Plan.

9.1.2 Clearing

Clearing of the area required to complete the reconstruction of the dam will be performed at the beginning of the project in conjunction with clearing the perimeter of the Allendale Pond and any known areas where removal activities or brush and trees will be required. Clearing will consist of removing trees and shrubs flush wit the existing grade. No stumps or root systems will be removed as part of this work unless the stump or root system will impede construction activities. In that event, the stump will be ground in place to 18-inches below grade and the chips generated from the grinding operation will be left in place. The removed trees and shrubs will be chipped on-site and removed to a local recycling facility for disposal. The transportation, storage and disposal of clearing debris are discussed in Section 4 of this Work Plan.

9.1.3 Access Roads

An access road to the construction area will be installed utilizing imported fill and compacted to sustain heavy vehicle traffic. The access road for the construction area will be provided from the Town Asphalt property to the downstream side of the proposed dam. Material used for the access road will be removed from the area and placed in front of the dam to the proposed final grades.

9.1.4 Cofferdam

At the completion of the gate structure refurbishment, a soil and concrete block cofferdam will be placed upstream and downstream of the proposed dam location. The cofferdams are intended to prevent water from entering the construction area during the reconstruction activities. The cofferdams will be installed sufficiently upstream and downstream to allow for material that

currently underlies the proposed dam location to be safely excavated and allow for equipment movement within the work area. Specific dimensions and elevations for the cofferdams area identified in the design drawings included in Appendix F.

9.1.5 Excavation Layout

The limits of excavation for installation of the footing for the proposed dam will be identified immediately upon the completion of the cofferdam installation. The area will be located in the field using tape rules from specific existing features that will be incorporated into the proposed design. The limits of the excavation will be identified with oak stakes or similar marking material.

9.2 Demolition

9.2.1 Existing Dam Removal

To provide a clear working area on the surface of the bedrock, a portion of the wooden frame structure that continues downstream of the existing dam may need to be removed in order to install the forms and footing of the proposed dam. In addition, a portion of the top of the existing dam will be removed for approximately 2 feet below the proposed final grade in front of the reconstructed dam. Removed components will be disposed in accordance with Section 4 of this Work Plan. Specific quantities and dimensions of the structure requiring demolition will be determined in the field.

9.2.2 Granite Wall

In order to provide a sound connection between the proposed dam and the existing embankment, a portion of the granite wall will be removed as part of the construction. The granite block and stone will be removed and stored on-site for reuse as part of the new dam structure. Soil removed from the embankment will be stockpiled on the Town Asphalt property on plastic, covered with plastic for reuse as fill in front of the proposed dam structure. It is assumed that this material has not contacted contaminated sediment, however, characterization samples will be collected in accordance with the Field Sampling Plan included as Appendix C of this Work Plan. Details for the connection of the existing embankment and the proposed structure are provided on the design drawings.

9.3 Reconstruction

Reconstruction of the proposed dam structure will be provided in accordance with the design specifications and drawings attached as appendix F to this Work Plan. The dam consists of a cast-in-place concrete structure anchored to the existing bedrock surface that underlies the existing dam location. The location of the proposed dam will be approximately 5 feet downstream of the existing breached structure. The existing concrete gate structure will be refurbished as previously discussed and utilized as a component of the proposed dam structure.

9.3.1 Dewatering

Dewatering will be required in the event of a storm or to remove seepage that may circumvent the cofferdams. A sump of silt fence and stone will be utilized to collect water for removal from the excavation. A detail of the sump has been provided on the design drawings. Water that collects in the sump will be pumped over the cofferdam to maintain a working area free from water.

9.3.2 Soil and Sediment Excavation

At the completion of the cofferdams, soil and sediment that will require removal will be identified in the field with oak stakes or similar marker. The soil and sediment will be excavated to the center of the proposed excavation area where it will be stockpiled to allow the material to free drain. Soil and sediment that does not contain free liquids will be removed from the excavation area and placed into roll-off containers or liftliners. Roll-off and liftliner transportation, storage and disposal will be provided in accordance with Section 4 of this Work Plan.

9.3.3 Dam Reconstruction

The dam reconstruction will begin with the visual inspection of the bedrock surface and a core of the bedrock mass to determine the conditions of the rock and the adequacy of the rock anchors specified in the design documents. The rock anchors will be installed and the base or footing of the proposed structure will be cast-in-place concrete to a minimum thickness of two feet depending upon the variability of the bedrock surface. The dam retaining wall of the dam will be placed on the footing and a finished surface on the downstream face of the wall will be provided. A granite cap and the use of the granite from the embankment will be used to complete the structure. Construction methods, specifications and drawings are attached in Appendix F. The Dam Basis for Design Report has been attached as Appendix H of this Work Plan.

9.3.4 Fish Ladder

Considerations for the installation of a future fish ladder have been made in the design of the dam. The US Fish and Wildlife Service has be contacted concerning the design of the fish ladder. The most probable location of the fish ladder will be within the left abutment looking downstream. A detailed discussion of the fish ladder is provided in the basis of design report attached to this Work Plan as Appendix H.

9.3.5 Soil Backfill

Flowable fill will be provided between the existing and the new dam structures. The flowable fill will be provided to the depths specified in the design drawings. Clean fill from the embankment, the gravel used to install the access road and the fill from the cofferdam will be utilized as necessary to backfill to the proposed grades. Specifications for fill is provided in the specifications.

9.4 Site Restoration

9.4.1 Topsoil

A layer of approximately 4 inches of topsoil will be placed on the gravel backfill placed to final grades. Topsoil specifications are identified in the Soil and Sediment Removal Specifications attached as Appendix E to this Work Plan. Temporary erosion control matting may be required to stabilize the topsoil until a suitable stand of vegetation is established.

9.4.2 Seed and Mulch

Hydroseed will be applied to the topsoil. Hydroseed specifications are identified in the Soil and Sediment Removal Specifications attached as Appendix E to this Work Plan. The hydroseed will be monitored and repaired until a suitable stand of growth has been established.

9.5 As-Built Survey

An as-built survey will be provided in accordance with Section 2 of this Work Plan. Major features of the restoration and construction will be identified in the survey.

9.6 Operation and Maintenance

Operation and maintenance of the dam and gate structure will be provided by the Respondents. The specifics of the maintenance has been discussed in Section 15 – Institutional Controls Plan of this Work Plan.

10. CONSTRUCTION QUALITY CONTROL

The purpose of the Construction Quality Control (CQC) system is to establish and maintain an effective quality control system consisting of plans, procedures and a QC organization necessary to complete the construction consistent with the 100% Design documents and the SOW. The 100% design documents designate the requirements for submittals, material testing and construction inspection for each construction task. This CQC has been prepared in accordance with the CQC requirements outlined in the specifications provided by the USACE for the Reconstruction of Allendale Dam, 1995.

10.1 Quality Control Organization and Personnel

The quality control organization for the project will consist of personnel in the field and in the offices of LEA and GEI. On-site quality control inspection will be provided by an LEA site superintendent, a on-site inspector from the design contractor GEI, and the superintendents for any subcontractor performing work at the Site. The on-site personnel will be responsible for performing the three phases of quality control identified in the following paragraphs.

Off-site personnel including the project managers for both LEA and GEI will be responsible for final review and approval of submittals, maintaining the proper QC documentation, and providing support in the event that any deficiencies or inconsistencies are identified and require correction. Project managers will be present at weekly QC and construction progress meetings as well as the pre-final and final inspections.

10.2 Quality Control Phases

Quality control for the project will be provided in three phases, the preparatory phase, the initial phase, and the follow-up phase. Each of these phases will be reviewed for each construction task in the weekly dam reconstruction meetings and will be documented in the minutes of each meeting.

10.2.1 Preparatory Phase

The preparatory phase of QC for each task will be performed to provide sufficient time to correct or complete any of the submissions or testing required before starting each construction task. The preparatory phase QC consists of reviewing specifications and drawings, submittals and test reports, inspection requirements, on-site material or equipment, job hazard analysis, special construction methods, completion of prerequisite tasks, and schedule of each task. A Preparatory

Phase Inspection Checklist has been prepared and included as Figure 10-1 of this Work Plan. A Job Hazard Analysis Form has been included as Figure 10-4 of this Work Plan.

10.2.2 Initial Phase

The initial phase inspection will be conducted at the start of each task of the work to be completed. The initial phase inspection will identify the inspector for each task, a review of the Preparatory Phase Inspection Checklist for each task, resolution of any discrepancies or conflicts, and review safety measures established in the Job Hazard Analysis.

10.2.3 Follow Up Phase

The follow-up phase of the QC will be conducted on a daily basis. This phase ensures that the work is being tested and completed in accordance with the plans and specifications and any specific requirements identified in the previous QC inspections and coordination meetings.

10.3 Submittal Review

Submittal requirements and procedures for each task are identified in each of the 100% Design documents in Section 01300 – Submittals. The specification section identifies the submittal format, quantity of copies, and actions identified from reviewing engineer. Table 10-1 provides a list of all of the Submittals and Testing Requirements required by the 100% Design document - Allendale Dam Reconstruction Specifications and Drawings included as Appendix F to this Work Plan.

10.4 Testing Verification and Documentation

Testing of materials will be performed as identified in the specifications. The purpose of material testing is to verify that the materials provided or placed conform to the design requirements and dam specifications. Test reports for the project have been listed with the submittals required for the project in Table 10-1.

10.4.1 Test Reports

Test reports shall be provided for each test performed as required by the dam specifications. Test reports shall indicate the time and date of the test, the procedure, the calibration date of equipment (if applicable), identification control number, and the result of the test (whether passing or failing).

10.4.2 Daily Field Inspection Forms

The site superintendent or designated representative will review the work on a daily basis to determine whether the work conforms to the specifications, health and safety requirements and any specific procedures or deficiencies previously identified. A daily CQC report will be completed and retained in the field notebook. A copy of a sample Daily CQC Report has been included as Figure 10-5.

10.5 Deficiencies and Corrective Actions

In the event that a deficiency id identified or work does is not compliant with the specifications, the site superintendent will be notified immediately. The site superintendent will discuss the report with the contractor performing the work and the representative from GEI and the work will be corrected immediately. The site superintendent will confirm that the work has been corrected prior to allowing any contractor to continue additional tasks affected by the non-conforming work.

10.6 Documentation

The superintendent shall maintain all QC records on-site in the project QC notebook. The project QC notebook will contain the list of submittals and test methods identified in the dam specifications, preparatory, initial, and follow up inspection reports, completed Daily QC Reports, test reports, quantities of materials received at the Site, Job Hazard Analysis forms and any non-compliance reports. The notebook will be maintained on a daily basis and will be available for review in the field office trailer.

10.7 Completion Inspections

Pursuant to the UAO, pre-fional and final inspections will be performed in accordance with Section 1.5 – Project Meetings of this Work Plan.

11. HEALTH AND SAFETY

A site-specific health and safety plan (HASP) has been written for the on-site activities to be implemented for completion of the NTCRA. The HASP has been attached as Appendix A of this Work Plan. The HASP identifies the procedures, personnel responsibilities and training necessary to protect on-site personnel during the proposed additional investigation and construction activities. Specifically the HASP will identify the potential hazards that may be encountered, air monitoring procedures, personnel monitoring requirements, PPE, work zones, and equipment to be utilized for provision of health and safety.

12. EMERGENCY CONTINGENCY PLAN

An Emergency Contingency Plan (Contingency Plan) has been developed for the on-site activities to be implemented to complete the NTCRA. This Contingency Plan supplements the emergency procedures described in the HASP provided as Appendix A and applies to all spills, releases, fires, explosions, or other hazardous conditions regardless of size. The procedures outlined in this plan are to be carried out immediately whenever there is a fire, explosion, spill, or release of hazardous waste constituents that could threaten human health or the environment.

The Contingency Plan is designed to protect personnel, property, and the environment from hazardous releases as well as from accidents that occur during the implementation of the NTCRA. The plan describes the emergency management system and the procedures to respond to releases and emergencies. This plan also describes the countermeasures to minimize any adverse impact to the environment, and to reduce injuries from hazardous conditions resulting from accidents.

12.1 General Site and Contact Information

General site and key contact information is presented as follows to facilitate rapid identification of administrative information:

Site/Facility Name:	Centerdale Manor Restoration Superfund Site
Site/Facility Address:	2074 Smith Street (State Route 44), North Providence, Providence County, Rhode Island Latitude: 41^{U}51'29.5" North Longitude: 71^{U}30'28.5" West Directions: Site Phone/Fax #:
Contingency Plan Facilitator:	Jeff Loureiro, Loureiro Engineering Associates, Inc.
USEPA Program Manager:	Anna Krasko
USEPA ID Number:	

The site-specific characteristics and the features of the surrounding area are to be considered in responding to an emergency. The physical characteristics of the site and surrounding area that are discussed in Section 1 of this Work Plan are presented below because this information may

be critical to respond to an emergency. This discussion is designed to aid on-site personnel, off-site responders, and regulatory officials in performing response duties.

The Centredale Manor Restoration Superfund Site is located at 2074 Smith Street (Route 44) in North Providence, Rhode Island. The Site includes sediment and floodplain areas of the Woonasquatucket River from Route 44 southerly to the breached Allendale Dam and further to an area just below the Lymansville Dam. The location of the Site is shown on Figure 1-1 - Site Location Figure.

The identification of the proposed limits of the proposed action areas, along with the vulnerable resources and populations on and off the site property that may be affected by an emergency incident are illustrated in the Site Layout Drawings. The Site Layout drawings show the location of the residential properties, the watercourses associate dwith the project and the location of the Site Storage Area where the response equipment in the event of an emergency will be located.

12.2 Incident Command

Emergency response at the site will be coordinated under an Incident Command System. The Incident Command System establishes the responsibilities of various response personnel, the chain of command, and the proper lines of communication. This response management system will enable a coordinated effort between on-site and off-site responders, and will allow this Contingency Plan to be integrated with Local Emergency Planning Committee (LEPC) plans, Regional Contingency Plans (RCPs), and Area Contingency Plans (ACPs). This unified command will allow all parties who have responsibility for the incident to jointly develop a common set of incident objectives and strategies. A general description of the various response personnel and their responsibilities is provided in the sections that follow.

12.2.1 Duties and Responsibilities

12.2.1.1 Initial Observer

An Initial Observer may be anyone on-site performing NTCRA activities who witnesses an emergency. The Initial Observer of the spill or incident must respond as follows:

- Evaluate the level of risk associated with the spill, fire, explosion, or other hazard and assess whether or not emergency responders (i.e., fire department, police department, emergency medical technicians, etc.) are necessary to control the incident. In making this assessment, the Initial Observer must consider all factors that may affect the safety and health of those on site and in the surrounding

community as well as the individuals whom may respond to the incident. The Initial Observer should identify the incident type, hazards involved, magnitude of the problem, and resources threatened in making this assessment.

- As is appropriate, notify the appropriate off-site response personnel by dialing 911 and providing the following information:
  1. the name of the person reporting the incident, and the number of the telephone from where the report is being made;
  2. the location where the incident occurred;
  3. the nature of the emergency, and whether or not there are any injuries; and
  4. the type and amount of material involved in the incident (if known).
- Notify the Incident Commander of the incident and the status of the response so that he/she may assume control of the response activities.

12.2.1.2 Incident Commander

Under the Incident Command System, the Health and Safety Officer (HSO), as defined in the HASP provided as Appendix A of the Work Plan, will serve as the Incident Commander (Emergency Coordinator). This individual is responsible for implementing this Contingency Plan and for directing all emergency response efforts in controlling a fire, explosion, spill, or other hazard. The Incident Commander will coordinate on-site and off-site emergency response personnel, and will be responsible for communicating with local emergency management officials, especially where the safety of the general public is concerned.

The Incident Commander will direct on-site and off-site response personnel. However, when off-site responders are needed, emergency response action will be directed under a unified command, such that once the off-site responders arrive at the scene of the incident, they will assume control of the response efforts. The Incident Commander will then provide technical support, including reference materials such as Material Safety Data Sheets (MSDS), to the off-site responders.

The general actions to be taken by the Incident Commander are summarized below. The Incident Commander may delegate responsibility to other response personnel who report to him.

- If applicable, activate internal facility alarms and on-site communication systems to evacuate any and all personnel who may be endangered by the incident.
- Identify the character, source, and extent of the fire, explosion, release, or other hazard, and notify emergency responders (i.e., fire department, police department,

emergency medical technicians, etc.) if off-site support is necessary to control the incident.

- Coordinate all emergency response activities with off-site responders. Provide technical support, including available reference materials (e.g., Material Safety Data Sheets) and response procedures, to all off-site responders, who will have jurisdictional and functional control of the emergency response efforts once on Site.
- Where safety to the general public is a concern, notify the EPA so that all necessary procedures outlined in the EPA's Community Relations Plan may be followed.
- Perform ambient air monitoring to ensure that hazardous conditions resulting from the incident do not warrant the evacuation of on-site personnel or the population of the surrounding community.
- Coordinate containment and mitigation of the release. Contain the incident to limit the extent of hazards to human health and the environment and initiate appropriate mitigation measures and remedial action, within the capabilities of available trained personnel and equipment on site.
- Notify the appropriate federal, state, and local agencies if their assistance is needed to control the incident.
- Coordinate all security efforts with EPA in accordance for crowd and traffic control measures.
- Identify the necessary spill control equipment and notify the appropriate clean-up personnel to respond to the incident.
- Identify and assess hazards to human health and the environment based on the location of the incident, the type of emergency, the nature and volume of the material involved, prevailing wind direction, sustained injuries, and the potential for further damage (fire, explosion, health effects, etc.).
- Notify the Site Health and Safety Supervisor (HSS), Site Health and Safety Manager (HSM), and the Project Coordinator.
- Ensure that all emergency response equipment is cleaned and fit for intended use before normal operations are resumed.
- Assess and implement the required level of protection.
- Coordinate and ensure appropriate treatment and disposal activities.
- Ensure that all required emergency notifications to regulatory and community agencies have been made.

- Participate in post-emergency assessments and preventative measures.

12.2.1.3 On-Site Responders

On–site responders include all site workers who have been trained in hazardous waste operations in accordance with 29 CFR 1910.120 as defined by the HASP provided as Appendix A of the Work Plan. On-site responders will report directly to the Incident Commander. The duties and responsibilities of on-site responders include the personnel-specific duties and responsibilities that are presented in the HASP. The responsibilities of on-site responders also include those responsibilities delegated by the Incident Commander.

12.2.1.4 Off-Site Responders

The contacts and emergency telephone numbers for the local off-site emergency responders is included in the following list of emergency contacts:

Fire Department	North Providence Fire Department	911
Hospital	Saint Joseph's Hospital	Ph (401) 456-3000
		Fax (401) 456-3000
Police Department	North Providence Police Department	911
Poison Control Center	Rhode Island Poison Control Center	(800) 682-9211
Project Coordinator	Jeffrey Loureiro, P.E.	(860)747-6181
Corporate Environmental HSM	Dick Twomey	(860)747-6181
USEPA Program Coordinator	Anna Krasko	(617) 918-1232
RIDEM Representative	Sarah Martino	(401) 222-2797

Directions To Hospital: Exit Centredale Manor. Take Route 44 East for 1.8 miles towards Providence. Make a left onto High Service Avenue. The hospital is on the left, approximately 0.3 miles from the junction of Route 44 and High Service Area.

An off-site emergency responder may be contacted by dialing 911. Before any emergency response work begins on the Site, the off-site responders will be briefed by the Incident Commander on the nature of the work and the contaminants of concern. The response management system integrates on-site and off-site emergency response efforts under a unified command. Under this unified command, once the off-site responders arrive at the scene of the incident, they will assume jurisdictional and functional responsibility for the incident. The off-

site responders may rely on the Incident Commander to provide technical support, and to facilitate the coordination of other Site activities.

The North Providence Fire Department HAZMAT team personnel have been trained in the proper handling of hazardous waste and in responding to emergencies that result in hazardous situations. This HAZMAT team will use their Standard Operating Procedures in responding to emergencies at the Site. The appropriate off-site responder will be responsible for providing the necessary staff and emergency response equipment as is required in responding to the emergency.

12.2.2 Notification Procedures

12.2.2.1 "Internal" Notification Requirements

Once the Initial Observer assesses the incident and notifies the appropriate off-site emergency response personnel, as is necessary, the Incident Commander is to be notified of the emergency. In assuming control of the incident, the Incident Commander is responsible for notifying the Project Coordinator, Health and Safety Manager (HSM), and the Health and Safety Supervisor (HSS) of the emergency. The incident commander is responsible for ensuring that the notifications are carried out in a timely manner. The Project Coordinator is responsible for informing the Performing Parties about the emergency. In addition to these notification requirements, additional "external" notification procedures may need to be followed in the event of an emergency.

12.2.2.2 "External" Notification Requirements

If the incident results in the release of hazardous waste or hazardous waste constituents to the environment, then the Incident Commander is also responsible for assessing the need to report the incident to the appropriate agencies as may be required under federal or state regulations. These agencies include federal and state emergency management agencies, State Emergency Response Commissions (SERCs), and LEPCs. Notification to these agencies will be made as early as possible to facilitate a concerted response amongst federal and state on-scene coordinators, on-site responders, and off-site responders.

In addition, the Incident Manager will notify the EPA Program Coordinator so that the EPA may disseminate information about the emergency to the local community including the Urban Rivers Team and the Management Action Committee. LEA will provide a representative to aid the EPA in reporting the incident to the local community. Notification to all affected residents, town

officials, local environmental groups, and other interested parties will be made as early as possible so that they are well-informed about the emergency and any potential future hazards.

12.3 Emergency Response Procedures

12.3.1 Implementation

In many situations, the emergency or hazard required to be reported to the Incident Commander may be managed and controlled by on-site response personnel who follow the standard operating procedures presented in the HASP. In these situations, implementation of the procedures presented in this Contingency Plan will not be required. However, the discovery of an emergency or hazardous condition that requires support from off-site responders may necessitate the implementation of this plan. For example, the discovery of unexpected hazardous waste during excavation activities that results in the release of hazardous substances to the atmosphere or subsurface will require the implementation of the procedures presented in this plan.

In assessing the need to implement this Contingency Plan, a hierarchy of emergency response levels may be used to rapidly assess and classify the emergency or hazardous condition, according to the significance of the incident. The incident may be generally classified as: i) those that may be handled on site by personnel in accordance with standard operating procedures; ii) those that require off-site responders; and iii) those that require off-site responders including personnel trained in hazardous materials emergencies and evacuation procedures. The Incident Commander may implement the Contingency Plan if the following conditions exist:

- fire;
- explosion;
- imminent danger of a fire or explosion involving hazardous materials resulting in the igniting of hazardous wastes; and
- a spill that could result in the release of flammable liquids or vapors, thus causing a fire or explosion hazard.

Factors that should be considered prior to the implementation of this Contingency Plan include:

- the location of the incident;
- the inherent danger of the release;
- the ability to contain and mitigate the hazardous condition; and
- the potential hazards to human health and the environment.

The following sections discuss how this plan will be implemented from discovery, through initial response, mitigation, and post-emergency actions.

12.3.2 Discovery

The decision to initiate an emergency response is made by the Initial Observer upon immediate awareness or discovery of a spill, release, fire, explosion, or other hazard that may jeopardize human health or the environment. In making this decision, the Initial Observer must consider the seriousness of the incident by evaluating the likelihood that the incident will impact human health and safety or the environment. Upon recognition of an incident that requires immediate emergency response, the Initial Observer will notify the appropriate off-site responders and the Incident Commander.

12.3.3 Initial Response

12.3.3.1 Operational Procedures

The initial response to any emergency shall protect human health and may include evacuation. Limiting damage to the environment should be addressed as a secondary priority only after all measures have been taken to protect human health. This secondary priority may include containment and spill countermeasure procedures. The clean-up and disposal of spilled material shall be made after the Incident Commander has identified and assessed all of the hazards.

Upon arriving on the scene of the hazardous condition, the Incident Commander will assess the situation, don appropriate PPE, and institute the appropriate containment and response procedures as defined in this section. In assessing the situation, the Incident Commander should weigh all factors to appropriately match the emergency and its potential impacts with appropriate resources and personnel. The Incident Commander should identify the appropriate response levels based on the need to initiate time-urgent response actions to minimize or prevent unacceptable consequences to the health and safety of workers, the public, or the environment, and the need to communicate critical information concerning the emergency to off-site authorities. A tactical plan should be established that defines specific objectives. These objectives should include immediate measures to protect the workers and the public, mitigating actions to control, contain, and recover any hazardous materials, and the identification of resources that are needed in responding to the hazardous condition. The Incident Commander will, as necessary, call in additional on-site and off-site response personnel to provide assistance in the response operation.

12.3.3.2 Identification of Hazardous Materials

The Incident Commander should immediately identify pertinent information about the hazardous material spill or release (e.g., character, source, amount, extent, etc.). This identification involves visual analysis and investigation of the location and nature of the spill. The Incident Commander should support the investigation of hazardous materials with information provided in MSDS, where appropriate.

12.3.3.3 Hazard Assessment

The Incident Commander will assess the potential direct or indirect hazards to human health and the environment. This assessment will involve an analysis of the likelihood of a fire or explosion by checking for nearby ignition sources. The Incident Commander may identify the composition of a substance, and thus its potential hazards, by the nature and location of the release. The Incident Commander should use his or her training and experience, a review of MSDSs or the Chemical Hazard Response Information System (CHRIS) manual, and support from other personnel in assessing all of the potential hazards of a spill or release. The Incident Commander should also use a common-sense approach to identify the type of emergency, whether an exclusion zone is necessary, whether the source is under control, and the type of response resources needed. In the hazard assessment, the Incident Commander should account for vulnerable receptors, including human populations (both workers and the general public), environmentally sensitive areas, and other site-specific concerns, such as resource protection areas.

12.3.4 Response Procedures for Fire and/or Explosion Involving Hazardous Waste

If a fire or explosion involving hazardous material occurs, the procedures described below shall be followed for rapid and safe response and control of the situation.

The Initial Observer of a fire or explosion contacts the appropriate off-site responder by dialing 911 at the earliest possible moment and provides the following information:

- the name of person reporting and the number of the telephone from which the report is being made;
- the incident location;
- the nature of the emergency;
- the nature and amount of the material involved;
- the corrective action taken, if any;

- the extent of personnel injuries, if any; and
- whether or not a spill or release has occurred or is threatening to occur.

In addition, if a fire or explosion has occurred, the following response actions are initiated:

- the on-site alarm system is sounded in accordance with this plan and the HASP; and
- evacuation procedures are implemented in accordance with Section 12.3.7 of this plan.

The Incident Commander will then assess the character, exact source, amount, and extent of the hazard associated with the fire or explosion. The appropriate authorities are notified as described in Section 12.2.1.4 – Off-site Responders. The Incident Commander will coordinate the on-site and off-site response activities, and will support the off-site responders who will assume direct command of the response once they arrive at the scene of the emergency.

12.3.5 Response Procedures for Spills or Releases of Hazardous Waste

In the event of a release of hazardous material to the environment, the following procedures should be implemented for rapid and safe response to contain, limit, and clean up the spill.

The Initial Observer of the spill must notify the appropriate off-site response personnel by dialing 911 and providing the following information:

- the name of the person reporting the incident, and the number of the telephone from where the report is being made;
- the location where the incident occurred;
- the nature of the emergency, and whether or not there are any injuries; and
- the type and amount of material involved in the incident (if known).

The Initial Observer must also notify the Incident Commander of the incident and report the status of the response so that he/she may assume control of the response activities. The Incident Commander then assesses the character, exact source, amount, and extent of any released materials or chemical spill. The Incident Commander also selects, in consultation with the HSM and HSS, the appropriate personal protective safety gear and equipment. The Incident Commander will take all reasonable measures to prevent a spill or other release of hazardous materials from spreading to other areas. If possible, action will be taken to contain, limit, and

clean up a spill by qualified on-site personnel with care and good judgment to avoid risk or injury to personnel and minimize the impact on the environment.

12.3.6 Mitigation

Mitigation of the incident involves a transition from an emergency management system to a response management system, or a sustained action stage where more prolonged containment and recovery actions are implemented. Once the initial response to any emergency ensures the protection of human health, then containment and spill countermeasure procedures are implemented to limit the damage to the environment. These procedures include the clean-up and disposal of spilled material. These procedures may also include assessment monitoring after the Incident Commander has identified and assessed all of the hazards.

12.3.7 Evacuation Plan

12.3.7.1 General Responsibilities

In the event of a sudden and uncontrollable hazardous condition such as fire, explosion, or major uncontrollable chemical spill that poses a threat to the safety of personnel, the area of the hazardous condition shall be evacuated immediately in an orderly and efficient manner. The Incident Commander is responsible for implementing this evacuation plan when:

1) A hazard exists that threatens the health and/or safety of on-site personnel.
2) Unreasonable exposure to the hazard for all on-site personnel is not preventable as long as they remain on-site.
3) The time required for the notification and movement of on-site personnel from the hazardous area to a safe command post is not enough to permit a safe and orderly evacuation using verbal signals only.

During an evacuation, the Incident Commander is responsible for ensuring that all on-site personnel leave the hazardous area in a quickly and orderly manner. A daily sign-in sheet shall be provided and filled out for each person working or visiting the Site. The Incident Commander must also instruct personnel to retreat to a designated command post, located upwind to the Site. Once all on-site personnel have retreated to this command post, the Incident Commander will immediately report any missing persons to the HSS and HSM.

Employee responsibilities during an evacuation are outlined as follows:

1) Immediately report any emergency or hazardous condition that may require evacuation to the Incident Commander.
2) Proceed to the designated command post in an orderly manner when directed to evacuate a hazardous area.
3) Rendezvous at the designate command post and report to the Incident Commander.

12.3.7.2 Emergency Precautions

Keep calm, think, avoid panic and confusion.

Know all exit routes. Be sure you know the primary and secondary exits out of the designated work area.

Do not delay evacuation of the Site for any reason.

When evacuating the Site WALK to the proper exit.

DO NOT re-enter the Site until instructed to do so.

12.3.7.3 Communication

As provided for in the HASP of this Work Plan (Appendix A), three short blasts from an air horn will designate the need to evacuate the Site. Communication between the Site and off-site personnel will be by installed telephones to coordinate emergency response efforts, notify appropriate authorities, and maintain contact with off-site personnel.

12.3.7.4 Procedure for Evacuation

Three short blasts from an air horn will be provided as a signal to evacuate the Site. Immediately upon hearing the evacuation signal, all work must stop. The Incident Commander will coordinate the evacuation of all personnel to the designated command post. The Incident Commander will designate the command post based on the source and the extent of the hazardous condition. If the Incident Commander identifies a threat to neighboring properties and the evacuation of off-site areas, he/she will notify off-site responders and authorities about the hazardous condition and evacuation. Evacuation procedures will then be coordinated with local, state, and federal emergency planning officials, as is necessary. The EPA Program Coordinator will be contacted to assist efforts with public evacuation whenever necessary.

12.3.8 Post-Emergency Actions

The Incident Commander will terminate an emergency response when the emergency management system for the Site is no longer needed to ensure safety to human health and the environment. The Incident Commander will terminate a response by recording the incident in the operating record.

Following all incidents to which off-site responders are involved, the Incident Commander must complete a written incident report. The Incident Commander will conduct a post-incident debriefing of involved supervisors and all response personnel including community responders for incidents involving implementation of this Contingency Plan, as deemed necessary. A formal incident critique and written report including recommended changes to the Contingency Plan will follow as required.

12.3.9 Post-Emergency Equipment Maintenance and Waste Disposal

Immediately after an incident, the Incident Commander will make arrangements to store or dispose recovered hazardous waste or any other contaminated material. All emergency equipment that is utilized and potentially exposed to contamination will be decontaminated in accordance with this Work Plan. Any wastes that are generated as a result of the decontamination process will also be managed as described in this Work Plan.

12.4 Emergency Equipment

The appropriate off-site responder will provide the necessary emergency response equipment and resources to control and manage fires, explosions, and the release of hazardous wastes that may threaten human health or the environment. Emergency response equipment and resources to control and manage emergencies and hazardous conditions that do not require the implementation of this plan are stored in the equipment and material storage area. Generally, this equipment may be categorized as personal protection equipment, fire response equipment, medical response equipment, or spill control equipment. Descriptions of these emergency equipment and resources are presented in the HASP provided as Appendix A of this Work Plan.

12.5 Incident Reporting Requirements

12.5.1 General

This section contains a summary of the verbal and written notifications that must be made to federal, state, and local agencies in the event of a release. The Incident Commander will provide for a signed record of initial notifications to document compliance with the appropriate regulations. For further information or clarification of the reporting requirements, refer to the

federal hazardous waste regulations provided in 40 CFR 264.56 and 265.56, and to the Rhode Island Rules and Regulations for the Investigation and Remediation of Hazardous Material Releases (Remediation Regulations).

12.5.2 Any Release/Incident

Any incident involving the discharge, spillage, uncontrolled loss or seepage of any chemical product (solid, liquid, or gas) or hazardous waste must be reported immediately RIDEM and the EPA as soon as practical after an incident, but no later than the end of the next full work day. A written report documenting the nature of the incident shall be completed by the Incident Commander and shall be forwarded to the RIDEM and EPA representatives.

12.5.3 Releases Reportable Under CERCLA

In addition to the notifications made for any release or incident, a release or spill of a hazardous substance that exceeds the reportable quantity for the hazardous substance must be reported immediately to the National Response Center. The following information should be provided:

- the name and telephone number of the reporter;
- the name and address of the Site;
- the time that the incident occurred;
- the nature of the incident;
- the name and quantity of the materials involved, to the extent known;
- the extent of injuries, if any;
- the possible hazards to off-site populations and the surrounding environment; and
- the containment and mitigation actions taken to control the release.

12.5.4 Releases reportable under SARA Title III

In addition to the notifications made for any release or incident, a release or spill of a CERCLA hazardous substance or extremely hazardous substance, that exceeds the reportable quantity as listed in 40 CFR 302.4 or 355 Appendix A, must be reported immediately to the State Emergency Response Commission and the Rhode Island DEM. The following information should be provided:

- the name and telephone number of the reporter;
- the chemical name or identity of the substance involved in the release;
- an indication that the substance is an extremely hazardous substance;

- an estimate of the quantity released to the environment;
- the time and duration of the release;
- the environmental media into which the release occurred (air, surface, groundwater, or soil); and
- any known or anticipated health risks associated with the released substance.

As soon as practicable after a release reportable under SARA Title III (EPCRA), a written follow-up notice must be sent to the State Emergency Response Commission and the Local Emergency Planning Committee. The written notice must contain:

1) The information provided during the verbal notification.
2) Precautions taken as a result of the release, including evacuation.
3) Where appropriate, advice regarding medical attention necessary for exposed individuals.

12.5.5 Releases Requiring the Implementation of the Contingency Plan

The verbal notification requirements of releases requiring the implementation of the Contingency Plan include the requirements presented in Sections 12.2, 12.3, and 12.5, as are applicable. Within 15 days after an incident requiring the implementation of the Contingency Plan, a written report on the incident must be submitted to RIDEM, the EPA and the File. The report must include:

1) the name, address, and telephone number of the contact of Performing Parties Group;
2) the name, address, and telephone number of the Site;
3) the date, time, and type of incident;
4) the name and quantity of the materials involved;
5) the extent of injuries, if any;
6) an assessment of actual or potential hazards to human health or the environment; and
7) the estimated quantity and disposition of recovered material that resulted from the incident.

12.6 Amendment and Distribution of the Plan

The Incident Commander is responsible for performing an investigation to identify the cause(s) of the emergency or hazardous condition. This investigation includes a critique of this Contingency Plan, in general, as well as a critique of the emergency management system and incident command system employed to respond to the incident. The Incident Commander will

prepare a written follow-up report that proposes procedures to modify the Contingency Plan based on the lessons learned through response to the incident.

In addition, this Contingency Plan will be reviewed and immediately amended, if necessary, whenever:

1) applicable regulations are revised;
2) the plan fails in an emergency; or
3) the activities to be performed at the site in fulfillment of the NTCRA change in a way that materially increases the potential for fires, explosions, or releases of hazardous waste or hazardous waste constituents, or change the response necessary in an emergency.

This Contingency Plan shall be distributed to key personnel involved in the NTCRA. A copy of this plan is maintained on-site in the field office trailer.

13. COMMUNITY RELATIONS SUPPORT PLAN

In order to assist the EPA in maintaining a comprehensive community relations program for citizens affected by contamination that exists at the Site and to ensure that the local public has input into Superfund decisions, the EPA has prepared a site-specific Community Relations Plan. The Respondents will be required to ensure adequate support for the community relation efforts. Therefore, LEA has prepared this Community Relations Support Plan (CRSP) to outline the measures that will be undertaken to ensure that all affected residents, town officials, local environmental groups, and other interested parties are well-informed as the implementation phase of the project proceeds as requested by the EPA. These measures include the participation at public meetings and the preparation of documents and drawings to provide continuing education of the work being performed.

13.1 Supporting Tasks

Since the beginning of Centredale Project, the EPA has been actively working with several programs and partnerships in the Woonasquatucket River watershed area including, local environmental groups such as the Urban Rivers Team, and federal programs which include the Management Action Committee. Discussed below are the efforts that will be undertaken by LEA in order to continue the EPA's dedication to community involvement in the Centredale Project.

13.1.1 Working Relationships

LEA and its subcontractors will establish a good working relationship with the local and state officials, area residents, the Management Action Committee, and other persons or organizations involved in the project. LEA, with guidance from the Respondents and the EPA, shall provide local political and environmental leaders with sufficient information regarding Site activities, so that they will be able to address basic site-related questions for the public.

13.1.2 Public Meetings

LEA will provide an employee, either the President or the Project Manager, who is reasonably knowledgeable of the Centredale Site and all remediation activities that are being performed in at the Site will participate in both public information and technical meetings. Upon request LEA will prepare the visual aids and the equipment deemed necessary for the accurate representation of the project at public meetings.

13.2 Documentation

In addition to participating in meetings, LEA will also provide the support the EPA needs in order to publish and distribute project fact sheets and/or project updates to the community and involved groups. All documents distributed by LEA will be clearly written without an excess of scientific terminology, so that residents can understand the activities being conducted on the Site.

13.3 Individual Property Owners

While performing sampling and remediation activities along the Woonasquatucket River, it is likely that LEA will come into direct contact with the owners of the residential properties affected by the implementation activities. In such an event, all LEA employees and its subcontractors involved in the project will be given the knowledge required to adequately answer questions posed by the residents affected. In the case that a question can not be sufficiently answered by an LEA employee, the resident will be directed to the appropriate people who can provide the proper response.

14. SCHEDULE

A preliminary Implementation Schedule was provided in the Design Work Plan submitted by LEA on May 9, 2001. The preliminary schedule indicates that a expedited review of the 100% Design documents would be required to complete the dam reconstruction this construction season. Approximately 90 working days will be required to substantially complete the reconstruction of the dam with site restoration activities completed in the spring of 2002. A preconstruction meeting has been tentatively scheduled for August 17, 2001.

The UAO requires a completion of all construction activities within 180 days of the approval of the 100% Design. The Implementation Schedule included as Figure 14-1 indicates that 180 days will not be sufficient to complete the work associated with the soil and sediment removal due to weather conditions and the expected start date. Based upon estimated turn-around times for dioxin sample analysis and data validation, the determination whether the removal of all soil from the proposed action areas may not be made until the beginning of April. Site restoration could be completed in the Spring of 2002, if and only if, no additional removal is required in a specific excavation. Those action areas that fixed laboratory analysis indicate additional soil removal is required, the removal, sampling, analysis and validation procedure will need to be repeated. An additional 3 months may be required for these areas prior to site restoration.

Because site restoration for the excavation areas would need to be performed in the Spring of 2002 when it is possible to establish a suitable stand of vegetation, the residents of properties where removal has occurred may take exception to the open excavation in their rear yard for the holidays. It may be appropriate to wait until the next construction season (spring 2002) to begin the removals in the residential lots.

The reconstruction of the dam will begin in August assuming EPA approval of the 100% Design by the beginning of August 2001. If EPA approval delays the start of construction beyond August, an adequate construction period prior to winter and the end of the construction season may not be available. In any event, it is likely that site restoration of the area surrounding the dam could not be completed prior to the spring of 2002.

15. INSTITUTIONAL CONTROLS PLAN

The Scope of Work attached as Exhibit A to the EPA's March 26, 2001 Unilateral Order (effective date April 9, 2001) at page 8 of 18 requires that the Respondents submit a plan for the implementation of certain institutional controls in conjunction with that Scope of Work. In that regard, Respondents note that the institutional controls for the structure of the Allendale Dam, as identified in the EPA's January 18, 2001 Action Memorandum, specifically calls for a negative easement restricting alteration of the dam. The duration of such negative easement is "until such time as the Dam is no longer considered by EPA to be necessary for meeting response action objectives at the Site." In addition, the EPA's January 18, 2001 Action Memorandum also discussed post-removal (i.e., after dam reconstruction) site controls requiring the Respondents to maintain the dam by assuring that the spillway does not get plugged up with debris essentially raising the height of the water and potentially causing the reconstructed dam to fail. Under the relevant Scope of Work, particularly Paragraph 5 thereof beginning at page 8 of 18, Respondents believe that these are the only institutional controls that are applicable to given the parameters of such Scope of Work.

With respect to the actual implemenation of the aforementioned institutional controls, Respondents propose as follows:

1. Within 30 days after approval by the EPA of Respondents' proposed Institutional Control Plan ("ICP") as stated herein, Respondents will use their best efforts to secure the written approval of the owner of the Allendale Dam of a negative easement restricting alteration of the dam in any way until such time as the dam is no longer considered by EPA to be necessary for meeting the response action objectives at the Site, with such easement to run with the land and to be binding on all successors and assigns of the current owner of the Allendale Dam.

2. Once approval of the negative easement referenced in paragraph 1 above is secured from the owner of the Allendale Dam, Respondents will within 7 days prepare a draft easement document in that regard and provide it to the owner of the Allendale Dam for review and approval. Once such approval of the actual easement document is secured from the owner of the Allendale Dam, Respondents will provide the EPA with the draft easement document for its review and approval. Only after the EPA has provided its approval of the draft easement document will the Respondents present such document to the owner of the Allendale Dam for execution. Once executed, the easement document will be filed in the appropriate land records within 7 days and the EPA is to be provided with a certified copy of such document as recorded (with the recording information noted on such certified copy) within 14 days thereafter. The

easement document itself will specifically note that such easement is to remain in effect until such time as the dam is no longer considered by EPA to be necessary for meeting the response action objectives at the Site.

3. Until such time as the dam is no longer considered by EPA to be necessary for meeting the response action objectives at the Site, Respondents will maintain the dam by assuring that the spillway does not get plugged up with debris essentially raising the height of the water and potentially causing the reconstructed dam to fail. Respondents will meet this maintenance requirement by causing their approved Contractor to check the dam on a monthly basis until the time frame in the first sentence of this subparagraph has been achieved and by submitting a written report to a designated EPA official affirming that the dam, as reconstructed, is operating appropriately. In the event that Respondents' Contractor determines that the dam, as reconstructed, is not operating properly and, as a result, is causing the height of the water behind it to rise in a manner that threatens the integrity of the dam, Respondents will take all reasonable steps to mitigate this condition as expeditiously as commercially possible.

4. Since none of the property where access and/or land/water use restrictions are needed to implement the Order is owned or controlled by any of the Respondents, no easements or other instructional controls are required with respect to property owned by the Respondents.

16. DISCLAIMER AND CERTIFICATION STATEMENT

"Disclaimer: This document is a DRAFT document prepared by the Respondents under a government Unilateral Administrative Order. This document has not undergone formal review by the EPA and RIDEM. The opinions, findings, and conclusions expressed are those of the author and not those of the U.S. Environmental Agency or the Rhode Island Department of Environmental Management."

"To the best of my knowledge, after thorough investigation, I certify that the information contained in or accompanying this submission is true, accurate, and complete. I am aware that there are significant penalties for submitting false information, including the possibility of fine and imprisonment for knowing violations."

_____

Jeffrey J. Loureiro, P.E., L.E.P.
Project Coordinator

TABLES

Table 2-1

Centredale Manor Restoration Superfund Site
North Providence, Rhode Island

Sample Location with Dioxin Concentrations Exceeding 1 ppb

Proposed Action Area	Sample Location	Dioxin Concentration
Area 1	CMS-456	2.1 ppb
Area 2	CMS-123	2.1 ppb
Area 3	RES-14-333-03 RES-14-333-01 CMS-159 CMS-483	2.38 ppb 1.38 ppb 3.38 ppb 2.76 ppb
Area 4	CMS-221	1.99 ppb
Area 5	CMS-193	9.9 ppb
Area 6	CMS-202 CMS-205 CMS-206	2.53 ppb 13.3 ppb 4.5 ppb
Area 7	CMS-476 CMS-477 CMS-493 RES-12-555-01	5.42 ppb 8.86 ppb 1.39 ppb 3.26 ppb
Area 8	SD-20 SD-21 AD-05 AD-01 WRL-SD-2039	3.61 ppb 4.11 ppb 2.81 ppb 93.3 ppb 2.87 ppb
Area 9	RES-11-425-01	1.5 ppb
Area 10	RES-11-396-01	1.11 ppb
Area 11	LPX-SD-2050	6.31 ppb
Area 12	LPX-BK-2007	1.06 ppb

TABLE 3-1

Critical Access Agreements
Centredale Manor Restoration Superfund Site
North Providence, Rhode Island

Plat #	Lot #	First Name	Address of Owner	Town, Zip	Letter Sent	Response Received	Access Approved	Access Denied	Critical
10	53	Mr. Joseph DeLuca	191 Carleton Street	Providence, RI, 02908	5/23/01	**hand delivered 6/6-X-6-6 mailed 6-8/6-15**	**X**		Y
10	632	State of Rhode Island	220 Woonasquatucket Ave	North Providence, RI 02911	5/24/01	6/4/01	**X**		Y
11	396	Eastlande Mobile Home Park Corporation	296 Woonasquatucket Ave	North Providence, RI 02911	5/23/01	**resent 6/5**	**X**		Y
11	497	Mr. & Mrs. Frank C. Velleco	306 Woonasquatucket Ave	North Providence, RI, 02911	5/23/01	X 5-29	**X**		Y
11	423, 424	Mr. & Mrs. Richard J. McCoy	18 Falco Avenue	North Providence, RI, 02911	5/23/01	X6-4	**X**		Y
11	425, 426	Mr. Anthony J. Campanelli	16 Falco Avenue	North Providence, RI, 02911	5/23/01	X-5-31	**X**		Y
12	553	Ms. Mary Jane Davidow	524 Woonasquatucket Ave	North Providence, RI 02911	5/23/01	X 5-29/6-11-01	**X**		Y
12	554	Ms. Hilda E. Carone	518 Woonasquatucket Ave	North Providence, RI 02911	5/23/01	X 5-29	**X**		Y
12	555	Ms. Alice I. Richardson	512 Woonasquatucket Ave	North Providence, RI 02911	5/23/01	X-6-1	**X**		Y
14	268	Mr & Mrs. James Scott	2 Mill Street	North Providence, RI 02911	5/23/01	**returned 6-12**			Y
14	271	Mr. & Mrs. Anthony Serio	41 Steere Avenue	North Providence, RI, 02911	5/23/01	X 5-29	**X**		Y
14	273	Mr. & Mrs. Charles Naber	36 Steere Avenue	North Providence, RI 02911	5/23/01	X 5-29	**X**		Y

TABLE 3-1

Critical Access Agreements
Centredale Manor Restoration Superfund Site
North Providence, Rhode Island

Plat #	Lot #	First Name	Address of Owner	Town, Zip	Letter Sent	Response Received	Access Approved	Access Denied	Critical
14	301	Ms. Antoinette Grenier	45 Grover Street	North Providence, RI 02911	5/23/01	X 5-29	**X**		Y
14	366	Ms. Jacqueline G. Rehel	46 George Street	North Providence, RI 02911	5/23/01	X 5-29	**X**		Y
14	398	Mr. & Mrs. John Fitzgerald	41 Stevens Street	North Providence, RI 02911	5/23/01	X-6-4	**X**		Y
14	398	Mr. Jean Lemieux	41 Stevens Street	North Providence, RI 02911	5/23/01	X-6-4	**X**		Y
14	399	Mr. & Mrs. Josephore Peloquin	44 Stevens Street	North Providence, RI 02911	5/23/01	X 5-29	**X**		Y
14	417	Ms. Debra R. Assante	21 Aldrich Street	North Providence, RI 02911	5/23/01	**resent 6/5**	**X**		Y
14	421	Mr. Donald A. Asselin	22 Aldrich Street	North Providence, RI 02911	5/23/01	X 5-29	**X**		Y
14	332, 333, 334	Ms. Flora E. Rotella	42 Redfern Street	North Providence, RI 02911	5/23/01	X 5-29	**X**		Y
36	104	Mr. & Mrs. Mario Libutti	100 Allendale Avenue	Johnston, RI 02919		resent 6-12	**X**		Y
10	74, 75, 76	Mr. & Mrs. Duane Laurie	18 Water Street	North Providence, RI 02911	5/23/01	X 5-29	**X**		Y,N,N
		Mr. Frank Lombardi, Mill at Allendale Condominum Association	1000 Smith Street	Providence, RI 02908	faxed 6/20/01		**X**		

Note: Shaded properties indicate that access has been neither approved or denied. Discussions with the property owners are still being performed and negotiated.

TABLE 3-2

Non-Critical Access Agreements
Centredale Manor Restoration Superfund Site
North Providence, Rhode Island

Plat #	Lot #	First Name	Address of Owner	Town, Zip	Letter Sent	Response Received	Access Approved	Access Denied	Critical
10	42	Mr. John J. Testa	5 Testa Drive	North Providence RI, 02911	5/23/01	X 5-29	**X-with stip**		N
10	604	Ms. Louise Furtardo	36 Allendale Avenue	North Providence RI 02911	5/23/01	X 5-29	**X**		N
10	606	Ms. Antonetta Coradetti	36 Allendale Avenue	North Providence RI, 02911	5/23/01	X 5-29	**X**		N
10	4,5	Mr. & Mrs. Raymond G. Pellegrino	28 Oak Street	North Providence RI, 02911	5/23/01	X 5-29	**X**		N
11	21	M & L Realty	1 Warren Avenue	North Providence RI, 02911	5/23/01	X 5-29			N
11	328	Mr. John Lawrence Graham	316 Woonasquatucket Ave	North Providence RI, 02911	5/23/01	X 5-29	**X**		N
11	419	Mr. Thomas Muscatelli	36 Zambarano Avenue	North Providence RI, 02911	5/23/01	X-5-31	**X**		N
11	420	Mr. & Mrs. Aleck J. Depetrillo	37 Zambarano Avenue	North Providence RI, 02911	5/23/01	X-5-31	**X**		N
11	422	Mr. Frank Cornachione	35 Zambarano Avenue	North Providence RI, 02911	5/23/01	X-6-4	**X**		N
11	432	Mr. & Mrs. Raymond Simmons	10 Falco Avenue	North Providence RI, 02911	5/23/01	X-5-31	**X**		N
11	486	Mr. Robert Souza	318 Woonasquatucket Ave	North Providence RI, 02911	5/23/01	X 5-29	**X**		N
11	486	Mr. Frank Defelice	318 Woonasquatucket Ave	North Providence RI, 02911	5/23/01	X 5-29	**X**		N

TABLE 3-2

Non-Critical Access Agreements
Centredale Manor Restoration Superfund Site
North Providence, Rhode Island

Plat #	Lot #	First Name	Address of Owner	Town, Zip	Letter Sent	Response Received	Access Approved	Access Denied	Critical
11	556	Bianca Properties, LLC	2 Warren Avenue	North Providence RI, 02911	5/23/01	X 5-29			N
11	577	Ms. Denise Cassisi	33 Oak Street	North Providence RI, 02911		**resent 6/5**	**X**		N
11	13, 20	Mr. Gerald F. Cerce	4 Warren Avenue	North Providence RI, 02911	5/23/01	X 5-29		**X**	N
11	427, 428, 429	Mr. & Mrs. Lorenzo Cinquegrana	14 Falco Avenue	North Providence RI, 02911	5/23/01	X-5-31	**X**		N
11	430, 431	Mr. & Mrs. Frank Rapone	4 Ferncrest Drive	Johnston RI, 02919	Resent 6/19/01	X-6-1			N
11	434, 435, 436, 437, 438	Mr. Steven Casinelli	330 Woonasquatucket Ave	North Providence RI, 02911	5/23/01	X 5-29			N
12	320	Providence Boys Club	498 Woonasquatucket Ave/**33 Maple St.**	North Providence RI, 02911	5/23/01	**hand delivered 6/6**	**X**		N
12	550	Allendale Baptist Church	545 Woonasquatucket Ave	North Providence RI, 02911	5/23/01	X-5-31	**X**	Curator	N
				North Providence RI, 02911				Reverand	N
12	551	Mr. Harold E. Lewis	542 Woonasquatucket Ave	North Providence RI, 02911	5/23/01	X-6-7			N
12	552	Mr. Ross KJ McCurdy	530 Woonasquatucket Ave	North Providence RI, 02911	5/23/01	X-5-31	**X-With Stip**		N
12	556	Mr. & Mrs. Joseph Dionne	500 Woonasquatucket Ave/ownes 513	North Providence RI, 02911	5/23/01	X-6-1	**X**		N

TABLE 3-2

Non-Critical Access Agreements
Centredale Manor Restoration Superfund Site
North Providence, Rhode Island

Plat #	Lot #	First Name	Address of Owner	Town, Zip	Letter Sent	Response Received	Access Approved	Access Denied	Critical
12	239, 240	Ms. Eva I. Cusson/Theresa DiStefano	562 Woonasquatucket Ave-57 ALLEN ST.	North Providence RI, 02911	5/23/01	X 5-29	X		N
12	322, 323, and 324	Mr. Felix Parcaro, Jr.	4 Warren Avenue	North Providence RI, 02911	5/23/01	X 5-29		X	N
14	365	Mr. Jon W. Luca	43 George Street	North Providence RI, 02911	5/23/01	X 5-29	X		N
14	430	Mr. & Mrs. Frank P. Sgambato	15 Centredale Avenue	North Providence RI, 02911	5/23/01	X 5-29	X		N
14	448	Mr. & Mrs. Ettore Saravo	34 Centredale Avenue	North Providence RI, 02911	5/23/01	X 5-29	X		N
14	449	Mr. Vincenza DiLazzaro	578 Woonasquatucket Ave	North Providence RI, 02911	5/23/01	X 5-29			N
14	450	Mr. Daniel McClusker	572 Woonasquatucket Ave	North Providence RI, 02911	5/23/01				N
14	270, P12L 669	Town of North Providence -Town Clerk	2000 Smith Street	North Providence RI, 02911	5/23/01	X 5-29	X		N
14	422, 424, 425	Mr. & Mrs. Joseph A. Vitullo	16 & 18 Aldrich Street	North Providence RI, 02911	5/23/01	X 5-29	X		N
11	11, 12, P12 L321	Sunrise Properties	4 Warren Avenue	North Providence RI, 02911	5/23/01	X 5-29		X	N,N

Shaded properties indicate that access has been neither approved or denied. Discussions with the property owners are still being performed and negotiated.

Table 6-1
EPA Electronic Data Submission Table Name and Definitions

Table	Definition
EFCSL	Relates epasamno, fraction, case, sdg, and laboratory. Populated using information from COCs. Used in combination with well_sample_data and tbsample to track progress of data delivery from laboratories.
tbDeletedResultsLabAnal	Stores dilution and reanalysis analytical results deleted from tbresultslabanal following data validation.
tbFraction	Stores valid values for fraction.
tbMatrix	Stores valid values for matrix.
tbReject	Stores a "before validation" copy of analytical results that have been rejected during data validation.
tbResultsLabAnal	Stores analytical results excluding laboratory QC samples and PE samples.
tbResultsLabAnalQC	Stores analytical results for laboratory QC samples and PE samples.
tbSample	Lookup table used during analytical data upload to relate epasamno and nsample.
tbSort	Stores valid values for Chemical Abstracts Service number (casno) and standard chemical name used by TtNUS (parameter).
tbUnits	Stores valid values for units.
Well_Sample_Data	Stores sample collection data (e.g. location, date, matrix).

Table 6-2
Field Definitions, EPA Electronic Data Submission

Table	Field Number	Field Name	Field Type	Field Size	Default Value	Definition
EFCSL	0	EPASAMNO	dbText	30		CLP traffic report number or Delivery of Analytical Services (DAS) number. Used by laboratory to report results. Lab appends suffix of "DL" or "RE" to the EPASAMNO to identify dilutions and reanalyses.
EFCSL	1	FRACTION	dbText	15		Analysis code. See tbFraction for valid values.
EFCSL	2	CASE	dbText	5		In CLP program, identifies samples sent to a laboratory over a specific period of time.

Table 6-2
Field Definitions, EPA Electronic Data Submission

EFCSL	3	SDG	dbText	15		Sample Delivery Group. In CLP and DAS analyses, SDGs are groups of up to 20 samples that are reported together in one data package. The SDG is set to the first (alphabetically) EPASAMNO in the SDG.
EFCSL	4	LABORATORY	dbText	25		Name of the laboratory.
EFCSL	5	TAT	dbInteger	2	21	Turn around time in days.
tbDeletedResultsLabAnal	0	NSAMPLE	dbText	30		Unique sample number as recorded in the sample station or location column in the Chain of Custody. Combination of abbreviations of some of the following fields: site, aoc, ou, matrix, boring, depth, samp_date, and filtered.
tbDeletedResultsLabAnal	1	FRACTION	dbText	5		Analysis code. See tbFraction for valid values.
tbDeletedResultsLabAnal	2	PARAMETER	dbText	45		Chemical name used in this database for a particular CAS number.
tbDeletedResultsLabAnal	3	EPASAMNO	dbText	12		CLP traffic report number or Delivery of Analytical Services (DAS) number. Used by laboratory to report results. Lab appends suffix of "DL" or "RE" to the EPASAMNO to identify dilutions and reanalyses.
tbDeletedResultsLabAnal	4	CASNO	dbText	50		Chemical Abstracts Service number, without dashes.
tbDeletedResultsLabAnal	5	LAB_RESULT	dbDouble	8		Numerical portion of the analytical result, in units recorded in the units field, and as qualified by the qualifier recorded in the qual field.
tbDeletedResultsLabAnal	6	QUAL	dbText	5		Qualifier portion of analytical result. Non-detected results generally include a "U" in the qualifier. See tbQualifier for valid values.
tbDeletedResultsLabAnal	7	OUR_RESULT	dbText	15		Combination of LAB_RESULT (to correct significant figures) & " " & QUAL. For reporting.
tbDeletedResultsLabAnal	8	UNITS	dbText	5		See tbUnits for valid values.
tbDeletedResultsLabAnal	9	CASE	dbText	5		In CLP program, identifies samples sent to a laboratory over a specific period of time.

Table 6-2 Field Definitions, EPA Electronic Data Submission						
tbDeletedResultsLabAnal	10	SDG	dbText	15		Sample Delivery Group. In CLP and DAS analyses, SDGs are groups of up to 20 samples that are reported together in one data package. The SDG is set to the first (alphabetically) EPASAMNO in the SDG.
tbDeletedResultsLabAnal	11	LABORATORY	dbText	25		Name of the laboratory.
tbDeletedResultsLabAnal	12	LAB_ID	dbText	15		Laboratory Identification Number. Used internally by the laboratory to identify the sample.
tbDeletedResultsLabAnal	13	REC_DATE	dbDate	8		Date a sample is received by the laboratory.
tbDeletedResultsLabAnal	14	EXTR_DATE	dbDate	8		Date sample was extracted or prepared for analysis by the laboratory.
tbDeletedResultsLabAnal	15	ANAL_DATE	dbDate	8		Date the sample was analyzed by the laboratory.
tbDeletedResultsLabAnal	16	METHOD	dbText	50		Analytical method used, as reported by the laboratory.
tbDeletedResultsLabAnal	17	MDL	dbDouble	8	0	Method Detection Limit as reported by the laboratory.
tbDeletedResultsLabAnal	18	IDL	dbDouble	8		Instrument Detection Limit.
tbDeletedResultsLabAnal	19	CRDL_CRQL	dbDouble	8		Contract Required Detection Limit or Contract Required Quantitation Limit.
tbDeletedResultsLabAnal	20	DIL_FACTOR	dbDouble	8		Dilution factor.
tbDeletedResultsLabAnal	21	PCT_MOIST	dbDouble	8		Percent Moisture.
tbDeletedResultsLabAnal	22	COMMENTS	dbText	20		Optional additional information.
tbDeletedResultsLabAnal	23	DATASET	dbText	75		Combination of Case, SDG, Fraction, and Units fields. Used to group analytical results for reporting.
tbDeletedResultsLabAnal	24	VALIDATED	dbBoolean	1		Valid values are True and False.

Table 6-2 Field Definitions, EPA Electronic Data Submission						
tbDeletedResultsLabAnal	25	DATEAPPENDED	dbDate	8	=Now()	Date record was appended to this table.
tbDeletedResultsLabAnal	26	DVTIER	dbInteger	2	0	Level of Data Validation. Valid values are 1 (cursory), 2 (moderately rigorous), 3 (rigorous).
tbFraction	1	PRINTORDER	dbDouble	8	0	Used to sort fractions in a particular order for reporting.
tbFraction	2	FRACTION	dbText	10		Analysis code. See tbFraction for valid values.
tbFraction	3	DESCRIPTION4	dbText	75		Verbose description of Fraction field.
tbFraction	4	DESCRIPTION	dbText	255		Verbose description of Fraction field.
tbFraction	5	DESCRIPTION2	dbText	75		Verbose description of Fraction field.
tbFraction	6	DESCRIPTION3	dbText	75		Verbose description of Fraction field.
tbFraction	7	OLDPRINTORDER	dbDouble	8		This field is not used.
tbFraction	8	DESCSHORT	dbText	50		Terse description of Fraction field.
tbMatrix	1	MATRIX	dbText	50		Physical state of the sample. Valid values for matrix field in well_sample_data.
tbReject	0	NSAMPLE	dbText	30		Unique sample number as recorded in the sample station or location column in the Chain of Custody. Combination of abbreviations of some of the following fields: site, aoc, ou, matrix, boring, depth, samp_date, and filtered.
tbReject	1	FRACTION	dbText	5		Analysis code. See tbFraction for valid values.
tbReject	2	PARAMETER	dbText	45		Chemical name used in this database for a particular CAS number.
tbReject	3	EPASAMNO	dbText	12		CLP traffic report number or Delivery of Analytical Services (DAS) number. Used by laboratory to report results. Lab appends suffix of "DL" or "RE" to the EPASAMNO to identify dilutions and reanalyses.
tbReject	4	CASNO	dbText	50		Chemical Abstracts Service number, without dashes.
tbReject	5	LAB_RESULT	dbDouble	8		Numerical portion of the analytical result, in units recorded in the units field, and as qualified by the qualifier recorded in the qual field.
tbReject	6	QUAL	dbText	5		Qualifier portion of analytical result. Non-detected results generally include a "U" in the qualifier. See tbQualifier for valid values.
tbReject	7	OUR_RESULT	dbText	15		Combination of LAB_RESULT (to correct significant figures) & " " & QUAL. For reporting.

Table 6-2 Field Definitions, EPA Electronic Data Submission						
tbReject	8	UNITS	dbText	5		See tbUnits for valid values.
tbReject	9	CASE	dbText	5		In CLP program, identifies samples sent to a laboratory over a specific period of time.
tbReject	10	SDG	dbText	15		Sample Delivery Group. In CLP and DAS analyses, SDGs are groups of up to 20 samples that are reported together in one data package. The SDG is set to the first (alphabetically) EPASAMNO in the SDG.
tbReject	11	LABORATORY	dbText	25		Name of the laboratory.
tbReject	12	LAB_ID	dbText	15		Laboratory Identification Number. Used internally by the laboratory to identify the sample.
tbReject	13	REC_DATE	dbDate	8		Date a sample is received by the laboratory.
tbReject	14	EXTR_DATE	dbDate	8		Date sample was extracted or prepared for analysis by the laboratory.
tbReject	15	ANAL_DATE	dbDate	8		Date the sample was analyzed by the laboratory.
tbReject	16	METHOD	dbText	50		Analytical method used, as reported by the laboratory.
tbReject	17	MDL	dbDouble	8	0	Method Detection Limit as reported by the laboratory.
tbReject	18	IDL	dbDouble	8		Instrument Detection Limit.
tbReject	19	CRDL_CRQL	dbDouble	8		Contract Required Detection Limit or Contract Required Quantitation Limit.
tbReject	20	DIL_FACTOR	dbDouble	8		Dilution factor.
tbReject	21	PCT_MOIST	dbDouble	8		Percent Moisture.
tbReject	22	COMMENTS	dbText	20		Optional additional information.
tbReject	23	DATASET	dbText	75		Combination of Case, SDG, Fraction, and Units fields. Used to group analytical results for reporting.
tbReject	24	VALIDATED	dbBoolean	1		Valid values are True and False.
tbReject	25	DATEAPPENDED	dbDate	8	=Now()	Date record was appended to this table.
tbReject	26	DVTIER	dbInteger	2	0	Level of Data Validation. Valid values are 1 (cursory), 2 (moderately rigorous), 3 (rigorous).
tbResultsLabAnal	1	NSAMPLE	dbText	30		Unique sample number as recorded in the sample station or location column in the Chain of Custody. Combination of abbreviations of some of the following fields: site, aoc, ou, matrix, boring, depth, samp_date, and filtered.
tbResultsLabAnal	2	FRACTION	dbText	15		Analysis code. See tbFraction for valid values.
tbResultsLabAnal	3	PARAMETER	dbText	45		Chemical name used in this database for a particular CAS

Table 6-2
Field Definitions, EPA Electronic Data Submission

						number.
tbResultsLabAnal	4	EPASAMNO	dbText	15		CLP traffic report number or Delivery of Analytical Services (DAS) number. Used by laboratory to report results. Lab appends suffix of "DL" or "RE" to the EPASAMNO to identify dilutions and reanalyses.
tbResultsLabAnal	5	CASNO	dbText	50		Chemical Abstracts Service number, without dashes.
tbResultsLabAnal	6	LAB_RESULT	dbDouble	8		Numerical portion of the analytical result, in units recorded in the units field, and as qualified by the qualifier recorded in the qual field.
tbResultsLabAnal	7	QUAL	dbText	5		Qualifier portion of analytical result. Non-detected results generally include a "U" in the qualifier. See tbQualifier for valid values.
tbResultsLabAnal	8	OUR_RESULT	dbText	15		Combination of LAB_RESULT (to correct significant figures) & " " & QUAL. For reporting.
tbResultsLabAnal	9	UNITS	dbText	10		See tbUnits for valid values.
tbResultsLabAnal	10	CASE	dbText	5		In CLP program, identifies samples sent to a laboratory over a specific period of time.
tbResultsLabAnal	11	SDG	dbText	15		Sample Delivery Group. In CLP and DAS analyses, SDGs are groups of up to 20 samples that are reported together in one data package. The SDG is set to the first (alphabetically) EPASAMNO in the SDG.
tbResultsLabAnal	12	LABORATORY	dbText	25		Name of the laboratory.
tbResultsLabAnal	13	LAB_ID	dbText	15		Laboratory Identification Number. Used internally by the laboratory to identify the sample.
tbResultsLabAnal	14	REC_DATE	dbDate	8		Date a sample is received by the laboratory.
tbResultsLabAnal	15	EXTR_DATE	dbDate	8		Date sample was extracted or prepared for analysis by the laboratory.
tbResultsLabAnal	16	ANAL_DATE	dbDate	8		Date the sample was analyzed by the laboratory.
tbResultsLabAnal	17	METHOD	dbText	50		Analytical method used, as reported by the laboratory.
tbResultsLabAnal	18	MDL	dbDouble	8	0	Method Detection Limit as reported by the laboratory.
tbResultsLabAnal	19	IDL	dbDouble	8		Instrument Detection Limit.
tbResultsLabAnal	20	CRDL_CRQL	dbDouble	8		Contract Required Detection Limit or Contract Required Quantitation Limit.
tbResultsLabAnal	21	DIL_FACTOR	dbDouble	8		Dilution factor.
tbResultsLabAnal	22	PCT_MOIST	dbDouble	8		Percent Moisture.

Table 6-2
Field Definitions, EPA Electronic Data Submission

tbResultsLabAnal	23	COMMENTS	dbText	20		Optional additional information.
tbResultsLabAnal	24	DATASET	dbText	75		Combination of Case, SDG, Fraction, and Units fields. Used to group analytical results for reporting.
tbResultsLabAnal	25	VALIDATED	dbBoolean	1		Valid values are True and False.
tbResultsLabAnal	26	DATEAPPENDED	dbDate	8	=Now()	Date record was appended to this table.
tbResultsLabAnal	27	DVTIER	dbInteger	2	0	Level of Data Validation. Valid values are 1 (cursory), 2 (moderately rigorous), 3 (rigorous).
tbResultsLabAnalQC	0	NSAMPLE	dbText	30		Unique sample number as recorded in the sample station or location column in the Chain of Custody. Combination of abbreviations of some of the following fields: site, aoc, ou, matrix, boring, depth, samp_date, and filtered.
tbResultsLabAnalQC	1	FRACTION	dbText	5		Analysis code. See tbFraction for valid values.
tbResultsLabAnalQC	2	PARAMETER	dbText	45		Chemical name used in this database for a particular CAS number.
tbResultsLabAnalQC	3	EPASAMNO	dbText	12		CLP traffic report number or Delivery of Analytical Services (DAS) number. Used by laboratory to report results. Lab appends suffix of "DL" or "RE" to the EPASAMNO to identify dilutions and reanalyses.
tbResultsLabAnalQC	4	CASNO	dbText	50		Chemical Abstracts Service number, without dashes.
tbResultsLabAnalQC	5	LAB_RESULT	dbDouble	8		Numerical portion of the analytical result, in units recorded in the units field, and as qualified by the qualifier recorded in the qual field.
tbResultsLabAnalQC	6	QUAL	dbText	5		Qualifier portion of analytical result. Non-detected results generally include a "U" in the qualifier. See tbQualifier for valid values.
tbResultsLabAnalQC	7	OUR_RESULT	dbText	15		Combination of LAB_RESULT (to correct significant figures) & " " & QUAL. For reporting.
tbResultsLabAnalQC	8	UNITS	dbText	5		See tbUnits for valid values.
tbResultsLabAnalQC	9	CASE	dbText	5		In CLP program, identifies samples sent to a laboratory over a specific period of time.
tbResultsLabAnalQC	10	SDG	dbText	15		Sample Delivery Group. In CLP and DAS analyses, SDGs are groups of up to 20 samples that are reported together in one data package. The SDG is set to the first (alphabetically) EPASAMNO in the SDG.
tbResultsLabAnalQC	11	LABORATORY	dbText	25		Name of the laboratory.

Table 6-2 Field Definitions, EPA Electronic Data Submission						
tbResultsLabAnalQC	12	LAB_ID	dbText	15		Laboratory Identification Number. Used internally by the laboratory to identify the sample.
tbResultsLabAnalQC	13	REC_DATE	dbDate	8		Date a sample is received by the laboratory.
tbResultsLabAnalQC	14	EXTR_DATE	dbDate	8		Date sample was extracted or prepared for analysis by the laboratory.
tbResultsLabAnalQC	15	ANAL_DATE	dbDate	8		Date the sample was analyzed by the laboratory.
tbResultsLabAnalQC	16	METHOD	dbText	50		Analytical method used, as reported by the laboratory.
tbResultsLabAnalQC	17	MDL	dbDouble	8	0	Method Detection Limit as reported by the laboratory.
tbResultsLabAnalQC	18	IDL	dbDouble	8		Instrument Detection Limit.
tbResultsLabAnalQC	19	CRDL_CRQL	dbDouble	8		Contract Required Detection Limit or Contract Required Quantitation Limit.
tbResultsLabAnalQC	20	DIL_FACTOR	dbDouble	8		Dilution factor.
tbResultsLabAnalQC	21	PCT_MOIST	dbDouble	8		Percent Moisture.
tbResultsLabAnalQC	22	COMMENTS	dbText	20		Optional additional information.
tbResultsLabAnalQC	23	DATASET	dbText	75		Combination of Case, SDG, Fraction, and Units fields. Used to group analytical results for reporting.
tbResultsLabAnalQC	24	VALIDATED	dbBoolean	1		Valid values are True and False.
tbResultsLabAnalQC	25	DATEAPPENDED	dbDate	8	=Now()	Date record was appended to this table.
tbResultsLabAnalQC	26	DVTIER	dbInteger	2	0	Level of Data Validation. Valid values are 1 (cursory), 2 (moderately rigorous), 3 (rigorous).
tbSample	1	EPASAMNO	dbText	30		CLP traffic report number or Delivery of Analytical Services (DAS) number. Used by laboratory to report results. Lab appends suffix of "DL" or "RE" to the EPASAMNO to identify dilutions and reanalyses.
tbSample	2	NSAMPLE	dbText	30		Unique sample number as recorded in the sample station or location column in the Chain of Custody. Combination of abbreviations of some of the following fields: site, aoc, ou, matrix, boring, depth, samp_date, and filtered.
tbSort	1	FRACTION	dbText	50		Analysis code. See tbFraction for valid values.
tbSort	2	DVSORT	dbDouble	8	0	Chemical sort order for reporting purposes.
tbSort	3	PARAMETER	dbText	45		Chemical name used in this database for a particular CAS number. Valid values for parameter field in tbresultslabanal.
tbSort	4	CASNO	dbText	11		Chemical Abstracts Service number, without dashes. Valid values for casno field in tbresultslabanal.

Table 6-2 Field Definitions, EPA Electronic Data Submission						
tbSort	5	DASHEDCASNO	dbText	50		CAS number with dashes included.
tbSort	6	ALIAS1	dbText	50		Potential alias for a particular CAS number.
tbSort	7	ALIAS2	dbText	50		Potential alias for a particular CAS number.
tbSort	8	ALIAS3	dbText	50		Potential alias for a particular CAS number.
tbSort	9	ALIAS4	dbText	50		Potential alias for a particular CAS number.
tbSort	10	DVSORT1	dbDouble	8	0	Chemical sort order for reporting purposes.
tbSort	11	DVSORT2	dbDouble	8	0	Chemical sort order for reporting purposes.
tbSort	12	DVSORT3	dbDouble	8	0	Chemical sort order for reporting purposes.
tbSort	13	DVSORT4	dbDouble	8	0	Chemical sort order for reporting purposes.
tbSort	14	DVSORT5	dbDouble	8	0	Chemical sort order for reporting purposes.
tbSort	15	DVSORT6	dbDouble	8	0	Chemical sort order for reporting purposes.
tbSort	16	DVSORT7	dbDouble	8	0	Chemical sort order for reporting purposes.
tbSort	17	DVSORT8	dbDouble	8	0	Chemical sort order for reporting purposes.
tbSort	18	DVSORT9	dbDouble	8	0	Chemical sort order for reporting purposes.
tbSort	19	DVSORT10	dbDouble	8	0	Chemical sort order for reporting purposes.
tbSort	20	DVSORT11	dbDouble	8	0	Chemical sort order for reporting purposes.
tbSort	21	DVSORT12	dbDouble	8	0	Chemical sort order for reporting purposes.
tbSort	22	DVSORT13	dbDouble	8	0	Chemical sort order for reporting purposes.
tbSort	23	DVSORT14	dbDouble	8	0	Chemical sort order for reporting purposes.
tbSort	24	DVSORT15	dbDouble	8	0	Chemical sort order for reporting purposes.
tbSort	25	DVSORT16	dbDouble	8	0	Chemical sort order for reporting purposes.
tbSort	26	DVSORT17	dbDouble	8	0	Chemical sort order for reporting purposes.
tbSort	27	DVSORT18	dbDouble	8	0	Chemical sort order for reporting purposes.
tbSort	28	DVSORT19	dbDouble	8	0	Chemical sort order for reporting purposes.
tbSort	29	DVSORT20	dbDouble	8	0	Chemical sort order for reporting purposes.
tbSort	30	DVSORT21	dbDouble	8	0	Chemical sort order for reporting purposes.
tbSort	31	DVSORT22	dbDouble	8	0	Chemical sort order for reporting purposes.
tbSort	32	METHOD	dbText	50		Analytical method used, as reported by the laboratory.
tbSort	33	ANALYSIS	dbText	50		Verbose description of Fraction field.
tbSort	34	COMMENT	dbText	50		Optional additional information.
tbSort	35	NEATPARAMETER	dbText	50		Chemical name for a particular CAS number with punctuation removed. This field is used very infrequently.

Table 6-2 Field Definitions, EPA Electronic Data Submission						
tbSort	36	PARAGROUP	dbText	50		Used to group parameters for reporting and risk assessment purposes.
tbSort	37	PARAPITTSBURGH	dbText	50		Chemical name used by TTNUS Pittsburgh office for a particular CAS number. For interoperability.
tbSort	38	DATEADDED	dbDate	8	=Now()	Date record was added to this table.
tbSort	39	EPADICTCODE	dbText	50		Shortened chemical name sometimes used by EPA for this particular CAS number. This field is used very infrequently.
tbSort	40	PCBNO	dbText	50		Numeric portion of PCB name (e.g. for PCB 87, this field stores the value 87). This field is used very infrequently.
tbUnits	1	FRACTION	dbText	15		Analysis code. See tbFraction for valid values.
tbUnits	2	UNITS	dbText	10		Valid values for units field in tbresultslabanal.
Well_Sample_Data	1	NSAMPLE	dbText	30		Unique sample number as recorded in the sample station or location column in the Chain of Custody. Combination of abbreviations of some of the following fields: site, aoc, ou, matrix, boring, depth, samp_date, and filtered.
Well_Sample_Data	2	QC_TYPE	dbText	50	"None"	Used to identify field QC samples. Valid values are "Field Dup. " & NSAMPLE of duplicated sample; "PE", "Trip Blank", and "Rinsate Blank"
Well_Sample_Data	3	SACODE	dbText	10	"NORMAL"	Sample Code. Used to identify field duplicates, averages, and maximums. Valid values are "Normal" (not duplicated), "Dup1" (duplicated), "Dup2" (duplicate), "AVG" (average of duplicated and duplicate), "MAX" (maximum of duplicated and duplicate).
Well_Sample_Data	4	SAMP_DATE	dbDate	8		Date sample was collected.
Well_Sample_Data	5	MATRIX	dbText	50		Physical state of the sample. See tbMatrix for valid values.
Well_Sample_Data	6	SPECIES	dbText	50		Used where matrix = "Biota" to indicate the species.
Well_Sample_Data	7	TISSUETYPE	dbText	25		Used where matrix = "Biota" to specify the type of tissue collected.
Well_Sample_Data	8	BORING	dbText	15		General name given to a sample location at a particular northing and easting (e.g. SB01). Several nsamples may have the same boring (e.g. soil samples collected from the same location at different depths).
Well_Sample_Data	9	NORTHING	dbDouble	8	0	State plane coordinate (NAD 1983) of boring.
Well_Sample_Data	10	EASTING	dbDouble	8	0	State plane coordinate (NAD 1983) of boring.

Table 6-2 Field Definitions, EPA Electronic Data Submission						
Well_Sample_Data	11	ELEVATION	dbDouble	8	0	In feet (NGVD 1929).
Well_Sample_Data	12	TOP	dbDouble	8	0	Top of sample interval in feet. Applicable to soil and sediment samples.
Well_Sample_Data	13	BOTTOM	dbDouble	8	0	Bottom of sample interval in feet. Applicable to soil and sediment samples.
Well_Sample_Data	14	DEPCODE	dbText	50		Used to group soil and sediment samples based on sample depth. "a" = surface, "b" = subsurface.
Well_Sample_Data	15	OU	dbText	50		Operable Unit.
Well_Sample_Data	16	AOC	dbText	50		Area Of Concern. Used to group samples, usually geographically.
Well_Sample_Data	17	DATEAPPENDED	dbDate	8	=Now()	Date record was appended to this table.
Well_Sample_Data	18	DATASOURCE	dbText	50		Generally the name of a prime contractor responsible for collection of the sample.
Well_Sample_Data	19	SUBMATRIX	dbText	20		Used to group samples for risk assessment purposes.
Well_Sample_Data	20	FILTERED	dbText	100		Used to indicate whether a water sample was filtered in the field. Valid values are "Filtered" and "Unfiltered."
Well_Sample_Data	21	MATRIX_GENERAL	dbText	50		Used to group samples for risk assessment purposes.
Well_Sample_Data	22	WRECEPTOR	dbText	100		Used to group samples for risk assessment purposes.

TABLE 7-1

Non-Time Critical Removal Action ARARs

Centredale Manor Restoration Superfund Site
North Providence, Rhode Island

AUTHORITY	REQUIREMENT	STATUS	REQUIREMENT SYNOPSIS	ACTION TO BE TAKEN TO ATTAIN ARAR
Federal Regulatory Requirements	Protection of Wetlands (Executive Order 11990), 40CFR 6.302(a) and Statement of procedures on Floodplain Management and Wetlands Protection (40 CFR 6, App. A)	Applicable	Federal agencies are required to avoid undertaking or providing assistance for new construction located in wetlands unless there is no practicable alternative and the proposed action includes all practicable measures to minimize harm to wetlands that may result from such use.	LEA will provide soil erosion and sediment controls in accordance with the RI Soil Erosion and Sediment Control Handbook and as identified in the 100% Design documents to minimize any potential erosion that may impact the wetlands further. In addition, LEA will disturb the least amount of area within the wetland and associated buffer to complete the removal activities. Restoration of the proposed action areas will be completed immediately upon confirmation that all material containing greater than 1 ppb dioxin is removed.
	Floodplain Management (Executive Order 11988-40 CFR 6.302(b) and Statement of procedures on Floodplain Management and Wetlands Protection (40 CFR 6, App. A)	Applicable	Federal agencies are required to avoid impacts associated with the occupancy and modification of a floodplain and avoid support of floodplain development wherever there is a practicable alternative.	LEA will disturb the least amount of area within the floodplain to complete the removal activities, and restoration of the proposed action areas will be completed as soon as possible.
	Rivers and Harbors Act (33 U.S.C. Section 403): Section 10	Applicable	These regulations set forth criteria from the Army Corps of Engineers (ACOE) for placing dams/structures in navigable waters of the United States.	LEA has provided, in the 100% design document, a modified design of a previous USACE dam design that incorporates the criteria requirements.

TABLE 7-1

Non-Time Critical Removal Action ARARs

Centredale Manor Restoration Superfund Site
North Providence, Rhode Island

AUTHORITY	REQUIREMENT	STATUS	REQUIREMENT SYNOPSIS	ACTION TO BE TAKEN TO ATTAIN ARAR
Federal Regulatory Requirements (con't)	Clean Water Act – Section 404(b)(1) Guidelines for specification of disposal sites for dredged or fill material (40 CFR part 230)	Applicable	These guidelines outline requirements for the discharge of dredged or fill materials into surface waters, including wetlands. Under these requirements, no activity that adversely impacts a wetland shall be permitted if a practicable alternative that would have less adverse impact exists. If there is no practicable alternative, impacts must be mitigated.	The SOW requires the Performing Parties to restore the Site to its previous elevation, therefore clean fill will be placed into an area that will be inundated with surface water with the restoration of Allendale Dam or into a dewatered excavation on the bank of Lymansville Pond. Placement of the fill will be performed to minimize the impacts of the surface water by maintaining a low water level in Allendale Pond during the removal activities and maintaining a barrier between the excavation and the surface waters associated with Lymansville Pond during backfilling operations.
	40 CFR 264.170 – 178 – Subpart I – Use and Management of Containers	Applicable	These regulations identify the requirements for the use and management of containers containing hazardous waste.	Soil will be loaded into roll-off containers provided with 6-mil plastic liners and bowed tarpaulins that completely cover each roll-off container preventing precipitation from accumulating on or in the roll-off container. Each roll-off will be labeled as hazardous waste and a starting date for loading must be provided on the label. Each 55-gallon drum must be closed after liquid is placed, labeled as hazardous waste and dated.
	40 CFR 265.1087 – Subpart CC – Air Emission Standards for Tanks, Surface Impoundments and Containers	Applicable	This subpart establishes controls on airborne emissions from tanks, surface impoundments and containers.	Each container shall remain in a closed, sealed position at all times that hazardous waste is in the container, except when waste is being added, removed, or inspected.

TABLE 7-1

Non-Time Critical Removal Action ARARs

Centredale Manor Restoration Superfund Site
North Providence, Rhode Island

AUTHORITY	REQUIREMENT	STATUS	REQUIREMENT SYNOPSIS	ACTION TO BE TAKEN TO ATTAIN ARAR
Federal Regulatory Requirements (Con't.)	49 CFR 262 – Subpart E - Export of Hazardous Waste	Applicable	This Subpart provides the procedures required to properly export waste for disposal including the proper notification to the EPA and Canadian Ministry, the special manifesting requirements, the reporting requirements and record keeping.	The Performing Parties, with the assistance of a representative from the selected disposal vendor, will be responsible for complying with the notification and manifest requirements of the Subpart. Certificates of Disposal will be provided to confirm that the soil and sediment has been properly disposed.
State Regulatory Requirements	Hazardous Waste Management Act (RI General Laws 23-19.1-6, 23-19.1-7, and 23-19.1-10): Section 5, Generators	Applicable	These regulations apply to all generators of hazardous waste. They include requirements for identification, storage, shipment and labeling or waste.	A generator may accumulate hazardous waste on-site for 90 days or less provided containment, inspection, and documentation complies with the federal regulations 40 CFR 262.34 and 264.175. Generators must identify the use and management of containers required while storing the waste.
	Remediation Regulations DEM-DSR-01-93 Section 8.01, A to D.	Relevant and Appropriate	This section regulates impacted media at contaminated sites.	Soil containing greater than 1 ppb of dioxin (in TEQs) will be excavated and disposed from the Site.
	RI Air Pollution Control Regulation #5, Fugitive Dust	Applicable	Regulations designed to control releases of airborne particulate in the State of Rhode Island, including those caused by earth moving activities.	Field personnel and drivers will remove any soil from the tires of all trucks prior to exiting the Site onto public roadways. Dirt that does accumulate on roadways will be immediately swept from asphalt surfaces. In the event, that these measures are not sufficient to prevent fugitive dust emissions, a water truck will be provided to wet areas of bare earth and street.

TABLE 7-1

Non-Time Critical Removal Action ARARs

Centredale Manor Restoration Superfund Site
North Providence, Rhode Island

AUTHORITY	REQUIREMENT	STATUS	REQUIREMENT SYNOPSIS	ACTION TO BE TAKEN TO ATTAIN ARAR
State Regulatory Requirements	Freshwater Wetlands Act (RI Gen. Laws 2-1-18 through 2-1-24); Rule #10, Protection of Wetlands Functions and Values	Applicable	Any activity which alters a wetland must avoid all probable impact to freshwater wetlands to the maximum extent possible. If impacts cannot be avoided, they must be reduced to the maximum extent possible.	LEA will provide soil erosion and sediment controls in accordance with the RI Soil Erosion and Sediment Control Handbook and as identified in the 100% Design documents to minimize any potential erosion that may impact the wetlands further. In addition, LEA will disturb the least amount of area within the wetland and associated buffer to complete the removal activities. Restoration of the proposed action areas will be completed immediately upon confirmation that all material containing greater than 1 ppb dioxin is removed.

TABLE 10-1

Submittal and Testing Summary

Centredale Manor Restoration Superfund Site
North Providence, Rhode Island

MATERIAL	SPECIFICATION PARAGRAPH	FREQUENCY	SUBMITTAL OR TEST METHOD	PERSON RESPONSIBLE FOR THE TEST
Alternate Construction Sequence and Water Control Scheme	Section 01010 – 1.3	Prior to commencing work	Alternate Construction Sequence and Water Control Scheme	Contractor
Pre-Construction Photographic Survey	Section 01010 – 1.3	Prior to commencing work	Pre-Construction Photographic Survey	Contractor
Progress Schedule	Section 01010 – 1.3	Within five (5) days after receipt of notice to proceed	Submit for approval a practicable progress schedule	Contractor
As-Built Drawings	Section 01010 – 1.3	At the completion of work	As-built drawings showing all deviations from the contract drawings (See AS-BUILT DRAWINGS Section 01010 – 1.8))	Contractor
Temporary Electrical System	Section 01500 – 1.2	Prior to commencing work	Sketch of the proposed temporary electrical system	Contractor

TABLE 10-1

Submittal and Testing Summary

Centredale Manor Restoration Superfund Site
North Providence, Rhode Island

MATERIAL	SPECIFICATION PARAGRAPH	FREQUENCY	SUBMITTAL OR TEST METHOD	PERSON RESPONSIBLE FOR THE TEST
Temporary Electrical Equipment and Lines	Section 01500 - 1.2	Intervals not to exceed one (1) week	Inspections of systems and devices to conform to Article 305 of NFPA 70	Contractor
Gravel Fill Material	Section 02227 – 1.2	30 days prior to the initial placement of any gravel fill material	Submit the locations of proposed sources and the names of the processing firms	Contractor
Gravel Fill Material (50 pound bulk sample)	Section 02227 – 1.2	30 days prior to the initial placement of any gravel fill	ASTM C 127 Section 02278 STONE PROTECTION	Contractor will deliver sample to the Government's laboratory
Gravel Bedding	Section 02278 – 1.3	1 per each type	ASTM D 422 – Gradation Characteristics	Contractor will deliver sample to the Government's laboratory
Design Details and Calculations	Section 02403 – 1.2	Prior to commencing the work	Design Details and Calculations	Contractor will engage a Registered Professional Engineer
Alternate Construction Sequence and Water Control Scheme	Section 02403 – 1.3	Submit as necessary	Alternate Construction Sequence and Water Control Scheme	Contractor
Cofferdams	Section 02403 – 3.4	Continuously	Monitor for movement, erosion, deterioration and excessive seepage.	Contractor
Seed Mixture	Section 02935 – 1.2	Prior to the delivery of materials.	% pure live seed, minimum % germination and hard seed, maximum % weed content, date tested and state certification	Contractor will supply a Certificate of compliance.

TABLE 10-1

Submittal and Testing Summary

Centredale Manor Restoration Superfund Site
North Providence, Rhode Island

MATERIAL	SPECIFICATION PARAGRAPH	FREQUENCY	SUBMITTAL OR TEST METHOD	PERSON RESPONSIBLE FOR THE TEST
Fertilizer	Section 02935 –1.2	Prior to the delivery of materials.	Chemical analysis, composition percent	Contractor will supply a Certificate of compliance.
Agricultural Limestone	Section 02935 – 1.2	Prior to delivery of materials	Calcium carbonate equivalent and sieve analysis	Contractor will supply a Certificate of compliance.
Peat	Section 02935 – 1.2	Prior to delivery of materials	Compliance with ASTM D 2607	Contractor will supply a Certificate of compliance.
Pesticide Material	Section 02935 – 1.2	Prior to delivery of materials	EPA registration number and registered uses.	Contractor will supply a Certificate of compliance.
Topsoil	Section 02935 – 1.2	Prior to delivery of materials	pH, particle size, chemical analysis and mechanical analysis	Contractor will supply a Certificate of compliance.
Soil Amendments	Section 02935 – 3.2.2.1	Prior to delivery of materials	pH, chemical analysis and mechanical analysis	Contractor
Turfing Equipment	Section 02935 – 3.3.2	Immediately prior to commencement of turfing operations	Calibration tests	Contractor
Turf	Section 02935 – 3.11.1	Prior to the completion of the Turf Establishment Period	Preliminary inspection	Contracting Officer
Turf	Section 02935 – 3.11.2	Prior to the completion of the Turf Establishment Period	Final inspection	Contracting Officer

TABLE 10-1

Submittal and Testing Summary

Centredale Manor Restoration Superfund Site
North Providence, Rhode Island

MATERIAL	SPECIFICATION PARAGRAPH	FREQUENCY	SUBMITTAL OR TEST METHOD	PERSON RESPONSIBLE FOR THE TEST
Portland cement, blended cement, pozzolan, ground granulated blast furnace slag, silica fume, aggregate, admixtures, and curing compound.	Section 03300 – 1.2	Prior to delivery of materials	Certified copies of laboratory test, including mill tests and all other test data	Contractor
Mixture Proportions of Concrete	Section 03300	At least 14 days prior to commencing concrete placing operations	Results of trial mixture design studies from an independent laboratory, a statement giving the maximum nominal coarse aggregate size and the proportions of ingredients that will be used in the manufacture of concrete.	Contractor
Vibrators	Section 03300 – 3.17.8	Prior to initial use and at least once a month when concrete is being placed	Frequency and amplitude in accordance with CRD-C 521 shall be reported in writing	Contractor
Foundations, construction joints, forms, and embedded items.	Section 03300 – 3.17.6	Prior to each concrete placement	Inspection and written report	Contractor

TABLE 10-1

Submittal and Testing Summary

Centredale Manor Restoration Superfund Site
North Providence, Rhode Island

MATERIAL	SPECIFICATION PARAGRAPH	FREQUENCY	SUBMITTAL OR TEST METHOD	PERSON RESPONSIBLE FOR THE TEST
Polymer-Modified Repair Mortars	Section 03730 – 1.3	Prior to delivery of materials	Manufacturer's printed literature, component mixing instructions, and application instructions.	Contractor
Epoxy resin/portland cement corrosion inhibitor	Section 03730 – 1.3	Prior to delivery of materials	Manufacturer's printed literature, component mixing instructions, and application instructions.	Contractor
Repair Mortars for Patching	Section 03730 – 1.3	Prior to delivery of materials	Certificate of compliance for each material proposed	Contractor
Granite Stone Cap	Section 04400 – 1.3	60 days prior to the materials being required in the work	Approval of Quality from the Government Laboratory	Contractor will deliver sample to the Government's laboratory
Existing Stone Wall Repair Plan	Section 04400 – 1.3	Prior to commencing the work	Existing Stone Wall Repair Plan	Contractor
Qualifications	Section 01050 – 1.3	Prior to commencing the work	Name and address of the Surveyor and Professional Engineer and proof of registration	Contractor
Environmental Protection Plan	SECTION 01430 – 1.4	Within 15 days after receipt of Notice of Award and 7 days prior to the Preconstruction Conference	Environmental Protection Plan	Contractor
Quality Assurance	Section 01430 – 1.9	After observed noncompliance of the EPP	Written notification of noncompliance	Contracting Officer will notify the Contractor

TABLE 10-1

Submittal and Testing Summary

Centredale Manor Restoration Superfund Site
North Providence, Rhode Island

MATERIAL	SPECIFICATION PARAGRAPH	FREQUENCY	SUBMITTAL OR TEST METHOD	PERSON RESPONSIBLE FOR THE TEST
MSDS	Section 01900 – 1.4	Before commencing the work	MSDS for all hazardous and toxic materials used	Contractor
Machinery Inspection Certification	Section 01900 – 1.4	Before commencing the work	Machinery Inspection Certification	Contractor
Accident Prevention Plan	Section 01900 – 1.4	Before commencing the work	Accident Prevention Plan	Contractor
Activity Hazard Analysis	Section 01900 – 1.4	Before commencing the work	Activity Hazard Analysis	Contractor
Safety Meeting Report	Section 01900 – 1.4	Within 3 days after each meeting	Safety Meeting Report	Contractor
Wood Dam Removal Plan	Section 02100 –1.3	Before commencing the work	Wood Dam Removal Plan	Contractor
Erosion and Sedimentation Control Plan	Section 02274 – 1.1	Before commencing the work	Erosion and Sedimentation Control Plan	Contractor
Manufacturer's Literature	Section 02935 – 1.2	Before turfing begins	Manufacturer's Literature for erosion control material and for chemical treatment material	Contractor
Equipment List	Section 02935 – 1.2	Before turfing begins	Equipment List	Contractor
Delivery Schedule	Section 02935 – 1.2	Before turfing begins	Delivery Schedule	Contractor
Application of Pesticides	Section 02935 – 1.2	Before turfing begins	Pesticide treatment plan	Contractor
Maintenance Report	Section 02935 – 1.2	Before turfing begins	Written record of maintenance performed	Contractor

TABLE 10-1

Submittal and Testing Summary

Centredale Manor Restoration Superfund Site
North Providence, Rhode Island

MATERIAL	SPECIFICATION PARAGRAPH	FREQUENCY	SUBMITTAL OR TEST METHOD	PERSON RESPONSIBLE FOR THE TEST
Turf Establishment Period	Section 02935 – 1.2	Before turfing begins	Written calendar time period for turf establishment	Contractor
Seed Inspection	Section 02935 – 1.4.2	Upon seeds arrival at job site	Inspected for conformity to type and quality	Contractor
Concrete Formwork Design	Section 03100 – 1.2	Before commencing the work	Design analysis and calculations	Contractor
Concrete Formwork	Section 03100 – 1.2	Before commencing the work	Manufacturer's data and drawings	Contractor
Textured Concrete Form Liner	Section 03100 – 1.2	Before commencing the work	Manufacturer's data	Contractor
Form Releasing Agents	Section 03100 – 1.2	Before commencing the work	Manufacturer's data	Contractor
Concrete Reinforcement System	Section 03200 – 1.2	Before commencing the work	Detailed drawings	Contractor
Reinforcing Steel	Section 03200 –1.2	Prior to the installation of reinforcing steel	Certified copies of mill reports	Contractor
Preformed Compressible Joint Filler	Section 03250 – 1.2	Before commencing the work	Manufacturer's literature, including MSDSs, instructions for installation, and certificates of compliance	Contractor
Sealant	Section 03250 – 1.2	Before commencing the work	Manufacturer's literature, including MSDSs, instructions for installation, and certificates of compliance	Contractor

TABLE 10-1

Submittal and Testing Summary

Centredale Manor Restoration Superfund Site
North Providence, Rhode Island

MATERIAL	SPECIFICATION PARAGRAPH	FREQUENCY	SUBMITTAL OR TEST METHOD	PERSON RESPONSIBLE FOR THE TEST
Waterstops	Section 03250 – 1.2	Before commencing the work	Manufacturer's literature, including MSDSs, shop drawings, fabrication drawings, instructions for installation, and certificate of compliance	Contractor
PVC and Expanding Waterstops and Splices	Section 03250 – 1.2	Before commencing the work	Specimens indicating manufacturer, type of material, size, quantity of material, and shipment or lot represented.	Contractor
Wood Stop Logs	Section 06146 – 1.3	Before commencing the work	Submit manufacturer's "Certificate of Treatment"	Contractor
Map		Upon exposing the rock surface	Map indicating rock type, joint orientation and physical characteristics of the rock.	Engineering geologist
Rock core		Upon exposing the rock surface	20 foot rock core	Engineering geologist
Rock Bolts		30 days prior to beginning tunnel excavation	Type and details of rock bolts and accessories. Equipment and procedures for drilling rock bolt holes and rock bolt installation and testing. Materials, equipment and procedures for rock bolt grouting. Sequence of installation. Certification for all materials.	Contractor

TABLE 10-1

Submittal and Testing Summary

Centredale Manor Restoration Superfund Site
North Providence, Rhode Island

MATERIAL	SPECIFICATION PARAGRAPH	FREQUENCY	SUBMITTAL OR TEST METHOD	PERSON RESPONSIBLE FOR THE TEST
Daily record of rock bolt installation		Updated after each shift during rock bolt installation activity	Rock bolt installation plan or diagrams. Indicate beginning and end of rock bolt installation. Performance test results. Torque applied to each rock bolt.	Contractor shall maintain the records in the on-site office.
Rock Core Log(s)		At the completion of the rock cores	Submit rock core log provided by drilling contractor.	Contractor shall submit core and log to engineer and maintain the records in the on-site office
Rock Anchor Hole Drilling Logs		Complete for each hole	Submit all drilling logs to engineer	Contractor shall submit each log to the engineer and maintain the records in the on-site office
Pressure Test Results		At the completion of each pressure test	Submit pressure test results to engineer	Contractor shall provide pressure test results to engineer and maintain records in the field office
Pre-Grouting Results		Complete for each anchor installation	Submit pre-grouting test results to engineer	Records of each anchor hole shall be submitted to the engineer
Weekly summary report		Weekly during rock bolt installation activity	Rock bolt installation activity, up-to-date drawings, results of tests performed and notes shall be included	Contractor shall provide weekly summary report to the engineer.

TABLE 10-1

Submittal and Testing Summary

Centredale Manor Restoration Superfund Site
North Providence, Rhode Island

MATERIAL	SPECIFICATION PARAGRAPH	FREQUENCY	SUBMITTAL OR TEST METHOD	PERSON RESPONSIBLE FOR THE TEST
Sluice gate submittal	Section 01300	Prior to commencement of activities	Certificate(s) of compliance with applicable ASTM or AWWA standards. Design calculations for gate, lift, and stem sizing. Dimensional shop drawings. Manufacturer's data, literature, installation instructions, and operation and maintenance manual for the gates, stems, operators, and accessories.	Contractor
Letter from the manufacturer's representative	Section 01300	7 days after testing and approval are complete	Letter stating sluice gate installation was tested and approved by the manufacturer's representative.	Contractor
Sluice gate field testing	Section 01300	Upon completion of sluice gate installation	Operate the sluice gate through five complete cycles without sticking or binding. Measure the torque required to operate the gate.	Contractor shall include one day for the manufacturer's representative to check the installation and supervise testing and adjustment of the sluice gate.

FIGURES

SITE LOCATION

N

1000 0 1000 2000 3000

SCALE IN FEET

MAP REFERENCE:
USGS 7.5 MINUTE SERIES QUADRANGLES FOR PROVIDENCE, R.I.,
DATED 1957 AND REVISED 1975.

WORK PLAN
CENTREDALE MANOR SUPERFUND SITE

SITE LOCATION

Comm.No.		
15RP101.001	**FIGURE 1–1**	LEA

15RP101-F1-1.dwg
CENTERDALE.tif

G:\Autocad\PROJECTS\15RP101\15RP101-F1-1.dwg, 08/11/01 04:00:18 PM

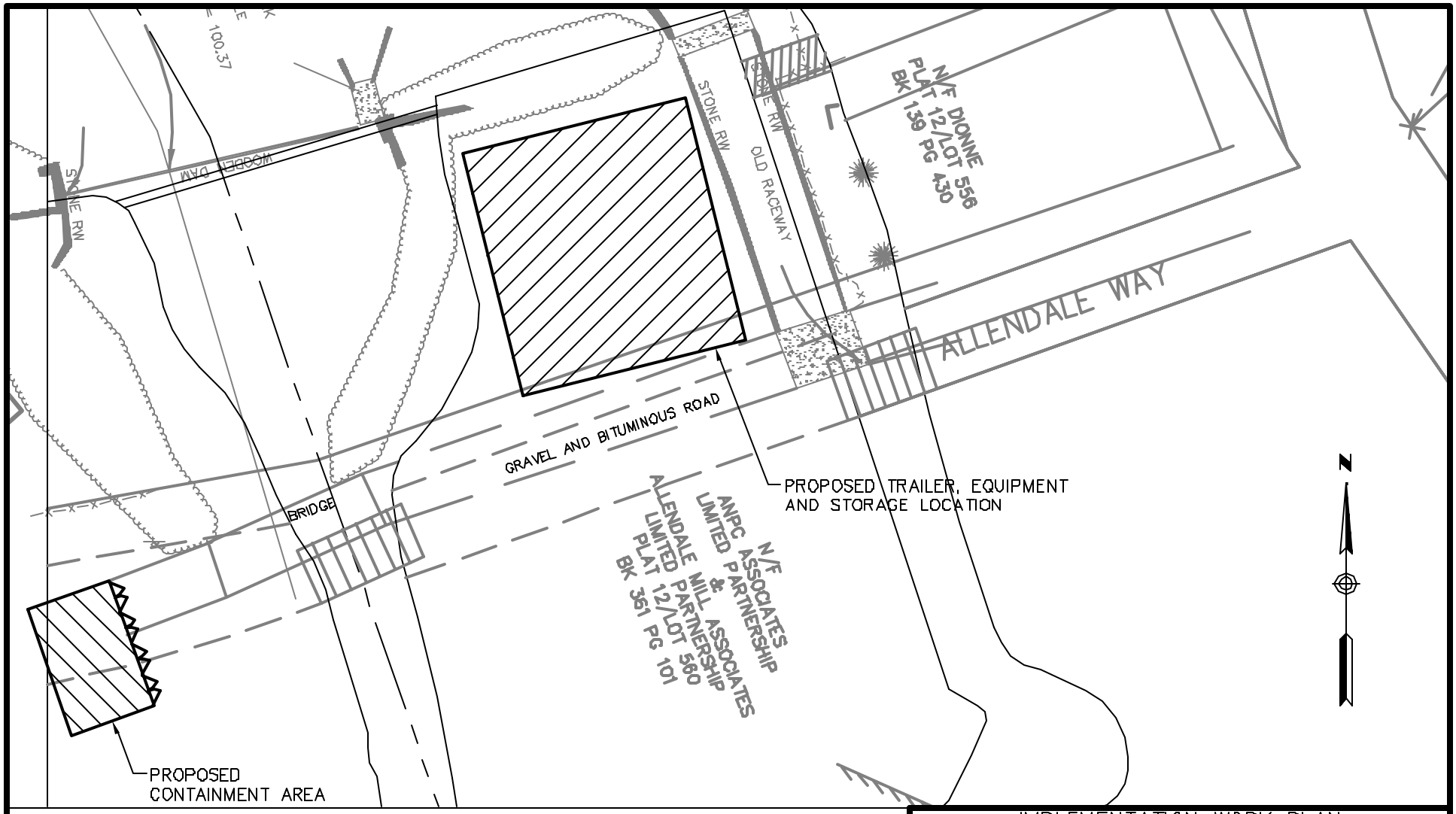

25 0 25 50 75

SCALE IN FEET

IMPLEMENTATION WORK PLAN

CENTREDALE MANOR SUPERFUND SITE, NORTH PROVIDENCE, R.I.

PROPOSED FIELD OFFICE AND STORAGE LOCATION

Comm.No.	FIGURE 3-1	LEA
15RP101		

15RP101-Fig3-1iwp

G:\Autocad\PROJECTS\15RP101\TASK001\15RP101-Fig3-1iwp.dwg, 08/11/01 03:58:01 PM

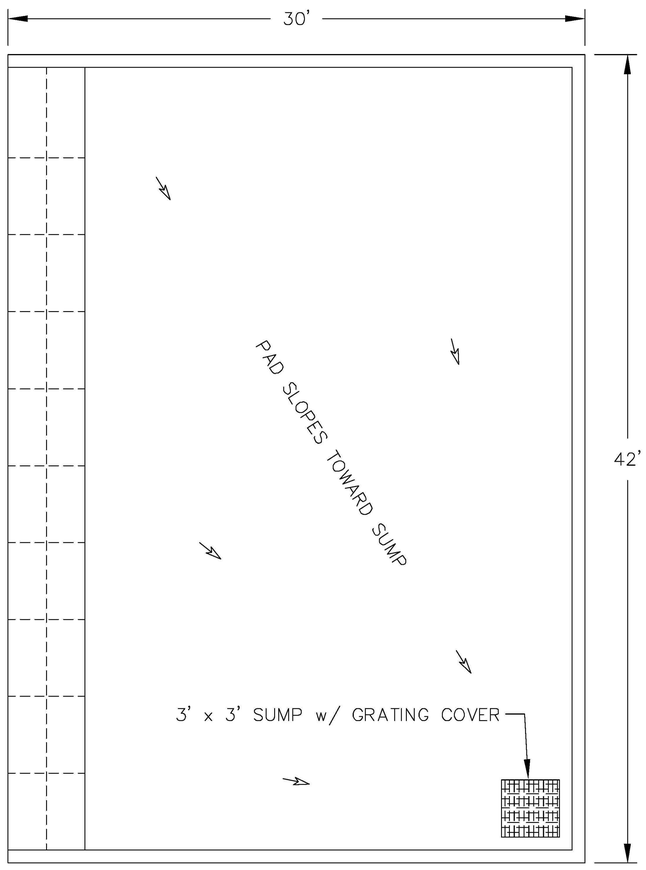

PLAN VIEW

SCALE 1/8" = 1'-0"

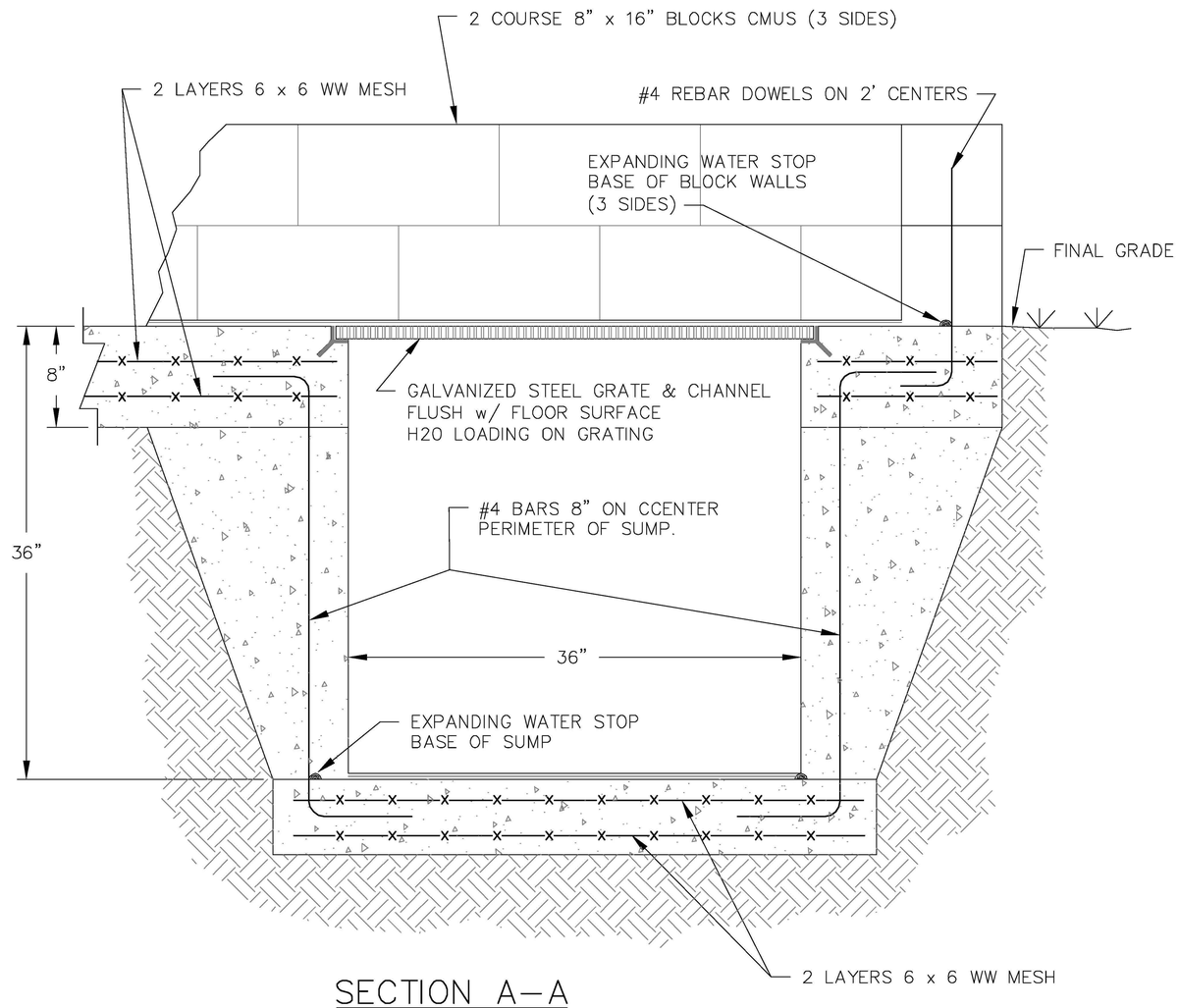

SECTION A–A

SCALE 1" = 1'-0"

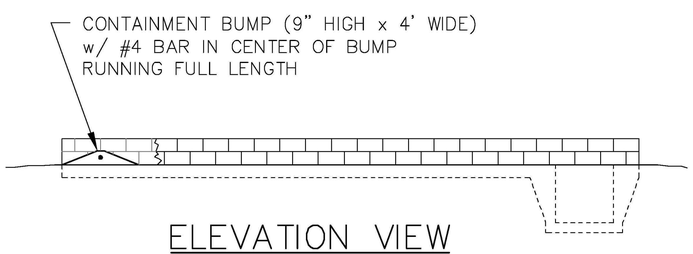

ELEVATION VIEW

SCALE 1/8" = 1'-0"

NOTES:

1. CONCRETE 4,000 PSI

2. BLOCK WALLS DOWELLED W/ BLOCK SPACES & POURED FULL.

CENTREDALE MANOR SUPERFUND SITE
NORTH PROVIDENCE, R.I.

ROLL–OFF CONTAINMENT PAD

Comm.No.		
15RP101	FIGURE 4–1	LEA

G:\Autocad\PROJECTS\15RP101\TASK001\15RP101-PAD.dwg, 08/11/01 03:51:17 PM

Figure 10-1

Preparation Phase Inspection Checklist

Centredale Manor Restoration Superfund Site
North Providence, Rhode Island

	In Progress	Completed
Review of each paragraph of applicable specifications		
Review of contract drawings		
All materials and/or equipment have been tested, submitted, and approved		
Provisions made to provide required control inspection and testing		
All preliminary work has been completed and is in compliance with the contract		
Required materials, equipment, and sample work are on hand.		
Required materials, equipment, and sample work conform to approved shop drawings or submitted data		
Required materials, equipment, and sample work are properly stored		
Review activity hazard analysis to assure safety requirements are met		
Discussion of procedures for controlling quality of the work, including repetitive deficiencies		
Document construction tolerances and workmanship standards		
Discussion of the initial control phase		

Figure 10-2

Initial Phase Inspection Checklist

Centredale Manor Restoration Superfund Site
North Providence, Rhode Island

	In Progress	Completed
Work is in full compliance with contract requirements		
Review minutes of the preparatory meeting		
Verify adequacy of controls to ensure full contract compliance		
Verify required control inspections and testing		
Establish level of workmanship that meets minimum acceptable workmanship standards		
Resolve all differences		
Check safety to include compliance with and upgrading of the safety plan and activity hazard analysis		
Review the activity hazard analysis with each worker		

Figure 10-3

Follow-Up Phase Inspection Checklist

Centredale Manor Restoration Superfund Site
North Providence, Rhode Island

	In Progress	Completed
Review minutes of the preparatory and initial meetings		
Daily checks performed and documented to assure compliance with the contract requirements		
Final follow-up check conducted		
All deficiencies corrected		

FIGURE 10-4

Job Hazard Analysis Form

Centredale Manor Restoration Superfund Site
North Providence, Rhode Island

JOB TITLE: DATE OF ANALYSIS:

JOB LOCATION:

STEP	HAZARD	CAUSE	PREVENTIVE MEASURE

FIGURE 10-4

Job Hazard Analysis Form

Centredale Manor Restoration Superfund Site
North Providence, Rhode Island

Figure 10-5

DAILY CONSTRUCTION QUALITY CONTROL REPORT

Date: _____
Day: _____
Contract No.: _____
Description and Location of Work: _____
_____

Weather: Temp:Cloud condition: Wind speed/direction _____
Environmental Protection:
Management Area of responsibility
a. Consultant - _____
b. Contractor - _____
c. Subcontractor - _____
d. Purveyor - _____
e. Supplier - _____
e. Technical Support - _____

1. WORK PERFORMED TODAY (Indicate location and description of work performed. Refer to work performed by individuals listed by letter above.)

_____
_____
_____
_____
_____

2. Results of Surveillance (Include satisfactory work completed, or deficiencies with action to be taken.)
a. Preparatory Inspection: _____
_____
_____
_____
b. Initial Inspection: _____
_____
_____
_____
c. Follow-up Inspection: _____
_____
_____
_____

3. Tests Required by Specifications, Performed, and the Results:
a. _____
b. _____
c. _____

4. Verbal Instruction Received; (List any instructions given by Government personnel on construction deficiencies, retesting required, etc. and action.)

_____
_____
_____
_____

Figure 10-5

5. Remarks: (cover all conflicts in plans, specifications, or instructions.)

_____
_____
_____
_____

6. Safety Inspection (Report violations, corrective instruction given; and corrective actions taken.)

_____
_____
_____
_____

7. Quantities Completed;

Item # Quantity:	Item # Quantity:
Item # Quantity:	Item # Quantity

8. Time

#	LABOR	HOURS	EQUIPMENT

9. Additional Comments:

_____
_____
_____
_____
_____

Contractor's Verification: The above report is complete and correct and all material and equipment used and work performed during this reporting period are in compliance with the contract plans and specifications except as noted above.

_____
Contractor Quality Control Representative

IMPLEMENTATION SCHEDULE - FALL SAMPLING
Centredale Manor Restoration Superfund Site
North Providence, Rhode Island

ID	Task Name	Duration
1	Submission of Implementation Work Plan, etc.	0 days
2	EPA Review and Comment of Submitted Plans	15 days
3	Perfoming Parties Comment Response	5 days
4	Preconstruction Meeting	1 day
5	**Site Preparation**	**30 days**
6	Surveying & Sample Location	20 days
7	Allendale Pond Clearing	10 days
8	**Additional Site Investigation**	**42 days**
9	Sample Collection	30 days
10	Sample transport and Immunoassay Analysis	30 days
11	Sample Analysis Review & Drawing Preparation	10 days
12	**Soil Excavation and Disposal**	**138 days**
13	Mobilization	3 days
14	Excavation Area location	3 days
15	Site Preparation	10 days
16	Sediment and Soil Excavation and Disposal	30 days
17	Sidewall Sample Collection	30 days
18	Sidewall Sample Transport and Analysis	30 days
19	Sample Validation	30 days
20	Analytical Results Review	10 days
21	Site Restoration	20 days
22	**Dam Reconstruction**	**193 days**
23	Construction of Replacement Dam	90 days
24	Soil and Sediment Excavation and Disposal	40 days
25	Site Restoration	10 days
26	Prepare and Submit Post-Removal Site Control Plan	120 days
27	Develop "Punch List"	15 days
28	Pre-Final Inspection	1 day
29	Final Inspection	1 day
30	Develop and Submit Completion of Work Report	45 days
31	EPA Review and Approval	15 days
32	Implement Post Removal Site Controls	10 days

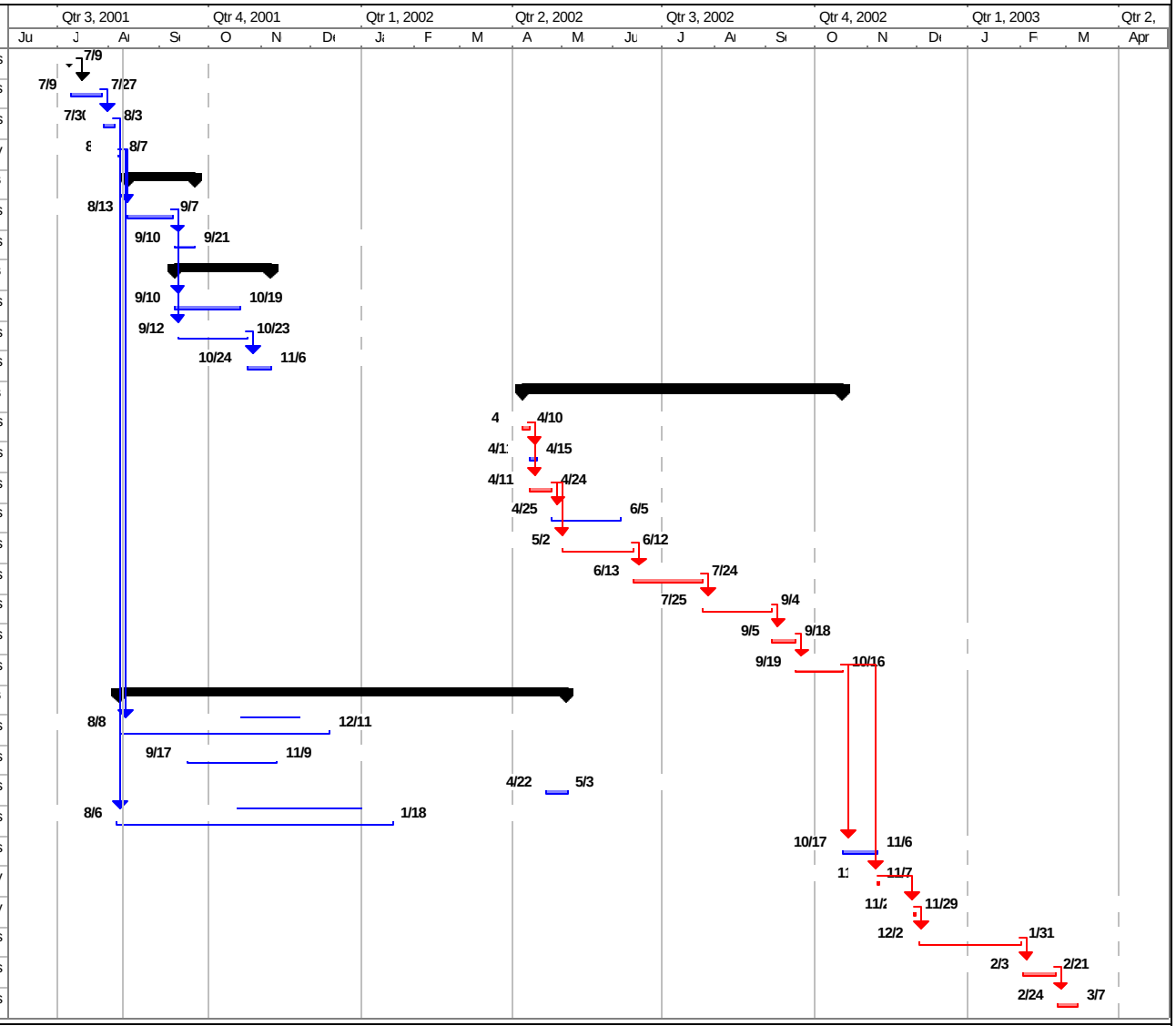

Project: Implementation Schedule - Fal
Date: Thu 8/9/01

Task	Summary	Rolled Up Progress	Group By Summary
Critical Task	Rolled Up Task	Split	
Progress	Rolled Up Critical Task	External Tasks	
Milestone	Rolled Up Milestone	Project Summary	

FIGURE 14-1

DRAWINGS

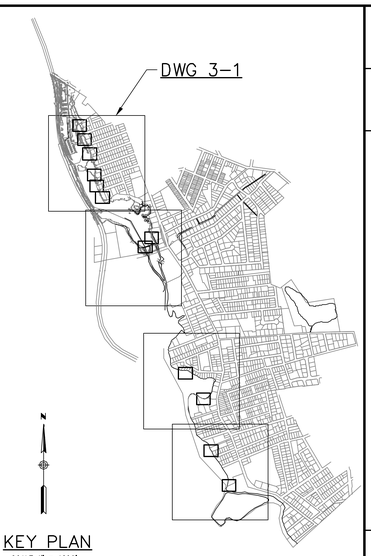

KEY PLAN

SCALE 1" = 1000'

LEGEND

▲ CMS-422	EXISTING SOIL SAMPLE, DIOXIN < 1 ppb
▲ CMS-456 (2100)	EXISTING SOIL SAMPLE, DIOXIN > 1 ppb (DIOXIN CONCENTRATION IN ppt)
◆ CMS-091	EXISTING SEDIMENT SAMPLE, DIOXIN < 1 ppb
◆ CMS-123 (2100)	EXISTING SEDIMENT SAMPLE, DIOXIN > 1 ppb (DIOXIN CONCENTRATION IN ppt)
△	PROPOSED EXCAVATION DELINEATION SAMPLE LOCATION
	AREA PROPOSED IN TTNUS EE/CA FOR EXCAVATION OF RESIDENTIAL USE SOIL
	AREA PROPOSED IN TTNUS EE/CA FOR EXCAVATION OF FLOOD PLAIN SEDIMENT
ppb	PARTS PER BILLION
ppt	PARTS PER TRILLION
	PLATS & LOTS WHERE ACCESS AGREEMENTS HAVE BEEN REQUESTED

NOTE: DOES NOT INCLUDE AREA OF ALLENDALE POND OWNED BY AMPC ASSOCIATES LIMITED PARTNERSHIP AND ALLENDALE MILL ASSOCIATES LIMITED PARTNERSHIP (PART OF PLAT 12/LOT 560)

REV.	DESCRIPTION OF REVISION	DATE	APPR

Loureiro Engineering Associates, Inc.
100 Northwest Drive • Plainville, Connecticut 06062
An Employee Owned Company

SCALE 1" = 50'
COMM. NO. 15RP101
DRAWN BY A.C.L. DATE 07/06/01
APP. BY S.A.M. DATE 07/06/01

CENTREDALE MANOR RESTORATION SUPERFUND SITE
NORTH PROVIDENCE, RHODE ISLAND
IMPLEMENTATION WORK PLAN
SITE PLAN

An Employee Owned Company

DRAWING 3-1

SHEET NO. 1 NO. OF SHEETS 1

15RP101-SITE.dwg

G:\Autocad\PROJECTS\15RP101\Base\15RP101-SITE.dwg, 08/11/01 04:29:26 PM

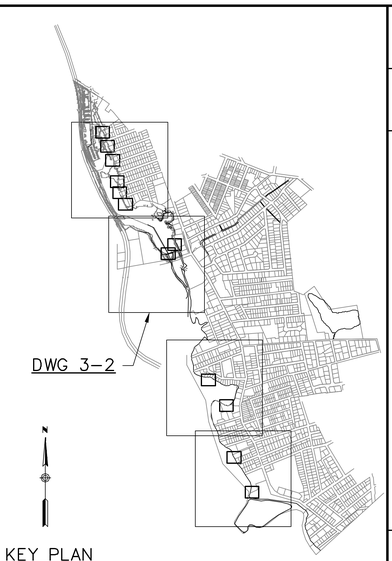

KEY PLAN

SCALE 1" = 1000'

LEGEND

▲ CMS-422	EXISTING SOIL SAMPLE, DIOXIN < 1 ppb
▲ CMS-456 (2100)	EXISTING SOIL SAMPLE, DIOXIN > 1 ppb (DIOXIN CONCENTRATION IN ppt)
◆ CMS-091	EXISTING SEDIMENT SAMPLE, DIOXIN < 1 ppb
◆ CMS-123 (2100)	EXISTING SEDIMENT SAMPLE, DIOXIN > 1 ppb (DIOXIN CONCENTRATION IN ppt)
△	PROPOSED EXCAVATION DELINEATION SAMPLE LOCATION
	AREA PROPOSED IN TTNUS EE/CA FOR EXCAVATION OF RESIDENTIAL USE SOIL
	AREA PROPOSED IN TTNUS EE/CA FOR EXCAVATION OF FLOOD PLAIN SEDIMENT
ppb	PARTS PER BILLION
ppt	PARTS PER TRILLION
	PLATS & LOTS WHERE ACCESS AGREEMENTS HAVE BEEN REQUESTED

NOTE: DOES NOT INCLUDE AREA OF ALLENDALE POND OWNED BY ANPC ASSOCIATES LIMITED PARTNERSHIP AND ALLENDALE MILL ASSOCIATES LIMITED PARTNERSHIP (PART OF PLAT 12/LOT 560)

REV.	DESCRIPTION OF REVISION	DATE	APPR

Loureiro Engineering Associates, Inc.
100 Northwest Drive • Plainville, Connecticut 06062
An Employee Owned Company

SCALE 1" = 50'
COMM. NO. 15RP101
DRAWN BY A.C.L. DATE 07/02/01
APP. BY S.A.M. DATE 07/02/01

CENTREDALE MANOR RESTORATION SUPERFUND SITE
NORTH PROVIDENCE, RHODE ISLAND
IMPLEMENTATION WORK PLAN
SITE PLAN

An Employee Owned Company

DRAWING 3-2

SHEET NO. 1 NO. OF SHEETS 1

15RP101-SITE.dwg

C:\AutoCAD\PROJECTS\15RP101\Base\15RP101-SITE.dwg, 08/11/01 04:33:08 PM

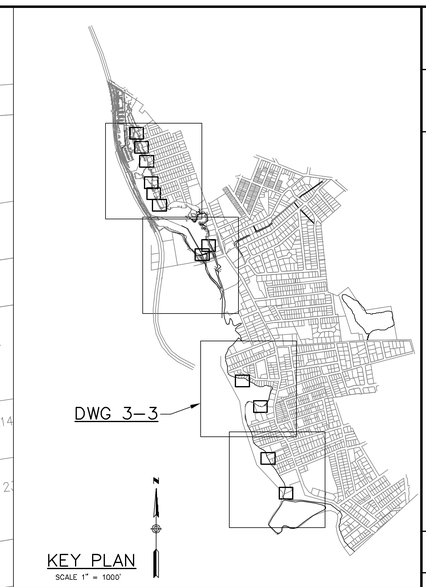

KEY PLAN
SCALE 1" = 1000'

LEGEND

- ▲ CMS-422 EXISTING SOIL SAMPLE, DIOXIN < 1 ppb
- ▲ CMS-456 (2100) EXISTING SOIL SAMPLE, DIOXIN > 1 ppb (DIOXIN CONCENTRATION IN ppt)
- ◆ CMS-091 EXISTING SEDIMENT SAMPLE, DIOXIN < 1 ppb
- ◆ CMS-123 (2100) EXISTING SEDIMENT SAMPLE, DIOXIN > 1 ppb (DIOXIN CONCENTRATION IN ppt)
- △ PROPOSED EXCAVATION DELINEATION SAMPLE LOCATION
- AREA PROPOSED IN TTNUS EE/CA FOR EXCAVATION OF RESIDENTIAL USE SOIL
- AREA PROPOSED IN TTNUS EE/CA FOR EXCAVATION OF FLOOD PLAIN SEDIMENT
- ppb PARTS PER BILLION
- ppt PARTS PER TRILLION
- PLATS & LOTS WHERE ACCESS AGREEMENTS HAVE BEEN REQUESTED

NOTE: DOES NOT INCLUDE AREA OF ALLENDALE POND OWNED BY AMPC ASSOCIATES LIMITED PARTNERSHIP AND ALLENDALE MILL ASSOCIATES LIMITED PARTNERSHIP (PART OF PLAT 12/LOT 560)

REV.	DESCRIPTION OF REVISION	DATE	APPR

Loureiro Engineering Associates, Inc.
100 Northwest Drive • Plainville, Connecticut 06062
An Employee Owned Company

SCALE 1" = 50'
COMM. NO. 15RP101
DRAWN BY A.C.L. DATE 07/06/01
APP. BY S.A.M. DATE 07/06/01

CENTREDALE MANOR RESTORATION SUPERFUND SITE
NORTH PROVIDENCE, RHODE ISLAND
IMPLEMENTATION WORK PLAN
SITE PLAN

An Employee Owned Company

DRAWING 3-3

SHEET NO. 1 NO. OF SHEETS 1

15RP101-SITE.dwg

C:\AutoCad\PROJECTS\15RP101\Base\15RP101-SITE.dwg, 08/13/01 04:33:56 PM

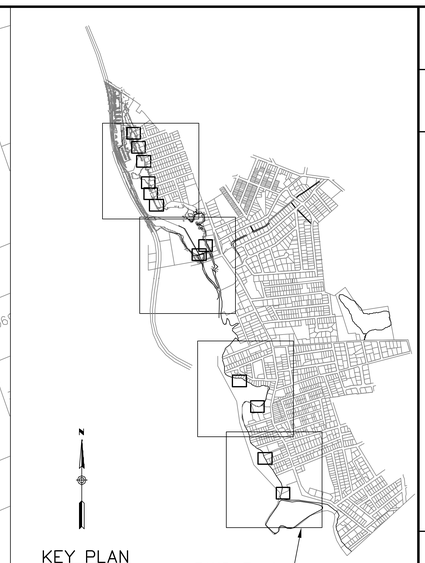

KEY PLAN

SCALE 1" = 1000'

DWG 3-4

LEGEND

- ▲ CMS-422 — EXISTING SOIL SAMPLE, DIOXIN < 1 ppb
- ▲ CMS-456 (2100) — EXISTING SOIL SAMPLE, DIOXIN > 1 ppb (DIOXIN CONCENTRATION IN ppt)
- ◆ CMS-091 — EXISTING SEDIMENT SAMPLE, DIOXIN < 1 ppb
- ◆ CMS-123 (2100) — EXISTING SEDIMENT SAMPLE, DIOXIN > 1 ppb (DIOXIN CONCENTRATION IN ppt)
- △ — PROPOSED EXCAVATION DELINEATION SAMPLE LOCATION
- AREA PROPOSED IN TTNUS EE/CA FOR EXCAVATION OF RESIDENTIAL USE SOIL
- AREA PROPOSED IN TTNUS EE/CA FOR EXCAVATION OF FLOOD PLAIN SEDIMENT
- ppb — PARTS PER BILLION
- ppt — PARTS PER TRILLION
- PLATS & LOTS WHERE ACCESS AGREEMENTS HAVE BEEN REQUESTED

NOTE: DOES NOT INCLUDE AREA OF ALLENDALE POND OWNED BY AMPC ASSOCIATES LIMITED PARTNERSHIP AND ALLENDALE MILL ASSOCIATES LIMITED PARTNERSHIP (PART OF PLAT 12/LOT 560)

25 0 25 50 75

SCALE IN FEET

REV.	DESCRIPTION OF REVISION	DATE	APPR

Loureiro Engineering Associates, Inc.
100 Northwest Drive • Plainville, Connecticut 06062
An Employee Owned Company

SCALE 1" = 50'

COMM. NO. 15RP101

DRAWN BY A.C.L. DATE 07/06/01

APP. BY S.A.M. DATE 07/06/01

CENTREDALE MANOR RESTORATION SUPERFUND SITE
NORTH PROVIDENCE, RHODE ISLAND
IMPLEMENTATION WORK PLAN
SITE PLAN

An Employee Owned Company

DRAWING 3-4

SHEET NO. 1 NO. OF SHEETS 1

15RP101-SITE.dwg

G:\Autocad\PROJECTS\15RP101\Base\15RP101-SITE.dwg, 08/15/01 04:35:05 PM

APPENDIX A

Site-Specific Health and Safety Plan

SITE HEALTH AND SAFETY PLAN
CENTREDALE MANOR RESTORATION SUPERFUND SITE
NORTH PROVIDENCE, RHODE ISLAND

June 9, 2001

Prepared for

CENTREDALE MANOR PERFORMING PARTIES GROUP
c/o Swidler Berlin Shereff Friedman LLP
3000 K Street, NW Suite 300
Washington, DC. 20007

Prepared by

LOUREIRO ENGINEERING ASSOCIATES, INC.
100 Northwest Drive
Plainville, Connecticut

Comm. No. 15RP101.001

Table of Contents

		Page
1.	**PURPOSE**	**1-1**
2.	**SCOPE**	**2-1**
3.	**SITE CHARACTERIZATION**	**3-1**
3.1	Site Description	3-1
3.2	Site History	3-1
3.3	Previous Removal Actions	3-2
3.4	Project Information	3-2
3.5	Work Scope	3-3
3.6	Site Hazard Analysis	3-3
3.7	Project Personnel and Responsibilities	3-5
3.7.1	Health and Safety Manager	3-5
3.7.2	Health and Safety Supervisor	3-5
3.7.3	Health and Safety Officer	3-6
3.7.4	Site Personnel	3-7
3.8	Work Plan	3-8
3.8.1	Work areas	3-8
3.9	Work Area Access	3-8
4.	**GENERAL PROCEDURES**	**4-1**
4.1	General	4-1
4.2	General Site Requirements	4-1
4.3	Site Worker Requirements and Personal Protective Equipment	4-1
4.4	Site worker (employee and subcontractors) acknowledgment form	4-2
4.5	Site visitors (includes client, general contractor and all other persons)	4-3
4.6	Emergency Information	4-3
4.6.1	Emergency procedures	4-3
4.6.2	Emergency Contacts	4-3
4.6.3	Chemical Exposure	4-4
4.6.4	Site Evacuation (actual or potential fire or explosion)	4-4
4.6.5	Sample Transportation-Emergency Spill Response	4-5
4.6.6	Site Resources	4-6
4.7	Training	4-6
4.8	Communication	4-6
4.9	Medical Surveillance	4-7
4.10	Means of Egress	4-7
4.11	First-Aid/Medical Services	4-7

4.12 Fire Protection 4-7

5. INDUSTRIAL HYGIENE PROCEDURES 5-1

5.1 Site Contaminants of Concern 5-1
5.2 Hazard Communication 5-1
5.3 Air Monitoring 5-1
5.3.1 Action Level 5-2
5.3.2 Equipment Calibration 5-2
5.4 Calibration Specification 5-3
5.4.1 Air Monitoring Equipment Specifications 5-4
5.5 Contaminant Control 5-5
5.5.1 Entry procedure for Site workers to get to EZ: 5-6
5.5.2 Exit procedure after completing work or to take a break to leave the EZ: 5-6
5.6 Basic control principles 5-6
5.7 Site Entry 5-8
5.8 Heat/Cold Stress 5-8
5.9 Personal Protective Equipment 5-11
5.9.1 General Levels of PPE 5-12
5.9.2 Site Specific PPE 5-14
5.10 Noise 5-15
5.11 Material Handling (Ergonomics) 5-15
5.12 Respiratory Protection 5-15
5.13 Decontamination 5-16
5.13.1 Decontaminating Heavy Equipment and Vehicles 5-16
5.13.2 Full Decontamination Procedures for Level B, C, and Modified D PPE 5-17
5.13.3 Partial Decontamination Procedures 5-18
5.13.4 When taking a rest break, follow these procedures 5-19
5.13.5 Closure of the Decontamination Station 5-19
5.14 Biological Hazards 5-19
5.14.1 Fauna 5-19
5.14.2 Flora 5-21
5.14.3 Bloodborne Pathogens 5-22

6. SAFETY ENGINEERING PROCEDURES 6-1

6.1 Excavation and Trenching 6-1
6.2 Electrical Safety 6-2
6.3 Heavy Equipment 6-3
6.4 Lockout/Tagout 6-4
6.5 Machine Guarding 6-4
6.6 Powered Hand Tools 6-4
6.7 Vehicles 6-4
6.8 Walking/Working Surfaces (ladders, ramps, scaffolds, and walkways) 6-4

7. ENVIRONMENTAL SAFETY PROCEDURES 7-1

7.1 Spills 7-1
7.2 Waste Management and Shipping 7-1

APPENDICES

Appendix A Emergency Incident Report Forms
Appendix B Accident Report Forms
Appendix C Certification Forms
Appendix D Monitoring Logs
Appendix E Meeting Minutes

1. PURPOSE

It is the intent of this Health and Safety Plan (HASP) to maintain a safe and healthful work-site for all employees, contractors, and visitors at the Centredale Manor Restoration Superfund Site (Site) in North Providence, Rhode Island. This HASP has incorporated all of the applicable OSHA standards (including those for Hazardous Waste and Emergency Response, CRF 29 1910.120) and Best Management Practices that are necessary for the health and safety of employees, contractors, and visitors on the Site. All Site personnel and visitors must read and understand this HASP. They must also sign a Plan Acceptance Form in Appendix C and comply with all of the HASP procedures.

2. SCOPE

This HASP covers the fieldwork associated with the Non-Time Critical Removal Action (NTCRA) being conducted at the Site. The HASP covers all contractor employees, subcontractors working on the Site, and visitors to any work areas on the Site.

Employees and subcontractors conducting fieldwork on the Site are required to follow this site-specific HASP including the work plan and sign the Plan Acceptance Form (Appendix C) before beginning work on the Centredale Site.

Employees and subcontractors are required to comply with all the requirements of the OSHA HAZWOPER standard and be current in this training. These regulations require employees involved in cleanup operations on this Site to have training, medical surveillance, and personal protective equipment (PPE). On-site personnel are also required to comply with all other applicable OSHA regulations.

The information contained within this document represents a compilation of information obtained from previous Site investigations and/or historical Site background information. This HASP will be modified as necessary, if new information becomes available. All changes to the HASP will be made with the approval of the Site's Health and Safety Manager (HSM).

3. SITE CHARACTERIZATION

3.1 Site Description

The Centredale Manor Restoration Superfund Site is located in North Providence, Rhode Island. The main portion of the Site consists of two parcels, 2072 and 2074 Smith Street (or, Plat 14, Lots 200 and 250, encompassing approximately 9.7 acres). The Site includes sediment and floodplain areas of the Woonasquatucket River from Route 44 southerly to the breached Allendale Dam and further to an area just below the Lymansville Dam. The location of the Site is shown on Figure 1-1 - Site Location Figure.

The Centredale Manor property is located at 2074 Smith Street (also known as Route 44). The coordinates for the property are latitude: 41° 51' 29.5" North and longitude: 71° 30' 28.5" West. The 4.74-acre property is registered as Plat 14, Lot 250 in the Land Evidence Records of North Providence, Rhode Island. The Site is currently used as housing facility for the elderly. Approximately half of the 4.74 acres are covered by the Site's eight-story apartment building and two paved parking lots. The remaining portions of the property are landscaped with maintained lawns and trees.

The property is bordered to the north and northeast by Brook Village, a high rise residential building for the elderly; to the east and southeast by a small wooded area, a perennial drainage channel and a residential neighborhood; to the south by a wooded area; and to the southwest, west and northwest by the Woonasquatucket River and a drainage channel. The Woonasquatucket River and the drainage channel converge approximately 0.2 miles south of the property.

3.2 Site History

In the 1930's, Centredale Worsted, a textile mill, was located on the property. In the early 1940's, Atlantic Chemical Company utilized a portion of the site to manufacture chemicals. In 1953, Atlantic Chemical Company changed its name to Metro-Atlantic, Inc. and operated until the late 1960's. Metro-Atlantic, Inc. changed its name to Crown-Metro, Inc. in the late 1960's and ceased operation in the early 1970's. New England Container Company also utilized a portion of the Site for barrel reclamation from 1952 to the early 1970's. . Sometime in the early 1970's a major fire destroyed most of the structures on site. The remaining buildings were razed.

The current buildings at the Site, Brook Village Apartments and Centredale Manor Apartments, were constructed in 1977 and 1982, respectively.

In October and November of 1977, the Rhode Island Department of Environmental Management (RIDEM) conducted several investigations at the property in response to complaints of fumes and odors. Approximately four hundred, 55-gallon drums were observed by RIDEM representatives on the property and in a swampy area near the Woonasquatucket River. From December 1979 to March 1981, RIDEM periodically inspected the property and in 1980, RI DEM observed and inventoried approximately six hundred 55-gallon drums scattered on the property. In February 1982, prior to the construction of the apartment building, 300 to 400 drums were removed from the property containing various hazardous substances.

3.3 Previous Removal Actions

During the construction of the Centredale Manor Apartment complex, soil and drum removal activities were conducted under direct RIDEM supervision. Approximately 6,000 tons of soil and an unknown number of drums were shipped off-site for disposal. In addition, approximately 300 to 400 drums were removed from trash piles and from within the swamp adjacent to the apartment complex and disposed off-site. In March of 1996, a contractor for RIDEM conducted a ground penetrating radar (GPR) investigation to determine whether tanks or additional drums were buried on the Site. Three areas identified anomalies consistent with buried metal debris but did not conclusively identify anomalies associated with buried drums or tanks.

In 1999, a series of Time-Critical Removal Actions were implemented that were proposed in the initial Action Memorandum for the Site. The Removal Actions included clearing and grubbing of approximately 6-acres of the Site, the collection of over six hundred samples, the installation of over a mile of cedar and chain-link fencing, and the installation of two interim measure soil caps over areas of significant dioxin contaminated soil and sediment.

3.4 Project Information

This plan describes Site worker responsibilities, safe work practices, and provides the procedures that will be followed in the event that an emergency occurs at the Site. It is the responsibility of all contractor employees and subcontractors to see that all operations conducted at this Site are carried out in a safe and efficient manner. All personnel and subcontractors are required to read this document and sign the attached Plan Acceptance Form attesting to their understanding and agreement to comply with the procedures and protocols (Appendix C).

Site Name: Centredale Manor Restoration Superfund Site
Location: North Providence, Rhode Island
Expected Duration of Work: 9 months

3.5 Work Scope

The Scope of Work tasks identified in this HASP are generalized to familiarize the reader with the goals of the removal action. The removal action will consist of the following items:

- definition of Site boundaries;
- restricting public access to areas with known contaminated soils containing in excess of 1 part per billion (ppb) dioxin;
- providing Site security;
- determining the extent of contamination and sampling and other exploratory actions;
- mitigation and/or removal of dioxin impacted, residential soils and flood plain sediments.

3.6 Site Hazard Analysis

This Site Hazard Analysis identifies the general and task-specific hazards associated with Site-specific operations and presents an analysis of documented or potential chemical and physical hazards that exist at the Site. Every effort will be made to reduce or eliminate these hazards. Those which cannot be eliminated will be guarded against by use of engineering controls and/or PPE.

Chemical hazards - Include the inhalation, ingestion, or skin absorption of low levels of contaminants in the soil including dioxins, PCBs, volatile organic compounds, semi-volatile compounds, and metals.

Physical hazards - Include cuts, foreign objects in the eye, being struck by equipment or vehicles, and the collapse of excavations and trenches.

Lighting - Work areas must have adequate lighting for employees to see to work and identify hazards (5-foot candles minimum comparable to a single 75-100 Watt bulb). The provisions outlined in 29 CFR 1910.120 (m) shall apply.

Electrical power- All electrical power must have a ground fault circuit-interrupter as part of the circuit. All equipment must be suitable and approved for the class of hazard. The provisions outlined in 29 CFR 1926, Subpart K, shall apply.

3.7 Project Personnel and Responsibilities

3.7.1 Health and Safety Manager

The Health and Safety Manager (HSM) is a manager trained (OSHA HAZWOPER, 1910.120) and empowered with making company-wide decisions concerning health and safety issues. His main responsibility is to provide Health and Safety guidance regarding Site exposures to the Health and Safety Supervisor (HSS). These exposures are based upon information provided in the Site history and description, and ongoing daily on-site monitoring.

3.7.2 Health and Safety Supervisor

The Health and Safety Supervisor (HSS) is trained (OSHA HAZWOPER, 1910.120) and responsible to provide guidance to the HSO, personnel and contractors on the requirements of this HASP for all field oriented activities. The HSS will provide guidance to the HSO, employees, and subcontractors on the following requirements:

- Assist the HSM as requested to identify potential hazards in the proposed field activities.
- Assist the HSM in discussing the scope, health and safety requirements and the resources necessary to complete the fieldwork safely.
- Assist the HSM to determine the proper personal protective equipment, engineering controls, and emergency response procedures to address the risk evaluation specified above and the tasks described in the work plan.
- Assist the HSO as requested in briefing and training Site personnel about the potential Site hazards and proper procedures to control them.
- Assist the HSO as requested to monitor job-site personnel to ensure that all HASP health and safety procedures are followed and identified deficiencies corrected as soon as possible.
- Assist the HSO as requested to prepare and submit all health and safety reports including those for accidents and incidents in a timely manner.

3.7.3 Health and Safety Officer

The Health and Safety Officer (HSO), will be primarily responsible for the following:

- Supervise on-site activities for Health and Safety described in the work plan.
- Complete a 40-hour health and safety course, 8-hour refresher course, and an 8-hour supervisor-training seminar.
- Assure that all Site workers are trained as required by the OSHA HAZWOPER standard including the 40 hour initial and 8 hour annual refresher classes.
- Assure that all personnel allowed entering the EZ or CRZ (including EPA, contractors, and visitors) are aware of the potential hazards associated with substances known or suspected to be on Site.
- Assure that all personnel are aware of the provisions of this plan and are instructed in the safety practices defined in the plan, including its emergency procedures.
- Assure that the appropriate safety equipment is available and properly utilized by all personnel on Site.
- Correct any work practices or conditions under HSO control that may result in exposure to hazardous substances or injury to personnel.
- Brief the HSS and HSM frequently with technical input and status reports for on-site health and safety issues.
- Communicate the HASP requirements to all Site personnel (employees, contractors, and visitors as applicable) initially and in daily briefings as necessary (Appendix E).
- Keep a copy of the HASP on-site and readily accessible to all employees, contractors and visitors.
- Assure that any employee wearing a respirator has been trained, medically evaluated and fit tested according to the OSHA respiratory standard.
- Assure that all Site workers have been trained in PPE requirements and the OSHA Hazard Communication standard.
- Maintain health and safety training records for Site personnel.
- Assure that all site-work is done according to the HASP procedures.

- Provide and enforce the use of proper PPE on-site.
- Complete record keeping as required by the HASP.
- Look for signs and symptoms of potential employee exposure to Site hazards.
- Correct any unsafe conditions on Site as soon as possible.
- Maintain good housekeeping in the working area(s).
- Complete an employee accident investigation or incident report (for other events such as spills, vehicle accidents, etc.). These forms are in appendix A and B. Submit this report promptly to the HSS or HSM.
- Initiate and oversee emergency procedures as specified in this HASP.
- Maintain effective Site operations, minimize the number of personnel and equipment in the exclusion zone or contaminated area. Site visitors shall comply with this HASP and must follow the same requirements as field staff. PPE requirements may be modified for visitors, depending on the situation. Modifications must be approved by the HSM or HSS.

3.7.4 Site Personnel

All personnel on-Site (employees, sub-contractors and visitors) must comply with the following:

- Be currently trained in the OSHA initial 40-hour health and safety course and an 8-hour annual refresher.
- Visitors to the Site wishing to enter any designated work zone are required to have completed a 24-hour health and safety training course and provide certification to the HSO.
- All Site personnel will provide certification that they have read this HASP, understand the procedures and sign the Plan Acceptance Form (Appendix C).
- Attend Site health and safety briefings (Appendix E).
- Be aware of anticipated chemical, physical, and biological hazards and know what to do when these hazards are encountered.
- Be trained on PPE use, safe work practices, decontamination procedures to be followed, emergency procedures, and communications.
- Properly use the required PPE and respiratory protective equipment.

- Have a current medical evaluation in compliance with the HASP for HAZWOPER and respiratory protection.
- Be fit tested and physically capable of using a respirator (if/when one is required). Should respiratory protection be required, field workers shall not have facial hair that interferes with its proper fit.
- Use the buddy system when wearing respiratory protective equipment.
- When working in the exclusion zone (EZ), visual contact should be maintained with other personnel in the area; field personnel should be close enough to assist each other during an emergency.
- Procedures for entering and leaving the EZ must be planned and all necessary equipment present before entering the EZ.

3.8 Work Plan

3.8.1 Work areas

The Site has been divided into different areas based on the concentration of hazardous substances identified during the previous investigations. See the supplementary file information that shows an overall map of the Site. The Site is divided into the following work areas or zones for Remedial Action:

Work Area - Excavation Area

The EZ is inside the boundary of the estimated limits of remediation. It encloses any area in which sampling activities are being conducted.

a. The Contaminant Reduction Zone (CRZ) is the area adjacent to and outside the EZ. It extends out 50 feet from the EZ boundary.

b. The Support Zone (SZ) is the area beyond the outside limit of the CRZ.

3.9 Work Area Access

a. Employees, sub-contractors and Site visitors must provide the HSS with documentation showing that their HAZWOPER training is current.

b. These personnel must agree to comply with this HASP, or equivalent health and safety requirements before Site entry.

c. Personnel failing to meet or abide by the provisions of this HASP, or equivalent health and safety procedures, shall be restricted from entering work areas.

d. If the HSO believes that personnel or others on site may be in danger, he or she has the authority to immediately suspend work and may instruct personnel to evacuate (Section 4.6.4) the area. Examples of situations when this may happen are:
   - Severe weather conditions such as thunder, lightening, tornado warnings in the area, or extreme winter conditions.
   - Site conditions have changed, for whatever reason, in such a way that the HASP does not adequately address the current situation.
   - Safety precautions being used are inadequate for the situation.
   - Personnel including contractor employees, subcontractors, or visitors are or may be exposed to an immediate health hazard.
   - Fire, explosion, and/or emergency situation exists in the work area or its vicinity.

4. GENERAL PROCEDURES

4.1 General

Employee protection for this project includes designated work zones, PPE, exposure monitoring, personnel and equipment decontamination procedures, procedures for working in extreme weather conditions, standard safe work practices, and general rules of conduct.

4.2 General Site Requirements

- Warning signs, barricades, and flag persons will be placed or used as needed to warn others of any Site hazards.
- Fire Protection/Fire Prevention: Operations involving the potential for fire hazards shall be conducted in a manner as to minimize the risk. Non-sparking tools and fire extinguishers shall be used or available as appropriate. Sources of ignition shall be removed. When necessary, explosion-proof instruments and/or bonding and grounding will be used to prevent fire or explosion. The provisions outlined in 29 CFR 1910 Subpart L, shall apply.
- Fire extinguishers will be placed in all heavy equipment and adjacent to work zones. Access to fire extinguishers will be discussed in the daily health and safety briefing and maintained at all times.
- A first aid kit will be kept in an easily accessible area for the duration of all Site activities.
- Eyewashes will be located in areas where chemicals or particulates could get in a person's eyes.
- Chemicals will be properly stored in cabinets.
- Wastes generated during Site activities will be placed in appropriate receptacles and labeled in accordance with federal, state, municipal, and facility regulations.

4.3 Site Worker Requirements and Personal Protective Equipment

- Eye protection with side shields will be worn by all personnel while conducting Site work as per 29 CFR 1910.151 (c).
- Head protection (i.e. hard hat) meeting the protection standard of ANSI Z89.1-1969 will be worn by all personnel entering an excavation area, exclusion zone or any area where overhead hazards may be present.

- All Site workers are required to wear safety-toe footwear that complies with ANSI Z41.1-1967.
- Ear protection will be provided in areas where Site activities require that workers be exposed to high sound levels (90dBA). If levels are above 85 dBA, workers will comply with the hearing conservation program.
- Eating, drinking, chewing gum or tobacco, smoking, or any practices that increase the probability of hand-to-mouth transfer and ingestion of material are prohibited in any work zone area designated by the HSS or HSO. Designation of these areas will be based on information obtained from prior sampling efforts or existing information available from the facility or other sources.
- Hands and face must be thoroughly washed upon leaving the work area. Provisions for water will be made by the HSO.
- When decontamination procedures for outer garments are in effect, comply with decon required by HSO.
- Contact with contaminated or suspected contaminated surfaces should be avoided. Whenever possible, do not walk through puddles, leachate, or discolored surfaces; do not lean, sit, or kneel on contaminated surfaces. Do not place equipment on contaminated surfaces.
- Field personnel taking prescription and/or non-prescription medication must notify their physician and HSS prior to the fieldwork in order to confirm that the medication will not effect their ability to conduct on-site activities.
- Field personnel working adjacent to or over water will be provided with USCG approved personal flotation devices (PFD's). Employees are required to wear these when working over water that is > 3 feet deep. Ring buoys with at least 90 feet of line will also be available for emergency rescue operations. The distance between ring buoys shall not exceed 200 feet. One lifesaving skiff will be available where employees are working over or adjacent to water.

4.4 Site worker (employee and subcontractors) acknowledgment form

Employees and subcontractors shall comply with all procedures in this HASP. Employees and subcontractors must sign the Plan Acceptance Form in Appendix C before entering the Site and starting any fieldwork.

4.5 Site visitors (includes client, general contractor and all other persons)

They must comply with all of the requirements in this HASP when entering an exclusion zone.

4.6 Emergency Information

4.6.1 Emergency procedures

Emergency response procedures must be followed in the following on-site situations:

- A Site worker or visitor is involved in an accident.
- A Site worker experiences any adverse health effects or symptoms potentially related to on-site exposure to work activities or personal health problems such as a heart attack.
- A Site worker has a serious health problem such as heat stroke or heart attack.
- A condition is discovered that poses an immediate health or safety hazard.

The following emergency procedures should also be followed:

- Site work area entrance and exit routes must be planned and posted.
- If any member of the field team experiences any effects or symptoms of exposure while on the scene, the entire field crew will immediately halt work and act according to the instructions provided by the HSO.
- If the situation is more hazardous than anticipated, then work will be suspended until the HSO has evaluated the situation and provided the appropriate instructions to the field team.
- An accident report will be completed by the HSO for all accidents.
- In the event of a serious injury, the HSO or other readily available Site worker will call 911 for emergency help. If it is a minor injury, the HSO may determine that first aid only is appropriate.
- If a Site worker gets chemicals on the skin or face, the affected areas should be flushed immediately with copious amounts of clean water.

4.6.2 Emergency Contacts

If any situation or unplanned occurrence requires outside or support service, the HSO, HSS, and HSM must be informed. The following agencies will also be contacted:

Contact	Agency or Organization	Telephone
Police	North Providence Police Station	(401) 231-4533
Fire	North Providence Fire Station	(401) 231-8505

Hospital Emergency	Saint Joseph's Hospital (Map & Route are posted in all job Site trailers)	(401) 456-3000
Ambulance Service		(401) 456-2119
RI Poison Control Center:		(800) 682-9211
Project Manager:		

Directions from the Site to the Hospital:

Exit Centredale Manor, follow Route 4 East for approximately 1.8 miles towards Providence. Make a left onto High Service Avenue. The hospital is on the left, approximately 0.3 miles from the junction of Route 44 and High Service Area.

4.6.3 Chemical Exposure

If a member of the field crew is exposed to chemicals, the procedures outlined below should be followed:

- Another crew member (buddy) should remove the individual from the Exclusion Zone;
- If possible, the affected worker shall be decontaminated prior to leaving the Contaminant Reduction Zone;
- Precautions should be taken to avoid exposure of other individuals to the chemicals;
- If the chemical is on the individual's clothing, remove the clothing unless it is a burn injury;
- Determine, if possible, the chemical of exposure prior to administering first aid. (First aid procedures are listed in the NIOSH Pocket Guide to Chemical Hazards and should be discussed prior to beginning Site work for all chemicals of concern.);
- In case of eye contact, emergency eye wash and/or available clean water should be used. At the same time, one of the field crew members should immediately notify the HSO and medical personnel;
- All chemical exposure incidents must be reported by the HSO on the Emergency Incident Report form (Appendix A) to the HSS;
- The HSS will determine if any regulatory reporting requirements exist and comply with the requirements.

4.6.4 Site Evacuation (actual or potential fire or explosion)

The site specific trigger for site evacuation will be imminent danger in the form of weather, fire or the following action levels: VOC's, 5 ppm on the PID; total dust, 5 mg/m3 and respirable dust, 3 mg/m3 both on the dust meter.

The Site area will be evacuated and the fire department will be notified in the event of actual or potential fire or explosion. Three short blasts from an air horn will be provided signaling evacuation from the exclusion zones. Depending on the cause and magnitude of the conditions requiring evacuation, three stages have been designated:

- Withdrawal from the immediate work area to a safe upwind location.
- Withdrawal from Site.
- Evacuation of nearby facilities.

Withdrawal to Upwind Location - Withdraw to a safe upwind location as identified by the provided wind socks across the Site if:

- Air quality measurements that contain excessive concentrations of volatile organics, combustible gasses (>20% LEL), or oxygen percentage above or below safe levels for the level of protection being worn. The field crew will withdraw to a safe upwind location determined by the HSO.
- A minor accident occurs. The victim will undergo decontamination procedures and be transported to a safe upwind location. Field operations will resume after first aid and/or decontamination procedures have been administered to the affected individual.
- Protective clothing and/or respirator malfunctions.

Withdrawal from Site - Evacuate the Site if daily air monitoring shows the following:

- Explosive levels (> LEL) of combustible gases or high levels of toxic gases, or volatile organics (> Respirator fit factor) are recorded.
- A major accident or injury occurs.
- Fire and/or explosion occurs.
- Shock sensitive, unstable, or explosive materials are discovered.

Evacuation of Nearby Facilities:

- A continuous release of toxic, flammable, or explosive vapors from the Site could affect people off-site. Air quality should be monitored downwind to assess the situation. If a situation arises which may require off-site evacuation, contact emergency response personnel immediately.

4.6.5 Sample Transportation-Emergency Spill Response

All samples are to be transported in coolers. Each sample container shall be secured in the cooler to prevent breakage or leakage of the container. Laboratory supplied sample preservatives (i.e. Hydrochloric Acid, Sulfuric Acid, Nitric Acid and/or Sodium Hydroxide) if not provided in the sample containers shall be transported to and from the Site in a designated cooler marked "Preservative Cooler" and will be properly secured in the vehicle.

Each sampling vehicle is equipped with a spill/clean-up kit to be used in the event of a spill of samples and/or sample preservative. All personnel transporting samples shall be trained on proper spill clean up techniques and reporting requirements.

4.6.6 Site Resources

Telephones, rest room facilities, and water supply are available. Emergency first-aid equipment, eye washes, and fire extinguishers must be readily available to all Site workers.

4.7 Training

Personnel who enter the CRZ and EZ shall meet all of the training requirements including those for 40 hour initial health and safety training, annual 8 hour refresher training and supplemental training required for on-site supervisors.

4.8 Communication

On-site:

Site workers will communicate by either voice or hand signals. Hand signals will be discussed during the daily Site briefing. Communications are necessary to (1) alert Site workers of emergency situations, (2) transmit safety information, (3) communicate changes in work schedules and (4) maintain Site control. Voice communication shall be provided by person to person contact.

Three short blasts from an air horn will be the signal to evacuate the excavation.

The following hand signals will be used for communication when voice is obscured:

Hand Signal	**Meaning**
Hands clutching throat	Out of Air/cannot breathe
Hand on top of head	Need Assistance
Thumbs up	OK

Thumbs down	No, negative
Grip partner's waist	Exit area immediately

Off-site:

Communications between the Site and off-site personnel will be by installed phones. It will be used to coordinate emergency responses, file reports, and maintain contact with off-site personnel.

4.9 Medical Surveillance

Personnel with medical restrictions, whether suggested by their personal physician or the company physician shall abide by those restrictions. If asked to perform a task and doing so would violate a medical restriction, personnel shall inform the HSO that they are not permitted to perform the requested task.

All Site workers must have a current medical evaluation in accordance with the respirator protection and HAZWOPER standards.

4.10 Means of Egress

Evacuation routes must be developed and communicated to employees through postings, safety talks and drills.

4.11 First-Aid/Medical Services

First-aid equipment must be properly maintained on-site in a readily accessible location. The HSO should identify those workers trained in first-aid/CPR for possible assistance in an emergency.

4.12 Fire Protection

Multi-purpose portable fire extinguishers should be maintained in the on-site trailer, buildings and vehicles.

5. INDUSTRIAL HYGIENE PROCEDURES

5.1 Site Contaminants of Concern

Based on previous EPA remedial investigations, contaminants of concern during excavation, sampling, and remediation activities have been identified as: dioxins, PCBs, volatile organic compounds, semi-volatile compounds, and metals. The primary contaminants of concern at the Site are dioxins.

The following is a summary of health and safety information and safe work practices that were used in past Site investigation and removal activities. This information is intended to provide Health and Safety guidelines for excavation, sampling, and remediation work. Site workers should understand that the following information is a guide and does not detail all Site conditions and activities that need to be considered.

The chemical hazards on the Site will arise from exposure to contamination and decontamination materials. Previous investigations of the Centredale Manor Restoration Site have identified a number of compounds that could potentially come in contact with Site workers. These compounds are listed in Table 5-1. In addition to the site-specific compounds, chemicals that the contractor will bring on Site for decontamination procedures are included in the list. The Material Safety Data Sheets (MSDS's) for decontamination, calibration, and all chemicals brought on Site are located in a notebook in the job Site office trailer.

5.2 Hazard Communication

Chemical and contaminant hazard information must be communicated to employees through training, daily briefings, review of air monitoring data, readily accessible MSDS's and hazard labels on secondary containers.

5.3 Air Monitoring

Air will be monitored daily using a handheld PID, combustible gas indicator and DataRAM Real-Time Aerosol Monitor before field activities begin at each new EZ and during ground-disturbing activities.

5.3.1 Action Level

For this project, the Action Level (AL) is 5ppm (PID) or total dust as 5 mg/m3 and respirable dust as 3 mg/m3 (DataRAM) in the breathing zone. Above these levels, the PPE level needs to be upgraded from Level D to Level C. To exceed the AL, PID and DataRAM readings should remain above the AL for at least one or two minutes at a time. Readings elevated for only a few seconds every 15 or 20 minutes do not exceed the AL and do not require workers to upgrade their level of PPE.

Field activities shall stop if breathing zone levels reach and exceed the Action Level (AL), or site conditions indicate additional health and safety precautions are needed. Field staff will then leave the area and notify the site supervisor of the situation and he/she shall contact the project manager, HSM and HSS. The HSO with guidance from the HSS and/or HSM will be responsible for reassessing the hazards and prescribing revised health and safety requirements as necessary, including an upgrade of respiratory protection, protective clothing, revising work schedules, revising decontamination procedures and evacuation procedures (Section 4.6.4).

5.3.2 Equipment Calibration

Monitoring equipment such as PIDs (two PID's on site) and DataRAM shall be calibrated daily or their proper function verified before being used. Throughout the day, this equipment shall be periodically checked to ensure it is working properly. A final calibration shall be conducted at the end of the workday, at which time each instrument will be checked to ensure it is free from surface contamination. Field staff shall record in their field notebooks the fact that they conducted these calibrations and checks and note whether the equipment was functioning properly. Equipment response that differs more than 10% from known standards is considered malfunctioning. Malfunctioning equipment should be brought to the attention of the HSS or HSM, who will arrange for repair and/or replacement.

5.4 Calibration Specification

Calibration specification may change according to equipment specified in Section 5.0. Edit as necessary.

Instrument	Gas	Span	Reading	Method
PID: PhotoVac 2020, 10.6 ev probe	100 ppm isobutylene	5.0 " 2.0	102 ppm	1.5 l/m reg T-tubing 0.25 l/m reg direct tubing
CGI: MSA 260, 261, 360 or 361	0.75% pentane	N/A	50% LEL	1.5 l/m reg direct tubing
DataRAM and other monitoring instruments will be calibrated per manufacturer's instructions. A simplified outline of calibration procedures will be developed and posted by the HSO.				

5.4.1 Air Monitoring Equipment Specifications

Air monitoring equipment examples are described below. Edit as necessary to reflect the site conditions and available equipment.

AIR MONITORING EQUIPMENT SPECIFICATION				
Instrument	**Tasks**	**Action Levels**	**Frequency**	**Calibration**
Photo ionization Detector (PID), Photovac 2020 or equivalent	Excavation	0-5 ppm Level D 5-100 ppm Level C >100 ppm Stop work; HSM will reevaluate controls.	Periodic monitoring of area surrounding excavation during removal operations.	As recommended by the manufacturer
DataRAM	Excavation	0 - 5 mg/m3 Stop work; HSM will reevaluate controls.	Periodic monitoring of area surrounding excavation during removal operations.	As recommended by the manufacturer

5.5 Contaminant Control

Work zones will be used for Site control in all work areas. There will be three zones to reduce chemical exposures to Site workers (employees and contractors), visitors and the general public. These zones will also reduce the potential for contaminant migration. The three zones are listed as follows:

a. Exclusion zone (EZ) or hot zone.

b. Contamination reduction zone (CRZ)

c. Support zone (SZ)

Throughout Remedial Activities (RA), the exclusion zone will include all areas where remedial activities are in progress including all sampling, excavation, screening, and remediation areas. It is where chemical contamination is known or suspected to be present. The EZ includes the work area except for areas set aside as either the CRZ or SZ. The EZ will be defined and marked off in the field.

When personnel enter the EZ wearing PPE they must use the "buddy system." Under these conditions, all persons entering the EZ must be able to:

a. Provide his or her partner with assistance.

b. Observe his or her partner for signs of chemical exposure and heat stress.

c. Periodically check the integrity of his or her partner's protective clothing.

d. Notify the support personnel (in the SZ), or others if emergency help is needed.

The CRZ is adjacent to the EZ and serves as a buffer between the two zones. All decontamination stations, operations and procedures will be conducted in the CRZ; the intent is to prevent the spread of contaminants from the work areas. When entering the CRZ from the SZ, personnel must be wearing the prescribed PPE. Exiting the CRZ requires removal of all contaminants through compliance with established decontamination procedures.

The support zone is the outermost area and is considered a non-contaminated clean area. The support zone will be equipped with an appropriate first-aid station and equipment to support

activities occurring in the EZ and CRZ. The actual location and boundary of work zones will be determined and marked off in the field. Existing Site conditions such as the prevailing wind direction, location of utilities, roads and access for emergency response personnel shall be considered when determining zone locations.

5.5.1 Entry procedure for Site workers to get to EZ:

a. Enter the SZ through the designated entry point.

b. Personnel must put on the specified PPE in the SZ

c. Enter the CRZ through the designated entry point.

d. Enter the EZ through the designated entry point; the HSO can determine if a checkpoint here is necessary to regulate the flow of personnel.

5.5.2 Exit procedure after completing work or to take a break to leave the EZ:

a. Leave the EZ and enter the CRZ through the designated exit and entry points.

b. Personnel and equipment will be decontaminated in the CRZ.

c. Personnel will leave their decontaminated PPE and don their street clothes in the SZ.

d. Personnel shall leave the SZ through the designated exit point.

5.6 Basic control principles

Site personnel must follow two basic control principles 1)Minimize contact with contaminants and 2) follow HASP decontamination procedures to remove contaminants from personnel and/or equipment. This is achieved by the following:

- Set up security, physical barriers and warnings to exclude unnecessary personnel and visitors to the job-site;
- Establish the three zones: exclusion, contamination reduction and support. Set up access control points to each zone.
- Minimize the number of Site personnel and equipment in the work area;
- Minimize and control the exposure of Site personnel and equipment to airborne dispersion of contaminants;
- Implement appropriate decontamination procedures.

- General Work Zone Requirements
- The HSO will brief all new Site personnel and visitors entering the Site about anticipated hazards, HASP requirements (including PPE) and emergency procedures.
- The HSO will also hold a daily briefing to be attended by all Site workers. This briefing will also include emergency information such as a designated meeting place.
- Field personnel are required to notify the HSO of any medical restrictions related to the work they are expected to perform.
- Field personnel must become familiar with the physical characteristics of the Site, including:

    a. Site hazards.

    b. Site access and egress;

    c. Wind direction in relation to contaminated areas;

    d. Accessibility to associates, equipment, decontamination areas and vehicles;

    e. Communication methods including list of emergency information;

- The HSM and HSS must ensure that field personnel have the designated PPE when they enter the job-site;
- Site personnel must be qualified to wear respirators in accordance with OSHA 1910.134 requirements. Site workers will wear respirators in Level C and B areas. The HSO may exempt respirators in excavation areas if PID Levels are 0 in the breathing zone.

    a. Site personnel must be qualitative fit-tested (Level C) and medically evaluated prior to use of respirators. Quantitative respirator fit test is required for Level B.

    b. The HSO may also require on-site qualitative fit testing of respirators for certain conditions. Qualitative fit-testing will consist of testing the face seal (e.g., with ampules of amyl acetate (Banana Oil), or stannic chloride (irritant smoke) applied around the seal of the respirator). Respirator users cannot have facial hair that interferes with a satisfactory fit of mask-to-face seal;

- Emergency procedures must be planned and implemented prior to going on-site. Personnel must be familiar with emergency procedures.
- If Site personnel should sense potentially dangerous situations (i.e. presence of strong, irritating, or nauseating odors), they need to notify the HSO to take appropriate action.
- All unfamiliar operations/procedures should be reviewed with Site workers prior to the actual work being done.
- Personnel and equipment in contaminated areas should be kept to a minimum, consistent with effective Site operations.
- All Site visitors must be briefed on and follow the HASP and personal protective equipment requirements. These may be modified by the HSO for visitors depending on the situation and following approval by the HSM and HSS.

5.7 Site Entry

Prior to beginning work, the HSO will conduct a daily health and safety briefing covering, at a minimum, the following items:

- Access and egress points to the Site based upon the topography, wind direction and other pertinent factors.
- Level of personal protective equipment and decontamination procedures that will be used and criteria to upgrade the requirements.
- Review of the Site's health and safety monitoring procedures and exposure limits (e.g., OSHA PEL's for VOCs, etc.).
- Review of emergency procedures that will be instituted in case of an accident, including but not limited to, personnel responsibilities, communications, first aid and reporting requirements;
- Critique of previous days activities, noting any deficiencies in the health and safety program or in worker compliance with the program;
- Depending upon the hazard level, the HSO may pair Site personnel into teams (buddy system) and provide them with verbal and non-verbal communication instructions in case of an emergency situation;

5.8 Heat/Cold Stress

Site operations being conducted in extremely hot or cold environments will be performed at the direction of the HSO with guidance from the HSS and HSM.

When the ambient adjusted temperature exceeds 65 °F and personnel are wearing protective clothing, a heat stress monitoring program shall be implemented as appropriate. Details such as rest period length and frequency, and the consumption of fluids will be discussed during the heat stress monitoring program. Employees shall have access to break periods and drinking water as necessary.

Supervisory personnel are responsible for the monitoring of all Site workers to guard against heat stress. Physiological monitoring of workers in protective wear such as saranex or other semi-impermeable coveralls should commence when the adjusted ambient temperature reaches 65 degrees Fahrenheit (°F) or above. Adjusted ambient temperature (ta adj) is the ambient temperature (ta) adjusted for solar radiation, and is calculated as: ta adj; °F = ta °F + (13 x % sunshine). Frequency of monitoring should increase as the ambient temperature increases or if slow recovery rates are indicated. Listed below are suggested work period duration for personnel wearing saranex or other semi-impermeable protective clothing.

Ambient Temperature (Adjusted)	Work Duration for Permeable PPE (level D)	Work Duration for Impermeable PPE (levels C, B, modified D)
65°F - 77.5°F	120 minutes	120 minutes
77.5°F - 82.5°F	120 minutes	90 minutes
82.5°F - 87.°F	90 minutes	60 minutes
87.5°F - 90°F	60 minutes	30 minutes
90°F or above	45 minute	15 minutes

Prevention

Provide plenty of liquids: Drinking water is the single most important method of replacing body liquids, lost through perspiration. Other drinks, such as 50% solution of fruit juice or the like in water, replace some fluids, but do not do the job done by plain water. Be cautious about using other liquids such as alcoholic beverages, and caffeine containing liquids, such as coffee, tea, and most soft drinks, these substances act as diuretics and cause a loss of fluids.

As a rule of thumb, water consumption should be approximately 80 ounces per day at a rate of 4 to 8 ounces every 15 minutes while in an exercising or physical labor mode, and 8 to 16 ounces after a period of physical activity is completed. If heat cramps symptoms are experienced, such as muscle cramps, ankle swelling or feeling faint, some electrolyte replacement such as sport drinks or a mixture of fruit juice and water may be needed. If heat exhaustion is experienced, a

small amount of table salt with water and electrolyte drink can be used. A healthy diet and plenty of water are the essential ingredients for warding off heat related injuries.

Provide cooling devices: On-site showers may be used to reduce body temperature and/or cool protective clothing. The amount and type of undergarments worn will be left to the preference of each individual, unless prone to heat stress, especially heat rash. In this case, the worker may be required to wear "long john" type underwear to keep chemical resistant clothing away from the skin.

Adjustment of the work schedule: When practicable, the most labor-intensive tasks should be carried out during the coolest part of the day.

Heat Injuries (cause, symptoms, and first aid)

HEAT RASH

CAUSE	SYMPTOMS	FIRST AID
Continuous exposure to heat and humidity, aggravated by chafing clothing.	Appearance of red pimples around chaffed areas, accompanied by itching and tingling.	Remove sources of irritation, rinse skin surface to remove sweat and dirt.

HEAT CRAMPS

CAUSE	SYMPTOMS	FIRST AID
Insufficient replacement of electrolytes and body water lost through excessive sweating.	Stomach, leg, or arm cramps, muscles spasms in abdominal region, wet skin, dizziness, extreme thrist.	Remove worker to contamination reduction zone. Remove protective clothing, elevate feet and loosen other clothing. If conscious, provide salt solution (1 tsb to 12 oz. H_20 .

HEAT EXHAUSTION (SERIOUS)

CAUSE	SYMPTOMS	FIRST AID
Insufficient replacement of electrolytes and body water lost as a result of exertion in a hot environment and excessive sweating.	Same as heat cramps plus headache and weakness; worker may appear drunk, dizzy, or drowsy; skin is pale, cold, and moist.	Remove worker to the contamination reduction zone. Remove protective clothing. Elevate feet and loosen other clothing. If conscious, provide salt solution (1 tsb to 12 oz. H_20) to sip. Transport to nearest hospital.

HEAT STROKE (VERY SERIOUS)

CAUSE	SYMPTOMS	FIRST AID

Prolonged Exposure to high temperatures and failure of the body's cooling mechanisms. More likely to strike a worker who is unacclimitized to heat or one who has suffered a previous heat injury.	Person may stop sweating, skin is red and hot, victim may experience weakness, dizziness, confusion, headache, seizures, and nausea, respiration and pulse may be rapid and weak, unconsciousness and collapse may occur suddenly, body temperature sometimes reaches 106 to 110 degrees F.	**Heat stroke** is a **medical emergency.** Remove worker to contamination reduction zone. Immediately cool worker with ice packs to neck, groin, or underarms. If packs are not available, spray or soak victim with cool water and fan body. Do not immerse in ice water. Do not try to give water to an unconscious victim. Rush worker to the nearest hospital.

5.9 Personal Protective Equipment

Protective clothing, respiratory protection, and hearing protection control the exposure of on-site workers to chemical contaminants and other hazards. It is imperative that the personal protective equipment (PPE) designated by the HSM and HSS be worn when required. The selection of PPE is based upon the type and concentrations of expected contaminants, work activities to be performed, and the PPE properties to prevent contaminants from reaching target organs. The appropriate level of protection for initial Site entry is based upon a conservative assessment of the best available Site contamination information. The NIOSH pocket guide to chemical hazards is supplied to the HSO for use as a source of general industrial hygiene and medical surveillance information. The Technical Director-Health & Safety is also available for consultation on the appropriate level of PPE use.

Industrial hygiene monitoring will be performed by Staff and the frequency will be adjusted according to the analytical results. It will be used to characterize the chemical exposures realized by Site workers performing the above activities. Based on Site conditions and changes in the scope of work, the HSO may request changing or modifying the required PPE. However, the decision to change PPE requirements or to upgrade or down-grade levels will be specified by the HSM or HSS.

5.9.1 General Levels of PPE

Level B

The HSO will not allow use of level B without approval of the HSM and HSS. The HSM and HSS will base their decision upon additional air monitoring (Section 5.3) and a reevaluation of the work plan for appropriate safety measures. The selection of Level B protection is justified when the concentration of known airborne contaminants have the potential to exceed the protection rating (fit factor) of air purifying respirators, contaminants have a low PEL/carcinogenic, approach an IDLH, or atmosphere is oxygen deficient (SCBA required). Level B is only allowed when the types of contaminants will not cause damage to the skin and body from contact.

Periodic air monitoring in the breathing zone will be done throughout the day and when conditions will help to determine if level B is required.

Work Zones:

A three-zone work area (exclusion zone, contaminant reduction zone, and support zone) is required when Level B PPE is used.

Equipment:

- Respirator protection is full face, positive pressure or pressure demand respirator supplied by either an air-line in a cascade bottle system or a self-contained breathing apparatus.
- Workers will carry a 5-minute emergency egress air supply.
- Outer garments will be coated Tyvek clothing with a hood. The specific laminate will depend on the expected contaminant and will be determined by the HSS and HSM. Inner garments will be a ventilated Tyvek coverall. All zippers and cuffs will be sealed with duct tape.
- Hands will be protected at a minimum by a two glove system, an inner latex or nitrile glove and an outer chemical resistant glove (Nitrile, PVC, or Neoprene) depending on the contaminants of concern.
- Foot protection will consist of PVC or Neoprene boots with a steel shank and steel toe that meets the protection standard of ANSI Z41.1-1967.
- The head will be protected by a hard hat that meets the protection standard of ANSI Z89.1-1969.

- Communication will be maintained between workers and support staff with wireless, hands-off, two-way radios.

Staff:

Staff requirements for Level B work will consist of a minimum of 4 persons. A two-person buddy system is required for all persons entering the exclusion zone. A third person will remain in the contaminant reduction zone in Level C protection to assist with decontamination of personnel and equipment and perform first-aid if necessary. The fourth person will remain in the support zone to monitor work progress, stage equipment, and obtain medical assistance if necessary.

Level C

Level C protection is acceptable for unknown VOC concentrations < 100 ppm in the breathing zone, and known contaminant concentrations do not exceed the NIOSH approval rating of an air purifying respirator.

Concentrations of unidentified total vapors/gases >5 ppm or particulates > 5 mg/m3 in the breathing zone need to be evaluated (Section 5.3) as discussed above. Wind direction and atmospheric conditions (i.e. humidity) must also be considered to get meaningful background readings with the field instrument(s).

Required respiratory protection:
A full-face, air-purifying respirator with a chemical cartridge (i.e. organic vapor/acid) and dust pre filter (P99/100) specified by the HSM and/or HSS that is MSHA/NIOSH approved.

Other required protection:

- Outer garments will consist of Tyvek clothing, (the specific laminant would be determined by the HSS and HSM). The clothing will be long sleeve with elastic at the wrists and ankles and of adequate size to allow for freedom of movement.
- Hands will be protected with inner disposable gloves (i.e. latex, vinyl, or nitrile).
- All cuffs and zippers will be elastic or sealed with duct tape.
- Shoes will consist of leather or chemical-resistant boots or shoes, steel toe and shank.
- Disposable or non disposable fireman type over boots.
- Frequent air and personnel monitoring will occur while wearing Level C protection.

- The HSO will determine if hearing protection is required based upon Site noise levels.

Criteria for Use

- Work in exclusion zone known to contain potential hazards, and:
- Atmospheric contaminants, liquid splashes, or other direct contact that will not adversely affect or be absorbed through any exposed skin;
- Types of air contaminants have been identified, relative concentrations determined, and an approved canister respirator is available that can remove the contaminants;
- No evidence of acute or chronic effects on exposed personnel have been observed or documented;
- All criteria for the use of air-purifying respirators are met (i.e. no IDLH, no oxygen deficiency, etc.).
- Total vapor readings > 5 ppm or approved by HSM.

Modified Level D

This is the same as level C without using a respirator. It will be allowed by the HSM in the excavation exclusion zone if the PID reads VOCs less than 5 ppm and DataRAM readings in the breathing zone are less than 5 mg/m3.

Level D

Level D protection is regular work clothes:
Options as required by HSO, for special operations such as handling chemicals:

- Tyvek coveralls (optional)
- Leather or chemical-resistant boots or shoes, steel toe and shank
- Hard hat (face shield optional)
- Safety glasses
- Gloves (leather, nitrile, neoprene, latex);
- Disposable or non-disposable fireman type over boots
- Safety glasses or chemical splash goggles.
- Dust/particulate mask

5.9.2 Site Specific PPE

For the duration of this project the following PPE are required:

The PPE that will be required by personnel working in the exclusion zones include disposable or dedicated overboots, work gloves, or if handling soils, nitrile gloves, hard hats and safety glasses. Level D PPE can be worn in the support zone.

Continuous air monitoring by the HSO will determine whether a respirator is required as normally required for level C. Air monitoring will be done with portable instruments (e.g., PID). These instruments will be used frequently each day as the job progresses to determine the levels of contaminants in the breathing zone (approximately 5-6 feet above ground) throughout the task. The HSO may also require use of a respirator based upon windy and dusty conditions spreading contaminated particulate. The HSO may additionally require double gloves (leather over latex or nitrile) and/or a full face shield based upon monitoring and Site conditions.

5.10 Noise

Operations involving elevated noise levels (i.e., heavy equipment operations, building demolition, powered hand tools, etc.) will be performed in accordance with the Hearing Conservation Program.

The type of construction equipment intended for use would comply with environmental noise standards. Historical measurements have indicated that all of the equipment to be utilized at the site produce noise less than the OSHA 90 dBA standard within a few feet of the machines. Since the work will be completed in fenced exclusion zones, the perimeter fencing will provide a buffer zone to ensure that the noise levels well below environmental standards to a person standing at the edge of the fence line.

5.11 Material Handling (Ergonomics)

Employees performing manual materials handling (i.e., lifting, carrying, or moving materials) will use proper lifting techniques (guidance is available from the HSS).

5.12 Respiratory Protection

All respirator wearers are expected to have a medical evaluation, qualitative fit test (level C), quantitative fit test (level B) and respirator training. It is very important that respirators are inspected daily, worn properly and maintained as follows:

- The user will inspect respirators after each use by checking the condition of the face-piece and all its parts. Parts will be inspected for pliability and signs of deterioration.

- The face piece and other parts will be washed with soap and water, or appropriate cleaner, and rinsed with distilled water after each use.
- Worn cartridges will be discarded at the end of each day.
- When the respirator is not in use, it will be placed in a clean plastic bag and stored out of sunlight.
- Extreme temperatures and dusty environments should be avoided when cleaning the respirators.
- Any parts that require replacement will be returned to the manufacturer for repair.

The HSO or HSS will provide instruction on the use of APRs for level C or supplied air systems for level B prior to beginning any required work.

5.13 Decontamination

5.13.1 Decontaminating Heavy Equipment and Vehicles

- Heavy equipment and field equipment that will be performing tasks in the exclusion zone shall remain in the EZ until the end of the project or when required for tasks outside of the EZ. Equipment required for tasks outside of the EZ, CRZ or the contaminant control lane will require a dry decontamination. Material which cannot be removed with dry decontamination procedures in the CRZ may be decontaminated using a soapy wash solution following specified rinsing procedures.
- Various equipment may be necessary onsite to decontaminate heavy equipment and vehicles. A pressurized steam sprayer for steam-cleaning equipment and a portable decontamination pad may be mobilized to the Site for this purpose.
- Tanks or drums may be used for storing collected wash and rinse solutions.
- Long-handled brushes for general cleaning of exterior surfaces. Shovels and other equipment may be used to dislodge caked-on contaminated mud on the undercarriage or in the tires.
- Wash and rinse solutions selected for their ability to remove (dissolve, desorb, etc.) contaminants may be used.
- Pressurized sprayers may be used for washing and rinsing, particularly hard-to-reach areas.
- Clean buckets will be used to contain cleaning and rinsing solutions.
- Brooms and brushes can be used to clean the interior and operator areas of vehicles and equipment.

5.13.2 Full Decontamination Procedures for Level B, C, and Modified D PPE

Workers shall use the following cleaning and decontamination procedures when exiting the EZ. These procedures should be followed when workers are leaving the area for lunch, at the end of a shift, or when work is completed for an EZ. Not all steps apply to every situation; follow applicable procedures. Decontamination procedures shall start at the EZ/CRZ interface and continue away from the EZ toward the SZ.

a. Equipment drop: Deposit used equipment onto plastic drop cloths or into a plastic-lined tub. Remove all gross contamination; complete fine cleaning and equipment decontamination here or elsewhere. Before moving equipment that is still contaminated wrap and tape it.

b. Outer boot and glove: Wash/remove gross contamination from outer boots, outer gloves, and SCBA and/or airline equipment.

c. Tape removal: Remove tape from ankles and wrists. If tape is contaminated, dispose in plastic-lined drum. If the tape is not contaminated it may be disposed in a waste container.

d. Outer boot removal: Remove outer boots; if contaminated, disposable outer boots may be disposed of in the same waste container used in Step C. If not contaminated, it may be disposed of in a waste container. Nondisposable boots need a thorough cleaning before they can be removed from the Site. (If using nondisposable boots, it is preferable to have them dedicated to the project.)

e. Outer glove removal: Remove and dispose outer gloves; if contaminated gloves may be disposed of in the same waste container as used in Step c. If not contaminated, gloves may be disposed of in a waste container.

f. SCBA and SAR removal (Level B):

   SCBA: With buddy or other Site worker, remove backpack, remove face piece, and shut off airflow.

   Airline: With buddy or other Site worker, remove harness and escape bottle, remove face piece, and shut off airflow.

   When coveralls are significantly contaminated, leave the respirator face piece on, disconnect the air hose just downstream of the regulator, turn off the flow of air, remove the backpack or equipment harness, and leave the face piece in place.

Remove the face piece in Step h.

g. Coverall removal: Rinse coveralls, if needed, remove, if contaminated, dispose of them, again the same drum may be used as in Step c. If not contaminated, dispose coveralls in a waste container. Non-disposable coveralls shall be double-bagged with the outer bag clearly labeled "contaminated."

h. Respirator removal: Remove respirator (or face piece of Level B equipment, if it is still being worn). Dispose of spent cartridges, clean, disinfect, dry, and properly store respirator or face piece.

i. Inner glove removal: Remove and dispose of inner gloves.

j. Exit area: Exit the CRZ via the SZ.

k. Field wash: Wash and rinse hands and face.

l. Re-dress: Re-dress into appropriate PPE for re-entry or change into street clothes.

5.13.3 Partial Decontamination Procedures

To change a respirator cartridge or SCBA tank, follow these procedures:

a. Outer boot and glove wash: Wash outer boots and gloves. Wash/remove gross contamination from SCBA and/or airline equipment.

b. Tape removal: Remove tape from ankles and wrists, if contaminated dispose in a plastic-lined drum. If not contaminated, dispose of tape in a waste container.

c. Face piece removal: Disconnect face piece and air hose just downstream of regulator. Face piece may remain in place, or be removed and cleaned. Remove the spent tank from the backpack and replace it with a full tank. Connect air hose and turn on air.

d. Respirator removal: Remove respirator, remove used cartridges, clean and disinfect respirator, install new cartridges, and don respirator.

e. Respirator check: Check to make sure that respirator still seals properly to your face.

f. Don clean PPE. Put on clean outer gloves, tape wrists (as applicable), and re-enter EZ.

5.13.4 When taking a rest break, follow these procedures

a. Outer boot and glove wash: Wash outer boots and gloves. Wash/remove gross contamination from SCBA and/or airline equipment.

b. Tape removal: Remove tape from ankles and wrists and dispose of it in a plastic-lined drum if contaminated. If not contaminated dispose of tape in a waste container.

c. Respirator removal: Remove SCBA unit, airline harness, or respirator, and place in a clean area. Plastic sheeting may be needed.

d. Coverall removal: Remove coveralls completely.

e. Inner glove removal: Remove and dispose of inner gloves.

f. Wash: Wash and rinse hands and face at the field wash station.

g. Rest break: Take rest break, remember to drink plenty of water, Gatorade, or similar beverage.

h. Don inner gloves: Put on inner gloves.

i. Don PPE: Don coveralls, outer boots, and outer gloves. Tape wrists and ankles (as needed), and re-enter the EZ.

5.13.5 Closure of the Decontamination Station

- All disposable clothing and plastic sheeting used during activities at sites with modified Level D through Level C will be double-bagged and disposed of in a refuse container.
- Decontamination and rinse solutions and disposable PPE from Level B sites will be placed in a labeled 55-gallon drum (separate solids and liquids) for later analysis and disposal.
- All washtubs, pails, buckets, etc., will be washed and rinsed at the end of each workday.

5.14 Biological Hazards

5.14.1 Fauna

Several species of animals can present significant hazards to Site personnel. Hazards associated with fauna contact arise from 3 situations: parasitic contact, defensive contact, and disease-inspired contact.

Parasitic contact involves animals who require mammalian blood for food or reproductive needs (i.e. ticks, mosquitoes, leaches, etc.). Repellent, protective clothing and visual checks are the recommended way to cope with parasitic contacts. First aid in instances of contact may include removal of parasite from host, disinfecting wound and bandaging the wound. A discussion of Lyme disease and Rocky Mountain Spotted Fever can be obtained from the HSM.

Contact between humans and aggressive fauna can result in a defensive response from the animal, particularly if the animal is surprised or cornered. Animals such as raccoons, rats, bees, and snakes, are but a few of the species that will defend themselves aggressively. It is important to recognize that these animals may be present on the Site, the habitats the animals prefer, and how to avoid contact with them. First aid requirements would vary as to the type of animal encountered.

Recent proliferation of rabies throughout the east coast has greatly increased the potential for human contact with the disease. Therefore, contact with any wild, feral, or domestic animal found at a Site should be avoided. Particularly aggressive animal behavior should be reported to the HSO. Any injuries due to this type of contact require immediate medical attention.

Heavily vegetated areas of the Site may have ticks, and tick bites are a common pathway for disease transmission. Lyme disease, in particular, has spread throughout the northeast and is transmitted by the deer tick, which are very small (somewhat like the head of a pin). Ticks also transmit Rocky Mountain Spotted Fever. The symptoms for both diseases include a rash around the bite, chills, headache, fatigue, stiff neck, and bone pain. Removed ticks will be saved and labeled in the event that symptoms occur. Victim will seek medical attention should any of these symptoms arise.

It is highly recommended that all personnel walking through such areas wear a minimum of a Tyvek coverall or equivalent and latex boot covers. The ticks will stand out against the light colors. A tick repellent or insect repellent is also suggested.

Bee, wasp, and insect stings are usually nuisances (localized swelling, itching, and minor pain) that can be handled by first-aid treatment. The greatest hazard and most-common cause of fatalities from bees, wasps and insects, is from a sensitivity reaction (acute allergic reactions).

Shocks due to stings can lead to severe reactions in the circulatory , respiratory , and central nervous systems, which also can result in death. Two out of ten individuals are susceptible to bee sting allergic reactions.

If an assigned employee has a history of allergic reactions to stings, they will be required to have their prescribed treatment with them, and will notify Site Health and Safety personnel and the OSC of the location and prescribed treatment of the antidote. All stings or bites will be taken seriously. Anyone stung or bitten will be required to stop work while that person is observed for signs of severe swelling, shortness of breath, nausea, or shock. Additionally, anyone stung or bitten will be required to notify Site Health and Safety personnel and the OSC immediately. If there is any doubt, medical attention will be obtained.

5.14.2 Flora

Many species of plants have developed defenses against predation that can pose safety risks for Site workers. The HSO will identify plants that could cause lacerations, dermal reactions, and respiratory distress. Recommended procedures for addressing flora biological hazards are:

For thorny plants (i.e. rosa ragussa, wild rose, cat briar) mark off plants with caution tape, wear puncture resistant PPE, disinfect, and bandage any wounds received;

For plants that cause respiratory problems (i.e. goldenrod, ragweed, mold, etc.) plan work on upwind side if possible during the pollination and seeding seasons. Additionally, vines may pose an entanglement hazard on the Site if they are present in the work area. Noting whether vines are poison ivy and taking the appropriate precautions, vines will be removed to allow for safe performance of Site activities.

For plants causing dermal reactions (i.e. poison ivy, poison oak, and poison sumac), mark off plants with caution tape, wear gloves and PPE when handling plants, wash exposed skin thoroughly as soon as possible after exposure, and treat allergic skin reactions according to severity. Never burn these plants.

Some of the most common and most severe allergic reactions result from contact with plants of the poison ivy group including poison ivy and poison sumac. Such plants produce severe rash characterized by redness, blisters, swelling, and intense burning and itching. The victim also may develop a high fever and may be very ill. Ordinarily, the rash begins within a few hours after exposure, but may be delayed for 24 to 48 hours.

The most distinctive features of poison ivy are their leaves, which are composed of three leaflets. The plant also has greenish-white flowers and berries that grow in clusters. Poison Sumac grows as a woody shrub or a small tree, at heights ranging from 5 to 25 feet tall.

5.14.3 Bloodborne Pathogens

Bloodborne pathogens are not visible and may be overlooked as a biological hazard; however, Site workers are likely to come in contact with these organisms more frequently than any other biological hazard. Areas such as waste piles, sewage discharges, and rusted metallic surfaces as well as insect and animal bites are all potential sources of pathogens. All injuries, therefore, will be reported to the HSO who will provide first aid and follow-up with necessary medical surveillance. The HSO will be trained and familiar with the LEA bloodborne pathogen program.

6. SAFETY ENGINEERING PROCEDURES

6.1 Excavation and Trenching

- Excavation activities will be conducted during daylight.
- Personnel scheduled for these activities shall be familiar with the requirements of the OSHA excavation standard.
- Any trench over 5 feet deep will require shoring or sloping back appropriately. Trenches will not be left uncovered or unprotected at the end of the day.
- In many instances, Site personnel will be required to work in and around various types of excavations. Assessments of soil and excavation conditions must be made continuously while work is being done in order to maintain a safe working environment. Serious harm and fatalities have occurred when changes in the soil or excavation conditions have gone unnoticed; therefore, the following items are required of all Site personnel:
    - Excavated material, equipment and debris shall be kept a minimum of 2 feet from the rim of the excavation; Excavations greater than 5 feet in depth must be benched, sides sloped at 2:1 (horizontal to vertical), or provided with shoring and bracing;
    - No person will enter any excavation containing water without actively shoring the side walls.
- Excavations will be inspected daily by the HSO for indications of possible cave-ins, failure of protective systems, hazardous atmospheres or other conditions that could present a safety hazard.
- The HSO will remove workers from any excavation found unsafe until necessary precautions to ensure their safety have been instituted.
- All trenches 25 feet long and 4 feet deep must be equipped with 2 remote means of egress. Ladders used for egress will have recessed rungs, secured at the top of the excavation, have a recommended slope of 4:1 (vertical to horizontal), and extend at least two rungs above excavation.
- Heavy equipment movement around any excavation should be minimized. Additional stronger shoring capable of restraining the additional forces will be provided if heavy equipment movement is necessary near the excavation.
- The atmosphere within the excavation shall be monitored continuously while any Site worker is in the excavation.

6.2 Electrical Safety

- All electrically powered equipment and extension cords will be used in accordance with the national Electric Code and OSHA standard.
- All electrically powered equipment shall be Underwriters Laboratories- (UL) approved and grounded by a cord having an identified grounding conductor and multi-contact polarized plug-in receptacle.
- All extension cords used on-site will be equipped with ground fault circuit interrupters.
- Electrically powered equipment and extension cords shall be visually inspected for damage before each use.
- Equipment found defective shall be removed from service and properly tagged until repaired.
- The HSO will inform Site workers of any known electrical exposures (e.g., utility lines, equipment or tools). However, it is the responsibility of all personnel to exercise caution when working with or around electrical equipment or utility lines.
- The following safety precautions shall be undertaken when assigned Site activities require that work be done in close proximity to electrical lines. Any work closer than 10 feet or with equipment that could come within a 10 foot radius of high voltage overhead lines requires a formal safety evaluation and approval of the HSM.
- Any electrical circuits that pose a potential exposure on the job site will be de-energized and locked out. Lockout will consist of a padlock, and a red tag. The tag will identify the time, date and type of work to be completed and the expected time and date of completion.
- Unprotected energized utility lines near proposed excavations will be de-energized before excavation begins, if possible, with the same padlock and red tag system;
- Any utility lines that must remain energized will be identified by the HSO and their location marked in red on the plot plan and other work documents. All possible efforts must be made to avoid contact with electrical power lines.
- All personnel working near energized electrical lines will follow a safe work procedure approved by the HSO and use approved electrically insulated equipment; all temporary wiring must be protected, off of the ground, and inspected daily for any signs of degradation;
- All personnel will use the following safety precautions when operating electrical tools:

a. Electrical equipment using temporary 120-volt, single phase, 15 and 20-ampere receptacle outlets must use a ground fault interrupter (GFI) or be part of an effective grounding conductor program (29 CFR 1926.404). The HSO will determine the appropriate requirements for the grounding conductor program.
b. Emergency generators used will be grounded via a properly inserted ground rod. Gasoline for these generators will only be handled in safety cans and properly stored away from sources of ignition.
c. All electrical equipment, power cords, and GFCI's shall be inspected daily for any signs of degradation. Intrinsically safe tools with explosion proof wiring will be used in all areas where flammable vapors or liquids could potentially exist;
d. Grounding capability of all systems will be tested weekly.
e. All electrically powered equipment shall be Underwriters Laboratories-(UL) approved and grounded by a cord having an identified grounding conductor and multi-contact polarized plug-in receptacle.
f. All extension cords used onsite will be equipped with ground fault circuit interrupters.
g. Electrically powered equipment and extension cords shall be visually inspected for damage before each use.
h. Equipment found defective shall be removed from service and properly tagged until repaired.

6.3 Heavy Equipment

Hazards associated with heavy equipment include equipment backing resulting in struck by, damage to the equipment, contact with above and underground utility lines, and high noise levels. To minimize accidents involving heavy equipment, all equipment must have operational back-up alarms, personnel must make eye-to-eye contact with the operator before approaching and utilize proper hand signals when communicating, and Site personnel are to avoid equipment swing areas.

All onsite operations involving heavy equipment will be performed in accordance with the OSHA standards. Heavy Equipment includes backhoes, bulldozers, and dump trucks used during excavation and soil screening.

- Excavators and other heavy equipment must be inspected daily.

- Mobile equipment must have backup alarms, adequate mirrors, and flag person if necessary.
- Booms of excavators must not come any closer than ten feet to overhead electric lines. If necessary, call the HSS for approval and appropriate precautions.
- Before digging, call the DIG Safe number to prevent rupturing underground utility lines.
- Only trained operators are allowed to operate heavy equipment.

6.4 Lockout/Tagout

Information and training on lockout/tagout procedures will be provided by the HSS or HSM if deemed necessary. It will only be performed in accordance with OSHA standards.

6.5 Machine Guarding

Information and training on machine guarding will be provided by the HSS or HSM if deemed necessary. Service and maintenance will only be performed in accordance with OSHA standards.

6.6 Powered Hand Tools

Information and training on powered hand tools will be provided on a daily basis by the HSO during briefings and on the job.

6.7 Vehicles

All trucks on the Site must have double mirrors and a backup alarm.

- A flag person must be used if necessary.
- Vehicles must be inspected daily.
- Vehicles must be equipped with seat belts and emergency equipment including wheel chocks, reflectors, a first aid kit, and fire extinguisher.
- Drivers must have the proper class license for the trucks that they are driving.

6.8 Walking/Working Surfaces (ladders, ramps, scaffolds, and walkways)

- The Site shall be inspected daily by the HSO to maintain safe surfaces. Deficiencies shall be corrected as soon as possible.
- Ladders shall be inspected before use; aluminum ladders shall not be used.
- The HSM will approve the use, type, and dimensions of ramps and scaffolds.

7. ENVIRONMENTAL SAFETY PROCEDURES

7.1 Spills

A spill procedure must be readily available and all Site workers trained in its use. This means that air monitoring equipment, spill equipment, first aid equipment and PPE must be readily available.

7.2 Waste Management and Shipping

All containers being moved or shipped must be appropriately labeled in accordance with OSHA, EPA and DOT regulations. Containers being shipped must be accurately listed on the shipping manifest. All other DOT regulations including placarding of the vehicle must be complied with.

TABLE 5-1
POTENTIAL CHEMICAL CONTAMINANTS

1,1,1-Trichloroethane	4,4'-DDE	Chromium
1,1'-Biphenyl	4,4'-DDT	Chrysene
1,1-Dichloroethane	4-Chloro-3-methylphenol	cis-1,2-Dichloroethene
1,2,3,4,6,7,8-HpCDD	4-Chloroaniline	Cobalt
1,2,3,4,6,7,8-HpCDF	4-Chlorotoluene	Copper
1,2,3,4,7,8,9-HpCDF	4-Methylphenol	Cyanide
1,2,3,4,7,8-HxCDD	4-Nitrophenol	Dalapon
1,2,3,4,7,8-HxCDF	Acenaphthene	delta-BHC
1,2,3,6,7,8-HxCDD	Acenaphthylene	Dibenzo(a,h)anthracene
1,2,3,6,7,8-HxCDF	Acid Volatile Sulfide	Dibenzofuran
1,2,3,7,8,9-HxCDD	Aldrin	Dieldrin
1,2,3,7,8,9-HxCDF	alpha-BHC	Diethylphthalate
1,2,3,7,8-PeCDD	alpha-Chlordane	Di-n-Butylphthalate
1,2,3,7,8-PeCDF	Aluminum	Di-n-octylphthalate
1,2,3-Trichlorobenzene	Anthracene	Endosulfan I
1,2,4,5,7,8-hexachloro(9H)xanthene	Antimony	Endosulfan II
1,2,4-Trichlorobenzene	Aroclor, Total	Endosulfan Sulfate
1,2,4-Trimethylbenzene	Aroclor-1016	Endrin
1,2-Dichlorobenzene	Aroclor-1221	Endrin Aldehyde
1,2-Dichloroethane	Aroclor-1232	Endrin Ketone
1,3,5-Trimethylbenzene	Aroclor-1242	Ethylbenzene
1,3-Dichlorobenzene	Aroclor-1248	Fluoranthene
1,4-Dichlorobenzene	Aroclor-1254	Fluorene
2,3,4,6,7,8-HxCDF	Aroclor-1260	gamma-BHC
2,3,4,7,8-PeCDF	Arsenic	gamma-Chlordane
2,3,7,8-TCDD	Atrazine	Heptachlor
2,3,7,8-TCDF	Barium	Heptachlor Epoxide
2,4,5-T	Benzaldehyde	Hexachlorobutadiene
2,4,5-TP (Silvex)	Benzene	Indeno(1,2,3-cd)pyrene
2,4,5-Trichlorophenol	Benzo(a)anthracene	Iron
2,4-D	Benzo(a)pyrene	Isopropylbenzene
2,4-DB	Benzo(b)fluoranthene	Lead
2,4-Dichlorophenol	Benzo(g,h,i)perylene	m&p-Xylene
2,4-Dimethylphenol	Benzo(k)fluoranthene	Magnesium
2,4-Dinitrotoluene	Beryllium	Manganese
2-Chlorophenol	beta-BHC	MCPA

2-Chlorotoluene	bis(2-Ethylhexyl)phthalate	MCPP
2-Methylnaphthalene	Butylbenzylphthalate	Mercury
2-Methylphenol	Cadmium	Methoxychlor
3+4-Methylphenols	Calcium	Molybdenum
4,4'-DDD	Carbazole	Naphthalene
Nickel	Chlorobenzene	n-Butylbenzene
N-Nitroso-di-n-propylamine	OCDD	Pentachlorophenol
n-Propylbenzene	OCDF	Phenanthrene
p-Isopropyltoluene	o-Xylene	Phenol
Potassium	sec-Butylbenzene	Silver
Pyrene	Selenium	Sodium
Styrene	Tetrachloroethene	Total HpCDD
Technical Chlordane	Thallium	Total HpCDF
tert-Butylbenzene	Toluene	Total HxCDD
Total HxCDF	Total Volatile Organics	Trichlorofluoromethane
Total PeCDD	Total Xylenes	Vanadium
Total PeCDF	Toxaphene	Zinc
Total Semi-Volatile Organics	Toxicity Equivalency	Trichloroethene
Total TCDD	trans-1,2-Dichloroethene	Total TCDF

APPENDIX A
EMERGENCY INCIDENT REPORT FORM

EMERGENCY INCIDENT REPORT

INSTRUCTIONS: This form will be completed after the occupancy of any emergency situation.

LEA PERSONNEL: List all LCI personnel involved in the incident.

1) _____	5) _____
2 _____	6) _____
3 _____	7) _____
4) _____	8) _____

OUTSIDE PERSONNEL: List all outside personnel involved in the incident.

1) _____	5) _____
2 _____	6) _____
3 _____	7) _____
4) _____	8) _____

DESCRIBE THE INCIDENT: Describe all events and responses. Attach additional pages as necessary.

_____
_____
_____
_____
_____
_____
_____
_____
_____
_____
_____

FIRST AID: Describe all first aid procedures performed. Attach additional pages as necessary.

_____
_____
_____
_____
_____

EMERGENCY SERVICES: List all emergency services and contracts.

_____
_____

DAMAGED EQUIPMENT: List all damaged equipment.

_____
_____
_____

Describe the current status of the situation.

_____
_____
_____

APPENDIX B
ACCIDENT REPORT FORMS

EMPLOYER'S FIRST REPORT OF INJURY

State of Rhode Island
Department of Labor
Division of Workers' Compensation
610 Manton Ave., P.O. Box 3500
Providence, RI 02909-0500
Phone: (401) ~~272-0700~~ 457-1800 TDD: (401) 457-1888

DWC No.: _____

Insurer's No.: _____

EMPLOYEE INFORMATION:

Soc. sec. no. _____ ____ M ____ F
Name _____
Address _____
City, state, zip _____
Phone _____ Date of birth _____
Occupation _____ Date Employed _____

EMPLOYER INFORMATION:

FEIN _____
Name _____
Address _____
City, state, zip _____
Phone _____
Type of business _____ SIC Code _____

INSURANCE CARRIER:

FEIN _____
Name _____
Address _____
City, state, zip _____
Phone _____

ADJUSTING COMPANY:

FEIN _____
Name _____
Address _____
City, state, zip _____
Phone _____

INJURY INFORMATION:

Injury date _____

Time of injury _____ ____ am ____ pm
Time workday began _____ ____ am ____ pm

Date employer notified _____
First full day lost from work _____

Has employee returned to work? ____ yes ____ no
If yes, date returned to work _____

Place where injury occurred (include city and state)
_____
_____
_____

Injury occurred on employer's premises? ____ yes ____ no
Employee paid in full for day of injury? ____ yes ____ no

Has the employee died? ____ yes ____ no
If yes, date of death _____

Describe how the injury occurred _____
_____
_____

Give the injured body parts and the kind of injury sustained. (Examples: Broken left index finger, lower back strain, heart attack, etc.) _____

MEDICAL INFORMATION:

Treatment facility _____
Address _____
City, state, zip _____
Phone _____

WITNESS INFORMATION:

Name _____
Address _____
City, state, zip _____
Phone _____

_____ _____
EMPLOYER'S SIGNATURE DATE

FOR DIVISION USE ONLY

SIC	OWN	COUNTY	TIME A	TIME W	DOB	GENDER	LOS	OCC	NATURE	PART	SOURCE	TYPE	AOS

DWC-01 (10/92)

APPENDIX C
CERTIFICATION FORMS

PLAN ACCEPTANCE FORM

SITE HEALTH AND SAFETY PLAN

I have read and agree to abide by the contents of the Health and Safety Plan for the following project:

_____

_____

Name

_____

Signature

_____

Date

Return to the HSO or HSS **before** starting work on the subject project work Site.

APPENDIX D
MONITORING LOGS

AIR MONITORING LOG

SITE:_____

ACTIVITY:_____

_____

PERSONNEL:_____

INSTRUMENTS USED (INCLUDE LAST CALIBRATION DATE):

_____

_____

_____

DATE/TIME	LOCATION	INSTRUMENT	READING

MONITORING PERFORMED BY:_____

NAME DATE

AIR PURIFYING RESPIRATOR LOG

SITE:_____

LOCATION:_____

DATES OF INVESTIGATION:_____

User	Date of Use	Cleaned and inspected prior to use (initials)	Cartridges changed prior to use (yes, no, na)	Total hours on cartridge

Site Health and Safety Officer or

Project Manager

Date

Return to Office Health and Safety Representative at the completion of field activities.

SCBA RESPIRATORY LOG

SITE:_____

LOCATION:_____

DATES OF INVESTIGATION:_____

User	Date of Use	SCBA #	Satisfactory Check-Out (Yes, NO, N/A)	Date Cleaned

Site Health and Safety Officer or

Project Manager

Date

Return to Office Health and Safety Officer

APPENDIX E
MEETING MINUTES

APPENDIX B

Sample Access Agreement

CONSENT FOR ACCESS TO PROPERTY

NAME: **«Title»«First_Name»«Last_Name»**

ADDRESS OF PROPERTY: **«Address_of_Owner»**

I (We) consent to allowing Loureiro Engineering Associates, Inc. ("LEA"), its authorized representatives and contractors, and the United States Environmental Protection Agency ("EPA"), its officers, employees, agents, contractors, consultants, and other authorized representatives, to enter and have continued access to the above-referenced property for the following purposes:

- Taking soil, water, sediment, and air samples as required by EPA;
- Clearing of ground vegetation (large trees and other substantial plant growth will be protected to the extent practical) in order to collect soil and sediment samples and to excavate soil and sediment;
- Drilling or excavating holes for subsurface investigation;
- Taking other actions related to the investigation of surface or subsurface soil and sediment;
- Excavation of soil and sediment and related activities, including but not limited to dust control measures, dewatering, air monitoring, material stockpiling and temporary storage, and management of excavated soil and sediment;
- Surveying and monitoring the performance of remedial activities;
- Revegetation and site restoration; and
- Conducting any other response actions required by EPA.

All remedial activities will be performed in accordance with EPA requirements. If required by the EPA, additional activities will be performed, and LEA will advise me (us) in advance of those activities. I (We) understand that LEA will notify us at least seven days prior to initially accessing my (our) property.

I (We) also understand that LEA is not a representative or agent of the EPA with respect to liability associated with the Site.

This written permission is given by me (us) voluntarily with knowledge of our right to refuse and without threats or promises of any kind.

_____ _____

Date Signature of Property Owner or Owner's Authorized Representative

Name: _____

Title: _____

Address: _____

_____

_____

Phone: _____

CONSENT OF ADDITIONAL PROPERTY OWNER(S)

_____ _____

Date Signature of Property Owner or Owner's Authorized Representative

Name: _____

Title: _____

Address: _____

_____

_____

Phone: _____

Attach additional sheets if necessary.

APPENDIX C

Field Sampling Plan

DRAFT

FIELD SAMPLING PLAN
CENTREDALE MANOR RESTORATION SUPERFUND SITE
NORTH PROVIDENCE, RHODE ISLAND

August 3, 2001

Prepared for

CENTREDALE MANOR PERFORMING PARTIES GROUP
c/o Swidler Berlin Shereff Friedman LLP
3000 K Street, NW Suite 300
Washington, DC. 20007

Prepared by

LOUREIRO ENGINEERING ASSOCIATES, INC.
100 Northwest Drive
Plainville, Connecticut

Comm. No. 15RP101.001

Table of Contents

		Page
1.	**PROJECT INTRODUCTION**	**1-1**
2.	**DATA SUMMARY AND EVALUATION**	**2-1**
2.1	Investigation History	2-1
2.2	Summary of Contamination	2-1
2.3	Existing Data Gaps	2-2
3.	**FIELD SAMPLING**	**3-1**
3.1	Mobilization	3-1
3.1.1	LEA Mobilization/Demobilization	3-1
3.2	Action Area Soil and Sediment Sampling	3-2
3.2.1	Sampling Objectives	3-2
3.2.2	Sample Locations	3-2
3.2.3	Sample Analysis	3-3
3.2.4	Sample Designation	3-4
3.2.5	Sampling Equipment and Procedures	3-5
3.2.5.1	Soil Sampling	3-5
3.2.5.2	Sediment Sampling	3-6
3.2.6	Sample Handling and Storage	3-8
3.3	Excavation Confirmatory Sampling	3-8
3.3.1	Sampling Objectives	3-8
3.3.2	Sample Locations	3-9
3.3.3	Sample Analysis	3-9
3.3.4	Sample Designation	3-10
3.3.5	Sampling Equipment and Procedures	3-10
3.3.6	Sample Handling and Storage	3-10
3.4	Dewatering and Decontamination Wastewater Sampling	3-10
3.4.1	Sampling Objectives	3-11
3.4.2	Sample Locations	3-11
3.4.3	Sample Designation	3-11
3.4.4	Sample Analysis	3-11
3.4.5	Sampling Equipment and Procedures	3-11
3.4.6	Sample Handling and Storage	3-12
3.5	Waste Container Characterization	3-12
3.5.1	Sampling Objectives	3-12
3.5.2	Sample Locations	3-12
3.5.3	Sample Analysis	3-12
3.5.4	Sample Designation	3-13
3.5.5	Sampling Equipment and Procedures	3-13

3.5.6 Sample Handling and Storage 3-13
3.6 Survey 3-13
3.7 Equipment Decontamination 3-14
3.8 QA/QC Sampling and Analysis 3-15
3.9 Investigation-Derived Waste 3-15
3.9.1 Drum Labeling 3-16
3.9.2 Transportation and Disposal Subcontractor 3-16
3.9.3 Documentation 3-16
3.9.4 Hazardous Waste Manifesting Compliance 3-17

TABLES

Table 1-1 Proposed Sampling Locations
Table 3-1 Delineation, Characterization, and Confirmatory Sampling Summary
Table 3-2 Extraction Method Summary
Table 3-3 Quality Control Analysis Summary
Table 3-4 Required Containers, Preservatives, and Analysis Holding Times for Solid, Aqueous, and Vapor Samples

FIGURES

Figure 1-1 Proposed Sampling Locations, Action Area 1
Figure 1-2 Proposed Sampling Locations, Action Area 2
Figure 1-3 Proposed Sampling Locations, Action Area 3
Figure 1-4 Proposed Sampling Locations, Action Area 4
Figure 1-5 Proposed Sampling Locations, Action Area 5
Figure 1-6 Proposed Sampling Locations, Action Area 6
Figure 1-7 Proposed Sampling Locations, Action Area 7
Figure 1-8 Allendale Dam (To Be Reconstructed)
Figure 1-9 Proposed Sampling Locations, Action Area 9
Figure 1-10 Proposed Sampling Locations, Action Area 10
Figure 1-11 Proposed Sampling Locations, Action Area 11
Figure 1-12 Proposed Sampling Locations, Action Area 12
Figure 3-1(a) LEA Internal Chain of Custody
Figure 3-1(b) Severn Trent Laboratory Chain of Custody
Figure 3-2 Sample Labels
Figure 3-3 Custody Seal
Figure 3-4 Field Sampling Record
Figure 3-5 Sample Roll-off Sampling Method

DRAWINGS

Drawing 3-1 Site Plans (see Implementation Work Plan)
Drawing 3-2 Site Plans (see Implementation Work Plan)
Drawing 3-3 Site Plans (see Implementation Work Plan)

Drawing 3-4 Site Plans (see Implementation Work Plan)

ACRONYMS

AVS/SEM	Acid Volatile Sulfide/Simultaneous Extracted Metal analysis
BEI	Bennett Environmental Inc.
bgs	below ground surface
CERCLA	Comprehensive Emergency Response Compensation and Liability Act
COCs	Constituents of Concern
CRSP	Community Relations Support Plan
DQOs	Data Quality Objectives
EE/CA	Engineering Evaluation/Cost Analysis
EIA	Enzyme Immuno Assay
EPA	U.S. Environmental Protection Agency
ESI	Expanded Site Investigation
FSP	Field Sampling Plan
HCX	Hexachloroxanthene
HSP	Health and Safety Plan
IDW	Investigation-Derived Wastes
IT	IT Corporation
IWP	Implementation Work Plan
mg/kg	milligrams per kilogram
ug/kg	micrograms per kilogram
ug/L	micrograms per liter
NTCRA	Non Time Critical Removal Action
PCDDs	Polychlorinated Dibenzo Dioxins
PCDFs	Polychlorinated Dibenzo Furans
PE	Performance Evaluation
POP	Project Operations Plan
QAPP	Quality Assurance Project Plan
QC	Quality Control
PAHs	Polyaromatic Hydrocarbons
PCE	Tetrachloroethylene
PCBs	Polychlorinated Biphenyls
ppb	parts per billion
PPE	Personal Protective Equipment
ppm	parts per million
RCRA	Resource Conservation and Recovery Act
RIDEM	Rhode Island Department of Environmental Management
RSI	Récupère Sol Inc.
SAP	Sampling and Analysis Plan
SIP	Site Inspection Prioritization
SMP	Site Management Plan
SOP	Standard Operating Procedure
SOW	Statement of Work
SSI	Screening Site Investigation
SVOCs	Semivolatile Organic Compounds

TCA	Trichloroethane
2,3,7,8-TCDD	2,3,7,8-Tetrachlorodibenzo-p-dioxin
TCDF	Total Tetrachlorodibenzofuran
TCE	Trichloroethylene
TOC	Total Organic Carbon
TtNUS	Tetra Tech NUS, Inc.
USGS	United States Geologic Survey
VOCs	Volatile Organic Compounds

1. PROJECT INTRODUCTION

This Field Sampling Plan (FSP) has been prepared in support of the Non-Time Critical Removal Action (NTCRA) Statement of Work (SOW) for the Centredale Manor Superfund Site located in North Providence Rhode Island. This FSP establishes all procedures to be followed by the Respondent's Contractor, Loureiro Engineering Associates, Inc. (LEA). to implement the activities described herein.

The objective of the FSP is to provide EPA, RIDEM, and all parties involved with the collection and use of field data with a common written understanding of all fieldwork. More specifically, the overall objectives of the FSP are as follows:

- To document specific objectives, procedures, and rationales for field work and sample analytical work;
- To provide a mechanism for planning and approving Site and laboratory activities;
- To ensure that sampling and analysis activities are necessary and sufficient; and
- To provide a common point of reference for all parties to ensure the comparability and compatibility of all objectives and of sampling and analysis activities.

This FSP documents all anticipated field objectives and activities, including sampling objectives, specific information on the fieldwork to be conducted (including sampling locations and rationale, sample numbers and rationale, and analyses of samples), and standard operating procedures (SOPs) to be followed while performing fieldwork.

Tetra Tech NUS, Inc. (TtNUS) performed an Engineering Evaluation/Cost Analysis (EE/CA) for the Site to evaluate a Non-Time Critical Removal Action (NTCRA) that can be conducted to reduce the exposure to dioxin at the Site. One of the alternatives was singled out as a preferred alternative based on the effectiveness, implementibility and cost. This alternative includes:

- removing all soil and adjacent exposed sediment from residential properties that contains dioxin in excess of 1 part per billion,
- destroying the dioxin in that soil through controlled incineration at an off-site location,
- replacing that soil with clean fill and loam placed to fit the existing grade, and
- restoring the Allendale Dam, and returning Allendale Pond to its original elevation.

Based on the Engineering Evaluation/Cost Analysis (EE/CA) prepared by Tetra Tech NUS, Inc. (TtNUS), the EPA has designated twelve specific areas adjacent to the Woonasquatucket River

where soil and sediment impacted by dioxins are to be excavated, removed from the Site, and incinerated. The scope of work for this FSP involves collection and analysis of soil and sediment from eleven of these twelve areas to further refine the limits of the dioxin impacted soil and sediment. One of the areas designated by the EPA includes Allendale Dam, where no soil and sediment samples will be collected, but soil and sediment will be excavated and disposed of from this area as part of the reconstruction of the dam. The Centredale Manor Site and the twelve areas defined for this investigation is depicted on Drawing 3-1 through 3-4 (Site Plans), included in the Implementation Work Plan (IWP). Figures 1-1 through 1-12 identify the "Proposed Action Areas". Table 1-1 provides a listing of the proposed action areas, the associated plats and lots in each area, the number of samples proposed in each area, and information regarding pertinent sampling locations from previous environmental investigations.

Under this work assignment, LEA will be responsible for performing the following activities: mobilizing and demobilizing for field investigations; locating sample locations; collecting and analyzing soil and sediment; disposing of investigation-derived waste (if necessary), maintenance of a database of analytical data from the samples collected during the implementation phase of the project, and preparation of a Completion of Work Report at the completion of the project in accordance with the reporting requirements identified in the IWP.

Section 2.0 of this FSP provides a brief summary and evaluation of the existing analytical data collected during the previous investigations performed at the Site. Existing data gaps as they relate to the proposed action areas are also discussed.

Section 3.0, Field Sampling, identifies activities for conducting fieldwork to meet the objectives of the NTCRA SOW. The plan addresses the project organization and responsibilities of personnel engaged in performing field investigation activities and the projected sequence of field operations. This FSP includes sampling and analytical objectives; the number and location of all samples to be collected during the excavation delineation sampling; a discussion of subsequent sampling events (if required); a discussion of the methods for collection of confirmatory samples following excavation; a discussion of wastewater sampling and waste container characterization; detailed procedures for field activities; and data management elements. The FSP will be used by LEA's field personnel as a guide for performing all field activities and analytical procedures according to designated, accepted protocols.

2. DATA SUMMARY AND EVALUATION

The Engineering Evaluation/Cost Analysis (EE/CA) performed by TtNUS (dated September 2000) included a summary of the existing universe of data for the Site used in support of the EE/CA and the NTRCA. This summary is provided again in support of the FSP. The summary provides information for soils collected at residential properties, flood plain sediment data, bank sediment data, aquatic sediment data, and surface water data. Residential properties include those in the vicinity of Centredale Manor and Brook Village Apartments, alongside Allendale Pond, and downstream of the Allendale Dam, in the Lymansville reach of the Woonasquatucket River. Flood plain sediments were defined during the October 1999 sampling event by TtNUS as sediment that is periodically inundated with one foot of water or less. The summary of data for the Site is provided in the following paragraphs.

2.1 Investigation History

Four major efforts have produced data that is used to support the EE/CA and the NTCRA. These include sampling conducted in support of the emergency response actions (IT, January 2000), sampling conducted in support of an Expanded Site Investigation (Weston, 1999), sampling conducted as an initial evaluation of dioxin presence at impoundments in the Woonasquatucket River (EPA, 1998) and sampling conducted in 1999 to further characterize sediment contaminants in the Allendale Pond and Lymansville Pond areas (TtNUS, June 2000).

Sampling results supporting the scope of the EE/CA and NTCRA, and this FSP are summarized in the following Section. Drawing 3-1 through 3-4 (Site Plans, presented in the IWP) and present locations of samples described in this section. Figures 1-1 through 1-12 of this FSP present those locations of samples to be addressed in support of the NTCRA SOW.

2.2 Summary of Contamination

Results of analyses from the previous investigations indicate high concentrations of contaminants, including dioxin, HCX, and PCBs in the action areas adjacent to the Centredale Manor, in Allendale Pond and Lymansville Pond. The concentrations of these contaminants tend to be highest in sediment collected from depths less than two feet below the ground surface or sediment surface. Concentrations of dioxins and PCBs appear to decrease with upland distance from the existing shoreline of Lymansville Pond, such that lowest concentrations were found in the samples collected from the highest elevations. This trend appears to also be present for the former shoreline of Allendale Pond, although it is less demonstrable due to the data set available.

Concentrations of PCBs and 2,3,7,8-TCDD appear to be somewhat less in Lymansville Pond than those in Allendale Pond. Maximum concentrations of dioxins and PCBs were generally found in the wetland area between the Centredale Manor portion of the Site and Allendale Pond. These trends are particularly notable in the aquatic sediment.

Other contaminants including PAHs and metals appear to be present in variable concentrations and do not follow a specific pattern that could be identified in this limited evaluation.

2.3 Existing Data Gaps

The FSP is designed to address the existing data gaps on the Site as they relate to the proposed excavation areas located on residential properties along the Woonasquatucket River. Specifically, the data gaps addressed by this FSP include the horizontal and vertical extent of dioxin contamination in the vicinity of the residential areas that were identified in the NTCRA SOW, Attachment 1. Soils and sediment in the vicinity of eleven of these twelve areas (excluding the area of Allendale Dam) will be sampled for the presence of dioxin to further define the extent of soil and sediment that exceed concentrations of 1 ppb and must be removed from the Site. The proposed excavation delineation sampling locations are depicted on Figures 1 through 7 and Figures 9 through 12. The proposed sample locations were centered on previous sample locations that indicated concentrations of dioxin that exceeded 1 ppb. The methodology for performing sampling at these locations, post-excavation confirmatory sampling, and waste sampling is provided in the following section.

3. FIELD SAMPLING

The following sections describe in detail the sampling protocol for the different types of sampling to be performed as part of the NTCRA at the Site. The sampling to be performed is in support of Remedial Alternative 3 described in the EE/CA. The alternative includes the removal and incineration of soils and sediment contaminated with dioxin on residential properties along the Woonasquatucket River, the reconstruction of Allendale Dam and restoration of Allendale Pond. Sampling necessary to complete this alternative include the following: Soil and sediment sampling in proposed action areas to delineate the three-dimensional extent of soil and sediment to be excavated; confirmatory sampling within excavations in Action Areas to ensure that dioxin-contaminated materials with concentrations exceeding or equal to 1 ppb have been removed; sampling of wastewater produced from dewatering and/or decontamination activities), and; waste characterization sampling of containerized debris. Sampling protocol includes the sampling objectives, sample locations, frequency of sampling, sample designations, sampling equipment and procedures, and sample handling, storage and analysis for each type of sample to be collected.

3.1 Mobilization

3.1.1 LEA Mobilization/Demobilization

Prior to beginning any fieldwork, all field team members will review the Implementation Work Plan (IWP). The Field Sampling Plan (FSP) and the Quality Assurance Project Plan (QAPP), the Health and Safety Plan (HASP), and all applicable Standard Operating Procedures (SOPs) included as Appendices to the IWP shall also be reviewed. In addition, a field team orientation meeting will be held prior to beginning the fieldwork to familiarize personnel with the scope of the field activities. All field team members will receive a copy of the FSP prior to the orientation meeting. A record of the field activities orientation meeting will be maintained in the project file.

Equipment mobilization may include, but will not be limited to, transporting and preparing the following equipment:

- Sampling and shipping equipment
- Health and safety equipment
- Decontamination equipment

The Site Superintendent will coordinate the LEA mobilization/demobilization and any equipment purchases necessary to conduct the field investigation. The equipment for the sampling and health and safety activities will be transported to the site as needed.

3.2 Action Area Soil and Sediment Sampling

On the Site, there are twelve proposed action areas requiring the removal of dioxin-contaminated soil and/or sediment as part of this project. The proposed action areas are based on previous environmental sampling performed at the Site that indicated soil and/or sediment samples located on (or in the vicinity of) residential-use soils that exhibit dioxin concentrations equal to or greater than 1 ppb. The action areas are identified as AREAs 1 through 12. One of these action areas includes the dioxin-impacted soil and sediment in the immediate vicinity of Allendale Dam to be reconstructed as part of this project. The action area in the immediate vicinity of Allendale Dam is identified as AREA 8. Soil, sediment and debris in the vicinity of Allendale Dam will be excavated, containerized, characterized and transported off-site for disposal. Pursuant to the NTCRA SOW, all contaminated soils and sediment located in residential-use areas that are impacted with dioxin contamination exceeding 1 ppb are to be excavated, removed from the Site, and incinerated at an offsite location. Soil, sediment and debris requiring incineration shall be transported to Récupère Sol Inc. (RSI), located in Saint-Ambroise, Quebec, Canada. RSI is owned and operated by Bennett Environmental Inc. (BEI) of Montreal, Quebec.

3.2.1 Sampling Objectives

The proposed action areas are identified on Drawings 3-1 through 3-4, Site Plans (presented in the IWP). Each area is also depicted on Figures 1-1 through 1-12 and identify former sampling locations, sampling locations that exceed 1 ppb dioxin in the areas, areas proposed in the TtNUS EECA report identified for excavation and removal from the Site, and the proposed sampling locations to delineate the three dimensional extent of soil and sediment to be excavated. The delineation sampling event is designed to refine the areas of dioxin-impacted soil and sediment to be excavated and removed from the Site.

3.2.2 Sample Locations

The Site has been divided into two distinct halves, the area above Allendale Dam, and the areas downstream of Allendale Dam and above Lymansville Dam. Figures 1-1 through 1-7 identify the action areas located above Allendale Dam, and Figures 1-9 through 1-12 identify action areas downstream of Allendale Dam and above Lymansville Dam.

This investigation will consist of grid-based sampling of soil and/or sediments at 10-foot increments. Specifically, the delineation sampling event will include sampling locations identified by a 10-foot box around the samples collected in each area where dioxin concentrations exceed 1 ppb. Sample locations will also consist of a ten-foot grid extending out from this initial grid (surrounding the "hot" sample). In regards to Area 12 (where a sediment sample was detected that exceeded 1 ppb dioxin, but where no residential soil samples were collected), the sample grid was selected based on a location perpendicular from the sediment sample to the shoreline. Sampling grids for the delineation sampling event are depicted on Drawings 3-1 through 3-4 of the IWP and Figures 1-1 through 1-12.

Subsequent sampling events may be required to further delineate the extent of dioxin contamination. In subsequent sampling events, sample locations will be located in a 10-foot grid around those samples that exhibit the elevated concentrations of dioxin (greater or equal to 1 ppb dioxin). In all of the sampling events, the limits of the sampling locations located above the Allendale Dam (AREAs 1 through 7) will be to the 92.5 elevation, then (if needed) perpendicular from Allendale Pond to the sample locations which exhibit concentrations of dioxin less than 1 ppb dioxin. The limits of the sampling locations in AREAs 9 through 12 will be to one foot below the existing shoreline of Lymansville Pond, then (if needed) perpendicular from Lymansville Pond to the sample locations which exhibit concentrations of dioxin less than 1 ppb dioxin. Laterally, the sample grid shall continue until dioxin concentrations do not exceed 1 ppb.

In all sampling events, the topography of each area may dictate changes in the sampling locations. LEA's field scientist will make a determination in each individual area about changes in sample grid locations based on the topography or other features of the area.

Based on the available information, the delineation sampling round will consist of approximately 234 sampling locations at the Site. Generally, three samples will be collected and analyzed at each location. As such, a total of approximately 732 soil and sediment samples are anticipated to be collected during the delineation sampling event.

3.2.3 Sample Analysis

Samples collected will be analyzed for 2,3,7,8-Tetrachlorodibenzo-p-dioxin (dioxin) by Competitive Enzyme Immunoassay (EIA) methodology at the LEA Analytical Laboratory. No fixed laboratory analysis will be performed on these samples. It should be noted that this is only true for the excavation delineation sampling, and not the confirmatory sampling.

3.2.4 Sample Designation

LEA shall utilize nomenclature for sample location designation that is compatible for entry into LEA's database.

Each sample taken from the study area will be assigned a unique sample location tracking number. The sample location identifiers for the contaminant delineation soil and sediment sampling will consist of a three-segment, alpha-numeric code that identifies the remedial Area on the Site, the type of sample (delineation or confirmatory), and the sequential sample number collected in that action area. Any other pertinent information (Site identification, sample type, sample depth, time of sample collection) regarding sample identification will be recorded in the field paperwork. In addition to this sample location identification system, each sample collected will be assigned a unique seven-digit sample number to be utilized to track the samples in LEA's database.

The alpha-numeric coding to be used in the sample location numbering system is explained in the following diagram and the subsequent definitions:

NN – AAA–NN

AREA – Sample Type - Sequential Sample Number

Character type:

A = Alpha

N = Numeric

1. An identification of what action area the sample was collected from (01, 02, etc.).

2. An identification of the type of sample collected (DEL for excavation delineation samples and CON for confirmatory samples).

3. A sequential sample number identifier for the type of sample collected in the action area. A different set of sequential sample number identifiers will be utilized for each type of sample (DEL and CON).

Using this approach, the sample with the identification 03-DEL-01 is a delineation sample collected in action area 3, and it is the first excavation delineation sample collected from action area 3. Information such as the Site identification, the type of sample, sample depth, the time of

sample collection, and waste container identification will be recorded in the daily field paperwork, and entered into LEA's database. Tables will be generated displaying this information through the database.

3.2.5 Sampling Equipment and Procedures

At each of the sampling locations, LEA will collect soil and sediment samples in the following manner. Samples will be collected following LEA's applicable Standard Operating Procedures (SOPs). Both soil and sediment samples are anticipated to be collected during the excavation delineation sampling event.

3.2.5.1 Soil Sampling

Applicable LEA SOPs for soil sampling are provided as Appendix G to the IWP, and include the following:

10003: Hand Auger Borings
10006: Soil Sampling
10015: Geologic Logging of Unconsolidated Sedimentary Deposits

It should be noted that volatile organic compounds (VOCs) have not been detected at elevated concentrations in the action areas. Therefore, screening with a photoionization detector (PID) will not be performed by LEA personnel. Abandonment of each sample location shall be performed with topsoil (screened and sampled prior to use). The topsoil will be sampled for the analysis of VOCs, SVOCs, PCBs, metals, and ETPH prior to being utilized on the Site.

Soil samples will be collected at each location using hand tools (stainless steel bucket augers, trowels, and spades). All sampling devices are to be decontaminated prior to use following the procedures specified in Section 3.7 of this FSP. The soil sample collection procedure is summarized below:

- Soil samples will be collected from the 0 to 6-inch, 6 to 12-inch, and 12 to 24-inch depth intervals. Soil samples are to be placed in a decontaminated stainless steel mixing bowl.

- The soil samples will be thoroughly mixed and homogenized and transferred to the appropriate sample containers. If standing water is noted on the soil sample, the LEA field technician will attempt to dry the sediment by placing soils on an absorbent pad to wick away water from the sample. The field technician will also make an attempt to prevent larger grained particles (gravel and cobbles) from being included in the sample

to promote homogeneity. Following dewatering the sample, the soil samples will be placed directly into one Teflon®-lined, 4-ounce glass jar (for EIA screening). Soil samples will then be placed into sample coolers.

- A general soil description will be performed by the LEA field scientist following LEA SOP #10015, and will be recorded on a geologic boring log.
- All non-disposable equipment is to be decontaminated after use as described in Section 3.7 of this SAP.
- All samples will be delivered to the LEA Analytical Laboratory by courier under proper Chain of Custody protocol.
- Sample areas on residential properties will be repaired with topsoil to match the surrounding grade and flagged for future location.
- All sampling locations shall be surveyed by the survey Subcontractor during the sampling program using GPS (Global Positioning System) survey equipment with sub-meter accuracy.
- Excess soil will be placed initially into 5-gallon buckets, and transferred into appropriate containers (55-gallon drums or rolloffs). See Section 3.9 for the management of investigation derived wastes.

3.2.5.2 Sediment Sampling

Some of the sample locations may be located under water. Sediment samples will be collected at these locations. Applicable LEA SOPs for soil sampling are provided as Appendix G to the IWP. LEA SOP 10009, Sediment Sampling in Shallow Rivers and Ponds, will be followed during sediment sample collection.

It should be noted volatile organic compounds (VOCs) have not been detected at elevated concentrations in the action areas. Therefore, screening with a photoionization detector (PID) will not be performed by LEA personnel. Abandonment of each sediment sample location will not be performed as the locations are under water.

Sediment samples will be collected at each location using hand tools (stainless steel bucket augers, trowels, and spades), a Geoprobe® macro-core sample tube, or other push-core sampling device. LEA field personnel will make a decision at each sampling location as to the most

appropriate sampling apparatus. All sampling devices are to be decontaminated prior to use following the procedures specified in Section 3.7 of this FSP. The sediment sample collection procedure is summarized below:

- As sediment sampling locations will be located in areas where less than one foot of sediment will potentially be excavated, sediment samples will be collected from only the 0 to 6-inch and 6 to 12-inch depth intervals. Sediment samples are to be placed in a decontaminated stainless steel mixing bowl.

- The sediment samples will be thoroughly mixed and homogenized and transferred to the appropriate sample containers. If standing water is noted on the sediment sample, the LEA field technician will attempt to dry the sediment by placing sediments on an absorbent pad to wick away water from the sample. The field technician will also make an attempt to prevent larger grained particles (gravel and cobbles) from being included in the sample to promote homogeneity. Following dewatering the sample, the sediment samples will be placed directly into one Teflon®-lined, 4-ounce glass jar (for EIA screening). Soil samples will then be placed into sample coolers.

- All non-disposable equipment is to be decontaminated after use as described in Section 3.7 of this SAP.

- All samples will be delivered to the LEA Analytical Laboratory by courier under proper Chain of Custody protocol.

- All sampling locations are to be surveyed by the survey Subcontractor during the sampling program using GPS (Global Positioning System) survey equipment with sub-meter accuracy and staked with oak stakes for future visual location.

- If multiple samples along a shoreline are to be collected from within the river/pond, LEA will begin at the most downstream location and sample in an upstream direction.

- Excess sediment will be placed initially into 5-gallon buckets, and transferred into appropriate containers (55-gallon drums or rolloffs). See Section 3.9 for the management of investigation derived wastes.

It is anticipated that all sediment sample locations can be accessed by personnel in hip-length boots. If locations are inaccessible by wading in hip-length boots, an open workboat will be utilized.

3.2.6 Sample Handling and Storage

This section discusses the activities to be performed by personnel to document the field investigation activities both in the field and in the field trailer. Field sample tracking activities will focus on the timely assignment and tracking of information. Chain-of-custody procedures will be used to maintain, and document, sample possession from collection through analysis. For this reason, the possession of samples will be traceable from the time the samples are collected until they are analyzed and eventually disposed. The following documents will be used to identify sample and document possession:

- Sample labels;
- Chain-of-custody record forms; and
- Field paperwork.

Following sample collection, the sample containers will be placed in coolers and packed appropriately to prevent sample breakage. Freezer packs or ice, packed in plastic bags, will be placed in the coolers to keep the samples at a temperature not exceeding 4^0C during delivery to the LEA Analytical Laboratory. Samples received at the LEA Analytical Laboratory will be placed in a refrigerator/cooler until sample analysis. Figures 3-1(a) (LEA Internal Chain of Custody), 3-2, 3-3, and 3-4 provide examples of the Chains of Custody, sample labels, custody seals, and field sampling record to be utilized by LEA.

3.3 **Excavation Confirmatory Sampling**

The initial soil and sediment sampling performed by LEA will provide additional information regarding the delineation of soil and sediment impacted by dioxin in the action areas proposed for excavation in the NTCRA SOW. However, confirmatory sampling will be required at the bottoms and sidewalls of all excavations to ensure that the impacted soil and sediment has been removed to the maximum extent possible. The following sections describe the sampling methodology to be employed by LEA to collect the confirmatory samples from excavation bottoms and sidewalls.

3.3.1 Sampling Objectives

Post-excavation confirmatory sampling of soil/sediment will be conducted in the areas to be excavated to confirm that residual dioxin concentrations do not exceed 1 ppb at the limits of the excavations. Confirmatory soil sampling will be performed throughout the project as necessary to document the adequacy of the remedial measures as proposed.

3.3.2 Sample Locations

Post-excavation confirmatory soil/sediment samples for dioxin will be collected from the bottom and sidewalls of the excavated areas. Composite samples along the sidewalls of the excavations shall be sampled every 30 feet. Confirmatory samples will also be collected from the bottoms of each excavation. Two composite confirmatory samples will be collected every 900 square feet of excavation bottom.

For sidewall confirmatory sample locations, three aliquots of soil from the 0 to 6 inch, 6 to 12 inch, and 12 to 24 inch intervals shall be collected at three locations equally spaced within each 30-foot of sidewall. The three aliquots of soil from each individual interval shall be mixed in a stainless steel bowl and collected as a composite sample. As such, there will be three samples (one from each depth interval) for every 30 feet of excavation wall. For sidewalls that are less than 30 feet in length, the three sample aliquot locations will be located in evenly spaced intervals across the sidewall and sampled as above.

Confirmatory samples will also be collected from the bottoms of each excavation. Two confirmatory samples will be collected for every 900 square feet of excavation bottom. Five aliquots of soil from the 0 to 6-inch interval shall be collected at five locations equally spaced in the shape of a "five" on a die. The five aliquots of soil shall be mixed in a stainless steel bowl and collected as a composite sample. Therefore, two confirmatory, composite samples will be collected from two "fives" on a die for every 900 square feet of excavation bottom. If there is less than a 900 square-foot excavation, a minimum of two confirmatory, composite samples will be collected.

In confirmatory sampling of both sidewalls and bottoms of excavations, biased samples would be added as appropriate based upon field observations and as needed to adequately represent the sidewalls and bottom of each excavation.

3.3.3 Sample Analysis

Confirmatory samples will be delivered by courier to the LEA Analytical Laboratory for EIA analysis, and overnight to the off-site laboratory. Samples delivered to the off-site laboratory will be placed "on-hold" pending the results of the EIA analysis. Should sample analysis by EIA methodology indicate concentrations of dioxin greater than 500 ppt, additional excavation of the area will be performed. The additional excavations will be performed pursuant to methods described in the IWP. When sample analysis by EIA methodology indicates that concentrations of dioxin does not exceed 500 ppt, the sample (8-ounce jar) will taken "off-hold" at the off-site

laboratory for analysis by EPA Method 8290. Should this confirmatory sample analyzed by the fixed off-site laboratory indicate that dioxin concentrations exceed 1 ppb, then additional excavation of the area will occur as described in the IWP.

3.3.4 Sample Designation

Each confirmatory soil and sediment sample taken from the study area will be assigned a unique sample location identification, and a seven digit tracking number. The sample location identification nomenclature is described in Section 3.2.4.

3.3.5 Sampling Equipment and Procedures

At each of the confirmatory sampling locations, LEA will collect soil and sediment samples in the following manner. Samples will be collected following LEA's applicable Standard Operating Procedures (SOPs). Confirmatory soil and sediment samples are to be collected in the same manner as described in Section 3.2.5, with the exception that in addition to the 4-ounce jar, one Teflon®-lined, 8-ounce glass jar will be collected for the analysis of dioxin at the off-site laboratory by EPA Method 8290. The 8-ounce jar will be placed in a separate cooler from the 4-ounce jars.

For sidewall confirmatory sample locations, the three aliquots of soil from each individual interval shall be mixed in a stainless steel bowl and collected as a composite sample. Confirmatory samples will also be collected from the bottoms of each excavation. The five aliquots of soil from the 0 to 6-inch interval shall be mixed in a stainless steel bowl and collected as a composite sample. Samples will be collected following LEA's SOPs referenced in previous sections of this FSP.

3.3.6 Sample Handling and Storage

Samples shall be handled and stored as described in Section 3.2.6 of this FSP. Figure 3-1(a) presents an example of the LEA Internal Chain of Custody, and Figure 3-1(b) presents an example of the Chain of Custody utilized by Severn Trent Laboratory.

3.4 Dewatering and Decontamination Wastewater Sampling

During the course of investigation activities, decontamination will be performed on an ongoing basis. Decontamination fluids are to be containerized in 55-gallon drums. In addition, some roll-off containers of excavated soil and sediments may require dewatering prior to shipment of the material off-site. Dewatering wastewater will also be containerized in 55-gallon drums. As

the disposal of liquid waste containing dioxins must be shipped to Calgary, Canada for incineration, the cost of this type of waste is considerable. As such, LEA personnel will make an effort to reduce the amount of dewatering wastewater and decontamination fluids generated during investigation activities. Should it become necessary to containerize and dispose of dewatering and decontamination wastewater, the following sampling protocol will be followed.

3.4.1 Sampling Objectives

Prior to disposal, dewatering and decontamination fluids will have to be sampled to characterize the waste. The following sections discuss the collection of these samples.

3.4.2 Sample Locations

Fifty-five gallon drums of dewatering and decontamination wastewater will be stored in the storage area designated in the IWP.

3.4.3 Sample Designation

Each dewatering and decontamination wastewater sample taken from the storage area will be assigned a unique sample location tracking number. Any other pertinent information regarding sample identification will be recorded in the field paperwork. In addition to this sample location identification system, each sample collected will be assigned a unique seven-digit sample number to be utilized to track the samples in LEA's database.

The alpha-numeric coding to be used in the sample location numbering system is explained in the following diagram:

CMS – WW – NNN

Centredale Manor Site – Wastewater Sample – Sequential Samples Number

3.4.4 Sample Analysis

Wastewater drums at the Site will have to be sampled for the following constituents: VOCs, SVOCs, PCBs, total toxicity equivalent dioxins, total toxicity equivalent furans, TPH, mass metals (including arsenic, barium, cadmium, chromium, cobalt, copper, lead, manganese, mercury, molybdenum, nickel, selenium, silver, tin, and zinc), and corrosivity. The EPA analytical and extraction methods are provided in Tables 3-1 and 3-2.

3.4.5 Sampling Equipment and Procedures

For each of the 55-gallon drums of wastewater to be sampled, LEA will collect wastewater in the following manner. Samples will be collected following LEA's Standard Operating Procedure 10027, entitled "Liquid and Sludge Sampling from Drums, Tanks, and Pits". Wastewater will be sampled using a glass coliwasa tube or peristaltic pump. Samples will be placed into the appropriate sampling containers, and placed directly into coolers. Sample jar types are listed in Table 3-4. Samples will be shipped by courier under proper Chain of Custody protocol for analysis at the off-site laboratory.

3.4.6 Sample Handling and Storage

Samples shall be handled and stored as described in Section 3.2.6 of this FSP.

3.5 **Waste Container Characterization**

Some wastes will be generated from construction activities involving demolition activities of the dam structure. This material will be placed in roll-offs prior to being shipped off-site for disposal.

3.5.1 Sampling Objectives

Prior to disposal, demolition debris will have to be sampled to characterize the waste. The following sections discuss the collection of these samples.

3.5.2 Sample Locations

Sampling locations within each roll-off will be selected based on the assumption that a roll-off container will be approximately 30 cubic yards, and it is assumed that each roll-off will be half full. Six sample locations will be selected using a random integer generator. One composite sample will be collected from the six locations. Figure 3-5 provides a sample of the roll-off sampling method to be utilized to collect each composite sample. A new sheet with specifically generated sample nodes will be created for each roll-off to be characterized for off-site disposal under this Section.

3.5.3 Sample Analysis

Roll-off containers with demolition debris and clearing materials at the Site will have to be sampled for the following constituents: VOCs, SVOCs, PCBs, total toxicity equivalent dioxins, total toxicity equivalent furans, TPH, mass metals (including arsenic, barium, cadmium, chromium, cobalt, copper, lead, manganese, mercury, molybdenum, nickel, selenium, silver, tin,

and zinc), and corrosivity. The EPA analytical and extraction methods are provided in Tables 3-1 and 3-2. It should be noted that brush and trees (branches and trunks located above grade) that are cleared from the action areas during on-site activities will be recycled without characterization sampling, pursuant to the IWP.

3.5.4 Sample Designation

Each waste container sample taken from the study area will be assigned a unique sample location tracking number. Any other pertinent information regarding sample identification will be recorded in the field paperwork. In addition to this sample location identification system, each sample collected will be assigned a unique seven-digit sample number to be utilized to track the samples in LEA's database.

The alpha-numeric coding to be used in the sample location numbering system is explained in the following diagram:

CMS – RW – NNN

Centredale Manor Site – Roll-off Waste Sample – Sequential Samples Number

3.5.5 Sampling Equipment and Procedures

For each of the roll-offs to be sampled, LEA will collect a composite sample in the following manner. At each of the six randomly generated grid nodes, LEA personnel will use a decontaminated stainless steel hand auger to collect soil from two-thirds depth of the roll-off. Soil from each of the six grid nodes will be placed into a stainless steel mixing bowl and thoroughly mixed. Samples will be placed into the appropriate sampling containers, and placed directly into coolers. Sample jar types are listed in Table 3-4. Samples will be shipped, by courier, under proper Chain of Custody protocol for analysis at the off-site laboratory.

3.5.6 Sample Handling and Storage

Samples shall be handled and stored as described in Section 3.2.6 of this FSP.

3.6 **Survey**

For the purposes of this SAP, a professional surveyor licensed in the State of Rhode Island will perform surveying activities on the Site as described in this Section and Section 2 of the IWP. Survey activities will initially include the following:

Above Allendale Dam:

- Survey the 92.5 foot, 93.5 foot elevations and 10-year flood elevation,
- If needed, locate previous sampling locations in AREA 1 through 7,
- After identified and sampled by LEA field personnel, survey grid sampling locations.

Between Allendale Dam and Lymansville Dam:

- Survey the limits of each proposed action area one foot below the existing shoreline of Lymansville Pond in the vicinity of AREAs 9 through 12 and the 10-year flood elevation,
- If needed, locate previous sampling locations in AREAs 9 through 12,
- After identified and sampled by LEA field personnel, survey grid-sampling locations.

Sample locations will be identified with an oak stake or flag with the sample identification number denoted on each stake. Additional surveying activities may be required if additional sampling is needed to delineate dioxin-contaminated areas to be excavated.

After the sampling and delineation of dioxin in each area is performed, excavation activities will commence pursuant to the IWP. Excavations will require confirmatory sampling to ensure that dioxin contamination has been removed from each action area (see Section 3.3). The Surveyor will locate the limits of all excavations and the locations of all confirmatory sample locations.

3.7 Equipment Decontamination

This section provides guidelines for decontamination of equipment used during the field investigation. Personnel decontamination issues are discussed in the HASP.

All non-disposable sampling and testing equipment that comes in contact with the sample medium (trowels, bowls, shovels, etc.) will be decontaminated to prevent cross-contamination between sampling points, as described below:

- Brush to remove gross contamination,
- Potable water and detergent (Alconox or Liquinox) wash and scrub with brush,
- Rinse with potable water,
- Rinse with DIUF water (analyte free),

- Rinse with 2-propanol,
- Rinse with hexane,
- Air dry (to the extent practical) on aluminum foil or in a strainer
- Wrap in aluminum foil for transport (or if not being used immediately).

LEA field personnel will make attempts to minimize the amount of decontamination fluids generated during sampling activities.

3.8 QA/QC Sampling and Analysis

The quality control (QC) samples that will be collected or generated during the soil and sediment, confirmatory sampling, and stockpile sampling are described below. The QC samples will also be performed for the EIA sampling, with the exception of the performance evaluation sampling. A detailed discussion of the objectives, procedures, and collection rates for each type of QC sample is provided the QAPP.

Equipment Blanks: Equipment blanks will be collected at the rate of one for ten samples.

Field Duplicates: Field duplicates will be collected at a rate of one for every ten samples per analysis. LEA will allow for duplicate samples to be collected by EPA and/or RIDEM personnel at their request.

Performance Evaluation (PE) Samples: PE samples will be sent to the off-site laboratory for analysis by EPA Method 8290 (confirmatory sampling only) at a rate of one for every 20 samples per analysis.

Based on the available information, the delineation sampling event will consist of approximately 186 sampling locations at the Site. Generally, three samples will be collected and analyzed at each location. As such, a total of approximately 558 soil and sediment samples are anticipated to be collected during the delineation sampling event. Based on the number of samples above, 56 duplicate samples are anticipated to be collected and analyzed by EIA Methodology.

The limits of the excavations will dictate the number of confirmatory samples to be collected at the Site. QA/QC samples listed above will be collected at the above frequencies during confirmatory sampling.

3.9 Investigation-Derived Waste

Investigation-derived waste generated by the project will be limited to excess sample material, personal protective equipment (PPE) and decontamination fluids. All IDW will be stored in the

storage area identified in the IWP. LEA will follow the State of Rhode Island Department of Environmental Management "Guidelines for the Management of Investigation Derived Waste". Sample results from previous soil sampling, and the most recent sampling, will be used to characterize this waste to the extent possible. Decontamination fluids from equipment decontamination will be containerized in 55-gallon drums will be labeled in accordance with the above guidance document and other appropriate regulatory requirements and will be stored in the containment area identified in the IWP until disposed of off-site. Excess soil and sediment generated during sampling activities will be placed initially into 5-gallon buckets and transferred to 55-gallon drums or rolloffs in the containment area identified in the IWP.

The personal protective equipment (PPE) waste generated during work will be placed into a drum liner and disposed of in rolloffs at the completion of each day's work.

3.9.1 Drum Labeling

After decontamination fluids are drummed and the lid clamped tight, the drum will be marked using a waterproof indelible ink marker; an example follows:

- IDW-CMS-01 - (Investigation Derived Waste - Centredale Manor Site - drum #01)
- Date first accumulated: e.g. 08/30/01
- Source(s) of material: Sample lD Numbers
- Volume and type of total material

Drum labeling is necessary to identify materials stored in the drums and to evaluate how the drummed material will be sampled for waste characterization.

3.9.2 Transportation and Disposal Subcontractor

If necessary, a licensed hazardous waste transportation and disposal subcontractor will be required to transport and dispose of any non-hazardous and hazardous waste streams generated during the investigation. The subcontractor will be procured to transport and dispose the IDW waste to approved off-site disposal facilities.

3.9.3 Documentation

On a daily basis, the site superintendent or designee will document the generation of IDW during the investigative activities to ensure that the IDW is properly containerized and stored at the staging area. Information will be recorded in a bound notebook. Daily records of decontamination fluids stored in drums will include the following information:

- Drum No. (Unique Identification Number)
- Date first accumulated
- Source of material
- Volume of material
- Sample lD# (consistent with soil sample ID numbers described in Section 2.3.4).

3.9.4 Hazardous Waste Manifesting Compliance

Wastes generated from field sampling activities will be manifested, transported and disposed in accordance with the procedures and requirements described in the IWP. Copies of all documentation of control and disposal of IDW generated by the project will be provided to the U.S. EPA in the Completion of Work Report. Copies will also be maintained in the project file located at LEA's field office trailer.

TABLES

TABLE 1-1

Field Sampling Plan
Proposed Sampling Locations

Centredale Manor Restoration Superfund Site
North Providence, Rhode Island

AREA	Nearby Plats/Lots	Number of Proposed Samples	Samples > 1ppb Dioxin	Conc. Dioxin (ppt)	Northing	Easting	Elevation
AREA 1	Plat14/Lots 268,270,271	16 samples	CMS-456	2100	281819.5	331910.5	91.95
AREA 2	Plat 14/Lot 272,302	16 samples	CMS-123	2100	281571.6	332022.6	
AREA 3	Plat 14/Lots 333, 303	28 samples	CMS-483	2760	281285.4	332112.9	96.56
			CMS-159	3380	281321.9	332087.3	
			Res-14-333-03	2380	281349.5	332101.6	98.969
			Res-14-333-01	1380	281350.1	332089.5	93.856
			CMS-167	3000	281271.8	332086.2	0
AREA 4	Plat 14/Lot 398,366	12 samples	CMS-221	1990	280942.7	332182.4	
AREA 5	Plat 14/Lot 399,418	9 samples	CMS-193	9900	280821.9	332212.4	
AREA 6	Plat 14/Lot 419,420	16 samples	CMS-206	4500	280521.5	332387.6	
	Plat 14/Lot 419	12 samples	CMS-205	13300	280521.5	332337.6	
	Plat 14/Lot 419	12 samples	CMS-202	2530	280621.6	332282.5	
AREA 7	Plat 12/Lot 554	13 samples	CMS-476	5420	279898.5	333170.8	96.03
	Plat 12/Lot 554		CMS-477	8860	279898.6	333152	91.8
AREA 8	Area in the vicinity of Allendale Dam, no samples to be collected in area.						
AREA 9	Plat 11/Lot 424,425,426	13 samples	Res-11-425-01	1500	277546.1	333747	81.302
AREA 10	Plat 11/Lot 497,396	16 samples	Res-11-396-01	1110	277118.5	334116.8	83.299
AREA 11	Plat 10/68,74,71	12 samples	LPX-SD-2050	6310	276212.6	334178.3	78.8
AREA 12	Plat 10/632,91	12 samples	LPX-BK-2007	1060	275612.6	334467.6	88.252

Table 3-1

Centredale Manor Superfund Site
North Providence, Rhode Island

Field Sampling Plan
Confirmatory Sampling Summary

Sample Type	Sample Media	Anticipated Number of Samples	Laboratory Analytical Methods (USEPA)
Confirmatory	Soil/Sediment	Unknown	SW846-8290, Rev 0. 1994 (PCDD/Fs)
Disposal/ Characterization	Soil/Sediment	Unkown	SW846-8082, Rev. December 1996(PCB) SW-846-8260B Rev. December 1996 (VOC) SW-846-8270C Rev. December 1995 (SVOC) SW-846-6010B Rev. December 1996 (ICP Metals) SW-846-7010 Rev. January 1998 (GFAA Metals) SW-846-7471A Rev. January 1998 (Mercury–Cold Vapor) EPA-418.1 Total Petroleum Hydrocarbons SW846-8290, Rev 0. 1994 (PCDD/Fs) Corrosivity

Notes:

1. Bottom samples are collected at a frequency of 1 sample per every 900 square feet of excavation bottom. For excavations less than 900 square feet, one composite sample will be collected. Bottom samples are collected at a depth of 0 to 6 inches. See FSP for further details.
2. Sidewall samples are collected at a frequency of 1 sample per every 30 feet of sidewall from intervals of 0 to 6 inches, 6 to 12 inches, and 12 to 24 inches. See FSP for further details.
3. PCB = Polychlorinated Biphenyls
   VOC = Volatile Organic Compounds
   TPH = Total Petroleum Hydrocarbons
   BNA = Base Neutral and Acid Extractable
   SVOC = Semi-Volatile Organic Compounds
   ICP = Inductively Coupled Plasma
   MTBE = Methyl tertiary butyl ether
   PAH = Polynuclear Hydrocarbons
   GFAA = Graphite Furnace Atomic Absorption Spectrometry
   PCDD/Fs = PolyChlorinated DibenzoDioxins and PolyChlorinated DibenzoFurans

Table 3-2

Centredale Manor Superfund Site
North Providence, Rhode Island

Field Sampling Plan
Extraction Method Summary

Analytical Method	Matrix	Extraction Method (as applicable)
SW-846 Method 8082	Soil / Sediment	3550B, 3540C, 3541
SW-846 Method 8270C	Soil / Sediment	3550B, 3540C, 3541, 3545, 3545, 3560, 3561
SW-846 Method 8260B	Soil / Sediment	5030B, 5035
SW-846 Method 8290	Soil / Sediment	8290
EPA 418.1	Soil / Sediment	3550B
SW-846 6010B	Soil / Sediment	3050B, mercury 7471A, TCLP 1311, SPLP 1312

Table 3-3

Centredale Manor Superfund Site
North Providence, Rhode Island

Field Sampling Plan
Quality Control Analyses Summary

Environmental Sample Matrix / Laboratory Parameters	Estimated Environmental Sample Quantity	Field QC Analyses						Estimated Matrix Total	Laboratory QC Analyses								Est. Overall Total
		Trip Blank		Field Duplicate		Equipment Blank [a]			MS [a]		MSD[a]		SB [a]		PE Sample		
		Freq	No.	Freq	No.	Freq	No.		Freq	No.	Freq	No.	Freq	No.	Freq.	No.	
Post-Excavation Confirmation Sediment/Soil Samples																	
VOC, SVOC, PCB, TPH, PCDD/Fs, Metals, Cyanide	Unknown TBD	1/Day	TBD	1/20	TBD	1/20	TBD	Unknown TBD	1/20	TBD	1/20	TBD	1/20	TBD	1/20	2	Unkown TBD

Notes:

1. Table assumes that samples will be processed in groups of 20 samples for QC analyses. If smaller sample groups are processed, then one MS/MSD (or MS/laboratory dup) per sample delivery group (up to 20 samples) will be prepared for each sample delivery group.
2. [a] = These field and laboratory QC analysis shall be performed at a frequency of 1/20 or 1/week, whichever comes first. Table assumes samples will be collected at a rate of 20 samples per week.
3. PCB = Polychlorinated Biphenyls.
   SVOC = Semi-Volatile Organic Compounds
   VOC = Volatile Organic Compounds
   TPH = Total Petroleum Hydrocarbons
   PCDD/Fs = PolyChlorinated DibenzoDioxnins and PolyChlorinated DibenzoFurans
4. NA: Not applicable.
5. TBD: To be determined
6. MS = Matrix Spike MSD = Matrix Spike Duplicate
   SB = Surrogate Blank PE = Performance Evaluation Sample

Table 3-4
Required Containers, Preservatives, and Analysis
Holding Times for Solid, Aqueous, and Vapor Samples

Soil/Solid Sample			
Fraction	**Sample Container**	**Preservative**	**Holding Time**
TCL Volatiles	2-40 ml glass screw cap vials with Teflon septa	Cool to 4 C.	14 days
TCL Semivolatiles	1-8 oz. glass w/Teflon lined enclosure.	Cool to 4 C.	14 days till extraction/40 days to inject extract
TCL Organochlorine Pesticides/PCBs	from same 8 oz. above	Cool to 4 C.	14 days till extraction/40 days to inject extract
hexavalent chromium	from same 8 oz. above	Cool to 4 C.	48 hours
TAL metals plus Tin	from same 8 oz. above	Cool to 4 C.	28 days Hg & 180 days all other metals
Dioxins	1-4 oz. glass w/Teflon lined enclosure (EIA) 1-8 oz. glass w/Teflon lined enclosure (8290)	Cool to 4 C.	30 days till extraction/45 days to complete analysis
Trip Blank, Field Blank or Aqueous Sample			
Fraction	**Sample Container**	**Preservative**	**Holding Time**
TCL Volatiles	2-40 ml glass screw cap vials with Teflon septa	HCl to pH <2, Cool to 4 C.	14 days
TCL Semivolatiles	2-1 liter amber glass with Teflon lined cap	Cool to 4 C.	7 days extraction/40 days to inject
TCL Organochlorine Pesticides/PCBs	2-1 liter amber glass with Teflon lined cap	Cool to 4 C.	7 days extraction/40 days to inject
TAL Metals plus Tin	1-1 liter HDP	HNO to pH<2	28 days Hg & 180 days all other metals
Dioxins	2-1 liter amber glass with Teflon lined cap	Cool to 4 C.	30 days extraction/45 days to complete analysis
hexavalent chromium	1-500 ml HDP	Cool to 4 C.	24 hours

NOTES:
1 - Depending on how sample analyses are distributed between the laboratories, additional sample bottles may be required.
2 - Holding times are from the date of sample collection.

FIGURES

1973480001

100 Northwest Drive, Plainville, CT 06062 (860) 747-6181

Internal Chain of Custody/Sample Information Form

Project Name:
Project Location:
LEA Comm. No.:
Project Manager:
Sampling Event Date: ____/____/____

Sampling Method:
Matrix: Soil Vapor Water Other:
Container Type:
Sample Source: Monitoring Well / Vapor Probe / Vapor Extraction Well / Soil Boring / Other
Sampled By:

No.	Qty	Sample Number	Time	Mass (grs)	PID/FID Reading	Sample Class	Comments
1							
2							
3							
4							
5							
6							
7							
8							
9							
10							
11							
12							
13							
14							
15							
16							
17							
18							
19							
20							

Signature	Time

Additional Comments

Rev.By
Investigt. Rev.By

Transfer Number	Item Number(s)	Transfer: Relinquished By	Transfer: Accepted By	Date	Time
1					
2					
3					
4					

Sample Class Codes
SB: soil - boring or pit - must include depths from ground or floor surface
SS: soil - surface - do not include depth
GW: ground water - must include depth from reference point
SW: surface water
SL: sludge
CC: concrete chip
AS: asphalt
WP: wipe
VP: vapor probe
EEQ: equipment blank
VEEQ: vapor equipment blank
BKT: trip blank
VBKT: vapor trip blank
BKF: field blank
VBKF: vapor field blank
OT: other - describe in comments

FIELD SAMPLING PLAN
CENTREDALE MANOR SUPERFUND SITE, NORTH PROVIDENCE, R.I.

LEA INTERNAL
CHAIN OF CUSTODY

Comm. No.
15RP101

FIGURE 3-1(A)

LEA

15RP101-Fig3-1234
chain-custody.pcx

G:\Autocad\PROJECTS\15RP101\TASK001\15RP101-Fig3-1234.dwg, 08/11/01 03:49:54 PM

[redacted]

Chain of Custody Record

STL-4124 (1200)

Severn Trent Laboratories, Inc.

Client	Project Manager	Date	Chain of Custody Number 076698
Address	Telephone Number (Area Code)/Fax Number	Lab Number	Page ____ of ____
City / State / Zip Code	Site Contact	Lab Contact	
Project Name and Location (State)	Carrier/Waybill Number		
Contract/Purchase Order/Quote No.			

Sample I.D. No. and Description (Containers for each sample may be combined on one line)	Date	Time	Matrix: Air	Aqueous	Sed.	Soil	Other	Containers & Preservatives: HNO3	H2SO4	NaOH	ZnAc	HCl	NaOH/ZnAc	Analysis (Attach list if more space is needed)	Special Instructions/ Conditions of Receipt

Possible Hazard Identification: ☐ Non-Hazard ☐ Flammable ☐ Skin Irritant ☐ Poison B ☐ Unknown

Sample Disposal: ☐ Return To Client ☐ Disposal By Lab ☐ Archive For ____ Months (A fee may be assessed if samples are retained longer than 3 months)

Turn Around Time Required: ☐ 24 Hours ☐ 48 Hours ☐ 7 Days ☐ 14 Days ☐ 21 Days ☐ Other ____

QC Requirements (Specify)

	Date	Time		Date	Time
1. Relinquished By			1. Received By		
2. Relinquished By			2. Received By		
3. Relinquished By			3. Received By		

Comments

DISTRIBUTION: WHITE - Stays with the Sample; CANARY - Returned to Client with Report; PINK - Field Copy

FIELD SAMPLING PLAN
CENTREDALE MANOR SUPERFUND SITE, NORTH PROVIDENCE, R.I.

SEVERN TRENT LABORATORY
CHAIN OF CUSTODY

Comm. No. 15RP101

FIGURE 3-1(B)

LEA

15RP101-Fig3-1234
FIGURE 3-1B.TIFF

G:\Autocad\PROJECTS\15RP101\TASK001\15RP101-Fig3-1234.dwg, 08/11/01 03:46:25 PM

Sample ID 1973480
0000100 001 [redacted]
LEA
LEA VOC Scan
Date: __/__/__ Time: __:__

Sample ID 1973480
0000100 001 [redacted]
LEA
VOC Scan
Date: __/__/__ Time: __:__

Sample ID 1973480
0000100 001 [redacted]
LEA
VOC Scan
Date: __/__/__ Time: __:__

Sample ID 1973481
0000100 001 [redacted]
LEA
LEA VOC Scan
Date: __/__/__ Time: __:__

Sample ID 1973481
0000100 001 [redacted]
LEA
VOC Scan
Date: __/__/__ Time: __:__

Sample ID 1973481
0000100 001 [redacted]
LEA
VOC Scan
Date: __/__/__ Time: __:__

Sample ID 1973482
0000100 001 [redacted]
LEA
LEA VOC Scan
Date: __/__/__ Time: __:__

Sample ID 1973482
0000100 001 [redacted]
LEA
VOC Scan
Date: __/__/__ Time: __:__

Sample ID 1973482
0000100 001 [redacted]
LEA
VOC Scan
Date: __/__/__ Time: __:__

Sample ID 1973482
0000100 001 [redacted]
LEA
LEA VOC Scan
Date: __/__/__ Time: __:__

Sample ID 1973482
0000100 001 [redacted]
LEA
Miscellaneous Analyses
Date: __/__/__ Time: __:__

Sample ID 1973483
0000100 001 [redacted]
LEA
LEA VOC Scan
Date: __/__/__ Time: __:__

Sample ID 1973483
0000100 001 [redacted]
LEA
VOC Scan
Date: __/__/__ Time: __:__

Sample ID 1973483
0000100 001 [redacted]
LEA
VOC Scan
Date: __/__/__ Time: __:__

Sample ID 1973483
0000100 001 [redacted]
LEA
Miscellaneous Analyses
Date: __/__/__ Time: __:__

FIELD SAMPLING PLAN
CENTREDALE MANOR SUPERFUND SITE, NORTH PROVIDENCE, R.I.

SAMPLE LABELS

Comm.No. 15RP101

FIGURE 3-2

LEA

15rp101-Fig3-1234
Samp-label.pcx

G:\Autocad\PROJECTS\15RP101\TASK001\15RP101-Fig3-1234.dwg, 08/11/01 03:50:36 PM

FIELD SAMPLING PLAN
CENTREDALE MANOR SUPERFUND SITE, NORTH PROVIDENCE, R.I.

CUSTODY SEAL

Comm.No.		
15RP101	FIGURE 3-3	LEA

15RP101-Fig3-1234-Custody-seal.pen

G:\Autocad\PROJECTS\15RP101\TASK001\15RP101-Fig3-1234.dwg, 08/11/01 03:51:07 PM

Loureiro Engineering Associates, Inc.

FIELD SAMPLING RECORD
MISCELLANEOUS SAMPLES

LEA Comm. No.: 0000100.001 — Page ____ of ____

Project: General Office & Administration — Date: ____/____/____

Location: LEA

Client: Loureiro Engineering Associates, PC

Sample ID	Location ID	Time	Sample Type	Depth (ft)	PID/FID Reading	Comments	Waste Container ID

Samples sent to LEA Laboratory must be accompanied by Form leacust.rpt
Groundwater Samples must be accompanied by Form fsdrg1.rpt

Field Personnel: _____

_____

_____

_____

Signature: _____

FIELD SAMPLING PLAN
CENTREDALE MANOR SUPERFUND SITE, NORTH PROVIDENCE, R.I.

FIELD SAMPLING RECORD

Comm.No.		
15RP101	FIGURE 3–4	LEA

15RP101–Fig3–1234
Fsamp–record.pcx

G:\Autocad\PROJECTS\15RP101\TASK001\15RP101-Fig3-1234.dwg, 08/11/01 03:52:13 PM

Figure 3-5
Sample Roll-Off Sampling Method
Centredale Manor Superfund Site
NorthProvidence, Rhode Island

Basis for Sampling:

1 Roll-Off Container, 30 Cubic Yards, assumed to be 1/2 full.

Contaminants:

Volatile Organic Compounds and Metals

Characterization Sampling:

Select six sample locations at random (see below)
Collect 6 additional samples for metals, composite six into single sample
Select 2 of 6 samples for VOCs

Approach:

Grid roll-off at two depth profiles, 1/3 depth and 2/3 depth. Do not sample top 1/3 depth soils to eliminate non-representative soils which may have volatilized.

Sampling:

Total grid nodes = 16
Sample at 6 randomly selected grid nodes
Screen all six samples for VOCs
Select two highest for analysis for VOCs
Composite 6 samples to a single sample for analysis for RCRA 8 metals plus copper, nickel, zinc by mass and TCLP.

Random Integer Generator:

Node Number =	13
Node Number =	13
Node Number =	7
Node Number =	3
Node Number =	7
Node Number =	16

Therefore, sample at nodes : 13 13 7 3 7 16

1	2	3	4	
5	6	7	8	

Grid at 1/3 Depth

9	10	11	12	
13	14	15	16	

Grid at 2/3 Depth

QA/QC Samples: 1 Duplicate; 1 Equipment

APPENDIX D

Quality Assurance Project Plan

DRAFT

QUALITY ASSURANCE PROJECT PLAN
CENTREDALE MANOR RESTORATION SUPERFUND SITE
NORTH PROVIDENCE, RHODE ISLAND

August 1, 2001

Prepared for

CENTREDALE MANOR PERFORMING PARTIES GROUP
c/o Swidler Berlin Shereff Freidman, LLP
3000 K Street, NW, Suite 300
Washington, DC

Prepared by

LOUREIRO ENGINEERING ASSOCIATES, INC.
100 Northwest Drive
Plainville, Connecticut

LEA Comm No. 15RP101.001

Forward

The QAPP discusses objectives and QA/QC protocols to be used to achieve the Data Quality Objectives (DQOs) for the delineation and removal of selected soils and sediments associated with the Centredale Manor Restoration Project Superfund Site. The above mentioned soils are associated with concentrations of polychlorinated dibenzodioxins and polychlorinated dibenzofurans in excess of 1 part per billion (ppb) as 2,3,7,8-tetrachlorodibenzodioxin toxicity equivalents (TEQ). This Quality Assurance Project Plan (QAPP) is organized to parallel the USEPA document QA/R-5, "EPA Requirements for Quality Assurance Project Plans for Environmental Data Operations," Final, March 2001.

Certain aspects of this QAPP are referenced in other documents included in the Implementation Work Plan. A crosswalk between this QAPP and other documents is included as Table 1-4

ACRONYMS

bgs	below ground surface
CMRSS	Centredale Manor Restoration Superfund Site
COCs	Constituents of Concern
CRZ	Contamination Reduction Zone
DOT	Department of Transportation
DQOs	Data Quality Objectives
EIA	Enzyme Immuno Assay
EE/CA	Engineering Evaluation/Cost Analysis
EPA	U.S. Environmental Protection Agency
EZ	Exclusion Zone
FMR	Field Modification Record
FSP	Field Sampling Plan
HASP	Health and Safety Plan
HSM	Health and Safety Manager
HSO	Health and Safety Officer
HSP	Health and Safety Plan
HSS	Health and Safety Supervisor
IWP	Implementation Work Plan
LIMS	Laboratory Information System
mg/kg	milligrams per kilogram
ug/kg	micrograms per kilogram
ug/L	micrograms per liter
NAPL	Non aqueous Phase Liquid
NTCRA	Non Time Critical Removal Action
OSHA	Occupational Health and Safety Agency
PCDDs	Polychlorinated Dibenzo Dioxins
PCDFs	Polychlorinated Dibenzo Furans
PE	Performance Evaluation
POP	Project Operations Plan
QAPP	Quality Assurance Project Plan
QAM	Quality Assurance Manager
QC	Quality Control
PAHs	Polyaromatic Hydrocarbons
PARCC	Precision, Accuracy, Representativenss, Completeness, Comparability
PCE	Tetrachloroethylene
PCBs	Polychlorinated Biphenyls
ppb	parts per billion
PPE	Personal Protective Equipment
ppm	parts per million
RCRA	Resource Conservation and Recovery Act
RIDEM	Rhode Island Department of Environmental Management

RPD	Relative percent difference
RPM	Remedial Project Manager
RSD	Relative Standard Deviation
RSI	Récupère Sol Inc.
SAP	Sampling and Analysis Plan
SOP	Standard Operating Procedure
SOW	Statement of Work
SSI	Screening Site Investigation
START	Superfund Technical Assessment and Response Team
STL	Severn Trent Laboratories, Inc.
SVOCs	Semivolatile Organic Compounds
TCA	1,1,1-Trichloroethane
2,3,7,8-TCDD	2,3,7,8-Tetrachlorodibenzo-p-dioxin
TCDF	Total Tetrachlorodibenzofuran
TCE	Trichloroethylene
TOC	Total Organic Carbon
TSA	Technical System Audit
TtNUS	Tetra Tech NUS, Inc.
USGS	United States Geologic Survey
USACE	US Army Corps of Engineers
VOCs	Volatile Organic Compounds

PROJECT MANAGEMENT AND OBJECTIVES

1 TITLE AND APPROVAL SHEET

Site Name/Project Name: *Centredale Manor Restoration Superfund Site*
Site Location: *North Providence, RI*

Document Title: ***Quality Assurance Project Plan, Centredale Manor Restoration Superfund Site, North Providence, Rhode Island***

Lead Organization (Agency, State, Tribe, Federal Facility, PRP, or Grantee): ***Centredale Manor Performing Parties Group***

Preparer's Name and Organizational Affiliation: ***Jefferson R. Berdeen/Loureiro Engineering Associates, Inc.***

Preparer's Address and Telephone Number: ***100 Northwest Drive, Plainville, CT 06062, (860) 747-6181***

Preparation Date (Day/Month/Year): ***07/09/2001***

Investigative Organization's Project Manager:

Signature/Date

Scott Miller, PE/Loureiro Engineering, Inc.

Printed Name/Organization

Investigative Organization's Project QA Officer:

Signature/Date

Nick D. Skoularikis/Loureiro Engineering Associates, Inc.

Printed Name/Organization

Lead Organization's Project Manager:

Signature/Date

Mr. Jerome C. Muys, Jr./Swidler Berlin Shereff Friedman, LLP

Printed Name/Organization

Approval Signature:

Signature/Date

Anna Krasko, EPA NE

Printed Name/Title

EPA Region I

Approval Authority

Other Approval Signatures:

Signature/Date

Andy Beliveau/EPA QA Reviewer/Lead Chemist

Printed Name/Title

Document Control Number: ***CMRSS00001***

2 TABLE OF CONTENTS AND DOCUMENT CONTROL FORMAT

2.1 Table of Contents

		Page
PROJECT MANAGEMENT AND OBJECTIVES		**1**
1	**TITLE AND APPROVAL SHEET**	**1**
2	**TABLE OF CONTENTS AND DOCUMENT CONTROL FORMAT**	**2**
2.1	Table of Contents	2
2.2	Document Control Format	6
2.3	Document Control Numbering System	6
2.4	EPA-NE QAPP Worksheet #2 - Rev. 10/99	7
3	**DISTRIBUTION LIST AND PERSONNEL SIGN-OFF SHEET**	**11**
4	**PROJECT ORGANIZATION**	**11**
4.1	Project Task Organization	11
4.2	Communication Pathways	11
4.3	Roles and Responsibilities	11
4.3.1	Centredale Manor Performing Parties Group	11
4.3.2	LEA	12
4.3.3	Severn Trent Laboratories, Inc	13
4.4	Special Training Requirements/Certification	14
5	**PROJECT PLANNING/PROBLEM DEFINITION**	**15**
5.1	Project Planning Meetings	15
5.2	Problem Definition Background	15
6	**PROJECT/TASK DESCRIPTION AND SCHEDULE**	**17**
6.1	Project Overview	17
6.2	Project Schedule	17
7	**PROJECT QUALITY OBJECTIVES AND CRITERIA FOR MEASUREMENT DATA 17**	
7.1	Project Quality Objectives	17
7.1.1	Residential and Bank Soil Data Quality Objectives	18
7.1.2	Sediment Sampling Data Quality Objectives	18
7.2	Measurement Performance Criteria	18
7.2.1	Delineation Sampling	20
7.2.2	Post-Excavation Confirmatory Soil/Sediment Sampling	21
7.3	Disposal Characterization Sampling	23
7.3.1	Data Uses	23
7.3.2	Data Type	23
7.3.3	Data Quality	23
7.3.4	Data Quantity	23
7.3.5	Sampling and Analytical Methods	24
7.3.6	Precision and Accuracy Quality Control Limits (PARCC) Parameters	24

MEASUREMENT/DATA ACQUISITION 24
8 SAMPLING PROCESS DESIGN 24
8.1 Rationale for the Design 25
8.1.1 Procedures for Locating and Selecting Environmental Samples 25
9 SAMPLING PROCEDURES AND REQUIREMENTS 25
9.1 Sampling Procedure 25
9.1.1 Sample Containers, Preservation and Holding Times 26
9.2 Sampling SOP Modifications 27
9.3 Cleaning and Decontamination of Equipment/Sample Containers 27
9.4 Field Equipment Calibration 27
9.5 Field Equipment Maintenance 27
9.6 Inspection and Acceptance Requirements for Supplies / Sample Containers 28
10 SAMPLE HANDLING, TRACKING AND CUSTODY REQUIREMENTS 28
10.1 Sample Collection Documentation 28
10.1.1 Field Notes 28
10.1.2 Field Documentation Management System 28
10.2 Sample Handling and Tracking System 29
10.2.1 Sample Numbering 29
10.2.2 Sample Labels 29
10.2.3 Sample Packaging 29
10.3 Sample Custody 30
10.3.2 Sample Log Sheets 32
10.3.3 Packing List/Chain-Of-Custody Record and Custody Seal 32
11 SCREENING LABORATORY METHOD REQUIREMENTS 32
11.1 Field Analytical/Screening Laboratory Methods and SOPs 32
11.2 Field Analytical/Screening Laboratory Method/SOP Modifications 32
11.2.1 Field Modification Record 32
11.2.2 Screening Laboratory SOP Modifications 33
11.3 Field Analytical/Screening Laboratory Instrument Calibration 33
11.4 Field Analytical/Screening Laboratory Instrument/Equipment Maintenance, Testing, and Inspection Requirements 33
11.5 Field Analytical/Screening Laboratory Inspection and Acceptance Requirements for Supplies34
11.5.1 Field Supplies and Consumables 34
11.5.2 Laboratory Supplies and Consumables 34
12 FIXED LABORATORY ANALYTICAL METHOD REQUIREMENTS 34
12.1 Fixed Laboratory Methods and SOPs 34
12.2 Fixed Laboratory Method/SOP Modifications 34
12.3 Fixed Laboratory Instrument Calibration 35
12.4 Fixed Laboratory Instrument/Instrument Equipment, Maintenance, Testing, and Inspection requirements 35
12.5 Fixed Laboratory Inspection and Acceptance Requirements for Supplies 35
13 QUALITY CONTROL REQUIREMENTS 35

13.1 Sampling Quality Control 35
13.1.1 Rinsate Blank 35
13.1.2 Field Duplicates 36
13.1.3 Trip Blanks 36
13.1.4 Temperature Blanks 36
13.1.5 Field / Laboratory QC Samples 36
13.2 Analytical Quality Control 36
13.2.1 Method Blanks 37
13.2.2 Matrix Spike/Matrix Spike Duplicates (MS/MSD) 37
13.2.3 Surrogates 37
13.2.4 Calibration Standards 38
13.2.5 Internal Standards 38
13.2.6 Reference Standards 39
14 DATA ACQUISITION REQUIREMENTS (NON-DIRECT MEASUREMENT) 39
15 DOCUMENTATION, RECORDS, AND DATA MANAGEMENT 39
15.1 Project Documentation and Records 39
15.2 Screening Laboratory Data Package Deliverables 39
15.3 Fixed Laboratory Data package Deliverables 40
15.4 Data Reporting Formats 41
15.5 Data Handling and Management 41
15.6 Data Tracking and Control 41
15.7 Field Data Reduction 42
15.7.1 Sample Log Sheets 42
15.7.2 Packing List/Chain-Of-Custody Record and Custody Seal 42
15.7.3 Field Modification Record 42
15.8 Analytical Data Report Format 43
15.8.1 Data Recording 43
15.8.2 Data Validation 43
15.8.3 Data Transmittal 43
ASSESSMENT/OVERSIGHT 44
16 ASSESSMENTS AND RESPONSE ACTIONS 45
16.1 Planned Assessments 45
16.1.1 Readiness Reviews 45
16.1.2 Surveillance 45
16.1.3 Technical System Audit 45
16.1.4 Audit of Data Quality 45
16.1.5 Performance Audits 45
16.1.6 Internal System Audits 46
16.1.7 Laboratory Audits 46
16.1.8 Performance Evaluation Audit 46
16.2 Assessment Findings and Corrective Action Responses 47
16.3 Additional QAPP Non-conformances 47

17 REPORTS TO MANAGEMENT 47
17.1 Internal Reporting 48
17.2 Work Plan Reporting 48
17.3 Progress Reports 48
DATA VALIDATION AND USABILITY 48
18 VERIFICATION AND VALIDATION REQUIREMENTS 48
19 VERIFICATION AND VALIDATION PROCEDURES 48
19.1.1 Data Precision Assessment Procedures 49
19.1.2 Data Accuracy Assessment Procedures 49
19.1.3 Data Completeness Assessment Procedures 50
20 DATA USABILITY/REONCLILATION WITH PROJECT QUALITY OBJECTIVES50

TABLES

Table 1-1 Project Specific Practical Quantitation Limits
Table 1-2 Accuracy and Precision Data Quality Objectives
Table 1-3 Matrix Spike and Laboratory Control Sample Precision and Accuracy
Table 1-4 Crosswalk for Information Required for the QAPP Located in Other Documents

ATTACHMENTS

Attachment A Referenced QAPP Worksheets
Attachment B Dioxin/Furan Immuno Assay Test Kit Correlation Study

2.2 Document Control Format

The document control format is used to indicate the most current version of this QAPP. The format will be found in the upper right-hand corner of the QAPP starting with the Title and Approval Page and including the Table of Contents.

The document control format will consist of the abbreviated title of the project (CMRSS) followed by the abbreviation for this document (QAPP) on the first line. The second line will contain the revision number of this document (DRAFT. 01, 02, etc.). The third line will contain the date of the current revision. The final line will give the page number in relation to total number of pages. Each revision of this QAPP will be differentiated with a new revision number and date.

2.3 Document Control Numbering System

Due to the limited number of individuals receiving this document, a document control numbering system will not be instituted for this QAPP. In order to ensure the most recent document is in place, all individuals on the distribution list will be notified via telephone and e-mail as to any revision and/or addendum to this QAPP. In addition, an electronic copy of the revision/addendum will be sent as an attachment to the e-mail for reference until a hard copy is submitted.

2.4 EPA-NE QAPP Worksheet #2 - Rev. 10/99

Site Name/Project Name: Centredale Manor Restoration Superfund Site
Site Location: North Providence, RI
Site Number/Code: NA
Operable Unit: NA
Contractor Name: Loureiro Engineering Associates, Inc.
Contractor Number: NA
Contract Title:NA
Work Assignment Number: NA
Anticipated date of QAPP Implementation: NA

1. Identify Guidance used to prepare QAPP:

Region I, EPA-NE Compendium of Quality Assurance Project Plan Requirements and Guidance, Final October 1999, and

Attachment A, ***Region I, EPA New England Quality Assurance Project Plan Manual, Draft, September 1998***

2. Identify EPA Program: **EPA NE CERCLA NTCRA**

3. Identify approval entity: EPA-NE or State: **EPA**

or other entity:

4. Indicate whether the QAPP is a generic program QAPP or a project specific QAPP. (underline one)

5. List dates of scoping meetings that were held: *5/4/01, 5/11/01, 5/22/01, 6/21/01*

6. List title of QAPP documents and approval dates written for previous site work, if applicable:

Title	Approval Date
Quality Assurance Project Plan, The Centredale Manor Site (USEPA Contract 68-R1-98-01, Task Order 18, IT Corp, July 1999	***July 1999***
ERRS I Program Quality Assurance Project Plan, (USEPA Contract 68-R1-98-01, Task Order 18, IT Corp, April 1999.	***April 1999***

7. List organizational partners (stakeholders) and connection with EPA and/or State:

State of Rhode Island Department of Environmental Management (RIDEM)
United States Army Corps of Engineers (USACE)

8. List data users:

Loureiro Engineering Associates, Inc., EPA-NE, RIDEM, USACE

9. If any required QAPP Elements (1-20), Worksheets and/or Required Information are not applicable the project, then circle the omitted QAPP Elements, Worksheets and Required Information on the attached Table. Provide an explanation for their exclusion below:

Bold QAPP Elements, Worksheets and/or Required Information that are not applicable to the project and provide an explanation on EPA-NE QAPP Worksheet #2, Item 9.

REQUIRED EPA QA/R-5 QAPP ELEMENTS	REQUIRED EPA-NE QAPP ELEMENTS and CORRESPONDING EPA-NE QAPP SECTIONS	EPA-NE QAPP Worksheet #	REQUIRED INFORMATION
Project Management and Objectives			
A1	1.0 Title and Approval Page	1	- Title and Approval Page
A2	2.0 Table of Contents and Document Format 2.1 Table of Contents 2.2 Document Control Format 2.3 Document Control Numbering System 2.4 EPA-NE QAPP Worksheet #2	2	- Table of Contents - EPA-NE QAPP Worksheet
A3	3.0 Distribution List and Project Personnel Sign-off Sheet	3 4	- Distribution List - Project Personnel Sign-off Sheet
A4, A8	4.0 Project Organization 4.1 Project Organizational Chart 4.2 Communication Pathways 4.2.1 Modifications to Approved QAPP 4.3 Personnel Responsibilities and Qualifications 4.4 Special Training Requirements/ Certification	5a 5b 6 7	- Organizational Chart - Communication Pathways - Personnel Responsibilities and Qualifications Table - Special Personnel Training Requirements Table
A5	5.0 Project Planning/Project Definition 5.1 Project Planning Meetings 5.2 Problem Definition/Site History and Background	8a 8b	- Project Scoping Meeting Attendance Sheet with Agenda and other Project Planning Meeting Documentation - Problem Definition/Site History and Background - EPA-NE DQO Summary Form - Site Maps (historical and present)
A6	6.0 Project Description and Schedule 6.1 Project Overview 6.2 Project Schedule	9a 9b 9c 9d 10	- Project Description - Contaminants of Concern and Other Target Analytes Table - Field and Quality Control Sample Summary Table - Analytical Services Table - System Designs - Project Schedule Timeline Table
A7	7.0 Project Quality Objectives and Measurement Performance Criteria 7.1 Project Quality Objectives 7.2 Measurement Performance Criteria	11a 11b	- Project Quality Objectives/Decision Statements - Measurement Performance Criteria Table
Measurement/Data Acquisition			
B1	8.0 Sampling Process Design 8.1 Sampling Design Rationale	12a 12b	- Sampling Design and Rationale - Sampling Locations, Sampling and Analysis Method/SOP Requirements Table - Sample Location Map

REQUIRED EPA QA/R-5 QAPP ELEMENTS	REQUIRED EPA-NE QAPP ELEMENTS and CORRESPONDING EPA-NE QAPP SECTIONS	EPA-NE QAPP Worksheet #	REQUIRED INFORMATION
B2, B6, B7, B8	9.0 Sampling Procedures and Requirements 9.1 Sampling Procedures 9.2 Sampling SOP Modifications 9.3 Cleaning and Decontamination of Equipment/Sample Containers 9.4 Field Equipment Calibration 9.5 Field Equipment Maintenance, Testing and Inspection Requirements 9.6 Inspection and Acceptance Requirements for Supplies/Sample Containers	13 12b 14 15	- Sampling SOPs - Project Sampling SOP Reference Table - Sampling Container, Volumes and Preservation Table - Field Sampling Equipment Calibration Table - Cleaning and Decontamination SOPs - Field Equipment Maintenance, Testing and Inspection Table
B3	10.0 Sample Handling, Tracking and Custody Requirements 10.1 Sample Collection Documentation 10.1.1 Field Notes 10.1.2 Field Documentation Management System 10.2 Sample Handling and Tracking System 10.3 Sample Custody	16	- Sample Handling, Tracking and Custody SOPs - Sample Handling Flow Diagram - Sample Container Label (Sample Tag) - Chain-of-Custody Form and Seal
B4, B6, B7, B8	11.0 Field Analytical Method Requirements 11.1 Field Analytical Methods and SOPs 11.2 Field Analytical Method/SOP Modifications 11.3 Field Analytical Instrument Calibration 11.4 Field Analytical Instrument/ Equipment Maintenance, Testing and Inspection Requirements 11.5 Field Analytical Inspection and Acceptance Requirements for Supplies	17 18 19	- Field Analytical Methods/SOPs - Field Analytical Method/SOP Reference Table - Field Analytical Instrument Calibration Table - Field Analytical Instrument/Equipment Maintenance, Testing and Inspection Table
B4, B6, B7, B8	12.0 Fixed Laboratory Analytical Method Requirements 12.1 Fixed Laboratory Analytical Methods and SOPs 12.2 Fixed Laboratory Analytical Method/SOP Modifications 12.3 Fixed Laboratory Instrument Calibration 12.4 Fixed Laboratory Instrument/ Equipment Maintenance, Testing and Inspection Requirements 12.5 Fixed Laboratory Inspection and Acceptance Requirements for Supplies	20 21	- Fixed Laboratory Analytical Methods/SOPs - Fixed Laboratory Analytical Method/SOP Reference Table - Fixed Laboratory Instrument Maintenance and Calibration Table

REQUIRED EPA QA/R-5 QAPP ELEMENTS	REQUIRED EPA-NE QAPP ELEMENTS and CORRESPONDING EPA-NE QAPP SECTIONS	EPA-NE QAPP Worksheet #	REQUIRED INFORMATION
B5	13.0 Quality Control Requirements 13.1 Sampling Quality Control 13.2 Analytical Quality Control 13.2.1 Field Analytical QC 13.2.2 Fixed Laboratory QC	 22a 22b 23a 23b 24a 24b	**Sampling** - Field Sampling QC Table - Field Sampling QC Table cont. **Analytical** - Field Analytical QC Sample Table - Field Analytical QC Sample Table cont. - Field Screening/Confirmatory Analysis Decision Tree - Fixed Laboratory Analytical QC Sample Table - Fixed Laboratory Analytical QC Sample Table cont.
B9	14.0 Data Acquisition Requirements	25	- Non-Direct Measurements Criteria and Limitations Table
A9, B10	15.0 Documentation, Records and Data Management 15.1 Project Documentation and Records 15.2 Field Analysis Data Package Deliverables 15.3 Fixed Laboratory Data Package Deliverables 15.4 Data Reporting Formats 15.5 Data Handling and Management 15.6 Data Tracking and Control	26	- Project Documentation and Records Table - Data Management SOPs
ASSESSMENT/OVERSIGHT			
C1	16.0 Assessments and Response Actions 16.1 Planned Assessments 16.2 Assessment Findings and Corrective Action Responses 16.3 Additional QAPP Non-Conformances	27a 27b 27c	- Assessment and Response Actions - Project Assessment Table - Project Assessment Plan - Audit Checklists
C2	17.0 QA Management Reports	28	- QA Management Reports Table
Data Validation and Usability			
D1	18.0 Verification and Validation Requirements		- Validation Criteria Documents *
D2	19.0 Verification and Validation Procedures	29a 29b 29c	- Data Evaluation Process - Data Validation Summary Table - Data Validation Modifications
D3	20.0 Data Usability/Reconciliation with Project Quality Objectives	30	- Data Usability Assessment

* Include Data Validation Criteria Document as an attachment to the QAPP if Region I, EPA-NE Data Validation Functional Guidelines for Evaluating Environmental Analyses will not be used for validating project data.

Note: Required project-specific information should be provided in tabular format, as much as practicable. However, sufficient written discussion in text format should accompany these tables. Certain sections, by their nature, will require more written discussion than others. In particular, Section 8.0 should provide an in-depth explanation of the sampling design rationale and Sections 18-20 should describe the procedures and criteria that will be used to verify, validate and assess data usability.

3 DISTRIBUTION LIST AND PERSONNEL SIGN-OFF SHEET

A list of key project personnel who will received an approved QAPP, are found on Worksheet 3 found in Attachment A of this QAPP. These people will also receive any revisions, addenda, and/or amendment to this QAPP as they become necessary.

A project personnel sign-off sheet is included as QAPP Worksheet 4 in Attachment A. A copy of this form must be signed by the project personnel from each organization to indicate that they have read the QAPP and will implement the QAPP as prescribed. Each organization will keep the original signed sheets in their organizations project files and forward copies of the signed sheets to LEA to be placed in the project files

4 PROJECT ORGANIZATION

4.1 Project Task Organization

The Work Plan will require integration of personnel from the organizations identified below, referred to as the project team. An organization chart is included as QAPP Worksheet 5a in Attachment A. A detailed description of the responsibilities of each member of the project team is presented below.

4.2 Communication Pathways

The LEA Project Manager will be central for the majority of communications throughout work plan activities. All field sampling information and results of laboratory analysis will be reported to the LEA Project Manager. In addition, reporting to regulatory and/or approval agencies will be provided by the LEA project Manager. In the event that a real-time modification is necessary to this QAPP to ensure project goals are met, the project manager will co-ordinate with the appropriate regulatory agencies and project QA personnel to make the necessary changes.

4.3 Roles and Responsibilities

Loureiro Engineering Associates, Inc. (LEA), on behalf of Centredale Manor Performing Parties Group, has overall responsibility for the Implementation Work Plan (IWP) at the site. LEA will perform the additional investigation sampling, confirmatory soil/sediment sampling, disposal characterization sampling, and miscellaneous sampling described in the Field Sampling Plan (FSP) included as Appendix C in the IWP. In addition, LEA will be responsible for evaluating resultant sampling data and preparing required data submittals. Centredale Manor Performing Parties Group will provide project direction and oversight.

4.3.1 Centredale Manor Performing Parties Group

Centredale Manor Performing Parties Group Project Manager responsibilities and duties include:

Overall direction of the Work Plan;

- Direction of LEA;
- Review of LEA work products, including data, memoranda, letters, reports, and all documents transmitted to the USEPA, and RI DEM: and
- Assure corrective actions are taken for deficiencies cited during audits of sampling/analytical activities.

4.3.2 LEA

LEA's responsibilities and duties include:

- Oversight of remedial work activities and products; and
- Coordination with Centredale Manor Performing Parties Group, USEPA and RI DEM.

4.3.2.1 LEA Project Manager

Responsibilities include management and coordination of all aspects of the project as defined in the Work Plan with an emphasis

- on adhering to the objectives of the Work Plan; and
- Coordination of office and field activities with Centredale Manor Performing Parties Group.

4.3.2.2 LEA Task Manager

Task Manager (Project Engineer/Geologist/Scientist) will manage the ongoing sampling and analysis activities associated with the Work Plan. Responsibilities and duties of each Task Manager include:

- Manage day to day sampling activities;
- Develop, establish, and maintain files on sampling activities;
- Assure corrective actions are taken for deficiencies cited during audits of sampling activities;
- Overall QA/QC of the Work Plan activities;
- Review all field records and logs;
- Instruct personnel working on sampling activities;
- Coordinate field and laboratory schedules pertaining to sampling activities;
- Ensure, in coordination with the Quality Assurance Manager, the preparation of QA/QC samples, including performance evaluation samples;
- Request sample bottles from the laboratory;
- Review the field instrumentation, maintenance, and calibration to meet quality objectives;
- Prepare sections of reports pertaining to relevant Work Plan activities; and
- Maintain field and laboratory files of field forms and logs, data reductions, and calculations.

4.3.2.3 LEA Field Sampling Personnel

The field-sampling personnel's responsibilities and duties include:

- Prepare sample labels and field paperwork

- Perform field procedures associated with the collection of samples as set forth in the Field Sampling Plan (FSP);
- Perform field analyses and collect QA samples;
- Calibrate, operate, and maintain field instrumentation equipment;
- Reduce field data;
- Maintain sample custody; and
- Complete field records and logs and provide copies to the LEA Task Manager.

4.3.2.4 LEA Director of Quality (DQ)

The DQ's responsibilities and duties include:

- Review laboratory data packages;
- Coordinate field QA/QC activities with task managers, including audits of sampling activities, concentrating on field analytical measurements and practices to meet data quality objectives;
- Review audit reports; and
- Prepare interim QA/QC compliance reports.
- The QAM will be independent of the unit generating the data.

4.3.2.5 LEA Laboratory Director

The LEA Laboratory Director is responsible for the screening data generated by the in-house laboratory. These responsibilities include:

- Monitor work loads and ensure availability of resources;
- Oversee preparation of analytical reports;
- Ensure all screening method QC criteria are met: and
- Supervise in house chain-of-custody.

4.3.3 Severn Trent Laboratories, Inc

Severn Trent Laboratories, Inc. (STL) has been selected as the analytical laboratory for this project. STL-Sacramento will be performing dioxin analysis for the project. All other analytical data will be generated by the STL-Connecticut Laboratory. STL's general responsibilities and duties include:

- Perform sample analyses and associated laboratory QA/QC procedures;
- Supply sampling containers, shipping packages, and preservatives;
- Maintain laboratory custody of sample; and
- Strict adherence to all protocols in the QAPP.

4.3.3.1 Laboratory Project Manager

The Laboratory Project Manager's responsibilities and duties include:

- Serve as primary communication contact between LEA and the laboratory technical staff;
- Monitor work loads and ensure availability of resources;
- Oversee preparation of analytical reports;

- Provide data validation packages as requested, and
- Supervise in house chain-of-custody.

4.3.3.2 Laboratory Quality Assurance Manager

The Laboratory QAM's responsibilities and duties include:

- Supervise the group which reviews and inspects all project related laboratory activities; and
- Conduct audits of all laboratory activities.

4.3.3.3 Laboratory Sample Custodian

The Laboratory Sample Custodian's responsibilities and duties include:

- Receive all samples; and
- Maintain custody of the samples and all documentation.

4.3.3.4 Laboratory Data Reviewer

The Laboratory Data Reviewer's responsibilities and duties include verification of the final analytical data prior to transmittal to LEA.

4.4 Special Training Requirements/Certification

To comply with OSHA requirements, all LEA employees and subcontractors working on-site will have completed a 40-hour health and safety training course as mandated by 29 CFR § 1910.120 prior to beginning work on the Site. Supervisory personnel will also have completed an 8-hour supervisor training. All LEA employees and subcontractors that have completed the required training will be listed in QAPP Worksheet 7 in Attachment A of this QAPP as the personnel are determined. All training records/certificates will also attached to the above-mentioned worksheet.

All field team members will review the associated IWP, the FSP, the HASP and this QAPP included as Appendices A, C and D of the IWP, respectively and all applicable SOPs included as Appendix G of the ISW. In addition, a field orientation meeting will be held with the Project Manager, Task Manager, and the Health and Safety Manager prior to initiating the sampling event to familiarize field team members with the scope of the field activities.

Any personnel performing dioxin immunoassay screening analysis will be properly trained and that training documented. All LEA personnel that have completed the required training for dioxin immunoassay analysis are listed in QAPP Worksheet 7. All training records/certificates are attached to the above-mentioned worksheet.

Project team personnel are trained in the specific procedures to be followed during the execution of the work, including but not limited to: project QA/QC requirements, soil, sediment and surface water sampling, chain of custody and field document control, test and inspection methods, calibration, and in particular the general provisions of this QAPP and its supporting procedures and guidelines.

5 PROJECT PLANNING/PROBLEM DEFINITION

5.1 Project Planning Meetings

The initial LEA project design meeting was held on May 4, 2001. In attendance were Scott Miller, Joe Trzaski, Meredith Honan, Tracey Lengyel, and Jefferson Berdeen. During this meeting, projects elements were discussed and assignments for design document preparation were assigned. Progress meetings were held on May 11, May18, May 22, and June 21, 2001.

5.2 Problem Definition Background

The purpose of this work assignment is to conduct additional sampling in areas that may have been impacted by contamination released from the Site that was subsequently transported and deposited in adjacent and downstream areas by the waters of the Woonasquatucket River. The goal of the sampling is to identify the extent to which these releases and their subsequent transport and deposition have contaminated the sediments of Allendale Pond and Lymansville Pond and soils of adjacent riverbank and floodplain areas. The data generated by this work will be used to delineate the extent of impacted soils and sediment to be excavated and removed for off-site disposal.

In the 1930's, Centredale Worsted, a textile mill, was located on the property. In the early 1940's, Atlantic Chemical Company utilized a portion of the site to manufacture chemicals. In 1953, Atlantic Chemical Company changed its name to Metro-Atlantic, Inc. and operated until the late 1960's. Metro-Atlantic, Inc. changed its name to Crown-Metro, Inc. in the late 1960's and ceased operation in the early 1970's. New England Container Company also utilized a portion of the Site for barrel reclamation from 1952 to the early 1970's. . Sometime in the early 1970's, a major fire destroyed most of the structures on site. The remaining buildings were razed. The current buildings at the Site, Brook Village Apartments and Centredale Manor Apartments, were constructed in 1977 and 1982, respectively.

In October and November of 1977, the Rhode Island Department of Environmental Management (RIDEM) conducted several investigations at the property in response to complaints of fumes and odors. Approximately four hundred, 55-gallon drums were observed by RIDEM representatives on the property and in a swampy area near the Woonasquatucket River. From December 1979 to March 1981, RIDEM periodically inspected the property and in 1980, RI DEM observed and inventoried approximately six hundred 55-gallon drums scattered on the

property. In February 1982, prior to the construction of the apartment building, 300 to 400 drums were removed from the property containing various hazardous substances.

During the construction of the Centredale Manor Apartment complex, soil and drum removal activities were conducted under direct RIDEM supervision. Approximately 6,000 tons of soil and an unknown number of drums were shipped off-site for disposal. In addition, approximately 300 to 400 drums were removed from trash piles and from within the swamp adjacent to the apartment complex and disposed off-site. In March of 1996, a contractor for RIDEM conducted a ground penetrating radar (GPR) investigation to determine whether tanks or additional drums were buried on the Site. Three areas identified anomalies consistent with buried metal debris but did not conclusively identify anomalies associated with buried drums or tanks.

A study conducted in June 1996, by the EPA Narragansett Laboratories and the Providence Urban Initiative Program (EPA, 1996) determined that elevated levels of dioxin (TEQ) were present in fish tissue samples collected from the Woonasquatucket River. A subsequent study of the river conducted by the USEPA Office of Environmental Measurement and Evaluation (OEME) in June 1998, found elevated concentrations of dioxin (TEQ) and PCBs in sediments in portions of the river adjacent to, and downstream of, the Centredale Manor Site (EPA, July 1998).

Soil and sediment sampling conducted by EPA START personnel in September 1998 found dioxin present at a concentrations up to 10.1 ppb in sediments collected from the exposed bottom of the former Allendale Pond (Weston, March, 1999). Further sampling conducted in February 1999, and again July and August 1999, on the Centredale Manor property and adjacent wetlands found elevated concentrations of dioxin in soils and sediment.

In 1999, a series of Time-Critical Removal Actions were implemented that were proposed in the initial Action Memorandum for the Site. The Removal Actions included clearing and grubbing of approximately 6-acres of the Site, the collection of over six hundred samples, the installation of over a mile of cedar and chain-link fencing, and the installation of two interim measure soil caps over areas of significant dioxin contaminated soil and sediment.

Elevated levels of dioxin exist in the residential use soil and sediment in and around Allendale Pond, Lymansville Pond and the reach of the Woonasquatucket River that connect the two Ponds. Specifically, the single contaminant of concern (COC) is 2,3,7,8-tetrachlorodibenzo-p-dioxin (TCDD) as identified in the Action Memorandum for the NTCRA dated January 18, 2001. The objectives of the NTCRA as identified in the Action Memorandum are;

- To prevent the migration of TCDD contaminated sediments to downstream areas,
- To eliminate or reduce the risk of human exposure to flood plain sediments containing TCDD concentrations exceeding the removal action goal, and
- To eliminate or reduce the risk of human exposure to residential use soils containing concentrations of dioxin in excess of the removal action goal.

The removal action goal for the project has been determined to be 1.0 part per billion (ppb) of toxicity equivalent (TEQ) of 2,3,7,8-TCDD. Residential use soil and sediment containing greater than 1 ppb TEQ will require removal, except for sediment that will be covered with a minimum of 1 foot of water at the completion of reconstruction activities of the Allendale Dam. Reconstruction of the dam will also prevent further migration of sediment containing concentrations of TCDD beyond Allendale Pond.

Under this work assignment, field activities and environmental sampling will be conducted on soils and sediments associated with Allendale Pond and Lymansville Pond adjacent to and downstream of the Site. The purpose of this investigation is to determine the extent and distribution of dioxin in the river sediments located above the 92.5 contour interval, in soils located in frequently used riverbank areas, and in residential properties as described in the FSP. The data generated by this work will be used to delineate the extent of impacted soils and sediment to be excavated and removed for off-site disposal.

6 PROJECT/TASK DESCRIPTION AND SCHEDULE

6.1 Project Overview

The scope of work involves collection and analysis of sediment and soil samples from Allendale Pond and Lymansville Pond and the surrounding residential properties as described in the FSP. The Work Plan focuses on additional sampling of the areas described in the FSP as dioxin contaminated over 1 ppb TEQ in the Centredale Manor, Allendale Pond, and Lymansville Pond areas. Soil samples will be collected from residential properties located adjacent to the ponds and from portions of the banks of the river/pond that may by frequently used for recreational activities. Sediment samples will be collected from within the river/pond bottom adjacent to the shoreline. The data generated by this work will be used to delineate the extent of impacted soils and sediment to be excavated and removed for off-site disposal.

6.2 Project Schedule

A project schedule is included in Section 14 of the Implementation Work Plan.

7 PROJECT QUALITY OBJECTIVES AND CRITERIA FOR MEASUREMENT DATA

7.1 Project Quality Objectives

The current data set does not adequately define the extent of dioxin contamination in the soils and sediments in the project area. The following describes the data quality objectives for each of these areas.

7.1.1 Residential and Bank Soil Data Quality Objectives

Surficial soil samples from residential areas within the 10-year flood plain and from the frequently used pond/river bank areas will be collected for laboratory analysis. Data from analyses of these samples will be used to identify areas of dioxin contamination greater than 1 ppb TEQ to determine the limits of required excavation. Sample analyses for the soils from residential and frequently used riverbank areas will include dioxin analyses. Analysis of dioxin will be performed by the selected analytical laboratory according to SW-846 Method 8290A.

7.1.2 Sediment Sampling Data Quality Objectives

Sediment samples will be collected from a depth at or above the 92.5-foot contour level from the river bottom at locations adjacent to and downstream of the Site. Data from analysis of these samples will be used to delineate areas of dioxin contamination greater than 1 ppb TEQ to determine the limits of required excavation. The sediment samples will be analyzed for dioxin according to EPA method SW-846 8290A.

7.2 Measurement Performance Criteria

Quality assurance objectives are generally defined in terms of five parameters: precision, accuracy, representativeness, completeness, and comparability (PARCC). DQO development focuses on identifying the end use of the data to be collected and on determining the degree of certainty with respect to PARCC necessary to satisfy the intended use of the data. No data validation will be performed on sample results generated form delineation activities or off-site disposal characterization. To ensure that analytical data from samples collected for confirmation of excavation limits conforms to the specified criteria, a Tier III data validation will be performed in accordance with the EPA Functional Guidelines for Data Validation for these sample results. The analytical methods and field QA/QC samples for soil, sediment samples are summarized in Tables 3-1, 3-2, and 3-3 in the Field Sampling Plan (FSP) included as Appendix C of the Implementation Work Plan (IWP). Each of the objectives mentioned above are discussed below. Specific objectives for the FSP are set forth in other sections of this QAPP.

- Precision is a measure of the reproducibility of sample results. The goal is to maintain a level of analytical precision consistent with the objective of the FSP. To maximize precision, specific sampling and analytical procedures will be followed. All sampling and analysis work under this Work Plan will adhere to the established protocols presented in this QAPP and the FSP. Checks for analytical precision may include the analysis of matrix spike, matrix spike duplicates, laboratory duplicates and field duplicates. Checks for field measurement precision may include obtaining duplicate field measurements.

- Accuracy is a measure of how close a measured result is to the true value. Both field and analytical accuracy will be monitored through initial and continuing calibration of instruments. In addition, reference standards, matrix spikes, blank spikes, and surrogate standards may be used to assess the accuracy of the analytical data.

- Representativeness is the degree to which sampling data accurately and precisely represents site conditions, and is dependent on sampling and the variability of environmental media at the site. The sampling program has been designed to assess the presence of the chemical constituents at the time of sampling. The FSP presents the rationale for sample quantities and location. The FSP and this QAPP presents field sampling methodologies and laboratory analytical methodologies, respectively.

- Completeness is defined as a measure of the amount of valid data obtained from an event compared to the total amount that was obtained. This will be determined upon final assessment of the analytical results, as discussed in Section 19.1.3 (Data Completeness Assessment Procedures) of this QAPP.

- Comparability is the degree of confidence with which one data set can be compared to another. At a minimum, comparability involves the use of similar reporting units for similar matrices. Unless otherwise specified, all data must be calculated and reported in units consistent with similar environmental data (e.g., µg/L or mg/L for aqueous samples, and µg/kg or mg/kg for solid matrices). For dioxin/furan analysis, the units will be pg/L for aqueous samples and pg/g for solid samples. The laboratory will determine the percent solids and report the results on a dry weight basis.

In order to obtain data necessary to meet the objectives previously stated, the following categories of field sampling will be conducted as part of the Work Plan:

- Delineation samples of residential/recreational soils in the 10-year floodplain and sediments above 92.5 elevation to determine the extent of dioxin contamination in excess of 1 ppb TEQ;
- Post-excavation confirmatory soil/sediment samples to confirm the successful implementation of the Work Plan and document residual contamination concentrations;
- Soil/sediment disposal characterization samples for assessment of disposal options; and
- Miscellaneous material samples for the assessment of disposal options (e.g., demolition debris) associated with the IWP.

Preliminary Data Quality Objectives (DQOs) were identified to ensure that the data generated during field sampling will be of adequate quality and sufficient quantity to form a sound basis for decision making purposes relative to the above objectives. DQOs have been specified for each data collection activity.

DQO summaries for the Work Plan activities are presented in the following section. The summary consists of stated DQOs relative to the following items:

- Data Uses;

- Data Types;
- Data Quality;
- Data Quantity;
- Sampling and Analytical Methods; and
- Data PARCC Parameters.

The categories of analytical data discussed in the following sections with regard to data quality are defined as follows:

7.2.1 Delineation Sampling

This includes all data obtained to determine the extent of dioxin contamination greater than 1 ppb TEQ in each of the areas described in the FSP. These data will be generated by an immunoassay screening method (in accordance with SW-846 Method 4025 – proposed). A Standard Operating Procedure for the immunoassay screening method is included in Appendix G of the IWP. These data will be entered in the site-specific database. No data validation will be performed.

A correlation study was performed using the Cape Technologies Dioxin Immunoassay field kits on May 15 through May 23, 2000 in the NERL Mobile Laboratory on a set of dioxin laden soils/sediments from the Centredale Manor site in Providence, Rhode Island. A copy of this correlation study is included in Attachment B. Training was provided to several LEA employees by Bob Harrison of Cape Technologies on July 18–19, 2001. Three LEA employees attended the training. Training certificates have been attached to Worksheet 7 in Attachment A of this QAPP.

7.2.1.1 Data Uses

Soil/sediment sampling will be conducted to define the extent of dioxin contamination present at concentrations greater than 1 ppb TEQ in the areas of concern in order to more accurately define the areas presently identified by EPA as requiring remedial action (excavation).

7.2.1.2 Data Types

Delineation soil/sediment sampling will include the collection and analysis of samples for dioxin. Table 1-1 of the FSP presents the proposed sampling locations and the anticipated number of soil/sediment samples to be collected, respectively. Visual observation and screening of soil/sediment samples using dioxin immunoassay test kits will be conducted on these samples. No soil/sediment samples will be submitted for fixed-laboratory analysis.

7.2.1.3 Data Quality

Screening of soil/sediment samples will be performed using dioxin immunoassay test kits in accordance with the Standard Operating Procedure (SOP) provided in Appendix G of the IWP.

7.2.1.4 Data Quantity

The location, number and type of analysis of delineation soil/sediment samples to be analyzed from the excavation area will be determined based on a 10-foot grid as discussed in the FSP. Sampling will continue as necessary to determine the extent of the contamination and delineate the contaminated area(s) based on results of the immunoassay screening data. The samples collected will be screened for dioxin.

7.2.1.5 Sampling and Analysis Methods

The FSP contains a description of the soil/sediment sampling procedures to be employed during the additional investigation. All analysis in this phase of the Work Plan will be by immunoassay screening methods.

7.2.1.6 Precision and Accuracy Quality Control Limits (PARCC) Parameters

Precision and accuracy quality control limits for chemical constituents that are used during data review to assess analytical performance are described in the SOP for Dioxin Immunoassay included in Appendix G of the IWP. Data representativeness is addressed by comparing the sample quantities and/or locations identified in the FSP to the sample quantities and/or locations actually collected during sampling activities. Data comparability will be addressed during data verification by ensuring analytical methods used and data reporting are performed in a consistent manner. Data completeness will be assessed at the conclusion of the sampling activities by comparing the number of valid results generated to the total number of results generated.

7.2.2 Post-Excavation Confirmatory Soil/Sediment Sampling

The data will be reviewed for accuracy and data verification will be performed. These data will be generated by STL, a USACE validated laboratory using EPA-approved analytical methods. Tier III validation will be performed on the confirmatory data obtained in accordance with EPA Region I data validation guidelines, or where appropriate, EPA data validation standard operating procedures specific to dioxin. These data will also be entered in the site-specific database.

7.2.2.1 Data Uses

Post-excavation confirmatory soil/sediment sampling will be conducted to confirm that residual concentrations of dioxin present at the limits of the excavated areas are below the Work Plan objectives.

7.2.2.2 Data Types

Confirmatory soil/sediment sampling will include the collection and analysis of samples for dioxin. Table 3-1 of the FSP presents the anticipated number of confirmatory soil/sediment samples to be collected and the laboratory analysis to be performed. Visual observation and screening of soil/sediment samples using dioxin immunoassay field test kits will also be conducted prior to the submission of soil/sediment samples for laboratory analysis.

7.2.2.3 Data Quality

Fixed-laboratory analysis for dioxin will be conducted in accordance with the USEPA SW-846 Method 8290A. The results of the fixed laboratory analysis will be presented in accordance with USEPA Region I, Tier III data deliverables package and final electronic deliverables. QA/QC samples will be performed for the confirmatory soil/sediment samples collected. Minimal QA/QC samples will be performed for the dioxin screening analyses by immunoassay methodology. The number and type of QA/QC samples associated with confirmatory soil/sediment samples are summarized in Field Sampling Plan Table 3-3.

7.2.2.4 Data Quantity

The location, number and type of analysis of post-excavation confirmatory soil/sediment samples to be analyzed from the excavation area will be determined as discussed in section 3.3 of the FSP. The samples collected will be analyzed for dioxin by EPA SW-846 Method 8290A.

7.2.2.5 Sampling and Analysis Methods

The Field Sampling Plan contains a description of the post-excavation confirmatory sampling procedures to be employed during the Work Plan activities. The project-specific laboratory analytical methods and reporting limits are listed in Table 1-1 of this QAPP.

7.2.2.6 Precision and Accuracy Quality Control Limits (PARCC) Parameters

Precision and accuracy quality control limits for chemical constituents that are used during data review to assess analytical performance, are included in Tables 1-2 and 1-3. Data representativeness is addressed by comparing the sample quantities and/or locations identified in the FSP to the sample quantities and/or locations actually collected during sampling activities. Data comparability will be addressed during data verification by ensuring analytical methods used and data reporting are performed in a consistent manner. Data completeness will be assessed at the conclusion of the sampling activities by comparing the number of valid results generated to the total number of results generated.

7.3 Disposal Characterization Sampling

This includes all data generated from the characterization of contaminated soil/sediment, demolition debris and soil/sediment dewatering wastewater sampling as applicable. These data will be generated by STL, a USACE validated laboratory using EPA-approved analytical methods. The data will be reviewed for accuracy and data verification will be performed. These data will also be entered in the site-specific database. No data validation will be performed.

7.3.1 Data Uses

Disposal characterization sampling will be conducted to determine handling requirements for soil/sediment excavated during the NTCRA. In addition, any debris and wastewater from soil/sediment dewatering activities will be samples for characterization prior to disposal.

7.3.2 Data Type

The disposal characterization sampling will include a subset of the samples collected for additional investigation phase and the collection of soil/sediment samples from selected areas associated with elevated dioxin concentrations sampled in previous investigations. The samples will be submitted for laboratory analysis for VOCs, SVOCs, PCBs, metals, dioxin, and other requirements as specified by the disposal facility.

7.3.3 Data Quality

Samples will be submitted for laboratory analysis for PCBs, metals, VOCs, SVOCs, dioxin, and other analytes as required by disposal vendors using EPA-approved methods. The results will be presented using a standard laboratory report format and final electronic deliverables. Screening of soil/sediment samples may be performed using immunoassay test kits in accordance with SOPs included in Appendix G of the IWP.

7.3.4 Data Quantity

The disposal characterization samples will be a subset of the additional investigation samples listed above, in addition to representative samples collected in areas where previous data have been obtained. The following table describes the amount of sampling required for disposal:

No. of Samples	Volume of soil		No. of Samples	Volume of soil		No. of Samples	Volume of soil	
	(m^3)	(yd^3)		(m^3)	(yd^3)		(m^3)	(yd^3)
1	30	40	7	500	655	13	1250	1640
2	60	80	8	600	790	14	1500	1970
3	100	130	9	700	920	15	1750	2290
4	200	260	10	800	1050	16	2000	2620
5	300	390	11	900	1180	16+1 per additional 500m^3 >2,000 m^3		
6	400	520	12	1000	1310	16+1 per additional 655 yd^3 >2620 yd^3		

QA/QC disposal characterization samples will not be submitted for laboratory analysis.

7.3.5 Sampling and Analytical Methods

The Field Sampling Plan presents a description of the disposal characterization soil/sediment sampling procedures to be employed during the Work Plan. Samples will be submitted for laboratory analysis for PCBs, VOCs, SVOCs, metals, dioxin, and other analytes as required by disposal vendors using EPA-approved methods. The laboratory methods to be utilized are presented on Table 3-1 and 3-2 of the FSP.

7.3.6 Precision and Accuracy Quality Control Limits (PARCC) Parameters

Precision and accuracy quality control limits for chemical constituents analyzed, as part of the characterization sampling will not undergo data review. Data representativeness is addressed by comparing the sample quantities and/or locations identified in the FSP to the sample quantities and/or locations actually collected during sampling activities. Data comparability will be addressed during data verification by ensuring analytical methods used and data reporting are performed in a consistent manner. Data completeness will be assessed at the conclusion of the sampling activities by comparing the number of valid results generated to the total number of results generated.

MEASUREMENT/DATA ACQUISITION

This section describes the sampling design selected to achieve the objectives of the investigation. The sampling methods, handling, analytical requirements, methods, and QA/QC requirements are discussed. In addition, information about the instrumentation type, maintenance, calibration, and data management is also described.

8 SAMPLING PROCESS DESIGN

Soil and sediment sampling activities will be carried out at the Site to define the limits of the excavations in the twelve action areas identified in the Engineering Evaluation/Cost Analysis (TtNUS, 2000). This information will be used to designate the dimensions of the excavations in each of the action areas. Post excavation confirmatory sampling will also be performed to confirm that all dioxin-contaminated soil has been removed from each of the action areas.

All samples to be collected during the excavation delineation sampling event and post excavation confirmatory samples are considered to be critical measurements.

8.1 Rationale for the Design

The twelve action areas were based on the areas designated in the EE/CA by TtNUS. Each area was selected by TtNUS based on sample locations that exhibited concentrations of dioxin that exceeded 1 ppb. The action areas were also based on the use of the soil and sediment (residential use soil and sediment). The sampling methodology and rationale described in the FSP was based on the locations of the "hot" sample locations from previous sampling events. In each action area, grid based sampling for the excavation delineation sampling event in a ten-foot grid is proposed around each of the "hot" samples. The confirmatory sampling described in the FSP involves the sampling of sidewalls at 30-foot intervals, and bottoms of excavations in 30 square-foot areas. The sampling methodologies and procedures are discussed in detail in the FSP (Appendix C of the Implementation Work Plan).

The number of samples anticipated to be collected in each of the twelve action areas in the delineation phase of sampling is listed is in Table 1-1 of the FSP. Dioxin concentrations found in the action areas are also listed in Table 1-1 of the FSP.

8.1.1 Procedures for Locating and Selecting Environmental Samples

The sample locations for the excavation delineation sampling event are presented in Figures 1-1 through 1-12 of the FSP. The number of samples to be collected in each area is provided in Table 1-1 of the FSP. The "hot" samples in each of the action areas will be located by the survey Subcontractor prior to marking out each of the sampling grids. Based on the topography of each area, the LEA field scientist will need to change some of the sample locations in the sampling grid. Confirmatory sample locations will be based on the dimensions of the excavations in each individual action area.

9 SAMPLING PROCEDURES AND REQUIREMENTS

This section describes the procedures and equipment used in sample collection, sample preservation requirements, and management of investigation derived waste. In the occurrence of problems during sampling activities, the Task Manager will be responsible for any corrective actions taken.

9.1 Sampling Procedure

Samples will be will be collected from several matrices during implementation of the Work Plan. The matrices include soil and sediment, with the potential for the collection of demolition debris and soil dewatering wastewater as well.

Equipment and procedures for sampling for these matrices can be found in the SOPs included in Appendix G of the IWP:

- 10003: Hand Auger Borings
- 10004: Liquid sample Collection and Field Analysis
- 10005: QA/QC Measures for Field Activities
- 10006: Soil Sampling
- 10009: Sediment Sampling in Shallow Rivers and Ponds
- 10027: Liquid and Sludge Sampling from Drums, tanks, & Pits
- 10052: Analysis of Dioxins in Soil Samples using Immunoassay Test Kits

9.1.1 Sample Containers, Preservation and Holding Times

The following section describes the sample containers, preservation protocols, and holding times required for all sampling activities performed at the site.

9.1.1.1 Sample containers

Sample containers will be supplied to LEA by the selected analytical laboratory and will be in the possession of field personnel prior to commencement of sampling activities. The sample containers will be filled to near capacity during sample collection. In the event sampling for VOCs is required, the sample will be collected according to analytical method requirements. Container types for each matrix are specified in Table 3-4 of the FSP.

9.1.1.2 Sample Preservation

All samples will be stored in ice-packed coolers immediately after sampling. A cooler temperature blank will be prepared for each cooler every sampling event. The acceptable range for the cooler temperature is 2-6º C. Sample temperature will be noted on the chain-of–custody form upon receipt from the selected analytical laboratory. If the cooler temperature is outside the acceptable limit upon receipt by the laboratory, the deviation will be noted and the Laboratory Project Manager will immediately contact the site Task Manager. Analyte-specific preservation requirements are described in Table 3-4 of the FSP.

9.1.1.3 Sample Holding Times

Holding times are described in Table 3-4 of the FSP.

9.2 Sampling SOP Modifications

No sampling SOPs have been modified for any site-specific sampling activities. If any deviations from sampling SOPs are necessary due to site conditions, the LEA Project Manager will be notified prior to sampling activities. Any deviations from the SOPs will be recorded in the field paperwork and placed in the project notebook.

9.3 Cleaning and Decontamination of Equipment/Sample Containers

All non-disposable sampling and testing equipment that comes in contact with the sample medium (trowels, bowls, shovels, etc.) will be decontaminated to prevent cross-contamination between sampling points, as described below:

- Brush to remove gross contamination,
- Potable water and detergent (Alconox or Liquinox) wash and scrub with brush,
- Rinse with potable water,
- Rinse with DIUF water (analyte free),
- Rinse with 2-propanol,
- Rinse with hexane,
- Air dry (to the extent practical) on aluminum foil or in a strainer
- Wrap in aluminum foil for transport (or if not being used immediately).

All sample containers shall be obtained pre-cleaned from the analytical laboratory

9.4 Field Equipment Calibration

The equipment used for data collection, laboratory analysis, and health and safety monitoring is calibrated and maintained following the specific equipment manufacturers instructions.

On-site monitoring during excavation activities will be monitored using a portable organic vapor meter (Photoionization detector) and a real-time aerosol monitor (DataRAM). These instruments will be calibrated at the beginning of each day prior to excavation activities and end of each sampling day. Calibration specifications are listed in section 5.4 of the Site Specific Health and Safety Plan included as Appendix A of the IWP. The calibration will be recorded in the Daily Field Records

9.5 Field Equipment Maintenance

Each piece of equipment used for data collection, laboratory analysis, and health and safety monitoring is maintained following the specific equipment manufacturers instructions. If damaged or failed parts are identified during the daily maintenance check and it is determined that the damage could have an impact on the instruments performance, the instrument will be removed from service until the identified parts are repaired or replaced.

9.6 Inspection and Acceptance Requirements for Supplies / Sample Containers

STL will provide and be responsible for inspecting all laboratory supplies and consumables (reagents, preservatives, etc). The laboratory will ensure that the supplies and consumables are acceptable for use. The laboratory will provide the appropriate sampling containers with the proper preservative, if necessary.

10 SAMPLE HANDLING, TRACKING AND CUSTODY REQUIREMENTS

10.1 Sample Collection Documentation

10.1.1 Field Notes

All field notes will be recorded on field data collection forms. The following information will be included on the field forms:

- Site Name and location;
- Project commission number;
- Names, job functions, and organizational affiliations of personnel on site;
- Dates (month/day/year) and times (military)of all entries made on forms and user signatures;
- Description of all site activities, including entry and exit times;
- Weather conditions, including temperature and relative humidity
- Site observations;
- Identification and description of sample morphology and collection locations;
- Sample collection information, including dates (month/day/year)and times (military) of sample collections, sample collection methods and devices, sample collection heights/depths, sample preservation information, analyses requested, as well as chain of custody information such as sample location, identification numbers cross-referenced to field sample numbers;
- Contractor and sub-contractor information (address, name of personnel, job functions, organizational affiliations);
- Records of photographs taken (if any);
- Site sketches and diagrams made on site (if any)

A general soil description will be performed by the LEA field scientist following LEA SOP #10015, and will be recorded on a geologic boring log. Information in the description will include drilling/sampling methods and soil descriptors such as color, odor, and grain size.

10.1.2 Field Documentation Management System

All field paperwork will be submitted to the LEA Data Manager on a daily basis. Each data set received hardcopy format will be entered into the database by the Database Manager. After entry into the database, all data will be verified by designated technical personnel against the field forms, and any corrections necessary submitted to the Database Manager. Upon verification of the data set, the designated technical personnel will initial and date the paperwork, and submit to the Project Manager for placement in the central file.

10.2 Sample Handling and Tracking System

10.2.1 Sample Numbering

Each sample collected will be assigned a unique sample location designation. This is done to eliminate sample mix-up, cross-reference field and laboratory information, and help to avoid analyst bias by keeping the sample identity unknown to the analyst. The sample numbers will be noted in indelible ink on the label, field paperwork, and chain-of-custody form.

The sample location identification system is described in the IWP in section 5.2. The unique sample will be associated with each sample location identifier. These numbers will be standardized to fit database fields and to allow for simplified data queries and searches.

10.2.2 Sample Labels

At the time of collection, each sample will be labeled. The label will include the sample number, date of sampling, and time of sampling.

10.2.3 Sample Packaging

Samples returning to LEA's facility will be delivered via courier. The samples will be packaged in ice in a manner to prevent breakage. Responsibility for proper packaging will rest with of the Task Manager or his designee.

Samples shipped to the selected analytical laboratory will be packaged and labeled in compliance with current and applicable U.S. Department of Transportation (DOT) regulations. Any additional information required by the overnight carrier will be provided.

Each sample will be placed in a self-sealing bubble wrap bag after being tightly sealed and wiped clean. VOA vials, if necessary will be packaged in a similar manner to prevent breakage. Samples designated for overnight shipment will be placed in a metal or plastic cooler lined with two 6-mil thick plastic bags. A temperature blank will be included with the samples in order to determine cooler temperature upon receipt by the laboratory.

Once the samples are properly packaged, the inner bag is sealed by twisting the top and securely taping the bag shut. Ice will then be placed between the inner and outer bags. The outer bag is then taped and sealed closed.

Chain-of-custody forms will be will be enclosed in a watertight self sealing plastic bag taped to the underside of the cooler lid. The cooler is then sealed with custody seals and strapping tape. The laboratory address is placed on the outer lid of the cooler using the appropriate overnight carrier documentation.

10.3 Sample Custody

Chain-of custody will be maintained for all samples collected at the site. Strict adherence to chain-of-custody protocols, including sample identification, custody seals, chain-of-custody forms, personal custody, and transfer of custody.

A sample is considered to be in an individual's custody if the sample is

- In the physical possession of the responsible party;
- Secured to prevent tampering, and
- Placed in a restricted area by the responsible party

Chain-of-custody forms will be used to document sample custody from the field to the laboratory. The chain-of-custody form must be filled out completely and accurately to document samples collected in the field and ensure proper laboratory analyses. The chains-of-custody forms, as shown in Figure 3-1a (LEA COC) and Figure 3-1b (STL COC) of the FSP must include the following information:

- Project name and commission number;
- Site name;
- Sample number
- Sample type or matrix;
- Collection date and time;
- Number of containers for each sample
- Analysis required, including appropriate method reference;
- Remarks/comments;
- Signature of sampler.

The chain-of-custody form will have the date and time recorded, and be signed by the Task Manager or his designee upon completion of the form and confirmation that the information on the form is complete and accurate. Any changes to the form will be initialed by the individual making the changes. The chain-of-custody will terminate upon receipt by the laboratory. A copy of the form will be retained in the project files

10.3.1.1 Sample Transfer and Shipment

When possession of the samples is transferred, the individual relinquishing the samples and the individual receiving the samples will sign the chain-of-custody form and record the date and time on the appropriate place on the form. This record represents the official document for all transfers of the sample custody.

All samples to be screened by immunoassay will be shipped via LEA-provided courier to LEA's facility at 100 Northwest Drive in Plainville, Connecticut. The samples will then be relinquished to the LEA's sample refrigerator until immunoassay screening commences.

All samples designated for delivery to the selected analytical laboratory will be shipped via overnight delivery. The samples will be shipped according to DOT labeling and packaging requirements. Any additional information requested by the overnight delivery facility will be provided.

Location of immunoassay screening	Loureiro Engineering Associates, Inc. 100 Northwest Drive Plainville, CT 06062 860-747-6181
Location of fixed lab dioxin analysis:	Severn Trent Laboratories - Sacramento 880 Riverside Parkway West Sacramento, CA 95606 916-373-5600
Location of fixed lab all parameters: except dioxins	Severn Trent Laboratories – Connecticut 128 Long Hill Cross Road Shelton, CT 06484 203-929-8140

Any missing samples, missing labels, broken sample bottles, and improperly preserved samples will be noted on the chain-of custody form. Any damage to the custody seal prior to laboratory receipt will be noted on the chain-of-custody form. In case of any of the above problems, the laboratory sample custodian will notify the Laboratory Project Manager. The Laboratory Project Manager will then contact the LEA Project Manager to determine a viable solution to the problem.

Upon receipt by the laboratory, the samples will be logged into the Laboratory Information Management System (LIMS). The following information will be documented in the LIMS:

- Data and time of sample receipt;
- Project Name and Commission number;
- Field sample number;
- Laboratory sample number (assigned at log-in);
- Sample matrix;
- Analytical parameters;
- Storage location;
- Log-in person's initials.

All information regarding the samples will be secured at the end of each business day. All samples will be stored in a designated storage refrigerator.

10.3.2 Sample Log Sheets

The field team will complete sample log sheets for the soil, sediment, and aqueous samples collected. The sample log sheets contain information about sample location, date, and time of the sample collection, as well as a sample description, analysis, and sample containers.

10.3.3 Packing List/Chain-Of-Custody Record and Custody Seal

The original packing list/chain-of-custody (COC) record will be completed by the Task Manager (or designee). The completed COC will be enclosed in plastic and secured to the inside lid of the sample cooler prior to shipment to the laboratory. If multiple coolers are required to ship a single set of samples, the chain-of-custody form will be included in the cooler labeled "cooler #1 of X". A copy of the chain of custody form is retained for the project files. Shipping coolers are sealed with tape and two signed and dated custody seals are placed across the cooler opening. Copies of these chain-of-custody forms and the custody seals are presented as Figures 3-1 through 3-4 in the FSP.

The laboratory custodian receiving the samples signs and dates the chain-of-custody records to acknowledge receipt of the samples. The laboratory is then responsible for maintaining sample custody records and returning the original chain-of-custody form with the data analysis results.

11 SCREENING LABORATORY METHOD REQUIREMENTS

This section applies to the dioxin screening analysis that will be performed at the LEA facility during the delineation and confirmatory sampling phases of the Work Plan.

11.1 Field Analytical/Screening Laboratory Methods and SOPs

The LEA Analytical Laboratory will be performing will be performing dioxin immunoassay screening under LEA SOP 10052: Analysis of Dioxins in Soil Samples using Immunoassay Test Kits. This SOP can be found in Appendix G of the IWP.

11.2 Field Analytical/Screening Laboratory Method/SOP Modifications

11.2.1 Field Modification Record

Changes in field operating procedures may be necessary because of changed field conditions or unanticipated events. A summary of the sequence of events associated with field changes is as follows:

1. If a substantial change is required, the LEA Task Manager or designee notifies the LEA Project Manager of the need for the change.

2. If necessary, the LEA Project Manager will discuss the change with pertinent individuals, e.g., the EPA Remedial Project Manager (RPM), and will provide verbal approval or denial to the LEA Task Manager for the proposed change.

3. The LEA Task Manager will document the change on a Field Modification Record (FMR) form and forward the form to the LEA Project Manager at the earliest convenient time.

4. The Project Manager will sign the form and distribute copies to the LEA Program Manager, Quality Assurance Officer, LEA Task Manager, and the project file.

A copy of the completed FMR form will also be attached to the field copy of any affected documents, i.e., Sampling and Analysis Plan.

Custody of samples will be maintained at all times and documented in the chain-of-custody forms (Figure 3-1 of the FSP). Chain of custody begins at the time the sample is collected and is maintained by storing the samples on ice in coolers that are locked or are sealed with a custody seal. The chain-of-custody forms are shipped to the laboratory with the samples. Each sample collected will be labeled and assigned a unique sampling tracking number. Examples of chain-of-custody forms, sample labels, and custody seals are provided in Figures 3-1, 3-2, and 3-3 of the FSP, respectively.

11.2.2 Screening Laboratory SOP Modifications

Any modification to the immunoassay SOP will be submitted to LEA Project Manager, LEA DQ, the EPA WAM and QA officer for the project prior to implementation to ascertain any impact the modification may have on the quality of the analytical data. The proposed modification must be approved by the EPA WAM prior to implementation.

11.3 Field Analytical/Screening Laboratory Instrument Calibration

All field instrumentation will be calibrated daily prior to use according to the manufacturer's instructions. A record of the calibration checks will be recorded on the appropriate daily field form.

LEA Analytical Laboratory will perform instrument calibration as required by SOP 10052 as found in Appendix G of the IWP. A record of the calibration checks will be submitted in each data package submitted by the laboratory.

11.4 Field Analytical/Screening Laboratory Instrument/Equipment Maintenance, Testing, and Inspection Requirements

A preventative maintenance scheduled as recommended by the manufacturer will be in place for each analytical instrument. Instrument maintenance logbooks will be kept with each instrument and updated as maintenance procedures are performed.

11.5 Field Analytical/Screening Laboratory Inspection and Acceptance Requirements for Supplies

11.5.1 Field Supplies and Consumables

Supplies and consumables will meet the requirements of the specific task. The LEA Equipment Manager and the Task Manager perform the inspection of consumables and supplies for use in the project. All supplies and sample containers will have no visible damage or defects prior to accepting delivery of these items.

11.5.2 Laboratory Supplies and Consumables

Laboratory supplies and consumables will meet the requirements of the specific task. The LEA Laboratory Manager or designee will perform the inspection of consumables and supplies for use in the project. All supplies and sample containers will have no visible damage or defects prior to accepting delivery of these items.

12 FIXED LABORATORY ANALYTICAL METHOD REQUIREMENTS

12.1 Fixed Laboratory Methods and SOPs

A list of potential constituents of concern, along with the appropriate analytical methods and extraction methods (if any) are listed in Table 3-1 and 3-2 in the FSP. The laboratory shall document and report the performance of each analytical method used in conjunction with the samples being analyzed. This documentation will include raw data for all field samples analyzed as well as QC samples associated with the sample batch.

Any laboratory performing analyses will be required to review and validate its own results prior to reporting. Whenever a result falls out of method or laboratory performance criteria, the laboratory will be required to investigate the cause and take corrective action. The corrective action may include, but is not limited to:

- Reanalysis of standards;
- Adjustment of instrument operating conditions, followed by reanalysis of standards; or
- Reanalysis of all samples associated with out of control operations.

The goal of the corrective action is to provide the best quality results. All corrective actions will be documented by the analyst and confirmed in writing by the appropriate level of management in the case narrative. All quality problems will be brought to the attention of the LEA Project Manager in a timely fashion. This may be done by telephone provided it is followed up in writing.

12.2 Fixed Laboratory Method/SOP Modifications

Any modification to the analytical method/SOP will be submitted to LEA and the EPA WAM and QA officer for the project prior to implementation to ascertain any impact the modification may have on the quality of the analytical data. The proposed modification must be approved by the EPA WAM prior to implementation.

12.3 Fixed Laboratory Instrument Calibration

STL will perform instrument calibration as required by methods listed in Table 3-1 and 3-2 of the FSP. A record of the initial calibration and the continuing calibration checks will be submitted in each data package submitted by the laboratory.

12.4 Fixed Laboratory Instrument/Instrument Equipment, Maintenance, Testing, and Inspection requirements

The laboratory will develop a preventative maintenance scheduled as recommended by the manufacturer for each analytical instrument. Instrument maintenance logbooks will be kept with each instrument and updated as maintenance procedures are performed. All instruments will undergo all QC checks required by the analytical method (tuning, calibration, etc.) prior to any sample analysis.

12.5 Fixed Laboratory Inspection and Acceptance Requirements for Supplies

Supplies and consumables will meet the requirements of the specific task. The STL Laboratory Manager or designee will perform the inspection of consumables and supplies for use in the project. All supplies will have no visible damage or defects prior to accepting delivery of these items.

13 QUALITY CONTROL REQUIREMENTS

The quality control procedures refer to both field and laboratory control operations. The results from analysis of field and laboratory QC samples are used to document data quality and to control the data acceptance within previously established check limits in order to meet the DQO requirements for the project.

Quality control criteria include requirements for field and laboratory activities. This section describes the data quality indicators.

13.1 Sampling Quality Control

In addition to periodic calibration of field equipment and appropriate documentation, quality control samples will be collected or generated during sampling activities. Quality control samples include field duplicates and blanks. Each type of field quality control sample is defined below.

13.1.1 Rinsate Blank

Rinsate (equipment) blanks are obtained under representative field conditions by running analyte-free deionized water through sample collection equipment after decontamination and placing it in the appropriate sample containers for analysis. Sample preservatives must be added to the rinsate blanks. These samples are used to assess the

effectiveness of decontamination procedures. Rinsate blanks are required at a rate of one in twenty samples, per matrix, or one per sampling event if fewer than twenty samples are collected.

13.1.2 Field Duplicates

Field duplicates will be submitted at the rate of one for every twenty samples, per matrix. Field duplicates are collected as collocated samples. The soil samples will be thoroughly mixed and homogenized and transferred to the appropriate sample containers. If standing water is noted on the soil sample, the LEA field technician will attempt to dry the sediment by placing soils on an absorbent pad to wick away water from the sample. The field technician will also attempt to prevent larger grained particles (gravel and cobbles) from being included in the sample to promote homogeneity. Following dewatering the sample, the soil samples will be placed directly into two Teflon®-lined, 4-ounce glass jars. Soil samples will then be placed into sample coolers. Field duplicates provide precision information regarding homogeneity and distribution of the contaminants; they measure the bias of sub-sampling.

13.1.3 Trip Blanks

Trip blanks will be collected at a frequency of one per day in which the collection of VOCs is performed. Trip blanks will be prepared by the laboratory at the time sample containers are provided to the site. The trip blank will accompany the samples through sample collection and transportation. The trip blank will not be opened at the site, as it serves to assess sample conditions related to sample transport, shipping, or site conditions.

13.1.4 Temperature Blanks

Temperature blanks will be included in each cooler of samples shipped. The laboratory will use the temperature blank to determine the internal temperature of each cooler upon receipt. The laboratory will record the temperature of each cooler and notify the LEA Project Manager in the event that the cooler temperature is received outside the acceptance criteria ($4 \pm 2^{o}C$)

13.1.5 Field / Laboratory QC Samples

Additional sample volume will be collected for one of every 20 samples per analysis for the purposes of laboratory quality control. Double soil volume is required for organic matrix spike/matrix spike duplicate analysis.

13.2 Analytical Quality Control

The following internal quality control measures will be employed to ensure the quality of analytical data.

13.2.1 Method Blanks

Sources of contamination in the analytical process, whether specific analytes or interferences, need to be identified, isolated, and corrected. The method blank is useful in identifying possible sources of contamination within the analytical process. For this reason, it is necessary that the method blank is initiated at the beginning of the analytical process and encompasses all aspects of the analytical work. As such, the method blank would assist in accounting for potential contamination attributable to glassware, reagents, instrumentation, or other sources, which could affect the sample analysis. One method blank will be analyzed with each analytical series associated with no more than 20 samples. The criterion for method blanks is such that no target compound should be present at or above the laboratory quantitation limit. Data that do not meet the criteria will be qualified using the 5X action rule (10X rule for common laboratory contaminants) according to USEPA Region I Data Validation Guidelines, Revisions December 1996.

13.2.2 Matrix Spike/Matrix Spike Duplicates (MS/MSD)

MS/MSD will be used to measure the accuracy of analyte recovery from sample matrices. All MS/MSD will be site specific. For PCBs, metals, VOCs, SVOCs, and cyanide matrix spike/matrix spike duplicate pairs will be analyzed at a frequency of one every 20 samples. Contract control limits are presented in Table 1-3.

The percent recovery (%R) and the relative percent difference (RPD) will be evaluated for MS/MSD data and compared with the acceptance criteria as stated in the appropriate EPA analytical method. When MS recoveries and RPDs are outside QC limits, associated MS blank and surrogate recoveries will be evaluated to attempt to verify the reason for deviation and determine the effects on the reported sample results. In addition, the percent relative standard deviation (%RSD) will be calculated for the unspiked sample, the MS and the MSD and will be considered a triplicate in determining overall precision of the analytical method. The unspiked sample results will be qualified according to the USEPA Region I Data Validation Guidelines, Revisions December 1996 for any data that is outside acceptable control limits. Table 3-3 of the FSP presents the estimated number of MS/MSD analyses for each applicable matrix and parameter.

13.2.3 Surrogates

Surrogates are compounds, which are unlikely to occur under natural conditions that have properties similar to the analytes of interest. This type of control is primarily used for organic samples analyzed by GC/MS and GC methods and is added to the sample prior to extraction. The surrogate spike is utilized to provide broader insight into the proficiency and efficiency of an analytical method on a spike specific basis. Contract control limits are presented in Table 1-2.

If surrogate recoveries exceed specified QC limits, then the analytical results need to be evaluated thoroughly in conjunction with other control measures. Recoveries for surrogate compounds in samples, QC samples and blanks must be within the QC acceptance criteria as specified in the appropriate EPA analytical method. Samples with surrogate compounds outside acceptance will be qualified according to USEPA Region I Data Validation Guidelines, Revisions December 1996. Surrogate compounds will be selected utilizing the guidance provided in the analytical methods summarized in Table 3-1 of the FSP.

13.2.4 Calibration Standards

Compliance requirements for initial calibration are established to ensure that the instrument is capable of producing acceptable qualitative and quantitative data. Calibration check standards will be analyzed as specified in the applicable analytical method. In analyses where internal standards are used, a calibration check standard will only be analyzed in the beginning of an analytical series. If the results of the calibration check standard exceeds specified tolerances, then all samples analyzed since the last acceptable calibration check standard will be re-analyzed

Laboratory instrument calibration standards will be selected utilizing the guidance provided in the analytical methods summarized in Table 3-1 of the FSP. Calibration data will be evaluated based on USEPA Region I Data Validation Guidelines, Revisions December 1996. Data that does not meet acceptance criteria will be qualified accordingly.

13.2.5 Internal Standards

Instrument performance, stability and laboratory precision throughout an analytical sequence is monitored by the addition of internal standard compounds. Internal standard areas and retention times are monitored for organic analysis performed by GC/MS methods. Method specific internal standard compounds are spiked into all field samples, calibration standards and QC samples after preparation and prior to analysis. If the internal standard areas in one or more samples exceed the specified tolerances, then the instrument will be recalibrated and all affected samples reanalyzed.

The acceptability of internal standard performance will be determined using the guidance provided within the analytical methods summarized in Table 3-1 of the FSP. Sample results with internal standard areas and/or retention time data outside control limits will be qualified based on USEPA Region I Data Validation Guidelines, Revisions December 1996

13.2.6 Reference Standards

Reference standards are standards of known concentration, and independent in origin from the calibration standards. Reference standards, are generally available through the USEPA, the National Bureau of Standards, or are specified in analytical methods. The intent of reference standard analysis is to provide insight into the analytical proficiency within an analytical series.

14 DATA ACQUISITION REQUIREMENTS (NON-DIRECT MEASUREMENT)

Data generated from previous sampling activities have been used to determine the areas where the delineation refinement is to take place. The data was generated through previous investigations as described in the Section 5.2 of this QAPP. As these locations are to be used as points of reference for the further delineation, this data was accepted as reported from the previous investigation reports.

15 DOCUMENTATION, RECORDS, AND DATA MANAGEMENT

After field and laboratory data are obtained, the data will be subject to the following:

- Reduction or manipulation mathematically or otherwise into meaningful and useful forms;
- Review;
- Organization, interpretation, and reporting; and
- External data review.

The subsections below present descriptions of the data reduction, review, and reporting activities that will be conducted in the field and laboratory as part of the sampling and analysis program.

15.1 Project Documentation and Records

Each data set received in electronic or hardcopy format will be entered into the database by the Database Manager. After entry into the database, all data will be verified by designated technical personnel against the appropriate paperwork (field notes, laboratory reports, chain-of-custody forms, etc.), and any corrections necessary submitted to the Database Manager. Upon verification of the data set, the designated technical personnel will initial and date the paperwork, and submit to the Project Manager for placement in the central file.

15.2 Screening Laboratory Data Package Deliverables

The fixed laboratory data package must adhere to the following general requirements:

- The data package must contain all original documents where possible
- The data package must be legible
- The data package must be clearly labeled.
- The data package must be arranged in increasing alphanumeric sample number order.

The laboratory data package contents must include:

- Tabulated summary forms for
  - Field sample data (in order of increasing client sample identification number)
  - Laboratory Standards (in chronological order by instrument
  - QC samples (in chronological order by type of QC sample
  - Blanks (in chronological order by instrument
- Raw data for field samples, laboratory standards, QC samples, and blanks (in chronological order by instrument
- Laboratory logbook pages for preparation and analysis of field samples, standards, QC samples, and blanks.
- Chain-of custody documentation
- Other project specific documents in laboratory's possession.

All reports must be paginated. The laboratory must also document any difficulties, QAQC deficiencies and corrective actions taken.

15.3 Fixed Laboratory Data package Deliverables

The fixed laboratory data package must adhere to the following general requirements:

- The data package must contain all original documents where possible
- The data package must be legible
- The data package must be clearly labeled.
- The data package must be arranged in increasing alphanumeric sample number order.
- The data package must be paginated consecutively in ascending order.

The laboratory data package contents must include:

- Cover page, title, and table of contents
- Case narrative
- Tabulated summary forms for
  - Field sample data (in order of increasing client sample identification number)
  - Laboratory Standards (in chronological order by instrument
  - QC samples (in chronological order by type of QC sample
  - Blanks (in chronological order by instrument
- Raw data for field samples, laboratory standards, QC samples, and blanks (in chronological order by instrument
- Laboratory logbook pages for preparation and analysis of field samples, standards, QC samples, and blanks.
- Chain-of custody documentation
- Other project specific documents in laboratory's possession.

All reports must be paginated. The laboratory must also document any difficulties, QAQC deficiencies and corrective actions taken.

All original laboratory data must be readily traceable to the following:

- Date of Analysis
- The order sample analysis was performed
- The personnel who performed, reviewed, and validated the work
- Sample identification numbers
- Method used to acquire the data.
- Name and location of laboratory performing analyses.

15.4 Data Reporting Formats

The selected analytical laboratory will generate analytical data using their standard format. Data deliverables will be assembled in accordance with USEPA, Region I Data Validation Guidelines format for Tier III data deliverables. The elements and contents of the data deliverables package of the report are described in Section 15.3 of this report.

15.5 Data Handling and Management

Each data set received in electronic or hardcopy format will be entered into the database by the Database Manager. After entry into the database, all data will be verified by designated technical personnel against the appropriate paperwork (field notes, laboratory reports, chain-of-custody forms, etc.), and any corrections necessary submitted to the Database Manager. Upon verification of the data set, the designated technical personnel will initial and date the paperwork, and submit to the Project Manager for placement in the central file.

15.6 Data Tracking and Control

Each data set received in electronic or hardcopy format will be entered into the database by the Database Manager. After entry into the database, all data will be verified by designated technical personnel against the appropriate paperwork (field notes, laboratory reports, chain-of-custody forms, etc.), and any corrections necessary submitted to the Database Manager. Upon verification of the data set, the designated technical personnel will initial and date the paperwork, and submit to the Project Manager for placement in the central file.

Archiving of the electronic project database will be routinely accomplished. Data will be backed up on a no-more-than weekly base. Data also will be backed up at the conclusion of the project. The permanent archive for the analytical and geological/hydrological data will be the hardcopy files maintained by LEA. These files will be maintained for a period of ten years upon completion of all documentation requirements of the IWP. Requirements for the performance of the data processing system are found in section 5 of the IWP.

Data will be retained in a secure database by LEA. This database will be updated at each step of the process described above, and transferred electronically to the EPA GIS system as identified in Section 5 of the Implementation Work Plan.

15.7 Field Data Reduction

Information collected in the field through visual observation, manual measurement, and/or field instrumentation will be recorded on field forms. The LEA Task Manager will review such data for adherence to the FSP and for consistency. Concerns identified as a result of this review will be discussed with the field personnel, corrected if possible, and as necessary, incorporated into the data evaluation process.

15.7.1 Sample Log Sheets

The field team will complete sample log sheets for the soil, sediment, and aqueous samples collected. The sample log sheets contain information about sample location, date, and time of the sample collection, as well as a sample description, analysis, and sample containers.

15.7.2 Packing List/Chain-Of-Custody Record and Custody Seal

The original packing list/chain-of-custody (COC) record will be completed by the Task Manager (or designee). The completed COC will be enclosed in plastic and secured to the inside lid of the sample cooler prior to shipment to the laboratory. If multiple coolers are required to ship a single set of samples, the chain-of-custody form will be included in the cooler labeled “cooler #1 of X". A copy of the chain of custody form is retained for the project files. Shipping coolers are sealed with tape and two signed and dated custody seals are placed across the cooler opening. Copies of these chain-of-custody forms and the custody seals are presented as Figures 3-1 through 3-4 in the FSP.

The laboratory custodian receiving the samples signs and dates the chain-of-custody records to acknowledge receipt of the samples. The laboratory is then responsible for maintaining sample custody records and returning the original chain-of-custody form with the data analysis results.

15.7.3 Field Modification Record

Changes in field operating procedures may be necessary because of changed field conditions or unanticipated events. A summary of the sequence of events associated with field changes is as follows:

1. If a substantial change is required, the LEA Task Manager or designee notifies the LEA Project Manager of the need for the change.

2. If necessary, the LEA Project Manager will discuss the change with pertinent individuals, e.g., the EPA Remedial Project Manager (RPM), and will provide verbal approval or denial to the LEA Task Manager for the proposed change.

3. The LEA Task Manager will document the change on a Field Modification Record (FMR) form and forward the form to the LEA Project Manager at the earliest convenient time.

4. The Project Manager will sign the form and distribute copies to the LEA Program Manager, Quality Assurance Officer, LEA Task Manager, and the project file.

A copy of the completed FMR form will also be attached to the field copy of any affected documents, i.e., Sampling and Analysis Plan.

15.8 Analytical Data Report Format

15.8.1 Data Recording

Screening analytical data generated during the study will be reduced to a concise form. The analytical results will be managed using an existing computer program developed specifically for chemical databases. QA/QC procedures will be implemented to ensure that no errors occur during data entry. The computer operator checks the database entries, and the database printouts are checked against the original laboratory sheets by a chemist.

Analytical data will be received as a hardcopy and on diskettes or other electronic format. After the data are electronically transferred into the LEA Database, the data will be checked against the chain of custody for and hardcopy laboratory reports for consistency and corrections will be made as necessary. Analytical parameter names will be checked against an existing library table. Laboratory QC sample results will be presented in a separate table.

Draft data verification tables will be printed. The electronic data verification database tables will be reviewed and edited as necessary based on the findings during data verification process. The final tables will be used to edit the database and consequently printed and submitted to the project files with accompanying memoranda.

15.8.2 Data Validation

Prior to any analysis of any samples by Method 8290A, the laboratory will ensure that all applicable criteria to ensure reliable and accurate data generation are met. In addition, all confirmatory sample data will be undergo Tier III validation as stated in Data Validation Standard Operating Procedure for Polychlorinated Dibenzodioxins and Polychlorinated Dibenzofurans Analysis By High Resolution Gas Chromatography/High Resolution Mass Spectrometry, USEPA Region IV, Revision 2.0, October, 1998. Evaluation of data by these guidelines will serve to indicate the validity of the analytical data generated.

15.8.3 Data Transmittal

The following section describes the transmittal of data from off-site laboratories and field activities to the LEA database.

15.8.3.1 Electronic Data Entry

Data received from off-site analytical laboratories in electronic format will be checked for completeness by comparing data received with data analyses requested in the Chain-of-Custody form. Electronics disks will be logged in, checked to see that the files received match the transmittal paperwork, copied, and archived in the project files.

The electronic data files will be downloaded into temporary database files; this download process will be conducted primarily by the database manager. The downloaded data will be loaded into the analytical database and flagged as "not verified" for review by the technical staff.

All of the results received in electronic format will be compared with paper copies of the original lab data sheets. In addition, the sample identification number, location, constituent, and qualifier codes will be verified. Upon completion of electronic data verification, the verified files in the electronic database will be subjected to the same verification procedures as the unverified electronic data files received from the analytical laboratories.

15.8.3.2 Manual Data Entry

Manual data entry will be performed for the analytical data and physical data not received in electronic format. The unverified data will be manually entered into the analytical database with results marked as "not verified". Following data verification, the electronic data will be flagged as "verified."

Verification of manually entered data will be performed using the following procedures:

- A listing will be produced of data entered to serve as a check for completion of entry.
- Each record entered into the database will be compared to original coded sheets; correct values will be highlighted, and incorrect values will be marked with revisions in red. The first page of each data listing will be signed and dated by the person completing the comparison.
- Corrections will be made to the database.
- Listings will be produced of data corrected, and the comparison will be repeated (only to corrected values). This procedure will be repeated until corrections are completed.
- Temporary files will be converted to final files.

ASSESSMENT/OVERSIGHT

The activities for assessing the project implementation and the associated QA/QC are described in this section.

16 ASSESSMENTS AND RESPONSE ACTIONS

This section describes the performance and system audits that will be completed in the field and the laboratory during implementation of the Work Plan.

16.1 Planned Assessments

Field performance and systems audits that will be completed during this project are described in the subsection below.

16.1.1 Readiness Reviews

Readiness reviews of the will be conducted prior to commencing each phase of the project on an as-needed basis to ensure all components required for each phase are in place.

16.1.2 Surveillance

Surveillance of remedial activities will be conducted by the LEA Task Manager or other field personnel on-site on a daily basis. Activities will be documented in the field notes. Any deviations from the FSP or QAPP will be reported to the Project Manager as soon as possible.

16.1.3 Technical System Audit

A Technical System Audit (TSA) shall be performed by the LEA Project Manager or person designated by the Project Manager shortly after commencing remedial activities. The purpose of the TSA is to ensure that the facilities, personnel, training, procedures, and record keeping are in accordance with this QAPP. Performing this early in the project provides opportunity for corrective action.

16.1.4 Audit of Data Quality

An audit of data quality will be performed by the management team prior to final reporting. This will serve to reveal how the data were handled, what judgments were made, and whether uncorrected mistakes were made.

16.1.5 Performance Audits

The LEA Task Manager will monitor field performance. Field performance audit summaries will contain an evaluation of field measurements and field meter calibration to verify that measurements are taken according to established protocols. The QAM will review all field reports and communicate concerns to the Project Manager and/or Task Managers.

16.1.6 Internal System Audits

A field internal system audit is a qualitative evaluation of all components of field QA/QC. The system audit compares scheduled QA/QC activities from this document with actual QA/QC activities completed.

16.1.7 Laboratory Audits

The analytical laboratory will perform internal audits consistent with applicable regulations. LEA reserves the right to conduct an on site audit of the laboratory prior to start of or during analyses for the project. The audit may include, but not be limited to

- Instrumentation logs
- Refrigerator and freezer temperature records
- Analyte –free water supply records
- Standard tracking program
- Reagent chemical log-in, tracking, and disposal
- LIMS data entry and collection
- Review of laboratory SOPs and modifications
- Examining QA procedures and records (solution logs, control charts, etc)

16.1.8 Performance Evaluation Audit

Data for performance evaluation samples will be generated to provide information on the overall accuracy and bias of the analytical method and on laboratory performance. Centredale Manor Performing Parties Group will conduct a performance evaluation (PE) audit as part of the program following "USEPA Region I Performance Evaluation Program Guidance," July 1996 Revision. An overview of the proposed PE audit program is as follows:

- LEA will coordinate PE sample acquisition with the selected vendor prior to initiating the RA program;
- Sample acquisition, handling, and analyses will be in general accordance with USEPA Region 1 guidance criteria; and
- The total number of PE samples will based on one PE sample per 20 confirmatory soil samples;
- All samples in a sample delivery group will be validated based upon a comparison between the vendor-certified performance evaluation (PE) results and the laboratory's reported results. PE samples will be evaluated for false negatives, false positives, and inaccurate target compound quantitation. The PE samples provide information on the magnitude and direction of quantitative bias for the laboratory method. Results that are outside the vendor-certified acceptance limits will be qualified according to USEPA Region I Data Validation Guidelines, Revisions December 1996 and Data Validation Standard Operating Procedure for Polychlorinated Dibenzodioxins and Polychlorinated Dibenzofurans Analysis By High Resolution Gas Chromatography/High Resolution Mass Spectrometry.

PE samples will alternate between soil and aqueous matrices. The soil PE is submitted in an amber vial, making the assessment single-blind. T he soil was initially collected by placing alternate shovels full of a sandy loam soil from Wake County, NC, USA, into two pre-cleaned 55-gallon steel drums. Each drum opening was covered with 3/8-inch mesh screen to provide a rough sieve for removing rocks and sticks. After drying and sterilizing the soil at 170

C for two hours, it was sifted through an 18-20 mesh sieve to provide a more homogeneous particle size. ASTM Standard Method C702-87B was used to quarter and mix the combined soil five times. It was divided into two sets of mixed quarters on the last cycle to provide duplicate samples of the blank soil. Fluorescein disodium salt was used as an independent analyte to verify homogeneity. The soil PE will be used to assess any possible effects due to soil matrix interference.

Aqueous PE samples will be submitted as double blind. The PE will be submitted for the normally submitted equipment blank. The aqueous PE sample will assess method performance on a double-blind basis.

16.2 Assessment Findings and Corrective Action Responses

The results of all audits and reviews, along with recommendations for corrective action, will be given to the LEA Project Manager as soon as possible in order to assess the need for any corrective action. In addition, the audited parties will receive a verbal debriefing following the audit, to be followed by a written report of audit findings within one week of audit completion. The copy of the audit findings will be kept in the project notebook as well.

The identification of significant conditions adverse to quality, the cause of the conditions, and the corrective actions will be documented by the QAM and reported to the appropriate levels of management. The LEA Project Manager will have overall responsibility for implementing the corrective actions and must identify those persons responsible for initiating corrective actions to remedy immediate effects of the problem.

16.3 Additional QAPP Non-conformances

In the event of a deviation of the QAPP (field sampling or analytical problems) noted by project personnel outside of any formal assessment process, the LEA Project Manager will be notified immediately. An assessment of the data quality will be made, and corrective action taken as necessary. The correction action may include, but is not limited to, sample re-analysis or re-sampling.

17 REPORTS TO MANAGEMENT

Daily reports on remedial activities (verbal or written) will be given from field personnel to the LEA Project Manager or person designated by the Project Manager.

Laboratory reports will be given to the Project Manager as received.

Memorandums regarding data validation will be provided to the Project Manager after complete review of the laboratory data package by the data validation staff.

17.1 Internal Reporting

The QAM will review analytical concerns identified by the data review with the laboratory. Supporting data (i.e. historic data, related field or laboratory data) will be reviewed to assist in determining data quality, as appropriate. The QAM will incorporate results of assessments of data usability into a summary that will be submitted to the Project Manager and appropriate Task Managers.

17.2 Work Plan Reporting

The summary report prepared by LEA will contain a QA/QC section summarizing the quality of data collected and/or used as appropriate to the project data quality objectives, which are discussed in this QAPP. The DQ or designee will prepare the QA/QC summaries using reporting and memoranda documenting the data assessment and review.

17.3 Progress Reports

Monthly progress reports will be prepared by the LEA Project Manager and submitted to the appropriate regulatory personnel (EPA WAM, etc.)

DATA VALIDATION AND USABILITY

This section describes the data review, data verification, and data evaluation processes necessary to determine whether the data conforms to the specified criteria satisfying the project objectives.

18 VERIFICATION AND VALIDATION REQUIREMENTS

Data will undergo data evaluation based on an assessment of the data summary and quality assurance forms consistent with the Region I Data Validation Functional Guidelines for Evaluating Environmental Analyses. Data validation will ensure that the data is of known quality and technically defensible. The EPA Region I Functional Guidelines for Data Validation are as follows:

- USEPA, Region I Data Validation Functional Guidelines for Organic Analyses, December 1996.
- USEPA, Region I Data Validation Functional Guidelines for Inorganic Analyses, June 1988.
- USEPA, Region I Data Validation Functional Guidelines for Pesticide and PCB Analyses, July 1988.
- Data Validation Standard Operating Procedure for Polychlorinated Dibenzodioxins and Polychlorinated Dibenzofurans Analysis By High Resolution Gas Chromatography/High Resolution Mass Spectrometry, USEPA Region IV, Revision 2.0, October, 1998

19 VERIFICATION AND VALIDATION PROCEDURES

The analytical data generated during the IWP will be evaluated with respect to precision, accuracy, and completeness and compared to the data quality objectives set forth in this QAPP. A summary of QC limits required to evaluate analytical performance is provided in Tables 1-1 through 1-3.

Following the collection of field sampling and analytical data, various statistical analyses will be performed to determine the data usability and sensitivity of the data.

19.1.1 Data Precision Assessment Procedures

Field precision will be controlled using experienced field personnel, properly calibrated instruments, and duplicate field measurements. Field duplicates will be used to assess precision for the entire measurement system, including sampling, handling, shipping, storage, preparation, and analysis.

Laboratory data precision analyses will be monitored using matrix spike/matrix spike duplicate sample analyses and performance evaluation samples. The precision of data will be measured by calibration of the relative percent difference (RPD) by the following equation:

$$RPD = \frac{(A-B)}{(A+B)/2} \times 100$$

Where:

A = Analytical results from first duplicate measurement;
B = Analytical results from second duplicate measurement.

19.1.2 Data Accuracy Assessment Procedures

The accuracy of field precision will be controlled by experienced field personnel, properly calibrated field instruments, and adherence to established protocols. The accuracy of field instruments will be assessed by review of calibration and maintenance logs.

Laboratory accuracy will be assessed via the use of matrix spike, surrogate spikes, PE samples, and reference standards. Where available and appropriate, QA performance standards will be analyzed periodically to assess laboratory accuracy. Accuracy will be calculated in terms of percent recovery as follows:

$$\text{Percent Recovery} = \frac{(A-X)}{B} \times 100$$

Where:

A = Value measured in spiked sample;
X = Value measured in original sample;
B = True value of amount added to sample or true value of standard.

This formula is derived under the assumption of constant accuracy between the original and spiked measurements. Accuracy objectives for matrix spike recoveries are found in Table 1-3.

19.1.3 Data Completeness Assessment Procedures

Completeness of field or laboratory data set will be calculated by comparing the number of valid sample results generated to the total number of results generated:

$$\text{Completeness (\%)} = \frac{\text{Number of Valid Results}}{\text{Total Number of Results Generated}} \times 100$$

As a general guideline, overall project completeness is expected to be at least 90%. The assessment of completeness will require professional judgment to determine data usability for intended purposes.

20 DATA USABILITY/REONCLILATION WITH PROJECT QUALITY OBJECTIVES

The results obtained from the project will be reconciled with the DQOs to satisfy the goals for precision, accuracy, representativeness, and data completeness. Limitations on the use of laboratory or field data will be communicated to the LEA Project Manager. Technical reasons for data rejection or qualification will be explained in the data validation report. Re-analysis or new sampling of the locations/samples affected might be required when critical data results do not meet the established DQOs. The following are the objectives of the data validation process:

- Assess and summarize the analytical quality and defensibility of data for the end user.
- Document for the historical record all factors contributing to “analytical error” that ultimately affect data usability, such as: data discrepancies, poor laboratory practices that impact data quality, site locations for which samples were difficult to analyze, i.e., matrix effects. Also, document any “sampling error” that may be identified by the data validation process, such as contaminated trip blanks or equipment blanks, incorrect sample storage or preservation techniques, improper sampling containers, and improper sampling techniques, i.e. headspace in VOC vials.
- Assist in monitoring laboratory performance
- Identify contractually non-compliant data that are unusable or qualified data.

TABLES

Table 1-1
PROJECT SPECIFIC PRACTICAL QUANTITATION LIMITS FOR CONSTITUENTS FOR WHICH ANALYSIS MAY BE CONDUCTED

CAS#	Analyte Name	Type	Project Quantitation Limits				
			Method	Aqueous	Units	Soil	Units
67-64-1	Acetone	VOA	SW846-8260B	10.0	ug/l	20.0	ug/kg
75-05-8	Acetonitrile	VOA	SW846-8260B	20.0	ug/l	100.0	ug/kg
107-02-8	Acrolein	VOA	SW846-8260B	20.0	ug/l	100.0	ug/kg
107-13-1	Acrylonitrile	VOA	SW846-8260B	20.0	ug/l	100.0	ug/kg
107-05-1	Allyl chloride	VOA	SW846-8260B		ug/l	5000.0	ug/kg
71-43-2	Benzene	VOA	SW846-8260B	1.0	ug/l	5.0	ug/kg
75-27-4	Bromodichloromethane	VOA	SW846-8260B	1.0	ug/l	5.0	ug/kg
75-25-2	Bromoform	VOA	SW846-8260B	1.0	ug/l	5.0	ug/kg
74-83-9	Methyl bromide (bromomethane)	VOA	SW846-8260B	1.0	ug/l	10.0	ug/kg
78-93-3	Methyl ethyl ketone (2-Butanone)	VOA	SW846-8260B	10.0	ug/l	20.0	ug/kg
75-15-0	Carbon disulfide	VOA	SW846-8260B	1.0	ug/l	5.0	ug/kg
56-23-5	Carbon tetrachloride	VOA	SW846-8260B	1.0	ug/l	5.0	ug/kg
108-90-7	Chlorobenzene	VOA	SW846-8260B	1.0	ug/l	5.0	ug/kg
75-00-3	Chloroethane	VOA	SW846-8260B	1.0	ug/l	10.0	ug/kg
67-66-3	Chloroform	VOA	SW846-8260B	1.0	ug/l	5.0	ug/kg
126-99-8	Chloroprene	VOA	SW846-8260B	2.0	ug/l	5.0	ug/kg
74-87-3	Methyl chloride (Chloromethane)	VOA	SW846-8260B	1.0	ug/l	10.0	ug/kg
124-48-1	Dibromochloromethane	VOA	SW846-8260B	1.0	ug/l	5.0	ug/kg
96-12-8	1,2-Dibromo-3-chloropropane	VOA	SW846-8260B	2.0	ug/l	10.0	ug/kg
74-95-3	Dibromomethane (methylene bromide)	VOA	SW846-8260B	1.0	ug/l	5.0	ug/kg
110-57-6	trans-1,4-Dichloro-2-butene	VOA	SW846-8260B	1.0	ug/l	5.0	ug/kg
75-71-8	Dichlorodifluoromethane	VOA	SW846-8260B	1.0	ug/l	10.0	ug/kg
75-34-3	1,1-Dichloroethane	VOA	SW846-8260B	1.0	ug/l	5.0	ug/kg
107-06-2	1,2-Dichloroethane	VOA	SW846-8260B	1.0	ug/l	5.0	ug/kg
75-35-4	1,1-Dichloroethene	VOA	SW846-8260B	1.0	ug/l	5.0	ug/kg
156-59-2	cis-1,2-Dichloroethene	VOA	SW846-8260B	0.5	ug/l	2.5	ug/kg
156-60-5	trans-1,2-Dichloroethene	VOA	SW846-8260B	0.5	ug/l	2.5	ug/kg
78-87-5	1,2-Dichloropropane	VOA	SW846-8260B	1.0	ug/l	5.0	ug/kg
542-75-6	1,3-Dichloropropene (total)	VOA	SW846-8260B	0.5	ug/l	10.0	ug/kg
123-91-1	1,4-Dioxane	VOA	SW846-8260B	200.0	ug/l	500.0	ug/kg
100-41-4	Ethylbenzene	VOA	SW846-8260B	1.0	ug/l	5.0	ug/kg
97-63-2	Ethyl methacrylate	VOA	SW846-8260B	1.0	ug/l	5.0	ug/kg
591-78-6	2-Hexanone	VOA	SW846-8260B	10.0	ug/l	20.0	ug/kg
78-83-1	Isobutyl alcohol	VOA	SW846-8260B	50.0	ug/l	200.0	ug/kg
126-98-7	Methacrylonitrile	VOA	SW846-8260B	2.0	ug/l	5.0	ug/kg
75-09-2	Methylene chloride	VOA	SW846-8260B	1.0	ug/l	5.0	ug/kg
80-62-6	Methyl methacrylate	VOA	SW846-8260B	2.0	ug/l	5.0	ug/kg
108-10-1	4-Methyl-2-pentanone	VOA	SW846-8260B	10.0	ug/l	20.0	ug/kg
1634-04-4	Methyl-tert-butyl ether	VOA	SW846-8260B	5.0	ug/l	20.0	ug/kg
107-12-0	Propionitrile	VOA	SW846-8260B	4.0	ug/l	20.0	ug/kg
100-42-5	Styrene	VOA	SW846-8260B	1.0	ug/l	5.0	ug/kg
630-20-6	1,1,1,2-Tetrachloroethane	VOA	SW846-8260B	1.0	ug/l	5.0	ug/kg
79-34-5	1,1,2,2-Tetrachloroethane	VOA	SW846-8260B	1.0	ug/l	5.0	ug/kg
127-18-4	Tetrachloroethene	VOA	SW846-8260B	1.0	ug/l	5.0	ug/kg
108-88-3	Toluene	VOA	SW846-8260B	1.0	ug/l	5.0	ug/kg
71-55-6	1,1,1-Trichloroethane	VOA	SW846-8260B	1.0	ug/l	5.0	ug/kg
79-00-5	1,1,2-Trichloroethane	VOA	SW846-8260B	1.0	ug/l	5.0	ug/kg
79-01-6	Trichloroethene	VOA	SW846-8260B	1.0	ug/l	5.0	ug/kg
75-69-4	Trichlorofluoromethane	VOA	SW846-8260B	1.0	ug/l	10.0	ug/kg
108-05-4	Vinyl acetate	VOA	SW846-8260B	2.0	ug/l	10.0	ug/kg
96-18-4	1,2,3-Trichloropropane	VOA	SW846-8260B	1.0	ug/l	5.0	ug/kg
75-01-4	Vinyl chloride	VOA	SW846-8260B	1.0	ug/l	10.0	ug/kg
1330-20-7	Xylenes (total)	VOA	SW846-8260B	1.0	ug/l	5.0	ug/kg
83-32-9	Acenaphthene	SV	SW846-8270C	10	ug/l	330	ug/kg
208-96-8	Acenaphthylene	SV	SW846-8270C	10	ug/l	330	ug/kg
98-86-2	Acetophenone	SV	SW846-8270C	10	ug/l	330	ug/kg
53-96-3	2-Acetylaminofluorene	SV	SW846-8270C	100	ug/l	3300	ug/kg

Table 1-1
PROJECT SPECIFIC PRACTICAL QUANTITATION LIMITS FOR CONSTITUENTS FOR WHICH ANALYSIS MAY BE CONDUCTED

CAS#	Analyte Name	Type	Project Quantitation Limits				
			Method	Aqueous	Units	Soil	Units
92-67-1	4-Aminobiphenyl	SV	SW846-8270C	50	ug/l	1600	ug/kg
62-53-3	Analine	SV	SW846-8270C	10	ug/l	330	ug/kg
120-12-7	Anthracene	SV	SW846-8270C	10	ug/l	330	ug/kg
140-57-8	Aramite	SV	SW846-8270C	10	ug/l	660	ug/kg
56-55-3	Benzo[a]anthracene	SV	SW846-8270C	10	ug/l	330	ug/kg
205-99-2	Benzo[b]fluoranthene	SV	SW846-8270C	10	ug/l	330	ug/kg
207-08-9	Benzo[k]fluoranthene	SV	SW846-8270C	10	ug/l	330	ug/kg
191-24-2	Benzo[ghi]perylene	SV	SW846-8270C	10	ug/l	330	ug/kg
50-32-8	Benzo[a]pyrene	SV	SW846-8270C	10	ug/l	330	ug/kg
100-51-6	Benzyl alcohol	SV	SW846-8270C	10	ug/l	330	ug/kg
111-91-1	bis(2-Chloroethoxy) methane	SV	SW846-8270C	10	ug/l	330	ug/kg
111-44-4	bis(2-Chloroethyl)ether	SV	SW846-8270C	10	ug/l	330	ug/kg
108-60-1	2,2'-oxybis(1-chloro-Propane)	SV	SW846-8270C	10	ug/l	330	ug/kg
117-81-7	bis(2-Ethylhexyl)phthalate	SV	SW846-8270C	10	ug/l	330	ug/kg
101-55-3	4-Bromophenyl phenyl ether	SV	SW846-8270C	10	ug/l	330	ug/kg
85-68-7	Butyl benzyl phthalate	SV	SW846-8270C	10	ug/l	330	ug/kg
86-74-8	Carbazole	SV	SW846-8270C	10	ug/l	330	ug/kg
106-47-8	4-Chloroaniline	SV	SW846-8270C	10	ug/l	330	ug/kg
59-50-7	4-Chloro-3-methyl phenol	SV	SW846-8270C	10	ug/l	330	ug/kg
91-58-7	2-Chloronaphthalene	SV	SW846-8270C	10	ug/l	330	ug/kg
95-57-8	2-Chlorophenol	SV	SW846-8270C	10	ug/l	330	ug/kg
7005-72-3	4-Chlorophenyl phenyl ether	SV	SW846-8270C	10	ug/l	330	ug/kg
218-01-9	Chrysene	SV	SW846-8270C	10	ug/l	330	ug/kg
132-64-9	Dibenzofuran	SV	SW846-8270C	10	ug/l	330	ug/kg
84-74-2	Di-n-butyl phthalate	SV	SW846-8270C	10	ug/l	330	ug/kg
117-84-0	Di-n-octyl phthalate	SV	SW846-8270C	10	ug/l	330	ug/kg
53-70-3	Dibenz[a,h]anthracene	SV	SW846-8270C	10	ug/l	330	ug/kg
95-50-1	1,2-Dichlorobenzene	SV	SW846-8270C	10	ug/l	330	ug/kg
541-73-1	1,3-Dichlorobenzene	SV	SW846-8270C	10	ug/l	330	ug/kg
106-46-7	1,4-Dichlorobenzene	SV	SW846-8270C	10	ug/l	330	ug/kg
91-94-1	3,3-Dichlorobenzidine	SV	SW846-8270C	50	ug/l	1600	ug/kg
120-83-2	2,4-Dichlorophenol	SV	SW846-8270C	10	ug/l	330	ug/kg
84-66-2	Diethyl phthalate	SV	SW846-8270C	10	ug/l	330	ug/kg
297-97-2	0,0-Diethyl-0-2-pyrazinyl	SV	SW846-8270C	50	ug/l	1600	ug/kg
60-51-5	Dimethoate	SV	SW846-8270C	20	ug/l	660	ug/kg
60-11-7	p-(Dimethylamino)azobenzene	SV	SW846-8270C	20	ug/l	660	ug/kg
57-97-6	7,12-Dimethylbenz(a)anthracene	SV	SW846-8270C	20	ug/l	660	ug/kg
122-09-8	alpha,alpha,-Dimethylphenethylamine	SV	SW846-8270C	50	ug/l		ug/kg
119-93-7	3,3-Dimethylbenzidine	SV	SW846-8270C	50	ug/l	1600	ug/kg
105-67-9	2,4-Dimethylphenol	SV	SW846-8270C	10	ug/l	330	ug/kg
131-11-3	Dimethyl phthalate	SV	SW846-8270C	10	ug/l	330	ug/kg
99-65-0	1,3-Dinitrobenzene	SV	SW846-8270C	10	ug/l	330	ug/kg
534-52-1	4,6-Dinitro-2-methylphenol	SV	SW846-8270C	50	ug/l	1600	ug/kg
51-28-5	2,4-Dinitrophenol	SV	SW846-8270C	50	ug/l	1600	ug/kg
121-14-2	2,4-Dinitrotoluene	SV	SW846-8270C	10	ug/l	330	ug/kg
606-20-2	2,6-Dinitrotoluene	SV	SW846-8270C	10	ug/l	330	ug/kg
117-84-0	Di-n-octyl phthalate	SV	SW846-8270C	10	ug/l	330	ug/kg
88-85-7	Dinoseb	SV	SW846-8270C	20	ug/l	660	ug/kg
122-39-4	Diphenylamine	SV	SW846-8270C	10	ug/l	330	ug/kg
298-04-4	Disulfoton	SV	SW846-8270C	50	ug/l	1600	ug/kg
65-50-0	Ethyl methanesulfonate	SV	SW846-8270C	10	ug/l	330	ug/kg
52-85-7	Famphur	SV	SW846-8270C	10	ug/l	3300	ug/kg
206-44-0	Fluoranthene	SV	SW846-8270C	10	ug/l	330	ug/kg
86-73-7	Fluorene	SV	SW846-8270C	10	ug/l	330	ug/kg
118-74-1	Hexachlorobenzene	SV	SW846-8270C	10	ug/l	330	ug/kg
87-68-3	Hexachlorobutadiene	SV	SW846-8270C	10	ug/l	330	ug/kg
77-47-4	Hexachlorocyclopentadiene	SV	SW846-8270C	50	ug/l	1600	ug/kg
67-72-1	Hexachloroethane	SV	SW846-8270C	10	ug/l	330	ug/kg

Table 1-1
PROJECT SPECIFIC PRACTICAL QUANTITATION LIMITS FOR CONSTITUENTS FOR WHICH ANALYSIS MAY BE CONDUCTED

CAS#	Analyte Name	Type	Project Quantitation Limits				
			Method	Aqueous	Units	Soil	Units
1888-71-7	Hexachloropropene	SV	SW846-8270C	100	ug/l	3300	ug/kg
193-39-5	Indeno(1,2,3-cd)pyrene	SV	SW846-8270C	10	ug/l	330	ug/kg
78-59-1	Isophorone	SV	SW846-8270C	10	ug/l	330	ug/kg
120-58-1	Isosafrole	SV	SW846-8270C	20	ug/l	660	ug/kg
91-80-5	Methapyrilene	SV	SW846-8270C	50	ug/l	1600	ug/kg
56-49-5	3-Methylcholanthrene	SV	SW846-8270C	20	ug/l	660	ug/kg
66-27-3	Methyl methanesulfonate	SV	SW846-8270C	10	ug/l	330	ug/kg
91-57-6	2-Methylnaphthalene	SV	SW846-8270C	10	ug/l	330	ug/kg
95-48-7	2-Methylphenol (o-Cresol)	SV	SW846-8270C	10	ug/l	330	ug/kg
108-39-4	3-Methylphenol ((m-Cresol)	SV	SW846-8270C	10	ug/l	330	ug/kg
106-44-5	4-Methylphenol (p-Cresol)	SV	SW846-8270C	10	ug/l	330	ug/kg
91-20-3	Naphthalene	SV	SW846-8270C	10	ug/l	330	ug/kg
130-15-4	1,4-Naphthoquinone	SV	SW846-8270C	50	ug/l	1600	ug/kg
134-32-7	1-Naphthylamine	SV	SW846-8270C	10	ug/l	330	ug/kg
91-59-8	2-Naphthylamine	SV	SW846-8270C	10	ug/l	330	ug/kg
88-74-4	2-Nitroaniline	SV	SW846-8270C	50	ug/l	1600	ug/kg
99-09-2	3-Nitroaniline	SV	SW846-8270C	50	ug/l	1600	ug/kg
100-01-6	4-Nitroaniline	SV	SW846-8270C	50	ug/l	1600	ug/kg
98-95-3	Nitrobenzene	SV	SW846-8270C	10	ug/l	330	ug/kg
56-57-5	4-Nitoquinoline-1-oxide	SV	SW846-8270C	100	ug/l	3300	ug/kg
88-75-5	2-Nitrophenol	SV	SW846-8270C	10	ug/l	330	ug/kg
100-02-7	4-Nitrophenol	SV	SW846-8270C	50	ug/l	1600	ug/kg
55-18-5	N-Nitrosodiethylamine	SV	SW846-8270C	10	ug/l	330	ug/kg
62-75-9	N-Nitrosodimethylamine	SV	SW846-8270C	10	ug/l	330	ug/kg
86-30-6	N-Nitrosodiphenylamine	SV	SW846-8270C	10	ug/l	330	ug/kg
621-64-7	N-Nitrosodi-n-propylamine	SV	SW846-8270C	10	ug/l	330	ug/kg
924-16-3	N-Nitrosodi-n-butylamine	SV	SW846-8270C	10	ug/l	330	ug/kg
10595-95-6	N-Nitrosomethylethylamine	SV	SW846-8270C	10	ug/l	330	ug/kg
59-89-2	N-Nitrosomorpholine	SV	SW846-8270C	10	ug/l	330	ug/kg
930-55-2	N-Nitrosopyrrolidine	SV	SW846-8270C	10	ug/l	330	ug/kg
99-55-8	5-Nitro-0-toluidine	SV	SW846-8270C	20	ug/l	660	ug/kg
608-93-5	Pentachlorobenzene	SV	SW846-8270C	10	ug/l	330	ug/kg
76-01-7	Pentachloroethane	SV	SW846-8270C	50	ug/l	1600	ug/kg
82-68-8	Pentachloronitrobenzene	SV	SW846-8270C	50	ug/l	1600	ug/kg
87-86-5	Pentachlorophenol	SV	SW846-8270C	10	ug/l	330	ug/kg
62-44-2	Phenacetin	SV	SW846-8270C	20	ug/l	660	ug/kg
85-01-8	Phenanthrene	SV	SW846-8270C	10	ug/l	330	ug/kg
108-95-2	Phenol	SV	SW846-8270C	10	ug/l	330	ug/kg
106-50-3	p-Phenylenediamine	SV	SW846-8270C	100	ug/l	3300	ug/kg
298-02-2	Phorate	SV	SW846-8270C	50	ug/l	1600	ug/kg
109-06-8	2-Picoline	SV	SW846-8270C	20	ug/l	660	ug/kg
23950-58-5	Pronamide	SV	SW846-8270C	20	ug/l	660	ug/kg
129-00-0	Pyrene	SV	SW846-8270C	10	ug/l	330	ug/kg
110-86-1	Pyridine	SV	SW846-8270C	20	ug/l	660	ug/kg
94-59-7	Safrole	SV	SW846-8270C	20	ug/l	660	ug/kg
3689-24-5	Sulfotepp	SV	SW846-8270C	50	ug/l	1600	ug/kg
95-94-3	1,2,4,5-Tetrachlorobenzene	SV	SW846-8270C	10	ug/l	330	ug/kg
58-90-2	2,3,4,6-Tetrachlorophenol	SV	SW846-8270C	50	ug/l	1600	ug/kg
95-53-4	0-Toluidine	SV	SW846-8270C	20	ug/l	660	ug/kg
120-82-1	1,2,4-Trichlorobenzene	SV	SW846-8270C	10	ug/l	330	ug/kg
95-95-4	2,4,5-Trichlorophenol	SV	SW846-8270C	10	ug/l	330	ug/kg
88-06-2	2,4,6-Trichlorophenol	SV	SW846-8270C	10	ug/l	330	ug/kg
126-68-1	0,0,0-Triethylphosphorothiote	SV	SW846-8270C	50	ug/l	1600	ug/kg
99-35-4	1,3,5-Trinitrobenzene	SV	SW846-8270C	50	ug/l	1600	ug/kg
12674-11-2	Aroclor-1016	OCP	SW846-8082	1.0	ug/l	33	ug/kg
11104-28-2	Aroclor-1221	OCP	SW846-8082	1.0	ug/l	33	ug/kg
11141-16-5	Aroclor-1232	OCP	SW846-8082	1.0	ug/l	33	ug/kg

Table 1-1
PROJECT SPECIFIC PRACTICAL QUANTITATION LIMITS FOR CONSTITUENTS FOR WHICH ANALYSIS MAY BE CONDUCTED

CAS#	Analyte Name	Type	Project Quantitation Limits				
			Method	Aqueous	Units	Soil	Units
53469-21-9	Aroclor-1242	OCP	SW846-8082	1.0	ug/l	33	ug/kg
12672-29-6	Aroclor-1248	OCP	SW846-8082	1.0	ug/l	33	ug/kg
11097-69-1	Aroclor-1254	OCP	SW846-8082	1.0	ug/l	33	ug/kg
11096-82-5	Aroclor-1260	OCP	SW846-8082	1.0	ug/l	33	ug/kg
1746-01-6	2,3,7,8-Tetrachlorodibenzo-*p*-dioxin	Diox/F	SW846-8290A	10	pg/L	1.0	pg/g
41903-57-5	Total Tetrachlorodibenzo-*p*-dioxins	Diox/F	SW846-8290A	10	pg/L	1.0	pg/g
40321-76-4	1,2,3,7,8-Pentachlorodibenzo-*p*-dioxin	Diox/F	SW846-8290A	50	pg/L	5.0	pg/g
36088-22-9	Total Pentachlorodienzo-*p*-dioxins	Diox/F	SW846-8290A	50	pg/L	5.0	pg/g
39227-28-6	1,2,3,4,7,8-Hexachlorodibenzo-*p*-dioxin	Diox/F	SW846-8290A	50	pg/L	5.0	pg/g
57653-85-7	1,2,3,6,7,8-Hexachlorodibenzo-*p*-dioxin	Diox/F	SW846-8290A	50	pg/L	5.0	pg/g
19408-74-3	1,2,3,7,8,9-Hexachlorodibenzo-*p*-dioxin	Diox/F	SW846-8290A	50	pg/L	5.0	pg/g
34465-46-8	Total Hexachlorodibenzo-*p*-dioxins	Diox/F	SW846-8290A	50	pg/L	5.0	pg/g
35822-46-9	1,2,3,4,6,7,8-Heptachlorodibenzo-*p*-dioxin	Diox/F	SW846-8290A	50	pg/L	5.0	pg/g
37871-00-4	Total Heptachlorodibenzo-*p*-dioxin	Diox/F	SW846-8290A	50	pg/L	5.0	pg/g
3268-87-9	1,2,3,4,5,6,7,8-Octachloroibenzo-*p*-dioxin	Diox/F	SW846-8290A	100	pg/L	10.0	pg/g
51207-31-9	2,3,7,8-Tetrachlorodibenzo-*p*-furan	Diox/F	SW846-8290A	10	pg/L	1.0	pg/g
55722-27-5	Total Tetrachlorodibenzofurans	Diox/F	SW846-8290A	10	pg/L	1.0	pg/g
57117-41-6	1,2,3,7,8-Pentachlorodibenzo-*p*-furan	Diox/F	SW846-8290A	50	pg/L	5.0	pg/g
57117-31-4	2,3,4,7,8-Pentachlorodibenzo-*p*-furan	Diox/F	SW846-8290A	50	pg/L	5.0	pg/g
30402-15-4	Total Pentachlorodibenzofurans	Diox/F	SW846-8290A	50	pg/L	5.0	pg/g
70648-26-9	1,2,3,4,7,8-Hexachlorodibenzo-*p*-furan	Diox/F	SW846-8290A	50	pg/L	5.0	pg/g
57117-44-9	1,2,3,6,7,8-Hexachlorodibenzo-*p*-furan	Diox/F	SW846-8290A	50	pg/L	5.0	pg/g
72918-21-9	1,2,3,7,8,9-Hexachlorodibenzo-*p*-furan	Diox/F	SW846-8290A	50	pg/L	5.0	pg/g
55684-94-1	Total Hexachlorodibenzofurans	Diox/F	SW846-8290A	50	pg/L	5.0	pg/g
60851-34-5	2,3,4,6,7,8-Hexachlorodibenzo-*p*-furan	Diox/F	SW846-8290A	50	pg/L	5.0	pg/g
67562-39-4	1,2,3,4,6,7,8-Heptachlorodibenzo-*p*-furan	Diox/F	SW846-8290A	50	pg/L	5.0	pg/g
55673-89-7	1,2,3,4,7,8,9-Heptachlorodibenzo-*p*-furan	Diox/F	SW846-8290A	50	pg/L	5.0	pg/g
38998-75-3	Total Heptachlorodibenzofurans	Diox/F	SW846-8290A	50	pg/L	5.0	pg/g
39001-02-0	Octachlorodibenzofuran	Diox/F	SW846-8290A	100	pg/L	10.0	pg/g
7440-36-0	Antimony	M	SW846-6010B	10	ug/l	1	mg/kg
7440-38-2	Arsenic	M	SW846-6010B	10	ug/l	1	mg/kg
7440-39-3	Barium	M	SW846-6010B	200	ug/l	20	mg/kg
7440-41-7	Beryllium	M	SW846-6010B	5	ug/l	0.5	mg/kg
7440-43-9	Cadmium	M	SW846-6010B	2	ug/l	0.2	mg/kg
7440-47-3	Chromium (total)	M	SW846-6010B	5	ug/l	0.5	mg/kg
7440-48-4	Cobalt	M	SW846-6010B	7	ug/l	5	mg/kg
7440-50-8	Copper	M	SW846-6010B	25	ug/l	2.5	mg/kg
7439-92-1	Lead	M	SW846-6010B	3	ug/l	0.3	mg/kg
7439-97-6	Mercury	M	SW846-7470A/7471A	0.2	ug/l	0.1	mg/kg
7440-02-0	Nickel	M	SW846-6010B	40	ug/l	4	mg/kg
7782-49-2	Selenium	M	SW846-6010B	5	ug/l	0.5	mg/kg
7440-22-4	Silver	M	SW846-6010B	5	ug/l	0.5	mg/kg
7440-28-0	Thallium	M	SW846-6010B	10	ug/l	1	mg/kg
7440-31-5	Tin	M	SW846-6010B	100	ug/l	10	mg/kg
7440-62-2	Vanadium	M	SW846-6010B	7	ug/l	5	mg/kg
7440-66-6	Zinc	M	SW846-6010B	20	ug/l	2	mg/kg
7429-90-5	Aluminum	M	SW846-6010B	200	ug/l	20	mg/kg
7440-36-0	Antimony - SPLP/TCLP	M	1311/1312-6010B		N/A	0.01	mg/l
7440-38-2	Arsenic - SPLP/TCLP	M	1311/1312-6010B		N/A	0.01	mg/l
7440-39-3	Barium - SPLP/TCLP	M	1311/1312-6010B		N/A	10	mg/l
7440-41-7	Beryllium - SPLP/TCLP	M	1311/1312-6010B		N/A	0.005	mg/l
7440-43-9	Cadmium - SPLP/TCLP	M	1311/1312-6010B		N/A	0.002	mg/l
7440-47-3	Chromium (total) - SPLP/TCLP	M	1311/1312-6010B		N/A	0.005	mg/l
7440-50-8	Copper - SPLP/TCLP	M	1311/1312-6010B		N/A	1	mg/l
7439-92-1	Lead - SPLP/TCLP	M	1311/1312-6010B		N/A	0.003	mg/l

Table 1-1
PROJECT SPECIFIC PRACTICAL QUANTITATION LIMITS FOR CONSTITUENTS
FOR WHICH ANALYSIS MAY BE CONDUCTED

CAS#	Analyte Name	Type	Project Quantitation Limits				
			Method	Aqueous	Units	Soil	Units
7439-97-6	Mercury - SPLP-E	M	1312-7471A		N/A	0.1	mg/kg
7440-02-0	Nickel - SPLP/TCLP	M	1311/1312-6010B		N/A	0.04	mg/l
7782-49-2	Selenium - SPLP/TCLP	M	1311/1312-6010B		N/A	0.005	mg/l
7440-22-4	Silver - SPLP/TCLP	M	1311/1312-6010B		N/A	0.005	mg/l
7440-28-0	Thallium SPLP/TCLP	M	1311/1312-6010B		N/A	0.01	mg/l
7440-62-2	Vanadium - SPLP/TCLP	M	1311/1312-6010B		N/A	0.007	mg/l
7440-66-6	Zinc - SPLP/TCLP	M	1311/1312-6010B		N/A	1	mg/l
SA0011	Hexavalent Chromium	WC	SW846 7196A	0.02	mg/l	1	mg/kg
5289290-40-0	Total Petroleum Hydrocarbons	Phy	EPA 418.1	1	mg/l	10	mg/kg

NOTES:

(1) Fractions: VOA (Volatile Organic, DAI (Direct Aqueous Injection), SV (Semivolatile Organic), OCP (Organochlorine Pesticide), OP (Organophospohorus Pesticide, H (Herbicide), Diox/F (Dioxin/Furan), M (Metal), Phy (Physical), and WC (Wet Chemistry Parameter)

(2) Fictitious CAS number created to represent the coeluting isomers 3-methylphenol and 4-methylphenol.

(3) The following VOA compounds are considered poor purging compounds and the above stated detection limits may be difficult for most labs to achieve: acetone, acetonitrile, acrolein, MEK, carbon disulfide, t-1,4-dichloro-2-butene, 1,4-dioxane, 2-hexanone isopropyl alcohol, methacrylonitrile, MIBK. This may be of issue particularly if these compounds are contituents of concern.

SW-846 - "Test Methods for Evaluating Solid Waste, Physical Chemical Methods," third edition.

EPA - "Methods for Chemical Analysis of Water and Wastes," EPA 600 4/79-020

Table 1-2
ACCURACY AND PRECISION DATA QUALITY OBJECTIVES

Parameter	Audit	Compounds	Aqueous Control Limits	Solid Control Limits
TCL Volatile Compounds	Lab blank, trip blank, or field blank	All TCL Compounds	<5X the QL or methylene chloride, and <QL for all other compounds	<5X the QL or methylene chloride, and <QL for all other compounds
	Matrix Spike Duplicate Precision	All TCL Compounds	Table 1-3	Table 1-3
	Matrix Spike Recovery	All TCL Compounds	Table 1-3	Table 1-3
	Laboratory Control Sample Recovery	All TCL Compounds	Table 1-3	Table 1-3
	Surrogate Spike Recoveries	4-Bromofluorobenzene, 1,2-Dichloroethane-d4, Toluene-d8, Dibromofluoromethane	74-116, 61-128, 76-110, 73-122	47-158, 61-130, 60-143, 59-138
TCL Semivolatile Compounds	Lab blank, trip blank, or field blank	All TCL Compounds	<QL for all compounds	<QL for all compounds
	Matrix Spike Duplicate Precision	All TCL Compounds	Table 1-3	Table 1-3
	Matrix Spike Recovery	All TCL Compounds	Table 1-3	Table 1-3
	Laboratory Control Sample Recovery	All TCL Compounds	Table 1-3	Table 1-3
	Surrogate Spike Recoveries	2-Fluorobiphenyl, 2-Fluorophenol, 2,4,6-Tribromophenol, Nitrobenzene-d5, Phenol-d5, Terphenyl-d14	30-110, 13-110, 21-122, 32-112, 10-113, 10-144	43-110, 11-116, 35-116, 42-110, 25-115, 37-137

Table 1-2
ACCURACY AND PRECISION DATA QUALITY OBJECTIVES

Parameter	Audit	Compounds	Aqueous Control Limits	Solid Control Limits
TCL Pesticides/ PCB Compounds	Lab blank, trip blank, or field blank	All TCL Compounds	<QL for all compounds	<QL for all compounds
	Matrix Spike Duplicate Precision	All TCL Compounds	Table 1-3	Table 1-3
	Matrix Spike Recovery	All TCL Compounds	Table 1-3	Table 1-3
	Laboratory Control Sample Recovery	All TCL Compounds	Table 1-3	Table 1-3
	Surrogate Spike Recoveries	Pest (Decachlorobiphenyl, Tetrachloro-m-xylene)	Pest: 10-147 & 39-130, PCB: 24-128 & 45-120	Pest: 18-145 & 31-131, PCB: 23-141 & 31-127
TAL Metals plus Tin	Lab blank, trip blank, or field blank	All TCL Compounds	<PRDL for all compounds	<PRDL for all compounds
	Laboratory Duplicate Precission	All TCL Compounds	Table 1-3	Table 1-3
	Matrix Spike Recovery	All TCL Compounds	Table 1-3	Table 1-3
	Laboratory Control Sample Recovery	All Metals	Table 1-3	Table 1-3

Table 1-2
ACCURACY AND PRECISION DATA QUALITY OBJECTIVES

Parameter	Audit	Compounds	Aqueous Control Limits	Solid Control Limits
Dioxins/ Dibenzoflurans	Lab blank, trip blank, or field blank	All Compounds	<QL for all compounds	<QL for all compounds
	Matrix Spike Duplicate Precision	All Compounds	Table 1-3	Table 1-3
	Matrix Spike Recovery	All Compounds	Table 1-3	Table 1-3
	Laboratory Control Sample Recovery	All Compounds	Table 1-3	Table 1-3
	Recovery Standard Recovery	^{13}C-1,2,3,4-TCDD	>40%	>40%
	Internal Standard Recovery	$^{13}C_{12}$-2,3,7,8-TCDD $^{13}C_{12}$-1,2,3,7,8-PeCDD $^{13}C_{12}$-1,2,3,6,7,8-HxCDD $^{13}C_{12}$-1,2,3,4,6,7,8-HpCDD $^{13}C_{12}$-OCDD $^{13}C_{12}$-2,3,7,8-TCDF $^{13}C_{12}$-1,2,3,7,8-PeCDF $^{13}C_{12}$-1,2,3,4,7,8-HxCDF $^{13}C_{12}$-1,2,3,4,6,7,8-HpCDF	40-135%	40-135%

Notes:

QL = Quantitation limit; PRDL = Project required detection Limit; TCL = TargetCompound List; NA= Not Applicable

VOC and SVOC surrogate recoveries updated to reflect most current method specifications on 5/5/01

Table 1-3
MATRIX SPIKE AND LABORATORY CONTROL SAMPLE PRECISION AND ACCURACY OBJECTIVES

CAS#	Analyte Name	Aqueous			Solid/Soil		
		MS/MSD % Recovery	MS/MSD or LD % RPD	LCS% Recovery	MS/MSD % Recovery	MS/MSD or LD % RPD	LCS% Recovery
67-64-1	Acetone	45-128	30	22-200	10-200	66	58-130
71-43-2	Benzene	78-118	20	80-116	55-138	20	75-129
75-27-4	Bromodichloromethane	80-146	30	87-130	47-131	51	72-125
75-25-2	Bromoform	58-176	30	76-150	26-141	64	43-149
74-83-9	Methyl bromide	N/A	N/A	N/A	N/A	N/A	N/A
78-93-3	Methyl ethyl ketone	N/A	N/A	N/A	N/A	N/A	N/A
75-15-0	Carbon disulfide	69-138	41	73-139	27-149	73	50-137
56-23-5	Carbon tetrachloride	63-176	30	75-149	32-143	68	57-137
108-90-7	Chlorobenzene	76-117	20	76-117	49-139	22	75-127
75-00-3	Chloroethane	59-142	30	66-126	32-140	66	31-144
67-66-3	Chloroform	83-141	30	84-128	59-128	46	73-115
74-87-3	Methyl chloride	N/A	N/A	N/A	N/A	N/A	N/A
124-48-1	Chlorodibromomethane	N/A	N/A	N/A	N/A	N/A	N/A
75-34-3	1,1-Dichloroethene	62-130	20	63-130	43-147	27	55-142
107-06-2	1,2-Dichloroethene	86-115	30	82-116	47-127	60	73-115
75-35-4	1,1-Dichloroethane	88-127	30	86-123	56-130	54	77-119
540-59-0	1,2-Dichloroethane (total)	71-160	30	79-136	56-126	38	78-121
78-87-5	1,2-Dichloropropane	87-114	30	82-115	54-125	43	78-116
10061-01-5	cis-1,3-Dichloropropene	82-130	30	84-130	30-138	49	71-125
10061-02-6	trans-1,3-dichloropropene	73-147	30	84-130	34-134	57	67-125
100-41-4	Ethylbenzene	86-132	30	86-116	36-133	72	79-114
591-78-6	Methyl butyl ketone	N/A	N/A	N/A	N/A	N/A	N/A
75-09-2	Methylene chloride	82-115	30	78-118	45-129	49	58-130
108-10-1	Methyl isobutyl ketone	N/A	N/A	N/A	N/A	N/A	N/A
100-42-5	Styrene	83-120	30	85-117	23-136	65	80-114
79-34-5	1,1,2,2-Tetrachloroethane	88-116	30	85-118	33-162	90	70-133
127-18-4	Tetrachloroethene	85-121	30	88-113	31-137	81	72-120
108-88-3	Toluene	70-119	20	74-119	46-147	24	71-130
71-55-6	1,1,1-Trichloroethane	71-162	30	78-140	48-132	57	67-123
79-00-5	1,1,2-Trichloroethane	86-129	30	83-122	58-128	52	82-116
79-01-6	Trichloroethene	62-130	20	75-122	46-143	23	70-131
75-01-4	Vinyl chloride	88-126	30	61-120	30-136	80	24-152
1330-20-7	Xylenes (total)	89-121	30	87-116	33-135	78	80-114
95-50-1	1,2-Dichlorobenzene	N/A	N/A	N/A	N/A	N/A	N/A
541-73-1	1,3-Dichlorobenzene	N/A	N/A	N/A	N/A	N/A	N/A

Table 1-3
MATRIX SPIKE AND LABORATORY CONTROL SAMPLE
PRECISION AND ACCURACY OBJECTIVES

CAS#	Analyte Name	Aqueous			Solid/Soil		
		MS/MSD % Recovery	MS/MSD or LD % RPD	LCS% Recovery	MS/MSD % Recovery	MS/MSD or LD % RPD	LCS% Recovery
106-46-7	1,4-Dichlorobenzene	N/A	N/A	N/A	N/A	N/A	N/A
87-68-3	Hexachlorobutadiene	N/A	N/A	N/A	N/A	N/A	N/A
83-32-9	Acenaphthene	26-118	35	39-118	13-133	44	44-108
208-96-8	Acenaphthylene	49-111	51	51-110	43-120	75	55-110
120-12-7	Anthracene	49-118	51	54-116	34-137	83	57-116
56-55-3	Benzo[a]anthracene	48-115	51	49-112	30-136	63	56-110
205-99-2	Benzo[b]fluoranthene	44-123	54	51-115	31-139	67	54-116
207-08-9	Benzo[k]fluoranthene	46-123	53	52-116	30-133	84	54-110
191-24-2	Benzo[ghi]perylene	44-122	55	47-118	23-142	89	48-124
50-32-8	Benzo[a]pyrene	44-122	51	50-116	28-142	86	56-115
111-91-1	bis(2-Chloroehtoxy)methane	57-114	49	54-112	46-116	97	59-110
111-44-4	bis(2-Chloroethyl)ether	57-120	51	59-114	49-123	93	62-111
108-60-1	bis(2-Chloroisopropyl)ether	53-122	52	53-118	41-125	89	53-115
117-81-7	bis(2-Ethylhexyl)phthalate	43-128	84	49-124	36-131	54	53-115
101-55-3	4-Bromophenyl phenyl ether	51-119	51	56-113	47-121	95	58-110
85-68-7	Butyl benzyl phthalate	41-127	84	46-121	34-136	94	54-113
106-47-8	4-Chloroaniline	10-110	99	21-110	10-110	99	28-110
59-50-7	4-Chloro-3-methylphenol	21-124	55	29-124	17-128	55	43-110
91-58-7	2-Chloronaphthalene	51-119	51	50-116	43-125	75	52-116
95-57-8	2-Chlorophenol	19-124	43	19-124	17-116	54	43-110
7005-72-3	4-Chlorophenyl phenyl ether	51-118	51	56-112	47-119	74	59-110
218-01-9	Chrysene	49-118	52	49-118	28-139	63	56-110
132-64-9	Dibenzofuran	51-117	51	53-112	35-132	58	57-110
84-74-2	Di-n-butyl phthalate	41-121	53	50-116	44-128	74	58-114
53-70-3	Dibenz[a,h]anthracene	45-127	57	48-124	31-142	99	50-129
95-50-1	1,2-Dichlorobenzene	43-112	85	44-110	49-118	90	61-110
541-73-1	1,3-Dichlorobenzene	35-114	89	38-110	50-113	98	60-110
106-46-7	1,4-Dichlorobenzene	18-110	36	28-110	18-110	59	38-100
91-94-1	3,3-Dichlorobenzidine	10-110	99	10-110	10-110	99	22-110
120-83-2	2,4-Dichlorophenol	52-121	88	51-118	45-122	85	60-111
84-66-2	Diethyl phthalate	10-148	81	14-135	45-122	76	57-112
105-67-9	2,4-Dimethylphenol	10-125	62	10-123	31-119	99	41-110
131-11-3	Dimethyl phthalate	10-159	99	10-150	48-124	75	60-111
534-52-1	4,6-Dinitro-2-methylphenol	20-158	99	22-143	10-142	99	37-126

Table 1-3
MATRIX SPIKE AND LABORATORY CONTROL SAMPLE
PRECISION AND ACCURACY OBJECTIVES

CAS#	Analyte Name	Aqueous			Solid/Soil		
		MS/MSD % Recovery	MS/MSD or LD % RPD	LCS% Recovery	MS/MSD % Recovery	MS/MSD or LD % RPD	LCS% Recovery
51-28-5	2,4-Dinitrophenol	10-168	99	10-146	10-149	99	15-131
121-14-2	2,4-Dinitrotoluene	31-131	32	47-131	10-171	45	48-111
606-20-2	2,6-Dinitrotoluene	58-127	82	59-125	45-124	99	61-121
117-84-0	Di-n-octyl phthalate	39-144	89	49-130	34-143	99	47-129
206-44-0	Fluoranthene	49-122	53	54-118	25-150	92	57-118
86-73-7	Fluorene	51-119	51	53-114	35-133	80	57-110
118-74-1	Hexachlorobenzene	48-123	51	54-114	45-123	74	57-111
87-68-3	Hexachlorobutadiene	35-118	56	36-113	43-126	86	56-113
77-47-4	Hexachlorocyclopentadiene	10-113	97	10-114	10-110	99	10-113
67-72-1	Hexachloroethane	31-118	92	29-115	36-134	97	61-110
193-39-5	Indeno(1,2,3-cd)pyrene	39-126	59	45-120	20-147	73	44-128
78-59-1	Isophorone	56-112	50	54-111	45-116	95	58-110
91-57-6	2-Methylnaphthalene	45-119	51	52-110	30-137	79	58-110
95-48-7	2-Methylphenol	42-113	73	50-110	41-116	99	51-110
91-20-3	Naphthalene	50-176	52	49-112	31-138	65	59-110
88-74-4	2-Nitroaniline	48-125	83	53-122	42-126	99	58-113
99-09-2	3-Nitroaniline	10-140	99	10-140	17-113	99	42-110
100-01-6	4-Nitroaniline	20-122	99	32-116	14-125	99	42-116
98-95-3	Nitrobenzene	56-125	81	56-119	49-120	99	62-110
88-75-5	2-Nitrophenol	51-131	77	46-129	44-125	99	55-118
100-02-7	4-Nitrophenol	10-145	34	19-144	10-148	64	22-128
86-30-6	N-Nitrosodiphenylamine	49-117	51	49-117	37-135	94	58-113
621-64-7	N-Nitrosodi-n-propylamine	18-115	36	30-115	12-128	50	38-110
87-86-5	Pentachlorophenol	10-140	56	10-140	10-144	87	10-123
85-01-8	Phenanthrene	52-117	51	53-112	24-145	81	56-110
108-95-2	Phenol	10-131	43	10-131	10-148	50	35-110
129-00-0	Pyrene	27-138	31	46-130	10-218	66	42-122
120-82-1	1,2,4-Trichlorobenzene	22-110	37	31-110	16-121	54	45-110
95-95-4	2,4,5-Trichlorophenol	45-125	74	46-122	39-123	99	52-115
88-06-2	2,4,6-Trichlorophenol	46-122	98	46-118	43-123	99	51-112
86-74-8	Carbazole	48-119	53	50-118	40-130	85	56-117
12674-11-2	Aroclor-1016	56-119	20	61-118	26-144	39	49-122
11096-82-5	Aroclor-1260	31-138	27	61-124	37-138	33	51-127

Table 1-3
MATRIX SPIKE AND LABORATORY CONTROL SAMPLE PRECISION AND ACCURACY OBJECTIVES

CAS#	Analyte Name	Aqueous			Solid/Soil		
		MS/MSD % Recovery	MS/MSD or LD % RPD	LCS% Recovery	MS/MSD % Recovery	MS/MSD or LD % RPD	LCS% Recovery
1-33-1	Total-TCDD	NA	NA	NA	NA	NA	NA
1746-01-6	2378-TCDD	60-140	30	60-140	60-140	30	60-140
1-33-2	Total-TCDF	NA	NA	NA	NA	NA	NA
51207-31-9	2378-TCDF	60-140	30	60-140	60-140	30	60-140
1-28-9	Total PeCDD	NA	NA	NA	NA	NA	NA
40321-76-4	12378-PeCDD	60-140	30	60-140	60-140	30	60-140
1-29-0	Total PeCDF	NA	NA	NA	NA	NA	NA
57117-41-6	123478-PeCDF	NA	NA	NA	NA	NA	NA
57117-31-4	123678-PeCDF	60-140	30	60-140	60-140	30	60-140
1-20-0	Total HeCDD	NA	NA	NA	NA	NA	NA
39227-28-6	123478-HeCDD	60-140	30	60-140	60-140	30	60-140
57653-85-7	123678-HeCDD	NA	NA	NA	NA	NA	NA
19408-74-3	123789-HeCDD	NA	NA	NA	NA	NA	NA
1-20-1	Total HeCDF	NA	NA	NA	NA	NA	NA
70648-26-9	123478-HeCDF	60-140	30	60-140	60-140	30	60-140
57117-44-9	123678-HeCDF	NA	NA	NA	NA	NA	NA
72918-21-9	123789-HeCDF	NA	NA	NA	NA	NA	NA
60851-34-5	234678-HeCDF	NA	NA	NA	NA	NA	NA
1-01-9	Total HpCDD	NA	NA	NA	NA	NA	NA
35822-46-9	1234678-HpCDD	60-140	30	60-140	60-140	30	60-140
1-02-0	Total HpCDF	NA	NA	NA	NA	NA	NA
67562-39-4	1234678-HpCDF	60-140	30	60-140	60-140	30	60-140
55673-89-7	11234789-HpCDF	NA	NA	NA	NA	NA	NA
3268-87-9	OCDD	60-140	30	60-140	60-140	30	60-140
39001-1-2	OCDF	60-140	30	60-140	60-140	30	60-140
7440-36-0	Antimony	75-125	20	80-120	75-125	20	80-120
7440-38-2	Arsenic	75-125	20	80-120	75-125	20	80-120
7440-39-3	Barium	75-125	20	80-120	75-125	20	80-120
7440-41-7	Beryllium	75-125	20	80-120	75-125	20	80-120
7440-43-9	Cadmium	75-125	20	80-120	75-125	20	80-120
7440-47-3	Chromium	75-125	20	80-120	75-125	20	80-120
7440-48-4	Cobalt	75-125	20	80-120	75-125	20	80-120
7440-50-8	Copper	75-125	20	80-120	75-125	20	80-120
7439-92-1	Lead	75-125	20	80-120	75-125	20	80-120

Table 1-3
MATRIX SPIKE AND LABORATORY CONTROL SAMPLE
PRECISION AND ACCURACY OBJECTIVES

CAS#	Analyte Name	Aqueous			Solid/Soil		
		MS/MSD % Recovery	MS/MSD or LD % RPD	LCS% Recovery	MS/MSD % Recovery	MS/MSD or LD % RPD	LCS% Recovery
7439-97-6	Mercury	53-135	20	70-118	10-209	20	52-127
7440-02-0	Nickel	75-125	20	80-120	75-125	20	80-120
7782-49-2	Selenium	75-125	20	80-120	75-125	20	80-120
7440-22-4	Silver	75-125	20	80-120	75-125	20	80-120
7440-28-0	Thallium	75-125	20	80-120	75-125	20	80-120
7440-31-5	Tin	75-125	20	80-120	75-125	20	80-120
7440-62-2	Vanadium	75-125	20	80-120	75-125	20	80-120
7440-66-6	Zinc	75-125	20	80-120	75-125	20	80-120
7429-90-5	Aluminum	75-125	20	80-120	75-125	20	80-120
7440-70-2	Calcium	75-125	20	80-120	75-125	20	80-120
7439-89-6	Iron	75-125	20	80-120	75-125	20	80-120
7439-95-4	Magnesium	75-125	20	80-120	75-125	20	80-120
7439-96-5	Manganese	75-125	20	80-120	75-125	20	80-120
7440-09-7	Potassium	75-125	20	80-120	75-125	20	80-120
7440-23-5	Sodium	75-125	20	80-120	75-125	20	80-120

NOTES:
(1) Fractions: VOA - Volatile Organic Analytes; DAI - Direct Aqueous Injection; SV - Semivolatile Organics; OCP - Organochlorine Pesticides
OP - Organophosphorus Pesticides; H - Herbicides; DIOX/F - Dioxins/Furans; M - Metals; WC - Wet Chemistry; RAD - Radiological
(2) Fictitious CAS numbers created to represent the co-eluting isomers 3-methylphenol and 4-methylphenol.
(3) SVOC limits were rounded to whole numbers to reflect the accuracy of the laboratory (5/5/01).
TBD - PQL to be determined
SW-846 - "Test Methods for Evaluating Solid Waste, Physical Chemical Methods," third edition.
EPA - "Methods for Chemical Analysis of Water and Wastes," EPA 600-4/79-020.

Table 1-4
Crosswalk for Information Required for the QAPP Located in Other Documents

REQUIRED EPA-NE QAPP ELEMENTS and CORRESPONDING EPA-NE QAPP SECTIONS	INFORMATION FOUND IN OTHER DOCUMENT	REFERENCED DOCUMENT	LOCATION OF INFORMATION IN REFERENCED DOCUMENT
Project Management and Objectives			
1.0 Title and Approval Page	None	NA	NA
2.0 Table of Contents and Document Format 2.1 Table of Contents 2.2 Document Control Format 2.3 Document Control Numbering System 2.4 EPA-NE QAPP Worksheet #2	None	NA	NA
3.0 Distribution List and Project Personnel Sign-off Sheet	None	NA	NA
4.0 Project Organization 4.1 Project Organizational Chart 4.2 Communication Pathways 4.2.1 Modifications to Approved QAPP 4.3 Personnel Responsibilities and Qualifications 4.4 Special Training Requirements/ Certification	4.3 Roles and Responsibilities (LEA)	FSP	Appendix C of IWP (entire Appendix)
5.0 Project Planning/Project Definition 5.1 Project Planning Meetings 5.2 Problem Definition/Site History and Background	None	NA	NA
6.0 Project Description and Schedule 6.1 Project Overview 6.2 Project Schedule	6.2 Project Schedule	IWP	Section 14

NOTES:
FSP = Field Sampling Plan
IWP = Implementation Work Plan
HASP = Site-Specific Health and Safety Plan

Table 1-4
Crosswalk for Information Required for the QAPP Located in Other Documents

REQUIRED EPA-NE QAPP ELEMENTS and CORRESPONDING EPA-NE QAPP SECTIONS	INFORMATION FOUND IN OTHER DOCUMENT	REFERENCED DOCUMENT	LOCATION OF INFORMATION IN REFERENCED DOCUMENT
7.0 Project Quality Objectives and Measurement Performance Criteria 7.1 Project Quality Objectives 7.2 Measurement Performance Criteria	7.2 Analytical Methods/Field QC 7.2 Rationale for sample quantities and locations 7.2.1 SOP for Immunoassay Screening 7.2.1.3 SOP for Immunoassay Screening 7.2.2.2 Number of Confirmatory Soil Samples 7.2.2.3 QA/QC Samples Associated with Confirmatory Sampling 7.2.2.4 Location, Number, and Type of Analysis o Confirmatory Samples 7.3.3 SOP for Immunoassay Screening 7.3.5 Laboratory Methods for Disposal Characterization	FSP FSP IWP IWP FSP FSP FSP IWP FSP	Tables 3-1, 3-2, 3-3 Appendix C of IWP (entire Appendix) Appendix G Appendix G Table 3-1 Table 3-3 Section 3.3 Appendix G Tables 3-1, 3-2
Measurement/Data Acquisition			
8.0 Sampling Process Design 8.1 Sampling Design Rationale	8.1 Sampling Methodologies and Procedures 8.1 Anticipated Number of Samples Collected in Action Areas and Historical Concentrations 8.1.1 Sample Locations for Delineation Sampling 8.1.1 Number of Samples Collected in Each Action Area	FSP FSP FSP FSP	Appendix C of IWP (entire Appendix) Table 1-1 Figures 1-1 through 1-12 Table 1-1

NOTES:
FSP = Field Sampling Plan
IWP = Implementation Work Plan
HASP = Site-Specific Health and Safety Plan

Table 1-4
Crosswalk for Information Required for the QAPP Located in Other Documents

REQUIRED EPA-NE QAPP ELEMENTS and CORRESPONDING EPA-NE QAPP SECTIONS	INFORMATION FOUND IN OTHER DOCUMENT	REFERENCED DOCUMENT	LOCATION OF INFORMATION IN REFERENCED DOCUMENT
9.0 Sampling Procedures and Requirements 9.1 Sampling Procedures 9.2 Sampling SOP Modifications 9.3 Cleaning and Decontamination of Equipment/Sample Containers 9.4 Field Equipment Calibration 9.5 Field Equipment Maintenance, Testing and Inspection Requirements 9.6 Inspection and Acceptance Requirements for Supplies/Sample Containers	9.1 Sampling SOPs 9.1.1.1 Sample Containers 9.1.1.2 Preservation Requirements 9.1.1.3 Sample Holding Times 9.4 Field Equipment Calibration Specifications	IWP FSP FSP FSP HASP	Appendix G Table 3-4 Table 3-4 Table 3.4 Section 5.4
10.0 Sample Handling, Tracking and Custody Requirements 10.1 Sample Collection Documentation 10.1.1 Field Notes 10.1.2 Field Documentation Management System 10.2 Sample Handling and Tracking System 10.3 Sample Custody	10.2 Sample Location Identification System 10.3 Chain-of-Custody Forms 10.3.3 Chain of Custody Forms, Custody Seals	IWP FSP FSP	Section 5.2 Figures 3-1a, 3-1b Figures 3-1 through 3-4

NOTES:
FSP = Field Sampling Plan
IWP = Implementation Work Plan
HASP = Site-Specific Health and Safety Plan

Table 1-4
Crosswalk for Information Required for the QAPP Located in Other Documents

REQUIRED EPA-NE QAPP ELEMENTS and CORRESPONDING EPA-NE QAPP SECTIONS	INFORMATION FOUND IN OTHER DOCUMENT	REFERENCED DOCUMENT	LOCATION OF INFORMATION IN REFERENCED DOCUMENT
11.0 Field Analytical Method Requirements 11.1 Field Analytical Methods and SOPs 11.2 Field Analytical Method/SOP Modifications 11.3 Field Analytical Instrument Calibration 11.4 Field Analytical Instrument/ Equipment Maintenance, Testing and Inspection Requirements 11.5 Field Analytical Inspection and Acceptance Requirements for Supplies	11.1 Dioxin Immunoassay Screening SOP 11.2.1 Chain of Custody Forms, Sample Labels, Custody Seals 11.3 Dioxin Immunoassay Screening SOP	IWP FSP IWP	Appendix G Figures 3-1, 3-2, 3-3 Appendix G
12.0 Fixed Laboratory Analytical Method Requirements 12.1 Fixed Laboratory Analytical Methods and SOPs 12.2 Fixed Laboratory Analytical Method/SOP Modifications 12.3 Fixed Laboratory Instrument Calibration 12.4 Fixed Laboratory Instrument/ Equipment Maintenance, Testing and Inspection Requirements 12.5 Fixed Laboratory Inspection and Acceptance Requirements for Supplies	12.1 Constituents of Concern and Associated Analytical and Extraction Methods 12.3 Identification of Calibration Requirements Method Reference Documents	FSP FSP	Tables 3-1, 3-2 Tables 3-1, 3-2
13.0 Quality Control Requirements 13.1 Sampling Quality Control 13.2 Analytical Quality Control 13.2.1 Field Analytical QC 13.2.2 Fixed Laboratory QC	13.2.2 Estimated Number of MS/MSD Analyses 13.3.3 EPA Method Used for Surrogate Compound Selection 13.2.4 EPA Method Used for Calibration Standard Selection 13.2.5 EPA Method Used for Internal Standard Performance	FSP FSP FSP FSP	Table 3-3 Table 3-1 Table 3-1 Table 3-1
14.0 Data Acquisition Requirements	None	NA	NA

NOTES:
FSP = Field Sampling Plan
IWP = Implementation Work Plan
HASP = Site-Specific Health and Safety Plan

Table 1-4
Crosswalk for Information Required for the QAPP Located in Other Documents

REQUIRED EPA-NE QAPP ELEMENTS and CORRESPONDING EPA-NE QAPP SECTIONS	INFORMATION FOUND IN OTHER DOCUMENT	REFERENCED DOCUMENT	LOCATION OF INFORMATION IN REFERENCED DOCUMENT
15.0 Documentation, Records and Data Management 15.1 Project Documentation and Records 15.2 Field Analysis Data Package Deliverables 15.3 Fixed Laboratory Data Package Deliverables 15.4 Data Reporting Formats 15.5 Data Handling and Management 15.6 Data Tracking and Control	15.7 Chain-of-Custody Forms, Sample Labels, Custody Seals	FSP	Figures 3-1 though 3-4
16.0 Assessments and Response Actions 16.1 Planned Assessments 16.2 Assessment Findings and Corrective Action Responses 16.3 Additional QAPP Non-Conformances	None	NA	NA
17.0 QA Management Reports	None	NA	NA
Data Validation and Usability			
18.0 Verification and Validation Requirements	None	NA	NA
19.0 Verification and Validation Procedures	None	NA	NA
20.0 Data Usability/Reconciliation with Project Quality Objectives	None	NA	NA

NOTES:
FSP = Field Sampling Plan
IWP = Implementation Work Plan
HASP = Site-Specific Health and Safety Plan

ATTACHMENTS

ATTACHMENT A

Referenced QAPP Worksheets

EPA-NE QAPP Worksheet #3 - Rev. 10/99
List people who will receive approved QAPP,
QAPP revisions, addenda and/or amendments.
(Refer to *QAPP Manual* Section 3.0 for guidance.)

Distribution List

QAPP Recipients	Title	Organization	Telephone Number	Document Control Number
Anna Krasko	Work Assignment Manager	US EPA-NE	(617) 918-1232	
Andy Beliveau	QA Reviewer/Lead Chemist	US EPA-NE	(617) 918-8607	
Sarah Martino	Engineer	RIDEM Office of Waste Management	(401) 222-2797 x7149	
Laureen Borochaner	Structural Engineer, Design Branch	USACE	(978) 318 8802	
Jeffrey J. Loureiro	President	Loureiro Engineering Associates, Inc.	(860) 747-6181	
Scott Miller	Project Manager	Loureiro Engineering Associates, Inc.	(860) 747-6181	
Nick Skoularikis	Director of Quality	Loureiro Engineering Associates, Inc.	(860) 747-6181	
Swidler Berlin Shereff Friedman, LLP	Attorneys for Centredale Manor Performing Parties Group	Swidler Berlin Shereff Friedman, LLP	(202) 298-9200	
Kevin Woodcock	Dioxin Project Manager	Severn Trent Laboratory, Inc.	_____	

EPA-NE QAPP Worksheet #4 - Rev. 10/99

Copies of this form must be signed by project personnel from each organization to indicate that they have read the QAPP and will implement the QAPP as prescribed. Each organization must keep the original signed ASheets@ in their organization=s project file and forward copies of the signed ASheets@ to the Lead Organization. (Refer to *QAPP Manual* Section 3.0 for guidance.)

Project Personnel Sign-Off Sheet

Organization:

Project Personnel	Title	Telephone Number	Signature	Date QAPP Read	QAPP Acceptable as Written

EPA-NE QAPP Worksheet #5a - Rev. 10/99
Use this worksheet to identify reporting relationships between Lead Organization and other organizations, including contractors and subcontractors. Provide a detailed organizational chart and include the name and phone number of each organization and the Project Manager, Case Team members, and/or Project Contacts for each organization in Section 4.1 of the QAPP document. (Refer to *QAPP Manual* Section 4.1 for guidance.)

Organizational Chart

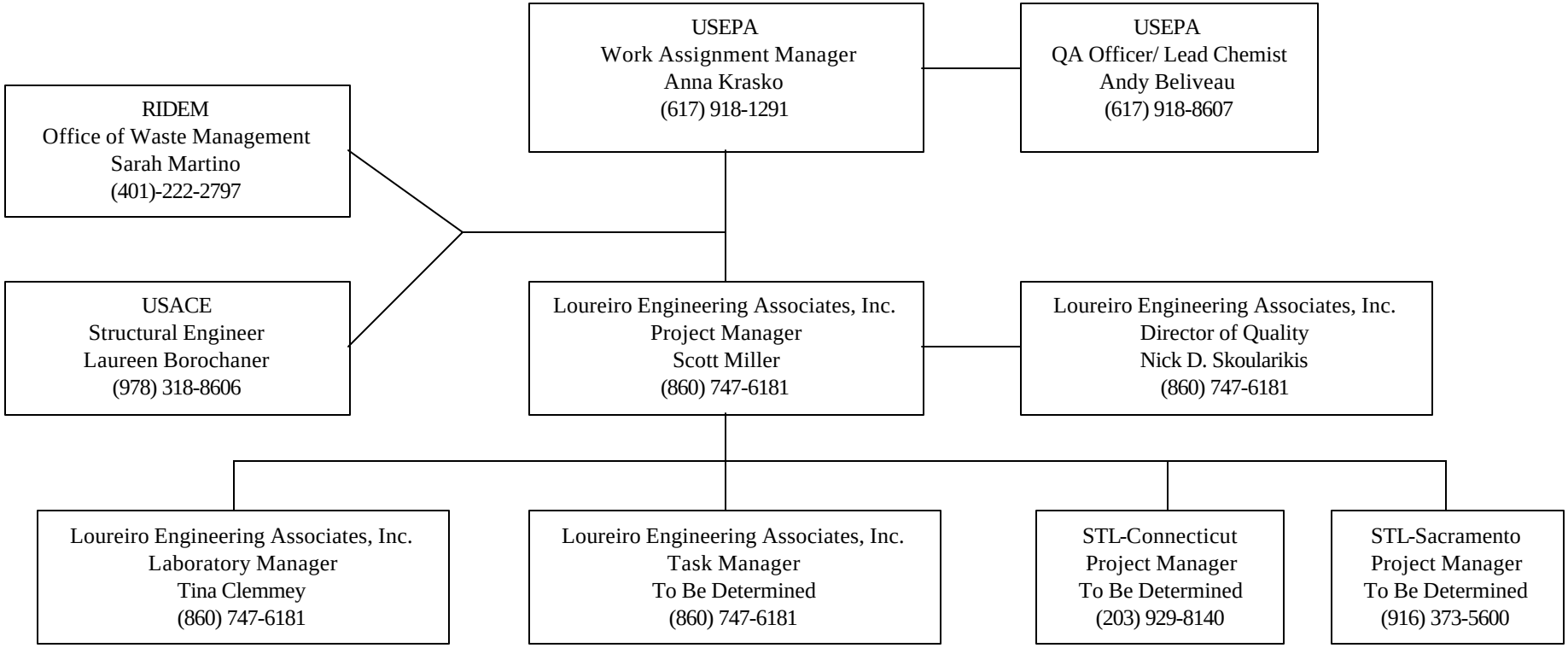

EPA-NE QAPP Worksheet #7 - Rev. 10/99
Provide the following information for those projects requiring specialized training. Attach training records and/or certificates to this worksheet. (Refer to *QAPP Manual* Section 4.4 for guidance.)

Special Personnel Training Requirements Table

Project Function	Specialized Training Title of Course or Description	Training Provided By	Training Date	Personnel/Groups Receiving Training	Personnel Titles/ Organizational Affiliation	Location of Training Records/Certificates*
Dioxin Immunoassay Analysis	CAPE Technologies 2 day training course for EPA Draft Method 4025 (Analysis of Dioxin in Soil by Enzyme Immunoassay)	Robert O. Harrison, Ph.D. CAPE Technologies	June 18-19, 2001	Jeff Berdeen	Scientist/LEA	Attached
Dioxin Immunoassay Analysis	CAPE Technologies 2 day training course for EPA Draft Method 4025 (Analysis of Dioxin in Soil by Enzyme Immunoassay)	Robert O. Harrison, Ph.D. CAPE Technologies	June 18-19, 2001	Tina Clemmey	Laboratory Manager/Data Validation Manager/LEA	Attached
Dioxin Immunoassay Analysis	CAPE Technologies 2 day training course for EPA Draft Method 4025 (Analysis of Dioxin in Soil by Enzyme Immunoassay)	Robert O. Harrison, Ph.D. CAPE Technologies	June 18-19, 2001	Sara Doncet	Senior Chemist/LEA	Attached

*If training records and/or certificates are on file elsewhere, then document their location in this column. If training records and/or certificates do not exist or are not available, then this should be noted.

CAPE Technologies

Training Certification

This certificate is awarded to: *Jeff Berdeen*

of: *Loureiro Engineering Associates*

on: *June 19, 2001*

for completion of the CAPE Technologies 2 day training course for EPA Draft Method 4025 (Analysis of Dioxin in Soil by Enzyme Immunoassay).

Training conducted by: *Robert O. Harrison*

Robert O. Harrison, Ph.D.
President
CAPE Technologies

3 Adams Street, South Portland ME 04106 email: cape-tech@ceemaine.org
phone: 207-741-2995 fax: 207-741-2996 web site: www.cape-tech.com

CAPE Technologies

Training Certification

This certificate is awarded to: *Sara Doncet*

of: *Loureiro Engineering Associates*

on: *June 19, 2001*

for completion of the CAPE Technologies 2 day training course for EPA Draft Method 4025 (Analysis of Dioxin in Soil by Enzyme Immunoassay).

Training conducted by: *Robert O. Harrison*

Robert O. Harrison, Ph.D.
President
CAPE Technologies

3 Adams Street, South Portland ME 04106 email: cape-tech@ceemaine.org
phone: 207-741-2995 fax: 207-741-2996 web site: www.cape-tech.com

CAPE Technologies

Training Certification

This certificate is awarded to: *Tina Clemmey*

of: *Loureiro Engineering Associates*

on: *June 19, 2001*

for completion of the CAPE Technologies 2 day training course for EPA Draft Method 4025 (Analysis of Dioxin in Soil by Enzyme Immunoassay).

Training conducted by: *Robert O. Harrison*

Robert O. Harrison, Ph.D.
President
CAPE Technologies

3 Adams Street, South Portland ME 04106 email: cape-tech@ceemaine.org
phone: 207-741-2995 fax: 207-741-2996 web site: www.cape-tech.com

ATTACHMENT B

Dioxin/Furan Immuno Assay Test Kit Correlation Study

UNITED STATES ENVIRONMENTAL PROTECTION AGENCY
REGION I
60 WESTVIEW STREET, LEXINGTON, MA 02421

Memorandum

Centredale Manor
2.3
8452

Date: **August 2, 2000**

Subj: **Dioxin/Furan Immuno Assay Test Kit Correlation Study**

From: **Scott Clifford**
Chemist

Thru: **Andy Beliveau, Rob Maxfield**

To: **Anna Krasco, HBO**

Introduction:

On May 15 - May 23, 2000, a study to compare high resolution gas chromatography - high resolution mass spectrometry dioxin/furan analytical results to enzyme immunoassay test kit dioxin/furan screening results was conducted in the NERL Mobile Laboratory on a set of dioxin laden soils/sediments from the Centredale Manor site in Providence, RI.

The objective of this correlation study was to determine if the CAPE Technology Enzyme Immunoassay Test Kits are a viable option for generating quick turn-around, quality screening data for future investigations at the Centredale Manor site, and possibly other dioxin contaminated sites. A secondary purpose of the study was to use the exercise to train NERL in the use of the CAPE test kit.

A total of forty-six soil and sediment samples were screened using CAPE Technologies High Performance Dioxin/Furan Immunoassay Kit, which is an Enzyme Immunoassay (EIA) for analysis of Polychlorinated Dibenzo Dioxins and Polychlorinated Dibenzofurans (PCDD/Fs) in prepared sample extracts. EIA screening results were compared to EPA Method 8290A (Polychlorinated Dibenzodioxins and Polychlorinated Dibenzofurans by High-Resolution Gas Chromatography/High-Resolution Mass Spectrometry) results generated by one of two commercial laboratories (Quanterra or Triangle Laboratories).

PCDD/DFs are a family of compounds with the same general structure. There are 75 dibenzodioxin congeners and 135 dibenzofuran congeners, containing from 1 to 8 chlorine atoms on the dibenzodioxin or dibenzofuran nucleus. Only 7 of the 75 PCDD congeners and 10 of the 135 PCDF congeners contain the 2,3,7,8 chlorination pattern thought to be required for dioxin-like toxicity. Only these 17 of the 210 total PCDD/F congeners contribute to the Toxic Equivalency (TEQ) of a sample, which is generally the critical analytical target. Based on a variety of toxicity tests, these 17 congeners have been assigned Toxic Equivalency Factors (TEFs) of 1.0 to 0.0001 relative to 2,3,7,8-tetrachlorodibenzo-p-dioxin.

Methodology:

For this study, the CAPE Technologies EIA Test Kits (see method reference below) were used to determine if a sample contained PCDD/Fs above or below a 500 part per trillion (ppt) Toxic Equivalency (TEQ). The EIA results were compared to EPA reference Method 8290A (8290A). Soil and sediment samples for the comparison study were selected from the large number available from prior work at Centerdale. An attempt was made to insure that the majority of samples selected had PCDD/DF concentrations of approximately 1 part per billion (ppb). All samples were taken from archived material that had previously been analyzed using 8290A by one of the two contract laboratories used in the Centerdale investigation of 1998-99.

EIA assay samples were weighed out, dried with sodium sulfate and extracted using dimethyl formamide (DMF). A portion of sample extract was then added to hexane and oxidized with fuming H_2S04. A final solvent exchange from hexane to methanol was followed by an immunoassay incubation procedure. Samples were analyzed in four groups, generating four data sets (one per each immunoassay procedure) of EIA data.

Results:

Four separate groups of soil/sediment samples were extracted, oxidized and analyzed using EIA. Tables I-4 show the correlation between the immunoassay screening analysis and TEQ as determined by 8290A, in of each of the fours sample sets.

In the Tables EIA results are reported as: CP = confirmed positive (>500ppt), CN = confirmed negative (<500 ppt), FP = false positive (>500ppt when 8290A results were reported as <500ppt), and FN = false negative (<500 ppt when 8290A results were reported as >500ppt).

Table 1

Sample Set 1 Correlation

Sample #	ppt TEQ by EPA Method 8290A	EIA Results
D00867	956	CP
D00984	729	CP
D01033	2280	CP
D01425	325	FP
D00992	530	CP
D00982	3340	CP
D00852	323	CN
D00852 Assay Dup	323	FP
CMS237B	1200	CP
CMS237B Assay Dup	1200	CP

Table 2

Sample Set 2 Correlation

Sample #	ppt TEQ by EPA Method 8290A	EIA Results
D01065	508	CP
D01398	169	FP
D01055	1380	CP
D01069	3260	CP
CMS423D	120	CN
CMS237A	7100	CP
D00993	792	CP
D01448	534	CP
D01448 Assay Dup	534	CP
CMS417A	2700	CP
D00863	2.9	CN
D00863 Lab Dup	2.9	CN
D00983 Lab Dup	3160	CP

Table 3

Sample Set 3 Correlation

Sample #	ppt TEQ by EPA Method 8290A	EIA Results
D00983	3160	CP
CMS025A	33000	CP
D01093	1500	FN
D01429	418	FP
D01468	148	CN
D00995	531	FN
D00870	118	CN
D00862	176	CN
D01070	3090	CP
D00861	120	CN
D01057	2380	CP
D01159	7.6	CN
D01422	388	CN
CMS417C	1900	CP
CMS417C Assay Dup	1900	CP
D01062	591	FN
D01062 Assay Dup	591	FN

Table 4

Sample Set 4 Correlation

Sample #	ppt TEQ by EPA Method 8290A	EIA Results
CMS024B	75000	CP
D00849	1050	CP
D00981	2070	CP
D01141	237	CN
D01033	2280	CP
CMS025B	350	FP
CMS417A Lab Dup	2700	FN
D01403	1110	CP
D01139	6800	CP
CMS237C	350	CN
D00864	982	CP

Table 4 (cont'd)

Sample #	ppt TEQ by EPA Method 8290A	EIA Results
D00866	2960	CP
CMS417B	1400	CP
CMS417B Assay Dup	1400	CP
D01052	4250	CP
D01052 Assay Dup	4250	CP

Result Summary:

Fifty-six actual immunoassay assays were performed on the fourty-six field samples. The 10 replicate analyses included lab duplicates (taking a duplicate sample completely through the analysis scheme) and assay duplicates (taking a duplicate of the final prepared extract through the final stage [immunoassay step] of the analysis). In summarizing the results of the fifty-six assays performed we had:

34 Confirmed Positives
12 Confirmed Negatives
5 False Positives
5 False Negatives

In evaluating a real scenario situation for these forty-six samples, where if a sample was positive and a duplicate was negative, the worst case result would be chosen, we had:

28 Confirmed Positives
10 Confirmed Negatives
5 False Positives
3 False Negatives

Table 5 summarizes the false positive and false negative results from the complete set of assays performed.

Table 5

False Positive and False Negative Correlations

Sample #	ppt TEQ by EPA Method 8290A	EIA Results
D01398	169	FP*
D00852 Assay Dup	323	FP@
D01425	325	FP@
CMS025B	350	FP@
D01429	418	FP@
D00995	531	FN@
D01062	591	FN@
D01062 Assay Dup	591	FN@
D01093	1500	FN*
CMS417A Lab Dup	2700	FN*

*Lack of correlation between methods and outside of 8290A RPD range
@Lack of correlation between methods but within 8290A RPD range

Discussion:

There are several confounding factors that must be considered when interpreting this inter-method comparison data:

- The field precision of the 8290A PCDD/DF analyses in Centerdale soils averaged 41% and ranged from near 0 to well over 100 percent for field replicates

- The actual percent(%) moisture was not determined during the EIA analytical episode. Percent moisture of the sample was assumed based upon data provided by the contract laboratories that performed the 8290A analyses. Actual sample moisture content at the time of EIA screening might have been different if the samples lost or gained moisture in storage between analyses.

If the observed 41% average RPD between 8290A field duplicates is factored into the above correlation, then, for example, the 531 ppt result for D00995 could range from 313 ppt to 749 ppt. Therefore the EIA negative result (<500ppt) may in fact be correct and the observed difference between the EIA and 8290A assays may simply be the result the imprecision of the 8290A measurements.

The observed average 41% RPD for 8290A data could not however fully explain the false negative at 1500 and 2700 ppt nor false positive at 169 ppt. Several replicate pairs for the 8290A work exceeded 100% RPD suggesting that even these contradictions might be largely attributable to the imprecision of the 8290A measurement. The observed RPD between field duplicates represents a combined measure of the homogeneity of the sample as well as inherent acceptable error in two different methods

The possibility of error due to using the incorrect % solids may also enter into the interpretation for the relatively close comparisons but this effect cannot be quantitated.

All of the above confounding factors must enter into the interpretation of this data set. Using the RPD factor alone could account for 7 out of the 10 observed contradictory results. The actual comparability of the methods could be further clarified with additional field duplicates and more comparison analyses, however this study has demonstrated the suitability of EIA for field screening at the 500 ppt level.

In summary:

The CAPE Technologies EIA Test Kits can generate data that compares favorably with EPA Method 8290A. For future work the comparability of the data will be enhanced by 1.) having a fully proficient analyst (this study was, in part, a training exercise) , 2.) carefully homogenizing soil and sediment samples before analyses - to reduce sample homogeneity errors, 3.) performing percent moisture analysis at the time of sample preparation for each sample, 4.) developing a confirmatory analysis plan for a small percentage of field screened samples.

Using EIA it is estimated that 60-80 samples could be analyzed per week by a single experienced analyst. This would offer the investigator high quality, quick turn-around screening data for 15-20 samples per day with near real time information at roughly 10% of the cost of a full EPA Method 8290A analysis.

In this study, the correlation between the CAPE Technologies Immunoassay kit and the full protocol EPA Method 8290A looks good and quite acceptable for a field screening methodology. In the real life scenario, approximately 83% of the samples were assayed correctly, 11% of the results were false positives and 6% of the results were false negatives. When the mitigating factors listed above are considered the overall performance of EIA seems exceptionally good.

Reference

Cape Technologies High Performance Dioxin/Furan Immunoassay Kit, DF1 Kit Insert (IN-DF1), page 1, 2/2/00.

APPENDIX E

Soil and Sediment Removal Specifications

SOIL AND SEDIMENT REMOVAL SPECIFICATIONS
CENTREDALE MANOR RESTORATION SUPERFUND SITE
NORTH PROVIDENCE, RHODE ISLAND

July 9, 2001

Prepared for

CENTREDALE MANOR PERFORMING PARTIES GROUP
c/o Swidler Berlin Shereff Friedman LLP
3000 K Street, NW Suite 300
Washington, DC. 20007

Prepared by:

LOUREIRO ENGINEERING ASSOCIATES, INC.
100 Northwest Drive
Plainville, Connecticut 06062

LEA Comm. No. 15RP101

Table of Contents

DIVISION 1 GENERAL REQUIREMENTS

Section Number	Title
01010	Summary of Work
01025	Field Engineering
01120	Decontamination
01200	Coordination and Meetings
01330	Submittal Procedures
01500	Remedial Action Facilities and Temporary Controls
01560	Safety and Environmental Controls

DIVISION 2 SITE CONSTRUCTION

Section Number	Title
02050	Removals
02110	Clearing and Grubbing
02140	Dewatering
02220	Earthwork
02272	Soil Erosion and Sediment Controls
02900	Landscaping

FIGURES

Figure 1 Soil Erosion and Sediment Controls

Section 01010

Summary of Work

PART 1 GENERAL

This project consists of excavating impacted soil from within proposed action areas associated with the Centredale Manor Restoration Superfund Site in North Providence, Rhode Island.. The soil in the action areas will be excavated from previously identified limits and transported off-site for disposal at the Bennett Environmental Inc. facility in St. Ambroise, Quebec.

1.1 WORK BY CONTRACTOR

The Contractor shall provide all labor, equipment, and materials to complete the work as described in this Specification and as generally summarized below.

Clearing

Clear all brush and trees from the limits of the proposed excavations and the perimeter of Allendale Pond in areas to be inundated with the restored water level. Remove all adjacent structures (i.e., chain link fences, concrete slabs, etc.) as required to progress with the work. Dispose of all materials in accordance with the requirements identified in the Implementation Work Plan.

Soil Erosion and Sediment Controls

Provide and install soil erosion and sediment controls around the perimeter of the proposed excavations in accordance with the Rhode Island Soil Erosion and Sediment Control Handbook. Maintain all soil erosion and sediment controls as required throughout the duration of the project. Add additional controls as necessary and/or as directed by the EPA, RIDEM or USACE.

Office, Sanitary, and Personnel Decontamination Facilities

Furnish and install a field office trailer, storage areas, personnel decontamination facilities and sanitary facilities for all employees, subcontractors, EPA, RIDEM and USACE representatives.

Temporary Equipment Decontamination Pad

Furnish and install temporary equipment decontamination pads, as necessary, complete with rinsate collection, handling facilities and storage containers.

Excavation

Excavate contaminated soil to the limits determined by field and laboratory analysis. Stabilize soil containing free liquids prior to loading material from the excavation into roll-off containers. Transport excavated material off-site for disposal at Bennett Environmental Inc. incinerator in St. Ambroise, Quebec. Weigh all transported material on a certified scale provided at the disposal facility and submit weigh tickets. Decontaminate all trucks leaving the excavation site if they have contacted any impacted material.

Dewatering

Dewatering activities may be required in the proposed action areas associated with Allendale Pond and will be required for the proposed action areas associated with Lymansville Pond. Dewater each area as required to remove soil and sediment to the limits provided. Dewatering wastewaters from within the temporary cofferdams installed for action areas associated with Lymansville Pond will be pumped back over the cofferdam. Cofferdams will be constructed sufficiently to prevent water from entering the excavation area through the cofferdam to the maximum extent prudent.

Waste Disposal

Transport and dispose of all wastes generated at the Site in accordance with the requirements identified in the Implementation Work Plan. Excavated soil and sediment requiring off-site disposal will be containerized at each action area and stored on-site in the containment area prior to transport from the Site. Materials requiring recycling will be transported to a local facility. General trash will be removed from the Site and disposed at a local landfill.

Backfill

Backfill material shall be provided from off-site sources. No compaction requirements are required. Backfill will consist of bank run gravel and topsoil to be restored to the grades existing prior to construction activities.

Final Restorations

For previously-vegetated areas, provide topsoil and final grading as required to match the lines and grades of the proposed contours unless otherwise approved or directed by the EPA or RIDEM. Soil erosion and sediment controls shall be removed as soon as a suitable stand of grass has been established.

PART 2 PRODUCTS

Not Used

PART 3 EXECUTION

Not Used

Section 01025

Field Engineering

PART 1 GENERAL

1.1 SCOPE

The work of this Section includes, but is not limited to, the establishment and maintenance of survey control points, lines, and levels.

1.2 GRADES, LINES, AND LEVELS

Vertical control points (benchmarks), baselines, and horizontal control points and/or coordinate system will be established by a professional survey licensed in the State of Rhode Island. The Contractor shall locate all excavation limits, using these points, lines, levels, control points, and baselines as necessary to perform the work in accordance with the Specifications and the Implementation Work Plan.

1.3 FIELD RECORDS

The Contractor shall maintain records of all field survey work and mark up and maintain site drawings with salient features of the work as it is performed, including locations of control points, temporary works, access roads, ramps, excavated areas, and boundaries of zoned areas. Record drawings shall be prepared by the Contractor and stamped by a land surveyor licensed by the State of Rhode Island at the completion of the project.

1.4 EXISTING TOPOGRAPHY

The actual existing surface elevations will be found to have minor deviations from the contours shown on the Drawings included in the Implementation Work Plan. This shall be verified by the Contractor before work is started.

1.5 SURVEY AND MEASUREMENT DATA

Survey and measurement data shall be obtained in accordance with the following requirements.

1) Accuracy

Optical survey, tape measurements, and electronic measurements: Minimum accuracy of ±0.01 feet in horizontal location and ±0.01 feet in elevation.

2) Tolerances

The Contractor shall excavate and place all fill, topsoil, and all other materials to the lines, grades, slopes, and thickness of existing elevations within a tolerance of ±0.08 feet.

Horizontal and vertical control points will be established and provided by the Engineer around the site prior to construction. The Contractor shall be responsible for protecting these points during construction.

1.6 FIELD ENGINEERING

The exact location of the bench marks to be used as control datum will be identified as part of the preconstruction meeting.

Verify and confirm existing conditions, drawing dimensions, and elevations as required to complete the work.

Provide field engineering services. Establish elevations, lines, and levels utilizing recognized engineering survey practices.

1.7 EXAMINATION

Examine and verify that existing site conditions and surfaces are as indicated on the Drawings and are acceptable for subsequent work.

Examine and verify specific conditions described in individual Specification Sections.

PART 2 PRODUCTS

Not Used

PART 3 EXECUTION

Not Used

-- End of Section --

Section 01120

Decontamination

PART 1 GENERAL

1.1 SCOPE

The work of this Section includes, but is not limited to, decontamination pad construction and decontamination procedures for equipment and materials. Decontamination procedures for personnel shall be covered by the Contractor's Health and Safety Plan (HASP).

1.2 GENERAL REQUIREMENTS

Equipment decontamination shall be conducted in the Exclusion Zone to the maximum extent prudent. All recoverable equipment and materials shall be decontaminated after leaving the Exclusion Zone (EZ) and prior to coming in contact with “clean” soil.

Decontamination of equipment shall take place on an equipment decontamination pad and shall consist of degreasing (if required) followed by dry decontamination and water and/or steam cleaning supplemented by detergents or solvents as appropriate. Special attention shall be paid to removal of material on and within the undercarriage, tires, and axles of trucks and rubber-tired equipment. Equipment decontamination process shall be approved by the engineer.

Decontamination of temporary facilities located within the contaminant reduction zone shall be limited to exterior cleaning prior to removal from the site.

Tools and items for which decontamination is difficult or impossible to verify shall remain on the site, until completion of the work, for subsequent packaging and disposal by the Contractor. (Examples of such equipment or materials are wire, rope, lumber, personnel protective equipment and apparel.)

1.3 EQUIPMENT DECONTAMINATION PAD

Design and Construction

1) The Contractor shall be responsible for the design of the equipment decontamination pad which shall meet the following criteria:

    a. Dimensions adequate to contain wash water and debris from the largest sized vehicles.

b. Perimeter to be curbed and provided with splash guards.
c. Impervious membrane required to prevent seepage into the ground.
d. Sumps, pumping facilities, and temporary storage facilities to be adequate for anticipated use.

PART 2 PRODUCTS

Not Used

PART 3 EXECUTION

3.1 INSTALLATION OF DECONTAMINATION PAD

Installation of the decontamination pad shall be completed in accordance with the Contractor's design and construction methods.

3.2 OPERATION AND CLOSURE OF DECONTAMINATION PAD

During activity periods, a temporary decontamination pad will be constructed in the exclusion zone in the event that equipment washing will be required in the action area.

Decontamination water shall be placed into the roll-off container containing excavated soil and disposed off-site in accordance with the Implementation Work Plan requirements. Sediment collected in the decontamination pad and the liner system used to contain the wastewater will be placed into the roll-off container generated at each proposed action area for off-site disposal.

3.3 DISPOSAL OF DECONTAMINATION WATER

Decontamination water shall be collected by the Contractor and placed into the roll-off container containing the excavated material from the proposed action area and disposed off-site in accordance with the Implementation Work Plan requirements.

-- End of Section --

Section 01200

Coordination and Meetings

PART 1 GENERAL

1.1 SCOPE

The work of this Section includes, but is not limited to, coordination, preconstruction meeting, and progress meetings.

1.2 COORDINATION

Coordinate scheduling, submittals, and work to assure efficient and orderly sequence of interdependent project elements to be done by United (including sampling and analysis) and to be done by others (i.e., Engineer).

1.3 PRECONSTRUCTION MEETING

Attendance Required: EPA, RIDEM, USACE, LEA, LCI, and any Subcontractors.

Agenda:

a. Introduction.

b. Site access, security and procedures.

c. Project schedule.

d. Work hours.

e. Procedures and processing of field decisions, submittals, requests for information, and Change Orders.

f. Project meetings.

g. Construction facilities and controls.

h. Health and safety issues.

i. Decontamination requirements.

j. Contractor quality control measures.

k. Spill control requirements.

l. Environmental protection.

m. Housekeeping procedures.

n. Procedures for handling, storage and disposal of materials from the Site.

o. Procedures for maintaining record documents.

Record minutes and distribute copies within two days after meeting to Engineer, United, participants, and those affected by decisions made.

1.4 PROGRESS MEETINGS

Progress meetings will be performed in accordance with Section 1 of the Implementation Work Plan.

PART 2 PRODUCTS

Not Used

PART 3 EXECUTION

Not Used

-- End of Section --

Section 01330

Submittal Procedures

PART 1 GENERAL

1.1 SCOPE

The work of this Section includes, but is not limited to, preparation and provision of all required submittals which includes all documents such as shop drawings, product data, plans, statements, and administrative submittals presented for review.

1.2 ACTIONS POSSIBLE

Submittals will be returned with one of the following notations:

Submittals Not Reviewed

Submittals will not be reviewed if the submittal has been previously reviewed and approved, is not required as a submittal, does not have evidence of being reviewed and approved by the Contractor, or is not complete. Such submittals will be returned with an explanation of the reason it is not reviewed. Returned submittals deemed to lack review by the Contractor or to be incomplete shall be resubmitted with appropriate action, coordination, or change.

Submittals Marked "No Exceptions Taken"

Submittals marked "No Exceptions Taken" authorize the Contractor to proceed with the work covered.

Submittals marked "Make Corrections Noted"

Submittals marked "Make Corrections Noted" authorize the Contractor to proceed with the work as noted provided the Contractor takes no exception to the notations.

Submittals Marked "Amend and Resubmit" or "Rejected - see Remarks"

Submittals marked "Amend and Resubmit" or "Rejected - See Remarks" indicate the submittal is incomplete or does not comply with the design intent or the requirements of the Contract Documents and shall be resubmitted with appropriate changes. No work shall commence prior to approval of resubmission.

1.3 FORMAT OF SUBMITTALS

Transmittal

The transmittal shall identify the Contractor, indicate the date of the submittal, and include information prescribed by the paragraph entitled "Identifying Submittals".

Reviewing Authority

A representative from LEA will be responsible for reviewing and certifying that submittals are in compliance with contract requirements and in conformance with the project design intent. All submittals shall be transmitted to the contact person disclosed at the preconstruction meeting.

Identifying Submittals

Identify submittals with the following information permanently adhered to or noted on each separate component of each submittal and noted on the transmittal. Mark each copy of each submittal identically, with the following:

a. Project title and location.
b. Contract number (if any).
c. The Section number of the Specification Section for which the submittal is required.
d. Transmittal number, consecutive numerical.
e. For a resubmission, an alphabetic suffix on the submittal description, for example, 10A, to indicate the resubmission.
f. The name, address, and telephone number of the Subcontractor, supplier, manufacturer or any other-tier Contractor associated with the submittal.

1.4 QUANTITY OF SUBMITTALS

Submit three copies for LEA and one for return plus any additional copies to be marked and returned. One reviewed and marked copy of the submittal will be provided to the EPA and one copy to the USACE representative on-site.

PART 2 PRODUCTS

Not Used

PART 3 EXECUTION

3.1 PREPARING SUBMITTALS

Responsibility

The Contractor is responsible for the accuracy of submittals. Actions by LEA are intended only to determine compliance with contract requirements and project design intent. Such actions do not apply to quantities, nor relieve the Contractor of his responsibility for furnishing material, or performing work required by the Drawings and Specifications. No action by LEA on submittals shall be considered a guarantee of accuracy of measurements or of existing conditions.

Submittals by Subcontractors

All submittals by Subcontractors shall first be sent by the Subcontractors directly to the Contractor, who shall keep a record of the drawing numbers and date of receipt. The Contractor shall check thoroughly all Subcontractor submittals regarding measurements, sizes of members, materials, and details to satisfy himself that they conform to the intent of the Contract Drawings and Specifications. Submittals found to be inaccurate or otherwise in error shall be returned to the Subcontractor for correction before submitting them to LEA. After the Contractor has checked and approved such drawings, he shall place thereon the date of approval and signature of the checker and then submit them to LEA for review.

3.2 CHANGES TO SUBMITTALS

After final action on submittals (“No Exceptions Taken” and “Make Corrections Noted”), no further changes will be considered without written application from the Contractor, and will not be allowed without prior written consent or approval of LEA.

3.3 ERRORS AND OMISSIONS

Action by the LEA on submittals does not relieve the Contractor from responsibility for errors or omissions which may exist, even though work is done in accordance with such submittals. Review of submittals does not convey any responsibility for errors or omissions to LEA. Where such errors or omissions are discovered later, they shall be made good by the Contractor irrespective of any review by LEA.

-- End of Section --

Section 01500

Temporary Facilities and Controls

PART 1 GENERAL

1.1 GENERAL CONDITIONS

The Contractor will provide all trailers, storage containers and storage areas to complete the work in accordance with the specifications and the Implementation Work Plan. The Contractor will be responsible for providing trailers with working utilities, sanitary facilities, equipment and material storage fencing, storage containers and containment requirements. An office will be provided in the Field office trailer for use by the EPA, RIDEM and USACE representatives.

1.2 UTILITIES

The Contractor will be responsible for the provision of all utility requirements necessary to complete the work in accordance with the specifications and drawings.

1.3 SANITARY FACILITIES

The Contractor shall provide and maintain sanitary accommodations for use by his employees, Subcontractors, appointed representatives of the EPA, RIDEM, USACE, and the Engineer.

The Contractor shall be responsible for complying with all applicable local and State codes and requirements.

1.4 CONTRACTOR ASSISTANCE AND AS-BUILT DRAWINGS

Since the exact extent of the necessary excavations is presently unknown and will be based upon the results of on-going laboratory analysis of the excavated material, the Contractor will be responsible for maintaining and preparing detailed as-built drawings identifying the extent of the excavated materials. The Surveyor will be responsible for locating sample locations and the limits of the final excavations.

PART 2 PRODUCTS

Not Used

PART 3 EXECUTION

Not Used

-- End of Section --

Section 01560

Safety and Environmental Controls

PART 1 GENERAL

1.1 SCOPE

This Section presents the environmental and safety regulations and standards to which the Contractor will be held responsible. Additional regulations may be specified elsewhere in this Specification, on the Drawings, or in the various permits issued for this project. The Contractor is responsible for complying with all requirements, as applicable, including local, State, and Federal requirements which may not be specifically referenced herein or in Section 7 of the Implementation Work Plan.

1.2 REFERENCES

The publications listed below form a part of this Specification to the extent referenced. The publications are referred to in the text by the basic designation only.

CODE OF FEDERAL REGULATIONS (CFR)

29 CFR 1910	Occupational Safety and Health Standards
29 CFR 1910.120	Hazardous Waste Operations and Emergency Response
29 CFR 1926	Safety and Health Regulations for Construction
40 CFR 261	Identification and Listing of Hazardous Waste
40 CFR 262	Generators of Hazardous Waste
40 CFR 263	Transporters of Hazardous Waste
40 CFR 264	Owners and Operators of Hazardous Waste Treatment, Storage, and Disposal Facilities
40 CFR 265	Interim Status Standard for Owners and Operators of Hazardous Waste Treatment, Storage, and Disposal Facilities
40 CFR 300	National Oil and Hazardous Substances Pollution Contingency Plan
49 CFR 171	General Information, Regulations, and Definitions

49 CFR 172	Hazardous Materials, Tables, and Hazardous Materials Communications Regulations
49 CFR 178	Shipping Container Specification

1.3 DEFINITIONS

Sediment

Soil and other debris that have eroded and have been transported by runoff water or wind.

Solid Waste

Rubbish, debris, garbage, and other discarded solid materials, except hazardous waste as defined in paragraph entitled "Hazardous Waste," resulting from industrial, commercial, and agricultural operations and from community activities.

Debris

Combustible and noncombustible wastes such as ashes and waste materials resulting from construction or maintenance and repair work, leaves, and tree trimmings.

Hazardous Waste

Hazardous substances as defined in 40 CFR 261 or as defined by applicable local and State regulations or correspondence from pertinent State and Federal authorities.

Hazardous Materials

Hazardous materials as defined in 49 CFR 171 and listed in 49 CFR 172.

Water Resources

Surface waters of all types (continuous or intermittent) and designated wetlands.

Spill

Any oil, hazardous material, hazardous substance, or similar material released outside its normal container.

1.4 SUBMITTALS

Submit the following in accordance with Section 01330 “Submittal Procedures”.

Records

a. Hazardous Waste Manifests
b. Material Handling and Disposal Report

Hazardous Waste Manifests

Submit completed manifests for disposal of hazardous waste by permitted facilities.

Material Handling and Disposal Report

Develop and maintain a comprehensive material tracking report for all materials generated or otherwise handled at the project site including, but not limited to, brush, stumps, asphalt, soil, decontamination water, dewatering water (if required), personal protective equipment for disposal, and any other materials generated or otherwise handled during the duration of the project.

Material handling and disposal report shall include the following data:

a. Characteristics of the material.
b. Volume.
c. Transporter.
d. Final or intermittent destination.

1.5 CONTRACTOR LIABILITIES FOR ENVIRONMENTAL PROTECTION

The Contractor shall comply with environmental protection laws including but not limited to: the Clean Water Act, the Clean Air Act, and the Resource Conservation and Recovery Act. The Contractor is subject to Federal, State, and local inspections, which may include questioning of Contractor personnel who are working with or have contact with hazardous materials and waste. Contractor shall complete and provide environmental training documentation for training required by local, State, and Federal regulations.

1.6 ENVIRONMENTAL PROTECTION REGULATORY REQUIREMENTS

Plan for and provide environmental protective measures to control pollution that develops during normal construction practice. Plan for and provide environmental protective measures required to correct conditions that develop during the construction of permanent or temporary environmental features associated with the project. Comply with local,

State, and Federal regulations, procedures, and requirements pertaining to the environment, including but not limited to water, waste, air, and noise pollution.

PART 2 PRODUCTS

The Contractor will be responsible for providing all equipment and instrumentation necessary to comply with the safety and environmental requirements of this Contract.

PART 3 EXECUTION

3.1 PROTECTION OF NATURAL RESOURCES

Preserve the natural resources within the project boundaries and outside the limits of permanent work. Restore to an equivalent or improved condition upon completion of work. Confine construction activities to within the limits of the work indicated or specified.

Land Resources

Except in areas to be cleared, do not remove, cut, deface, injure, or destroy trees or shrubs without approval of LEA.

Protection of Watercourses and Inland Wetlands

The Contractor shall comply with all Soil Erosion and Sediment Control requirements as defined in Section 02272 “Soil Erosion and Sediment Controls”, and as otherwise defined on the Implementation Work Plan Drawings.

Temporary Construction

Remove traces of temporary construction facilities such as haul roads, work areas, structures, foundations of temporary structures, stockpiles of excess or waste materials, and other signs of construction. Grade temporary roads, parking areas, and similar temporarily used areas to conform with surrounding contours.

Burnoff

Burnoff of the ground cover is not permitted.

3.2 CONTROL AND DISPOSAL OF SOLID WASTES

Pick up solid wastes, and place in covered containers that are regularly emptied. Do not prepare or cook food on the project site. Prevent contamination of the site or other areas when handling, storing, and disposing of wastes. At project completion, leave the areas clean.

Disposal of Rubbish and Debris

Remove and dispose rubbish and debris in accordance with the Implementation Work Plan.

3.3 CONTROL AND DISPOSAL OF HAZARDOUS WASTE

Hazardous Waste Generation

Handle generated hazardous waste in accordance with 40 CFR 262.

Hazardous Waste Disposal

Dispose of hazardous waste in accordance with local, State, and Federal regulations, especially 40 CFR 263, 40 CFR 264, and 40 CFR 265. Hazardous wastes shall be disposed of in accordance with the Implementation Work Plan.

Removal of hazardous waste from the property shall not occur without prior notification and coordination with LEA. Transport hazardous waste by a permitted, licensed, or registered hazardous waste transporter to a TSD facility. Hazardous waste shall be properly identified, packaged, and labeled in accordance with 49 CFR 172. Labels for containers will be furnished by the Contractor. LEA will coordinate with the Performing Parties Group to provide a Generator's signature on all manifests. The Contractor will provide completed manifests for hazardous waste disposed of off the site to LEA within 7 days of disposal. No hazardous waste shall be brought onto the site.

Hazardous Waste Storage

Store hazardous waste in containers in accordance with 49 CFR 178 and the Implementation Work Plan. Hazardous waste shall be identified and stored in accordance with 40 CFR 261 and 40 CFR 262.

Petroleum Products

Protect against spills, leaks, and evaporation during storage, fueling, and lubrication of equipment and motor vehicles. Dispose of lubricants and excess oil in accordance with all applicable regulations.

3.4 DUST CONTROL

Control dust in accordance with the RI Air Pollution Regulation Control No. 5 – Fugitive Dust and in accordance with the requirements of the Implementation Work Plan.

3.5 SITE HEALTH AND SAFETY

Furnish safety, health, and accident prevention provisions in accordance with the Health and Safety Plan (HASP).

3.6 EXCLUSION ZONE (EZ) AND CONTAMINATION REDUCTION ZONE (CRZ)

Do not permit personnel not directly involved with the project to enter contaminated work zones, called the EZ and CRZ. The EZ shall be an area a minimum of 3 m (10 feet) from the limits of the excavation. At the perimeter of the EZ, establish a CRZ. Limits of the CRZ shall be established by the Contractor. Within the CRZ, equipment and personnel shall be cleaned as stated in the paragraph entitled “Personnel and Equipment Decontamination”. The Contractor's site office, parking area, and other support facilities shall be located outside the EZ and CRZ. Boundaries of the EZ and CRZ shall be clearly marked and posted.

3.7 TRAINING

Provide health and safety training in accordance with 29 CFR 1910 prior to starting work. Furnish copies of current training certification statements for all personnel prior to initial entry into the work site.

On-site Training

Prior to starting on-site work, a health and safety training class shall be held by the SHSO to discuss the implementation of the HASP.

Training Outline

Provide the following:

a. Health and safety organization, including discussion of distribution of functions and responsibilities.
b. Organization and components of the HASP.
c. Physical and chemical site hazard identification.
d. Basic toxicology and toxicity information.
e. Discussion of the EZ and CRZ.
f. Protective clothing.
g. Respiratory protection program.
h. Air quality monitoring.
i. Personnel exposure guidelines.
j. Decontamination procedures.
k. Basic first aid review.
l. Emergency procedures and contingency plan.
m. Site entry and exit procedures.
n. Sampling procedures.

3.8 PERSONNEL PROTECTION

Furnish appropriate personal safety equipment and protective clothing to personnel and ensure that safety equipment and protective clothing is kept clean and well maintained. Furnish three clean sets of personal protective equipment and clothing per day for use by the Engineer or official visitors as required for entry into the EZ.

3.9 RESPIRATORY PROTECTION PROGRAM

Develop and submit a respiratory protection program, as part of the HASP, addressing respirator usage and training, in accordance with 29 CFR 1910.

3.10 PERSONAL PROTECTIVE EQUIPMENT DECONTAMINATION

Decontaminate or properly dispose of personal protective equipment and clothing worn in contaminated areas at the end of the work day. The SHSO shall be responsible for ensuring that personal protective clothing and equipment are decontaminated before being reissued.

3.11 FIRST AID AND EMERGENCY RESPONSE EQUIPMENT AND PROCEDURES

Provide appropriate emergency first aid equipment for treatment of exposure to site physical and chemical hazards. Provide and post a list of emergency phone numbers and points of contact for the community fire, hospital, police, ambulance, and other necessary contacts. Provide and post a route map detailing the directions to the nearest medical facility.

3.12 IGNITION SOURCES

Do not permit ignition sources in the EZ and CRZ. Smoking shall only be permitted in designated areas as approved by LEA.

3.13 PERSONNEL AND EQUIPMENT DECONTAMINATION

Decontaminate personnel and equipment before exiting the work zones per the HASP.

3.14 EMERGENCY RESPONSE REQUIREMENTS

Furnish emergency response in accordance with the Emergency Contingency Plan provided as a section in the Implementation Work Plan and with 29 CFR 1910. In an emergency, take action to remove or minimize the cause of the emergency, report to LEA, and institute necessary measures to prevent repetition of the emergency. Equip site-support vehicles with route maps providing directions to the medical treatment facility.

3.15 UNFORESEEN HAZARDS

Immediately notify LEA of any unforeseen hazard or condition which becomes evident during work.

3.16 DEWATERING

Dewatering activities shall be conducted in accordance with Section 02140 “Dewatering”.

3.17 EROSION CONTROL

All watercourses and wetlands shall be protected from sedimentation during all operations. Erosion control activities shall be conducted in accordance with Section 02272 “Soil Erosion and Sediment Controls”.

3.18 SAMPLING AND ANALYSIS

All sampling and analysis of soils, groundwater, and wastes for off-site disposal will be conducted by LEA. Analytical results are expected within 28 days from the time of sampling. The Contractor will be responsible for coordinating all sampling and disposal activities with LEA.

3.19 WASTEWATER DISPOSAL

Liquid wastes shall be segregated based on generation sources, unless otherwise directed by LEA. Decontamination wastewater shall be handled in accordance with Section

01120 “Decontamination”. Dewatering wastewater shall be handled in accordance with Section 02140 “Dewatering”.

-- End of Section --

Section 02110

Clearing and Grubbing

PART 1 GENERAL

1.1 SCOPE

This work of this Section includes, but is not limited to, the clearing and grubbing of the proposed action areas designated for excavation.

1.2 DEFINITIONS

Clearing

Clearing shall consist of the felling, trimming, and cutting of trees into section and the satisfactory disposal of the trees and other vegetation designated for removal, including down timber, snags, brush, and rubbish occurring in the area to be cleared.

Grubbing

Grubbing shall consist of the chipping in place of stumps in the designated grubbing areas.

PART 2 PRODUCTS

Not Used

PART 3 EXECUTION

3.1 GENERAL

The area designated for clearing and grubbing includes the proposed excavation areas to be determined after further delineation of the excavation areas are completed.

3.2 CLEARING

Trees, stumps, roots, brush, and other vegetation in the area to be cleared shall be cut off flush with the ground surface, except trees and vegetation as may be directed to be left standing. Trees and vegetation to be left standing shall be protected from damage incident to clearing, grubbing, and excavation operations by erection of barriers or by other means as the circumstance requires.

3.3 GRUBBING

Stumps to be grubbed shall be chipped to a depth of not less than 18 inches below the original ground surface.

3.4 SOLID WASTE DISPOSAL

Materials removed during clearing and grubbing shall be disposed of off-site. Solid wastes shall be segregated based on direction from LEA. Equipment shall be provided by the Contractor for transportation and off-site disposal of solid wastes in accordance with the Implementation Work Plan.

-- End of Section --

Section 02140

Dewatering

PART 1 GENERAL

1.1 SCOPE

The work of this Section includes, but is not limited to, dewatering within the excavation areas associated with Allendale Pond as necessary and within the action areas of Lymansville Pond that will have a cofferdam installed as part of the work.

1.2 GENERAL REQUIREMENTS

Dewatering shall be implemented to accommodate excavating and backfilling activities. Water within the perimeter of the cofferdams provided for the action areas associated with Lymansville Pond will be discharged back into the adjacent pond. Dewatering wastewater will not be collected from the cofferdam areas.

PART 2 PRODUCTS

Not Used

PART 3 EXECUTION

3.1 DEWATERING

The Contractor shall provide an adequate number of pumps as necessary to completely dewater the subject area to accommodate non-saturated soil and sediment excavation. Electrical power for dewatering pumps shall be provided by the Contractor.

Three categories of dewatering wastewater will be generated as a direct results of the construction activities proposed for the project. The three categories include water removed from proposed action areas prior to excavation, water generated during construction activities that may contain sediment, and water removed from within an excavation where all of the contaminated material has been previously excavated.

Water removed during dewatering prior to excavation will be discharged directly to the river. Water generated from dewatering during excavation will be containerized, and treated with bag filters prior to discharge to the river. Water removed from an excavation determined to meet the cleanup level, during construction of the dam after all material has been removed for example, will be discharged directly to the river upstream of the cofferdam. The contractor will discuss each dewatering activity with the EPA and USACE prior to initiating any dewatering operation to agree to the category for water management.

3.2 TEMPORARY STORAGE TANKS

It is LEA's intention to pump water from within the cofferdams back to the surrounding pond without collection, sampling or treatment. Temporary storage tanks shall be used, if necessary, to immediately store all liquids pumped from the excavation area. The Contractor shall provide an adequate number of temporary storage tanks with suitable capacity as necessary to progress with the work. Storage tanks will be provided with secondary containment adequate to provide 110% of the volume of each tank utilized.

3.3 SAMPLING OF DEWATERING WASTEWATER

In the event that dewatering wastewater requires collection and storage, LEA will conduct sampling and laboratory analysis on the liquid. Upon receipt of laboratory data, LEA will direct the Contractor as to the disposal procedures. No additional discharge will be permitted into a storage tank which has been previously sampled for disposal characterization. Laboratory results are expected within 3 weeks from the time of sampling. The Contractor will be responsible for coordinating all sampling and disposal activities with LEA.

3.4 DISPOSAL OF DEWATERING WASTEWATER

Upon receipt of laboratory data from the dewatering wastewater analysis, LEA will direct the Contractor as to the disposal requirements.

-- End of Section --

Section 02220

Earthwork

PART 1 GENERAL

1.1 SCOPE

The work of this Section includes, but is not limited to, excavating, stabilization, filling, backfilling, compacting, and grading activities.

1.2 REFERENCES

The publications listed below form a part of this Specification to the extent referenced. The publications are referred to within the text by the basic designation only.

ASTM C 136 (1993) Sieve Analysis of Fine and Coarse Aggregates

ASTM D 1140 (1992) Amount of Material in Soils Finer Than the No. 200 (75-Micrometer) Sieve

ASTM D 1556 (1990) Density and Unit Weight of Soil in Place by the Sand-Cone Method

ASTM D 1557 (1991) Laboratory Compaction Characteristics of Soil Using Modified Effort (56,000 ft-lb/ft^3) (2,700 kN-m/m^3)

ASTM D 2487 (1993) Classification of Soils for Engineering Purposes (Unified Soil Classification System)

ASTM D 4318 (1993) Liquid Limit, Plastic Limit, and Plasticity Index of Soils

UNITED STATES DEPARTMENT OF AGRICULTURE (USDA) (1962) Soil Survey Manual

1.3 SUBMITTALS

Submit the following in accordance with Section 01330 “Submittal Procedures”.

Field Test Reports

a. Backfill Material Test
b. Density Tests
c. Topsoil Test

d. Bank Run Gravel Test

Materials

Identify virgin borrow source(s), 14 days prior to transporting to the site for approval by LEA, for make-up fill material.

1.4 DELIVERY, STORAGE, AND HANDLING

Perform in a manner to prevent contamination or segregation of materials.

PART 2 PRODUCTS

2.1 SOIL MATERIALS

Free of debris, roots, wood, scrap material, vegetation, refuse, soft unsound particles, frozen, deleterious, unsuitable, or objectionable materials. Unless specified otherwise, the maximum particle diameter shall not exceed one-half the lift thickness at the intended location.

Bank Run Gravel

Process gravel shall meet the following gradation requirements:

Square Mesh Sieve	% Passing by Weight
2”	100
1 1/2”	95-100
3/4”	50-95
#4	20-45
#100	2-10

Topsoil

Topsoil shall meet the USDA textural classification of loam, silty loam, sandy loam or loamy sand and shall include a minimum organic content of 5 to 20 percent based on “loss-on-ignition” laboratory tests. The pH of the soil shall be between 6.0 and 7.5. Topsoil shall be virgin, not manufactured or processed.

Polyethylene Sheeting

Polyethylene sheeting shall be a minimum 6 mil thickness.

2.2 BORROW

Obtain borrow materials required as bank run gravel and topsoil from virgin borrow sources approved by LEA. Submit the virgin borrow source 14 days prior to transporting material to the site. LEA will be sampling and chemically analyzing the material to approve its use on the site. If the material is unacceptable, other sources will be required to be submitted to LEA for approval.

PART 3 EXECUTION

3.1 PREPARATION

Unsuitable Material

Remove vegetation, debris, decayed vegetable matter, sod, mulch, and rubbish underneath paved areas or concrete slabs.

3.2 UTILITIES

Location of the existing utilities indicated is approximate. The Contractor shall physically verify the location and elevation of the existing utilities indicated prior to starting construction. The Contractor shall be responsible for coordinating utility locations with Call-Before-You-Dig or similar service.

3.3 EXCAVATION REQUIREMENTS

Excavate to the grades, elevations, and dimensions as directed by LEA. In general, the excavation is expected to extend approximately 6 inches to 2 feet below the existing ground surface.

Hours of Operation

Excavation shall take place only during the hours of 7:00 a.m. to 5 p.m. from Monday to Friday. No excavating will be permitted on Saturday or Sunday unless otherwise approved or directed by LEA.

Environment Limitations

Excavation shall take place when winds are less than 30 mph. Dust preventative shall be applied to all disturbed areas, as directed by LEA, or as otherwise needed. Dust suppressant products shall be presented to LEA for approval prior to application.

Temporary Stockpiling

Stockpiling of excavated soil is prohibited anywhere on the site. Excavated materials shall be immediately transported directly off-site for disposal or into roll-off containers for storage in the Roll-off Storage Area.

Off-Site Hauling

Off-site hauling of soil materials shall be accomplished by an appropriately licensed hauler. All haul vehicles traveling on Town owned streets shall be properly covered, decontaminated, and trimmed to avoid dispersion of the hauled material via wind or other means.

On-Site Hauling

All vehicles leaving the exclusion zone (EZ) and/or the contamination reduction zone (CRZ) shall be fully decontaminated.

Clean-up Responsibilities

At the end of each work day, the Contractor shall be fully responsible for sweeping, picking up, and removing any dust, dirt, or mud from any paved roadways used for hauling, which was deposited as a result of hauling operations.

Limits of Excavation

Excavation shall be performed to depths and limits approximately as identified by LEA. Additional excavation may be required by the Contractor depending on actual field conditions as directed by LEA.

All areas to be excavated will be approximately delineated after additional screening samples are collected in accordance with the Implementation Work Plan. Soil with contaminant concentrations above the 1 ppb dioxin TEQ criteria will be excavated and transported off-site for disposal. Confirmatory samples will be taken from the walls of excavated areas and analyzed by LEA. Excavation beyond the delineated areas will occur until contaminants are no longer present above the applicable standards. All sampling,

field screening and laboratory analysis shall be provided by LEA in accordance with the Work Plan.

3.4 SOIL STABILIZATION

Soil and sediment containing a moisture content that cannot be directly disposed off-site will require stabilization prior to loading into the roll-off container for disposal. Stabilization of the soil will be provided by adding granular limestone or similar material to absorb free liquids. In the event that the addition of this material causes a visible reaction and produces visible vapor, the quantity of lime or similar material will be adjusted in the field. If the addition of lime at any quantity produces an unacceptable vapor cloud, sawdust or similar organic material that will not produce heat and water vapor that may expose workers and the local residents from exposure unintentionally will be utilized. Organic material has less absorption ability and is less effective than lime or similar material. The soil will be stabilized in the excavation and organic material may be added to the roll-off container in the event that free liquids appear on the surface of the containerized material.

3.5 FILLING AND BACKFILLING

Bank Run Gravel Placement

Place bank run gravel to 4 inches below grades to match the surrounding contours. Compact areas with equipment placing material. Aerate material excessively moistened by rain to a satisfactory moisture content. Finish to a smooth surface by blading, rolling with a smooth roller, or both.

3.6 GRADING

Finish grades shall generally match the existing elevations on site unless otherwise directed by LEA. Finish grade shall be defined as the top of the newly deposited topsoil. For existing grades that will remain but which were disturbed by Contractor's operations, grade as directed by the Engineer.

3.7 FIELD QUALITY CONTROL

Topsoil Testing

Topsoil testing shall be completed on a minimum of three discreet representative samples per source area. Test topsoil for mechanical requirements outlined in Part 2 of this Specification using USDA Soil Survey Manual Methods. Test for organic matter content using "loss-on-ignition" test methods and present findings in percent organic matter by

weight. Provide plant nutrient testing complete with a recommendation for lime and fertilizer needs. In lieu of the plant nutrient test, the Contractor may apply a standard 10-10-10 or equivalent fertilizer mix at a rate of 7.5 pounds per 1,000 square feet, and ground limestone at a rate of 135 pounds per 1,000 square feet.

-- End of Section --

Section 02272

Soil Erosion and Sediment Controls

PART 1 GENERAL

1.1 SCOPE

The work of this Section includes, but is not limited to, furnishing and installing soil erosion and sediment control measures as indicated on the Drawings, as specified herein, and as necessary for the proper and complete performance of the work.

1.2 REFERENCES

Except as herein specified or as indicated on the Drawings, the work of this Section shall be consistent with the practices and policies set forth in the "RI Soil Erosion and Sediment Control Handbook".

PART 2 PRODUCTS

Not Used

PART 3 EXECUTION

3.1 GENERAL

Site Evaluation

Prior to the start of work on the site and weekly during construction, the Contractor and the Engineer shall conduct a field evaluation of the erosion and sediment control measures.

3.2 SET UP

Excavation operations shall be conducted in such a manner to reduce erosion and sedimentation to a practical minimum.

Install perimeter silt fence as designated on the Drawings.

Additional soil erosion facilities shall be installed as work progresses or as directed by LEA.

3.3 MAINTENANCE

Sediment removed from erosion control barriers shall be disposed of off the site as directed by LEA and in accordance with the Implementation Work Plan.

Maintain all erosion control measures until a suitable stand of vegetative cover (90 percent cover or as determined by LEA).

3.4 REMOVAL

Care shall be exercised during such removal to minimize erosion or sedimentation of watercourses.

Provide protection as follows:

a. Construction methods shall minimize the discharge of silt and sediment to any wetland or adjacent to any wetland.
b. Construction equipment used near wetlands and watercourses shall be of a type that does least damage to adjacent areas and minimizes the need for and size of access roadways.
c. Construction shall be performed in such a manner so as to keep land grading and disturbance adjacent to wetland and watercourse to a minimum.
d. Construction areas shall be revegetated and/or adequately protected from subsequent erosion. Revegetation/erosion controls shall be made promptly and shall meet or equal those outlined in the latest edition of the “RI Soil Erosion and Sediment Control Handbook”.
e. No debris or excess excavated materials shall be stored or disposed of within wetlands or adjacent watercourses.
f. Construction equipment and materials shall not be stored or serviced within the wetland areas, nor shall any petroleum products be stockpiled therein.

g. The Contractor shall maintain all backfilled excavations in proper condition until expiration of the guarantee period. All depressions appearing in the backfilled excavation shall be properly filled and reseeded as required by LEA.

■ End of Section –

Section 02900

Landscaping

PART 1 GENERAL

1.1 SCOPE

The work of this Section includes, but is not limited to, furnishing, installing, and maintaining soil erosion and sediment controls and establishing turf.

1.2 REFERENCES

Reference is made to Section 02220 "Earthwork" for topsoil, topsoil testing, fertilizer, and liming specifications and to Section 02272 "Soil Erosion and Sediment Controls".

Except as herein specified or as indicated on the Drawings, the work of this Section shall be consistent with the practices and policies set forth in the "RI Soil Erosion and Sediment Control Handbook".

1.3 COMPLIANCE

Comply with all applicable local, State, and Federal regulations and procedures.

The work of this Section shall be consistent with the practices and policies set forth in the "RI Soil Erosion and Sediment Control Handbook".

1.4 SOIL EROSION AND SEDIMENT CONTROL RESPONSIBILITY

The Contractor is fully responsible for implementing a soil erosion and sediment control plan which protects the environment from pollution resulting from surface-runoff within the excavation and adjacent areas of this project. The soil erosion and sediment control strategy included on the Drawings is intended to define the minimum protection necessary based on average weather conditions and a six month contract duration. The Contractor may need to add to this plan depending on specific site schedule or weather conditions.

1.5 SCHEDULE

Seed shall be applied between April 1 through June 15 or August 15 through September 15. If excessively dry weather occurs during the seeding period it shall be the Contractor's responsibility to apply water, as required, to progress the work.

PART 2 PRODUCTS

2.1 SEED

Grass seed shall be as follows:

Seed Type	% of Mix
Crown Vetch	60
Perennial Rye	40

Grass seed shall be applied as recommended by manufacturer at a rate of 25 pounds per acre (lbs/acre) minimum. Increase seed rate to 30 lbs/acre for hydroseeding applications.

2.2 LIME AND FERTILIZER

The Contractor shall provide plant nutrient testing as specified in Section 02220 "Earthwork" complete with a recommendation for lime and fertilizer needs. In lieu of the plant nutrient test, the Contractor may apply a standard 10-10-10 or equivalent fertilizer mix at a rate of 7.5 pounds per 1,000 square feet, and ground limestone at a rate of 135 pounds per 1,000 square feet.

2.3 MULCH

Mulch may be comprised of wood cellulose fiber for hydroseeding operations or ground straw for other applications. Substitutions may be offered by the Contractor for approval by LEA.

PART 3 EXECUTION

3.1 TOPSOIL

Immediately prior to placing topsoil, scarify subgrade to a 2-inch depth for bonding of topsoil with subsoil. Remove debris and stones larger than one inch in any dimension

remaining on surface after tillage. Spread topsoil evenly to 4-inch thickness. Comply with the Specifications of Section 02220 “Earthwork”.

3.2 FERTILIZER AND PH ADJUSTERS

Apply fertilizer and pH adjuster at rates and analysis as determined by laboratory soil tests, if completed, of the topsoil supplied.

Apply the specified fertilizer at the specified rate, raking lightly into the soil. Apply the specified lime at the specified rate raking lightly into the soil.

3.3 SEEDING

Broadcast Seed Application

Sow seed at the rate of 25 pounds per acre using approved sowing equipment. Sow half of seed in one direction and remainder at right angles to the first sowing. Cover seed to an average depth of 1/2 inch using spike-tooth harrow, cultipacker, or other approved device.

Hydroseeding

Mix seed, fertilizer, and wood cellulose fiber in required amount of water to produce a homogenous slurry. Add wood cellulose fiber after seed, water, and fertilizer have been thoroughly mixed and apply at the rate of 200 pounds per acre dry weight. When hydraulically sprayed on the ground, material shall form a blotter like cover impregnated uniformly with grass seed. Immediately following the application of the slurry mix, make separate application of wood cellulose mulch at the rate of 1000 pounds, dry weight, per acre. Cover shall allow rainfall or applied water to percolate to underlying soil.

Mulch

If broadcast seeding methods are used, apply ground straw with mulch blower at a rate of 1-1/2 tons per acre (70 pounds per 1000 square feet).

3.4 PROTECTION OF TURF AREAS

Immediately after turfing, protect area against traffic and other use. Water seeded areas as required for germination and subsequent growth. Contractor is responsible for watering seeded areas until such time that the maintenance is officially transferred to United.

3.5 RESTORATION

Restore to original condition existing turf areas which have been damaged during the excavation operations or by temporary soil erosion control structures. Any existing turf areas that have been damaged during the site operations, and which have not been specifically identified on the Drawings, shall be restored to original condition at the Contractor's expense.

3.6 FIELD QUALITY CONTROL

Final Inspection and Acceptance

Final inspection by the Engineer will be made upon written request from the Contractor. Final acceptance by LEA will be based upon a satisfactory stand of turf (a minimum of 90 percent coverage or as determined by LEA).

-- End of Section --

APPENDIX F

Dam Reconstruction Specifications

TECHNICAL SPECIFICATIONS

ALLENDALE DAM RECONSTRUCTION
NORTH PROVIDENCE, RHODE ISLAND

July 2001

Prepared for

Loureiro Engineering Associates Inc.
100 Northwest Drive
Plainville, Connecticut 06062

by

GEI Consultants, Inc.
1021 Main Street
Winchester, MA 01890

Project 01179

Michael P. Walker, P.E.,
Senior Engineer

TABLE OF CONTENTS

DIVISION 2 - SITEWORK

02110	SITE PREPARATION
02227	GRAVEL FILLS
02228	EXCAVATION
02272	ROCK BOLTS
02274	EROSION AND SEDIMENTATION CONTROL
02403	CONTROL AND DIVERSION OF WATER

DIVISION 3 - CONCRETE

03100	STRUCTURAL CONCRETE FORMWORK
03200	CONCRETE REINFORCEMENT
03250	EXPANSION JOINTS, CONTRACTION JOINTS, AND WATERSTOPS
03300	CAST-IN-PLACE STRUCTURAL CONCRETE

DIVISION 11 - EQUIPMENT

11285	GATES

SECTION 02011

SUBSURFACE INVESTIGATIONS

1 GENERAL

1.1 SUMMARY

The physical conditions indicated on the contract drawings and in the specifications are the result of site surveys, hand augerings, borings, and laboratory tests. Locations at the site where subsurface investigations were performed are contained in contract documents prepared by the United States Army Corps of Engineers.

1.2 INTERPRETATION

Subsurface investigation data are provided only for information and the convenience of the Contractor. The data shown on the boring logs is for the specific locations indicated only and no assurance is given that these conditions are representative of conditions between borings or areas adjacent thereto. The responsibility lies with the Contractor to interpret subsurface conditions that may affect his work. It is expressly understood that the Government will not be responsible for any interpretation or conclusion drawn from the subsurface information furnished to the Contractor.

1.3 GROUND AND SURFACE WATER

Absence of the location of ground or surface water level on a log shall not be necessarily construed that ground or surface water will not be encountered at that level during construction.

2 PRODUCTS (NOT USED)

3 EXECUTION (NOT USED)

SECTION 02110

SITE PREPARATION

1 GENERAL

1.1 SUMMARY

Site preparation includes clearing, grubbing, and removal of portions of the existing wood dam.

1.2 DEFINITIONS

1.2.1 Clearing

Clearing shall consist of the felling, trimming, and cutting of trees into sections and the satisfactory disposal of the trees, down timber, snags, brush, rubbish, and other vegetation occurring in the areas to be cleared.

1.2.2 Grubbing

Grubbing shall consist of the removal and disposal of stumps, roots larger than 3 inches in diameter, and matted roots from the designated grubbing areas.

2 PRODUCTS (NOT USED)

3 EXECUTION

3.1 CLEARING

Trees, stumps, roots, brush, and other vegetation in the work areas and ten feet beyond shall be cut off flush with or below the original ground surface, except such trees and vegetation as may be indicated or directed to be left standing. Trees designated to be left, standing within the cleared areas, shall be trimmed of dead branches 1-1/2 inches or more in diameter and shall be trimmed of all branches to the heights indicated or directed. Limbs and branches to be trimmed shall be neatly cut close to the bole of the tree or main branches. Cuts more than 1-1/2 inches in diameter shall be painted with an approved tree-wound paint. Trees and vegetation to be left standing shall be protected from damage incident to clearing, grubbing, and construction operations by the erection of barriers or by

such other means as the circumstances require. Clearing shall also include the removal and disposal of structures and additional trees that obtrude, encroach upon, or otherwise obstruct the work.

3.1 GRUBBING

Material to be grubbed, together with logs and other organic or metallic debris not suitable for foundation purposes, shall be removed to a depth of not less than 18 inches below the original surface level of the ground within ten feet of the outlet structure, weir and gravity wall (including the zone to be excavated and backfilled. The top 18-inches of the existing dam shall be demolished during grubbing. Stump removal is not required in other areas. Depressions made by grubbing shall be filled with suitable material and compacted to make the surface conform with the original adjacent surface of the ground.

3.2 TREE REMOVAL

Where indicated or directed, trees and stumps that are designated as trees shall be removed from areas outside those areas designated for clearing and grubbing. This work shall include the felling of such trees and the removal of their stumps and roots as specified in paragraph GRUBBING. Trees shall be disposed of as specified in paragraph DISPOSAL OF MATERIALS.

3.3 DISPOSAL OF MATERIALS

Logs, stumps, roots, brush, rotten wood, stones, and other debris from the clearing and grubbing operations shall be disposed of in accordance with the Implementation Work Plan. The Contractor shall be responsible for compliance with all Federal and State laws and regulations.

SECTION 02227

GRAVEL FILLS

1 GENERAL

1.1 SUMMARY

This section covers gravel fill placement for the Phase II cofferdam.

1.2 SUBMITTALS

The following shall be submitted in accordance with Section 01300 SUBMITTALS:

SD-01 Data.

Sources; GA.

At least 30 days prior to the initial placement of any gravel fill material, the Contractor shall submit the locations of the proposed sources and the names of the processing firms.

SD-09 Reports.

Gravel Gradation Test Results; GA.

At least 30 days prior to the initial placement of any gravel fill material, the Contractor shall submit the gradation test results.

SD-14 Samples.

Gravel; GA.

A 50-pound bulk sample of gravel fill material shall be submitted for approval of gradation and for approval of the soundness and durability of the gravel, sand, and stone particles. Test samples shall be representative samples taken in the presence of the Engineer. Testing and approval of the material for soundness and durability will be performed by the Engineer as specified in Section 02278 STONE PROTECTION. Samples shall be delivered in accordance with Section 01440

CONTACTOR QUALITY CONTROL, paragraph "Furnishing or Transportation of Samples for Testing".

1.3 SEQUENCING AND SCHEDULING

The Contractor shall plan the sequence of construction of the work covered herein with the work covered in this and other sections of the specifications to ensure minimum damage due to all causes, including high river flows and stream erosion, and to comply with the requirements in this and other sections of the specifications. The sequence of construction and methods of construction of all earthwork will be subject to the approval of the Engineer.

2 PRODUCTS

2.1 SOURCES

Material for the construction of gravel fills shall be obtained from the required excavations, if possible, for the project and from Contractor furnished off-site sources. The Engineer shall be the sole judge of the suitability of any material for use as a gravel fill material regardless of its source. If the quantity of suitable gravel fill material available from the required excavations is not sufficient for the completion of the gravel fill zones, these zones shall be completed using gravel fill material furnished by the Contractor from off-site sources.

2.2 GRAVEL FILL MATERIAL

Material for the construction of gravel fills shall consist of sand, gravel, or crushed stone composed of tough, durable particles. It shall be reasonably free from thin, flat, and elongated pieces, and shall contain no organic matter or soft, friable particles in quantities considered objectionable by the Engineer. The material shall be reasonably well graded within the following limits.

Sieve Size (U.S. Standard)	Percent Passing by Dry Weight
6-inch	100
1-inch	50-85
No. 4	25-60
No. 40	5-30
No. 200	0-8

In addition, not more than 3 percent, by dry weight, of the component passing the No. 4 sieve shall consist of particles finer than 0.02 millimeters.

3 EXECUTION

3.1 PREPARATION OF FOUNDATION

The foundation areas for all gravel fills shall be excavated or stripped as specified in Section 02228 EXCAVATION. No fill material shall be placed in any foundation area until the area has been inspected and approved. No foundation area will be approved unless it is free of all mud, debris, trash, stumps, or other similar materials. All foundation areas except those for dumped fills shall be dry and free of water at the surface during placement of gravel fill material thereon.

Place filter fabric or other membrane materials under the dumped gravel fill to form a barrier between dumped fill and existing soils.

3.2 PLACEMENT AND COMPACTION

3.2.1 General

The gravel fill zones shall be constructed to the lines, grades, and cross sections indicated on the drawings or defined in the specifications unless otherwise directed. Each fill zone shall extend to the actual bottom and side slopes of an excavation regardless of the locations or excavation lines indicated on the drawings or defined in the specifications. The base of the cofferdam shall be placed in one three-foot lift of gravel fill. Compacted gravel fill layers shall be placed on the base fill material. No fill material shall be placed upon a surface of frozen material, nor shall snow, ice, or frozen materials be incorporated into any fills. The Contractor shall maintain and protect all excavations, foundation areas, and fills in completed and uncompleted portions of the work in a satisfactory condition at all times until final completion and acceptance of all work under the contract.

3.2.2 Operational Restrictions

No fill material shall be placed against concrete until the concrete has been in place at least 14 days. No fill material

shall be placed against the sides of an uncompleted reach or section of any cast-in-place concrete structure without prior approval. No heavy equipment such as bulldozers, tractors, trucks, or graders, shall be operated in the following areas:

a. Over the top of footings until the concrete has been covered with 8 inches of fill material.

b. Within 3 feet measured horizontally of the outer structure of retaining walls.

3.2.3 Haul Roads

Haul roads shall be designed to maintain the intended traffic, to be free draining and shall be maintained in good condition throughout the contract period, unless otherwise directed.

3.2.4 Moisture Control

Gravel fill materials shall be placed at moisture contents, which will allow proper operation of hauling and compaction equipment without excessive rutting or dust.

3.2.5 Compacted Gravel Fill

Material for gravel fills shall be spread with bulldozer, other approved equipment, or by hand to form uniform loose layers not greater than 12-inches thick. During placement all stones with maximum dimension greater than 2/3 the loose layer thickness shall be removed. Stones so removed shall be picked up and transported to the material storage area. Each layer of gravel fill shall be compacted with four coverages of the vibratory roller specified in the "Compaction Equipment" paragraph of this specification section. In restricted areas fill materials shall be spread by hand shoveling in horizontal layers except as otherwise directed.

3.2.6 Compaction In Restricted Areas

A restricted area is hereby defined as a horizontal area of a fill zone at any elevation within which compaction of the layers of fill material cannot be accomplished with tractors due to space limitations or an area within which the operation of tractors and spreading equipment is prohibited by the provisions of the "OPERATIONAL RESTRICTIONS" paragraph herein. In restricted areas, gravel fill shall be spread in 6-inch layers and compacted with four coverages of the approved plate

vibrator specified in subparagraph "Construction Equipment". The maximum permissible size stone for any gravel fill material to be placed in a restricted area shall not be greater than 2/3 of the specified loose thickness of the layer being placed.

3.2.1 Dumped Gravel Fills

Dumped gravel fills shall be constructed in three-foot lifts or as directed to form the bases of the cofferdam. Placement shall be done in a manner that will not cause segregation. Prior to the construction of a dumped fill, its foundation area shall be cleaned and approved as specified in paragraph "PREPARATION", herein. Dumped gravel fill material for the bases of the cofferdams may be placed without dewatering of the foundation area. The top surface of a dumped fill upon which a compacted fill is to be constructed shall be compacted as specified for a layer of compacted gravel fill. Materials for use in the construction of a dumped fill zone shall contain no stone too large to be placed in the zone or more than 1/4 cubic yard in volume.

3.2.2 Compaction Equipment

3.2.2.1 Equipment

Compaction equipment shall conform to the following requirements and shall be used as prescribed in subsequent paragraphs.

3.2.2.2 Vibratory Roller

A vibratory roller shall be a unit designed for the compaction of soil or rock by vibration and shall be the product of a manufacturer nationally recognized for the design and production of such equipment. The roller shall be a single drum unit having a width of 25 inches or more. The roller shall weigh more than 1,200 pounds and shall be self-propelled with forward and reverse speeds.

3.2.2.3 Plate Vibrator

A place vibrator shall be an approved plate surface vibrator designed for the compaction of soils by vibration and the product of a manufacturer nationally recognized as a specialist in the design and manufacture of such equipment. The surface contact plate shall be between 18 and 24 inches in width.

SECTION 02228

EXCAVATION

1 GENERAL

1.1 SUMMARY

Excavation covers removal of the earth and rock for the foundation of the new dam and backfill material behind the existing west stone wingwall.

1.2 DEFINITIONS

1.2.1 Unsuitable Material

The term "unsuitable material" as used in these specifications is defined as any excavation material or material to be excavated which, in the opinion of the Engineer, does not meet the requirements for gravel fill, gravel bedding or stone protection. Unsuitable materials shall include all materials removed by stripping.

1.2.2 General Excavation

General excavation shall consist of the satisfactory removal and disposal of all materials, except materials removed as rock excavation, as defined below.

1.2.3 Rock Excavation

Rock excavation shall consist of the satisfactory removal and disposal of boulders, highly weathered bedrock, and rock blocks detached from bedrock.

1.2.4 Disposal

Disposal of the excavated material shall include its haul to a stockpile or an off-site area provided by the Contractor. Disposal shall also include the placement of excavated material in a stockpile and its excavation and haul therefrom.

1.3 SEQUENCING AND SCHEDULING

The Contractor shall plan the sequence of excavation with the work covered in other sections of the specifications to ensure minimum damage due to all causes, including high river flows and stream erosion, and to comply with the requirements in this and other sections of the specifications. Stripping and excavation in and along the river shall be coordinated with the construction of slope protection. Portions of the slopes and foundation areas which have been stripped or excavated shall be adequately stabilized and protected from erosion, until placement of permanent slope protection materials, in accordance with the Implementation Work Plan.

2 PRODUCTS (NOT USED)

3 EXECUTION

3.1 GENERAL EXCAVATION

General excavation shall consist of the removal and disposal of all material of any description, except those defined as rock excavation, from within the lines, grades, and slopes and limits indicated on the contract drawings, specified herein, or directed in the field. General excavation shall include all required stripping and grading.

3.1.1 Stability

The Contractor shall be responsible for producing and maintaining the stability of the side slopes of all excavations.

3.1.2 Unsuitable Foundation Material

When and as directed, the Contractor shall excavate below the grades and limits shown on the drawings to remove unsuitable foundation materials.

3.1.3 Stripping

Stripping shall be done in all excavation areas and in the foundation areas of fills to the depths necessary to remove unsuitable foundation material such as organic soil or other soft material, sod, stonewalls, surface boulders, trash, debris and similar objectionable material. Where material is placed

on potentially contaminated soils, stripping will not be required..

3.1.4 Foundation Preparation

The surface areas upon which gravel fill is to be placed shall be trimmed and dressed to conform to the lines, grades, and cross-sections shown on the drawings, or as modified, to within the tolerances specified herein. For surfaces produced by excavation and upon which gravel fill material is to be placed, the tolerances from the specified lines and grades shall be plus 2 inches and minus 4 inches for dry areas and plus 2 inches and minus 12 inches for surfaces below water. The extreme of these tolerances will not be allowed over a continuous area greater than 200 square feet. Where it is necessary or desirable to fill a low surface area, the fill material shall be gravel. These fill materials shall be placed, conditioned, and compacted as specified Section 02227 GRAVEL FILLS. Immediately prior to the placement of gravel fill, the surface upon which it is to be placed will be inspected and no material shall be placed thereon until the surface has been approved.

3.2 ROCK EXCAVATION

3.2.1 General

Rock excavation shall consist of the removal of boulders, highly weathered rock and rock blocks detached from the underlying bedrock measuring greater than one cubic yard in volume. The Engineer shall control the amount of rock excavation.

3.2.2 Limits of Rock Excavation

The limits of the proposed foundations for the dam are approximately shown on the contract drawings. The Engineer may adjust the depth to, or the width of, the foundations if, in the opinion of the Engineer, conditions exposed in the foundation excavations warrant such modifications.

3.2.3 Foundation Inspection

Inspections to determine the adequacy of the foundation materials will be performed by the Engineer in all dam foundation areas between completion of excavation and placement of concrete. The Contractor will cooperate to the extent

necessary to assist in inspection and mapping activities, which may require additional survey control points and access. The Contractor will coordinate his schedule for foundation excavation and preliminary cleanup with the Engineer to ensure that the cleanup proceeds in an orderly manner.

The Contractor will perform at least one boring with at least 20 feet of rock core. The boring may be grouted and used as a rock anchor hole. The Engineer will observe the core to confirm design assumptions regarding rock quality.

3.2.4 Preliminary Cleanup

Preliminary cleanup shall be performed on all or any part of the rock foundation surfaces prior to inspection and mapping of rock subgrade. This work shall consist of removing loose and/or weathered rock and pockets of fines, sand, rock rubble or gravel, and other objectionable material from the in place rock surface including areas of depression, large crevices, and open rock joints. The loose material need not be removed where the width of the opening is less than 2 inches. Picking, barring, and hand excavation may be necessary to obtain a foundation surface free from loose, drummy, or shattered materials. The Engineer may require that the excavation be continued and the preliminary cleanup procedure repeated until a satisfactory foundation surface is reached and it is satisfactory for inspection and mapping.

3.2.5 Final Cleanup

Final cleanup shall be performed on all or any part of the rock foundation surface. Rock surfaces upon which concrete is to be placed shall be clean, free from oil, standing or running water, ice, mud, drummy rock, coatings, debris and loose, semi-detached or unsound fragments. Seams shall be cleaned to a satisfactory depth and to firm rock on the sides. Immediately before concrete is placed, all rock surfaces shall be cleaned thoroughly by the use of any or all methods specified for preliminary cleanup or other approved methods. All rock surfaces shall be kept continuously wet for at least 24 hours immediately prior to placing concrete thereon. All approximately horizontal surfaces shall be covered, immediately before the concrete is placed, with a layer of mortar approximately similar to that in the concrete mixture.

3.1 STOCKPILING

The Contractor shall stockpile only clean fill imported to the Site. Material excavated shall be placed directly into trucks or roll-off containers for disposal off-site. Material placed into roll-off containers and stored on-site will be handled and disposed in accordance with the Implementation Work Plan.

3.2 GRADING

Roads, ramps, and other areas shall be graded in accordance with the sections and grades indicated on the drawings. Shoulders, ditches, side slopes, and other designated areas shall be shaped, trimmed, and dressed in a neat and workmanlike manner to the lines and grades shown on the drawings or directed in the field. All soft or yielding material or other unsuitable material in the subgrade shall be removed and replaced with suitable compacted fill material.

3.3 UTILIZATION OF MATERIALS

All excavation materials shall be satisfactorily utilized or disposed of as directed. All materials shall be excavated, separated, and utilized in the permanent work as specified in this and other sections of these specifications, with the exception of unsuitable materials and materials in excess of those required for the construction of gravel fills and stone protection. Utilize potentially contaminated materials in a manner consistent with other elements of the work plan. The Engineer will evaluate suitability of a material or load of material for use in the construction of gravel fills and stone protection. No material shall be disposed of unless specifically authorized.

3.4 DISPOSAL OF EXCESS AND UNSUITABLE MATERIALS

Excess and unsuitable materials from excavation shall be disposed in accordance with the Implementation Work Plan.

3.5 BLASTING

Blasting will not be permitted.

SECTION 02272

ROCK BOLTS

PART 1 GENERAL

Provide all labor, equipment, material, and services to furnish, install, and test rock bolts for permanent reinforcement of the dam and abutment wall.

1.1 REFERENCES

The publications listed below form a part of this specification to the extent referenced. The publications are referred to in the text by basic designation only.

AMERICAN SOCIETY FOR TESTING AND MATERIALS (ASTM)

ASTM A 36	(2000) Carbon Structural Steel
ASTM A 61	(2000) Deformed and Plain Billet-Steel Bars For Concrete Reinforcement
ASTM F 436 or ASTM A 490	(2000) Heat-Treated Steel Structural Bolts,150 ksi Minimum Tensile Strength

AMERICAN WELDING SOCIETY (AWS)

AWS D1.4	(1998) Structural Welding Code - Reinforcing Steel

1.2 SUBMITTALS

The following shall be submitted in accordance with Section 01330 SUBMITTAL PROCEDURES:

SD-02 Shop Drawings

Rock Bolts

Detail drawings showing rock bolts, spacers, plates, and accessories. Include detailed drilling, pregrouting, installation, tensioning and testing procedures.

Record drawings showing locations, lengths and lock-off loads of all rock bolts. Also submit load test data.

SD-03 Product Data

Rock Bolts

Product Data for rock bolts, spacers, plates, and accessories.

SD-07 Certificates

Rock Bolts

Certified copies of mill reports attesting that the rock bolts, nuts, and plates meet the requirements specified herein, prior to the installation of reinforcing steel.

Equipment

Submit calibration certification for jacking and/or torque equipment used to tension bolts.

1.3 WELDING

Welders shall be qualified in accordance with AWS D1.4. Qualification test shall be performed at the worksite and the Contractor shall notify the Contracting Officer 24 hours prior to conducting tests. Special welding procedures and welders qualified by others may be accepted as permitted by AWS D1.4.

1.4 DELIVERY AND STORAGE

Rock bolts and accessories shall be stored off the ground on platforms, skids, or other supports.

PART 2 PRODUCTS

2.1 ROCK BOLTS

Rock Bolts for Retaining Wall: 3-inch-diameter, hollow core rebar as manufactured by a company regularly engaged in the manufacture of this type of product. The bolts shall have a minimum yield strength of 300 kips and shall conform to ASTM A615.

2.2 BEARING PLATES

Minimum of 6 inches by 6 inches (maximum 8 by 8 inches) square by 1/2-inch-thick steel conforming to ASTM A36. The bearing plates shall be new, and galvanized.

2.3 WASHERS

Beveled or spherical washers of mild or structural steel and galvanized.

2.4 NUTS

ASTM F-436 or ASTM A-490, new, and galvanized.

2.5 ANCHORAGE

Mechanical expanding anchors suitable for installation in hard rock. Williams R10 spin lock anchors or equal.

PART 3 EXECUTION

3.1 PREPERATION

Bolt locations are indicated on the Drawings and will be adjusted in the field by the Engineer based on observed condition of subgrade and the rock surface.

3.2 INSTALLATION

A. Drill holes into the rock to the required depth at each location. The required depth shall be at least 6 inches deeper than the length of rock bolt to be installed. Drill boreholes 3½ -inch diameter or as recommended by the Manufacturer.

B. Clean holes of all drill cuttings and debris using a compressed air jet before installing the rock bolts. For retaining wall bolts, perform water pressure test, and pregrout holes if required.

C. Tension the rock bolts to the lock-off load shown on the Drawings using a hydraulic jack in accordance with the Manufacturer’s recommendations. If it is not possible to obtain the required tension due to the nature of the rock, notify the Engineer immediately so that a modified procedure

can be established. Do not unload locked-off tensioned bolts for any reason.

D. Replace bolts that become loose during or after installation.

E. Set bolt bearing plates as nearly flat against the rock/concrete face as possible and drypacked underneath with non-shrink grout to seal the bolt hole and provide a flat bearing surface.

F. Load Tests: Perform load testing in general accordance with Post Tensioning Institute (PTI) guidelines. Conduct a PTI performance test on four rock bolts installed and PTI proof tests on the rest of the rock bolts. Replace tested bolts that fail or pull out. Monitor the tests and submit the test results. Use a maximum load for the proof and performance test of 1.33 times the lock-off load, but not more than 0.8 times the yield strength of the bolt.

3.3 FIELD QUALITY CONTROL

Notify the Engineer before installing or testing bolts.

SECTION 02274

EROSION AND SEDIMENTATION CONTROL

1 GENERAL

1.1 SUBMITTALS

The following shall be submitted in accordance with Section 01300 SUBMITTALS:

SD-01 Data.

Erosion and Sedimentation Control Plan; GA.

Submit a plan showing proposed methods, locations, and extent of erosion and sedimentation control. Details of the sediment control fences, including filter fabric, siltation control barriers, and other methods used to control erosion shall be included in the submittal.

1.2 GENERAL

The intent of this work is to control sediment erosion into existing wetlands or watercourses. The sediment and erosion control plan shall meet all Federal, State, and local requirements. Sedimentation control measures shall be constructed to the extent necessary to completely protect the wetlands or watercourses from erosion caused by the Contractor's operations. Construction methods and procedures shall be implemented to minimize erosion.

2 PRODUCTS

2.1 MATERIALS

2.1.1 Hay Bales

Hay bales shall be approximately 36" long by 18" wide by 24" high.

2.1.1.1 Hay

Hay for slope protection and for use in siltation barriers shall be clean, fresh, small grain straw. Salt marsh hay shall not be used.

2.1.2 Silt Fence

Silt fence shall be prefabricated, pre-assembled structure specifically designed for construction site control of sediment run-off. Fence shall include hardwood posts. Fabric shall be at least 2' in width.

2.1.2.1 Acceptable Fence

Silt fence shall be "Silt Fence" or "Envirofence" as manufactured by Mirafi Inc., Charlotte, NC.

3 EXECUTION

3.1 INSTALLATION

The Contractor shall take every precaution to reduce erosion and to stop sediment from leaving the work limits of the Contractor's work area. These precautions are subject to approval by the Contracting Officer and shall include, but are not limited to, hay bales, sediment control barriers, and silt fences. Sedimentation control barriers, hay bales, and silt fences shall be installed prior to any excavation at the site. Hay bales and silt fences shall be toed-in a minimum of 3 inches to prevent undermining.

3.1.1 Silt Fence

Silt fences shall be installed in accordance with the manufacturer's written instructions. Maintenance and repair of the fence shall be performed as required.

3.1.2 Siltation Barrier

Siltation barriers shall consist of a line of hay bales securely staked in place. Bales shall be anchored with 2" by 2" by 3'-6" long wooden stakes. Adjacent hay bales shall be tightly butted together.

3.1.1 Control of Run-off

Berms and drainage swales may be constructed as needed and approved to contain and direct the run-off water towards sediment control fences. Hay bales or silt fences shall be staked across any swales constructed.

3.2 REMOVAL AND DISPOSAL

Establish turf in period specified in grassed areas, before the removal of all erosion control structures.

SECTION 02403

CONTROL AND DIVERSION OF WATER

1 GENERAL

1.1 SUMMARY

The work covered by this section of the specifications consists of furnishing all plant, labor, and materials and performing all work in connection with the control and diversion of the Woonasquatucket River, dewatering and control of subsurface water within cofferdams, control of water past or through work areas, and control of surface drainage. This work consists of installation and removal of temporary cofferdams and temporary site drainage facilities.

1.2 SUBMITTALS

The following shall be submitted in accordance with Section 01300 SUBMITTALS:

SD-01 Data

Product data for dewatering pumps, sumps, sedimentation tanks and other diversion control equipment.

2 PRODUCTS (NOT USED)

3 EXECUTION

3.1 PHASED CONSTRUCTION SCHEME

See Section 01010 SUMMARY OF WORK for requirements pertaining to the sequence of construction for this project.

3.1.1 Phase I

Phase I construction, includes repairs to the low level outlet, extension of the outlet downstream training wall and installation of a new sluice gate.

3.1.2 Phase II

Phase II construction, provides for construction of cofferdams to divert the Woonasquatucket River through the modified

SECTION 03100

STRUCTURAL CONCRETE FORMWORK

1 GENERAL

1.1 REFERENCES

The publications listed below form a part of this specification to the extent referenced. The publications are referred to in the text by basic designation only.

AMERICAN CONCRETE INSTITUTE (ACI)

ACI 347R	(1988) Guide to Formwork for Concrete

AMERICAN HARDBOARD ASSOCIATION (AHA)

AHA A135.4	(1982; R 1988) Basic Hardboard

AMERICAN SOCIETY FOR TESTING AND MATERIALS (ASTM)

ASTM C 578	(1992) Rigid, Cellular Polystyrene Thermal Insulation

DEPARTMENT OF COMMERCE (DOC)

DOC PS 1	(1983) Construction and Industrial Plywood

1.2 SUBMITTALS

The following shall be submitted in accordance with Section 01300 SUBMITTALS:

SD-01 Data

Design;

Design analysis and calculations for form design and methodology used in the design.

Concrete Formwork;

Manufacturer's data including literature describing form materials, accessories, and form releasing agents.

Textured Concrete Form Liner;

Manufacturer's data including literature describing form liner materials, accessories, and recommended releasing agents.

SD-04 Drawings

Concrete Formwork;.

Drawings showing details of formwork including, dimensions of fiber voids, joints, supports, studding and shoring, and sequence of form and shoring removal.

SD-06 Instructions

Form Releasing Agents;.

Manufacturer's recommendation on method and rate of application of form releasing agents.

1.3 DESIGN

Formwork shall be designed in accordance with methodology of ACI 347R for anticipated loads, lateral pressures, and stresses. Forms shall be capable of withstanding the pressures resulting from placement and vibration of concrete.

2 PRODUCTS

2.1 FORM MATERIALS

2.1.1 Forms For Class D Finish

All formed concrete surfaces shall be Class D finish, except where textured concrete is required on the exposed face of the stem of the concrete dam. Forms for Class D finished surfaces, except where concrete is placed against earth, shall be wood or steel or other approved concrete form material.

2.1.2 Textured Concrete Form Liner

Form liners for the exposed face of the stem of the dam shall create an Ashlar Stone Texture pattern with 3/4 inch by 3/4 inch joints. Units shall be factory fabricated elastomeric

form liners specifically designed for the construction of textured architectural concrete. Acceptable product is "Ashlar Stone #167" as manufactured by Scott Systems, Inc., 4575 Joliet Street, Denver, Colorado 80239, telephone number (303) 371-9580, or approved equal.

2.1.3 Form Ties

Form ties shall be factory-fabricated metal ties, shall be of the removable or internal disconnecting or snap-off type, and shall be of a design that will not permit form deflection and will not spall concrete upon removal. Solid backing shall be provided for each tie. Except where removable tie rods are used, ties shall not leave holes in the concrete surface less than 1/4 inch nor more than 1 inch deep and not more than 1 inch in diameter. Removable tie rods shall be not more than 1-1/2 inches in diameter.

2.1.4 Form Releasing Agents

Form releasing agents shall be commercial formulations that will not bond with, stain or adversely affect concrete surfaces. Agents shall not impair subsequent treatment of concrete surfaces depending upon bond or adhesion nor impede the wetting of surfaces to be cured with water or curing compounds. Form releasing agents shall not adversely affect the color or texture of the textured concrete on the exposed face of the dam stem.

3 EXECUTION

3.1 INSTALLATION

3.1.1 Formwork

Forms shall be mortar tight, properly aligned and adequately supported to produce concrete surfaces meeting the surface requirements specified in Section 03300 CAST-IN-PLACE STRUCTURAL CONCRETE. Where forms for continuous surfaces are placed in successive units, care shall be taken to fit the forms over the completed surface so as to obtain accurate alignment of the surface and to prevent leakage of mortar. Forms shall not be reused if there is any evidence of surface wear and tear or defects, which would impair the quality of the surface. Surfaces of forms to be reused shall be cleaned of mortar from previous concreting and of all other foreign

material before reuse. Form ties that are to be completely withdrawn shall be coated with a nonstaining bond breaker.

3.1.1 Textured Form Liners

Where textured form liners are used, the concrete texture shall not decrease the thickness of the wall section as required on the contract drawings. Therefore, the 3/4 inch by 3/4 inch joints in the form liner should extend outside of the required wall thickness and in no case should the form liner protrude into the structural section shown on the contract drawings.

3.2 COATING

Forms for Class D finished surfaces may be wet with water in lieu of coating immediately before placing concrete, except that in cold weather with probable freezing temperatures coating shall be mandatory. Surplus coating on form surfaces and coating on reinforcing steel and construction joints shall be removed before placing concrete.

3.3 REMOVAL OF FORMS

Forms shall be removed in a manner that will prevent injury to the concrete and ensure the complete safety of the structure. Formwork for columns, walls, side of beams and other parts not supporting the weight of concrete may be removed when the concrete has attained sufficient strength to resist damage from the removal operation but not before at least 24 hours has elapsed since concrete placement. Supporting forms and shores shall not be removed from beams, floors and walls until the structural units are strong enough to carry their own weight and any other construction or natural loads. In no case will supporting forms or shores be removed before the concrete strength has reached 70 percent of design strengths as determined by field cured cylinders or other approved methods. This strength shall be demonstrated by job-cured test specimens, and by a structural analysis considering the proposed loads in relation to these test strengths and the strength of forming and shoring system. The job-cured test specimens for form removal purposes shall be provided in numbers as directed and shall be in addition to those required for concrete quality control. The specimens shall be removed from molds at the age of 24 hours and shall receive, insofar as possible, the same curing, and protection as the structures they represent.

concrete gate structure. Phase II constructed of earth, precast concrete blocks, and precast concrete barriers. These cofferdams will be constructed to the elevations shown on the contract drawings. Provide slope protection and seepage control measures in accordance with the approved design. All remaining excavation and new construction to be performed within this cofferdammed area shall be performed during this phase, as specified in other sections of the specifications.

Approximately 350 cubic feet per second (cfs) can be discharged through the modified gate structure without overtopping the Phase II cofferdam. This discharge is between a 1-year (230 cfs) and a 2-year (590 cfs) frequency storm event. The table below presents monthly mean discharges at the centerdale gage, 0.7 miles upstream of the Allendale Dam.

MONTHLY MEAN DISCHARGE AT CENTERDALE GAGE
(0.7 mile upstream of Allendale Dam)
(Period of Record: Water Years 1941 - 1994)

Month	Oct	Nov	Dec	Jan	Feb	Mar
Mean (cfs)	38.6	58.4	84.5	92.0	103	142

Month	Apr	May	Jun	Jul	Aug	Sep
Mean (cfs)	131	86.3	55.5	31.1	29.5	30.0

3.2 DEWATERING

The areas within the cofferdams and all excavation areas therein shall be dewatered and maintained in a dry condition to the extent required to construct the work in accordance with all applicable provisions in other sections of the specifications.

3.3 EMERGENCY BREACHING AND REMOVAL OF COFFERDAMS

During all time periods when cofferdams and diversion systems are in operation, the Contractor shall provide and maintain at the site suitable equipment for the breaching of cofferdams and removal of equipment for the passage of flood flows. The breaching and removal of cofferdams shall be done only at the direction of, or with the approval of, the Engineer.

3.4 MAINTENANCE

The Contractor shall continuously monitor all cofferdams for evidence of movement, erosion, deterioration, and excessive

seepage throughout their use. The cofferdams and diversion channels shall be maintained in good working order as directed and as necessary for the safety of the workers and the protection of the permanent work.

SECTION 03200

CONCRETE REINFORCEMENT

PART 1 GENERAL

1.1 REFERENCES

The publications listed below form a part of this specification to the extent referenced. The publications are referred to in the text by basic designation only.

ACI INTERNATIONAL (ACI)

ACI 318/318R	(1995) Building Code Requirements for Structural Concrete and Commentary
ACI 318M	(1995) Building Code Requirements for Structural Concrete and Commentary (Metric)

AMERICAN SOCIETY FOR TESTING AND MATERIALS (ASTM)

ASTM A 53	(1999) Pipe, Steel, Black and Hot-Dipped, Zinc-Coated, Welded and Seamless
ASTM A 82	(1997a) Steel Wire, Plain, for Concrete Reinforcement
ASTM A 184/A 184M	(1996) Fabricated Deformed Steel Bar Mats for Concrete Reinforcement
ASTM A 185	(1997) Steel Welded Wire Fabric, Plain, for Concrete Reinforcement
ASTM A 496	(1997) Steel Wire, Deformed, for Concrete Reinforcement
ASTM A 497	(1997) Steel Welded Wire Fabric, Deformed, for Concrete Reinforcement
ASTM A 615/A 615M	(1996a) Deformed and Plain Billet-Steel Bars for Concrete Reinforcement

ASTM A 675/A 675M	(1990a; R 1995e1) Steel Bars, Carbon, Hot-Wrought, Special Quality, Mechanical Properties
ASTM A 706/A 706M	(1998) Low-Alloy Steel Deformed and Plain Bars for Concrete Reinforcement
ASTM A 767/A 767M	(1997) Zinc-Coated (Galvanized) Steel Bars in Concrete Reinforcement
ASTM A 775/A 775M	(1997e1) Epoxy-Coated Reinforcement Steel Bars
ASTM A 884/A 884M	(1996ae1) Epoxy-Coated Steel Wire and Welded Wire Fabric for Reinforcement
ASTM C 1116	(1995) Fiber-Reinforced Concrete and Shotcrete

AMERICAN WELDING SOCIETY (AWS)

AWS D1.4	(1998) Structural Welding Code - Reinforcing Steel

CONCRETE REINFORCING STEEL INSTITUTE (CRSI)

CRSI MSP-1	(1996) Manual of Standard Practice

1.2 SUBMITTALS

The following shall be submitted in accordance with Section 01330 SUBMITTAL PROCEDURES:

SD-02 Shop Drawings

Reinforcement

Detail drawings showing reinforcing steel placement, schedules, sizes, grades, and splicing and bending details. Drawings shall show support details including types, sizes and spacing.

SD-03 Product Data

Welding

A list of qualified welders names.

SD-07 Certificates

Reinforcing Steel

Certified copies of mill reports attesting that the reinforcing steel furnished contains no less than 25 percent recycled scrap steel and meets the requirements specified herein, prior to the installation of reinforcing steel.

1.3 WELDING

Welders shall be qualified in accordance with AWS D1.4. Qualification test shall be performed at the worksite and the Contractor shall notify the Contracting Officer 24 hours prior to conducting tests. Special welding procedures and welders qualified by others may be accepted as permitted by AWS D1.4.

1.4 DELIVERY AND STORAGE

Reinforcement and accessories shall be stored off the ground on platforms, skids, or other supports.

PART 2 PRODUCTS

2.1 DOWELS

Dowels shall conform to ASTM A 675/A 675M, Grade 80. Steel pipe conforming to ASTM A 53, Schedule 80, may be used as dowels provided the ends are closed with metal or plastic inserts or with mortar.

2.2 FABRICATED BAR MATS

Fabricated bar mats shall conform to ASTM A 184/A 184M.

2.3 REINFORCING STEEL

Reinforcing steel shall be deformed bars conforming to ASTM A 615/A 615M or ASTM A 706/A 706M, grades and sizes as indicated. Cold drawn wire used for spiral reinforcement shall conform to ASTM A 82. In highly corrosive environments or when directed by the Engineer, reinforcing steel shall conform to ASTM A 767/A 767M or ASTM A 775/A 775M as appropriate.

2.4 WELDED WIRE FABRIC

Welded wire fabric shall conform to [ASTM A 185] [ASTM A 496] [ASTM A 497]. When directed by the Contracting Officer for special applications, welded wire fabric shall conform to ASTM A 884/A 884M.

2.5 WIRE TIES

Wire ties shall be 16 gauge or heavier black annealed steel wire.

2.6 SUPPORTS

Bar supports for formed surfaces shall be designed and fabricated in accordance with CRSI MSP-1 and shall be steel or precast concrete blocks. Precast concrete blocks shall have wire ties and shall be not less than 4 inches square when supporting reinforcement on ground. Precast concrete block shall have compressive strength equal to that of the surrounding concrete. Where concrete formed surfaces will be exposed to weather or where surfaces are to be painted, steel supports within 1/2 inch of concrete surface shall be galvanized, plastic protected or of stainless steel. Concrete supports used in concrete exposed to view shall have the same color and texture as the finish surface. For slabs on grade, supports shall be precast concrete blocks, plastic coated steel fabricated with bearing plates, or specifically designed wire-fabric supports fabricated of plastic.

2.7 SYNTHETIC FIBER REINFORCEMENT

Synthetic fiber shall be polypropylene with a denier less than 100 and a nominal fiber length of 2 inches.

PART 3 EXECUTION

3.1 REINFORCEMENT

Reinforcement shall be fabricated to shapes and dimensions shown and shall conform to the requirements of ACI 318/318R. Reinforcement shall be cold bent unless otherwise authorized. Bending may be accomplished in the field or at the mill. Bars shall not be bent after embedment in concrete. Safety caps shall be placed on all exposed ends of vertical concrete reinforcement bars that pose a danger to life safety. Wire tie ends shall face away from the forms.

3.1.1 Placement

Reinforcement shall be free from loose rust and scale, dirt, oil, or other deleterious coating that could reduce bond with the concrete. Reinforcement shall be placed in accordance with ACI 318/318R at locations shown plus or minus one bar diameter. Reinforcement shall not be continuous through expansion joints and shall be as indicated through construction or contraction joints. Concrete coverage shall be as indicated or as required by ACI 318/318R. If bars are moved more than one bar diameter to avoid interference with other reinforcement, conduits or embedded items, the resulting arrangement of bars, including additional bars required to meet structural requirements, shall be approved before concrete is placed.

3.1.2 Splicing

Splices of reinforcement shall conform to ACI 318/318R and shall be made only as required or indicated. Splicing shall be by lapping or by mechanical or welded butt connection; except that lap splices shall not be used for bars larger than No. 11 unless otherwise indicated. Welding shall conform to AWS D1.4. Welded butt splices shall be full penetration butt welds. Lapped bars shall be placed in contact and securely tied or spaced transversely apart to permit the embedment of the entire surface of each bar in concrete. Lapped bars shall not be spaced farther apart than one-fifth the required length of lap or 6 inches. Mechanical butt splices shall be in accordance with the recommendation of the manufacturer of the mechanical splicing device. Butt splices shall develop 125 percent of the specified minimum yield tensile strength of the spliced bars or of the smaller bar in transition splices. Bars shall be flame dried before butt splicing. Adequate jigs and clamps or other devices shall be provided to support, align, and hold the longitudinal centerline of the bars to be butt spliced in a straight line.

3.2 DOWEL INSTALLATION

Dowels shall be installed in slabs on grade at locations indicated and at right angles to joint being doweled. Dowels shall be accurately positioned and aligned parallel to the finished concrete surface before concrete placement. Dowels shall be rigidly supported during concrete placement. One end of dowels shall be coated with a bond breaker.

SECTION 03250

EXPANSION JOINTS, CONTRACTION JOINTS, AND WATERSTOPS

1 GENERAL

1.1 REFERENCES

The publications listed below form a part of this specification to the extent referenced. The publications are referred to in the text by basic designation only.

AMERICAN HARDBOARD ASSOCIATION (AHA)

AHA A135.4	(1982; R 1988) Basic Hardboard

AMERICAN SOCIETY FOR TESTING AND MATERIALS (ASTM)

ASTM A 109	(1993) Steel, Strip, Carbon, Cold-Rolled
ASTM A 167	(1993) Stainless and Heat-Resisting Chromium-Nickel Steel Plate, Sheet, and Strip
ASTM A 480	(1994b) General Requirements for Flat-Rolled Stainless and Heat-Resisting Steel Plate, Sheet, and Strip
ASTM A 570	(1992; R 1993) Steel, Sheet and Strip, Carbon, Hot-Rolled, Structural Quality
ASTM B 152	(1993a) Copper Sheet, Strip, Plate, and Rolled Bar
ASTM B 370	(1992) Copper Sheet and Strip for Building Construction
ASTM C 919	(1984; R 1992) Standard Practice for Use of Sealants in Acoustical Applications
ASTM C 920	(1987) Elastomeric Joint Sealants
ASTM D 412	(1992) Vulcanized Rubber and Thermoplastic Rubbers and Thermoplastic Elastomers - Tension

ASTM D 471	(1979; R 1991) Rubber Property - Effect of Liquids
ASTM D 624	(1991) Test Method for Rubber Property - Tear Resistance
ASTM D 1190	(1974; R 1980) Concrete Joint Sealer, Hot-Poured Elastic Type
ASTM D 1191	(1984) Testing Concrete Joint Sealers
ASTM D 1751	(1983; R 1991) Preformed Expansion Joint Filler for Concrete Paving and Structural Construction (Nonextruding and Resilient Bituminous Types)
ASTM D 1752	(1984; R 1992) Preformed Sponge Rubber and Cork Expansion Joint Fillers for Concrete Paving and Structural Construction
ASTM D 1854	(1974; R 1990) Jet-Fuel-Resistant Concrete Joint Sealer, Hot-Poured Elastic Type
ASTM D 1855	(1989) Test Method for Jet-Fuel Resistant Concrete Joint Sealer, Hot-Poured Elastic Type
ASTM D 2240	(1991) Test Method for Rubber Property - Durometer Hardness
ASTM D 2628	(1991) Preformed Polychloroprene Elastomeric Joint Seals for Concrete Pavements
ASTM D 2835	(1989; R 1993) Lubricant for Installation of Preformed Compression Seals in Concrete Pavements
ASTM D 5249	(1992) Backer Material for Use With Cold and Hot-Applied Joint Sealants in Portland-Cement Concrete and Asphalt Joints

CORPS OF ENGINEERS (COE)

COE CRD-C 513	(1974) Corps of Engineers Specifications for Rubber Waterstops
COE CRD-C 572	(1974) Corps of Engineers Specifications for Polyvinylchloride Waterstops

FEDERAL SPECIFICATIONS (FS)

FS TT-S-230	(1970) Sealing Compound: Elastomeric Type, Single Component (for Calking, Sealing, and Glazing in Buildings and Other Structures)

1.2 SUBMITTALS

The following shall be submitted in accordance with Section 01300 SUBMITTALS:

SD-01 Data.

Preformed Compressible Joint Filler

Sealant

Waterstops

Manufacturer's literature, including safety data sheets, for preformed fillers and the lubricants used in their installation; field-molded sealants and primers (when required by sealant manufacturer); preformed compression seals; and waterstops.

SD-04 Drawings.

Waterstops

Shop drawings and fabrication drawings provided by the manufacturer or prepared by the Contractor for each type used.

SD-06 Instructions.

Preformed Compressible Joint Filler

Sealant

Waterstops

Manufacturer's recommended instructions for installing preformed fillers, field-molded sealants; preformed compression seals; and waterstops; and for splicing non-metallic waterstops.

SD-13 Certificates.

Preformed Compressible Joint Filler

Sealant

Waterstops

Certificates of compliance stating that the joint filler and sealant materials and waterstops conform to the requirements specified.

SD-14 Samples

PVC and Expanding Waterstops and Splices

Specimens identified to indicate manufacturer, type of material, size, quantity of material, and shipment or lot represented. Each sample shall be a piece not less than 12 inch long from each type used. One splice sample of each size and type. The splice samples shall be made using straight run pieces with the splice located at the mid-length of the sample and finished as required for the installed waterstop. The total length of each splice shall be not less than 12 inches long.

1.3 DELIVERY AND STORAGE

Material delivered and placed in storage shall be stored off the ground and protected from moisture, dirt, and other contaminants. Sealants shall be delivered in the manufacturer's original unopened containers. Sealants whose shelf life has expired shall be removed from the site.

2 PRODUCTS

2.1 PREFORMED COMPRESSIBLE JOINT FILLER

Compressible joint filler shall be preformed material conforming to ASTM D 1751 or ASTM D 1752. Unless otherwise indicated, filler material shall be 3/4 inch thick and of a width applicable for the joint formed. Backer material, when required, shall conform to ASTM D 5249.

2.2 SEALANT

Joint sealant shall conform to the following:

2.2.1 Polyurethane Elastomeric Sealant

Polyurethane elastomeric sealant shall be a one-component, polyurethane base material applicable for use in horizontal, vertical, and overhead joints. Sealant shall cure under the influence of atmospheric moisture to form an elastomeric substance. Sealant color shall match that of the concrete surface.

2.2.2 Sealant Performance Criteria

2.2.2.1 Tensile Properties

Tensil properties (ASTM D 412) at 21 days

a.	Tensile Strength	140 psi, min.
b.	Elongation at Break	600%, min.
c.	Tensile Stress @ 100% Elongation	65 psi, min.
d.	Tensile set after break	15%, max.

2.2.2.2 Shore Hardness

Shore hardness (ASTM D 2240) @ 21 days: 50, max (Shore A)

2.2.2.3 Tear Strength

Tear strength (ASTM D 624) @ 21 days: 60 lbf/inch, min.

2.2.2.4 Adhesion in Peel

Adhesion in peel (FS TT-S-230) @ 28 days

a. Concrete 20 lb., min.

b. Aluminum 20 lb., min.
c. Glass 20 lb., min.

2.2.2.5 Service Range

Service Range - 40 F to 167 F, min.

2.2.2.6 Sealant

a) Sealant shall conform to FS TT-S-230, Type II, Class A.

b) Sealant shall conform to ASTM C 920, Type S, Grade NS, Class 25.

c) Sealant shall be non-staining.

2.2.2.7 Acceptable Product

Acceptable product shall be Sikaflex 1A as manufactured by Sika Corporation, or approved equal.

2.3 PRIMER AND BACKER ROD

Primer and backer rod for elastomeric sealant shall be as shown or recommended by the sealant manufacturer.

2.4 WATERSTOPS

Intersection and change of direction waterstops shall be shop fabricated.

2.4.1 PVC Waterstops

PVC waterstops shall be manufactured from a prime virgin resin; the compound shall contain plasticizers, stabilizers, and other additives to meet specified requirements. Polyvinylchloride waterstops shall conform to COE CRD-C 572.

2.4.2 Expanding Waterstop

Expanding waterstop system shall consist of a hydro-active, expansive, closed cell polyurethane foam that is injected into the joint after the concrete has cured. Acceptable product shall be "Injecto-System" as manufactured by De-Neef Construction Chemicals, P.O. Box 1219, Waller, Texas 77484, or approved equal.

3 EXECUTION

3.1 JOINTS

Joints shall be installed at locations indicated and as shown on the contract drawings.

3.1.1 Expansion Joints

Preformed compressible joint filler shall be used in expansion joints as shown on the contract drawings. The edges of the joint shall be neatly finished with an edging tool of 1/8 inch radius. The filler strips shall be installed at the proper level beneath the finished surface with a slightly tapered, dressed and oiled wood strip temporarily secured to the top thereof to form a recess to the size shown on the drawings. The wood strip shall be removed after the concrete has set. Contractor may opt to use a removable expansion filler cap designed and fabricated for this purpose in lieu of the wood strip. The groove shall be thoroughly cleaned of laitance, curing compound, foreign materials, protrusions of hardened concrete, and any dust which shall be blown out of the groove with oil-free compressed air.

3.1.2 Joint Sealant

Construction joints and expansion joints in the Dam shall be filled with elastomeric joint sealant and backer rod. Joint surfaces shall be clean, dry, and free of oil or other foreign material which would adversely affect the bond between sealant and concrete. Joint sealant shall be applied as recommended by the manufacturer of the sealant.

3.1.2.1 Joints With Field-Molded Sealant

Joints shall not be sealed when the sealant material, ambient air, or concrete temperature is less than 40 degrees F.. Joints shall be primed and filled flush with joint sealant in accordance with the manufacturer's recommendations.

3.2 WATERSTOPS, INSTALLATION AND SPLICES

Waterstops shall be installed at the locations shown to form a continuous water-tight diaphragm. Adequate provision shall be made to support and completely protect the waterstops during the progress of the work. Any waterstop punctured or damaged shall be repaired or replaced. Exposed waterstops shall be

protected during application of form release agents to avoid being coated. Suitable guards shall be provided to protect exposed projecting edges and ends of partially embedded waterstops from damage when concrete placement has been discontinued. Splices shall be made by certified trained personnel using approved equipment and procedures.

3.2.1 PVC Waterstops

Fittings shall be shop made using a machine specifically designed to mechanically weld the waterstop. A miter guide, proper fixturing (profile dependant), and portable power saw shall be used to miter cut the ends to be joined to ensure good alignment and contact between joined surfaces. The splicing of straight lengths shall be done by squaring the ends to be joined. Continuity of the characteristic features of the cross section of the waterstop (ribs, tabular center axis, protrusions, etc.) shall be maintained across the splice.

3.2.1.1 Polyvinyl Chloride Waterstop

Splices shall be made by heat sealing the adjacent waterstop edges together using a thermoplastic splicing iron utilizing a non-stick surface specifically designed for waterstop welding. The correct temperature shall be used to sufficiently melt without charring the plastic. The spliced area, when cooled, shall show no signs of separation, holes, or other imperfections when bent by hand in as sharp an angle as possible.

3.2.1.2 Quality Assurance

Edge welding will not be permitted. Centerbulbs shall be compressed or closed when welding to non-centerbulb type. Waterstop splicing defects which are unacceptable include, but are not limited to the following: 1) Tensile strength less than 80 percent of parent section. 2) Free lap joints. 3) Misalignment of centerbulb, ribs, and end bulbs greater than 1/16 inch. 4) Misalignment which reduces waterstop cross section more than 15 percent. 5) Bond failure at joint deeper than 1/16 inch or 15 percent of material thickness. 6) Misalignment of waterstop splice resulting in misalignment of waterstop in excess of 1/2 inch in 10 feet. 7) Visible porosity in the weld area, including pin holes. 8) Charred or burnt material. 9) Bubbles or inadequate bonding. 10) Visible signs of splice separation when cooled splice is bent by hand at a sharp angle.

3.2.1 Expanding Waterstop

The expanding waterstop system used at the existing gate structure shall be installed in accordance with the manufacturer's instructions.

SECTION 03300

CAST-IN-PLACE STRUCTURAL CONCRETE

1 GENERAL

1.1 REFERENCES

The publications listed below form a part of this specification to the extent referenced. The publications are referred to in the text by basic designation only.

AMERICAN ASSOCIATION OF STATE HIGHWAY AND TRANSPORTATION OFFICIALS (AASHTO)

AASHTO M 182	(1991I) Burlap Cloth Made From Jute or Kenaf

AMERICAN CONCRETE INSTITUTE (ACI)

ACI 117/A117R	(1990; Errata) Standard Tolerances for Concrete Construction and Materials
ACI 211.1	(1991) Standard Practice for Selecting Proportions for Normal, Heavyweight, and Mass Concrete
ACI 211.2	(1991) Standard Practice for Selecting Proportions for Structural Lightweight Concrete
ACI 213R	(1987) Guide for Structural Lightweight Aggregate Concrete
ACI 214.3R	(1988) Simplified Version of the Recommended Practice for Evaluation of Strength Test Results of Concrete
ACI 301	(1989) Structural Concrete for Buildings
ACI 303R	(1991) Guide to Cast-In-Place Architectural Concrete Practice
ACI 305R	(1991) Hot Weather Concreting

ACI 318/318R	(1989; Rev 1992; Errata) Building Code Requirements for Reinforced Concrete

AMERICAN SOCIETY FOR TESTING AND MATERIALS (ASTM)

ASTM C 31	(1991) Making and Curing Concrete Test Specimens in the Field
ASTM C 33	(1993) Concrete Aggregates
ASTM C 39	(1993a) Compressive Strength of Cylindrical Concrete Specimens
ASTM C 42	(1990) Obtaining and Testing Drilled Cores and Sawed Beams of Concrete
ASTM C 78	(1994) Flexural Strength of Concrete (Using Simple Beam With Third-Point Loading)
ASTM C 94	(1994) Ready-Mixed Concrete
ASTM C 131	(1989) Resistance to Degradation of Small-Size Coarse Aggregate by Abrasion and Impact in the Los Angeles Machine
ASTM C 136	(1993) Sieve Analysis of Fine and Coarse Aggregates
ASTM C 143	(1990a) Slump of Hydraulic Cement Concrete
ASTM C 150	(1994) Portland Cement
ASTM C 171	(1992) Sheet Materials for Curing Concrete
ASTM C 172	(1990) Sampling Freshly Mixed Concrete
ASTM C 173	(1994a) Air Content of Freshly Mixed Concrete by the Volumetric Method
ASTM C 192	(1990a) Making and Curing Concrete Test Specimens in the Laboratory

ASTM C 231	(1991b) Air Content of Freshly Mixed Concrete by the Pressure Method
ASTM C 260	(1994) Air-Entraining Admixtures for Concrete
ASTM C 309	(1993) Liquid Membrane-Forming Compounds for Curing Concrete
ASTM C 330	(1989) Lightweight Aggregates for Structural Concrete
ASTM C 494	(1992) Chemical Admixtures for Concrete
ASTM C 496	(1990) Splitting Tensile Strength of Cylindrical Concrete Specimens
ASTM C 552	(1991) Cellular Glass Thermal Insulation
ASTM C 567	(1991) Unit Weight of Structural Lightweight Concrete
ASTM C 578	(1992) Rigid, Cellular Polystyrene Thermal Insulation
ASTM C 591	(1985) Unfaced Preformed Rigid Cellular Polyurethane Thermal Insulation
ASTM C 595	(1994a) Blended Hydraulic Cements
ASTM C 618	(1994) Coal Fly Ash and Raw or Calcined Natural Pozzolan for Use as a Mineral Admixture in Portland Cement Concrete
ASTM C 685	(1994) Concrete Made by Volumetric Batching and Continuous Mixing
ASTM C 881	(1990) Epoxy-Resin-Base Bonding Systems for Concrete
ASTM C 937	(1980, R 1991) Grout Fluidifier for Preplaced-Aggregate Concrete

ASTM C 940	(1989) Expansion and Bleeding of Freshly Mixed Grouts for Preplaced-Aggregate Concrete in the Laboratory
ASTM C 989	(1993) Ground Granulated Blast-Furnace Slag for Use in Concrete and Mortars
ASTM C 1017	(1992) Chemical Admixtures for Use in Producing Flowing Concrete
ASTM C 1059	(1991) Latex Agents for Bonding Fresh to Hardened Concrete
ASTM C 1064	(1986, R 1993) Temperature of Freshly Mixed Portland Cement Concrete
ASTM C 1077	(1995) Standard Practice for Laboratories Testing Concrete and Concrete Aggregates for Use in Construction and Criteria for Laboratory Evaluation
ASTM C 1107	(1991a) Packaged Dry, Hydraulic-Cement Grout (Nonshrink)
ASTM C 1116	(1991) Fiber-Reinforced Concrete and Shotcrete
ASTM C 1240	(1993) Silica Fume for Use in Hydraulic Cement Concrete and Mortar
ASTM D 75	(1987; R 1992) Sampling Aggregates
ASTM D 1751	(1983; R 1991) Preformed Expansion Joint Filler for Concrete Paving and Structural Construction (Nonextruding and Resilient Bituminous Types)
ASTM D 1752	(1984; R 1992) Preformed Sponge Rubber and Cork Expansion Joint Fillers for Concrete Paving and Structural Construction
ASTM E 96	(1994) Water Vapor Transmission of Materials

ASTM E 1155	(1987) Determining Floor Flatness and Levelness Using the F-Number System

CORPS OF ENGINEERS (COE)

COE CRD-C 94	(1995) Surface Retarders
COE CRD-C 104	(1980) Method of Calculation of the Fineness Modulus of Aggregate
COE CRD-C 400	(1963) Requirements for Water for Use in Mixing or Curing Concrete
COE CRD-C 521	(1981) Standard Test Method for Frequency and Amplitude of Vibrators for Concrete
COE CRD-C 540	(1971; R 1981) Standard Specification for Nonbituminous Inserts for Contraction Joints in Portland Cement Concrete Airfield Pavements, Sawable Type
COE CRD-C 572	(1974) Corps of Engineers Specifications for Polyvinylchloride Waterstop

NATIONAL INSTITUTE OF STANDARDS AND TECHNOLOGY (NIST)

NIST HB 44	(1994) NIST Handbook 44: Specifications, Tolerances, and Other Technical Requirements for Weighing and Measuring Devices

NATIONAL READY-MIXED CONCRETE ASSOCIATION (NRMCA)

NRMCA-01	(1992) Truck Mixer Agitator and Front Discharge Concrete Carrier Standards of the Truck Mixer Manufacturers Bureau
NRMCA CPMB 100	(1990) Concrete Plant Standards
NRMCA QC 3	(1984) Quality Control Manual: Section 3, Plant Certifications Checklist: Certification of Ready Mixed Concrete Production Facilities

1.2 SUBMITTALS

The following shall be submitted in accordance with Section 01300 SUBMITTALS:

SD-08 Statements

Mixture Proportions

The results of trial mixture design studies along with a statement giving the maximum nominal coarse aggregate size and the proportions of ingredients that will be used in the manufacture of concrete, at least 14 days prior to commencing concrete placing operations. Aggregate weights shall be based on the saturated surface dry condition. The statement shall be accompanied by test results from an approved independent commercial testing laboratory, showing that mixture design studies have been made with materials proposed for the project and that the proportions selected will produce concrete of the qualities indicated. No substitutions shall be made in the materials used in the mixture design studies without additional tests to show that the quality of the concrete is satisfactory.

SD-09 Reports

Testing and Inspection for Contractor Quality Control

Certified copies of laboratory test reports, including mill tests and all other test data, for portland cement, blended cement, pozzolan, ground granulated blast furnace slag, silica fume, aggregate, admixtures, and curing compound proposed for use on this project.

1.3 GENERAL REQUIREMENTS

1.3.1 Tolerances

Except as otherwise specified herein, tolerances for concrete batching, mixture properties, and construction as well as definition of terms and application practices shall be in accordance with ACI 117/A117R. Level and grade tolerance measurements of slabs shall be made as soon as possible after finishing; when forms or shoring are used, the measurements shall be made prior to removal.

1.3.2 Strength Requirements and w/c Ratio

1.3.2.1 Strength Requirements

Specified compressive strength (f'c) for all concrete shall be 5000 pounds per square inch (psi) at 28 days.

1.3.2.2 Water-Cement Ratio

Maximum water-cement ratio (w/c) for all concrete shall be 0.40 by weight.

1.3.3 Air Entrainment

All concrete shall be air entrained to contain between 4 and 7 percent total air, except that when the nominal maximum size coarse aggregate is 3/4 inch or smaller it shall be between 4.5 and 7.5 percent. Specified air content shall be attained at point of placement into the forms. Air content for normal weight concrete shall be determined in accordance with ASTM C 231.

1.3.4 Slump

Slump of the concrete, as delivered to the point of placement into the forms, shall be 1 to 4 inches. Slump shall be determined in accordance with ASTM C 143.

1.3.5 Concrete Temperature

The temperature of the concrete as delivered shall not exceed 90 degrees F. When the ambient temperature during placing is 40 degrees F or less, or is expected to be at any time within 6 hours after placing, the temperature of the concrete as delivered shall be between 55 and 75 degrees F.

1.3.6 Size of Coarse Aggregate

The largest feasible nominal maximum size aggregate (NMSA) specified in paragraph AGGREGATES shall be used in each placement. However, nominal maximum size of aggregate shall not exceed any of the following: three-fourths of the minimum cover for reinforcing bars, three-fourths of the minimum clear spacing between reinforcing bars, one-fifth of the narrowest dimension between sides of forms, or one-third of the thickness of slabs or toppings.

1.3.7 Special Properties and Products

Concrete may contain admixtures other than air entraining agents, such as water reducers, superplasticizers, or set retarding agents to provide special properties to the concrete, if specified or approved. Any of these materials to be used on the project shall be used in the mix design studies.

1.4 MIXTURE PROPORTIONS

Concrete shall be composed of portland cement, other cementitious and pozzolanic materials as specified, aggregates, water and admixtures as specified.

1.4.1 Fresh Concrete

Fresh concrete will be sampled as delivered in accordance with ASTM C 172 and tested in accordance with these specifications, as considered necessary.

2 PRODUCTS

2.1 CEMENTITIOUS MATERIALS

Cementitious Materials shall be portland cement or portland cement in combination with pozzolan and shall conform to appropriate specifications listed below. Use of cementitious materials in concrete which will have surfaces exposed in the completed structure shall be restricted so there is no change in color, source, or type of cementitious material.

2.1.1 Portland Cement

ASTM C 150, Type I with a maximum 15 percent amount of tricalcium aluminate, or Type II.

2.2 AGGREGATES

Aggregates shall conform to the following.

2.2.1 Fine Aggregate

Fine aggregate shall conform to the quality and gradation requirements of ASTM C 33.

2.2.2 Coarse Aggregate

Coarse aggregate shall conform to ASTM C 33. Maximum coarse aggregate size shall be 3/4 inch.

2.3 CHEMICAL ADMIXTURES

Chemical admixtures, when required or permitted, shall conform to the appropriate specification listed. Admixtures shall be furnished in liquid form and of suitable concentration for easy, accurate control of dispensing.

2.3.1 Air-Entraining Admixture

ASTM C 260 and shall consistently entrain the air content in the specified ranges under field conditions.

2.3.2 Accelerating Admixture

ASTM C 494, Type C or E, except that calcium chloride or admixtures containing calcium chloride shall not be used.

2.3.3 Water-Reducing or Retarding Admixture

ASTM C 494, Type A, B, or D, except that the 6-month and 1-year compressive and flexural strength tests are waived.

2.3.4 Other Chemical Admixtures

Chemical admixtures for use in producing flowing concrete shall comply with ASTM C 1017, Type I or II. These admixtures shall be used only when approved in writing, such approval being contingent upon particular mixture control as described in the Contractor's Quality Control Plan and upon performance of separate mixture design studies.

2.4 CURING MATERIALS

2.4.1 Impervious-Sheet

Impervious-sheet materials shall conform to ASTM C 171, type optional, except, that polyethylene sheet shall not be used.

2.4.2 Burlap and Cotton Mat

Burlap and cotton mat used for curing shall conform to AASHTO M 182.

2.5 WATER

Water for mixing and curing shall be fresh, clean, potable, and free of injurious amounts of oil, acid, salt, or alkali, except that non-potable water may be used if it meets the requirements of COE CRD-C 400.

2.6 LATEX BONDING AGENT

Latex agents for bonding fresh to hardened concrete shall conform to ASTM C 1059.

2.7 EPOXY RESIN

Epoxy resins for use in repairs shall conform to ASTM C 881, Type V, Grade 2. Class as appropriate to the existing ambient and surface temperatures.

2.8 JOINT MATERIALS

2.8.1 Joint Fillers, Sealers, and Waterstops

Materials for joints shall be in accordance with Section 03250 EXPANSION JOINTS, CONSTRUCTION JOINTS, AND WATERSTOPS.

3 EXECUTION

3.1 PREPARATION FOR PLACING

Before commencing concrete placement, the following shall be performed. Surfaces to receive concrete shall be clean and free from frost, ice, mud, and water. Forms shall be in place, cleaned, coated, and adequately supported, in accordance with Section 03100 STRUCTURAL CONCRETE FORMWORK. Reinforcing steel shall be in place, cleaned, tied, and adequately supported, in accordance with Section 03200 CONCRETE REINFORCEMENT. Transporting and conveying equipment shall be in-place, ready for use, clean, and free of hardened concrete and foreign material. Equipment for consolidating concrete shall be at the placing site and in proper working order. Equipment and material for curing and for protecting concrete from weather or mechanical damage shall be at the placing site, in proper working condition and in sufficient amount for the entire placement. When hot, windy conditions during concreting appear probable, equipment and material shall be at the placing site to provide windbreaks, shading, fogging, or other action

to prevent plastic shrinkage cracking or other damaging drying of the concrete.

3.1.1 Foundations

3.1.1.1 Preparation of Rock

Rock surfaces upon which concrete is to be placed shall be excavated and prepared in accordance with Section 02228 EXCAVATION.

3.2 TRANSPORTING CONCRETE TO PROJECT SITE

Concrete shall be transported to the placing site in truck mixers or by approved pumping equipment. Nonagitating equipment, other than pumps, shall not be used for transporting lightweight aggregate concrete.

3.3 CONVEYING CONCRETE ON SITE

Concrete shall be conveyed from mixer or transporting unit to forms as rapidly as possible and within the time interval specified by methods which will prevent segregation or loss of ingredients using following equipment. Conveying equipment shall be cleaned before each placement.

3.3.1 Trucks

Truck mixers operating at agitating speed or truck agitators used for transporting plant-mixed concrete shall conform to the requirements of ASTM C 94. Nonagitating equipment shall be used only for transporting plant-mixed concrete over a smooth road and when the hauling time is less than 15 minutes. Bodies of nonagitating equipment shall be smooth, watertight, metal containers specifically designed to transport concrete, shaped with rounded corners to minimize segregation, and equipped with gates that will permit positive control of the discharge of the concrete.

3.3.2 Chutes

When concrete can be placed directly from a truck mixer, agitator, or nonagitating equipment, the chutes normally attached to this equipment by the manufacturer may be used. A discharge deflector shall be used when required by the Contracting Officer. Separate chutes and other similar equipment will not be permitted for conveying concrete.

3.3.3 Concrete Pumps

Concrete may be conveyed by positive displacement pump when approved. The pumping equipment shall be piston or squeeze pressure type; pneumatic placing equipment shall not be used. The pipeline shall be rigid steel pipe or heavy-duty flexible hose. The inside diameter of the pipe shall be at least 3 times the nominal maximum-size coarse aggregate in the concrete mixture to be pumped but not less than 4 inches. Aluminum pipe shall not be used.

3.4 PLACING CONCRETE

Mixed concrete shall be discharged within 1-1/2 hours or before the mixer drum has revolved 300 revolutions, whichever comes first after the introduction of the mixing water to the cement and aggregates. When the concrete temperature exceeds 85 degrees F, the time shall be reduced to 45 minutes. Concrete shall be placed within 15 minutes after it has been discharged from the transporting unit. Concrete shall be handled from mixer or transporting unit to forms in a continuous manner until the approved unit of operation is completed. Adequate scaffolding, ramps and walkways shall be provided so that personnel and equipment are not supported by in-place reinforcement. Placing will not be permitted when the sun, heat, wind, or limitations of facilities furnished by the Contractor prevent proper consolidation, finishing and curing. Sufficient placing capacity shall be provided so that concrete can be kept free of cold joints.

3.4.1 Depositing Concrete

Concrete shall be deposited as close as possible to its final position in the forms, and there shall be no vertical drop greater than 5 feet except where suitable equipment is provided to prevent segregation and where specifically authorized. Depositing of the concrete shall be so regulated that it will be effectively consolidated in horizontal layers not more than 12 inches thick, except that all slabs shall be placed in a single layer. Concrete to receive other construction shall be screeded to the proper level. Concrete shall be deposited continuously in one layer or in layers so that fresh concrete is deposited on in-place concrete that is still plastic. Fresh concrete shall not be deposited on concrete that has hardened sufficiently to cause formation of seams or planes of weakness within the section. Concrete that has surface dried, partially hardened, or contains foreign material shall not be used. When

temporary spreaders are used in the forms, the spreaders shall be removed as their service becomes unnecessary. Concrete shall not be placed in slabs over columns and walls until concrete in columns and walls has been in-place at least two hours or until the concrete begins to lose its plasticity. Concrete for beams, girders, brackets, column capitals, haunches, and drop panels shall be placed at the same time as concrete for adjoining slabs.

3.4.2 Consolidation

Immediately after placing, each layer of concrete shall be consolidated by internal vibrators, except for slabs 4 inches thick or less. The vibrators shall at all times be adequate in effectiveness and number to properly consolidate the concrete; a spare vibrator shall be kept at the jobsite during all concrete placing operations. The vibrators shall have a frequency of not less than 10,000 vibrations per minute, an amplitude of at least 0.025 inch, and the head diameter shall be appropriate for the structural member and the concrete mixture being placed. Vibrators shall be inserted vertically at uniform spacing over the area of placement. The distance between insertions shall be approximately 1-1/2 times the radius of action of the vibrator so that the area being vibrated will overlap the adjacent just-vibrated area by a reasonable amount. The vibrator shall penetrate rapidly to the bottom of the layer and at least 6 inches into the preceding layer if there is such. Vibrator shall be held stationary until the concrete is consolidated and then vertically withdrawn slowly while operating. Form vibrators shall not be used unless specifically approved and unless forms are constructed to withstand their use. Vibrators shall not be used to move concrete within the forms. Slabs 4 inches and less in thickness shall be consolidated by properly designed vibrating screeds or other approved technique. Excessive vibration of lightweight concrete resulting in segration or flotation of coarse aggregate shall be prevented. Frequency and amplitude of vibrators shall be determined in accordance with COE CRD-C 521. Grate tampers ("jitterbugs") shall not be used.

3.4.3 Hot Weather Requirements

When the ambient temperature during concrete placing is expected to exceed 85 degrees F, the concrete shall be placed

and finished with procedures previously submitted and as specified herein. The concrete temperature at time of delivery to the forms shall not exceed the temperature shown in the table below when measured in accordance with ASTM C 1064. Cooling of the mixing water or aggregates or placing concrete in the cooler part of the day may be required to obtain an adequate placing temperature. A retarder may be used, as approved, to facilitate placing and finishing. Steel forms and reinforcements shall be cooled as approved prior to concrete placement when steel temperatures are greater than 120 degrees F. Conveying and placing equipment shall be cooled if necessary to maintain proper concrete-placing temperature.

Maximum Allowable Concrete Placing Temperature

Relative Humidity, Percent, During Time of Concrete Placement	Maximum Allowable Concrete Temperature Degrees
Greater than 60	90 F
40-60	85 F
Less than 40	80 F

3.4.4 Prevention of Plastic Shrinkage Cracking

During hot weather with low humidity, and particularly with appreciable wind, as well as interior placements when space heaters produce low humidity, the Contractor shall be alert to the tendency for plastic shrinkage cracks to develop and shall institute measures to prevent this. Particular care shall be taken if plastic shrinkage cracking is potentially imminent and especially if it has developed during a previous placement. Periods of high potential for plastic shrinkage cracking can be anticipated by use of Fig. 2.1.5 of ACI 305R. In addition the concrete placement shall be further protected by erecting shades and windbreaks and by applying fog sprays of water, sprinkling, ponding or wet covering. Plastic shrinkage cracks that occur shall be filled by injection of epoxy resin as directed, after the concrete hardens. Plastic shrinkage cracks shall never be troweled over or filled with slurry.

3.4.5 Placing Flowable Concrete

If a plasticizing admixture conforming to ASTM C 1017 is used or if a Type F or G high range water reducing admixture is permitted to increase the slump, the concrete shall meet all requirements of paragraph GENERAL REQUIREMENTS in PART 1. Extreme care shall be used in conveying and placing the concrete to avoid segregation. Consolidation and finishing shall meet all requirements of paragraphs Placing Concrete, Finishing Formed Surfaces, and Finishing Unformed Surfaces. No relaxation of requirements to accommodate flowable concrete will be permitted.

3.4.6 Expansion Joints

Installation of expansion joints and sealing of these joints shall conform to the requirements of Section 03250 EXPANSION JOINTS, CONSTRUCTION JOINTS, AND WATERSTOPS.

3.4.7 Waterstops

Waterstops shall be installed in conformance with the locations and details shown on the drawings using materials and procedures specified in Section 03250 EXPANSION JOINTS, CONSTRUCTION JOINTS, AND WATERSTOPS.

3.4.8 Dowels

Dowels shall be installed at the locations shown on the drawings and to the details shown, using materials and procedures specified in Section 03200 CONCRETE REINFORCEMENT and herein.

3.5 FINISHING FORMED SURFACES

Forms, form materials, and form construction are specified in Section 03100 STRUCTURAL CONCRETE FORMWORK. Finishing of formed surfaces shall be as specified herein. Unless another type of architectural or special finish is specified, surfaces shall be left with the texture imparted by the forms except that defective surfaces shall be repaired. Uniform color of the concrete shall be maintained by use of only one mixture without changes in materials or proportions. Except for major defects, as defined hereinafter, surface defects shall be repaired as specified herein within 24 hours after forms are removed. Repairs of the so-called "plaster-type" will not be permitted in any location. Tolerances of formed surfaces shall conform to the requirements of ACI 117/A117R. These tolerances apply to the finished concrete surface, not to the forms

themselves; forms shall be set true to line and grade. Form tie holes requiring repair and other defects whose depth is at least as great as their surface diameter shall be repaired as specified in paragraph Damp-Pack Mortar Repair. Defects whose surface diameter is greater than their depth shall be repaired as specified in paragraph Repair of Major Defects. Repairs shall be finished flush with adjacent surfaces and with the same surface texture. The cement used for all repairs shall be a blend of job cement with white cement proportioned so that the final color after curing and aging will be the same as the adjacent concrete. Concrete with excessive honeycomb, or other defects which affect the strength of the member, will be rejected. Repairs shall be demonstrated to be acceptable and free from cracks or loose or drummy areas at the completion of the contract and, for Class A and B Finishes, shall be inconspicuous. Repairs not meeting these requirements will be rejected and shall be replaced.

3.5.1 Architectural and Special Finishes

The exposed face of the stem of the Dam shall have a stone texture as specified in Section 03100 STRUCTURAL CONCRETE FORMWORK.

3.6 FINISHING UNFORMED SURFACES

The finish of all unformed surfaces shall meet the requirements of paragraph Tolerances in PART 1, when tested as specified herein.

3.6.1 General

The ambient temperature of spaces adjacent to unformed surfaces being finished and of the base on which concrete will be placed shall be not less than 50 degrees F. In hot weather all requirements of paragraphs Hot Weather Requirements and Prevention of Plastic Shrinkage Cracking shall be met. Unformed surfaces that are not to be covered by additional concrete or backfill shall have a float finish, with additional finishing as specified below, and shall be true to the elevation shown on the drawings. Surfaces to receive additional concrete or backfill shall be brought to the elevation shown on the drawings, properly consolidated, and left true and regular. The dusting of surfaces with dry cement or other materials or the addition of any water during finishing shall not be permitted. If bleedwater is present

prior to finishing, the excess water shall be carefully dragged off or removed by absorption with porous materials such as burlap. During finishing operations, extreme care shall be taken to prevent over finishing or working water into the surface; this can cause "crazing" (surface shrinkage cracks which appear after hardening) of the surface.

3.6.2 Rough Slab Finish

As a first finishing operation for unformed surfaces and as final finish for the base slab, the surface shall receive a rough slab finish. The concrete shall be uniformly placed across the slab area, consolidated as previously specified, and then screeded with straightedge strikeoffs immediately after consolidation to bring the surface to the required finish level with no coarse aggregate visible. Side forms shall be provided, rigidly supported, and set to exact line and grade. Allowable tolerances for finished surfaces apply only to the hardened concrete, not to forms. Forms shall be set true to line and grade. "Wet screeds" shall not be used.

3.7 CURING AND PROTECTION

3.7.1 General

Concrete shall be cured by an approved method for the period of time given below:

Concrete with Type III cement	3 days
All other concrete	7 days

Immediately after placement, concrete shall be protected from premature drying, extremes in temperatures, rapid temperature change, mechanical injury and damage from rain and flowing water for the duration of the curing period. Air and forms in contact with concrete shall be maintained at a temperature above 50 degrees F for the first 3 days and at a temperature above 32 degrees F for the remainder of the specified curing period. Exhaust fumes from combustion heating units shall be vented to the outside of the enclosure, and heaters and ducts shall be placed and directed so as not to cause areas of overheating and drying of concrete surfaces or to create fire hazards. Materials and equipment needed for adequate curing and protection shall be available and at the site prior to placing concrete. No fire or excessive heat, including welding, shall be permitted near or in direct contact with the concrete at any time.

3.7.2 Moist Curing

Concrete to be moist-cured shall be maintained continuously wet for the entire curing period, commencing immediately after finishing. If water or curing materials used stain or discolor concrete surfaces which are to be permanently exposed, the concrete surfaces shall be cleaned as approved. When wooden forms are left in place during curing, they shall be kept wet at all times. If steel forms are used in hot weather, nonsupporting vertical forms shall be broken loose from the concrete soon after the concrete hardens and curing water continually applied in this void. If the forms are removed before the end of the curing period, curing shall be carried out as on unformed surfaces, using suitable materials. Surfaces shall be cured by ponding, by continuous sprinkling, by continuously saturated burlap or cotton mats, or by continuously saturated plastic coated burlap. Burlap and mats shall be clean and free from any contamination and shall be completely saturated before being placed on the concrete. The Contractor shall have an approved work system to ensure that moist curing is continuous 24 hours per day.

3.7.3 Impervious Sheeting

Except for plastic coated burlap, impervious sheeting alone shall not be used for curing. Impervious-sheet curing shall only be used on horizontal or nearly horizontal surfaces. Surfaces shall be thoroughly wetted and be completely covered with the sheeting. Sheeting shall be at least 18 inches wider than the concrete surface to be covered. Covering shall be laid with light-colored side up. Covering shall be lapped not less than 12 inches and securely weighted down or shall be lapped not less than 4 inches and taped to form a continuous cover with completely closed joints. The sheet shall be weighted to prevent displacement so that it remains in contact with the concrete during the specified length of curing. Coverings shall be folded down over exposed edges of slabs and secured by approved means. Sheets shall be immediately repaired or replaced if tears or holes appear during the curing period.

3.7.4 Ponding or Immersion

Concrete shall be continually immersed throughout the curing period. Water shall not be more than 20 degrees F less than the temperature of the concrete.

3.7.5 Cold Weather Curing and Protection

When the daily ambient low temperature is less than 32 degrees F the temperature of the concrete shall be maintained above 40 degrees F for the first seven days after placing. During the period of protection removal, the air temperature adjacent to the concrete surfaces shall be controlled so that concrete near the surface will not be subjected to a temperature differential of more than 25 degrees F as determined by suitable temperature measuring devices furnished by the Government, as required, and installed adjacent to the concrete surface and 2 inches inside the surface of the concrete. The installation of the thermometers shall be made by the Contractor as directed.

3.8 TESTING AND INSPECTION FOR CONTRACTOR QUALITY CONTROL

Testing and inspection for Contractor quality control is the responsibility of the Contractor and shall be performed at the Contractor's expense.

3.8.1 Concrete Mixture

a. Air Content Testing. Air content tests shall be made when test specimens are fabricated. In addition, at least two tests for air content shall be made on randomly selected batches of each separate concrete mixture produced during each 8-hour period of concrete production. Additional tests shall be made when excessive variation in workability is reported by the placing foreman or Government inspector. Tests shall be made in accordance with ASTM C 231. Test results shall be plotted on control charts which shall at all times be readily available to the Government and shall be submitted weekly.

b. Slump Testing. In addition to slump tests which shall be made when test specimens are fabricated, at least four slump tests shall be made on randomly selected batches in accordance with ASTM C 143 for each separate concrete mixture produced during each 8-hour or less period of concrete production each day.

c. Temperature. The temperature of the concrete shall be measured when compressive strength specimens are fabricated. Measurement shall be in accordance with ASTM C 1064. The temperature shall be reported along with the compressive strength data.

d. Strength Specimens. At least one set of test specimens shall be made, for compressive or flexural strength as appropriate, on each different concrete mixture placed during the day for each portion thereof of that concrete mixture placed each day. Additional sets of test specimens shall be made, as directed by the Contracting Officer, when the mixture proportions are changed or when low strengths have been detected. A set of test specimens for concrete with a 28-day specified strength per paragraph Strength Requirements in PART 1 shall consist of four specimens, two to be tested at 7 days and two at 28 days. Test specimens shall be molded and cured in accordance with ASTM C 31 and tested in accordance with ASTM C 39 for test cylinders. Results of all strength tests shall be reported immediately to the Contracting Officer.

3.8.2 Inspection Before Placing

Foundations, construction joints, forms, and embedded items shall be inspected by the Contractor in sufficient time prior to each concrete placement in order to certify to the Contracting Officer that they are ready to receive concrete. The results of each inspection shall be reported in writing.

3.8.3 Vibrators

The frequency and amplitude of each vibrator shall be determined in accordance with COE CRD-C 521 prior to initial use and at least once a month when concrete is being placed. Additional tests shall be made as directed when a vibrator does not appear to be adequately consolidating the concrete. The frequency shall be determined while the vibrator is operating in concrete with the tachometer being held against the upper end of the vibrator head while almost submerged and just before the vibrator is withdrawn from the concrete. The amplitude shall be determined with the head vibrating in air. Two measurements shall be taken, one near the tip and another near the upper end of the vibrator head, and these results averaged. The make, model, type, and size of the vibrator and frequency and amplitude results shall be reported in writing. Any vibrator not meeting the requirements of paragraph

Consolidation, shall be immediately removed from service and repaired or replaced.

SECTION 11285

SLIDE GATES

PART 1 GENERAL

Furnishing, installing, and testing a new cast iron slide or sluice gate at the low level outlet works. Gate dimensions are approximately 72-inch by 72-inch to be confirmed in the field prior to fabrication.

1.1 REFERENCES

The publications listed below form a part of this specification to the extent referenced. The publications are referred to in the text by basic designation only.

AMERICAN SOCIETY FOR TESTING AND MATERIALS (ASTM)

ASTM A 276-92, Type 304	(2000) Stainless Steel Bars and Shapes
ASTM F 593-91	(1998) Stainless Steel Bolts, Hex Cap Screws, and Studs
ASTM F 594-91	(1998) Stainless Steel Nuts

AMERICAN WATER WORKS ASSOCIATION (AWWA)

AWWA C 501-92	(1993) Cast-Iron Sluice Gates

1.2 SUBMITTALS

The following shall be submitted in accordance with Section 01330 SUBMITTAL PROCEDURES:

SD-02 Shop Drawings

Gates

Dimensional shop drawings for the new slide gate, frame, wall thimble, stem, lift, stem guides, and accessories. Include field measurements of opening adjusted for proposed demolition work.

Design calculations for gate, lift, and stem sizing.

SD-03 Product Data

Gates

Manufacturer’s catalog data and literature for the gates, stems, operators, and accessories. Show materials of construction by ASTM reference and grade. Show all coatings and provide samples of available coating colors.

Manufacturer’s installation instructions and operation and maintenance manuals.

SD-07 Certificates

Gates

Certificate(s) of compliance with applicable ASTM or AWWA standards

Installation

Submit a letter from the manufacturer’s representative, stating that the sluice gate installation was tested and approved by the manufacturer’s representative within 7 days after testing and approval are complete.

PART 2 PRODUCTS

2.1 MANUFACTURER’S

The sluice gate lift, stem, and accessories shall be manufactured by Hydro Gate Corporation, Rodney Hunt Company, Waterman Industries, or approved equal.

2.2 DESIGN CRITERIA

1. The sluice gate, lift, stem, and accessories shall comply with applicable requirements of AWWA C501-92.

2. The sluice gate, lift, stem, and accessories shall be designed for a minimum unseating head of 15 feet.

3. The manually-operated lift shall be appropriately sized to operate the gate after it is unseated from its wedging device with a maximum effort of 40 foot-pounds.

4. The sluice gate shall be suitable to be mounted vertically on a flat concrete surface.

5. All materials and components used in the manufacture and fabrication shall be new, suitable for the uses intended by this application, and assembled and installed in accordance with the respective manufacturer=s recommendations.

2.3 MATERIALS OF CONSTRUCTION FOR SLUICE GATES

Materials of construction shall be as listed in AWWA C501-92.

2.4 SLIDES

The sluice gate slide shall be of one-piece construction. The slide shall be of square or rectangular cross section. Reinforcing rib(s) shall be provided for rigidity of the slide. The thickness of all aluminum shall be based on the calculated stresses and shall be documented in the submittal.

2.5 STEM AND STEM GUIDES

1. Stems shall be of one-piece stainless steel, compatible with the lift, and in accordance with ASTM A 276-92, Type 304. The capacity of the stem shall be at least four times greater than the required lift and unseating force.

2. Stem threads shall be machine cut or rolled and of the square or Acme type. Stems shall be supported with adjustable stem guides such that the 1/r ratio (as defined in AWWA C501) does not exceed 200.

2.6 STEM COVERS

The Contractor shall provide galvanized steel stem covers with a dial position indicator, graduated in feet and inches of gate opening.

2.7 STEM COVERS

1. Provide a manual gate lift for the sluice gate. The gate lift shall conform to the applicable requirements of AWWA C501-

92. A maximum effort of 40 foot-pounds shall be required to operate the sluice gate at the specified operating head.

2. The crank shall be removable and fitted with a corrosion resistant rotating handle. The crank shall rotate in the vertical plane and rotate the gate stem through the use of a gear drive.

2.8 GUIDES

1. The gate will be mounted on guides attached to the demolished portion of the existing wall. Submit details of proposed guides/thimble to the Engineer.

2. Verify that the guide bolt hole pattern is compatible with the gate.

2.9 BOLTS AND NUTS

Bolts shall be stainless steel, conforming to ASTM F 593-91 or ASTM F 594-91, alloy Group 1 or Group 2. Riveted connections will not be permitted.

2-10 WEDGES

The gate frame shall have a sufficient number of blocking wedges to provide water tightness to meet AWWA C501-92 criteria. The side wedges shall be adjustable.

PART 3 EXECUTION

3.1 PAINTING AND COATING

1. Painting and coating for all components shall be as recommended by the gate manufacturer. All painting and coating shall be shop applied, with any areas damaged during shipment or handling to be repaired in accordance with the gate manufacturer’s recommendations. The paint color shall be the manufacturer’s standard colors unless otherwise directed by the Owner.

3.2 INSTALLATION

1. The sluice gate, lift, stem, and accessories shall be installed in accordance with the gate manufacturer=s recommendations.

2. The Contractor shall provide the manufacturer=s recommended lubricants.

3. The gate lift and stem guide(s) shall be installed using the size and type of structural fasteners recommended by the sluice gate manufacturer.

3.3 DELIVERY OF GATE

1. The sluice gate, lift, stem, and accessories shall be carefully handled and protected against damage from impact shocks and free fall.

2. Sluice gate, lift, stem, and accessories damaged during delivery and prior to acceptance shall be repaired or replaced by the Contractor at no additional expense to the Owner.

3. The manufacturer shall inspect the gate, lift, and stem prior to delivery to ensure there are no damaged portions. The manufacturer shall repair all defects prior to delivery of the gate, lift, and accessories.

3.4 FIELD TESTING

1. Operate the sluice gate through five complete cycles without sticking or binding.

2. The Contractor shall measure the torque required to operate the gate with a torque wrench. Measured torque shall be less than the limit specified in paragraph 2-7 of this Section.

APPENDIX G

Project Standard Operating Procedures

Standard Operating Procedure
for
Hand Auger Borings

SOP ID: 10003
Date Initiated: 2/20/90
Revision #005: 6/13/97

Approved By: _____ _____
Name 1 **Date**

_____ _____
Name 2 **Date**

REVISION RECORD

Rev #	Date	Additions/Deletions/Modifications

Standard Operating Procedure for Hand Auger Borings

1. Statement of Purpose

This section discusses procedures for conducting hand auger soil borings either for exploration or for the installation of monitoring wells. The procedures provided in this text outline the advancement, decontamination, abandonment, and required documentation for the completion of hand auger borings. This document was prepared in accordance with ASTM D 1452 - 80. Soil sampling for chemical analysis is covered under "STANDARD OPERATING PROCEDURES FOR SOIL SAMPLING."

2. Equipment and Decontamination

2.1. Equipment required for conducting hand auger boring shall include:

- Hand auger (bucket or dutch)
- Auger extensions, wrenches, and handle
- Hand towels
- Portable VOC analyzer (Photovac Microtip® or equivalent)
- Polyethylene plastic sheeting
- Distilled water
- Field documentation
- Indelible marker
- Three 5-gallon buckets
- Alconox detergent, methanol, hexane, nitric acid
- Graduated cylinder
- Analytical balance (accurate to 0.1 gram)
- 500 ml disposable beakers
- Decontamination brushes
- Personal protective equipment
- Clipboard
- Pry bar

2.2. Utilities

2.2.1. Notify the appropriate "one call" utility notification service (e.g. Call Before You Dig) at least three working days prior to commencing operations on a site. The locations of all proposed borings must be clearly marked in the field prior to notification. The site manager MUST call and confirm that each utility has been to the site and has marked their respective lines.

2.2.2. Particularly upon larger private sites, consult with the Owner or other person knowledgeable about the site as to locations of potential private or abandoned utilities and locate these prior to beginning work. Upon the discretion of the Project Engineer/Manager, a pipe locator can also be used to assist in locating utilities.

2.2.3. Note that OSHA may have additional requirements for location of utilities.

2.2.4. All efforts to locate underground utilities should be properly documented in the field log book prior to onset of the work scheduled.

2.3. OSHA

The Senior LEA representative shall be the Competent Person required by OSHA for all work. However, this does not relieve other LEA representatives from bringing to his or her attention conditions which may be unsafe or present a hazard to the drilling crew, the general public, or other workers on the site.

2.4. Decontamination

2.4.1. All down-hole and sampling equipment will be sufficiently decontaminated prior to use. Decontamination procedures presented in site specific work plans may vary slightly from those presented below, dependent upon the particular types of contaminants encountered.

2.4.2. A section of 5-mil plastic sheeting shall be cut of sufficient size to underlie the decontamination area to contain any discharge of decontamination solutions.

2.4.3. The following solutions (as appropriate for the anticipated contaminants) shall be prepared and placed in 500-ml laboratory squirt bottles: methanol solution (less than 10% solution); 10% nitric acid solution; 100% hexane solution; and distilled deionized (DI) water. A fifth solution of phosphate-

free detergent and tap water (approximately 2.5 gallons) shall be prepared in a five-gallon bucket.

2.4.4. All loose debris shall be removed from the augers and spatulas into an empty 5-gallon bucket or plastic sheeting, using a stiff bristled brush.

2.4.5. The order of decontamination solutions is as follows:

1) Detergent Scrub
2) DI Water Rinse
3) Hexane Rinse (to be used only if separate-phase petroleum product, other than gasoline, is present)
4) DI Water Rinse
5) 10% Nitric Acid Rinse (to be used only when metals are suspected as potential contaminants)
6) DI Water Rinse
7) Methanol Rinse (<10% solution)
8) Air Dry

2.4.6. Wrap each piece of decontaminated equipment in aluminum foil to maintain cleanliness.

2.4.7. At the end of the project day, all used equipment shall be decontaminated. Dispose of all spent decontamination solutions in accordance with all applicable municipal, state and federal regulations.

2.5. Water

2.5.1. Water is occasionally required to maintain the stability of the boring. If water is used, the source(s), quality, and volume(s) will be recorded on the boring log.

2.5.2. No other drilling fluid, may be used without specific authorization from the Project Manager.

2.6. VOC Monitoring

2.6.1. A portable volatile organic compound (VOC) analyzer shall be available on site and shall be used to screen all cuttings and fluids (if any) removed from the hole.

2.6.2. Since, in general, it cannot be presumed that a site is clean, all cuttings and/or fluids which show a reading on the VOC analyzer above

background shall be containerized or drummed, as appropriate, on the site. Section 3.6 provides additional information on management of potentially contaminated fluids and materials.

2.6.3. All health and safety requirements shall be addressed in the Site-Specific Health and Safety Plan for each site.

3. Procedure

3.1. Site Preparation

3.1.1. A sufficient area shall be cordoned off to restrict access to the work area. This area shall be termed an "Exclusion Zone".

3.1.2. An equipment decontamination area shall be assembled, as described in Section 2.4, within the exclusion zone.

3.1.3. The area immediately surrounding the proposed borehole shall be covered with 5-mil plastic sheeting (minimum area: 10 square feet). A hole of sufficient diameter shall be cut from the center of the plastic sheeting to facilitate auger advancement.

3.1.4. All personal protective equipment shall donned.

3.1.5. Should flooring need to be breached for the advancement of the boring, coring of the floor will be conducted using a concrete coring saw and a wet-dry vacuum to prevent water and cuttings from moving beyond the immediate vicinity of the borehole.

3.2. Auger Advancement

3.2.1. Begin the boring by rotating and advancing the auger to the desire depth. Remove the auger and examine the soil for texture, composition, density, moisture and grain-size distribution. Record all information as described in Section 3.4.

3.2.2. The soils removed shall be logged in two-foot increments or at each lithologic change.

3.2.3. Collect a sufficient aliquot of the soil sample to satisfy all requirements for field and laboratory analysis. A lithologic sample may be required and should be obtained into a 4-ounce soil jar. The procedures for collection of

soil samples for chemical analysis are described in the *Standard Operating Procedures for Soil Sampling*.

3.2.4. Discard boring spoils into the appropriate containers or onto the plastic sheeting for later disposal.

3.3. Field Analysis

3.3.1. The probe used to detect VOCs shall be either a Photovac Microtip® photoionization detector or a Foxboro OVA® flame ionization detector or equivalent and calibrated in accordance with the instructions provided in Attachment A to this SOP. Calibration shall be performed, at a minimum, prior to each sampling event and checked after each day of sampling.

3.3.2. The following procedure shall be used to obtain readings of the VOCs present in a soil sample:

1) Obtain an aliquot of soil (approximately 50 grams) from the bottom of the auger and place it into a Ziploc® plastic bag or equivalent and seal.

2) Agitate the sample, assuring that all soil aggregates are broken, for two minutes.

3) Carefully break the seal of the bag enough to insert the VOC probe.

4) Record the maximum reading obtained on the appropriate forms, as described in Section 3.4.

3.4. Field Documentation

3.4.1. The following general information shall be recorded in the field log book and/or the appropriate field form(s).

- Project and site identification
- LEA commission number
- Field personnel
- Name of recorder
- Identification of borings
- Collection method
- Date and time of collection
- Types of sample containers used, sample identification numbers and QA/QC sample identification

- Field analysis method(s)
- Field observations of sampling event
- Name of collector
- Climatic conditions, including air temperature
- Chronological events of the day
- Status of total production
- Record of non-productive time
- QA/QC data
- Location of boring(s) on site in sufficient detail to relocate boring at a future time (include sketch)

3.4.2. The following information shall be recorded on the boring log:

- Project name, location, and LEA commission number
- Borehole number, borehole diameter, boring location, drilling method, field crew performing work, groundwater observations, logger's name and date
- Depth below grade, sample I.D. number, duplicate numbers, VOC analyzer reading
- A complete sample description, including as a minimum: depth, material size gradation using the Burmeister system, color, moisture, and density
- Should a well be constructed in a bore hole, a complete well schematic shall be drawn and accurately labeled
- Use of water, including source(s) and quantity

3.4.3. The following information shall be recorded on the Field Quality Review Checklist:

- Reviewer's name, date, and LEA commission number
- Review of all necessary site activities and field forms
- Statement of corrective actions for deficiencies

3.4.4. The Field Instrument & Quality Assurance Record shall include the following information:

- Client's name, location, LEA commission number, date
- Instrument make, model, and type
- Calibration readings
- Calibration/filtration lot numbers

- Field personnel and signature

3.5. Disposal of Potentially Contaminated Materials

3.5.1. Potentially contaminated cuttings or fluids, as indicated by knowledge of the site, discoloration, VOC analyzer readings, or other evidence, shall be containerized on the site pending sampling and determination of hazardous waste status.

3.6. Boring Abandonment

3.6.1. If the boring is not to be used for other purposes (i.e. monitoring well, soil vapor probe, soil vapor extraction well, etc.), it shall be abandoned.

3.6.2. The boring shall be filled and sealed with neat cement grout, or high-density bentonite clay grout.

3.6.3. Excess cuttings shall be containerized and sampled before disposal.

3.6.4. In paved areas, the upper three feet of the borehole shall be filled, up to two inches below the existing grade, with sand to allow for repairing of the pavement.

3.6.5. Pavement shall be repaired using cold patch asphalt filler or concrete.

4. Other

Depending on the specific site, other considerations may be applicable. Consult the OSHA regulations, applicable RCRA or CERCLA regulations, and the site-specific work plan for details.

Standard Operating Procedure
for
Soil Sampling

SOP ID: 10006
Date Initiated: 02/20/90
Revision #006: 05/16/01

Approved By: _____ _____
Owner/Designee **Date**

_____ _____
Chairperson **Date**
Rules and Procedures Subcommittee

REVISION RECORD

Rev #	Date	Additions/Deletions/Modifications
Initial Issue	02/20/90	Initial Issue.
001-004	NR	No record.
005	07/19/00	Revisions to template, including new logo.
006	05/16/01	Revisions to Sections 4.2.1, 4.2.2; add Section 4.2.3.

Standard Operating Procedure for Soil Sampling

1. Purpose and Scope

This document discusses procedures for collection of soil samples for analytical analysis. Methods for collection and quality assurance/quality control requirements are covered under separate standard operating procedures (SOPs). The procedures outlined in this document are in accordance with ASTM Standard D 420 and the EPA document Test Methods for Evaluating Solid Waste, Physical/Chemical Methods (SW-846). These procedures may vary slightly according to the needs of specific projects.

2. Ownership and Approval

The President of LEA is the owner of this procedure. The owner or designee must approve this procedure and all revisions after review.

3. Definitions

3.1. Field Forms: For the purpose of document and data control, a form is a document used in the conduct of company business to capture data, including approvals where required. Completed forms providing objective evidence of quality related activities are retained as quality records.

4. Equipment and Equipment Documentation

4.1. Equipment required for the collection of soil samples shall include:

- stainless steel spatula or dedicated wood spatula
- decon solutions, including distilled water, 10 percent methanol, 10 percent nitric acid
- hand towels
- polyethylene plastic sheeting
- sample collection jars
- clean disposable gloves
- field documentation
- indelible marker

- cooler, cold packs and maximum/minimum thermometer (is this necessary?)
- chain of custody seals and sample labels
- polythethylene plastic sheeting (5 mil thickness)
- balance for weighing samples (for LEA laboratory samples, if needed)
- utility knife
- plastic bags

4.2. Cleaning and Decontamination

4.2.1. Prior to collecting a soil sample, the LEA representative will ensure that all necessary sampling equipment is clean and decontaminated according to the procedure outlined in section 4.2.3 or according to the site specific work plan if different than below.

4.2.2. Upon completion of all sampling requirements and prior to leaving the site, all equipment used for sampling shall be cleaned and decontaminated according to the procedure outlined in section 4.2.3 or according to the site specific work plan if different than below. All generated decontamination fluids shall be disposed of in accordance with the site specific work plan and all municipal, state, and federal requirements.

4.2.3. The decontamination procedure of durable sampling equipment will be accomplished via swabbing the surfaces with a solvent. The order of decontamination is as follows:

- Detergent swab
- DI water rinse
- Hexane rinse (to be used if separate-phase petroleum product, other than gasoline is present)
- DI water rinse
- 10 percent nitric acid rinse (to be used only when metals are suspected as potential contaminants)
- DI water rinse
- Methanol rinse (less than 10 percent solution)
- Air dry

5. Sampling Protocols

5.1. Preliminary Sampling Procedures

5.1.1. Sample Bottles

5.1.1.1. A laboratory request form shall be completed and submitted to the laboratory with following information:

- project name
- LEA commission number
- date of submittal and date needed
- quantity of sample locations and sample points at each location
- type(s) of samples
- analytes, detection limits and QA/QC needed
- cooler(s) required
- number of chain of custody forms requested

5.1.1.2. Check bottles against laboratory request form for completeness. The bottles should also be checked for damage and cleanliness. Confirm with laboratory personnel the adequacy of the preservatives used.

5.1.1.3. The total number of sample sets shall be increased by 10 percent to allow for possible breakage during transport to sites or other contingencies (minimum: one additional sample bottle set per event).

5.1.1.4. Obtain preprinted labels and paperwork through the LEA information management system.

5.1.1.5. Label/date bottles in the field prior to sample collection. Check for accuracy.

5.1.1.6. A cooler with adequate ice or cold packs should be obtained from the laboratory to insure that the collected samples remain at 4 degrees Celsius during transport. Packing material should also be obtained to insure against breakage during transport.

5.1.2. Site Preparation

5.1.2.1. A level table shall be placed within the exclusion zone and covered with polyethylene sheeting.

5.1.2.2. Decontaminated spatulas shall be placed on the table. Sample bottles shall be placed in a convenient location and in order of sample collection.

5.1.2.3. PID and plastic bags shall be placed on table for VOC screening, if necessary.

5.2. Sampling Procedures

5.2.1. All personal protective equipment (PPE) should be donned and maintained in accordance with the site specific work plan or health and safety plan during all sampling procedures. In the event that no PPE has been specified for a particular sampling event, disposable latex gloves should be donned, as a minimum, during all sampling procedures.

5.2.2. The particular soil sampling device (i.e., hand auger, split spoon, etc.) shall be retrieved from the point of collection and placed on a level table covered in polyethylene sheeting.

5.2.3. Using a decontaminated stainless steel spatula or dedicated wood spatula, the soil shall be transferred directly into prelabeled soil sampling containers. Care should be taken to completely fill the sample container intended for VOC analysis. Large void spaces within the container shall be minimized by packing, not agitation.

5.2.4. Wipe the rim of the sample container with a clean paper towel to remove excess solids which would prevent adequate sealing of the sample container and seal the container.

The order of sample collection shall be as follows:

NOTE Reviewers, this order is not the exact order I collect samples. I typically collect soil for PID screening and put in plastic bag, then sample for VOCs. Please state your method/opinion.

- samples to be analyzed for volatile organic compounds at the LEA Analytical Laboratory
- samples to be analyzed for volatile organic compounds using appropriate EPA methodologies
- samples to be screened for total volatile organic compounds with a total volatile organic analyzer (I do this first)
- samples to be analyzed for other organic and inorganic constituents

5.2.5. As required, affix a custody seal, noting the date and time of collection across the cap/bottle interface and on the sample label. Place and secure sample within cooler and complete all sample collection documentation.

5.3. Post Sampling Procedures

5.3.1. As required, upon completion of all sampling procedures for a particular site, secure the lid of the cooler using packaging tape with the chain of custody inside.

5.3.2. Should the laboratory be local, transport the samples directly to the laboratory and present them to the sample manager. The representative of LEA should witness the verification of the chain of custody and obtain a carbon copy for filing in the project notebook.

5.3.3. Should the laboratory be distant, arrange for transport with a reputable carrier service. The cooler and samples shall be secured for transport, and all mailing documentation secured onto the top of the cooler. Unless otherwise specified, delivery shall be overnight. A request for confirmation of acceptance should be made to the carrier at the time of pick-up.

5.4. Documentation

5.4.1. The following general information shall be recorded in the field log book and/or on the appropriate field forms:

- project and site identification
- LEA commission number
- field personnel
- name of recorder
- identification of borings
- collection method
- date and time of collection.
- types of sample containers used, sample identification numbers and QA/QC sample identification
- preservative(s) used
- parameters requested for analysis
- field analysis method(s)
- field observations on sampling event
- name of collector
- climatic conditions, including air temperature
- internal temperature of field and shipping (cooled) containers
- chronological events of the day
- status of total production
- record of non productive time
- QA/QC data

5.4.2. The following information shall be recorded on the Daily Field Report QA Checklist:

- reviewer's name, date, and LEA commission number
- review of all necessary site activities and field forms
- statement of corrective actions for deficiencies

5.4.3. The following information shall be recorded on the chain of custody record:

- client's name and location
- date of sample collection
- sample number
- container type, number, size
- preservative used
- signature of collector
- signatures of persons involved in the chain of possession
- analyses to be performed
- type and number of samples

5.4.4. The following information shall be provided on the sample label using an indelible pen:

- sample identification number
- date and time of collection
- place of collection
- parameter(s) requested (if space permits)

5.4.5. The following information shall be recorded on the sample collection data sheet:

- client name, location and LEA commission number
- boring or sampling location identification number
- date and time of collection
- sample number
- depth sample was obtained
- field instrumentation reading

6. Records

6.1. Additional records may be identified within documents referenced by this procedure.

7. References

7.1. ASTM Standard D 420

7.2. EPA document Test Methods for Evaluating Solid Waste, Physical/Chemical Methods (SW-846)

8. Nature of Change for this Issue

8.1. Original issue to establish SOP requirements.

8.2. No record for revisions 001 through 004.

8.3. Revision 005 made to reflect new company logo, SOP format, and changes to Sections 4.1, 5.1.1, 5.4.2 and 5.4.3.

END OF DOCUMENT

Standard Operating Procedure
for
Sediment Sampling in Shallow Rivers and Ponds

SOP ID: 10009
Date Initiated: 11/03/94
Revision #001: 6/13/97

Approved By: _____ _____
Name 1 **Date**

_____ _____
Name 2 **Date**

REVISION RECORD

Rev #	Date	Additions/Deletions/Modifications

Standard Operating Procedure for Sediment Sampling in Shallow Rivers and Ponds

1. Statement of Purpose

This document discusses procedures for collection of sediment samples for laboratory analysis. Methods for quality assurance/quality control requirements are included in a separate SOP. The procedures outlined in this document are in accordance with the EPA document Test Methods for Evaluating Solid Waste, Physical/Chemical Methods (SW-846). These procedures may vary slightly according to the needs of specific projects.

2. Equipment and Decontamination

2.1. Equipment required for the collection of soil samples shall include:

2.1.1. Stainless steel spatula (spoon, scoop, trowel, etc.)

2.1.2. Sample collection container (such as polyethylene or stainless steel beakers, long-handled scoops, etc.)

2.1.3. Distilled water

2.1.4. Hand towels

2.1.5. Polyethylene plastic sheeting

2.1.6. Sample collection jars

2.1.7. Clean disposable gloves

2.1.8. Field documentation

2.1.9. Indelible marker

2.1.10. Cooler, cold packs and maximum/minimum thermometer

2.1.11. Custody seals and sample labels

2.2. Cleaning and Decontamination

2.2.1. Prior to collecting sediment samples, the LEA representative will ensure that all necessary sampling equipment is clean and decontaminated according to the site specific work plan or collection method SOPs.

2.2.2. Upon completion of all sampling requirements and prior to leaving the site, all equipment used for sampling shall be cleaned and decontaminated. All generated decontamination fluids shall be disposed of in accordance with the site specific work plan and all municipal, state and federal requirements.

3. Sampling Protocols

3.1. Preliminary Sampling Procedures

3.1.1. Sample Bottles

3.1.1.1. A Laboratory Request Form shall be completed and submitted to the laboratory with following information:

- Project and LEA Commission Number
- Date of submittal and date needed
- Quantity of sample locations and sample points at each location
- Type(s) of samples
- Analytes, detection limits and QA/QC needed
- Cooler(s) required
- Number of Chain-of-Custody forms requested

3.1.1.2. Check bottles against Laboratory Request Form for completeness. The bottles should also be checked for damage and cleanliness. Confirm with laboratory personnel the adequacy of the preservatives used.

3.1.1.3. Label all bottles prior to sampling with the information and check for accuracy. This step may also be performed in the field prior to sample collection.

3.1.1.4. The total number of sample sets shall be increased by 10% to allow for possible breakage during transport to sites or other contingencies (minimum: one additional sample bottle set per event).

3.1.1.5. A cooler with adequate ice or cold packs should be obtained from the laboratory to insure that the collected samples remain at 4°C during transport. Packing material should also be obtained to insure against breakage during transport.

3.1.2. Site Preparation

3.1.2.1. Polyethylene sheeting shall be laid on the ground in the vicinity of the sample collection location.

3.1.2.2. Decontaminated spatulas and sediment collection containers shall be wrapped in aluminum foil and placed on the table. Prelabeled sample bottles shall be placed in a convenient location and in order of sample collection.

3.2. Sampling Procedures

3.2.1. All personal protective equipment (PPE) should be donned and maintained in accordance with the site specific work plan or health and safety plan during all sampling procedures. In the event that no PPE has been specified for a particular sampling event, disposable latex gloves should be donned, as a minimum, during all sampling procedures.

3.2.2. In order to obtain representative samples, it is important to minimize physical agitation of sediments. If it is necessary to stand in the surface water body (e.g. river) to collect sediment samples, the samples must be collected upstream of the disturbed area. Samples should be collected using an appropriate collection container from the most downstream location, moving upstream for subsequent samples.

3.2.3. The particular sediment sampling device (i.e. spatula) shall be placed on the polyethylene sheeting.

3.2.4. Utilizing a decontaminated stainless steel spatula, sediment shall be transferred from the sediment collection container directly into a prelabeled sampling container. Care should be taken to completely fill

the sample container. Large void spaces within the container shall be minimized by packing, not agitation.

3.2.5. Wipe the rim of the sample container with a clean paper towel to remove excess solids which would prevent adequate sealing of the sample container and seal the container.

3.2.6. Affix a custody seal, noting the date and time of collection across the cap/bottle interface and on the sample label. Place and secure sample within cooler and complete all sample collection documentation.

3.3. Post-Sampling Procedures

3.3.1. Upon completion of all sampling procedures for a particular site, secure the lid of the cooler using packaging tape with the Chain-Of-Custody inside.

3.3.2. Should the laboratory be local, transport the samples directly to the laboratory and present to the sample manager. The representative of LEA should witness the verification of the Chain-Of-Custody and obtain a carbon copy for filing in the project notebook.

3.3.3. Should the laboratory be distant, arrange for transport with a reputable carrier service. The cooler and samples shall be secured for transport, and all mailing documentation secured onto the top of the cooler. Unless otherwise specified, delivery shall be overnight. A request for confirmation of acceptance should be made to the carrier at the time of pick-up.

3.4. Documentation

3.4.1. The following general information will be recorded in the field log book and/or on appropriate field forms:

- Project and site identification
- LEA commission number
- Field personnel
- Name of recorder
- Identification of sampling locations
- Collection method
- Date and time of collection.

- Types of sample containers used, sample identification numbers and QA/QC sample identification
- Preservative(s) used
- Parameters requested for analysis
- Field analysis method(s)
- Field observations on sampling event
- Name of collector
- Climatic conditions including air temperature
- Internal temperature of field and shipping (refrigerated) containers
- Chronological events of the day
- Status of total production
- Record of non-productive time
- QA/QC data
- Locations of samples on the site in sufficient detail to relocate samples at a future time (include sketch)

3.4.2. The following information will be provided on the sample label using an indelible pen:

- Sample identification number
- Date and time of collection
- Place of collection
- Parameter(s) requested (if space permits)

3.4.3. The following information will be recorded on the sample collection data sheet:

- Client name, location and LEA commission number
- Sample identification number
- Date and time of collection
- Depth from which sample was obtained

3.4.4. The following information will be recorded on the chain-of-custody record:

- Company's name and location
- Sample identification and/or number
- Date and time of collection
- Container type, number, size
- Preservative used
- Signature of collector
- Signatures of persons involved in the chain of possession
- Analyses to be performed
- Type and number of samples

3.4.5. The following information will be recorded on the Field Quality Review Checklist:

- Reviewer's name, date, and LEA commission number
- Review of all necessary site activities and field forms
- Statement of corrective actions for deficiencies

Standard Operating Procedure
for
Geologic Logging of Unconsolidated Sedimentary Materials

SOP ID: 10015
Date Initiated: 12/27/94
Revision #001: 11/20/96

Approved By: _____ _____
Name 1 **Date**

_____ _____
Name 2 **Date**

REVISION RECORD

Rev #	Date	Additions/Deletions/Modifications

Standard Operating Procedure
for
Geologic Logging of Unconsolidated Sedimentary Materials

1. Statement of Purpose

This document presents the methods and procedures used to describe unconsolidated sedimentary materials for geological purposes in a uniform and consistent manner. It includes procedures for properly recording the observations by providing guidelines for completing boring logs and submitting those logs for computer entry. This Standard Operating Procedure (SOP) refers only to geologic logging of soils and sediments (including artificial fill and other man-made deposits) and specifically is not intended to describe logging of soils or sediments for geotechnical or other engineering purposes. Although the SOP presents a system for describing sediments, it is not intended to be a definitive reference for classifying sedimentary materials, nor is it intended to replace experience or training. Individuals using this SOP should be trained and competent in field methodologies and geologic logging prior to commencing field activities.

2. Collection of Unconsolidated Soil/Sediment Samples

2.1. Equipment required for the geologic logging of soil/sediment samples shall include the following items:

- Tape measure or scale
- Hand lens
- Color chart
- Grain-size comparator
- Field forms
- Indelible marker(s)
- Small table
- Field Book
- Clipboard

2.2. Sample Collection

Samples of soil and unconsolidated sedimentary materials will be collected in general accordance with the SOPs for Soil Sampling (SOP #10006), Hand Auger Borings (SOP #10003), Hollow Stem Auger Soil Borings (SOP #10008), and Geoprobe® Probing and

Sampling (SOP #10011). Those SOPs include procedures for decontamination of equipment required for sample collection, as well as providing the methodologies for sample collection and documentation.

3. Descriptions of Unconsolidated Sedimentary Materials

3.1. General Sediment Description Guidelines

For the purposes of geologically logging unconsolidated soils and sedimentary materials, a Modified Burmister method of description and classification should be used. The Modified Burmister Sediment Classification System (or simply, Burmister System) is intended as a rapid field method for identifying and classifying sediments. The system is based upon visual identification of the generalized grain-size distribution and description of the physical characteristics of the sample.

A Burmister System description is comprised of three parts: a color descriptor; a grain-size descriptor; and modifier(s).

The color descriptor indicates the overall color or colors of the wet sample. The descriptor consists of a color name or names and (if possible) the color code from a standard color reference (for example, a Munsell[7] Color Chart).

The grain-size description indicates the predominant grain size in the sample, as well as the relative percentages of other grain sizes present.

Modifiers are used to further describe the geologic character of the sample. Modifiers may include descriptions of moisture content, sorting, sphericity, angularity, sedimentary structures or other pertinent information.

3.1.1. Color Description

The color of the wet sediment should be determined with reference to a standard color comparator (for example, a Munsell[7] Color Chart) for rocks or sediment. The included color descriptor should contain both the color name and, when a color comparator is used, the appropriate hue-chroma value code, for example "Reddish brown (5YR 4/4)". The color of a sample should always be gauged when the sample is wet, or it should be noted otherwise.

3.1.2. Predominant Grain-Size Description

The first step in describing a sediment sample is visually estimating the size range and percentage of the various grain sizes in the sample. Reference should be made to standard geologic comparators for assessment of the grain size(s).

The primary grain-size descriptor indicates the predominant grain size, as judged visually, of the sample. The descriptor is always capitalized and underlined. Possible descriptors include: CLAY, SILT, SAND, GRAVEL (GRANULES, PEBBLES, COBBLES, and BOULDERS). These correspond to the standard Wentworth size-classification scheme used for describing sediments for geologic purposes. Size classifications for CLAY through GRAVEL are presented in Table 1. The descriptor should also include an indication of the relative size range of the sample within the predominant grain size (for example, "fine-to-medium sand", "coarse sand", etc.). Although Table 1 includes divisions of the silt category, this is applicable only to sediment samples analyzed by pipette or hydrometer and cannot be distinguished in the field.

The presence of other grain sizes, in addition to the predominant material is also included in the grain-size descriptor. Appropriate grain sizes are the same as for the predominant grain size of the material (clay, silt, etc.), however only the initial letter of the word is capitalized. The description should also include an indication of the relative amount of the minor components. Appropriate indicators for the relative percentages present are provided in Table 2.

It is generally not considered possible to visually distinguish between clay and silt. Estimation of the silt/clay content of a sample should be based upon the plastic properties of the sample. The plastic properties of the sample may be estimated by taking an approximately 1 cubic centimeter ball of the sediment and attempting to roll a thread of the material between the palms of the hand. The minimum size of the thread which may be rolled may be compared to the values presented in Table 3 and the plasticity estimated. A comparison of the minimum thread diameter which may be formed with the information presented in Table 3 provides an approximate silt/clay content estimate for sand-silt-clay sediments and composite clay sediments.

3.1.3. Modifiers

Various modifiers may be added to the basic sediment description to further describe the geologic character of the sample.

For sand or coarser-sized material, the relative degree of sorting, the sphericity, and angularity should also be recorded. Sorting may be visually estimated. Sphericity and angularity, however, should be made with reference to an accepted comparator. A chart illustrating various degrees of sphericity and angularity is attached as Figure 1.

The mineralogy of the sample should also be recorded. Reference should be made to the relative percentages, grain size(s), and sphericity of the mineral particles (especially where it differs significantly from that of the predominant grain-size material).

Other information which should be recorded for each sample includes an estimate of the density and cohesiveness of the sample (made from blow counts where applicable, or other specific instrumentation where appropriate), the relative moisture content of the sample, visible sedimentary structures, and any odors or staining noticeable during logging. Tables 3 and 4 present appropriate terms for describing the plasticity, density, and cohesiveness of sediment samples.

Especially important is an indication that a specific portion of the material may represent "sluff" or material collapsed from the borehole walls.

3.2. Written Sediment Descriptions

The written sediment description may be made as either an unabbreviated or an abbreviated description. Both methods should relate the same information, however the abbreviated description is better suited for field use.

In an unabbreviated description, all of the words of the description should be written out in their entirety. The descriptor should include pertinent information regarding the sample's size gradation, consistency, color, and relative grain size, as described previously. The color descriptor should precede the primary sediment component name, while additional details such as the plasticity, mineralogy, visible sedimentary structures, etc., should follow the sediment component name.

An example of an unabbreviated description is:

Red-brown (5YR 4/4), fine to coarse SAND, little fine Gravel, little Silt, moist, moderately well sorted, low

sphericity, Gravel waterworn, Sand subangular, micaceous.

Since the Burmister system is intended to provide a means for describing uniform sediments, three "special" cases should be addressed.

First, the Burmister system is intended only to describe the sediment. Where a genetic classification of the material is significant, it should be added as a separate statement at the end of the description. For example:

Olive gray (5Y 4/2), coarse to fine SAND, some fine Gravel, little Silt, moist, poorly sorted, sub-rounded to angular, dense. TILL.

A genetic classification should only be used when the origin of the material is very clear and not simply a field interpretation of possible depositional environment.

Second, in the case where the sediment sample is heterogeneous (for example, a varved silt and clay), each component should be described individually, and reference should be made to the relative percentages of each component and to the interlayering. For example:

Soft, reddish-brown (5YR 3/4), CLAY and SILT, alternately layered, medium to high overall plasticity. Layers: CLAY layers, 3/8" to 5/8" thick, comprise 60%" of sample. SILT layers, 1/8" to 3/8" thick, comprise 40%" of sample. VARVED CLAY and SILT.

Third, when one material grades uniformly into a distinct sediment type, the individual components should be described separately and the gradation noted. For example:

Soft, reddish-brown (5YR 3/4), CLAY, medium overall plasticity, grading into soft, reddish-brown (5YR 4/4), SILT, trace Clay, low overall plasticity.

In the abbreviated sediment descriptions, the sample information is presented in a manner analogous to that for the unabbreviated description substituting standard abbreviations for specific portions of the text. Abbreviations for the identifying terms in the Burmister system are presented in Tables 2, 3, and 4. Mineralogic and geologic abbreviations may be found in standard geologic and mineralogic texts and field

manuals. Except for the use of abbreviations, the abbreviated description is completely analogous to the unabbreviated description.

For the sake of consistency in describing unconsolidated sedimentary materials, the description should follow the order and general definitions presented in Table 5.

4. Recording Descriptions

4.1. Geologic Boring Logs

Attached to this SOP is a copy of LEA's standard geologic boring log form. This log should be completed for each boring that is completed. The heading information is self-explanatory. The body of the log contains space for information for each sampled interval in the boring. The following information should be recorded:

Depth Interval	The upper and lower depths from which the sample was collected.
Sample No.	The sample number, as obtained from LEA Data Management, assigned to this sample.
Recovery	The length of the recovered sample and the length of the sampler (in consistent units). The percent recovery will be calculated by the geologic logging program.
Blows/6"	The number of blow counts per 6" interval for the sample. Alternately, the downhole pressure or other pertinent information regarding the required drilling or sampling force.
Sample Description	The sample description using the guidelines and order presented in Section 3.0 and Table 5.
PID/FID	The headspace reading from a PID or FID in ppm.

The comments section of the form should be used to record general observations regarding drilling conditions, backfilling of the borehole, or other pertinent information regarding drilling the borehole.

4.2. Computer Data Entry

After a project is completed, copies of the Geologic Boring Log forms should be submitted for computer data entry. A completed copy of the Geologic Soil Boring/well Completion Log Request Form should be attached to the log forms; a copy of the request form is attached to this SOP.

TABLE 1
Wentworth Size Classification System

US Standard Sieve Sizes	Millimeters	Microns	Phi (N)	Wentworth Size Classification	
Use Wire Squares	4096	4,096,000	-20	Boulder	GRAVEL
	1024	1,024,000	-10		
	256	256,000	-8		
				Cobble	
	64	64,000	-6		
				Pebble	
	16	16,000	-4		
5	4	4,000	-2		
				Granule	
6	3.36	3,360	-1.75		
7	2.83	2,830	-1.50		
8	2.38	2,380	-1.25		
10	2.0	2,000	-1.00		
				Very Coarse Sand	SAND
12	1.68	1,680	-0.75		
14	1.41	1,410	-0.50		
16	1.19	1,190	-0.25		
18	1.00	1,000	0.00		
				Coarse Sand	
20	0.84	840	0.25		

25		0.71		710		0.50	
30		0.59		590		0.75	
35		0.50		500		1.00	
							Medium Sand
40		0.42		420		1.25	
45		0.35		350		1.50	
50		0.30		300		1.75	
60		0.25		250		2.00	
							Fine Sand
70		0.210		210		2.25	
80		0.177		177		2.50	
100		0.149		149		2.75	
120		0.125		125		3.00	
							Very Fine Sand
140		0.105		105		3.25	
170		0.088		88		3.50	
200		0.074		74		3.75	
230		0.0625		62.5		4.00	
							Coarse Silt MUD
270		0.053		53		4.25	
325							

		0.044		44		4.50	
Analyzed by Pipette or Hydrometer		0.037		37		4.75	
		0.031		31		5.0	
							Medium Silt
		0.0156		15.6		6.0	
							Fine Silt
		0.0078		7.8		7.0	
							Very Fine Silt
		0.0039		3.9		8.0	
							Clay (Note: Some use 2: (or 9N) as the clay boundary.)
		0.0020		2.0		9.0	
		0.00098		0.98		10.0	
		0.00049		0.49		11.0	
		0.00024		0.24		12.0	
		0.00012		0.12		13.0	
		0.00006		0.06		14.0	

Table 2
Modified Burmister System Descriptors

Fractions		Proportion Descriptors		
(+)	Major Fraction	Quantity	Descriptor	Abbreviation
(-)	Minor Fraction	35% - 50%	and	a
e.g., a medium to coarse SAND which is predominantly medium grained would be written as: m(+) - c SAND		20% - 35%	some	s
		10% - 20%	little	l
		1% - 10%	trace	t
		Modifiers: (+) Upper a of the range (-) Lower a of the range		

Table 3
Plasticity of Sediment Samples

Material	Symbol	Feel	Ease of Rolling Thread	Minimum Thread Diameter	Plasticity Index	Plasticity
Clayey SILT	CyM	Rough	Difficult	1/4"	1 to 5	Slight (Sl)
SILT & CLAY	M & C	Rough	Less Difficult	1/8"	5 to 10	Low (L)
CLAY & SILT	C & M	Smooth, dull	Readily	1/16"	10 to 20	Medium (M)
Silty CLAY	MyC	"Shiny"	Easy	1/32"	20 to 40	High (H)
CLAY	C	Waxy, very shiny	Easy	1/64"	40 +	Very High (VH)

Table 4
Density and Cohesiveness of Sediment Samples

Density of Cohesionless Soils		Consistency of Cohesive Soils	
Blow Counts	Relative Density	Blow Counts	Consistency
0 to 4	Very Loose	0 to 2	Very Soft
5 to 9	Loose	2 to 4	Soft
10 to 29	Medium Dense	4 to 8	Medium
30 to 49	Dense	8 to 15	Stiff
50 to 79	Very Dense	15 to 30	Very Stiff
80 or more	Extremely Dense	30 or more	Hard

Table 5
Description of Sediment Properties

Sediment Parameter	Properties
Color	The color of the sample should be described for the wet sediments. If possible the color should be referenced to a standard color chart such as a Munsell7 Color Chart.
Primary Grain Size	Primary grain size refers to the size of the predominant sedimentary size class within the material (as judged visually). The grain size divisions should conform to the standard Wentworth Scale divisions, as shown in Table 1.
Secondary Grain Size(s)	Secondary grain size(s) refer to material which, as a grain-size group, comprises less than the majority of the sediment. Aside from stating the size classification, the relative percentage of the material must be stated. The grain size divisions should conform to the standard Wentworth Scale divisions as shown in Table 1. To describe the approximate percentage of the secondary grain size(s) present, qualifiers shown in Table 2 should be used.
Moisture Content	The moisture content of the sample should be described as dry, slightly moist, moist, or wet. Gradation from one state to another should be recorded as, for example, moist to wet, or moist ÿwet.
Sorting	The relative degree of sorting of the sediment should be indicated as poor, moderate, good, or very good. The degree of sorting is a function of the number of grain size classes present in the sample; the greater the number of classes present the poorer the sorting. In addition, for samples composed only of sand, the relative degree of sorting is a function of the number of sand-size subclasses present.
Sphericity	Sphericity is a measure of how well the individual grains, on average, approximate a sphere. The average sphericity of the sand and larger size fractions should be described as low, moderate or high. A chart illustrating various degrees of sphericity is presented in Figure 1.
Angularity	Angularity, or roundness, refers to the sharpness of the edges and corners of a grain (or the majority of the grains). Five degrees of angularity are shown in Figure 1: Angular (sharp edges and corners, little evidence of wear); Subangular (edges and corners rounded, faces untouched by wear); Subrounded (edges and corners rounded to smooth curves, original faces show some areas of wear); Rounded (edges and corners rounded to broad curves, original faces worn away); and, Well Rounded (no original edges, faces, or curves, no flat surfaces remain on grains).
Sedimentary Structures	Sedimentary structures are such things as varved layers, distinct bedding, or stratification.
Density -or- Cohesiveness	The density of cohesion of a sample (for the purposes of this application) refer to the sample's resistance to penetration by a sampling device. Density is used in reference to sediments primarily silt-size and coarser while cohesiveness is used in reference to primarily clay-sized sediments. Density or cohesiveness can be assessed from the number of blows from "standard" split-spoon sampling (i.e., 140# hammer, 30" fall, 2" X 2" (O.D., 1 3/8" I.D.)) split-spoon samplers according to the scale in Table 3.

Standard Operating Procedure
for
Liquid and Sludge Sampling from Drums, Tanks, and Pits

SOP ID: 10027
Date Initiated: 9/2/97

Approved By: _____ _____
Name 1 **Date**

_____ _____
Name 2 **Date**

REVISION RECORD

Rev #	Date	Additions/Deletions/Modifications

Standard Operating Procedure
for
Liquid and Sludge Sampling from Drums, Tanks, and Pits

1. Statement Of Purpose

This document discusses procedures for collection of liquid and sludge samples from drums, tanks and pits for laboratory analysis. Methods for quality assurance/quality control requirements are included in a separate SOP.

2. Equipment

2.1. Equipment required for the collection of samples shall include:

- Stainless steel spatula (spoon, scoop, trowel, etc.)
- Sample collection devices, including the following:
- Polyethylene or stainless steel beaker
- Long-handled scoop
- Coliwasa tube
- Drum thief
- Hand auger
- Polyethylene bailer
- Teflon bailer
- Bomb sampler
- Peristaltic pump
- Bailer twine
- Distilled water and decontamination fluids
- Hand towels
- Polyethylene plastic sheeting
- Sample collection jars

- Clean disposable gloves
- Field documentation paperwork
- Indelible marker
- Cooler, cold packs and maximum/minimum thermometer
- Custody seals and sample labels

2.2. Cleaning and Decontamination

2.2.1. Prior to collecting samples, the LEA representative will ensure that all necessary sampling equipment is clean and decontaminated according to the site specific work plan or collection method SOPs.

2.2.2. Upon completion of all sampling requirements and prior to leaving the site, all equipment used for sampling shall be cleaned and decontaminated. All generated decontamination fluids shall be managed and disposed of in accordance with the site specific work plan and all municipal, state and federal requirements.

3. Sampling Protocols

3.1. Preliminary Sampling Procedures

3.1.1. Sample Bottles

3.1.1.1. A Laboratory Request Form shall be completed and submitted to the laboratory with following information:

- Project
- LEA commission number
- Date of submittal and date needed
- Quantity of sample locations and sample points at each location
- Type(s) of samples
- Analytes, detection limits and QA/QC needed
- Cooler(s) required
- Number of Chain-of-Custody forms requested

3.1.1.2. Check bottles against Laboratory Request Form for completeness. The bottles should also be checked for damage and cleanliness. Confirm with laboratory personnel the adequacy of the preservatives used.

3.1.1.3. Label all bottles prior to sampling with the information and check for accuracy. This step may also be performed in the field prior to sample collection.

3.1.1.4. The total number of sample sets shall be increased by 10% to allow for possible breakage during transport to sites or other contingencies (minimum: one additional sample bottle set per event).

3.1.1.5. A cooler with adequate ice or cold packs should be obtained from the laboratory to ensure that the collected samples remain at 4°C during transport. Packing material should also be obtained to ensure against breakage during transport.

3.1.2. Site Preparation

3.1.2.1. Polyethylene sheeting shall be laid on the ground in the vicinity of the sample collection location.

3.1.2.2. Decontaminated liquid and sludge collection devices shall be wrapped in aluminum foil and placed in a convenient location. prelabelled sample bottles shall be placed in a convenient location and in order of sample collection.

3.2. Sampling Procedures

3.2.1. All personal protective equipment (PPE) should be donned and maintained in accordance with the site specific work plan or health and safety plan during all sampling procedures. In the event that no PPE has been specified for a particular sampling event, disposable latex gloves should be donned, as a minimum during all sampling procedures.

3.2.2. Sludges and liquids from drums, pits, and tanks may be taken as discrete or composite samples. Composite samples will consist of several smaller liquid or sludge samples taken at various points and depths of the drum, tank or pit. During sample collection it may be observed that liquids and/or sludges are layered as a result of differential settling rates or different

densities across the media. If layering is encountered, where feasible and appropriate, collection of discrete samples from each layer will be attempted.

3.2.3. Sludges or liquids in drums and small containers are generally collected using glass coliwasa tubes or drum thieves. These tubes provide a representative sample and allow a cross-sectional view of the material inside the drum. The sample is transferred directly from the tubes to the sample containers.

3.2.4. For more viscous liquid or sludge samples, a long-handled scooping device may be used to scoop the material from the drum, pit, or tank.

3.2.5. In some instances, it may be desirable to use a pump to transfer liquids from a pit or tank to a sample container. In these instances, care will be taken to prevent overfilling of sample containers.

3.2.6. The following steps are taken for liquid or sludge sampling of a drum, pit, or tank with simple devices:

3.2.6.1. The sample area, including recognizable features, is sketched and/or described on the daily field report supplemental sheet for future reference.

3.2.6.2. A sampling device is selected and used to collect the sample.

3.2.6.3. A liquid sample is transferred directly into an appropriate prelabelled sampling bottle. Depending on the viscosity of a sludge sample, a stainless steel spoon, scoop, or spatula may be needed to transfer the material into the sample container.

3.2.6.4. Care will be exercised during sample collection and transfer to sample containers to minimize spillage of the sampled materials. Where material is spilled, it will be collected and cleaned-up immediately.

3.2.6.5. The cap is tightly secured and the sample is placed in an ice packed cooler.

3.2.6.6. Where a tank or drum was opened to allow for sample collection, the openings will be closed and re-secured.

3.3. Post-Sampling Procedures

3.3.1. Should the laboratory be local, transport the samples directly to the laboratory. The representative of LEA should witness the verification of the Chain-Of-Custody and obtain a carbon copy for filing in the project notebook.

3.3.2. Should the laboratory be distant, arrange for transport with a reputable carrier service. The cooler and samples shall be secured for transport, and all mailing documentation secured onto the top of the cooler. Unless otherwise specified, delivery shall be overnight. A request for confirmation of acceptance should be made to the carrier at the time of pick-up.

3.4. Documentation

3.4.1. The following general information will be recorded in the field log book and/or on appropriate field forms:

- Project and site identification
- LEA commission number
- Site location
- Field personnel
- Name of recorder
- Identification of sampling locations
- Collection method
- Date and time of collection.
- Types of sample containers used, sample identification numbers and QA/QC sample identification
- Preservative(s) used
- Parameters requested for analysis
- Field analysis method(s)
- Field observations on sampling event
- Name of collector
- Climatic conditions including air temperature
- Internal temperature of field and shipping (refrigerated) containers

- Chronological events of the day
- Status of total production
- Record of non-productive time
- QA/QC data
- Locations of samples on the site in sufficient detail to relocate samples at a future time (include sketch)

3.4.2. The following information will be provided on the sample label using an indelible pen:

- Date and time of collection
- Place of collection
- Parameter(s) requested (if space permits)
- Client name, location and LEA commission number
- Sample identification number

3.4.3. The following information will be recorded on the sample collection data sheet:

- Client name, location and LEA commission number
- Sample identification number
- Date and time of collection
- Depth/layer from which sample was obtained
- Container number or location of material sampled
- Description of material sampled
- Type of sampling device used

3.4.4. The following information will be recorded on the chain-of-custody record:

- Client's name and location
- Sample identification and/or number
- Date and time of collection
- Container type, number, size
- Preservative used
- Signature of collector

- Signatures of persons involved in the chain of possession
- Analyses to be performed
- Type and number of samples

3.4.5. The following information will be recorded on the Field Quality Review Checklist:

- Reviewer's name, date, and LEA commission number
- Review of all necessary site activities and field forms
- Statement of corrective actions for deficiencies

Standard Operating Procedure
for
Analysis of Dioxins in Soil Samples
Using the Cape Technologies
High Performance Dioxin/Furan Immunoassay Kit

SOP ID: 10052
Date Initiated: 6/29/01

Approved By: _____ _____
Name 1 **Date**

_____ _____
Name 2 **Date**

REVISION RECORD

Rev #	Date	Additions/Deletions/Modifications

Standard Operating Procedure for Analysis of Dioxins in Soil Samples Using the Cape Technologies High Performance Dioxin/Furan Immunoassay Kit

1. Statement of Purpose

This document describes procedures to be followed for rapid immunoassay specific extraction, one-step cleanup, and screening analysis at 500 ppt of PolyChlorinated DibenzoDioxins and PolyChlorinated DibenzoFurans (PCDD/Fs) in prepared sample extracts using an enzyme immunoassay kit.

2. Scope and Application

2.1. Method Summary

The method described in this document is a procedure for the analysis of PolyChlorinated DibenzoDioxins and PolyChlorinated DibenzoFurans (PCDD/Fs) in soil at 500 ppt (pg/g). This method uses an enzyme immunoassay (EIA) kit containing a polyclonal antibody specific for PCDD/Fs. The method is designed for the screening of samples according to their toxic equivalent concentration (TEQ) by responding to the toxic PCDD/F congeners in approximate correlation with their toxic equivalency factors (TEFs). The test is capable of multiple congener recognition and preferentially targets congeners with high TEF values; i.e., those with the highest toxicity relative to 2,3,7,8-tetrachlorodibenzo-p-dioxin (2,3,7,8-TCDD). The final measured EIA response is the sum of the individual congener responses. This response correlates with TEQ because the immunoassay cross-reaction profile for PCDD/Fs correlates with TEF values.

2.2. Sample Types

Environmental soil samples.

2.3. Summary of Procedure

Sodium sulfate and dimethylformamide (DMF) are added to soil samples and samples extracted by shaking for two hours. The supernatant DMF extract is removed from each sample. Interferences are removed by chemical oxidation. Hexane and fuming sulfuric acid are added to the DMF extract. The supernatant hexane is removed and evaporated to exchange sample to a water-miscible keeper solution. The immunoassay procedure is performed by adding a series of wash, conjugate, substrate, and stop solutions to prepared anti-dioxin antibody coated immunoassay tubes. The optical density of prepared samples is read using a spectrophotometer (450 nm). Results are interpreted by comparing the optical density (OD) values of standards to determine the level of PCDD/Fs in the samples.

3. Apparatus and Materials

Spectrophotometer	Fume hood
Orbital platform shaker	Evaporation manifold
Centrifuge	Compressed air
Lab jack	Pasteur pipettes and bulbs
Drummund Micropipettors	Eppendorf Repeater Pipettes
Hot plate	Test tubes 13 X 100 mm
Adjustable volume bottle dispensers	Test tube racks and grippers
Balance for weighing samples	Nitrile gloves
Absorbent pads	Alarm timer
Colored tape for labeling samples	Avery dots for labeling standards
Marking pen	Basin for capture of waste liquids

4. Reagents

Sodium Sulfate; reagent grade	Dimethylformamide; HPLC grade or better
15% Fuming Sulfuric Acid	Hexane; HPLC grade or better
Distilled water	

5. CAPE Technologies Immunoassay Kit Contents

Anti-Dioxin Antibody Coated Tubes	Competitor-HRP Conjugate
HRP Substrate Solution	Stop Solution
Triton X-100	Keeper stock solution

6. Standards and Check Samples

Standards provided by Wellington Labs.

6.1. Negative control: 80:20 methanol:tetraethylene glycol plus 100 ppm Triton X-100

6.2. Dioxin Standards: 0.064, 0.2, 0.64, and 2.0 ng/ml 2,3,7,8-TCDD in negative control in 1 mL glass ampoules

6.3. Check sample (1): 180 pg/ml 2,3,7,8-TCDD in 500 ul of toluene

6.4. Check sample (2): 600 pg/ml 2,3,7,8-TCDD in 500 ul of toluene

7. Sample Collection, Preservation and Handling

7.1. Sample Collection

7.1.1. Immunoassay testing products employ very small volumes and therefore, sample collection procedures must focus on the amounts and procedures necessary to ensure that the sample represents the source.

7.1.2. The distribution of PCDD/Fs can be extremely heterogeneous. The field sampler must ensure that soil samples are homogeneous and representative of the area from which they are taken. Care should be taken by the field sampler to avoid the inclusion of large particles (i.e. gravel and cobbles) into the sample jar.

7.1.3. Water content should be low enough to avoid the presence of standing water in sampling containers. If this is not possible, water should be removed by drying the soil sample on absorbent paper prior to placing in the sample jar.

7.1.4. Soil samples will be collected and transported in accordance with the Field Sampling Plan (FSP).

7.2. Safety Precautions

7.2.1. Treat PCDD/Fs, solutions that contain PCDD/Fs, and potentially contaminated samples as hazardous.

7.2.2. Use gloves, proper protective clothing, and means to contain and handle hazardous material where appropriate.

7.2.3. Handle Stop solution in 1N hydrochloric acid carefully.

7.2.4. Handle Fuming Sulfuric Acid carefully and store in appropriate laboratory acid cabinet.

7.3. Storage Use and Kit

7.3.1. Do not freeze test kit components

7.3.2. If desiccant in tube bag is not blue, do not use kit; contact manufacturer.

7.3.3. Do not expose substrate to sunlight.

7.3.4. If substrate is blue before adding to EIA tubes, do not use; contact manufacturer.

7.3.5. Store all test kit components at 2°C to 6°C when not in use.

7.3.6. Storage at ambient temperature (20°C to 27°C or 68°C to 81°C) on the day of use or overnight before the day of use is acceptable. Do not store at ambient temperature for extended periods.

7.3.7. Allow all reagents to reach ambient temperature before beginning the test. This typically requires at least 60 minutes at ambient temperature to warm from recommended storage conditions. Warming occurs faster if bottles and tubes are removed from the kit box.

7.3.8. Do not use test kit after the expiration date.

7.3.9. Do not use components from one test kit with components from a different test kit.

8. Quality Control

It should be noted that this procedure is strictly a *screening* procedure. No final decisions will be made based on the data. All final decisions will be based on fixed lab analysis using GC/MS procedures (EPA SW-846 Method 8290).

8.1. Quality assurance protocols will be maintained throughout each stage of the testing procedure; i.e., sample extraction, sample preparation and immunoassay analysis. Various QA actions check for failure at each of these points in the process.

8.2. A batch of samples will consist of up to 20 field samples prepared and analyzed at the same time, or the maximum number of samples that can be analyzed along with the standards, controls and other analyses using a single testing product, whichever is fewer. The batch must include any duplicate and/or replicate analyses as well as all additional quality control samples.

8.3. Routine quality control procedures associated with this method include the analyses of check standard, replicate analyses and method blanks. All the QA analyses must be conducted simultaneously as part of the same batch of samples.

8.3.1. Two toluene check samples at 180 pg/ml and 600 pg/ml 2,3,7,8-TCDD in 500 ul of toluene (supplied by Wellington Labs) will be analyzed per analytical batch to determine if the solvent exchange portion of the sample preparation has been performed properly.

8.3.2. One replicate sample will be analyzed per batch. The replicates can be run for any soil sample by pipetting a second 50 ul from the sample evaporation tube.

8.3.3. One method blank will be analyzed per batch. The method blank will be taken through the sample preparation, extraction and analysis steps.

8.3.4. Additional QA samples may be analyzed at the analyst's discretion. A positive (>500 ppt) and a negative (<500 ppt) extract from the Centerdale Manor Restoration Superfund Site have been archived and may be used as additional QA controls. These samples have been extracted from soil samples collected from the Site. The samples were analyzed by fixed lab analysis using EPA SW-846 Method 8290.

8.4. Additional Quality Control Considerations

8.4.1. Samples which appear milky during the first EIA incubation should not be analyzed by this immunoassay screening procedure. The sample may contain more oil than can be tolerated by the test.

8.4.2. Response values for 2,3,7,8-TCDD standards typically should be in the ranges given in Table 1.

8.4.3. If a blue color does not develop in the negative control test tube within 15 minutes after adding the substrate solution, the test is invalid and must be repeated. If the problem persists; contact the manufacturer.

8.4.4. The antibody used in this immunoassay procedure recognizes PCDD/F congeners based on structure, not mass. Therefore, conventional stable isotope labeled internal standards are detected as native material. Typical levels of conventional stable isotope labeled internal standards can not be used with the EIA.

9. Suggestions for Pipettor Use

9.1. Use a different tip for each reagent dispensed with the Eppendorf Repeater Plus Pipettor to avoid reagent cross-contamination, especially between conjugate and substrate.

9.2. Draw the desired reagent into the Repeater Pipettor and dispense at least one portion of reagent back into the container to properly engage the ratchet mechanism. If this is not done, the first volume delivered will be inaccurate.

9.3. When adding reagents to the EIA tubes using the Repeater Pippetor, direct the liquid stream down the side of the tube just elow the rim to avoid splashback.

9.4. When using the glass capillary positive displacement pipettor for adding samples or standards to EIA tubes, the solution must be <u>dispensed directly into the water in the tube, not above the liquid level or onto the side of the tube</u>. The tubes must be individually mixed immediately after the addition of methanol-TEG solutions to distribute the analyte evenly and to avoid locally high or low concentratins at the anitibody coated surface of the tube.

9.5. When using the capillary positive displacement pipettor for standards and samples, repeatedly rinse both inside and outside of the capillary by pipetting several methanol aliquots to a waste container. When changing capillaries, rinse the plunger to minimize carryover. If capillaries are not changed after each standard, water on the outside of

the capillary must be removed to avoid contamination (or dilution) of the standard with the water.

10. Preparation of PCDD/F Sample Keeper Solution from Stock

10.1. Locate the 8 ml vial labeled TEG-Triton X-100 keeper and stand upright for several minutes (or centrifuge briefly) to allow TEG-Triton mixture to drain away from lid. Make working solution of keeper by adding 6.0 ml of analytical grade methanol to the vial and mixing thoroughly. This solution of 100 ppm Triton

10.2. X-100 in 80/20 methanol/TEG will be used for adding keeper to extracts prior to solvent exchange.

11. Calibration and Standardization

11.1. An initial calibration must be performed concurrent with the analysis of any samples.

11.2. The initial calibration will consist of standards at a minimum of three concentrations that describe the quantitation range of the assay and span the regulatory limit of interest, 500 ppt. PCDD/F calibrators are provided by the manufacturer.

11.3. Initial calibration will consist of four dioxin standards at concentrations of 0.064, 0.2, 0.64, and 2.0 ng/ml 2,3,7,8-TCDD in negative control (50 ml per EIA tube). The acquired results will be compared with Table 1 in this SOP.

11.4. One negative control "zero standard" will be analyzed per analytical batch (80:20 methanol:tetraethylene glycol plus 100 ppm Triton X-100) to calculate percent of negative control values.

11.5. The entire dose response of the competitive immunoassay (absorbance) will be plotted on the y-axis against the concentration on the x-axis using a Microsoft Excel Workbook file provided by the manufacturer. The resulting calibration curve will be sigmoidal when plotted on the semi-log paper. Since the immunoassay is competitive, the blank (zero standard) will yield the highest response, with the color development inversely related to the standard concentration.

11.6. Immunoassay response curves are intrinsically sigmoidal in shape. Proper curve fitting allows accurate quantitation over a large portion of the curve. The four parameter equation given below represents the method used for fitting the calculated curve to the actual data. A new standard curve must be included in each EAI run used for quantitative analysis.

$Y=((A-D)/(1+(X/C)^B))+D$; where:

X=pg per EIA tube (2,3,7,8-TCDD for standards, TEQ for samples)	
Y=normalized EIA response (OD as % of NC OD)	
A=Y value of upper asymptote	C: X value of midpoint of curve
B=degree of curvature (negative slope of middle region)	D: Y value of lower asymptote

12. Procedure

12.1. Soil Sample Preparation

12.1.1. Using wooden spatula, mix sample thoroughly and weigh 5 g into 40 mL extraction vial. Include quality assurance samples to verify method performance (unspiked and spiked method blanks and reference soils as applicable) at this point.

12.2. Soil Sample Extraction

12.2.1. Add 15-20 g anhydrous sodium sulfate to extraction vial and mix with wooden spatula until sample is free flowing.

12.2.2. Add 3 steel mixing balls

12.2.3. Add 15 mL DMF.

12.2.4. Cap vials tightly and extract by shaking 2 hours at 350 rpm on orbital platform shaker. Extraction vials should lie flat on their sides for maximum agitation.

12.2.5. Centrifuge extraction vial for 10-15 minutes at 1000 x g or less.

12.2.6. Remove supernatant DMF extract to a clean vial with Teflon lined cap for storage.

12.3. Oxidation and Solvent Exchange

12.3.1. Remove a 180 ul aliquot of DMF extract and transfer into an 8 mL oxidation vial.

12.3.2. Prepare Negative Control: add 180 uL DMF

12.3.3. Prepare 20 Control – add 6 uL of 10 ppb control standard to 180 uL of DMF

12.3.4. Prepare 50 Control – add 15 uL of 10 ppb control standard to 180 uL of DMF

12.3.5. Centerdale Extract Controls –add 180 ul of DMF extract from desired extract(s). (33 ppt, 360 ppt (negative controls), 1400 ppt, 7300 ppt positive controls))

12.3.6. Add 6 mL of hexane.

12.3.7. Using a glass pipette, slowly add 1.8 mL of fuming sulfuric acid.

12.3.8. Cap sample oxidation vial tightly and mix for 15 minutes at 350 rpm on orbital platform shaker. Oxidation vials should lie flat on their sides for maximum agitation

12.3.9. Centrifuge oxidation vials to separate phases completely for 5 minutes at 1-2000 x g.

12.3.10. Remove as much hexane supernatant as possible without disturbing the lower layer.

12.3.11. If supernatant is contaminated with the reddish brown lower phase, re-centrifuge sample and repeat step above.

12.3.12. Transfer the recovered hexane in a small round bottom glass tube (13 x 100 mm).

12.3.13. Add 150 µL of keeper solution to each evaporation tube.

12.4. Solvent Evaporation

12.4.1. Evaporate the hexane at 40-50°C under a gentle stream of zero grade compressed air.

12.4.2. When only keeper remains, centrifuge at 1-2000 x g for 2 minutes to concentrate the sample at the bottom of the tube.

12.5. Immunoassay Procedure

12.5.1. **Warm reagents**: Bring all reagents to ambient temperature. (Note: Conjugate is only reagent which is stored under refrigeration)

12.5.2. **Prepare Tubes**: Place the anti-Dioxin antibody coated tubes in the rack and label them. Put the standards tubes first from low to high concentration, then control sample tubes, followed by QA tubes (i.e. method blanks), and finally field sample tubes.

12.5.3. **Pre-rinse tubes**: Rinse tubes once by filling each tube with distilled water. Dump out and tap inverted tubes on absorbent material to remove excess water. Tubes are rinsed to remove preservative. Once hydrated, do not allow.

12.5.4. Add water: Dispense one 500 ul aliquot of distilled water to each tube.

12.5.5. **Add standards**: Using a glass capillary positive displacement pipettor, transfer 50 uL of standard solution into each EIA standard tube *below* the surface of the water. Mix each tube briefly until it appears homogeneous. (Standard concentrations 0, 0.064, 0.2, 0.64 and 2.0 ng/ml of 2,3,7,8-TCDD)

12.5.6. **Dilute prepared field sample with methanol**: by adding 120 µL of methanol to each evaporation tube and mix vigorously for 15 sec. *(Dilution and EIA loading should be done in batches of 4 samples or fewer to minimize concentration changes due to methanol evaporation before pipetting.)*

12.5.7. Remove a 50 µL aliquot from the evaporation tube and add it directly *below* the water in the appropriately labeled EIA tube.

12.5.8. Immediately after addition, mix each tube briefly until appearance is homogeneous.

12.5.9. Mix the entire rack of tubes for **10 seconds** after adding the last sample. The mixing should be vigorous enough to visibly swirl the liquid around the bottom of the tubes.

12.5.10. Incubate samples at room temperature for **2 to 24 hours**. Cover tubes with parafilm during incubation.

12.5.11. **Post Incubation Procedure**: empty tube contents into waste container.

12.5.12. **Wash 4 times**: by adding 1.0 mL distilled water plus 0.01% Triton X-100 to each tube for each wash. Tap inverted tubes on absorbent material to remove excess water.

12.5.13. **Add Conjugate**: add 0.5 mL of Competitor HRP Conjugate to each tube. **Let stand 15 minutes**

12.5.14. **Wash 4 times**: by adding 1 ml distilled water per tube for each wash. Tap inverted tubes on absorbent material to remove excess water.

12.5.15. **Add Substrate**: Add 0.5 mL of HRP Substrate to each tube. Let stand **30 minutes.**

12.5.16. **Add Stop Solution**: Add 0.5 mL of Stop Solution to each tube.

12.5.17. **Read OD**: wipe outside of each tube to dry and read OD of entire batch immediately. Record OD readings for each standard and sample.

13. DATA REDUCTION AND INTERPRETATION

13.1. A Microsoft Excel workbook file provided by the manufacturer will be used to fit a four parameter curve to standard data; accurately interpolate EIA sample results from the standard curve; calculate the original sample dioxin concentrations from sample amounts and EIA results; and correctly interpret results for screening applications

13.2. Open Calculation Module C (Microsoft Excel workbook downloadable from CAPE Technologies web site [www.cape-tech.com] or available by special arrangement).

13.3. Select the "AN-007" worksheet.

13.4. Enter optical density (0D) data for standards and samples into designated spaces.

13.5. Perform non-linear curve fitting procedure using Excel "Solver" function.

13.6. Verify sample load (20 mg sample equivalent per EIA tube) and decision level (500 ppt).

13.7. Modify calibration adjustment factor if necessary for specific sample group.

13.8. Read ppt values and/or positive

14. Transfer final data into the LEA Management Information Systems (LEA MIS) database

14.1. Save the Microsoft Excel workbook as a .dbf file.

14.2. Transfer the file into the LEA MIS database system using the electronic file transfer utility program.

TABLE 1

Standard Curve Data

Standard curve data response values are expressed as a percentage of the negative control, which is 100 pm triton X-100 in 80:20 methanol-TEG. The detection limit is approximately 4 pg per EIA tube.

Standard Number	**1**	**2**	**3**	**4**
Ng/ml 2378-TCDD in standard	0.064	0.2	0.64	2
Pg 2378-TCDD per EIA Tube	3.2	10	32	100
Mean percent of negative control (%NC)	87	66	41	29
Standard deviation (SD)	6	7	7	6
Range of mean +/_SD	(74-99)	(51-80)	(27-55)	(17-40)

APPENDIX H

Dam Basis of Design Report

APPENDIX H

Dam Basis of Design Report

BASIS OF DESIGN REPORT

ALLENDALE DAM RECONSTRUCTION
NORTH PROVIDENCE, RHODE ISLAND

July 2001

Prepared for

Loureiro Engineering Associates Inc.
100 Northwest Drive
Plainville, Connecticut 06062

by

GEI Consultants, Inc.
1021 Main Street
Winchester, MA 01890

Project 01179

_____
Senior Engineer

1 INTRODUCTION

1.1 PURPOSE AND ORGANIZATION OF THE REPORT

The purpose of this report is to summarize the basis for design for reconstruction of Allendale Dam. This design is part of a Non-Time Critical Action Plan for the site. The existing site is a superfund site regulated by the United States Environmental Protection Agency – Region I (EPA). The existing dam has a partial breach that has reduced the upstream pool level and may allow migration of sediment downstream. The purpose of the design is to:

1. Reconstruct the dam to control flow from the upstream pool and minimize migration of sediment,
2. Minimize excavation/disturbance of contaminated soils required to construct the dam,
3. Maintain public safety,
4. Revise design to include provisions for a future fish ladder and replace stop logs with a sluice gate per EPA request, and
5. Allow future cosmetic reconstruction of dam elements not require to meet objectives 1 to 4.

The report consists of sections 1 – Introduction, 2 – Design Elements, and Appendix A –Calculations.

1.2 SITE LOCATION AND DESCRIPTION

This section is limited to features at the site that relate to the dam design. Refer to the implementation plan for a more detailed description of the site. Allendale Dam is located across the Woonasquatucket River in North Providence, Rhode Island. The existing dam consists of timber buttresses supporting timber planking with a soil/sediment berm on top of the planking. It appears that the buttresses bear on timber cribbing/mat that bears on bedrock or on dense soils above bedrock. A portion of the planking and buttresses has failed resulting in a partial breech of the dam. The dam is approximately 100 feet long, and ten feet high. Historically the dam operated as a non-gated overflow weir. The dam crest is approximately El. 93.5 ft. All elevations are referenced to National Geodetic Vertical Datum of 1929 (NGVD). An existing low-level outlet consisting of a reinforced concrete structure with a wooden gate is not operational. The low-level outlet is the connection between the dam and the left abutment. The right abutment of the dam consists of a granite block retaining wall. The granite block wall is failing with large gaps visible between the granite blocks.

1.3 MODIFICATION OF EXISTING DAM REHABILITATION DESIGN

The United States Army Corps of Engineers (USACE) prepared a design for the reconstruction of Allendale Dam (USACE, 1995b). The design would remove the existing wood timber dam and replace it with a reinforced concrete dam consisting of a footing and cantilever wall supporting an earth berm on the upstream face of the wall. The intent of the USACE design was to replicate the geometry of the original dam. The USACE design included repairs to the low-level outlet, removal of non-operational gate and installation of stop logs to replace the gate, reconstruction of the right abutment wall, and miscellaneous site work to seed and restore the upstream berm and work area. Stream diversion in the original design consisted of phased construction using berms and the repaired outlet structure as a stream diversion channel. The upstream berm height was set at El 93.5 (historic crest height). The original stream diversion plan could pass between a one-year and two-year recurrence interval storm event.

The USACE design was modified consistent with the goals in 1.1 to include:

1. Relocate the dam downstream of the existing dam,

2. Reduce footing size using rock anchors for stability,
3. Replace stop logs with a sluice gate,
4. Re-design right abutment, and
5. Provide provisions for a future fish ladder.

The phases of the stream diversion plan were modified slightly, however the new plan provides the same level of protection as the original plan. The protection falls within guidelines for stream diversion as discussed in 2.4.

The dimensions of the low-level outlet at the gate location are not known. The condition of the concrete at the gate location is not known. The height of the gate will be controlled by the space that it can operate in. Sluice gates cannot be raised higher than the bottom of the gate operator. The operator would be attached to the top of the existing structure. During Phase I construction the Contractor (Loureiro Engineering Associates Inc.) and the Dam Engineer (GEI Consultants, Inc.) will prepare a detail for construction of the gate. Our current design shows a demolished opening, to allow flow through the outlet, consistent with the original design. The size of the gate and the size of the demolished opening may be reduced based on the practical constraints at the opening.

1.3 PROPOSED CONSTRUCTION SEQUENCE

The Contractor may revise the proposed construction sequence following approval from the Dam Engineer. The proposed construction sequence is:

1. Establish erosion and sediment controls and clear and grub,
2. Install phase I cofferdam and repair low-level outlet,
3. Prepare gate detail with manufacturer,
4. Install Phase II cofferdam and excavate to top of rock,
5. Confirm top of rock and rock quality,
6. Install dam footing
7. Install rock bolts,
8. Construct dam wall,
9. Place lean concrete upstream of dam,
10. Use clean gravel fill from cofferdams and gravel access road to backfill upstream and downstream of the dam,
11. Install new gate,
12. Install stone protection layer, and
13. Restore site.

2 DESIGN ELEMENTS

Appendix A contains design calculations discussed in this section. The index for the design calculations is located at the beginning of the appendix. Specific references to pages in the calculations use the following format: A-4.22 (Appendix A, Section 4, page 22).

2.1 Geotechnical Analyses

2.1.1 Assessment of Subsurface Geotechnical Information

Due to the compressed schedule for this design GEI did not perform any borings. Our evaluation of subsurface conditions consisted of review of record documents (International Technology Corporation, 1999, Liao Associates, Inc., 1993, USACE, 1995b, and USGS, 1959) and our site visit to map rock outcrops (GEI Consultants, Inc., 2001.). A detailed discussion of our evaluation is contained in Section 4 of Appendix A.

We reviewed the soil parameters used in the original design calculations (USACE, 1995b) and concluded that the values used were conservative. The existing soils consist of medium dense sand and gravel. Typically the soils become denser within two to three feet of bedrock. The assumed soil properties are appropriate for the clean gravel fill that will be placed behind the dam in some locations.

A GEI geologist visited the site on July 7, 2001 to hand transcribe boring logs from another EPA investigation and map visible rock outcrops near the dam site (A-4.21). Borings at the other EPA site (GEI Consultants, Inc., 2001) are located approximately ¾ to 1 mile from the dam and appear to be in a different rock formation. Based on USGS, 1959 and observed outcrops the bedrock at the site is part of the Westboro quartzite unit. USGS, 1959 describes this unit as massive to thin-bedded quartzite; with interbeds of greenish quartz -mica schist with a general dip of 45 degrees. The unit is estimated to be at least two thousand feet thick.

Rock properties were chosen based on geologic knowledge, engineering judgement, and published data (State of Rhode Island and Providence Plantations, 1988, Commonwealth of Massachusetts, 1997, and BOCA, 1988). Table 2.1 contains the geotechnical properties used in our analyses.

Table 2.1 Geotechnical Properties

Soil	Unit Weight (pcf)	Friction Angle (degrees)	Cohesion c (psi)	Allowable Net Bearing (tsf)
Fill upstream of dam	125	30	na	na
Bedrock	140	30	10	20

2.1.2 Stability Analysis

The results of our stability analyses are contained in Section 1 of Appendix A. The original design (USCAE, 1995b) used design guidelines for stability analysis of concrete structures (USCAE, 1991) and design of retaining and floodwalls (USCAE, 1989). We compared these criteria to USCAE, 1995a (Gravity Dam Design) and chose the more conservative design loading conditions. USCAE, 1995a lists the following design loads:

1. Unusual loading - construction,

2. Usual loading - normal operating conditions
3. Unusual loading condition - flood discharge,
4. Extreme loading – construction with Operating Basis Earthquake (OBE),
5. Unusual loading – normal operating with OBE,
6. Extreme loading – normal operation with Maximum Credible Earthquake (MCE), and
7. Extreme loading – probable maximum flood (PMF)

USCAE, 1995b (original design calculations) has 3 design loads, 1, 2, and 3 that correspond to USCAE, 1995a load cases 2, 3, and a modified 6 respectively. There is no PMF, OBE, or MCE data for the site. USCAE, 1995b, used an earthquake acceleration coefficient of 0.15g. We selected a earthquake acceleration coefficient of 0.34g from horizontal acceleration contour maps by USGS (Algermissen), 1990 with a 90% probability of not being exceeded in 250 years or approximately a 2500 year return interval. We used the same approach as the original design substituting the higher earthquake acceleration coefficient.

Our stability analyses considered:

1. Usual loading – normal operating conditions,
2. Unusual loading condition – flood discharge (100-year event), and
3. Extreme loading – normal operation with earthquake.

The reconstruction of the dam for this design may not completely backfill behind the upstream face to form the berm shown in the original design. Portions of the dam may have no fill along the upstream face of the dam. Our design assumed full fill to the top of the dam, full water pressure, and dynamic effects from both fill and water. Dynamic soil loads were determined using Mononobe-Okabe equations from USCAE, 1989. The vertical acceleration was assumed to be 2/3 of the horizontal acceleration (USCAE, 1989). Hydrodynamic loads were determined using Westergaard's formula (USACE, 1989). Westergaards hydrodynamic effects from water assume a freestanding wall and are conservative when applied to a wall retaining fill. We ignored hydrodynamic effects of the tailwater and passive resistance at the toe. Table 2.2 contains top of soil, water and rock parameters for each load case.

Table 2.2 Stability Design Parameters

Load Case	Headwater El. (ft)	Tailwater El. (ft)	Top of Fill El. (ft)	Top of Rock El. (ft)
1 – Usual	93.5	82.0	93.5	78.0
2 – Unusual	97.7	88.9	93.5	78.0
3 – Extreme	93.5	82.0	93.5	78.0

The stability analyses included the clamping action of the rock anchor to resist both sliding and overturning loads. Each load case was evaluated to determine the factor of safety against sliding, location of resultant at the footing base, foundation bearing pressures, and concrete stress levels (see Table 2.3 and A-1.6).

Table 2.3 Stability Design Criteria

Load Case	Resultant Location at Base	Minimum Sliding FS	Foundation Bearing Pressure	Concrete Stress Compression
1 – Usual	Middle 1/3	2	allowable	0.3 f'c
2 – Unusual	Middle ½	1.7	allowable	0.5 f'c
3 – Extreme	Within Base	1.3	1.33 allowable	0.9 f'c

Based on the above criteria the maximum anchor loads were determined to be 18.5 kips per lineal

foot (klf) during the unusual load case (Load Case 2).

2.1.3 Seepage Analysis

The results of our seepage analyses are contained in Section 4 of Appendix A. The existing dam consists of an earthen berm upstream of the timber dam. The dam appears to be supported on a 1-inch-thick timber mat that bears on rock or dense soils above the rock. Liao Associates, Inc., 1993 indicate that the soil grain size curves from laboratory testing are consistent with highly permeable soils and that the soils under the mat are also likely to be highly permeable. From USGS (Quinn), 1959 (A-4.29), the bedrock is considered massive to thin bedded with schist dipping at 45 degrees. Outcrops observed at the site (GEI Consultants, Inc., 2001, A-4.21) appear massive with minimum jointing. A weathered joint was observed in B-2.

Given the permeable nature of the soils under the dam and in the embankment, it is likely that seepage flow through the dam was controlled by flow under the dam, through the abutment, or through the timber plank seams rather than through the rock.

The new dam will be built on bedrock. The dam footing will be anchored into the rock using mechanically anchored rock bolts. The rock bolts will be installed through the dam foundation. This will compress the rock mass and tend to close any joints that may exist. The dam wall/footing connection includes a waterstop to prevent seepage.

The new right abutment wall consists of an extension of the dam into the existing abutment to a depth where the top of the dam meets existing grade.

Based on these features, it is our opinion that the new dam will be less permeable than the old structure. An additional feature is a layer of lean concrete placed over the upstream heel of the new dam. The purpose of the lean concrete is to provide fill between the upstream face of new dam and the downstream face of the old dam that will support the old dam buttresses, and to provide encapsulation of the anchor heads. It will also provide a layer of low permeability material between the heel of the foundation and the existing dam.

2.1.4 Evaluation of Excavation Limits

Based on Liao Associates, Inc., 1993 (pages A-4.44 and A-4.45) there may be up to 2 to 4 feet of soil below the timber mat supporting the timber dam. There is no documentation of the results of test augers performed at the toe of the dam. The conclusion regarding depth of soil below the dam appears to be based on the boring logs upstream of the dam. In boring B-1 located upstream of the existing dam at the centerline, the boring notes a wood plank at the top of the rock. B-2 is located upstream of the existing dam near the right abutment, the boring notes a wood plank approximately 4 feet above the top of rock (identified as schist). Dense materials including a granite (boulder) and weathered rock are encountered approximately 1 to 2 feet below the timber mat. SPT N values (blow counts) below the plank are N =32 and 18 (medium dense sand and gravel). Boring B-3 is located upstream of the dam and may be located in a historic sediment area outside of the river channel. Both borings B-4 and B-5 are downstream of the dam outside of the river channel in the left abutment. Both borings encountered medium dense to dense sand and gravel with high SPT values in the foot or so above refusal.

Borings from International Technology Corporation, 1999 also indicate high blow counts in the material immediately above the rock. A hand auger performed downstream of the dam (International Technology Corporation, 1999) encountered refusal in nested boulders approximately 1 foot below grade.

Based on B-1 and B-2 the timber mat appears to be founded on the rock or on dense sand and gravel above the rock. The dam is buttressed with the buttresses reacting against the mat (cribbing) at the toe. Although the timber mat may assist with sliding stability, it is our opinion that the timber mat is flexible enough that very little bearing loads will be transferred beyond the downstream edge of the buttress. It is our opinion that the material below the mat will support a near vertical cut for the potential 4 foot cut at the toe of the dam. In order to minimize the distance that the new dam moves downstream of the old dam, the heel of the new dam will be offset 1'-0" (at crest) from the downstream face of the old dams buttresses. This will require cutting some of the timbers beyond the toe of the dam. The Contractor and Dam Engineer will evaluate the need for shoring or underpining at the existing dam toe based on observed conditions in the field.

Excavation limits of one horizontal to one vertical are adequate for the remaining excavation in the dense sand and gravel. Excavation limits in other materials will be adjusted in the field.

2.1.5 Rock Anchors

Details of the rock bolt design can be found in Section 2 of Appendix A.

Anchor Bar Design

The rock anchors were designed using mechanically anchored high strength bar anchors. The anchors are hollow, which allows the grout to be injected down the center of the bar and tremie up the outside of the bar. This system provides enhanced encapsulation of the bar by the grout. The bar size was based on 50 % of the gross ultimate strength (GUTS), within PTI requirements of 60% of GUTS (PTI, 1997).

Corrosion Protection

USACE, 1980 Rock Reinforcement requires complete encapsulation of the rock bolt with grout for corrosion protection of permanent anchors. The mechanically anchored bars will be preloaded to 110 % of the design load and locked off at the preload prior to grouting. Therefore, elastic elongation of the bar, and tensile cracking of the grout, will not occur until loads occur that exceeds the preload. The bar chosen can loose 0.4 inches of bar around the edges (0.8 inch from diameter) and still provide the design capacity. It is our opinion that the oversized bar, and hollow bar grouting system provides adequate corrosion protection for the bar. The anchor plates will be galvanized. The end of the bar will be encapsulated in grease filled cover. Lean concrete fill placed on the heel of the footing will also encapsulate the anchor plate and bolt head that projects above the top of the footing.

Anchor Embedment

The depth of the drill hole and anchor embedment in the rock was taken as the larger of:

1) Depth required to transfer bond from the grout to the rock (8 feet),
2) Minimum embedment historically used in bolt applications (15 ft, Xanthakos, 1991), and
3) Practical length of available bars.

The specified bolts come in 50-foot lengths. Assuming 2 bolts at 25 feet length, a footing thickness of 30-inches, and one foot machined ends; the practical embedment is approximately 20 ft. We evaluated failure of the rock bolt using the bouyant weight of the rock failing upward from the mechanical bolt head. The failure plane formed a 90-degree cone (Xanthakos, 1991). Based on this analysis there is a factor of safety of at least 2 against cone failure.

2.2 Hydaulic Analysis

Results of hydraulic modeling were presented in the original design documents (USCAE, 1995b). There is insufficient information for us to develop additional models at this time. The new dam has the same crest length and crest height as the old dam. The repairs to the low-level outlet are consistent with the original design. Hence, it is our opinion that the revised design does not significantly alter the hydraulic behavior of the original design.

2.3 Structural Design

Details of the structural design can be found in Section 3 and 2 of Appendix A. Reinforced concrete strength design methods outlined in Strength Design For Reinforced Concrete Hydraulic Structures (ASCE, 1993) and ACI 318-95 (ACI, 1995). Load factors for analysis are summarized in Table 2.4

Table 2.4 Load Factors

Load Case	1 - Unusual	2 - Unusual	3 - Extreme
Load Factor	1.3*1.7*(DL+LL)	1.3*1.7*(DL+LL)	1.1*(DL+LL)+1.25*E

Cover for reinforcing is 4-inches per ASCE, 1993. Concrete 28-day compressive strength is specified as 5,000 psi to promote durability. A discussion of the design of individual elements follows.

2.3.1 Low Level Outlet

The low level outlet consists of an existing reinforced concrete gate structure with a wingwall approach and downstream training walls. The existing wooden gate is non-operational. The dimensions at the opening are not known. The condition of the concrete at the opening is not known. During Phase I the structure will be dewatered and the Contractor and Dam Engineer will determine the condition and dimensions at the opening. The Engineer will develop a detail for the new gate in consultation with the gate manufacturer. The gate will be installed at the end of Phase II work.

Repairs to the structure consist of chipping and repairing spalled and damaged concrete. The Engineer will develop additional details for unforeseen defects as required. The existing dam appears to be founded on timber mats bearing on the rock or dense soils above the rock. It is likely that the concrete structure bears on the rock. During Phase I construction the Contractor may attempt to verify foundation conditions. If the structure does not bear on rock, a pit underpinning sequence will be developed to support the structure during Phase II work.

2.3.2 Right Abutment Wall

The right abutment wall consists of rock masonry. The new right abutment wall will consist of an extension of the dam into the abutment. The dam will continue into the abutment until the top of the extension (set at EL. 99.95) matches existing grade. The extension includes a shelf to allow placement of a granite block façade to match the old wall. Excavation at the abutment will be limited to the minimum required to construct the new abutment. Granite blocks removed from the old wall will be stored on site for reuse.

The new abutment wall will be backfilled with lean concrete and compacted granular fill similar to the dam.

2.3.3 Foundation and Dam Wall

The dam consists of a 7'-6" wide foundation anchored to the rock and a 15'-6" stem wall cantilevering off the foundation. Some details of the foundation design were performed during design of the rock anchors to confirm that the proposed rock anchor spacing would not be a problem

for the structural design of the foundation (A-2.10 to A-2.14).

The footing was evaluated for loads developed during the stability analysis. The stem was evaluated using the three load cases developed for the stability analysis applied to the stem.

2.4 Stream Diversion

Stream diversion calculations are contained in Section 5 of Appendix A. From GEI Consultants, Inc., 1995, guidelines for stream diversion recommend a storm frequency interval range of between 5 and 25 times the construction duration. Using an estimated construction time of 2 months for Phase II work, the current diversion plan will provide a storm frequency interval that is at least 6 times the construction duration. Given the practical geometry of the site, it is our opinion that this is sufficient protection.

The stream diversion plan consists of two Phases.

2.4.1 Phase I – Stream Diversion

During Phase I work cofferdams consisting of sandbags and concrete blocks with plastic liners as required will be used to isolate the low-level outlet to allow repairs to the structure. Flow will continue through the existing breech in the dam.

2.4.2 Phase II – Stream Diversion

During Phase II work an earth and concrete block cofferdam will be placed upstream of the dam. The top of the cofferdam will be El. 93.5. Flow will be through the repaired low-level outlet. Concrete block cofferdams will be used downstream of the existing dam. After the dam is installed at the end of Phase II work, the upstream cofferdam will be removed to limits that prevent mixing of clean material and existing contaminated soils. This clean gravel fill will be placed on the upstream face of the new dam.

While the berms are being removed, a cofferdam will be reinstalled on the upstream end of the low-level outlet structure. The gate will be installed. Flow will be controlled as the dam impounds water or by the use of pumps as required to protect gate work.

2.5 Future Fish Ladder

GEI contacted the United States Fish and Wildlife Service (USFWS) to discuss fish ladder requirements for this site. We have not received detailed input from the USFWS to date. Based on our past experience we have designated the left abutment as the location of the future fish ladder. This spot was chosen for the following reasons:

1. Downstream of the low-level outlet there is a natural channel where the water is deeper and may have water in it during low flow events, attracting fish.
2. The ladder can be constructed as a flume leading from the upstream pool to the channel downstream of the low-level outlet.
3. Dimensions of the flume can be adjusted to meet requirements of the fish.
4. The entire fish ladder is accessible for maintenance.
5. Work can proceed with limited cofferdams on either end of the flume without significant impact on dam operations.
6. A water flow control structure can be set in the abutment where it is easily accessible.

3 REFERENCES

American Concrete Institute (ACI), 1995, Building Code Requirements for Structural Concrete, July, 1995

American Society of Civil Engineers (ASCE), 1993, Technical Engineering and Design Guides as Adapted from the US Army Corps of Engineers, No. 2 – Strength Design for Reinforced Concrete Hydraulic Structures, 1993.

Building Officials and Code Administrators, International, Inc. (BOCA), 1988, National Building Code, 1988.

Commonwealth of Massachusetts, 1997, The Massachusetts State Building Code (CMR 780), February, 1997.

Garifalo & Associates, Inc., 1993. Calculations (portions of design calculations provided by USACE under cover letter dated June 12, 2001), Calculations dated July, 1993.

GEI Consultants, Inc., 1995 Technical Design Memorandum No. 5.3 – Cedar Run Dam, October, 1995

GEI Consultants, Inc., 2001, Hand transcribed boring logs from EPA borings and rock mapping of outcrops, Centerdale, RI, July, 2001.

International Technology Corporation, 1999. Hand written boring logs and boring location plan (provided by USACE under cover letter dated June 12, 2001), Logs dated July, 1999.

Liao Associates, Inc., 1993. Geotechnical Engineering Report – Allendale Dam. N. Providence, RI (provided by USACE under cover letter dated June 12, 2001), February 1993.

Post Tension Institute, 1997. Post Tension Manual – Fifth Edition, 1997.

State of Rhode Island and Providence Plantations – Building Code Standards Committee, 1988. Rhode Island State Building Code, April 1, 1988.

USACE (U.S. Army Corp of Engineers), 1980. EM 1110-1-2907 – Rock Reinforcement, February, 1980.

USACE (U.S. Army Corp of Engineers), 1989. EM 1110-2-2502 – Retaining and Flood Walls, September, 1989.

USACE (U.S. Army Corp of Engineers), 1991. ETL 1110-2-256 – Sliding Stability for Concrete Structures, June, 1991.

USACE (U.S. Army Corp of Engineers), 1995a. EM 1110-2-2200 – Gravity Dam Design, June, 1995.

USACE (U.S. Army Corp of Engineers), 1995b. Design Calculations (Portions of original design provided by USACE under cover letter dated June 12, 2001), Calculations dated November and December, 1995.

USACE (U.S. Army Corp of Engineers), 1997. Contract Documents (11 – Drawings and Specifications) Reconstruction of Allendale Dam (provided by USACE), Drawings dated July, 1997.

USGS (Quinn), 1959. Geologic Quadrangle Maps of the United States, Bedrock Geology of the Providence Quadrangle, 1959.

USGS (Algermissen), 1990. Probabilistic Earthquake Acceleration and Velocity Maps for the United States and Puerto Rico, 1990

Xanthakos, Petros P., 1991, Ground Anchors and Anchored Structures, 1991.

APPENDIX A
DESIGN CALCULATIONS

Design calculations are separated into 5 sections as noted on the following index for calculations. An independent reviewer has checked all Calculations. The independent reviewer signs off on the calculations after discussing and resolving comments with the designer.

All calculations have been checked, and comments have been resolved with edits performed as required. However, the reviewer was not available to sign off all calculations prior to submission.

NOTE: Reference numbers within the calculations refer to a list of references at the start of each section. These numbers are not consistent from section to section.

GEI Consultants, Inc.

Project 01179 Page

Client LEA Date By

Subject ALLENDALE DAM Checked By

Index Approved By

Index of Calculations:

Subject	Section
Stability Analysis of Dam	1
Design of Rock Anchors	2
Reinforced Concrete Design	3
Geotechnical Data	4
Stream Diversion	5

GEI Consultants, Inc.

Project 01179 Page

Client LEA Date By

Subject ALLENDALE DAM Checked By

Index Approved By

Section 1: Stability Analysis of Dam

Subject	Pages
Design assumptions and geometry	1-10
Normal Pool	10-14
100 Year Flood	15-18
Earthquake	19-28

Φ GEI Consultants, Inc.

Client: LEA
Project: Allendale Dam
Subject: Stability

Project No.: 01179
~~Date: 6/01~~ By: MPW
Chkd: 6/28/01 By: MMC

Stability Analysis

Purpose: The Allendale Dam in North Providence, Rhode Island is being replaced with a new dam. The existing dam consists of timber framing with gravel fill behind the upstream face of the timber framing. The gravel fill soils upstream of the dam are contaminated, and the site is currently listed as a Superfund site. The existing dam has been breached allowing the migration of contaminated soils downstream. A new concrete gravity dam with earth backfill has been proposed downstream of the existing dam to stop the migration of the contaminated fill downstream. The following calculations are provided to evaluate the stability of the proposed replacement dam.

References:

1. EM 1110-2-2200 (June 1995) - Gravity Dam Design (see 1-3 to 1-6)
2. EM 1110-2-2502 (Sept. 1989) - Retaining and Flood Walls
3. ETL 1110-2-256 (June 1991) - Sliding Stability for Concrete Structures
4. Stability Calculations prepared by the Army Corps of Engineers for Allendale Dam - Initial Section dated 11/95 and Final Section dated 12/95.

Assumptions:

1. H&H data was not provided to GEI for design. Use design pool elevations provided in the Army Corp of Engineers calculations.
2. Use Army Corps of Engineers design load cases except do not combine dynamic soil loads and dynamic water loads in the same load case. These loading conditions can not be applied to the structure simultaneously.
3. Ignore passive resistance at the downstream toe. Scour to bedrock occurred downstream of the existing dam after the dam was breached. We will conservatively assume that this material will not be replaced during construction of the new dam.
4. Design dam as a gravity dam using a concrete retaining wall with fill behind. The concrete retaining wall will be anchored to the bedrock to resist sliding and overturning.
5. Use backfill properties from Ref [4].
6. Use frictional properties between wall and bedrock from Ref [4].
7. Ignore weight of soil and water on sloping face of wall for stability analyses.

Stability Analysis Load Cases

1. CASE 1 - Nomal Pool - Headwater @ El. 93.5, Tailwater @ El. 82.0
2. CASE 2 - 50 Year Storm - Headwater @ El. 97.1, Tailwater @ El. 88.9
3. CASE 3 - 100 Year Storm - Headwater @ El. 97.7, Tailwater @ El. 89.9
4. CASE 4 - Earthquake

Wall Geometry

Top of Wall Elevation $El_{top} := 93.5 \cdot ft$

Toe of Wall Elevation $El_{toe} := 80.5 \cdot ft$

Width at the Top of the Wall $w_{top} := 2 \cdot ft$

Width at the Bottom of the Wall $w_{bot} := 30 \cdot in$

Slope of Wall from Vertical $\theta := atan\left[\frac{(w_{bot} - w_{top})}{El_{top} - El_{toe}}\right]$ $\theta = 2.2 deg$

Wall Height = $h_{wall} := (El_{top} - El_{toe})$ $h_{wall} = 13.0 ft$

Φ GEI Consultants, Inc.

Client: LEA
Project: Allendale Dam
Subject: Stability

Project No.: 01179
Date: 6/01 By: MPN
Chkd: 6/28/01 By: MMC

Base Footing Properties

Top of footing elevation = $El_{ftop} := El_{toe}$

Bottom of footing elevation = $El_{ftoe} := 78 \cdot ft$

Width of footing = $w_f := 2.5 \cdot ft + w_{bot} + 2.5ft$ $\quad w_f = 7.5ft$

Footing Heigth = $h_f := El_{ftop} - El_{ftoe}$ $\quad h_f = 2.5ft$

Upstream Projection = $proj_{up} := 2.5 \cdot ft$

Downstream Protection = $proj_{down} := 2.5 \cdot ft$

Backfill/ Concrete/ Water Properties

Conservatively assume the following properties for the backfill soil.

Saturated Unit Weight = $\gamma_t := 125 \cdot pcf$

Internal Friction Angle = $\phi := 32 \cdot deg$

Unit Weight of Concrete = $\gamma_c := 150 \cdot pcf$

Unit Weight of Water = $\gamma_w := 62.4 \cdot pcf$

Earth Pressure Coeffcients

Compute the active earth pressure coefficient ignoring wall friction and considering a sloping wall with horizontal backfill. Use Coulomb Active Pressure Coeffcient to consider effect of sloping wall - See attached.

Wall Friction = $\delta := 0 \cdot deg$

Slope of Wall = $\theta = 2.2deg$

Soil Internal Fricton Angle = $\phi = 32.0deg$

Slope of Backfill from Horizontal $\alpha := 0 \cdot deg$

Compute active coefficient normal to the wall

$$K_a := \frac{\cos(\phi - \theta)^2}{\cos(\theta)^2 \cdot \cos(\delta + \theta) \cdot \left[1 + \sqrt{\frac{(\sin(\delta + \phi) \cdot \sin(\phi - \alpha))}{\cos(\delta + \theta) \cdot \cos(\alpha - \theta)}}\right]^2} \quad K_a = 0.322$$

Compute active coefficient for horizontal component

$K_a := K_a \cdot \cos(\theta)$ $\quad K_a = 0.322$

Frictional Properties at Wall/Bedrock Interface

Use frictional properties between wall and bedrock from Ref[4]

Friction Angle = $\delta_s := 30 \cdot deg$

Coefficient of Friction = $\mu := \tan(\delta_s)$ $\quad \mu = 0.58$

Apparent Cohesion = $c := 10 \cdot psi$

1-3

Chapter 4
Stability Analysis

4-1. Introduction

a. This chapter presents information on the stability analysis of concrete gravity dams. The basic loading conditions investigated in the design and guidance for the dam profile and layout are discussed. The forces acting on a structure are determined as outlined in Chapter 3.

b. For new projects, the design of a gravity dam is performed through an interative process involving a preliminary layout of the structure followed by a stability and stress analysis. If the structure fails to meet criteria then the layout is modified and reanalyzed. This process is repeated until an acceptable cross section is attained. The method for conducting the static and dynamic stress analysis is covered in Chapter 5. The reevaluation of existing structures is addressed in Chapter 8.

c. Analysis of the stability and calculation of the stresses are generally conducted at the dam base and at selected planes within the structure. If weak seams or planes exist in the foundation, they should also be analyzed.

4-2. Basic Loading Conditions

a. The following basic loading conditions are generally used in concrete gravity dam designs (see Figure 4-1). Loadings that are not indicated should be included where applicable. Power intake sections should be investigated with emergency bulkheads closed and all water passages empty under usual loads. Load cases used in the stability analysis of powerhouses and power intake sections are covered in EM 1110-2-3001.

(1) Load Condition No. 1 - unusual loading condition - construction.

(a) Dam structure completed.

(b) No headwater or tailwater.

(2) Load Condition No. 2 - usual loading condition - normal operating. (CASE 1)

(a) Pool elevation at top of closed spillway gates where spillway is gated, and at spillway crest where spillway is ungated.

(b) Minimum tailwater.

(c) Uplift.

(d) Ice and silt pressure, if applicable.

(3) Load Condition No. 3 - unusual loading condition - flood discharge. (CASE 2 & 3)

(a) Pool at standard project flood (SPF).

(b) Gates at appropriate flood-control openings and tailwater at flood elevation.

(c) Tailwater pressure.

(d) Uplift.

(e) Silt, if applicable.

(f) No ice pressure.

(4) Load Condition No. 4 - extreme loading condition - construction with operating basis earthquake (OBE). (CASE 4)

(a) Operating basis earthquake (OBE).

(b) Horizontal earthquake acceleration in upstream direction.

(c) No water in reservoir.

(d) No headwater or tailwater.

(5) Load Condition No. 5 - unusual loading condition - normal operating with operating basis earthquake.

(a) Operating basis earthquake (OBE).

(b) Horizontal earthquake acceleration in downstream direction.

(c) Usual pool elevation.

1-9

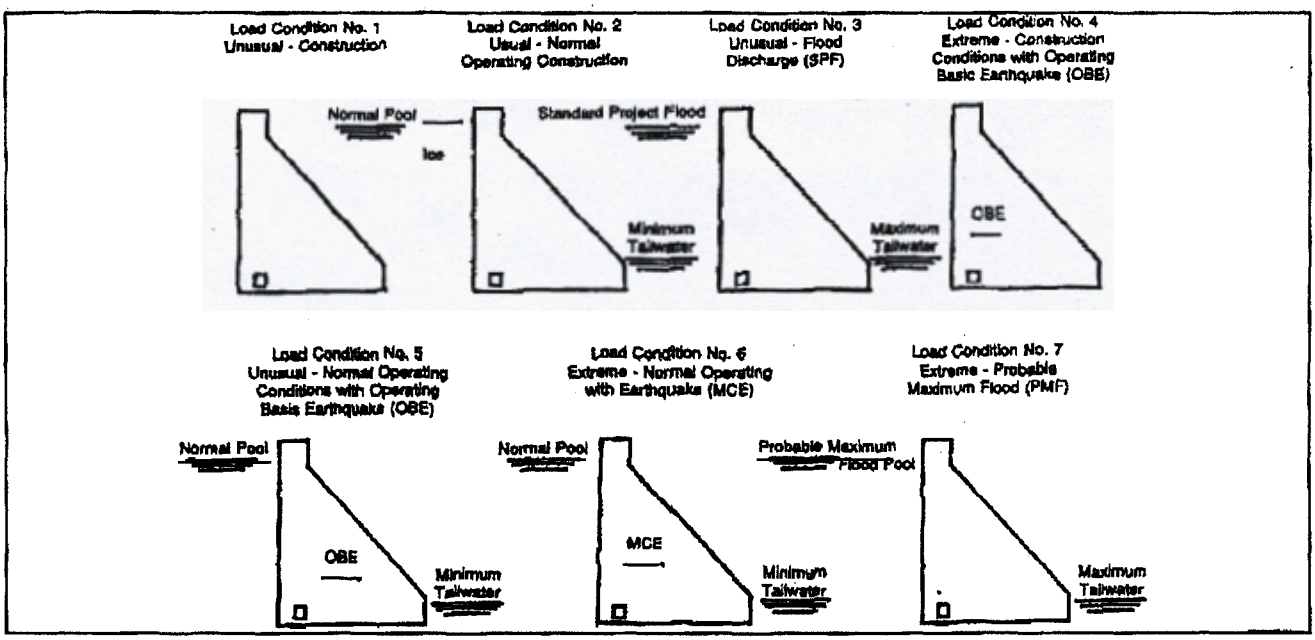

Figure 4-1. Basic loading conditions in concrete gravity dam design

(d) Minimum tailwater.

(e) Uplift at pre-earthquake level.

(f) Silt pressure, if applicable.

(g) No ice pressure.

(6) Load Condition No. 6 - extreme loading condition - normal operating with maximum credible earthquake.

(a) Maximum credible earthquake (MCE).

(b) Horizontal earthquake acceleration in downstream direction.

(c) Usual pool elevation.

(d) Minimum tailwater.

(e) Uplift at pre-earthquake level.

(f) Silt pressure, if applicable.

(g) No ice pressure.

(7) Load Condition No. 7 - extreme loading condition - probable maximum flood.

(a) Pool at probable maximum flood (PMF).

(b) All gates open and tailwater at flood elevation.

(c) Uplift.

(d) Tailwater pressure.

(e) Silt, if applicable.

(f) No ice pressure.

b. In Load Condition Nos. 5 and 6, the selected pool elevation should be the one judged likely to exist coincident with the selected design earthquake event. This means that the pool level occurs, on the average, relatively frequently during the course of the year.

4-3. Dam Profiles

a. Nonoverflow section.

(1) The configuration of the nonoverflow section is usually determined by finding the optimum cross section

that meets the stability and stress criteria for each of the loading conditions. The design cross section is generally established at the maximum height section and then used along the rest of the nonoverflow dam to provide a smooth profile. The upstream face is generally vertical, but may include a batter to increase sliding stability or in existing projects provided to meet prior stability criteria for construction requiring the resultant to fall within the middle third of the base. The downstream face will usually be a uniform slope transitioning to a vertical face near the crest. The slope will usually be in the range of 0.7H to 1V, to 0.8H to 1V, depending on uplift and the seismic zone, to meet the stability requirements.

(2) In the case of RCC dams not using a downstream forming system, it is necessary for construction that the slope not be steeper than 0.8H to 1V and that in applicable locations, it include a sacrificial concrete because of the inability to achieve good compaction at the free edge. The thickness of this sacrificial material will depend on the climatology at the project and the overall durability of the mixture. The weight of this material should not be included in the stability analysis. The upstream face will usually be vertical to facilitate construction of the facing elements. When overstressing of the foundation material becomes critical, constructing a uniform slope at the lower part of the downstream face may be required to reduce foundation pressures. In locations of slope changes, stress concentrations will occur. Stresses should be analyzed in these areas to assure they are within acceptable levels.

(3) The dam crest should have sufficient thickness to resist the impact of floating objects and ice loads and to meet access and roadway requirements. The freeboard at the top of the dam will be determined by wave height and runup. In significant seismicity areas, additional concrete near the crest of the dam results in stress increases. To reduce these stress concentrations, the crest mass should be kept to a minimum and curved transitions provided at slope changes.

b. Overflow section. The overflow or spillway section should be designed in a similar manner as the nonoverflow section, complying with stability and stress criteria. The upstream face of the overflow section will have the same configuration as the nonoverflow section. The required downstream face slope is made tangent to the exponential curve of the crest and to the curve at the junction with the stilling basin or flip bucket. The methods used to determine the spillway crest curves is covered in EM 1110-2-1603, Hydraulic Design of Spillways. Piers may be included in the overflow section to support a bridge crossing the spillway and to support spillway gates. Regulating outlet conduits and gates are generally constructed in the overflow section.

4-4. Stability Considerations

a. General requirements. The basic stability requirements for a gravity dam for all conditions of loading are:

(1) That it be safe against overturning at any horizontal plane within the structure, at the base, or at a plane below the base.

(2) That it be safe against sliding on any horizontal or near-horizontal plane within the structure at the base or on any rock seam in the foundation.

(3) That the allowable unit stresses in the concrete or in the foundation material shall not be exceeded.

Characteristic locations within the dam in which a stability criteria check should be considered include planes where there are dam section changes and high concentrated loads. Large galleries and openings within the structure and upstream and downstream slope transitions are specific areas for consideration.

b. Stability criteria. The stability criteria for concrete gravity dams for each load condition are listed in Table 4-1. The stability analysis should be presented in the design memoranda in a form similar to that shown on Figure 4-1. The seismic coefficient method of analysis, as outlined in Chapter 3, should be used to determine resultant location and sliding stability for the earthquake load conditions. The seismic coefficient used in the analysis should be no less than that given in ER 1110-2-1806, Earthquake Design and Analysis for Corps of Engineers Projects. Stress analyses for a maximum credible earthquake event are covered in Chapter 5. Any deviation from the criteria in Table 4-1 shall be accomplished only with the approval of CECW-ED, and should be justified by comprehensive foundation studies of such nature as to reduce uncertainties to a minimum.

4-5. Overturning Stability

a. Resultant location. The overturning stability is calculated by applying all the vertical forces (ΣV) and lateral forces for each loading condition to the dam and, then, summing moments (ΣM) caused by the consequent forces about the downstream toe. The resultant location along the base is:

1-6

Table 4-1
Stability and stress criteria

Load Condition	Resultant Location at Base	Minimum Sliding FS	Foundation Bearing Pressure	Concrete Stress	
				Compressive	Tensile
Usual	Middle 1/3	2.0	≤ allowable	0.3 f'_c	0
Unusual	Middle 1/2	1.7	≤ allowable	0.5 f'_c	0.6 $f'^{2/3}_c$
Extreme	Within base	1.3	≤ 1.33 × allowable	0.9 f'_c	1.5 $f'^{2/3}_c$

Note: f'_c is 1-year unconfined compressive strength of concrete. The sliding factors of safety (*FS*) are based on a comprehensive field investigation and testing program. Concrete allowable stresses are for static loading conditions.

$$\textit{Resultant location} = \frac{\Sigma M}{\Sigma V} \tag{4-1}$$

$$FS = \frac{\tau_F}{\tau} = \frac{(\sigma \tan \phi + c)}{\tau} \tag{4-2}$$

The methods for determining the lateral, vertical, and uplift forces are described in Chapter 3.

b. Criteria. When the resultant of all forces acting above any horizontal plane through a dam intersects that plane outside the middle third, a noncompression zone will result. The relationship between the base area in compression and the location of the resultant is shown in Figure 4-2. For usual loading conditions, it is generally required that the resultant along the plane of study remain within the middle third to maintain compressive stresses in the concrete. For unusual loading conditions, the resultant must remain within the middle half of the base. For the extreme load conditions, the resultant must remain sufficiently within the base to assure that base pressures are within prescribed limits.

4-6. Sliding Stability

a. General. The sliding stability is based on a factor of safety (*FS*) as a measure of determining the resistance of the structure against sliding. The multiple-wedge analysis is used for analyzing sliding along the base and within the foundation. For sliding of any surface within the structure and single planes of the base, the analysis will follow the single plane failure surface of analysis covered in paragraph 4-6*e*.

b. Definition of sliding factor of safety.

(1) The sliding *FS* is conceptually related to failure, the ratio of the shear strength (τ_F), and the applied shear stress (τ) along the failure planes of a test specimen according to Equation 4-2:

where $\tau_F = \sigma \tan \phi + c$, according to the Mohr-Coulomb Failure Criterion (Figure 4-3). The sliding *FS* is applied to the material strength parameters in a manner that places the forces acting on the structure and rock wedges in sliding equilibrium.

(2) The sliding *FS* is defined as the ratio of the maximum resisting shear (T_F) and the applied shear (T) along the slip plane at service conditions:

$$FS = \frac{T_F}{T} = \frac{(N \tan \phi + cL)}{T} \tag{4-3}$$

where

N = resultant of forces normal to the assumed sliding plane

ϕ = angle of internal friction

c = cohesion intercept

L = length of base in compression for a unit strip of dam

c. Basic concepts, assumptions, and simplifications.

(1) Limit equilibrium. Sliding stability is based on a limit equilibrium method. By this method, the shear force necessary to develop sliding equilibrium is determined for an assumed failure surface. A sliding mode of failure will occur along the presumed failure surface when the applied shear (T) exceeds the resisting shear (T_F).

1-7

ALLENDALE POND

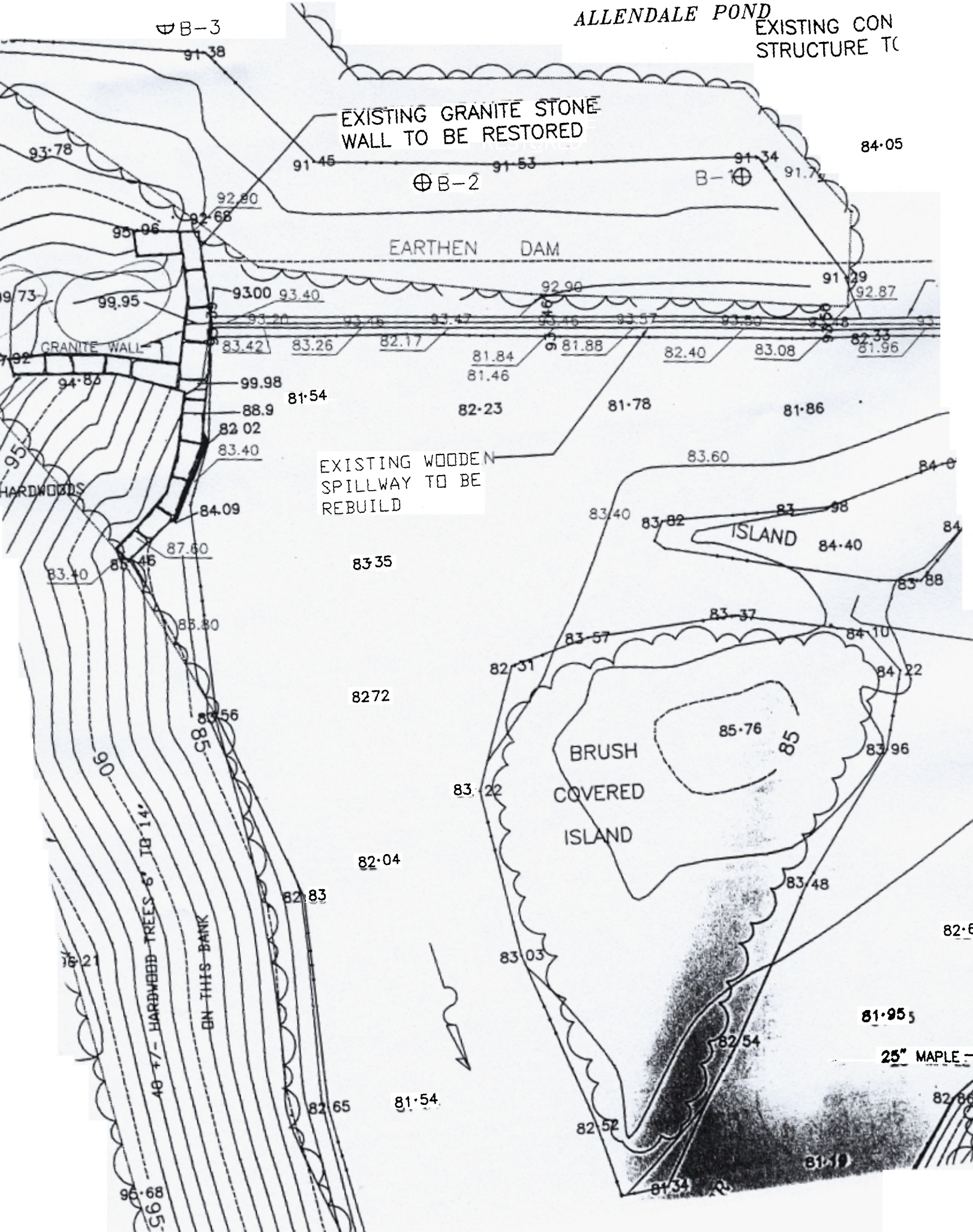

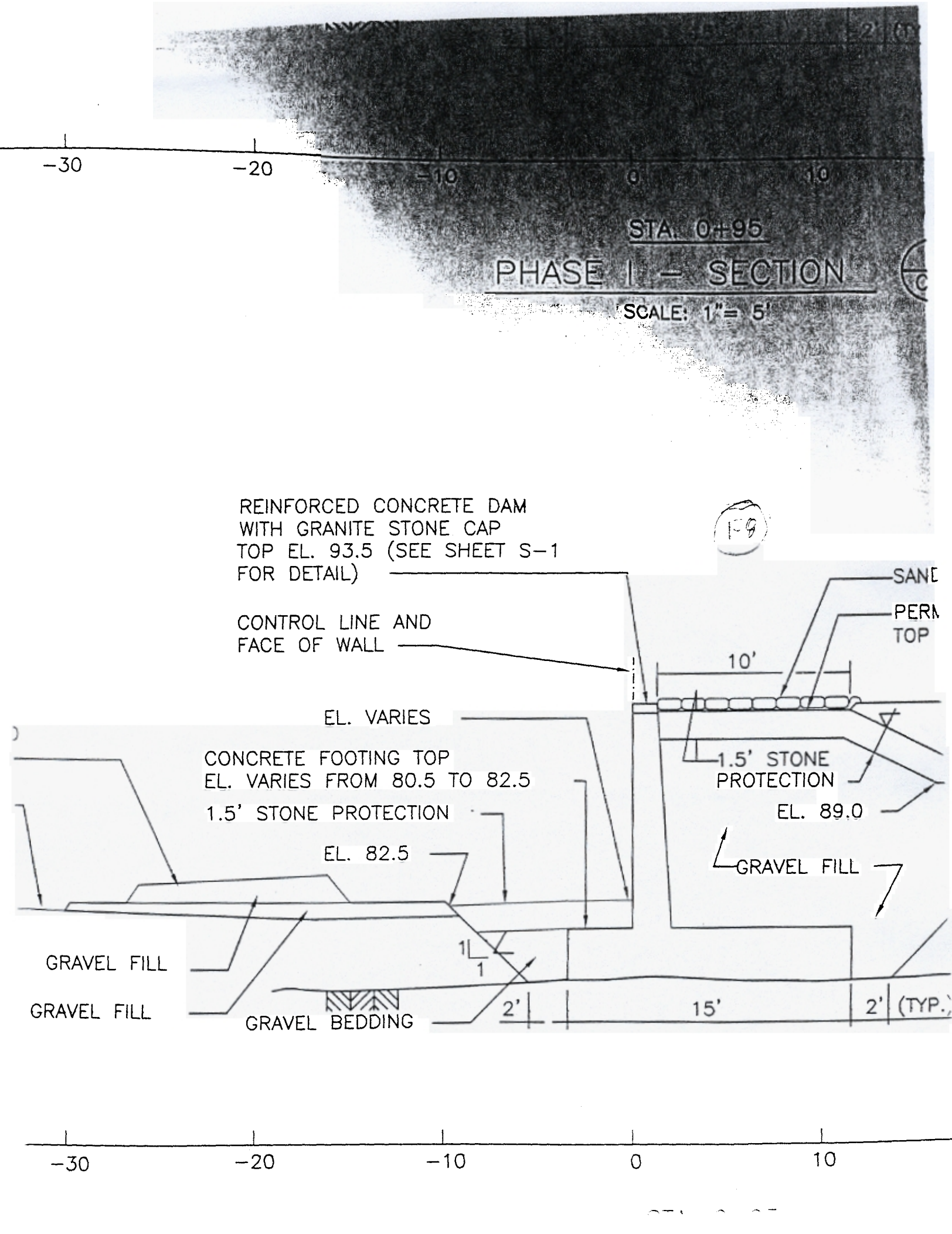
STA. 0+95
PHASE I – SECTION
SCALE: 1"= 5'
REINFORCED CONCRETE DAM WITH GRANITE STONE CAP TOP EL. 93.5 (SEE SHEET S-1 FOR DETAIL)
CONTROL LINE AND FACE OF WALL
EL. VARIES
CONCRETE FOOTING TOP EL. VARIES FROM 80.5 TO 82.5
1.5' STONE PROTECTION
EL. 82.5
GRAVEL FILL
GRAVEL FILL
GRAVEL BEDDING
1
1
2'
15'
2'
(TYP.)
10'
1.5' STONE PROTECTION
EL. 89.0
GRAVEL FILL
-30
-20
-10
0
10

SCALE: 1"= 5'

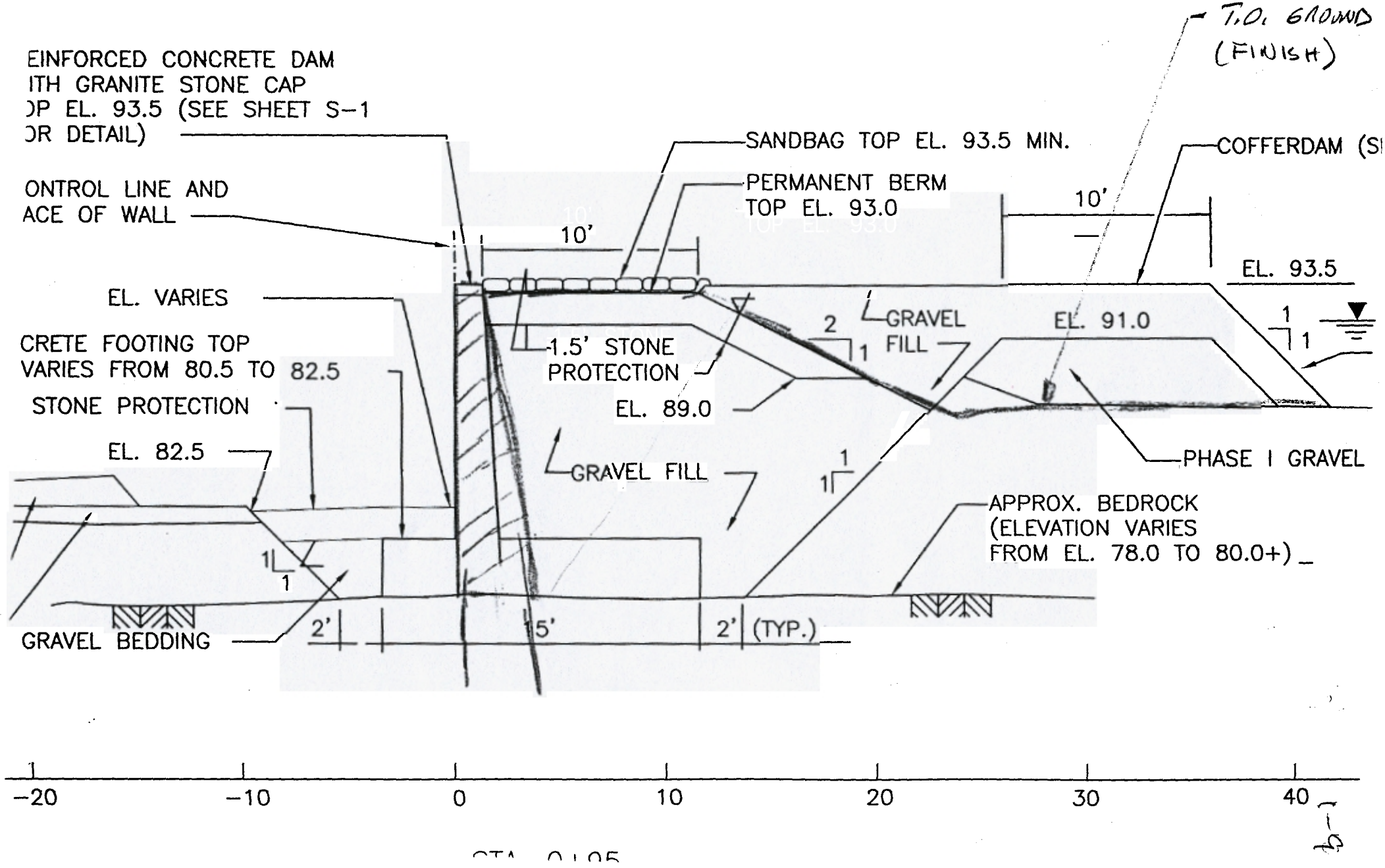
T.O. GROUND
(FINISH)
EINFORCED CONCRETE DAM
ITH GRANITE STONE CAP
OP EL. 93.5 (SEE SHEET S-1
OR DETAIL)
SANDBAG TOP EL. 93.5 MIN.
COFFERDAM (S
ONTROL LINE AND
ACE OF WALL
PERMANENT BERM
TOP EL. 93.0
10'
10'
EL. 93.5
EL. VARIES
GRAVEL
FILL
EL. 91.0
CRETE FOOTING TOP
VARIES FROM 80.5 TO 82.5
1.5' STONE
PROTECTION
STONE PROTECTION
EL. 89.0
EL. 82.5
GRAVEL FILL
PHASE I GRAVEL
APPROX. BEDROCK
(ELEVATION VARIES
FROM EL. 78.0 TO 80.0+)
GRAVEL BEDDING
2'
15'
2' (TYP.)
-20
-10
0
10
20
30
40

Φ GEI Consultants, Inc.

Client: LEA
Project: Allendale Dam
Subject: Stability

Project No.: 01179
~~Date:~~ 6/01 By: MPW
Chkd: 6/28/01 By: MMC

Stability Analysis for Load Case 1 - Normal Pool

See attached Freebody Diagram Pg 1-11

Headwater Elevation = $El_{hw} := 93.5 \cdot ft$ (upstream)

Tailwater Elevation : $El_{tail} := 82.0 \cdot ft$ (downstream)

See attached free body diagram

$\gamma_c = 150.0 pcf$ $\gamma_w = 62.4 pcf$ $\gamma_t = 125.0 pcf$ $K_a = 0.32$

Compute Soil and Water Pressures

Depth of Tailwater $hw_{tail} := (El_{tail} - El_{ftoe})$ $hw_{tail} = 4.0 ft$

Depth of Headwater = $hw_{head} := (El_{hw} - El_{ftoe})$ $hw_{head} = 15.5 ft$

Depth of Soil = $h_s := 15.5 \cdot ft$

$p_{w1} := \gamma_w \cdot hw_{tail}$ $p_{w1} = 249.6 psf$

$p_{w2} := \gamma_w \cdot hw_{head}$ $p_{w2} = 967.2 psf$

$p_s := K_a \cdot (\gamma_t - \gamma_w) \cdot h_s$ $p_s = 312.5 psf$

Compute Resultant Forces

Wall Geometry Toe Width = $w_{bot} = 2.5 ft$ Top Width = $w_{top} = 2.0 ft$ Height = $h_{wall} = 13.0 ft$

$R_{w1} := \frac{1}{2} \cdot hw_{tail} \cdot p_{w1}$ $R_{w1} = 499.2 plf$

$R_{w2} := \frac{1}{2} \cdot hw_{head} \cdot p_{w2}$ $R_{w2} = 7495.8 plf$

$R_s := \frac{1}{2} \cdot h_s \cdot p_s$ $R_s = 2421.7 plf$

$R_{u1} := p_{w1} \cdot w_f$ $R_{u1} = 1872.0 plf$

$R_{u2} := \frac{1}{2} \cdot w_f \cdot (p_{w2} - p_{w1})$ $R_{u2} = 2691.0 plf$

The uplift pressure is calculated along the entire width of the footing. However both the upstream and downstrear projection of the footing have water or bouyant soil forces plus water above them. Include these forces in weights

$W_1 := \gamma_c \cdot h_{wall} \cdot w_{top}$ $W_1 = 3900.0 plf$

$W_2 := \frac{1}{2} \cdot \gamma_c \cdot h_{wall} \cdot (w_{bot} - w_{top})$ $W_2 = 487.5 plf$

$W_3 := \gamma_c \cdot h_f \cdot w_f$

$W_{tail} := \gamma_w \cdot (El_{tail} - El_{ftop}) \cdot proj_{up}$ $W_{tail} = 234.0 plf$

GEI Consultants, Inc.

		Project	01179	Page	1-11
Client	LEA	Date	06/01	By	MPW
Subject	ALLENDALE DAM	Checked	7/2/01	By	MMC
		Approved		By	

NORMAL POOL GEOMETRY

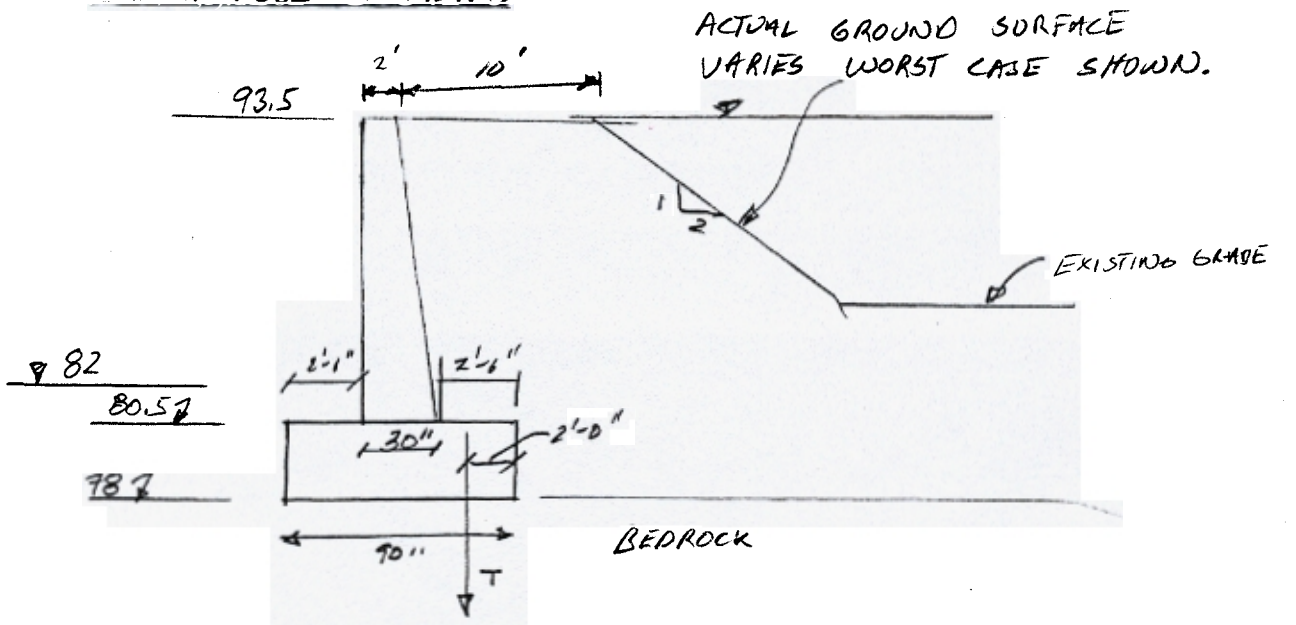

FREE BODY DIAGRAM

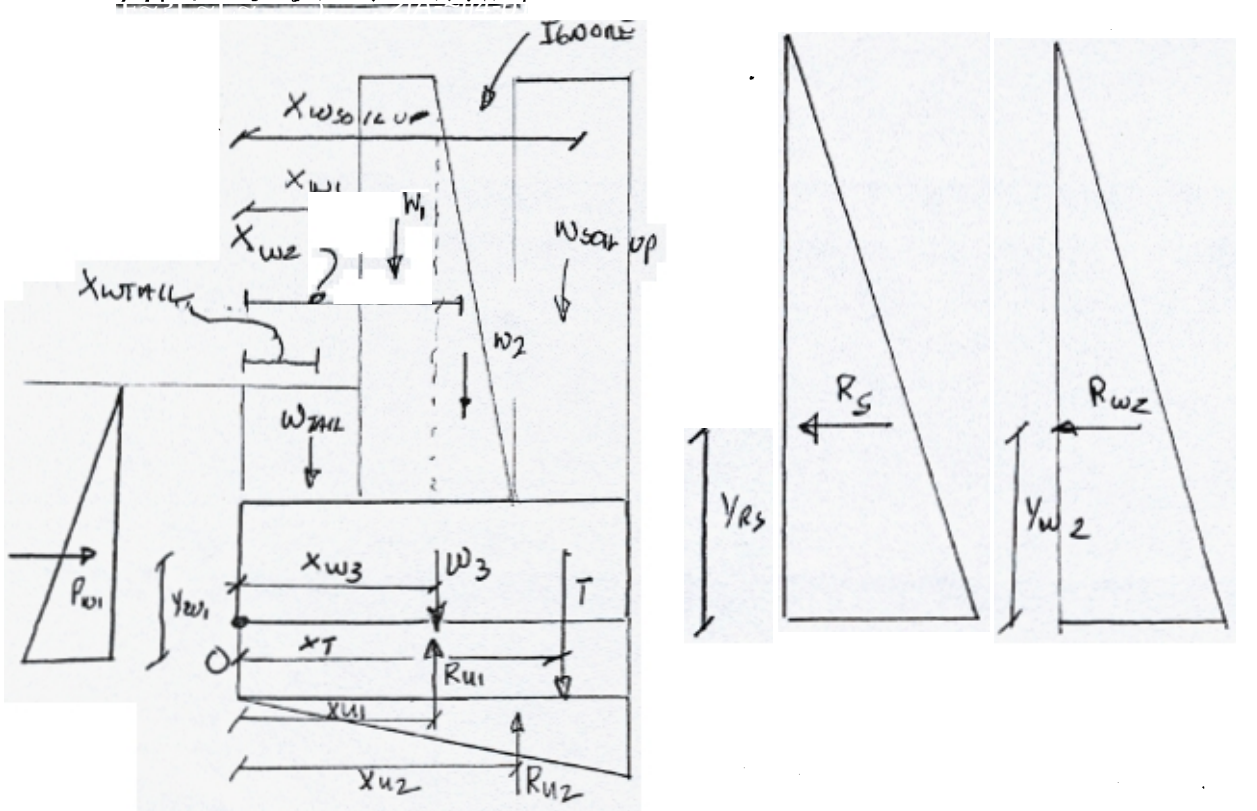

$W_{soilup} := (h_s - h_f) \cdot \gamma_t \cdot 1 \cdot ft$ $\quad W_{soilup} = 1625.0\,plf$

Compute Moment Arm about Point O

$y_{w1} := \frac{1}{3} \cdot hw_{tail}$ $\quad y_{w1} = 1.3\,ft$

$y_{w2} := \frac{1}{3} \cdot hw_{head}$ $\quad y_{w2} = 5.2\,ft$

$y_s := \frac{1}{3} \cdot h_s$ $\quad y_s = 5.2\,ft$

$x_{u1} := \frac{1}{2} \cdot w_f$ $\quad x_{u1} = 3.7\,ft$

$x_{u2} := \frac{2}{3} \cdot w_f$ $\quad x_{u2} = 5.0\,ft$

$x_{W1} := \frac{1}{2} \cdot w_{top} + proj_{down}$ $\quad x_{W1} = 3.5\,ft$

$x_{W2} := w_{top} + \frac{1}{3} \cdot (w_{bot} - w_{top}) + proj_{down}$ $\quad x_{W2} = 4.7\,ft$

$x_{W3} := \frac{w_f}{2}$ $\quad x_{W3} = 3.7\,ft$

$x_{Wtail} := \frac{proj_{up}}{2}$ $\quad x_{Wtail} = 1.3\,ft$

$x_{Wsoilup} := w_f - \frac{proj_{down}}{2}$ $\quad x_{Wsoilup} = 6.2\,ft$

By inspection rock anchors will be required to provide an adequate factor of safety against sliding, and to meet requirements for bearing pressure and location of the resultant within the base of the wall.

For this load case, from EM1110-2-2200, for overturning the resultant force should be in the middle third of the foundation.

or the eccentricity from the centerline is $\frac{w_f}{6} = 1.2\,ft$

Compute Tension Force (T) Using Force and Moment Equilibrium

Set the rock anchor two feet downstream of the upstream edge of the footing.

Moment Arm for T $= x_T := w_f - 2 \cdot ft$ $\quad x_T = 5.5\,ft$

Assumer $\quad T := 15.5 \cdot klf$

Sum of Mo $\quad M_o := R_{u1} \cdot x_{u1} + R_{u2} \cdot x_{u2} + R_s \cdot y_s + R_{w2} \cdot y_{w2}$ $\quad M_o = 71715.3\,lb$

Sum of Mr $\quad M_r := W_1 \cdot x_{W1} + W_2 \cdot x_{W2} + W_3 \cdot x_{W3} + W_{tail} \cdot x_{Wtail} + W_{soilup} \cdot x_{Wsoilup} + R_{w1} \cdot y_{w1} + T \cdot x_T$

$M_r = 122836.2\,lb$

Φ GEI Consultants, Inc.

Client: LEA
Project: Allendale Dam
Subject: Stability

Project No.: 01179
Date: 6/01 By: MPW
Chkd: 6/28/01 By: MMC

$R := W_1 + W_2 + W_3 + W_{tail} + W_{soilup} + T - R_{u1} - R_{u2}$

the eccentricity from O $e_o := \left|\frac{M_r - M_o}{R}\right|$ $e_o = 2.6\,ft$ (SEE PG 1-14

the eccentricity from the cl $e_r := \left|\left(\frac{w_f}{2} - e_o\right)\right|$ $e_r = 1.2\,ft$ less than or equal to $\frac{w_f}{6} = 1.2\,ft$

$T_{01} := T$

okay

Check the Bearing Capactiy at the Downstream Face

$\sigma_B := 2\cdot\frac{R}{w_f}$ $\sigma_B = 2.7\,tsf$ $\sigma_B = 37.0\,psi$

From EM-1110-2-2200 $\sigma_{all} := 0.3\cdot 4000\cdot psi$ $\sigma_{all} = 1200.0\,psi$

Concrete is okay

Check the Factor of Safety Against Sliding

Compute Friction Force, F_F without considering tension force

$F_F := \mu\cdot(W_1 + W_2 + W_3 + W_{tail} + W_{soilup} - R_{u1} - R_{u2}) + c\cdot w_f$ $F_F = 13395.8\,plf$

Sum of Resisting Forces $= P_R := F_F + R_{w1}$ $P_R = 13895.0\,plf$

Sum of Driving Forces = $P_D := R_s + R_{w2}$ $P_D = 9917.5\,plf$

Factor of Safety Against Sliding $= FS := \frac{P_R}{P_D}$ $FS = 1.40$ < 2.0 from EM-2-2200

Compute Force Required for Tenison Anchor to Increase FS to acceptable FS = 2.0

$T := 9.5\cdot klf$

where $F_F := \mu\cdot T + F_F$ $P_R := F_F + R_{w1}$

$\frac{P_R}{P_D} = 2.0$

$T_{s1} := T$ $T_{s1} = 9.5\,klf$ T for sliding

$T_{01} = 15.5\,klf$ T for overturnning CONTROLS

GEI Consultants, Inc.

		Project 01179	Page 1-14
Client LEN		Date 6/20/01	By KJD
Subject Allendale Dam Reconstruction		Checked 6/01	By MPW
		Approved	By

Freebody Diagram for $e = B/6$

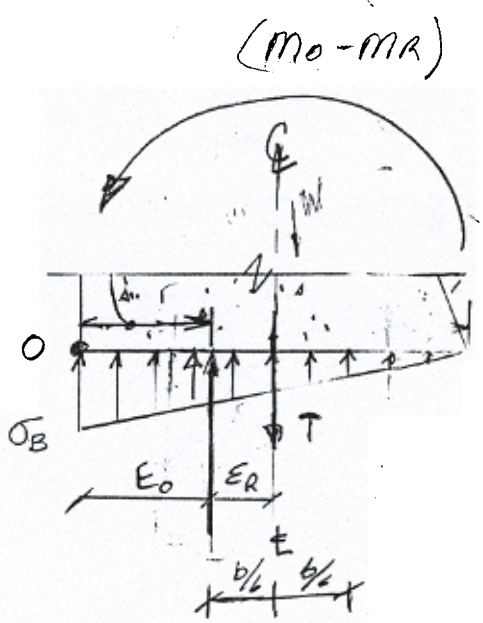

Φ GEI Consultants, Inc.

Project No.: 01179
~~Date:~~ 6/01 By: MPW
Chkd: 7/2/01 By: MMC

Client: LEA
Project: Allendale Dam
Subject: Stability

Stability Analysis for Load Case 2 - 100 yr Flood

See attached Freebody Diagram Page 1-16

Headwater Elevation = $El_{hw} := 97.1 \cdot ft$ (upstream)

Tailwater Elevation : $El_{tail} := 88.9 \cdot ft$ (downstream)

See attached free body diagram

$\gamma_c = 150.0\,pcf$ $\gamma_w = 62.4\,pcf$ $\gamma_t = 125.0\,pcf$ $K_a = 0.32$

Compute Soil and Water Pressures

Depth of Tailwater $hw_{tail} := (El_{tail} - El_{ftoe})$ $hw_{tail} = 10.9\,ft$

Depth of Headwater = $hw_{head} := (El_{hw} - El_{ftoe})$ $hw_{head} = 19.1\,ft$

Depth of Soil = $h_s := 15.5 \cdot ft$

$p_{w1} := \gamma_w \cdot hw_{tail}$ $p_{w1} = 680.2\,psf$

$p_{w2} := \gamma_w \cdot hw_{head}$ $p_{w2} = 1191.8\,psf$

$p_s := K_a \cdot (\gamma_t - \gamma_w) \cdot h_s$ $p_s = 312.5\,psf$

Compute Resultant Forces

Wall Geometry Toe Width = $w_{bot} = 2.5\,ft$ Top Width = $w_{top} = 2.0\,ft$ Height = $h_{wall} = 13.0\,ft$

$R_{w1} := \frac{1}{2} \cdot hw_{tail} \cdot p_{w1}$ $R_{w1} = 3706.9\,plf$

$R_{w2} := \frac{1}{2} \cdot hw_{head} \cdot p_{w2}$ $R_{w2} = 11382.1\,plf$

$R_s := \frac{1}{2} \cdot h_s \cdot p_s$ $R_s = 2421.7\,plf$

$R_{u1} := p_{w1} \cdot w_f$ $R_{u1} = 5101.2\,plf$

$R_{u2} := \frac{1}{2} \cdot w_f \cdot (p_{w2} - p_{w1})$ $R_{u2} = 1918.8\,plf$

The uplift pressure is calculated along the entire width of the footing. However both the upstream and downstrear projection of the footing have water or bouyant soil forces plus water above them. Include these forces in weights

$W_1 := \gamma_c \cdot h_{wall} \cdot w_{top}$ $W_1 = 3900.0\,plf$

$W_2 := \frac{1}{2} \cdot \gamma_c \cdot h_{wall} \cdot (w_{bot} - w_{top})$ $W_2 = 487.5\,plf$

$W_3 := \gamma_c \cdot h_f \cdot w_f$

$W_{tail} := \gamma_w \cdot (El_{tail} - El_{ftop}) \cdot proj_{up}$ $W_{tail} = 1310.4\,plf$

GEI Consultants, Inc.

	Project 01179	Page 1-16	
Client LEA	Date 6/28/01	By MMC	
Subject Allendale Dam Stability	Checked 6/01	By MPW	
	Approved	By	

100 YEAR FLOOD GEOMETRY

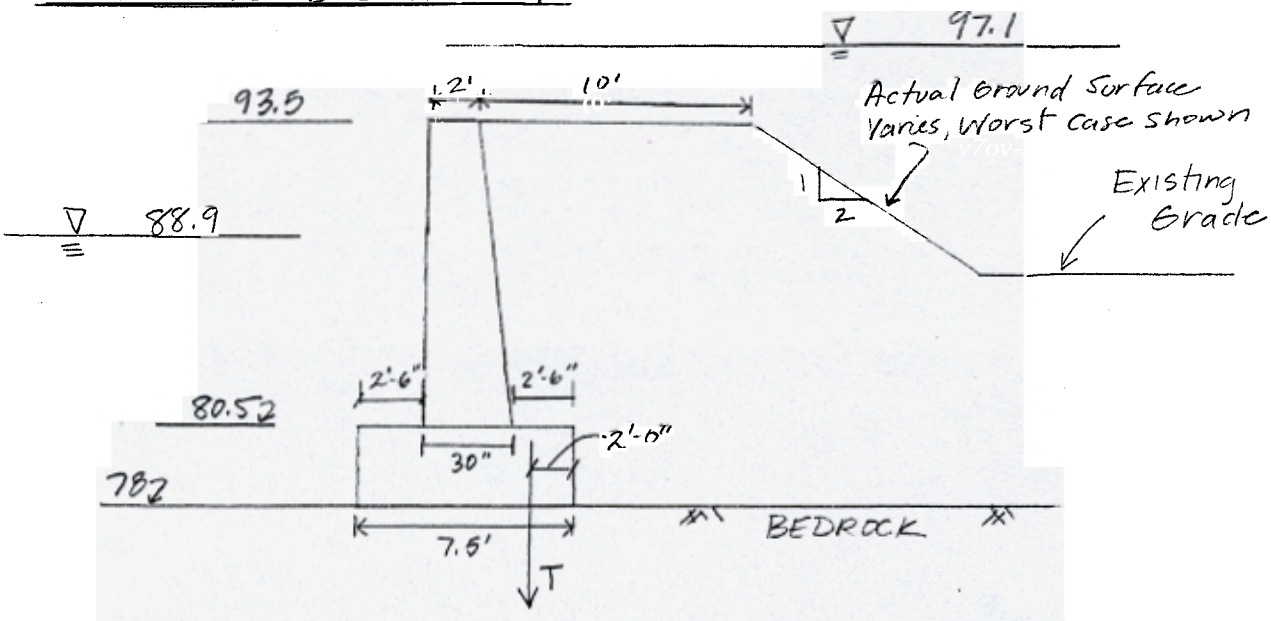

FREE BODY DIAGRAM

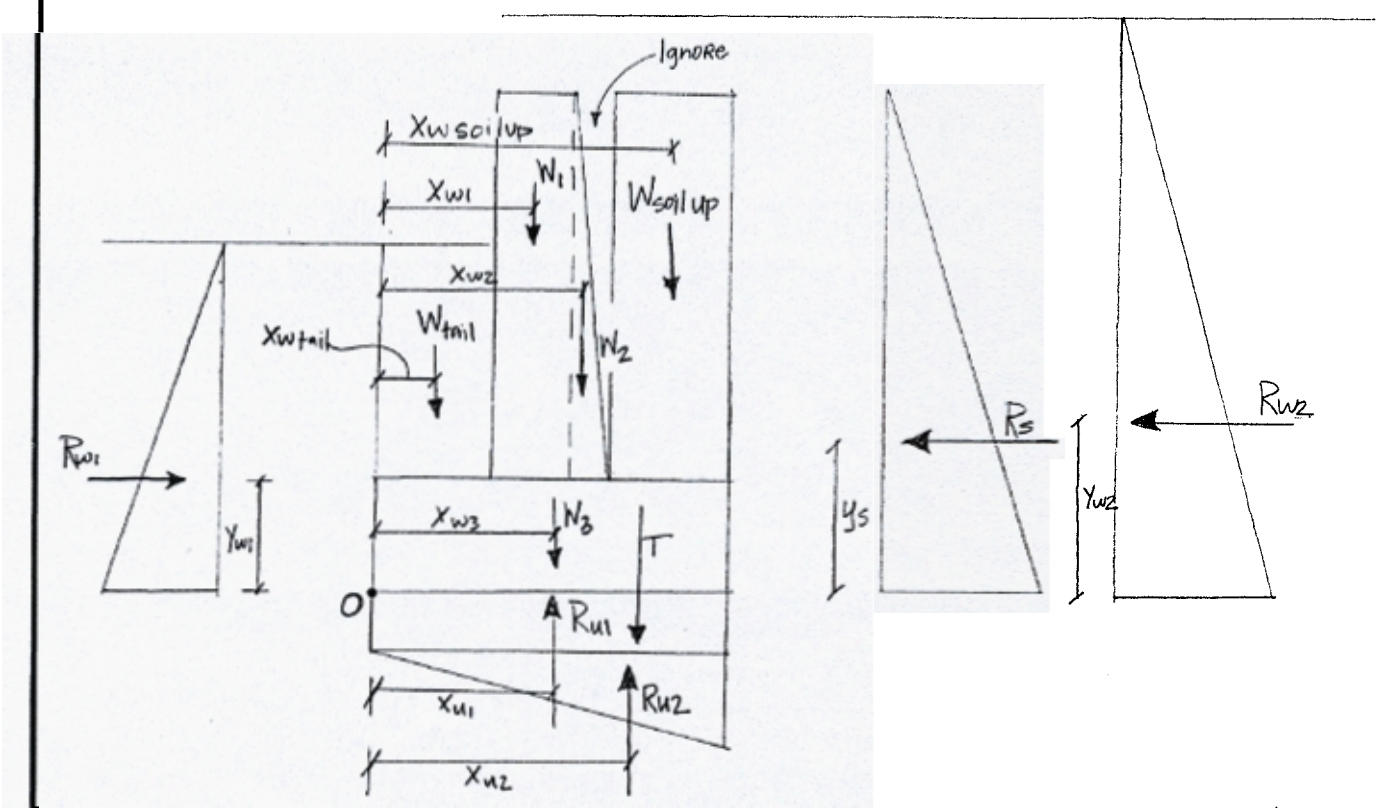

Φ GEI Consultants, Inc.

Client: LEA
Project: Allendale Dam
Subject: Stability

Project No.: 01179
Date: 6/01 By: [illegible]
Chkd: 7/2/01 By: MMC

$W_{soilup} := (h_s - h_f) \cdot \gamma_t \cdot 1 \cdot ft$ $\quad W_{soilup} = 1625.0\,plf$

Compute Moment Arm about Point O

$y_{w1} := \frac{1}{3} \cdot hw_{tail}$ $\quad y_{w1} = 3.6\,ft$

$y_{w2} := \frac{1}{3} \cdot hw_{head}$ $\quad y_{w2} = 6.4\,ft$

$y_s := \frac{1}{3} \cdot h_s$ $\quad y_s = 5.2\,ft$

$x_{u1} := \frac{1}{2} \cdot w_f$ $\quad x_{u1} = 3.7\,ft$

$x_{u2} := \frac{2}{3} \cdot w_f$ $\quad x_{u2} = 5.0\,ft$

$x_{W1} := \frac{1}{2} \cdot w_{top} + proj_{down}$ $\quad x_{W1} = 3.5\,ft$

$x_{W2} := w_{top} + \frac{1}{3} \cdot (w_{bot} - w_{top}) + proj_{down}$ $\quad x_{W2} = 4.7\,ft$

$x_{W3} := \frac{w_f}{2}$ $\quad x_{W3} = 3.7\,ft$

$x_{Wtail} := \frac{proj_{up}}{2}$ $\quad x_{Wtail} = 1.3\,ft$

$x_{Wsoilup} := w_f - \frac{proj_{down}}{2}$ $\quad x_{Wsoilup} = 6.2\,ft$

By inspection rock anchors will be required to provide an adequate factor of safety against sliding, and to meet requirements for bearing pressure and location of the resultant within the base of the wall.

For this load case, from EM1110-2-2200, for overturning the resultant force should be in the middle half of the foundation.

or the eccentricity from the centerline is $\frac{w_f}{4} = 1.9\,ft$

Compute Tension Force (T) Using Force and Moment Equilibrium

Set the rock anchor two feet downstream of the upstream edge of the footing.

Moment Arm for T = $x_T := w_f - 2 \cdot ft$ $\quad x_T = 5.5\,ft$

Assumer $\quad T := 18.5 \cdot klf$

Sum of Mo $\quad M_o := R_{u1} \cdot x_{u1} + R_{u2} \cdot x_{u2} + R_s \cdot y_s + R_{w2} \cdot y_{w2}$ $\quad M_o = 113701.4\,lb$

Sum of Mr $\quad M_r := W_1 \cdot x_{W1} + W_2 \cdot x_{W2} + W_3 \cdot x_{W3} + W_{tail} \cdot x_{Wtail} + W_{soilup} \cdot x_{Wsoilup} + R_{w1} \cdot y_{w1} + T \cdot x_T$

$M_r = 153484.4\,lb$

Φ GEI Consultants, Inc.

Client: LEA
Project: Allendale Dam
Subject: Stability

Project No.: 01179
Date: 6/01 By: MDW
Chkd: 7/2/01 By: MMC

$R := W_1 + W_2 + W_3 + W_{tail} + W_{soilup} + T - R_{u1} - R_{u2}$

the eccentricity from O $e_o := \left|\frac{M_r - M_o}{R}\right|$ $e_o = 1.8\,ft$

the eccentricity from the cl $e_r := \left|\left(\frac{w_f}{2} - e_o\right)\right|$ $e_r = 1.9\,ft$ less than or equal to $\frac{w_f}{4} = 1.9\,ft$

$T_{01} := T$

okay

Check the Bearing Capactiy at the Downstream Face

$\sigma_B := \frac{4 \cdot R}{3 \cdot (w_f - 2 \cdot e_r)}$ page 1-18A $\sigma_B = 3.9\,tsf$ $\sigma_B = 54.4\,psi$

From EM-1110-2-2200 $\sigma_{all} := 0.3 \cdot 4000 \cdot psi$ $\sigma_{all} = 1200.0\,psi$

Concrete is okay

Check the Factor of Safety Against Sliding

Compute Friction Force, F_F without considering tension force

$F_F := \mu \cdot (W_1 + W_2 + W_3 + W_{tail} + W_{soilup} - R_{u1} - R_{u2}) + c \cdot w_f$ $F_F = 12598.7\,plf$

Sum of Resisting Forces $= P_R := F_F + R_{w1}$ $P_R = 16305.5\,plf$

Sum of Driving Forces = $P_D := R_s + R_{w2}$ $P_D = 13803.8\,plf$

Factor of Safety Against Sliding $= FS := \frac{P_R}{P_D}$ $FS = 1.18$ < 2.0 from EM-2-2200

Compute Force Required for Tenison Anchor to Increase FS to acceptable FS = 2.0

$T := 18.5 \cdot klf$

where $F_F := \mu \cdot T + F_F$ $P_R := F_F + R_{w1}$

$\frac{P_R}{P_D} = 2.0$

$T_{s1} := T$ $T_{s1} = 18.5\,klf$ T for sliding

$T_{01} = 18.5\,klf$ T for overturnning CONTROLS

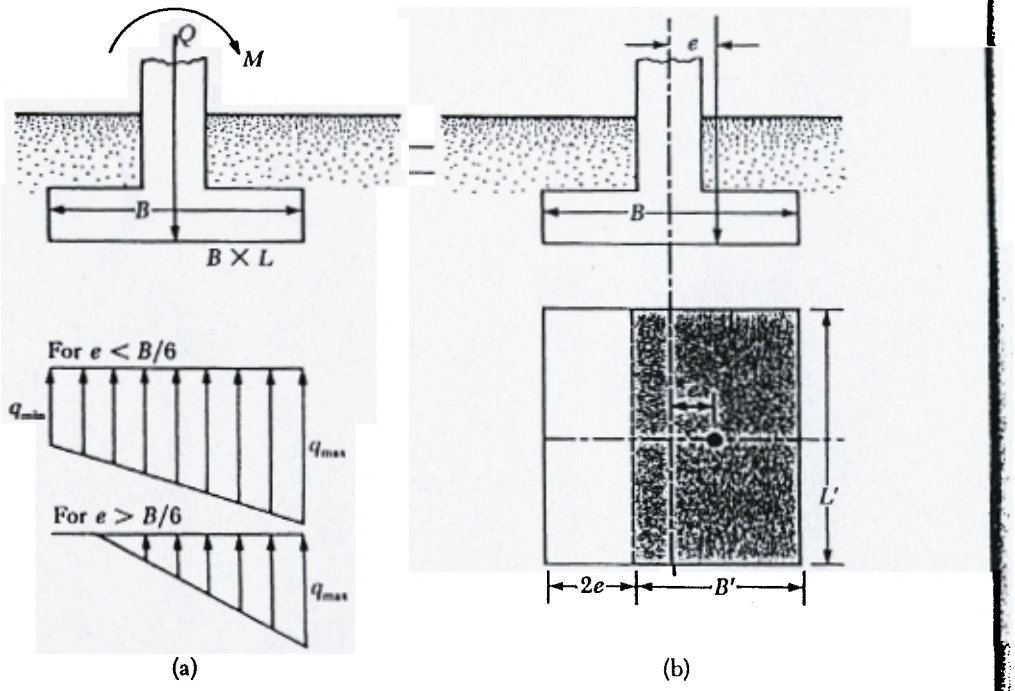

Figure 3.8 Eccentrically loaded foundations

The factor of safety of such types of loading against bearing capacity failure can be evaluated by using the procedure suggested by Meyerhof (1953), which is generally referred to as the *effective area* method. The following is Meyerhof's step-by-step procedure for determination of the ultimate load that the soil can support and the factor of safety against bearing capacity failure.

1. Figure 3.8b shows a force system equivalent to that shown in Figure 3.8a. The distance e is the eccentricity, or

$$e = \frac{M}{Q} \tag{3.47}$$

Substituting Eq. (3.47) in Eqs. (3.45) and (3.46) gives

$$q_{max} = \frac{Q}{BL}\left(1 + \frac{6e}{B}\right) \tag{3.48a}$$

and

$$q_{min} = \frac{Q}{BL}\left(1 - \frac{6e}{B}\right) \tag{3.48b}$$

Note that, in these equations, when the eccentricity, e, becomes equal to $B/6$, q_{min} is equal to zero. For $e > B/6$, q_{min} will be negative, which means that tension will develop. Because soil cannot take any tension, there will be a separation between the foundation and the soil underlying it. The nature of the

pressure distribution on the soil will be as shown in Figure 3.8 q_{max} can be given by the expression

$$q_{max} = \frac{4Q}{3L(B - 2e)}$$

2. Determine the effective dimensions of the foundation

B' = effective width = $B - 2e$

L' = effective length = L

Note that, if the eccentricity is in the direction of the length of the value of L' would be equal to $L - 2e$. The value of B' wo B. The smaller of the two dimensions (that is, L' and B') is the of the foundation.

3. Use Eq. (3.16) for the ultimate bearing capacity as

$$q'_u = cN_cF_{cs}F_{cd}F_{ci} + qN_qF_{qs}F_{qd}F_{qi} + \tfrac{1}{2}\gamma B'N_\gamma F_{\gamma s}F_{\gamma d}F_{\gamma i}$$

For the evaluation of F_{cs}, F_{qs}, $F_{\gamma s}$, F_{ci}, F_{qi}, and $F_{\gamma i}$, Equations (3.2 Eqs. (3.29) to (3.33) have to be used with *effective length* and dimensions in place of L and B, respectively.

For determination of F_{cd}, F_{qd}, and $F_{\gamma d}$, use Equations (3.23) t replace B with B').

4. The total ultimate load that the foundation can sustain

$$Q_{ult} = q'_u(B')(L')$$

5. The factor of safety against bearing capacity failure is g

$$FS = \frac{Q_{ult}}{Q}$$

As we can see, eccentricity tends to decrease the load-bea a foundation. In such cases, it is probably advantageous to place columns off center, as shown in Figure 3.9. This, in effect, prod loaded foundation with uniformly distributed pressure.

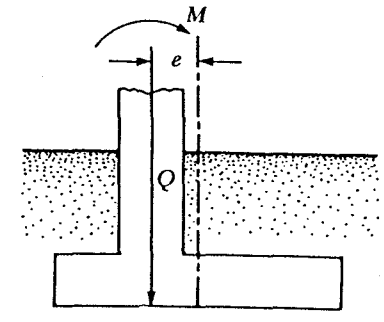

Figure 3.9 Foundation of columns with off-center loading

1-18A

Stability Analysis for Load Case 3 - Normal Pool + EQ

Use values from Case 1 with dynamic forces added.

$R_{u1} = 1.9\,klf$ $x_{u1} = 3.7\,ft$ $R_{w1} = 0.5\,klf$ $y_{w1} = 1.3\,ft$ $W_2 = 0.5\,klf$ $x_{W2} = 4.7\,ft$

$R_{u2} = 2.7\,klf$ $x_{u2} = 5.0\,ft$ $R_{w2} = 7.5\,klf$ $y_{w2} = 5.2\,ft$ $W_3 = 2.8\,klf$ $x_{W3} = 3.7\,ft$

$R_s = 2.4\,klf$ $y_s = 5.2\,ft$ $W_1 = 3.9\,klf$ $x_{W1} = 3.5\,ft$

$W_{tail} = 0.2\,klf$ $x_{Wtail} = 1.3\,ft$ $W_{soilup} = 1.6\,klf$ $x_{Wsoilup} = 6.2\,ft$

Dynamic Forces

Use acceleration coefficients form Algermissen

$\alpha_a := 0.34\ g$ $k_h := \alpha_a$ $k_v := \frac{2}{3}\cdot k_h$

Soil Pressures

See attached formula from the COE guidelines for design of retaining strucutres pages _____

$\phi := 30\cdot deg$ $\theta = 2.2\,deg$ $\beta := 0\,deg$ $\psi := atan\left(\frac{k_h}{1-k_v}\right)$ $\psi = 23.7\,deg$ $\delta = 0.0$

$$K_{ae} := \frac{\cos(\phi-\psi-\theta)^2}{\cos(\psi)\cdot\cos(\theta)^2\cdot\cos(\psi+\theta+\delta)\cdot\left(1+\sqrt{\frac{\sin(\phi+\delta)\cdot\sin(\phi-\psi-\beta)}{\cos(\beta-\theta)\cdot\cos(\psi+\theta+\delta)}}\right)^2} \qquad K_{ae} = 0.8$$

for soils the dynamic loads are

$P_{ea} := K_{ae}\cdot\frac{h_s^2}{2}\cdot(\gamma_t-\gamma_w)$ $P_{ea} = 5.9\,klf$

$P_{es} := P_{ea} - R_s$ $M_{es} := \frac{2}{3}\cdot P_{es}\cdot h_s$ $P_{es} = 3.4\,klf$ $M_{es} = 35.5\,kip\cdot\frac{ft}{ft}$

Use westergards formula for dynamic water forces see attached pages _____

$C_e := 0.051\frac{kip}{ft^3}$

$P_{ew} := \frac{2}{3}\cdot C_e\cdot k_h\cdot hw_{head}^2$ $P_{ew} = 2.8\,klf$

$M_{ew} := 0.4hw_{head}\cdot P_{ew}$ $M_{ew} = 17.2\,ft\,klf$

DEPARTMENT OF THE INTERIOR
U.S. GEOLOGICAL SURVEY

1-20

PROBABILISTIC EARTHQUAKE ACCELERATION AND VELOCITY MAPS FOR THE UNITED STATES AND PUERTO RICO

By S.T. Algermissen, D.M. Perkins, P.C. Thenhaus, S.L. Hanson, and B.L. Bender

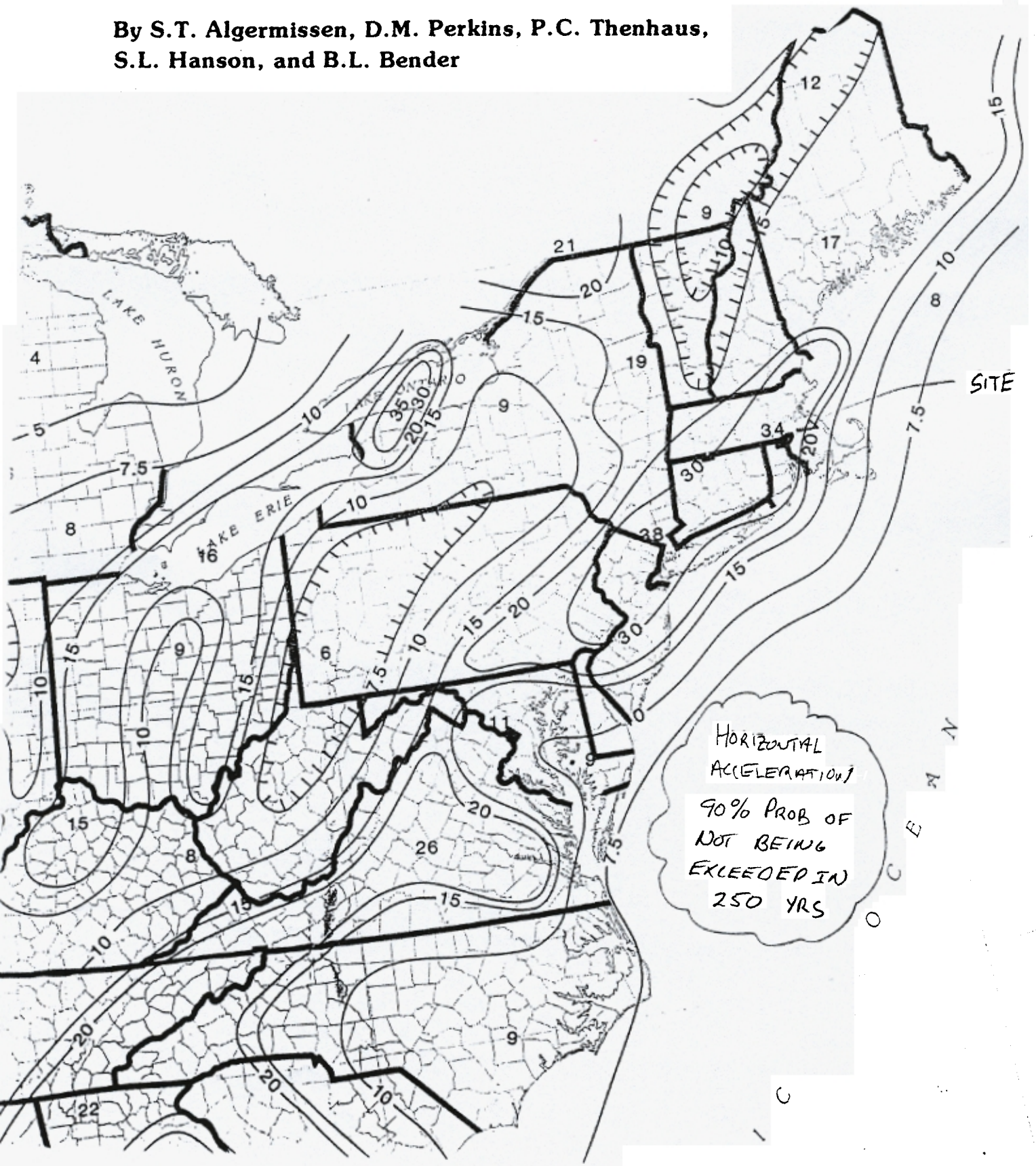

For driving (active) wedges (Figure 3-34a),

$$P_{AE} = \frac{1}{2} K_{AE}\gamma(1 - k_v)h^2 \qquad [3\text{-}44]$$

$$K_{AE} = \frac{\cos^2 (\phi - \Psi - \theta)}{\cos \Psi \cos^2 \theta \cos (\Psi + \theta + \delta)\left[1 + \sqrt{\frac{\sin (\phi + \delta) \sin (\phi - \Psi - \beta)}{\cos (\beta - \theta) \cos (\Psi + \theta + \delta)}}\right]^2} \qquad [3\text{-}45]$$

For resisting (passive) wedges (Figure 3-34b),

$$P_{PE} = \frac{1}{2} K_{PE}\gamma(1 - k_v)h^2 \qquad [3\text{-}46]$$

$$K_{PE} = \frac{\cos^2 (\phi - \Psi + \theta)}{\cos \Psi \cos^2 \theta \cos (\Psi - \theta + \delta)\left[1 - \sqrt{\frac{\sin (\phi + \delta) \sin (\phi - \Psi + \beta)}{\cos (\beta - \theta) \cos (\Psi - \theta + \delta)}}\right]^2} \qquad [3\text{-}47]$$

P_{AE} and P_{PE} are the combined static and dynamic forces due to the driving and resisting wedges, respectively. The equations are subject to the same limitations that are applicable to Coulomb's equations. Definitions of terms are as follows:

γ = unit weight of soil

k_v = vertical acceleration in g's

h = height of wall

ϕ = internal friction angle of soil

$\Psi = \tan^{-1}\left(\frac{k_h}{1 - k_v}\right)$ = seismic inertia angle

k_h = horizontal acceleration in g's

θ = inclination of wall with respect to vertical (this definition of θ is different from θ in Coulomb's equations)

δ = wall friction angle

β = inclination of soil surface (upward slopes away from the wall are positive)

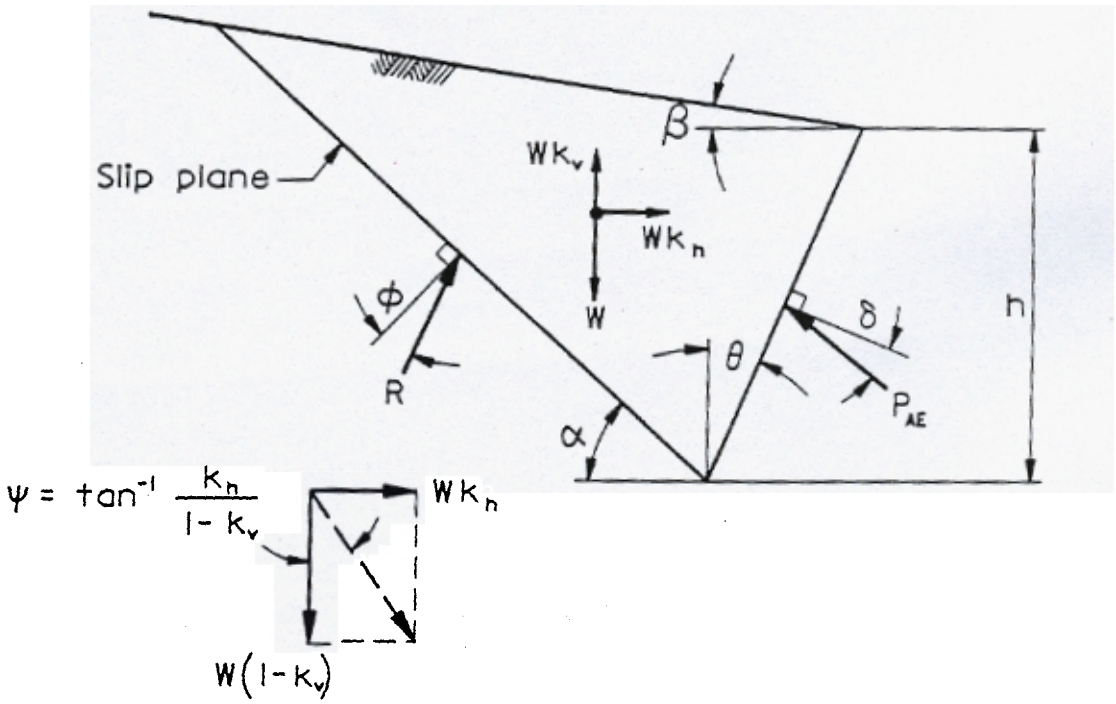

a. Mononobe-Okabe (active) wedge

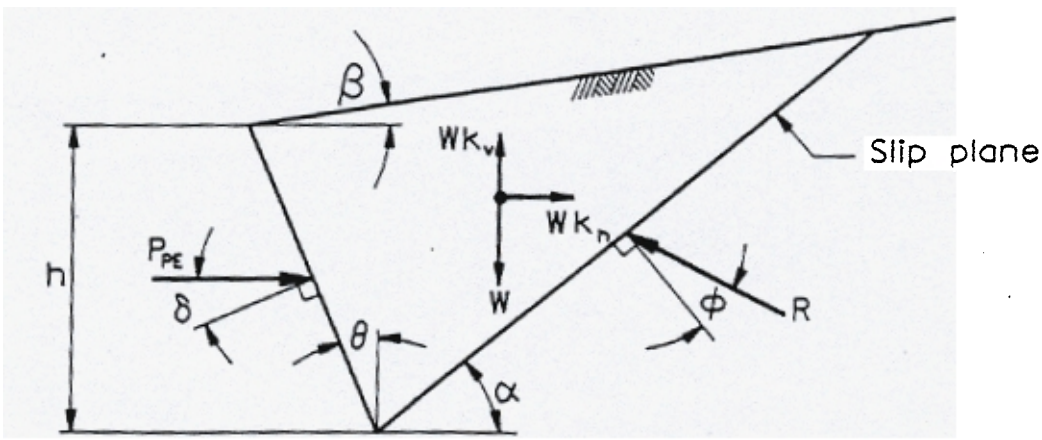

b. Passive wedge

Figure 3-34. Driving and resisting seismic wedges, no saturation

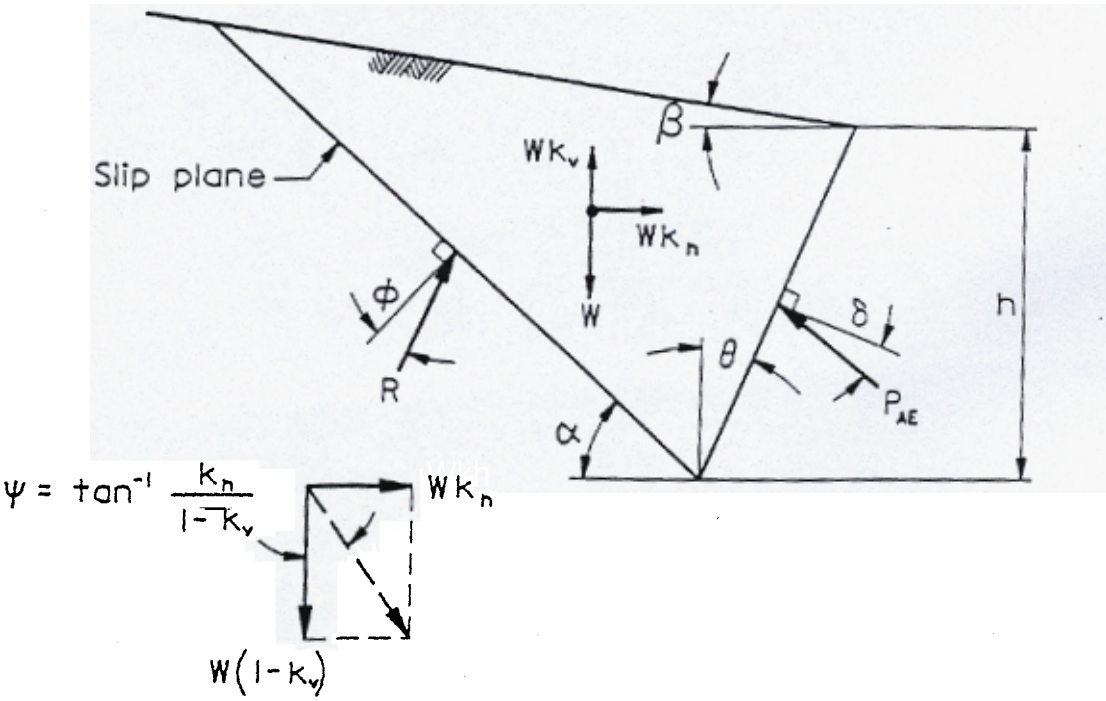

a. Mononobe-Okabe (active) wedge

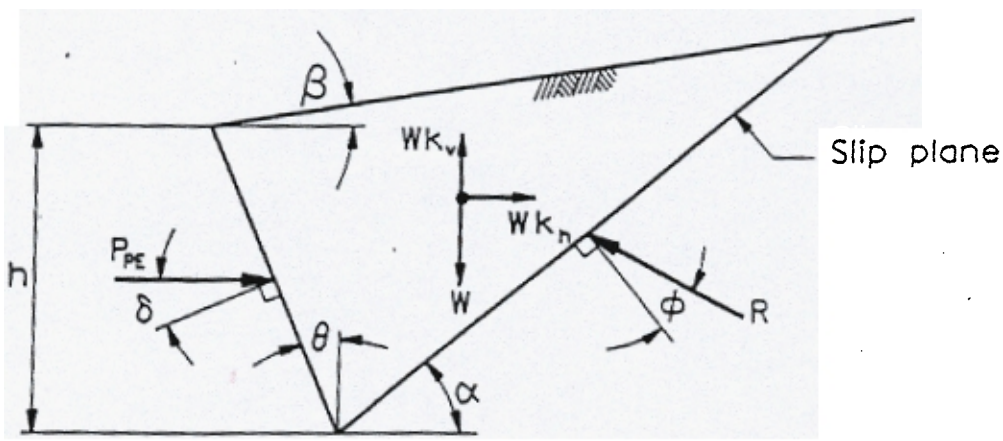

b. Passive wedge

Figure 3-34. Driving and resisting seismic wedges, no saturation

$$c_2 = \frac{\tan\phi(1 + \tan\phi \tan\beta) + (\tan\beta - k_h) + \frac{2c(1 + \tan\phi \tan\beta)}{\gamma h}}{A} \qquad [3\text{-}98]$$

$$A = (1 + k_h \tan\phi) \tan\phi + \frac{2c(1 + \tan\phi \tan\beta)}{\gamma h} \qquad [3\text{-}99]$$

$$K_c = \frac{1}{2 \sin\alpha \cos\alpha \, (\cancel{1 - \tan\phi \cos\alpha})} \cdot \frac{\tan\alpha}{\cancel{\tan\alpha - \tan\beta}} \qquad [3\text{-}100]$$

d. Inertia Force of Wall. The inertia force of the wall, including that portion of the backfill above the heel or toe of the wall and any water within the backfill which is not included as part of the Coulomb wedge, is computed by multiplying the selected acceleration coefficient by the weight of the wall and backfill. This force is obtained by multiplying the mass by acceleration as follows:

$$F = ma = ma\left(\frac{g}{g}\right) = \frac{a}{g} w = k_h W \qquad [3\text{-}101]$$

e. Hydrodynamic Force Due to Water Above Ground Level. Water standing above ground can have its static pressure, acting against a wall, increased or decreased due to seismic action. Figure 3-39 shows the pressures and forces due to earthquakes for freestanding water. The dynamic force is given by Westergaard's (1933) equation as:

$$P_E = \left(\frac{2}{3}\right) C_E k_h h^2 \qquad [3\text{-}102]$$

where C_E is a factor depending upon the depth of water, h, in feet, and the earthquake period of vibration, T, in seconds. Westergaard's approximate equation for C_E in kip-second-foot units is:

$$C_E = \frac{0.051}{\sqrt{1 - 0.72\,(h/1000T)^2}} \qquad [3\text{-}103]$$

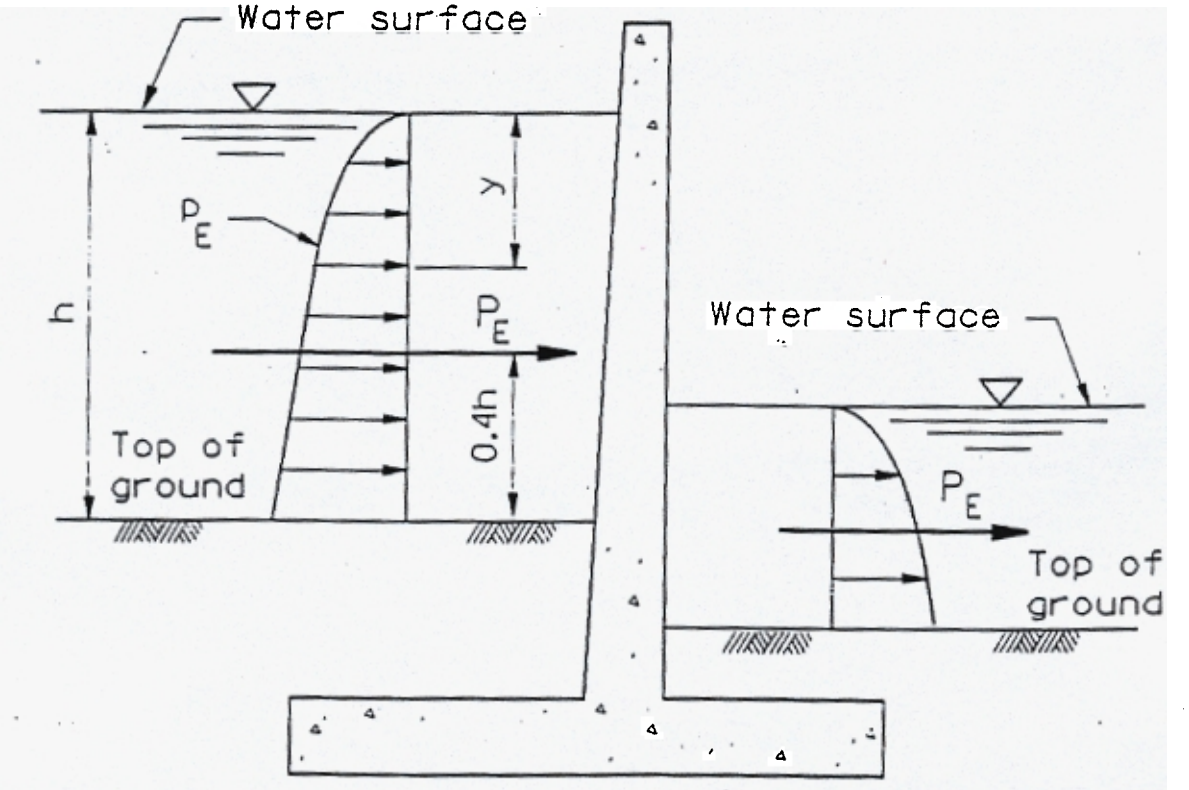

Figure 3-39. Hydrodynamic forces for freestanding water

Normally, for retaining and flood walls, C_E can be taken as 0.051. The pressure distribution is parabolic, and the pressure at any point y below the top surface is:

$$p_E = C_E k_h \sqrt{hy} \qquad [3\text{-}104]$$

The line of action of force P_E is 0.4h above the ground surface.

f. Selection of Acceleration Coefficients.

(1) Minimum Acceleration Coefficients. Minimum horizontal acceleration coefficient values for the United States and its Territories are listed in ER 1110-2-1806. In the absence of more accurate data, these values can be used as a guide for determining the acceleration coefficient to be used in the calculation of lateral earthquake forces on retaining and flood walls. As discussed in paragraph 3-26b(3)(d) where the horizontal ground acceleration is 0.2 g or less, the vertical ground acceleration can be neglected for all

Inertial Forces

$P_i := k_h \cdot (W_1 + W_2 + W_3 + W_{tail} + W_{soilup})$ $\quad P_i = 3.1\,klf$

$M_i := k_h \cdot (W_1 \cdot x_{W1} + W_2 \cdot x_{W2} + W_3 \cdot x_{W3} + W_{tail} \cdot x_{Wtail} + W_{soilup} \cdot x_{Wsoilup})$ $\quad M_i = 12.6\,kip \cdot \frac{ft}{ft}$

Total Earthquake

$M_{eq} := M_{ew} + M_{es} + M_i$ $\quad P_{eq} := P_{es} + P_{ew} + P_i$ $\quad M_{eq} = 65.3\,kip \cdot \frac{ft}{ft}$ $\quad P_{eq} = 9.3\,klf$

Moment Arm for T = $x_T := w_f - 2 \cdot ft$ $\quad x_T = 5.5\,ft$

Assume $\quad T := 14.5 \cdot klf$

Sum of Mo $\quad M_o := R_{u1} \cdot x_{u1} + R_{u2} \cdot x_{u2} + R_s \cdot y_s + R_{w2} \cdot y_{w2} + M_{eq}$ $\quad M_o = 137001.4\,lb$

Sum of Mr $\quad M_r := (W_1 \cdot x_{W1} + W_2 \cdot x_{W2} + W_3 \cdot x_{W3} + W_{tail} \cdot x_{Wtail} + W_{soilup} \cdot x_{Wsoilup}) + R_{w1} \cdot y_{w1} + T \cdot x_T$

$M_r = 117336.2\,lb$

$R := (W_1 + W_2 + W_3 + W_{tail} + W_{soilup}) + T - R_{u1} - R_{u2}$

the eccentricity from O $\quad e_o := \left| \frac{M_r - M_o}{R} \right|$ $\quad e_o = 1.0\,ft$

the eccentricity from the cl $\quad e_r := \left| \left(\frac{w_f}{2} - e_o \right) \right|$ $\quad e_r = 2.7\,ft$ $\quad$ less than or equal to $\frac{w_f}{2} = 3.7\,ft$

$T_{01} := T$ $\quad$ **okay**

<u>Check the Bearing Capactiy at the Downstream Face</u>

$\sigma_B := \frac{4 \cdot R}{3 \cdot (w_f - 2 \cdot e_r)}$ $\quad \sigma_B = 6.1\,tsf$ $\quad \sigma_B = 85.0\,psi$

From EM-1110-2-2200 $\quad \sigma_{all} := 0.9 \cdot 4000 \cdot psi$ $\quad \sigma_{all} = 3600.0\,psi$ $\quad$ see page 1-6

Concrete is okay

1-27

Φ GEI Consultants, Inc.

Project No.: 01179
Date: 7/01 By: MPW

Chkd: _____ By: _____

Client: LEA
Project: Allendale Dam
Subject: Stability

Check the Factor of Safety Against Sliding

Compute Friction Force, F_F without considering tension force

$F_F := \mu \cdot \left[\left(W_1 + W_2 + W_3 + W_{tail} + W_{soilup} \right) - R_{u1} - R_{u2} \right] + c \cdot w_f$ $\quad F_F = 13395.8\,plf$

Sum of Resisting Forces $= P_R := F_F + R_{w1}$ $\quad P_R = 13895.0\,plf$

Sum of Driving Forces $= P_D := R_s + R_{w2} + P_{eq}$ $\quad P_D = 19211.7\,plf$

Factor of Safety Against Sliding $= FS := \frac{P_R}{P_D}$ $\quad FS = 0.72$ < 1.1 from EM-2-2200

Compute Force Required for Tenison Anchor to Increase FS to acceptable FS = 1.1

$T := 18.5 \cdot klf$

where $F_F := \mu \cdot T + F_F$ $\quad P_R := F_F + R_{w1}$

$\frac{P_R}{P_D} = 1.3$

$T_{s1} := T$ $\quad T_{s1} = 18.5\,klf$ T for sliding

$T_{s1} = 18.5\,klf$ T for sliding CONTROLS

Since the 100 yr flood case controls check the bearing for earthquake with T = 18.5 klf.

Assume $T := 18.5 \cdot klf$

Sum of Mo $M_o := R_{u1} \cdot x_{u1} + R_{u2} \cdot x_{u2} + R_s \cdot y_s + R_{w2} \cdot y_{w2} + M_{eq}$ $M_o = 137001.4\,lb$

Sum of Mr $M_r := (1 - k_v) \cdot (W_1 \cdot x_{W1} + W_2 \cdot x_{W2} + W_3 \cdot x_{W3} + W_{tail} \cdot x_{Wtail} + W_{soilup} \cdot x_{Wsoilup}) + R_{w1} \cdot y_{w1} + T \cdot x_T$

$M_r = 130967.5\,lb$

$R := (1 - k_v) \cdot (W_1 + W_2 + W_3 + W_{tail} + W_{soilup}) + T - R_{u1} - R_{u2}$

the eccentricity from O $e_o := \left| \frac{M_r - M_o}{R} \right|$ $e_o = 0.3\,ft$

the eccentricity from the cl $e_r := \left| \left(\frac{w_f}{2} - e_o \right) \right|$ $e_r = 3.5\,ft$ less than or equal to $\frac{w_f}{2} = 3.7\,ft$

$T_{01} := T$

okay

Check the Bearing Capactiy at the Downstream Face

$\sigma_B := \frac{4 \cdot R}{3 \cdot (w_f - 2 \cdot e_r)}$ $\sigma_B = 24.2\,tsf$ $\sigma_B = 336.5\,psi$

GEI Consultants, Inc.

Client LEA	Project 01179	Page 1-28
	Date 6/28/01	By MMC
Subject Allendale Dam Stability	Checked	By
	Approved	By

NORMAL POOL & EARTHQUAKE GEOMETRY

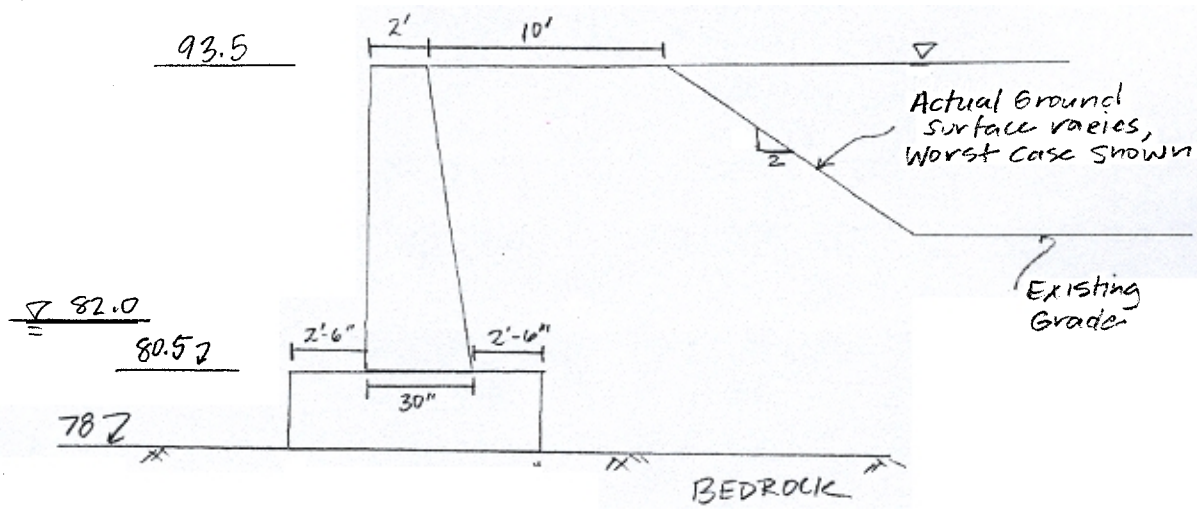

FREE BODY DIAGRAM

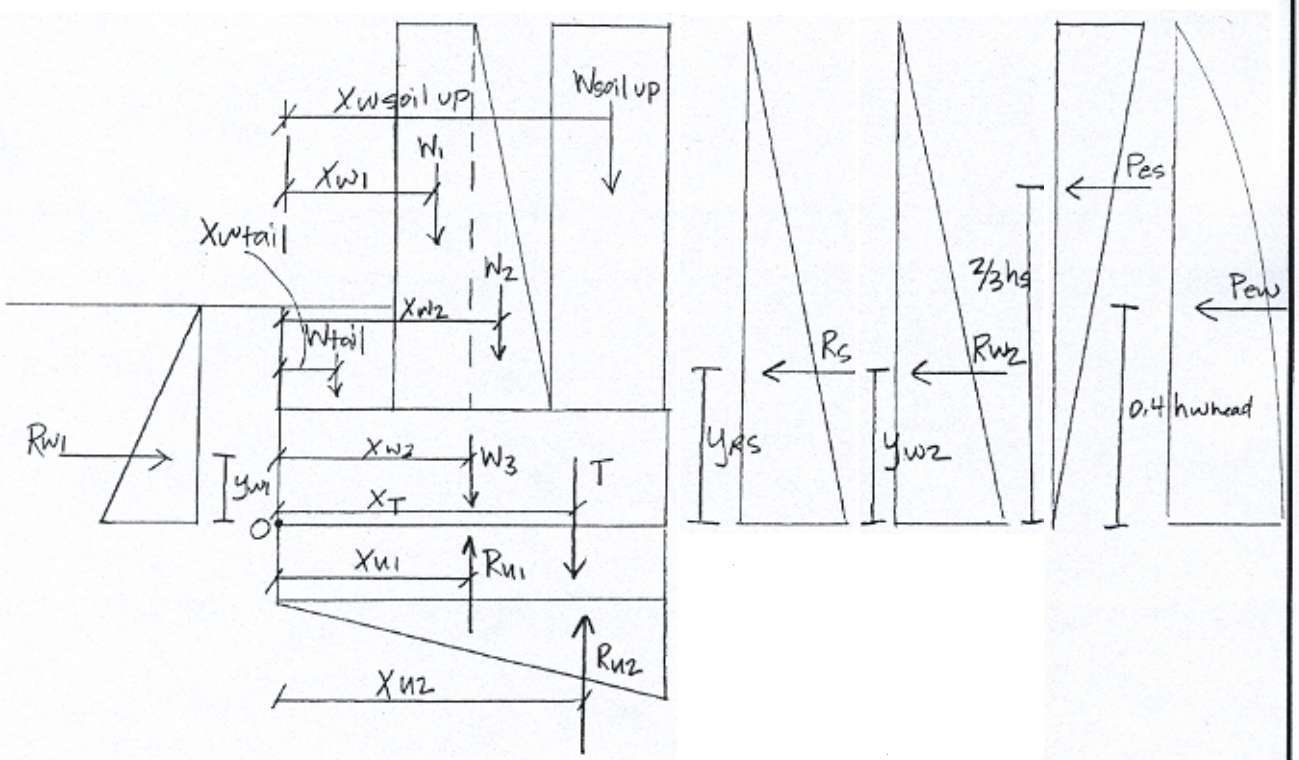

Section 2: Design of Rock Anchors

Subject	Pages
Size anchor and corrosion protection	1-4
Rock anchor embedment	5-9
Check rock anchor spacing vs capacity of footing	10-16

Φ GEI Consultants, Inc.

Client: LEA
Project: Allendale Dam
Subject: Stability

Project No.: 01179
~~Date:~~ 7/1 By: MPW
Chkd: 7/01 By: JAS

Design Rock Anchors

Use EM1110-10-2907

See figure for terms and dimensions.

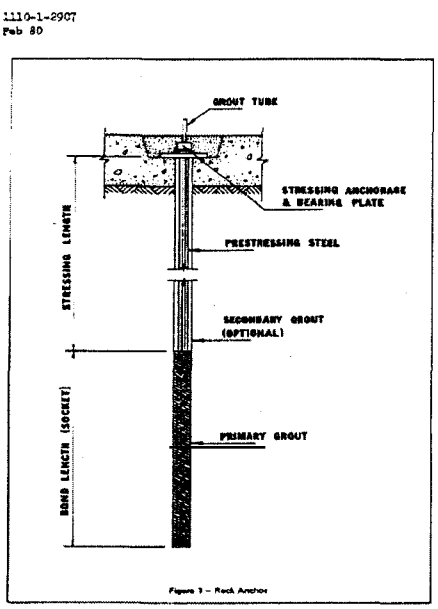

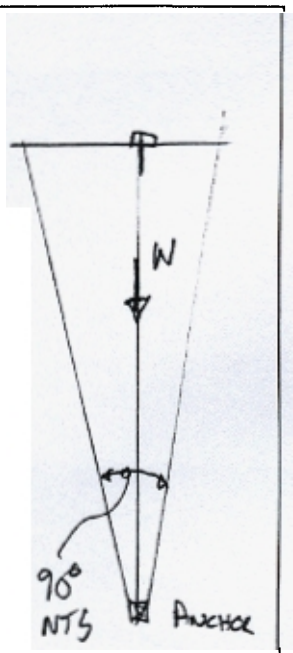

1) Determine Load on Anchor and Size Anchor.

2) Determine Bond In Rock

3) Calculate Bond Zone

4) Check Cone Pullout
 a single bolt
 b group effects

1) Determine Load on Anchor and Size Anchor

From Page 1-13, 1-18, & 1-27 the maximum load on the anchor is.

$T_{max} := 18.5 \cdot klf$

assume that the anchors are space $s := 5.0 \cdot ft$

The anchor load will be $P_{anc} := T_{max} \cdot s$ $\quad P_{anc} = 92.5\,kip$

Note that the EM refers to the PTI design handbook for Rock Anchor Design. Use PTI Procedures:

$\sigma_{design} := 0.6 \cdot GUTS$ 4.3.2.4 PTI manual. For Reinforcing Steel use GUTS = FY

Use mechanicaly anchored high strength coil rods. Williams Hollow Core 150 ksi Anchors.
Note Williams recommended design load is 0.5 GUTS less than PTI okay.

For 2-inch-diameter Rock Bolt. $P_{all} := 150 \cdot kip$ greater than $P_{anc} = 92.5\,kip$ See attached pages 2-2 & 2-3

For corrosion protection the hollow core bar pumps the grout down the inside of the bar with the grout flowing from the tip back up to the ground surface. Since the design load is clamped into the anchor prior to grouting, the grout will remain in compression for any load less than the final lock off load, and hence the grout will not crack if loads do not ecxceed the final lock off load. To provide additional security lock off at 10% above design Load.

The area of the bar at the thread is $A_t := 2.427 \cdot in^2$ $\quad od_t := \sqrt{\frac{A_t \cdot 4}{\pi}}$ $\quad od_t = 1.8\,in$

$A_{req} := \frac{P_{anc}}{0.5 \cdot 124 \cdot ksi}$ $\quad A_{req} = 1.5\,in^2$ $\quad od_{req} := \sqrt{\frac{A_{req} \cdot 4}{\pi}}$ $\quad od_{req} = 1.4\,in$

$od_t - od_{req} = 0.4\,in$ at least two tenths of an inch extra steel available to be corroded. Okay

Note EM 1110-1-2907 (see attached pages) will accept fully grouted permanent anchors without additoinal corrosion protection. (2-4)

· LOCK"® ROCK BOLTS

ROUTING • PERMANENT

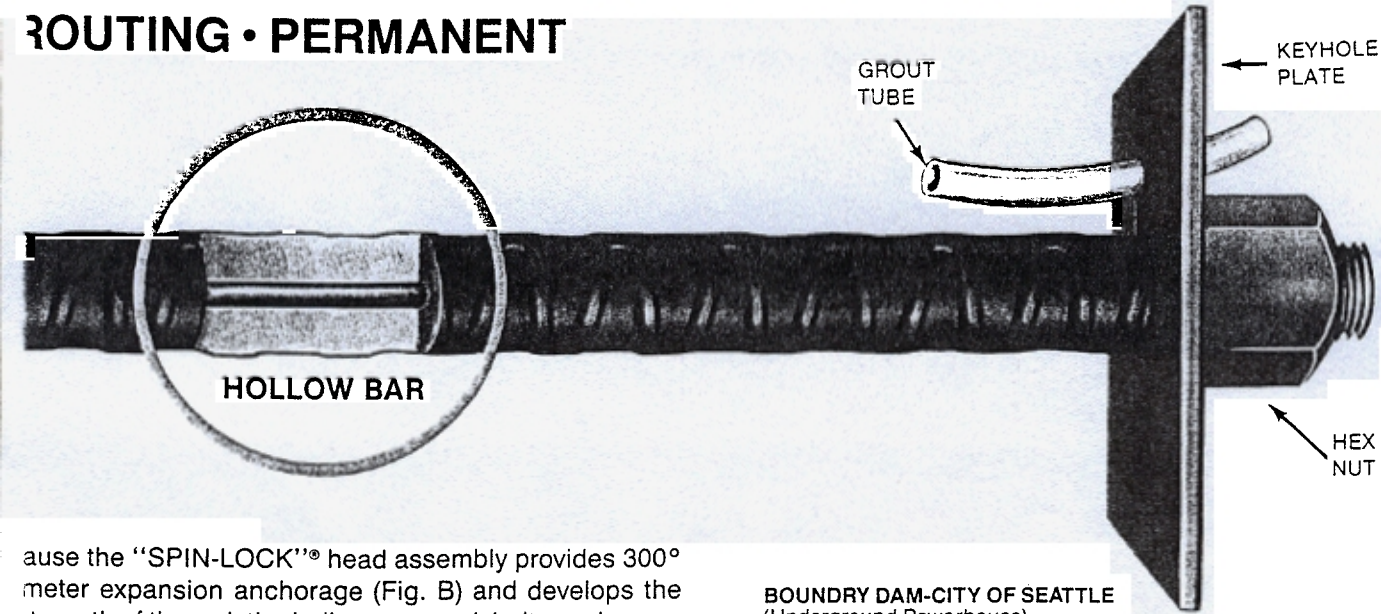

ause the "SPIN-LOCK"® head assembly provides 300° meter expansion anchorage (Fig. B) and develops the strength of the rod, the hollow-core rock bolt may be pressed to the desired load and tested prior to gouting.

BOUNDRY DAM-CITY OF SEATTLE
(Underground Powerhouse)
Design - Bechtel Corp
Prime Contractor - Mannix S.G.S.

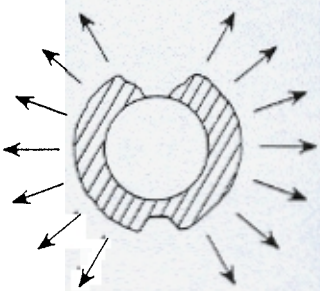

B) Williams "Spin-Lock" head assem give a 300° perimeter expansion anchor. For more information on "Spin-Lock" assemblies, turn to page 20.

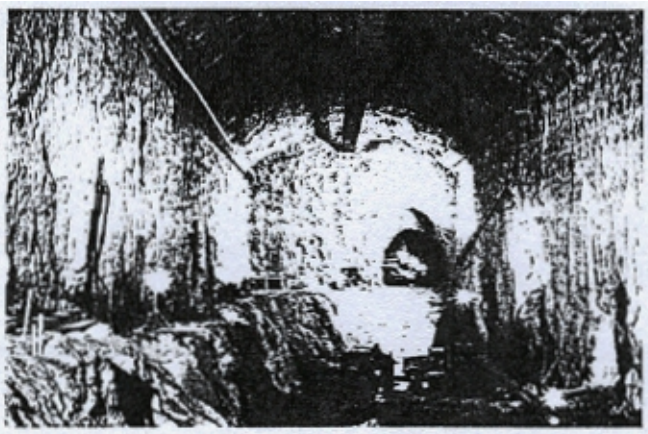

STRUCTURAL PROPERTIES

ield Stress	Ultimate Stress	Elongation in 2"	Reduction of Area
91 KSI	124 KSI	15%	40%

IH HIGH GRADE HOLLOW-CORE PRE-STRESSABLE ROCK & CONCRETE ANCHOR **ASTM A 615 DEFORMATION PATTERN**

DIA. & HREADS ER IN.	NET AREA THRU THREADS IN.²	RECOMMENDED DESIGN LOAD AT 50% OF ULTIMATE	MAXIMUM WORKING LOAD TO YIELD	ULTIMATE STRENGTH (6)	ROCK TYPE	DRILL HOLE DIA. (1)	TYPE HEAD ASS'Y	TORQUE FT.-LB. TO EXPAND SHELL (2)	TORQUE FT.-LB. ON NUT FOR TENSION	PART NUMBER
1"-8 25mm)	.535 (345mm²)	33,000 LBS. (146.8 kN)	47,000 LBS. (209.1 kN)	66,000 LBS. (293.6 kN)	Hard & Medium Hard & Medium Medium & Weak Weak Rock & Concrete Rock & Concrete	1-5/8"-(41mm) 1-3/4"-(44mm) 1-3/4"-(44mm) 1-3/4"-(44mm) 2"-(51mm)	A 13 A 14 B 14 C 14 B 16	250 (Do not exceed 450 ft.-lbs.)	400	R1H08A13 R1H08A14 R1H08B14 R1H08C14 R1H08B16
-3/8"-8 35mm)	1.115 (720mm²)	69,000 LBS. (306.9 kN)	100,000 LBS. (444.8 kN)	138,000 LBS. (613.8 kN)	Hard & Medium Rock & Concrete Rock & Concrete	2-1/4"-(57mm) 2-1/2"-(63mm) 3"-(76mm)	C 18 B 20 B 24	750 (Do not exceed 1200 ft.-lbs.)	Note (3)	R1H11C18 R1H11B20 R1H11B24
2"-6 51mm)	2.427 (1566mm²)	150,000 lbs. (667.2 kN)	219,000 lbs. (974.2 kN)	300,000 lbs. (1334.4 kN)	Rock & Concrete	3-1/2"-(89mm)	C 28	1000/ (3700 ft.-lbs.)	Note (3)	R1H16C28

te: Same as table at left.

SOLID HIGH TENSILE "SPIN-LOCK" ROCK BOLTS

2-3

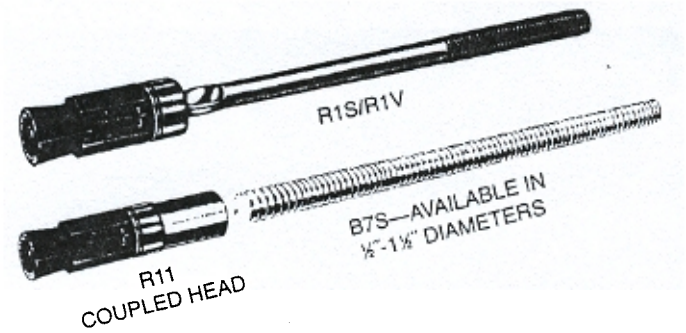

R1S/R1V/B7S HIGH TENSILE BOLTS

The Williams "SPIN-LOCK" head assembly combined with High Tensile, High Impact or Continuous Coil thread rod results in an anchor for all types of hard and medium rock bolting situations where high tensile loadings are required. In cold weather environment, Williams R1V series is recommended for improved ductility.

STRUCTURAL PROPERTIES
R1S/B7S

Yield Stress
90 KSI

Ultimate Stress
120 KSI

Elongation in 2"
11%

Reduction of Area
20%

R1S/B7S HIGH TENSILE "SPIN-LOCK" ROCK AND CONCRETE ANCHOR BOLT — ASTM A-108/C1045

DIA. & THREADS PER IN. DIA.	RECOMMENDED DESIGN LOAD AT APPROX. 2:1 SAFETY FACTOR	MAXIMUM WORKING LOAD TO YIELD	(6) AVERAGE ULTIMATE STRENGTH	ROCK TYPE	DRILL HOLE DIA. (1)	TYPE HEAD ASS'Y	TORQUE FT.-LB. TO EXPAND SHELL (2)	TORQUE FT.-LB. ON NUT FOR TENSION	PART NUMBER
1/2"-13 (12mm)	9,000 lbs. (40.0 kN)	13,000 lbs. (57.8 kN)	18,000 lbs. (80.1 kN)	Hard & Medium Hard & Medium Hard & Medium	1-1/4"-(32mm) 1-5/8"-(41mm) 1-3/4"-(44mm)	A 10 A 13 A 14	50 (Do not exceed 70 ft.-lbs.)	85 85 85	R1S04A10 R1S04A13 R1S04A14
5/8"-11 (16mm)	11,250 lbs. (50.0 kN)	18,000 lbs. (80.0 kN)	22,500 lbs. (100.0 kN)	Hard & Medium Hard & Medium Hard & Medium	1-1/4"-(32mm) 1-5/8"-(41mm) 1-3/4"-(44mm)	A 10 A 13 A 14	125 (Do not exceed 70 ft.-lbs.)	125 125 125	R1S05A10 R1S05A13 R1S05A14
3/4"-10 (20mm)	19,000 lbs. (84.5 kN)	30,000 lbs. (133.5 kN)	38,000 lbs. (169.0 kN)	Hard & Medium Hard & Medium Medium & Weak Weak Rock & Concrete	1-5/8"-(41mm) 1-3/4"-(44mm) 1-3/4"-(44mm) 1-3/4"-(44mm)	A 13 A 14 B 14 C 14	210 (Do not exceed 250 ft.-lbs.)	210 210 210 210	R1S06A13 R1S06A14 R1S06B14 R1S06C14
7/8"-9 (22mm)	29,000 lbs. (129.0 kN)	46,000 lbs. (204.6 kN)	58,000 lbs. (258.0 kN)	Hard & Medium Hard & Medium Medium & Weak Weak Rock & Concrete	1-5/8"-(41mm) 1-3/4"-(44mm) 1-3/4"-(44mm) 1-3/4"-(44mm)	A 13 A 14 B 14 C 14	390 (Do not exceed 410 ft.-lbs.)	390 390 390 390	R1S07A13 R1S07A14 R1S07B14 R1S07C14
1"-8 (25mm)	37,500 lbs. (166.7 kN)	60,000 lbs. (266.8 kN)	75,000 lbs. (333.5 kN)	Hard & Medium Hard & Medium Medium & Weak Weak Rock & Concrete	1-5/8"-(41mm) 1-3/4"-(44mm) 1-3/4"-(44mm) 1-3/4"-(44mm)	A 13 A 14 B 14 C 14	500 (Do not exceed 600 ft.-lbs.)	550 550 550 550	R1S08A13 R1S08A14 R1S08B14 R1S08C14
1-1/8"-3-1/2 (30mm)	42,500 lbs. (189.0 kN)	67,000 lbs. (298.0 kN)	85,000 lbs. (377.8 kN)	Hard & Medium Rock & Concrete	2"-(51mm) 2-1/4"-(57mm)	B 16 C 18	550 (600 ft.-lbs.)	770	R1S09B16 R1S09C18
1-1/4"-7 (32mm)	60,000 lbs. (266.8 kN)	90,000 lbs. (400.4 kN)	120,000 lbs. (533.7 kN)	Rock & Concrete Rock & Concrete	2-1/4"-(57mm) 2-1/2"-(63mm)	C 18 B 20	750 (1200 ft.-lbs.)	1000	R1S10C18 R1S10B20
1-3/8"-8* (35mm)	67,500 lbs. (300.3 kN)	110,000 lbs. (489.2 kN)	135,000 lbs. (600.4 kN)	Weak Rock & Concrete Weak Rock & Concrete	2-1/4"-(57mm) 2-1/2"-(63mm)	C 18 B 20	750 (Do not exceed 1600 ft.-lbs.)	1525 1525	R1S11C18 R1S11B20
2"-6 (51mm)	155,000 lbs. (689.4 kN)	260,000 lbs. (1156.6 kN)	310,000 lbs. (1379.0 kN)	Rock & Concrete	3-1/2"-(89mm)	C 28	1000 (4000)	Note (3)	R1S16C28

1-1/8" Diameter available in the B7S series only. 2" Diameter available in R1S series only.
*1-3/8" Diameter available in Canada only.

R1V

Yield Stress
105 KSI

Ultimate Stress
125 KSI

Elongation in 2"
16%

Reduction of Area
50%

Charpy at –20° F
20 ft./lbs.

R1V HIGH IMPACT SPIN LOCK ANCHORS — ASTM A-193 GRADE B-7

1/2"-13 (12mm)	9,000 lbs. (40.0 kN)	15,000 lbs. (66.6 kN)	18,000 lbs. (80.1 kN)	Hard & Medium Hard & Medium Hard & Medium	1-1/4"-(32mm) 1-5/8"-(41mm) 1-3/4"-(44mm)	A 10 A 13 A 14	50 (Do not exceed 70 ft.-lbs.)	85 85 85	R1V04A10 R1V04A13 R1V04A14
3/4"-10 (20mm)	21,000 lbs. (93.3 kN)	36,000 lbs. (159.9 kN)	42,000 lbs. (186.6 kN)	Hard & Medium Hard & Medium Medium & Weak Weak Rock & Concrete	1-5/8"-(41mm) 1-3/4"-(44mm) 1-3/4"-(44mm) 1-3/4"-(44mm)	A 13 A 14 B 14 C 14	210 (Do not exceed 250 ft.-lbs).	210 210 210 210	R1V06A13 R1V06A14 R1V06B14 R1V06C14
1"-8 (25mm)	38,000 lbs. (168.8 kN)	64,000 lbs. (284.4 kN)	76,000 lbs. (337.7 kN)	Hard & Medium Hard & Medium Medium & Weak Weak Rock & Concrete Hard & Medium	1-5/8"-(41mm) 1-3/4"-(44mm) 1-3/4"-(44mm) 1-3/4"-(44mm) 2"-(51mm)	A 13 A 14 B 14 C 14 B 16	500 (Do not exceed 600 ft.-lbs.)	550 550 550 550 550	R1V08A13 R1V08A14 R1V08B14 R1V08C14 R1V08B16
1-3/8"-8 (35mm)	77,500 lbs. (344.4 kN)	129,000 lbs. (573.2 kN)	154,000 lbs. (684.4 kN)	Weak Rock & Concrete Weak Rock & Concrete	2-1/4"-(57mm) 2-1/2"-(63mm)	C 18 B 20	750 (Do not exceed 1600 ft.-lbs.)	1725 1725	R1V11C18 R1V11B20
2"-6 (51mm)	165,000 lbs. (733.3 kN)	278,000 lbs. (1235.5 kN)	330,000 lbs. (1466.6 kN)	Rock & Concrete	3-1/2"-(89mm)	C 28	1000 (4000)	Note (3)	R1V16C28

NOTE: Refer to bottom of page 11.

2-4

TENTATIVE RECOMMENDATIONS

Permanent rock anchors utilizing a two stage grout system may be fabricated without the use of sheathing above the bond length. Grout shall be injected from the bottom of the anchor to the top of the bond length. Grout quantity shall be continuously monitored. Secondary grouting shall be applied to the stressing length after stressing and any required stress monitoring are complete and accepted.

Special attention shall be given to assure corrosion protection of the tendon at the connection to the anchorage hardware. The anchorage hardware shall be protected by embedment in concrete or other suitable material.

4. SOIL ANCHORS

4.1 Description

A prestressed soil anchor is a high strength steel tendon, fitted with a stressing anchor at one end and an anchor device permitting force transfer to the soil on the other end. These anchors, which are used in clay, sand or other granular soils, are inserted into a prepared hole or driven into the soil. Concrete is gravity placed to form an anchorage, or grout is injected under pressure to form a bulb of grout to anchor the tendon. Pressure bulb soil anchors are usually equipped with a casing, which is withdrawn during the grouting operation. Subsequent to placement of anchor grout, the soil anchor is stressed and anchored at a specified force.

Soil anchors may be classified as follows depending on their use in cohesive or noncohesive soils.

Soil anchors in noncohesive material are generally pressure grouted *(See Fig. 2)*. They may be installed by two procedures:

1. Auger drilled - using hollow stem continuous flight augers normally of 6" to 10" diameter, the tendon is placed through the hollow stem of the auger before or after drilling is completed. Concrete or grout is then pumped under pressure through the hollow stem and the auger is withdrawn as the grout fills the hole.

2. Drilled or Driven Casing Pressure Grouted. In this type of anchor a 3" to 6" diameter casing is either drilled or driven into the ground to the final depth. The casing is then cleaned

COMMENTARY

A "lost point" on the bottom end of the casing is used in this method. The point remains in the ground during and after casing withdrawal.

2) Determine Bond In Rock

From attached table use $\sigma_{bond} := 250 \cdot psi$ (pg. 2-6)

$\sigma_{ra} := \frac{\sigma_{bond}}{2.5}$ $\sigma_{ra} = 100.0 psi$

3) Calculate Bond Zone

The diameter of a number 11 bar is $d_{b11} = 1.4 in$ ACTUAL 3½ ϕ OKAY

allowing for a 1 inch anualr space a $d_{hole} := 4in$ should provide sufficient space

$L := \frac{P_{anc}}{\pi \cdot d_{hole} \cdot \sigma_{ra}}$ $L = 6.1 ft$ use a minimum of 15 foot embedment per emperical data see attached table ~~4-8~~ 2-7

for a passive anchor

4) Check Cone Pullout
a single bolt

Assume a bolt length $L := 20 \cdot ft$

Note bolts come in 50-foot lengths so 20 feet gives some play (and allows for the footing thickness)

use a 90 deg cone from the middle of the anhor head $\phi := 90 \cdot deg$ (Pg 2-8)

The radius of the cone at the ground surface is $R := L$

The volume of a single cone is $V_c := \frac{\pi}{3} \cdot R^2 \cdot L$ $V_c = 8377.6 ft^3$

The unit weight of the rock is $\gamma := 140 \cdot pcf - 62.4 \cdot pcf$ $\gamma = 77.6 pcf$ $FS := 2$

$P_r := V_c \cdot \gamma$ $P_r = 650.1 kip$

$\frac{P_r}{FS} = 325.1 kip$ greater than $P_{anc} = 92.5 kip$

b group effects
see attached reference $a := s$ bolt spacing (Pg 2-9)

$\frac{a}{R} = 0.3$ from fig 5.9 $\psi := 0.65$ $P_{group} := \psi \cdot P_r$

$P_{group} = 422.6 kip$ $\frac{P_{group}}{FS} = 211.3 kip$ greater than $P_{anc} = 92.5 kip$

RECOMMENDATIONS

3. Method of drilling and cleaning the drill hole
4. Drillhole diameter
5. Strength of the grout
6. Grouting procedure

COMMENTARY

The drillhole diameter is a function of tendon size and degree of corrosion protection required as well as drilling methods and equipment.

Typical Ultimate Bond Stresses for Rock Anchors

Rock Type	Ultimate Bond Stress Between Sound Rock and Anchor Grout (PSI) [MPa]
Granite & Basalt	250 - 450 [1.72 - 3.10]
Dolomitic Limestone	200 - 300 [1.38 - 2.07]
Soft Limestone	150 - 200 [1.03 - 1.52]
Slates & Hard Shales	120 - 200 [0.83 - 1.38]
Soft Shales	30 - 120 [0.21 - 0.83]
Sandstone	120 - 250 [0.83 - 1.72]
Concrete	200 - 400 [1.38 - 2.76]

The typical values shown in this table are not intended for final design. Working bond stresses should be established on a project-by-project basis after review of geologic data and rock cores.

Each rock anchor should be tested in order to verify the load carrying capacity of the anchor and to preload the tendon (see Section 4.3.7 "Anchor Testing and Stressing").

4.3.3 Fabrication

4.3.3.1 Materials

Anchor material shall be in accordance with PTI Guide Specification for Post-Tensioning Materials.

Anchor material shall consist of either single or multiple elements of the following:

a) Wires conforming to ASTM Designation A421, "Uncoated Stress-Relieved Wire for Prestressed Concrete."

TABLE 4-6 Fixed Anchor Lengths for Cement Grouted Rock Anchors Recommended in Practice

Fixed Anchor Length (meters)		
Minimum	Range	Source
3.0		Sweden—Nordin (1968)
3.0		Italy—Berardi (1967)
	4.0–6.5	Canada—Hanna and Seeton (1967)
3.0	3.0–10.0	Britain—Littlejohn (1972)
	3.0–10.0	France—Fenoux and Portier (1972)
	3.0–8.0	Italy—Conti (1972)
4.0 (very hard rock)		South Africa—Code of Practice (1972)
6.0 (soft rock)		South Africa—Code of Practice (1972)
5.0		France—Bureau Securitas (1972)
5.0		USA—White (1973)
3.0	3.0–6.0	Germany—Stocker (1973)
3.0		Italy—Mascardi (1973)
3.0		Britain—Universal Anchorage Co. Ltd. (1972)
3.0		Britain—Ground Anchors Ltd. (1974)
3.5 (chalk)		Britain—Associated Tunnelling Co. Ltd. (1973)

From Littlejohn (1980).

in the direction of the top of the borehole, as shown in Fig. 4-15. Pullout resistance is provided by this large inverted cone, so that the deeper the penetration of the anchor in rock material the larger the ultimate load that can be resisted by the anchor–rock interaction. In bedded or fractured rock, cone size and shape will vary with the distribution of bedding and cleavage planes and also with the grout take in the fissures, whereas in badly decomposed and broken material the stress distribution pattern will approach an underreamed anchor in clay.

It is documented from field experience that the mode of failure of shallow anchors in rock (total length <10 ft) follows the conical form described, although there is difference of opinion regarding the angle of the cone (see also subsequent sections). High-capacity anchors should not be constructed with the fixed zone in close proximity to the surface, since their capacity is governed by cone failure.

An important factor relevant to underreamed anchors is the mechanism of load transfer from the steel tendon to the grout and then to the rock. Stress distribution should be as even as possible, and local concentration should not occur. In this context, a plain smooth bar terminating in end-bearing plate is unsuitable since it will cause premature failure of the grout or rock by crushing in the end zone due to intense stresses concentrated at this location.

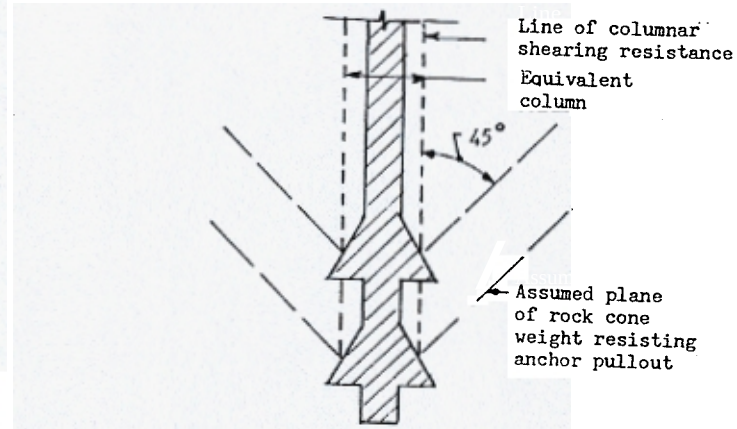

Fig. 4-15 Diagrammatic presentation of underreamed anchor in rock. Assun ure plane along equivalent column.

For rock anchors with average borehole diameter about 115 mm in), underreams are usually formed with 12-in (300-mm) diameter. two or four underreams are provided per anchor. The advantages derreams diminish as rock strength increases, and with hard massiv underreaming is not necessary. Provided the tendon layout is desig ensure uniform bond distribution (e.g., basketed and bonded strand te the cone effect is approximated by the following empirical expressi lating fixed length L, applied load P, underream diameter D_u, and w (allowable) shear stress τ_w (Nicholson et al., 1982):

$$L = \frac{P}{\frac{2}{3}\pi D_u \tau_w}$$

Equation (4-10) replaces the cone effect by an equivalent columnar resistance. The working (allowable) stress τ_w is derived from the ult shear resistance of the grout or rock (whichever is smaller) with an a priate factor of safety, not less than 2 and preferably 3.

4-7 FAILURE OF COMPRESSED TUBE ANCHORS IN ROCK

The response of compressed tube anchors to load was discussed in Se 3-2 in conjunction with the behavior shown in Fig. 3-7. The transfer of from the tendon to the anchorage medium through a tube subjecte compression is accomplished under increased bond resistance along th terface as the walls of the tube undergo bulging. This process also elimi the disking normally observed around a grouted bar or strand in ten

TABLE 5-1 Geometry of Rock Failure Cone and Its Relative Position

Geometry of Inverted Cone		
Included Angle	Position of Apex	Source
60°	Base of anchor	Canada—Saliman and Schaefer (1968)
60°	Base of anchor	USA—Hilf (1973)
90°	Base of anchor	Britain—Banks (1955)
90°	Base of anchor	Britain—Parker (1958)
90°	Base of anchor	Czechoslovakia—Hobst (1965)
90°	Base of anchor	USA—Wolf et al. (1965)
90°	Base of anchor	Canada—Brown (1970)
90°	Base of anchor	Australia—Longworth (1971)
90°	Base of rock bolt	USA—Lang (1972)
90°	Base of anchor	USA—White (1973)
90°	Base of anchor where load is transferred by endplate or wedges	Germany—Stocker (1973)
90°	Middle of grouted fixed anchor where load is transfered by bond	Germany—Stocker (1973)
90°	Middle of anchor	Britain—Morris and Garrett (1956)
90°	Middle of anchor	India—Rao (1964)
90°	Middle of anchor	USA—Eberhardt and Veltrop (1965)
90°	Top of fixed anchor	Australia—Rawlings (1968)
90°	Top of fixed anchor	Austria—Rescher (1968)
90°	Top of fixed anchor	Canada—Golder Brawner (1973)
60°[a]–90°	Middle of fixed anchor where load is transferred by bond	Britain—Littlejohn (1972)
60°[a]–90°	Base of anchor where load is transferred by endplate or wedges	
90°	Top of fixed anchor	Australia—Standard CA35 (1973)
60°	or base of anchor	

[a] 60° employed primarily in soft, heavily fissured, or weathered rock mass.
From Littlejohn and Bruce (1977).

TABLE 5-2 Suggested Depth of Anchor for Overall Cone Stability

Rock Type	Formula for Depth of Cone: One Anchor	Formula for Depth of Cone: Group of A
"Sound" homogeneous rock	$\sqrt{\frac{FP}{4.44\tau}}$	$\frac{FP}{2.83\tau s}$
Irregular fissured rock	$\sqrt{\frac{3F(P)}{\gamma\pi \tan\phi}}$	$\sqrt{\frac{FP}{\gamma s \tan}}$
Irregular submerged fissured rock	$\sqrt{\frac{3F(P)}{(\gamma - 1)\pi \tan\phi}}$	$\sqrt{\frac{FP}{(\gamma - 1)s}}$

From Hobst (1965).

strates the importance of obtaining quantitative data or rock fract ometry and shear strength prior to design. Brown (1970) suggests homogeneous massive rock, pullout resistance depends on the shear st and the surface area of the cone, which for a 90° angle is proporti $4\pi h^2$, where h is the depth of embedment. Suggested maximum all shear stresses acting on the cone surface vary from 0.034 N/mm² (S and Schaefer, 1968) to 0.024 N/mm² used by Hilf (1973) in conjunctio a factor of safety 2 on a test load displacement not exceeding 12 mm

Experimental Evidence. There is an impressive scarcity of data on failure in the rock mass, hence documentation of stability theories readily available. Saliman and Schaefer (1968) present possible failure based on test results at Trinity Clear Creek, as shown in Fig. 5-5. The represent four tests on deformed steel bars grouted into 70-mm-dia. 1.5 m deep in shale sediments. In all cases failure occurred when a of grout and rock pulled out. The propagation of cracks to the surfac vides indication of the cone of influence. Using rock bulk density 2 M backanalysis of the failure loads gives the following factors of safet between 7 and 23 if the apex of the 90° cone is assumed at midpoint between 0.9 and 2.9 for a cone with its apex at the base.

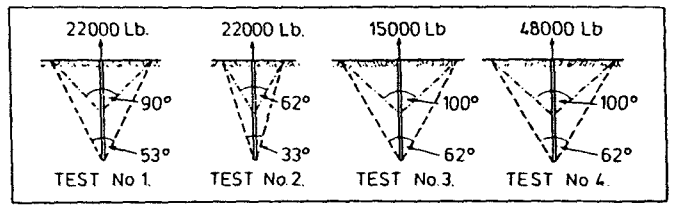

Fig. 5-5 Possible failure modes for anchors in rock mass, based on results at Clear Creek. (From Saliman and Schaefer, 1968.)

Uplift with Overlapping Anchors. For anchors with overlapping cones, the stability of the ground is analyzed as shown in Fig. 5-8. Part (a) shows an isolated anchor, and part (b) shows the overlapping in the zone of influence of the cones of two adjacent anchors. The reduction in uplift capacity for each anchor represents the volume defined by the common chord.

If T is the uplift capacity of the individual anchor, T' is the uplift capacity of the anchor in a group of anchors with overlapping cones, a is the anchor spacing, and R is the cone radius as shown in Fig. 5-8, then the adjusted uplift anchor capacity can be estimated from the relation

$$T' = \psi' T \tag{5-2}$$

where ψ' is a function of the ratio a/R, and is estimated with the help of the diagram and the table shown in Fig. 5-9.

Soil Stability with nearly Horizontal Anchors. A frequent practical case involves shallow individual anchors installed along a profile nearly horizontal or with a small inclination as shown in Fig. 5-10. This problem can arise with the uppermost row of tiebacks in a retaining wall before the next excavation level is reached or where unavailability of a deep anchorage zone restricts the anchor profile to a shallow depth. Failure is characterized by pullout of the anchorage and a mass of soil in front of the installation. As the anchor is stressed, the force is transmitted to the surrounding soil mass, which begins to yield in front of the anchorage. Under more load the shear surface in the soil mass manifests a failure plane, followed by pullout of the

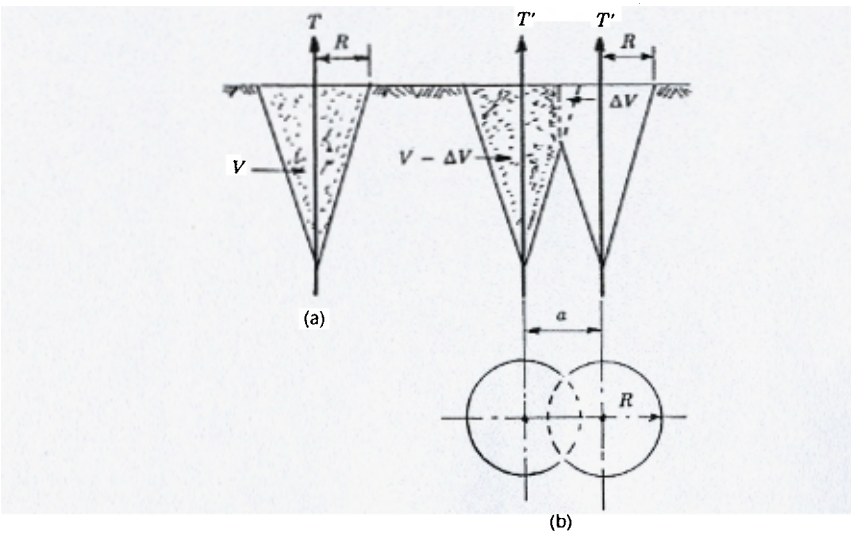

Fig. 5-8 Geometry of soil mass assumed to be mobilized at failure; anchors with overlapping cones of influence.

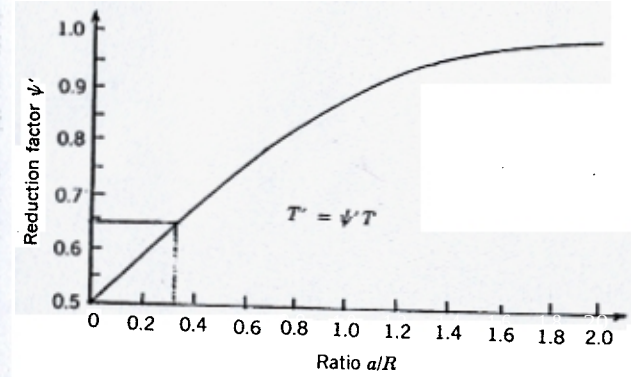

a/R	ψ'	a/R	ψ'
0	0.50	1.1	0.91
0.1	0.55	1.2	0.93
0.2	0.59	1.3	0.95
0.3	0.64	1.4	0.97
0.4	0.68	1.5	0.98
0.5	0.72	1.6	0.98
0.6	0.76	1.7	0.99
0.7	0.80	1.8	0.99
0.8	0.85	1.9	0.99
0.9	0.87	2.0	1.0
1.0	0.89		

Fig. 5-9 Adjusted uplift anchor capacity calculated from the volume of cone influence as function of the ratio a/R.

anchor. The failure mechanism in the soil mass is thus similar to the general shear failure of shallow footings.

The stability conditions can be analyzed in two ways. In the first, stability is checked assuming that failure occurs as shown in Fig. 5-10(a), whereby passive resistance and active pressures are developed in the passive and active zones as shown provided sufficient movement in the ground occurs. Resistance of the soil mass to this failure is equal to the difference $P_P - P_A$. Furthermore, the shear resistance mobilized along the plane that coincides with the axis of the anchor must be compared to the force applied to the anchor, as shown in Fig. 5-10(b). Both types of failure must be

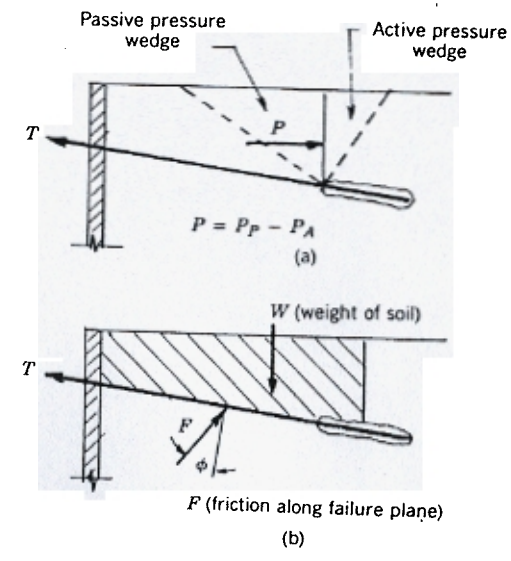

Fig. 5-10 Failure mechanism of soil mass. Inclined anchors with

Φ GEI Consultants, Inc.

Project No.: 01179
Date: 7/11 By: MPW
Chkd: 7/01 By: JAS

Client: LEA
Project: Allendale Dam
Subject: Stability

Check reinforcing required to span from anchor to anchor.

Reference: Strength Design for Reinforced Cooncrete Hydraulic Structures (Technical Engineering and Design Guides as Adapted from the USCOE, No. 2) ASCE.

$T_{max} = 18.5\,klf$ $s = 5.0\,ft$ See plan and section attached for spacing and layout. (Pb 2-11)

$M_{max} := T_{max} \cdot \frac{s^2}{8}$ $M_{max} = 57.8\,kip \cdot ft$ $V_{max} := \frac{T_{max} \cdot s}{2}$ $V_{max} = 46.3\,kip$

Minimum Beam Depth $h := 30 \cdot in$

Assume foundation width that ignores the upstream portion of the beam $bw := 4 \cdot ft$

From table 2-6 (see attached) $clr := 4 \cdot in$ (pg. 2-12)

Assume that the reinforcing in the footing matches the wall reinforcing and use No. 9 at 12 inches longitudinal anc 7 at 12 inches transverse.

$d_{b7} = 0.9\,in$ $A_7 = 0.6\,in^2$ $d_{b9} = 1.1\,in$

For inside face $d := h - \frac{d_{b7}}{2} - d_{b9} - clr$ $d = 24.4\,in$

f'c for concrete (psi) $fc := 5000 \cdot psi$ $f_y := 60 \cdot ksi$

Pb 2-13

Use load factor combining hydraulic and live of $LF := 1.7 \cdot 1.3$

phi $\phi := .9$ Bending

$\phi_s := 0.85$ Shear

Find shear capacity of beam

$V_n := \left(2 \cdot \sqrt{\frac{fc}{psi}} \cdot bw \cdot d\right) \cdot psi$ $V_n = 165.9\,kip$ $V_{all} := \frac{\phi_s \cdot Vc}{LF}$

$\phi_s \cdot V_n = 141.0\,kip$ is greater than $LF \cdot V_{max} = 102.2\,kip$ **SHEAR OKAY**

Find Moment Capacity of Beam

$A_{s1} := 4 \cdot A_7$

Find Moment Capacity of Wall $\rho := \frac{A_{s1}}{bw \cdot d}$ $d = 2.0\,ft$ $bw = 4.0\,ft$

$M_n := \rho \cdot f_y \cdot bw \cdot d^2 \cdot \left(1 - \frac{\rho \cdot f_y}{1.7 \cdot fc}\right)$

$\phi \cdot M_n = 260.1\,kip \cdot ft$ Greater than the Moment in the beam of $LF \cdot M_{max} = 127.8\,ft\,kip$ **MOMENT OKAY**

Check failure of the anchor at the back of the slab. See attached free body diagram. In the stability analysis the anchc will have a frictional force equal to the clamping force of the anchor times a coefficient of friction. The wedge of concret will have to resist this lateral force.

To get the capacity of the wedge ignore shear friction and use analysis similar to anchor bolts (see attached ACI Reference).

GEI Consultants, Inc.

		Project 01179	Page 2-11
Client	LEA	Date 06/28/01	By MPW
Subject	ALLENDALE DAM	Checked 7/2/01	By MMC
		Approved	By

ANCHOR DESIGN

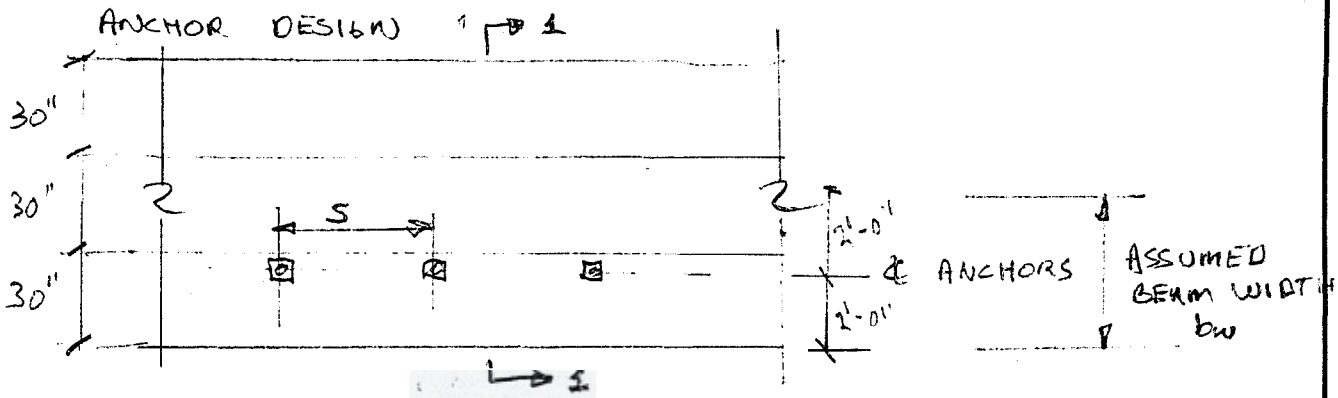

PLAN @ WALL

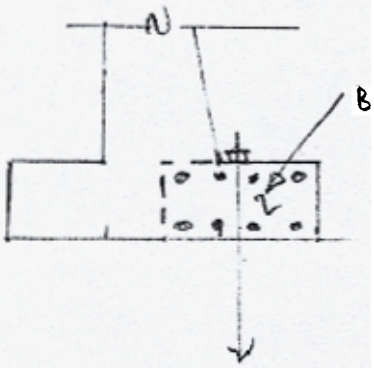

SECTION 1-1

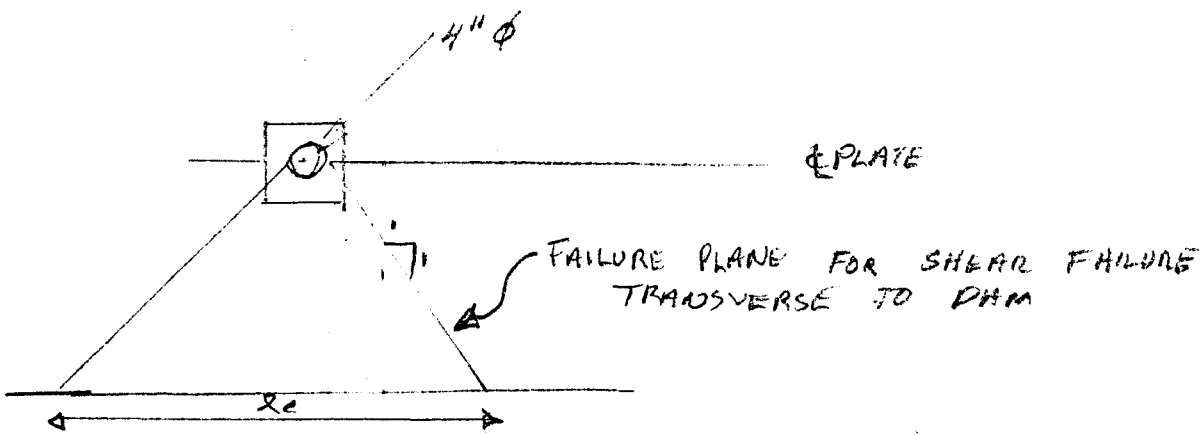

PLAN AT ANCHOR

2-12

CHAPTER 2

DETAILS OF REINFORCEMENT

2-1. General

This chapter presents guidance for furnishing and placing steel reinforcement in various concrete members of hydraulic structures.

2-2. Quality

The type and grade of reinforcing steel should be limited to ASTM A 615 (Billet Steel), Grade 60. Grade 40 reinforcement should be avoided since its availability is limited and designs based on Grade 40 reinforcement, utilizing the procedures contained herein, would be overly conservative. Reinforcement of other grades and types permitted by ACI 318 may be permitted for special applications subject to the approval of higher authority.

2-3. Anchorage, Bar Development, and Splices

The anchorage, bar development, and splice requirements should conform to ACI 318 and to the requirements presented below. Since the development length is dependent on a number of factors such as concrete strength and bar position, function, size, type, spacing, and cover, the designer must indicate the length of embedment required for bar development on the contract drawings. For similar reasons, the drawings should show the splice lengths and special requirements such as staggering of splices, etc. The construction specifications should be carefully edited to assure that they agree with reinforcement details shown on the drawings.

2-4. Hooks and Bends

Hooks and bends should be in accordance with ACI 318.

2-5. Bar Spacing

a. Minimum. The clear distance between parallel bars should not be less than 1-1/2 times the nominal diameter of the bars nor less than 1-1/2 times the maximum size of coarse aggregate. No. 14 and No. 18 bars should not be spaced closer than 6 and 8 inches, respectively, center to center. When parallel reinforcement is placed in two or more layers, the clear distance between layers should not be less than 6 inches. In horizontal layers, the bars in the upper layers should be placed directly over the bars in the lower layers. In vertical layers, a similar orientation should be used. In construction of massive reinforced concrete structures, bars in a layer should be spaced 12 inches center-to-center wherever possible to facilitate construction.

b. Maximum. The maximum center-to-center spacing of both primary and secondary reinforcement should not exceed 18 inches.

2-6. Concrete Protection for Reinforcement

The minimum cover for reinforcement should conform to the dimensions shown below for the

Concrete Section	Minimum Clear Cover of Reinforcement (inches)
Unformed surfaces in contact with foundation	4
Formed or screeded surfaces subject to cavitation or abrasion erosion, such as baffle blocks and stilling basin slabs	6
Formed and screeded surfaces such as stilling basin walls, chute spillway slabs, and channel lining slabs on grade:	
Equal to or greater than 24 inches in thickness	4
Greater than 12 inches and less than 24 inches in thickness	3
Equal to or less than 12 inches in thickness will be in accordance with ACI Code 318.	

NOTE. In no case shall the cover be less than:
1.5 times the nominal maximum size of aggregate, or
2.5 times the maximum diameter of reinforcement.

multiplied by a hydraulic factor, H_f.

$$U_h = H_f(U) \qquad (3\text{-}2)$$

where $H_f = 1.3$ for hydraulic structures, except for members in direct tension. For members in direct tension, $H_f = 1.65$. Other values may be used subject to consultation with and approval by CECW-ED. Therefore, the required strength U_h to resist dead and live loads shall be at least equal to

$$U_h = 1.7H_f(D + L) \qquad (3\text{-}3)$$

An exception to the above occurs when resistance to the effects of wind or other forces that constitute short duration loads with low probability of occurrence are included in the design. For that case, the following loading combination should be used:

$$U_h = 0.75[1.7H_f(D + L)] \qquad (3\text{-}4)$$

b. Modified ACI 318 Building Code Method. The load factors prescribed in ACI 318 may be applied directly to hydraulic structures with two modifications. The load factor for lateral fluid pressure, F, should be taken as 1.7. The factored load combinations for total factored design load, U, as prescribed in ACI 318 shall be increased by the hydraulic factor $H_f = 1.3$, except for members in direct tension. For members in direct tension, $H_f = 1.65$.

The equations for required strength can be expressed as

$$U_h = 1.3U \qquad (3\text{-}5)$$

except for members in direct tension where

$$U_h = 1.65(U) \qquad (3\text{-}6)$$

For certain hydraulic structures such as U-frame locks and U-frame channels, the live load can have a relieving effect on the factored load combination used to determine the total factored load effects (shears, thrusts, and moments). In this case, the combination of factored dead and live loads with a live load factor of unity should be investigated and reported in the design documents.

c. Earthquake effects. If a resistance to specified earthquake loads or forces, E, are included, the following combinations shall apply.

(1) Unusual

(a) Nonsite-specific ground motion design earthquake (OBE)

$$U_h = 1.7(D + L) + 1.9E \qquad (3\text{-}7)$$

(b) Site-specific ground motion for design earthquake with time-history and response spectrum analysis (OBE)

$$U_h = 1.4(D + L) + 1.5E \qquad (3\text{-}8)$$

(2) Extreme

(a) Nonsite-specific ground motion (MCE)

$$U_h = 1.1(D + L) + 1.25E \qquad (3\text{-}9)$$

(b) Site-specific ground motion (MCE)

$$U_h = 1.0(D + L + E) \qquad (3\text{-}10)$$

d. Nonhydraulic structures. Reinforced concrete structures and structural members that are not classified as hydraulic shall be designed with the above guidance, except that the hydraulic factor shall not be used.

3-4. Design Strength of Reinforcement

a. Design should normally be based on 60,000 psi, the yield strength of ASTM Grade 60 reinforcement. Other grades may be used, subject to the provisions of paragraphs 2-2 and 3-4.b. The yield strength used in the design shall be indicated on the drawings.

b. Reinforcement with a yield strength in excess of 60,000 psi shall not be used unless a detailed investigation of ductility and serviceability requirements is conducted in consultation with and approved by CECW-ED.

3-5. Maximum Tension Reinforcement

a. For singly-reinforced flexural members, and for members subject to combined flexure and compressive axial load when the axial load strength ϕP_n is less than the smaller of $0.10f'_cA_g$ or ϕP_b, the ratio of tension reinforcement ρ provided shall conform to the following.

(1) Recommended limit = 0.25 ρ_b.

(2) Maximum permitted upper limit not requiring special study or investigation = 0.375 ρ_b. Values above 0.375 ρ_b will require consideration of serviceability, constructibility, and economy.

Φ GEI Consultants, Inc.

Client: LEA
Project: Allendale Dam
Subject: Stability

Project No.: 01179
Date: 7/01 By: MPW
Chkd: 7/01 By: JAS

$l_e := 24 \cdot in \cdot 2 - 4 \cdot in$ deduct the diameter of the anchor from the projected area calculation

$A_p := h \cdot l_e$ $A_p = 9.2 ft^2$ Pb 2-15 & 2-16

$V_n := 4 \cdot \sqrt{\frac{fc}{psi}} \cdot psi \cdot A_p$ $V_n = 373.4 kip$ greater than $LF \cdot P_{anc} = 204.4 kip$

Note the actual lateral component of the anchor clamping force will be equal to Panc times a coefficient of friction. Hence the lateral component that must be resisted by the shear capacity of the beam is always less than the clamping force. **Okay by inspection.**

Check Bearing capacity at plate.

$\phi_{hole} := 3.5 \cdot in$ assume hole in plate is $\phi_p := 4 \cdot in$ $b_p := 8 \cdot in$

$A_{hole} := \pi \cdot \frac{\phi_p^2}{4}$ $A_{hole} = 12.6 in^2$ $A_{plate} := b_p^2$ $A_{plate} = 64.0 in^2$

$\sigma_{all} := 0.3 \cdot fc$ ACI allowable stress design $(A_{plate} - A_{hole}) \cdot \sigma_{all} = 77.2 kip$

allowing an increase of 2 on area per ACI

$(2 \cdot A_{plate} - A_{hole}) \cdot \sigma_{all} = 173.2 kip$

Bearing plate is okay

See wall design calculations in section 3 for additional design of the footing and wall.

tensile stress component. (c) The bearing area of the anchor head is approximately evenly distributed around the perimeter of the tensile stress component.

B.5 — Anchorage requirements

B.5.1 — Anchorage design shall be controlled by the strength of embedment steel unless otherwise specified in this appendix.

B.5.1.1 — Tension

Steel strength controls when the design pullout strength of the concrete P_d as determined in Section B.4.2 exceeds the minimum specified tensile strength of the tensile stress component (based on f_{ut}) of the embedment steel, and full load transfer is accomplished from steel to concrete within the depth of the anchorage by one of the following methods:

(a) An anchor head at the base of the tensile stress components which satisfies the requirements of Section B.4.5.2. To prevent failure due to lateral bursting forces at anchor heads, the minimum edge distance m shall be determined such that the lateral concrete design strength (based on a uniform tensile stress of $4\phi\sqrt{f_c'}$ acting on an effective area, including overlapping stress cones, defined by projecting a 45 deg cone from the anchor head to the free surface) exceeds the lateral bursting force unless the requirements of Section B.4.4 are met. The ϕ factor shall be taken as 0.85.

(b) Reinforcing bars with development lengths in accordance with the requirements of Chapter 12, for anchor steel composed of reinforcement.

B.5.1.2 — Shear

B.5.1.2.1—Bolts, Studs, or Bars

Bolts, studs, or bars shall meet the requirements of B.5.1.1. The minimum edge distance m for shear loading towards a free edge shall be such that the concrete design strength (based on a uniform tensile stress of $4\phi\sqrt{f_c'}$ acting on an effective area defined by projecting a 45 deg half-cone to the free surface from the centerline tensile stress component at the shearing place) exceeds the ultimate shear strength of the bolts, studs, or bars (based on f_{ut}).

B.5.1.2.2 — Shear Lugs

(a) Shear lugs shall be considered effective only when located in a concrete compression zone developed between the embedment and the concrete and transverse to the direction of the shear force for a given load combination.

(b) When multiple shear lugs are used to establish the design shear strength in a given direction, the magnitude of the alloted shear to each lug shall be in direct proportion to the total shear, the number of lugs, and the shear stiffness of each lug.

(c) For shear lugs bearing in the direction of a free edge, the concrete design shear strength for each lug shall be determined based on a uniform tensile stress of $4\phi\sqrt{f_c'}$ acting on an effective stress area defined by projecting a 45 deg plane from the bearing edges of the shear lug to the free surface unless the requirements of Section B.4.4 are met. Bearing area of the shear lug shall be excluded from the projected area. The ϕ factor shall be taken as 0.85.

(d) When multiple shear lugs are used to establish design shear strength in a given direction, the face-to-face dimension between shear lugs shall not be less than that $0.07\,h\sqrt{f_c'}$ where h is the lug depth.

B.5.1.3 — For combined tension and shear, the depth of embedment shall be in accordance with Section B.5.1.1 and the minimum edge distance in accordance with Section B.5.1.2.1.

B.5.1.4—Where reinforcement is provided in accordance with Section B.4.4, the minimum edge distance shall not be less than one-third that required by Section B.5.1.2. The reinforcement shall also satisfy the concrete cover requirements in Section 7.7 of this Code.

B.6 — Design requirements for embedment steel

B.6.1—Embedment material shall be defined by the Engineer in the contract documents. The design yield strength f_y shall not exceed 120,000 psi.

B.6.2 — The design strength for embedments shall be based on a maximum steel stress of ϕf_y. The following values for ϕ shall be used:

B.6.2.1 — Tension, compression, and bending

B.6.2.1.1 — Tension $\phi = 0.9$. Design tensile strength shall be ϕf_y or $0.8\,f_{ut}$, whichever is less.

B.6.2.1.2 — Compression and bending $\phi = 0.9$.

B.6.2.2 — Shear

B.6.2.2.1 — Structural shapes and fabricated steel sections and shear lugs

$\phi = 0.55$.

B.6.2.2.2 — The shear-friction provisions of Section 11.7 of this Code (as modified in this section) shall be applied to bolts, studs, and bars using ϕ of 0.85.

The coefficient of friction μ shall be as follows:

(a) 0.9 for concrete or grout against as-rolled steel with the contact plane a full plate thickness below the concrete surface.

(b) 0.7 for concrete or grout against as-rolled steel with contact plane coincidental with the concrete surface.

2-16

0.55 for grouted conditions with the contact between grout and as-rolled steel exterior to concrete surface.

— Combined tension and shear

— For structural shapes and fabricated steel sections, the web shall be designed for the shear and the flanges designed for the tension, compression, and bending.

B.6.3.2 — For bolts, studs, and bars, the area of steel required for tension by Section B.6.2.1 and shear by Section B.6.2.2 shall be considered additive.

B.6.4 —The tensile stress area of a threaded part shall be taken as:

$$0.7854 \left[D - \frac{0.9743}{n} \right]^2$$

where D is the basic major diameter of the threaded part and n is the number of threads per in.

B.6.5—The tensile stress area of Section B.6.4 shall be applied to all theaded parts subject to direct tensile and shear stress.

B.6.6—Materials for tensile stress components that incorporate a reduced section shall have properties such that the tensile strength of the reduced section is greater than the yield strength of the unreduced section.

B.7 — Expansion anchors

This section provides minimum requirements for the design of typical expansion anchors used in concrete structures and does not restrict the use of other expansion anchors provided the expansion anchors are designed and tested in accordance with the requirements of this section.

B.7.1 — Design requirements

Expansion anchors shall be designed to assure that the design strength of concrete for a given expansion anchor or group of expansion anchors is greater than the strength of the anchor steel except as permitted in Section B.7.2. This requirement shall be met by satisfying the requirements of Sections B.7.1.1 or B.7.1.2.

B.7.1.1 — Design by analysis

(a) Tension: The design pullout strength of concrete P_d shall be as defined in Section B.4.2 except that the effective stress area shall be defined by the projected area of the stress cone radiating toward the concrete surface from the innermost expansion contact surface between the expansion anchor and the drilled hole. Refer to Fig. B.7-1 for typical details. The design pullout strength of concrete shall be equal to or greater than the minimum specified tensile strength or average tensile strength if a minimum is not defined for the expansion anchor. The minimum edge distance shall be in accordance with the requirement of Section B.5.1.1(a).

(b) Shear: Expansion anchors subject to shear shall

(c) For combined tension and shear, the depth of embedment shall be in accordance with Section B.7.1.1(a) and the minimum edge distance in accordance with Section B.7.1.1(b).

(d) The Design requirements for embedment steel shall be in accordance with Section B.6.0.

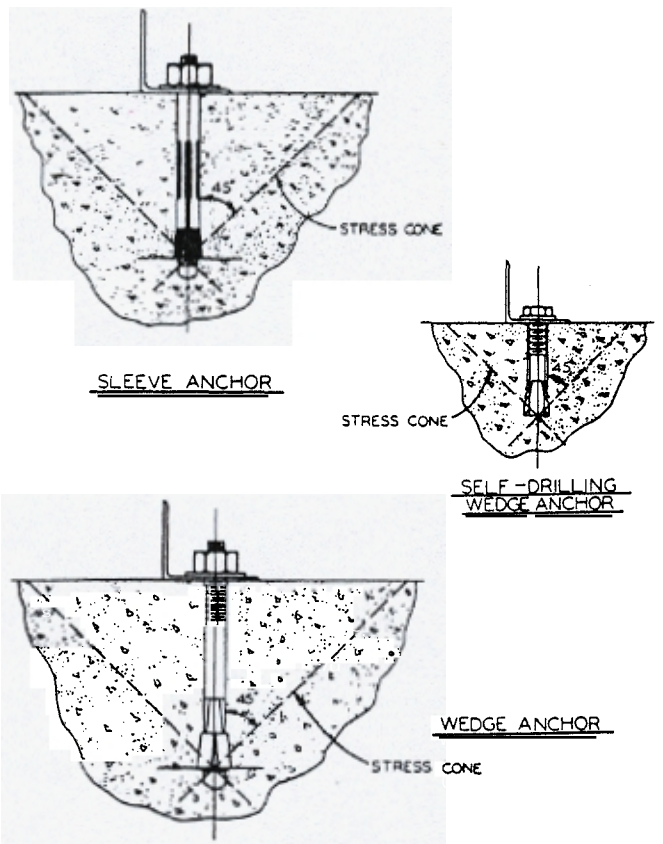

Fig. B.7-1—Typical details of expansion anchors

B.7.1.2 — Design by testing

Tests shall be conducted to verify that the concrete will develop the steel strength of the expansion anchor. Design by test results shall be restricted to tests that are representative of the anchor spacing and load application.

B.7.1.3 — Strength reduction factors

The requirements of Section B.6 shall apply except that the ϕ factors for expansion anchors shall be 0.9 times the values specified in Section B.6.2.

B.7.2 — Alternative design requirements

For expansion anchors that do not meet the requirement of Section B.7.1, the design strength shall be 0.33 times the average tension and shear test failure loads. The average test failure load shall be equal to the average of the test loads carried by test anchors at failure (maximum load) or at a magnitude of displace-

TURKEY IN WHEATWRAP

GEI Consultants, Inc.

Project 01179 Page

Client LEA Date By

Subject ALLENDALE DAM Checked By

Index Approved By

Section 3: Reinforced Concrete Design

Subject	Pages
Stem Design	1-5
Footing Design	6-8
Minimum Steel Requirements	9

Φ GEI Consultants, Inc.

Project No.: 01179
~~Date:~~ 4/1 By: MPW

Client: LEA
Project: Allendale Dam
Subject: Stability

Chkd: _____ By: _____

Design stem of wall for Load Case 1 - Normal Pool

The same loadings are used to design the stem as were used to evaluate stability except that the pressure envelopes stop at the toe of the wall rather than the toe of footing. See page 1-11 for geometry.

$El_{toe} = 80.5\,ft$ Elevation at toe of wall

Headwater Elevation $= El_{hw} := 93.5 \cdot ft$ (upstream)

Tailwater Elevation $: El_{tail} := 82.0 \cdot ft$ (downstream)

$\gamma_c = 150.0\,pcf \quad \gamma_w = 62.4\,pcf \quad \gamma_t = 125.0\,pcf \quad K_a = 0.32$

Compute Soil and Water Pressures

Depth of Tailwater $hw_{tail} := (El_{tail} - El_{toe}) \quad hw_{tail} = 1.5\,ft$

Depth of Headwater $= hw_{head} := (El_{hw} - El_{toe}) \quad hw_{head} = 13.0\,ft$

Depth of Soil $= h_s := El_{top} - El_{toe} \quad h_s = 13.0\,ft$

$p_{w1} := \gamma_w \cdot hw_{tail} \quad p_{w1} = 93.6\,psf$

$p_{w2} := \gamma_w \cdot hw_{head} \quad p_{w2} = 811.2\,psf$

$p_s := K_a \cdot (\gamma_t - \gamma_w) \cdot h_s \quad p_s = 262.1\,psf$

Compute Resultant Forces

Wall Geometry Toe Width $= w_{bot} = 2.5\,ft$ Top Width $= w_{top} = 2.0\,ft$ Height $= h_{wall} = 13.0\,ft$

$R_{w1} := \frac{1}{2} \cdot hw_{tail} \cdot p_{w1} \quad R_{w1} = 70.2\,plf$

$R_{w2} := \frac{1}{2} \cdot hw_{head} \cdot p_{w2} \quad R_{w2} = 5272.8\,plf$

$R_s := \frac{1}{2} \cdot h_s \cdot p_s \quad R_s = 1703.5\,plf$

Compute Moment Arm about Base of Wall

$y_{w1} := \frac{1}{3} \cdot hw_{tail} \quad y_{w1} = 0.5\,ft$

$y_{w2} := \frac{1}{3} \cdot hw_{head} \quad y_{w2} = 4.3\,ft$

$y_s := \frac{1}{3} \cdot h_s \quad y_s = 4.3\,ft$

$V_1 := R_{w2} + R_s - R_{w1} \quad M_1 := R_{w2} \cdot y_{w2} + R_s \cdot y_s - R_{w1} \cdot y_{w1}$

$V_1 = 6.9\,klf \quad M_1 = 30.2\,kip \cdot \frac{ft}{ft}$

Φ GEI Consultants, Inc.

Project No.: 01179
Date: 7/1 By: MPU

Client: LEA
Project: Allendale Dam
Subject: Stability

Chkd: _____ By: _____

Stem Design for Load Case 2 - 100 yr Flood See page 1-16 for free body from stability calcs.

Headwater Elevation = $El_{hw} := 97.1 \cdot ft$ (upstream)

Tailwater Elevation : $El_{tail} := 88.9 \cdot ft$ (downstream)

Compute Soil and Water Pressures

Depth of Tailwater $hw_{tail} := (El_{tail} - El_{toe})$ $hw_{tail} = 8.4\,ft$

Depth of Headwater = $hw_{head} := (El_{hw} - El_{toe})$ $hw_{head} = 16.6\,ft$

Depth of Soil = $h_s := El_{top} - El_{toe}$ $h_s = 13.0\,ft$

$p_{w1} := \gamma_w \cdot hw_{tail}$ $p_{w1} = 524.2\,psf$

$p_{w2} := \gamma_w \cdot hw_{head}$ $p_{w2} = 1035.8\,psf$

$p_s := K_a \cdot (\gamma_t - \gamma_w) \cdot h_s$ $p_s = 262.1\,psf$

Compute Resultant Forces

Wall Geometry Toe Width = $w_{bot} = 2.5\,ft$ Top Width = $w_{top} = 2.0\,ft$ Height = $h_{wall} = 13.0\,ft$

$R_{w1} := \frac{1}{2} \cdot hw_{tail} \cdot p_{w1}$ $R_{w1} = 2201.5\,plf$

$R_{w2} := \frac{1}{2} \cdot hw_{head} \cdot p_{w2}$ $R_{w2} = 8597.5\,plf$

$R_s := \frac{1}{2} \cdot h_s \cdot p_s$ $R_s = 1703.5\,plf$

Compute Moment Arm about Base of Wall

$y_{w1} := \frac{1}{3} \cdot hw_{tail}$ $y_{w1} = 2.8\,ft$

$y_{w2} := \frac{1}{3} \cdot hw_{head}$ $y_{w2} = 5.5\,ft$

$y_s := \frac{1}{3} \cdot h_s$ $y_s = 4.3\,ft$

$V_2 := R_{w2} + R_s - R_{w1}$ $M_2 := R_{w2} \cdot y_{w2} + R_s \cdot y_s - R_{w1} \cdot y_{w1}$

$V_2 = 8.1\,klf$ $M_2 = 48.8\,kip \cdot \frac{ft}{ft}$

Φ GEI Consultants, Inc.

Client: LEA
Project: Allendale Dam
Subject: Stability

Project No.: 01179
Date: 7/1 By: MW
Chkd: _____ By: _____

Stem Design for Load Case 3 - Normal Pool + EQ

See page 1-28 for free body from stability calcs.

Use values from Case 1 with dynamic forces added. $V_1 = 6.9\frac{1}{ft}kip$ $M_1 = 30.2kip\cdot\frac{ft}{ft}$

Dynamic Forces

Use acceleration coefficients form Algermision

$\alpha_a := 0.34\ g$ $k_h := \alpha_a$ $k_v := 0.1\cdot k_h$

Soil Pressures

$\phi := 30\cdot deg$ $\theta = 2.2deg$ $\beta := 0deg$ $\psi := atan\left(\frac{k_h}{1-k_v}\right)$ $\psi = 19.4deg$ $\delta = 0.0$

$$K_{ae} := \frac{\cos(\phi-\psi-\theta)^2}{\cos(\psi)\cdot\cos(\theta)^2\cdot\cos(\psi+\theta+\delta)\cdot\left(1+\sqrt{\frac{\sin(\phi+\delta)\cdot\sin(\phi-\psi-\beta)}{\cos(\beta-\theta)\cdot\cos(\psi+\theta+\delta)}}\right)^2} \quad K_{ae} = 0.6$$

for soils the dynamic loads are

$P_{ea} := K_{ae}\cdot\frac{h_s^2}{2}\cdot(\gamma_t-\gamma_w)$ $P_{ea} = 3.4klf$

$P_{es} := P_{ea} - R_s$ $M_{es} := \frac{2}{3}\cdot P_{es}\cdot h_s$ $P_{es} = 1.7klf$ $M_{es} = 14.9kip\cdot\frac{ft}{ft}$

Use westergards formula for dynamic water forces $C_e := 0.051\frac{kip}{ft^3}$

$P_{ew} := \frac{2}{3}\cdot C_e\cdot k_h\cdot hw_{head}^2$ $P_{ew} = 2.0klf$

$M_{ew} := 0.6hw_{head}\cdot P_{ew}$ $M_{ew} = 15.2ftklf$

Inertial Forces

$W_1 := 3.9\cdot klf$ $x_{W1} := \frac{h_s}{2}$ $W_2 := 0.5\cdot klf$ $x_{W2} := \frac{1}{3}\cdot h_s$ $W_{soilup} := 1.6\cdot klf$ $x_{Wsoilup} := \frac{h_s}{2}$

$P_i := k_h\cdot(W_1+W_2+W_{soilup})\cdot(1-k_v)$ $P_i = 2.0klf$

$M_i := k_h\cdot(W_1\cdot x_{W1}+W_2\cdot x_{W2}+W_{soilup}\cdot x_{Wsoilup})$ $M_i = 12.9kip\cdot\frac{ft}{ft}$

Total Earthquake

$M_{eq} := M_{ew}+M_{es}+M_i$ $P_{eq} := P_{es}+P_{ew}+P_i$ $M_{eq} = 43.0kip\cdot\frac{ft}{ft}$ $P_{eq} = 5.6klf$

Total Loads $M_3 := M_1 + M_{eq}$ $M_3 = 73.2kip\cdot\frac{ft}{ft}$ $V_3 := V_1 + P_{eq}$ $V_3 = 12.5klf$

Φ GEI Consultants, Inc.

Client: LEA
Project: Allendale Dam
Subject: Stability

Project No.: 01179
Date: 7/1 By: MPW

Chkd: _____ By: _____

Design Wall

The acceleration coefficient for this design is based on USGS maps and does not fall within the USCOE Guidelines The original design, using a lower eq acceleration used load factors of 1.1 D+L +1.25 Eq factor loads and design fc the worst case. For case 1 and 2 use 1.7*1.3*(D+L)

$LF := 1.7 \cdot 1.3$

$LF \cdot V_1 = 15.3\,klf$ $\quad LF \cdot V_2 = 17.9\,klf$ $\quad 1.1 \cdot V_1 + 1.25 \cdot P_{eq} = 14.6\,klf$

Design for $V_u := LF \cdot V_2$ $\quad V_u = 17.9\,klf$

$LF \cdot M_1 = 66.7\,kip \cdot \frac{ft}{ft}$ $\quad LF \cdot M_2 = 107.8\,kip \cdot \frac{ft}{ft}$ $\quad 1.1 \cdot M_1 + 1.25 \cdot M_{eq} = 87.0\,kip \cdot \frac{ft}{ft}$

Design for $M_u := LF \cdot M_2$ $\quad M_u = 107.8\,kip \cdot \frac{ft}{ft}$

Beam Depth $\quad h := 30 \cdot in$ $\quad bw := 1 \cdot ft$

From table 2-6 (see attached) $\quad clr := 4 \cdot in$

Assume reinforcing at 12 inches o.c. and slightly larger than the original design. (#8@12)

$d_{b9} = 1.1\,in$ $\quad A_9 = 1.0\,in^2$

For inside face $\quad d := h - \frac{d_{b8}}{2} - clr$ $\quad d = 25.5\,in$

f'c for concrete (psi) $\quad fc := 5000 \cdot psi$ $\quad f_y := 60 \cdot ksi$

Use load factor combining hydraulic and live of

phi $\quad \phi := .9$ Bending

$\phi_s := 0.85$ Shear

Find shear capacity of beam

$V_c := \left(2 \cdot \sqrt{\frac{fc}{psi}} \cdot bw \cdot d\right) \cdot psi$ $\quad V_c = 43274.9\,lb$ $\quad V_n := V_c$

$\phi_s \cdot V_n = 36.8\,kip$ Greater than the shear in the beam of $V_u = 17.9 \frac{1}{ft}\,kip$ **SHEAR OKAY**

Find Moment Capacity of Beam

$A_{s1} := A_9$

Find Moment Capacity of Wall $\quad \rho := \frac{A_{s1}}{bw \cdot d}$ $\quad d = 2.1\,ft$ $\quad bw = 1.0\,ft$

$M_n := \rho \cdot f_y \cdot bw \cdot d^2 \cdot \left(1 - \frac{\rho \cdot f_y}{1.7 \cdot fc}\right)$

$\phi \cdot M_n = 112.1\,kip \cdot ft$ Greater than the Moment in the beam of $M_u = 107.8\,kip$ **MOMENT OKAY**

NED FORM 223
27 Sept 49

NEW ENGLAND DIVISION
CORPS OF ENGINEERS, U.S. ARMY

SUBJECT Allendale Dam
COMPUTATION Loading on Concrete Section
COMPUTED BY M Welsh CHECKED BY LB DATE 12/5/95

Load Factors: (1.3)(1.7)(D+L) 3-~~4~~

or 1.1(D+L) + 1.25(E)

STEM

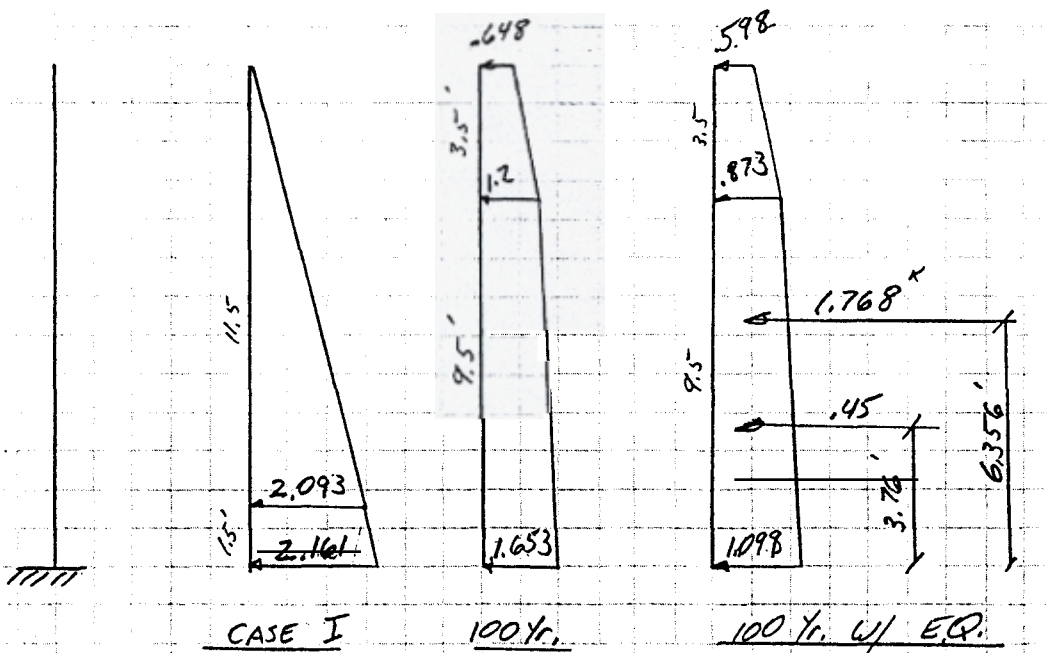

	Load	Moment Arm	Moment	
Case I	12.035 K	5.33'	64.19 ft-K	V = 15.54 K
	3.14 K	.75'	2.36	M = 66.58 ft-K
	.05 K	.5'	.026	
100 Yr.	8.424 K	6.5'	54.76 ft-K	V = 22.94 K
	.966 K	10.67'	10.3	M = 125.72 ft-K
	11.4 K (5.24 K)	4.75'	54.15 (24.89)	
	2.15 K	3.17	6.51	
100 Yr + EQ	7.774 K	6.5'	50.53 ft-K	V = 19.84
	.481 K	10.67'	5.135	M = 111.39
	8.294	4.75'	39.396 ft-K	
	1.074	3.17'	3.403 ft-K	
	1.768	6.36'	11.24	
	.45	3.76'	1.69 ft-K	

Design Footing for Loads from Stem

The moment in the heel will be applied at the stem and resisted by the toe in bearing and the anchor in tension.

From Page 1-13 $e_{01} := 2.6 \cdot ft$ $\sigma_{b1} := 2.7 \cdot tsf$ $T_1 := 15.5 \cdot klf$

From Page 1-18 $e_{02} := 1.9 \cdot ft$ $\sigma_{b2} := 3.9 \cdot tsf$ $T_2 := 18.5 \cdot klf$

From Page 1-26 $e_{03} := 0.6 \cdot ft$ $\sigma_{b3} := 12.9 \cdot tsf$ $T_3 := 18.5 \cdot klf$

From Page 3-4 $M_{ustem} := 107.8 \cdot kip \cdot \frac{ft}{ft}$

From attached page 3-7 the maximum moment to be resisted by the footing is

$M_{ustem} = 107.8 kip \cdot \frac{ft}{ft}$

The footing depth is the same as the stem use the same reinforcing.

$L_f := 7 \cdot ft$ length of footing

For shear check the toe and heel for the 100 year flood first.

$e_{02} = 1.9 ft$ $L_f - 3 \cdot e_{02} = 1.3 ft$ of heel is in tension supporting soil above $h_{soil} := (93.5 - 80.5) \cdot ft$

$w_{soil} := \gamma_b \cdot h_{soil} \cdot 1.5 \cdot ft$ $w_{soil} = 1.2 klf$

$w_{conc} := 150 \cdot pcf \cdot 2.5 \cdot ft \cdot 1.5 \cdot ft$ $w_{soil} + w_{conc} = 1.8 klf$ trivial load no need to check again

at toe the pressure is

$\sigma_{b2} = 7.8 \frac{klf}{ft}$ $\sigma_d := \sigma_{b2} \cdot \frac{(3 \cdot e_{02} - 1.5 \cdot ft)}{3 \cdot e_{02}}$ $\sigma_d = 5.7 ksf$

$V_{toe} := \frac{\sigma_{b2} + \sigma_d}{2} \cdot 1.5 \cdot ft$ $V_{toe} = 10.2 klf$

for earthquake

$V_{toe3} := \sigma_{b3} \cdot \frac{e_{03}^2}{2}$ $V_{toe3} = 4.6 ft klf$

for normal load

$\sigma_{b1} = 5.4 \frac{klf}{ft}$ $\sigma_d := \sigma_{b1} \cdot \frac{(3 \cdot e_{01} - 1.5 \cdot ft)}{3 \cdot e_{01}}$ $\sigma_d = 4.4 ksf$

$V_{toe} := \frac{\sigma_{b1} + \sigma_d}{2} \cdot 1.5 \cdot ft$ $V_{toe} = 7.3 klf$

from page 3-4 $\phi_s \cdot V_n = 36.8 klf$ shear in toe is okay by comparison

GEI Consultants, Inc.

		Project 01179	Page 3-7
Client	LEA	Date 7/01	By MPN
Subject	ALLENDALE	Checked	By
		Approved	By

FREE BODY DIAGRAM OF FOOTING

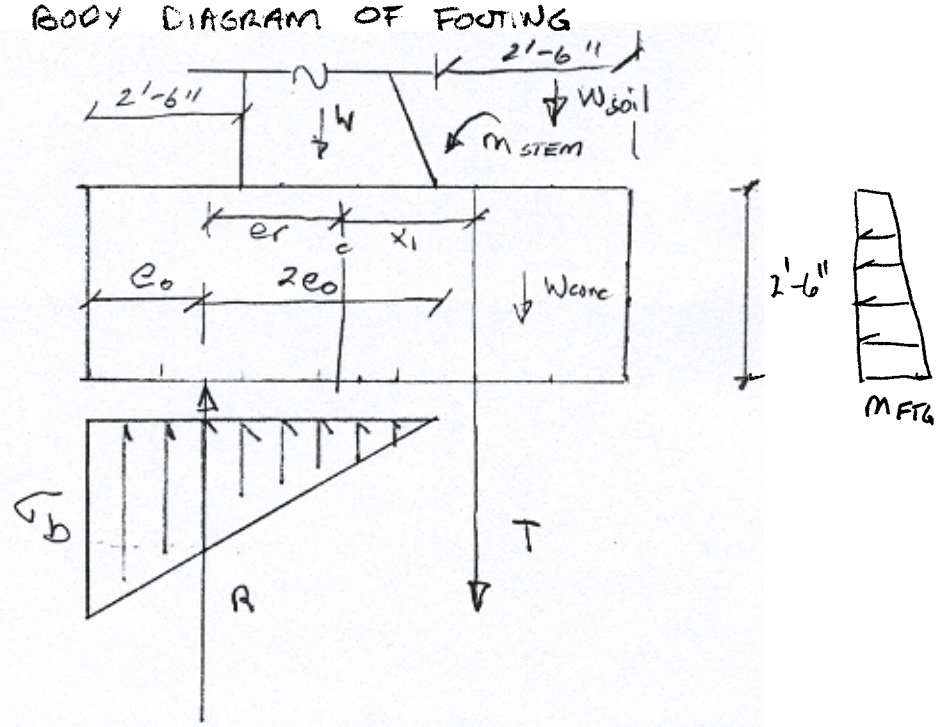

$M_{MAX} = M_{STEM}$

$(M_{STEM} = R e_R + T x_T + W_{SOIL} \times_{SOIL} - M_{FTG})$

V_{MAX} - EVALUATED @ d/2 FROM FACE

$d = 25''$ (Pg 3-4) $d/2 \sim 12''$

EVALUATE AT HEEL & TOE A DISTANCE 1'-0" FROM FACE (SEE 3-8)

GEI Consultants, Inc.

Project	01179	Page	3-8
Client LEA	Date 7/01	By	MPW
Subject ALLENDALE	Checked	By	
	Approved	By	

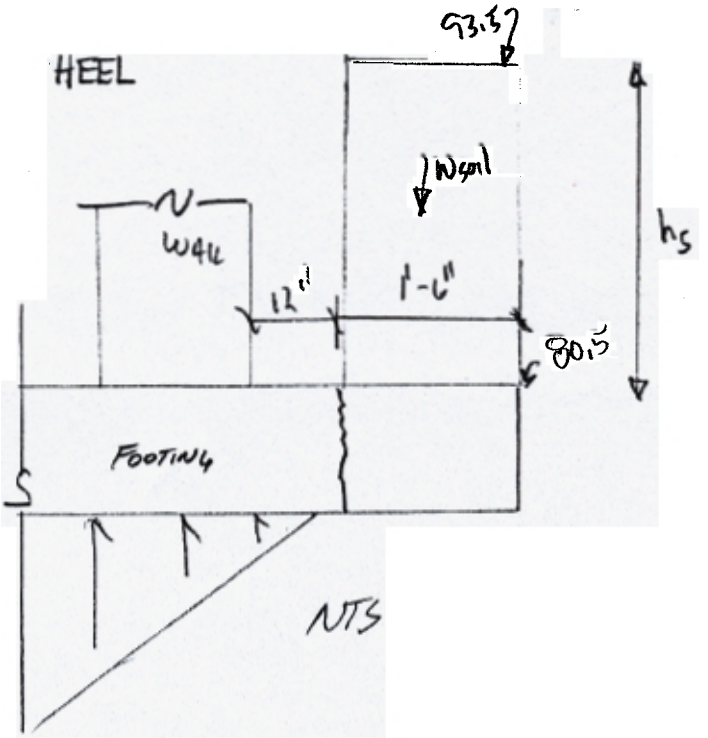

TOE

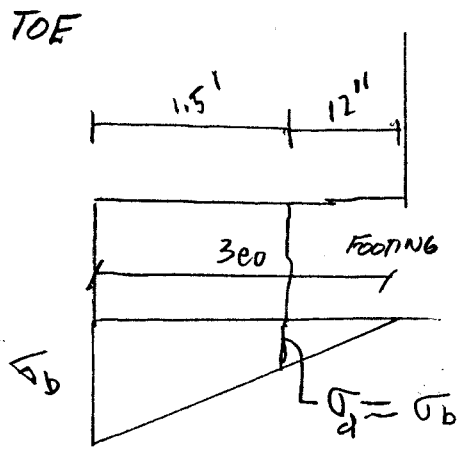

$$\sigma_a = \sigma_b \frac{(3e_o - 1.5')}{3e_o}$$

$V = \text{Avg } \sigma_b \,\&\, \sigma_a$

Φ GEI Consultants, Inc.

Project No.: 01179
Date: 07/01 By: 3-9 MPW

Client: LEA
Project: Allendale Dam
Subject: Stability

Chkd: _____ By: _____

Check minimum reinforcing:

ACI 318- Chapter 14 14.3 minimum reinforcing for walls. $bw := 12 \cdot in$ $h := 30 \cdot in$

Vert Min $0.0015 \cdot bw \cdot h = 0.5 in^2$ say #4 @ 6-inches min

Horitz Min $0.0025 \cdot bw \cdot h = 0.9 in^2$ say # 7 @ 12 inches

$A_7 = 0.6 in^2$

$A_4 = 0.2 in^2$

$A_9 = 1.0 in^2$

GEI Consultants, Inc.

Project 01179 Page

Client LEA Date By

Subject ALLENDALE DAM Checked By

Index Approved By

Section 4: Geotechnical Data

Subject	Pages
Review of Boring Data	1-22
Rock Data	23-33
Excavation Limits Downstream of Dam	34-36
Seepage Evaluation	37

GEI Consultants, Inc.

Project 01179 Page 4-1

Client LEA Date 7/01 By MPW

Subject ALLENDALE DAM Checked 7/21 By RLW

Geotechnical Data Approved By

Determine Geotechnical Properties for Analysis:
References:

[1] Building Officials and Code Administrators, International, Inc. (BOCA), 1988, National Building Code, 1988.

[2] Commonwealth of Massachusetts – The Massachusetts State Building Code (CMR 780), February, 1997.

[3] GEI Consultants, Inc., 2001, Hand Transcribed Boring Logs from EPA Borings, Centerdale, RI, July, 2001.

[4] International Technology Corporation, 1999. Hand written boring logs and boring location plan (provided by USACE under cover letter dated June 12, 2001), Logs dated July, 1999.

[5] Liao Associates, Inc., 1993. Geotechnical Engineering Report – Allendale Dam. N. Providence, RI (provided by USACE under cover letter dated June 12, 2001), February 1993.

[6] State of Rhode Island and Providence Plantations – Building Code Standards Committee, 1988. Rhode Island State Building Code, April 1, 1988.

[7] USACE (U.S. Army Corp of Engineers), 1995b. Design Calculations (Portions of original design provided by USACE under cover letter dated June 12, 2001), Calculations dated November and December, 1995.

[8] USGS, 1959. Geologic Quadrangle Maps of the United States, Bedrock Geolofy of the Providence Quadrangle, (Quinn), 1959.

Properties:

From [~~6~~] 7

Backfill behind wall $\gamma = 125$ pcf, $\phi = 30$ °. (page 2)
At rock interface $\phi = 30$ ° c = 10 psi. (page 3)

From [4]

Boring location plan (page 4)
Boring Logs (pages 5 – 10) SPT blow counts average in teens. Medium sand and gravel.
(see attached collection of correlations generated by GEI no ref pg 10A)

NED FORM 223
27 Sept 49

NEW ENGLAND DIVISION
CORPS OF ENGINEERS, U.S. ARMY

[6]

SUBJECT Allendale Dam
COMPUTATION Analyze "Garofalo" Design
COMPUTED BY M Welsh CHECKED BY LRD DATE 11/26/95

4-2

Case #1

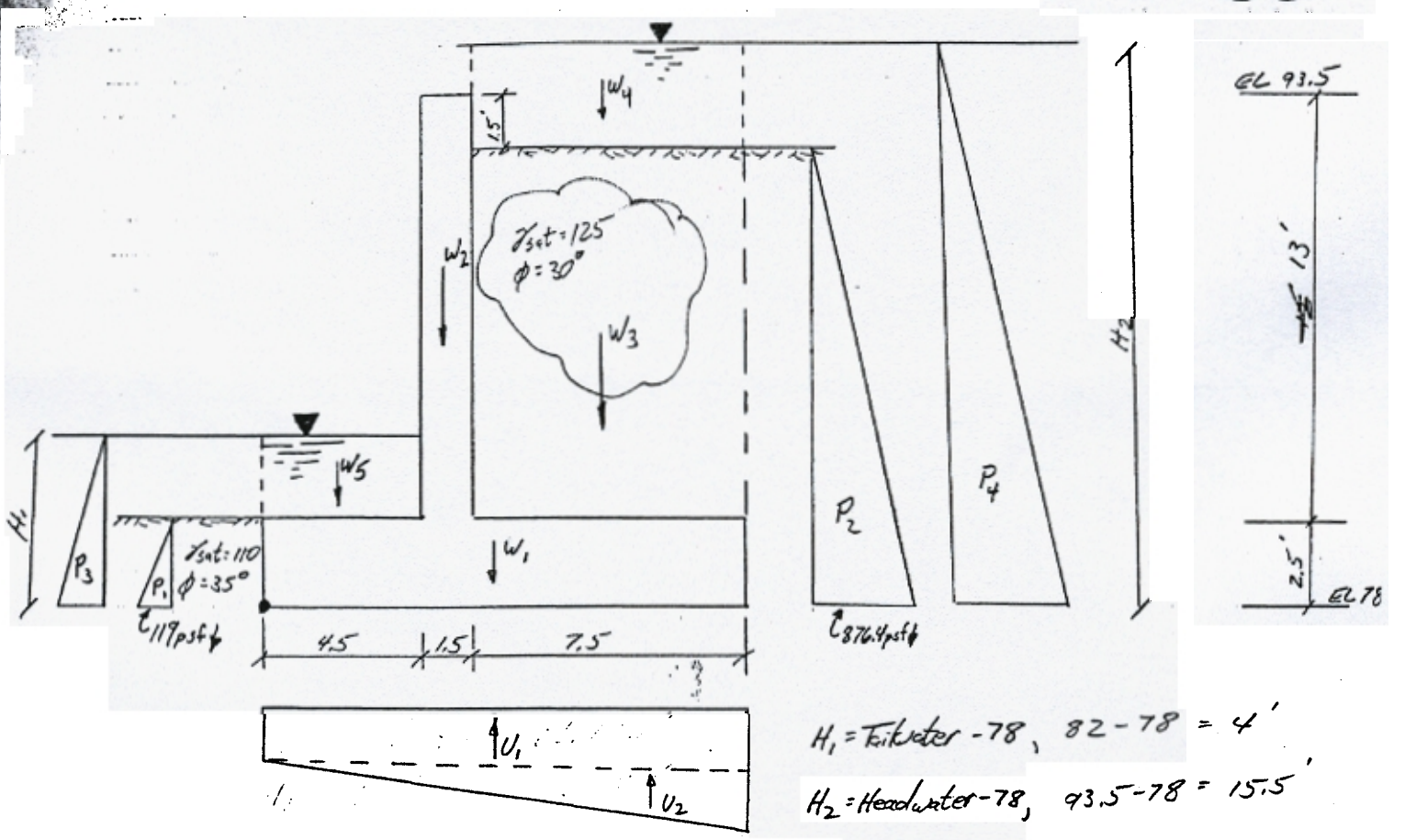

H_1 = Tailwater − 78, 82 − 78 = 4'

H_2 = Headwater − 78, 93.5 − 78 = 15.5'

Part	Load		Moment Arm	Moment
W_1	13.5 × 2.5 × .15 =	5.06 K ↓	6.75'	34.16 FK ↻
W_2	13 × 1.5 × .15 =	2.92 K ↓	5.25'	15.33 FK ↻
W_3	13 × 7.5 × .125 =	12.19 K ↓	9.75'	118.85 FK ↻
W_4	7.5 × 1.5 × .062 =	.7 K ↓	9.75'	6.82 ↻
W_5	1.5 × 4.5 × .062 =	.42 K ↓	2.25'	.94 ↻
P_1	3.69(.119)(2.5')/2 =	.55 K →	.83'	.46 Ft K ↻
P_2	.33(.876)(14')/2 =	2.04 K ←	4.67'	9.53 Ft-K ↺
P_3	.062 (4')²/2 =	.5 K →	1.33'	.67 ↻
P_4	.062(15.5')²/2 =	7.5 K ←	5.17'	38.77 ↺
U_1	4'(.062)13.5' =	3.34 K ↑	6.75'	22.54 ↺
U_2	(15.5 − 4)(.062)(13.5/2) =	4.84 K ↑	9'	43.56 ↺

Case I. Continued

Ref. - ETL 1110-2-256 (6/81) sliding stability for concrete structures
- EM 1110-2-2502 (9/89) Retaining and Flood Walls

$\Sigma V = 13.11^K \downarrow$

$\Sigma H = 8.49^K \leftarrow$

$\Sigma M_O = 114.4^{ft\text{-}K}$

$\Sigma M_R = 177.23^{ft\text{-}K}$

At interface with rock, assume Concrete is weaker than the Rock. Assume $\phi = 30°$, $C = 10psi$ (1.440 KSF)

$\mu = \tan 30° = .577$

Sliding @ Interface:

$$F.S. = \frac{\Sigma V \mu + 13.5'(1.44\ KSF)}{\Sigma H} = \frac{(13.11)(.577) + 1.44(13.5')}{8.49} = \underline{3.18}\ OK$$

Overturning:

$$\text{Resultant "X" From Toe} = \frac{\Sigma M}{\Sigma V} = \frac{177.23 - 114.4}{13.11^K} = 4.79'$$

$$\frac{4.79'}{13.5'} = .355 > .333 \quad \therefore \underline{100\%} \text{ of Base is in Compression}$$

OK For Overturning

For Cases II & III

$\Sigma V = 20.17^K - (U_1 + U_2) + (W_4 + W_5)$

$\Sigma H = 1.49^K + P_4 - P_3$

$\Sigma M_R = 168.8 + (W_4 + W_5) - P_3$

$\Sigma M_O = 9.53 + (P_4 + U_1 + U_2)$

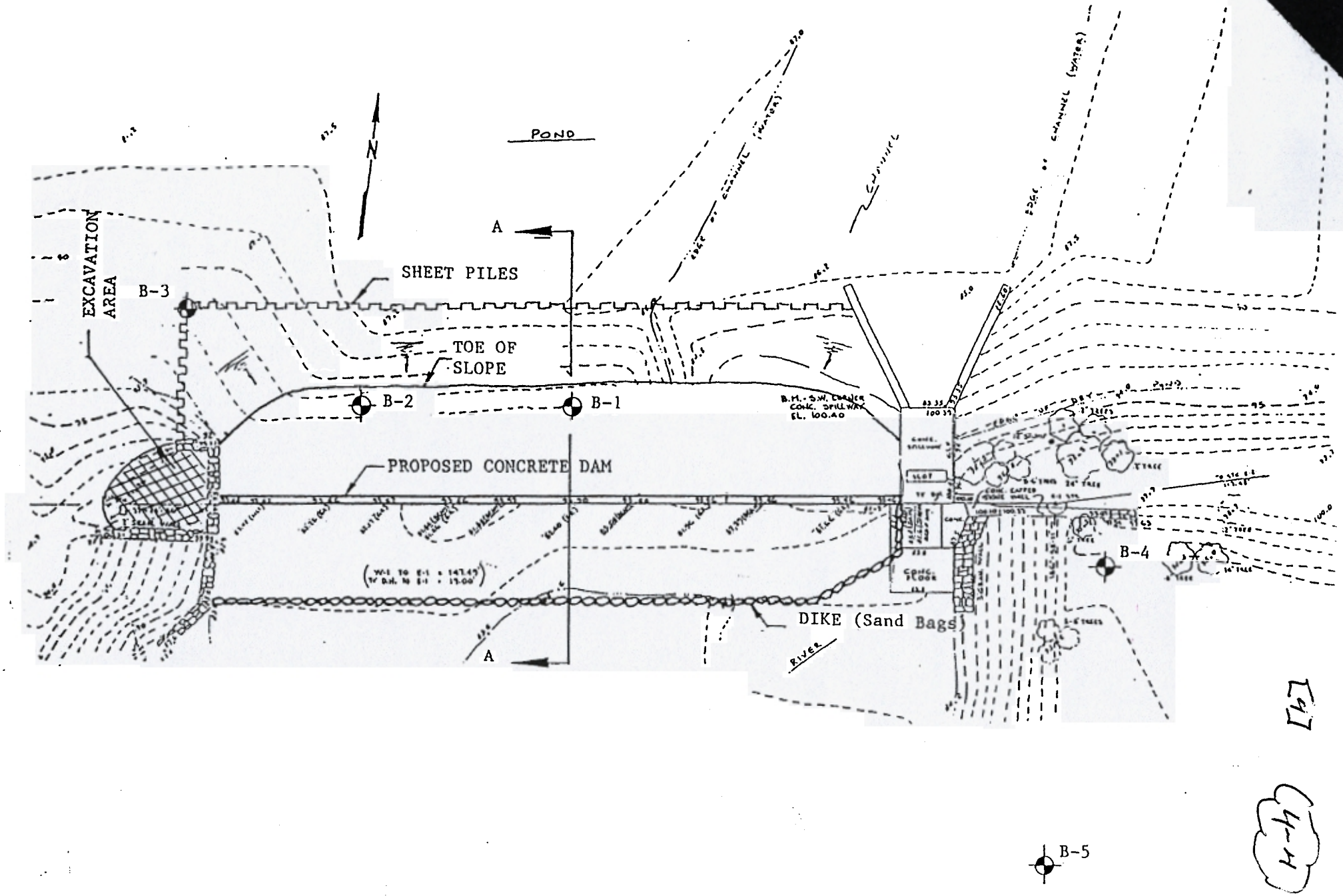

FIGURE 5 CONCEPTUAL LAYOUT FOR CONCRETE DAM CONSTRUCTION
Not to Scale

FIGURE 5

[4]
4-5

LIAO ASSOCIATES, INC.		TEST BORING REPORT	
PROJECT:	Allendale Dam	BORING NO.	B-1
LOCATION:	N. Providence, RI	PAGE 1 OF	1
DRILLING CONTRACTOR:	Enviro-Tech Drilling	DATE STARTED:	1/27/93
DRILLED BY:	Dan Bilezekian, Richard Canaezo	DATE FINISHED:	1/27/93
INSPECTED BY:	Mark Liao	SURFACE ELEVATION:	92.44'

GROUNDWATER OBSERVATIONS

DEPTH	CASING AT	STABILIZATION
6.0'		20 min.

	CASING	SAMPLER	CORE BAR
TYPE:	HSA	split spoon	
SIZE I.D.:	3 3/4"	1 3/8"	
HAMMER WT.:		140 lbs	
HAMMER FALL:		30 in.	

CASING BLOWS PER FOOT	SAMPLING DEPTH FROM - TO	TYPE OF SAMPLE	HAMMER BLOWS ON SAMPLER 0-6"	6-12"	12-18"	18-24"	STRATA CHANGE	DESCRIPTION OF MATERIALS	SAMPLE NO.	PEN. (in.)	REC. (in.)
	0 - 2'	spoon	7	8	14	16		FILL: Fine to coarse sand with gravel and cobbles, gray, medium dense, moist.	S-1	24	6
	2' - 4'	spoon	8	10	15	22			S-2	24	7
	4' - 6'	spoon	15	19	10	10	6'		S-3	24	2
	6' - 8'	spoon	5	5	5	5		FILL: Silty fine to coarse sand with gravel, brown, medium dense, wet.	S-4	24	8
	8' - 10'	spoon	5	5	6	5			S-5	24	7
	10' - 12'	spoon	5	22	15	21	12'-4"	Wood plank about 1" thick at about 11'.	S-6	24	2
							16'-4"	ROCK FORMATION: Schist Recovery Ratio Lr = 0.96 Rock Quality Designation RQD = 0.75			
								End of test boring			

GENERAL REMARKS: Coring Rates: 12'-4" to 13'-4" 9 min., 13'-4" to 14'-4" 7 min., 14'-4" to 15'-4" 9 min., 15'-4" to 16'-4" 9 min.

Note: The ground surface elevation is based on the plan prepared by Waterman Engineering Co. of E. Providence, RI dated on Dec. 1992.

[47]
4-6

LIAO ASSOCIATES, INC.		TEST BORING REPORT	
PROJECT:	Allendale Dam	BORING NO.	B-2
LOCATION:	N. Providence, RI	PAGE 1 OF	1
DRILLING CONTRACTOR:	Enviro-Tech Drilling	DATE STARTED:	1/27/93
DRILLED BY:	Dan Bilezekian, Richard Canaezo	DATE FINISHED:	1/28/93
INSPECTED BY:	Mark Liao	SURFACE ELEVATION:	91.60'

GROUNDWATER OBSERVATIONS

DEPTH	CASING AT	STABILIZATION
6.0'		20 min.

	CASING	SAMPLER	CORE BAR
TYPE:	HSA	split spoon	
SIZE I.D.:	3 3/4"	1 3/8"	
HAMMER WT.:		140 lbs	
HAMMER FALL:		30 in.	

CASING BLOWS PER FOOT	SAMPLING DEPTH FROM - TO	TYPE OF SAMPLE	HAMMER BLOWS ON SAMPLER 0-6"	6-12"	12-18"	18-24"	STRATA CHANGE	DESCRIPTION OF MATERIALS	SAMPLE NO.	PEN. (in.)	REC. (in.)
	0 - 2'	spoon	14	27	10	4		FILL: Silty fine to medium sand with some gravel, brown, medium dense to dense, moist. Color changed to gray at 4'.	S-1	24	6
	2' - 4'	spoon	15	16	19	10			S-2	24	12
	4' - 6'	spoon	13	13	15	9	6'		S-3	24	9
	6' - 8'	spoon	5	4	4	1		FILL: Silty fine to coarse sand with gravel, gray, loose, wet. Wood plank about 1" thick at about 10'.	S-4	24	2
	8' - 9'	spoon	1	1	4	15			S-5	12	1
	9' -11'	spoon	3	12	20	11			S-5a	24	1
							12'				
	11' - 13'	spoon	7	12	6	5	13'	SILTY SAND: Gray silty sand with gravel, medium dense, wet.	S-6	24	6
	13' - 13'	spoon	60/0"					ROCK FORMATION: Granite (a 16" boulder or thin rock layer) on schist.			
							17'-3"	13' to 15.5' Lr = 0.60, RQD = 0.52			
								15.5' to 17.25' Lr = 0.62, RQD=0.40			
								Loss of return water @ about 15'			
								End of test boring			

GENERAL REMARKS: Coring Rates: 13' to 14' 8 min., 14' to 15' 5 min., 15' to 15'-6" 2 min., 15'-6" to 16' -6" 5 min., 16'-6" to 17'-3" 6 min.

Note: The ground surface elevation is based on the plan prepared by Waterman Engineering Co. of E. Providence, RI dated on Dec. 1992.

LIAO ASSOCIATES, INC.

[4]
4-7

PROJECT:	Allendale Dam	BORING NO.	B-3
LOCATION:	N. Providence, RI	PAGE 1 OF	1
DRILLING CONTRACTOR:	Enviro-Tech Drilling	DATE STARTED:	1/28/93
DRILLED BY:	Dan Bilezekian, Richard Canaezo	DATE FINISHED:	1/28/93
INSPECTED BY:	Mark Liao	SURFACE ELEVATION:	91.48'

GROUNDWATER OBSERVATIONS

DEPTH	CASING AT	STABILIZATION
1.5'		20 min.

	CASING	SAMPLER	CORE BAR
TYPE:	HSA	split spoon	
SIZE I.D.:	3 3/4"	1 3/8"	
HAMMER WT.:		140 lbs	
HAMMER FALL:		30 in.	

CASING BLOWS PER FOOT	SAMPLING DEPTH FROM - TO	TYPE OF SAMPLE	HAMMER BLOWS ON SAMPLER 0-6"	6-12"	12-18"	18-24"	STRATA CHANGE	DESCRIPTION OF MATERIALS	SAMPLE NO.	PEN. (in.)	REC. (in.)
	0 - 2'	spoon	2	14	8	9		FILL: Silty fine to medium sand with gravel and cobbles, gray, medium dense, wet. Soil with organics, loose, from about 6' to 9'.	S-1	24	6
	2' - 4'	spoon	10	12	13	10			S-2	24	8
	4' - 6'	spoon	11	11	25	15			S-3	24	7
	6' - 8'	spoon	8	4	2	1	8'		S-4	24	4
	8' - 10'	spoon	1	3	10	10		SILTY SAND: Silty fine to medium sand with organics, brown, loose to med. dense, wet.	S-5	24	15
	10' - 11'	spoon	5	130			11'		S-6	24	1
								Refusal encountered at 11'-6".			

GENERAL REMARKS:

Note: The ground surface elevation is based on the plan prepared by Waterman Engineering Co. of E. Providence, RI dated on Dec. 1992.

[4]
4-8

LIAO ASSOCIATES, INC.		TEST BORING REPORT	
PROJECT:	Allendale Dam	BORING NO.	B-4
LOCATION:	N. Providence, RI	PAGE 1 OF	1
DRILLING CONTRACTOR:	Enviro-Tech Drilling	DATE STARTED:	1/29/93
DRILLED BY:	Dan Bilezekian, Richard Canaezo	DATE FINISHED:	1/29/93
INSPECTED BY:	Mark Liao	SURFACE ELEVATION:	93.18'

GROUNDWATER OBSERVATIONS

DEPTH	CASING AT	STABILIZATION
11.0'		20 min.

	CASING	SAMPLER	CORE BAR
TYPE:	HSA	split spoon	
SIZE I.D.:	3 3/4"	1 3/8"	
HAMMER WT.:		140 lbs	
HAMMER FALL:		30 in.	

CASING BLOWS PER FOOT	SAMPLING DEPTH FROM - TO	TYPE OF SAMPLE	HAMMER BLOWS ON SAMPLER 0-6"	6-12"	12-18"	18-24"	STRATA CHANGE	DESCRIPTION OF MATERIALS	SAMPLE NO.	PEN. (in.)	REC. (in.)
	0 - 2'	spoon	2	2	2			FILL: Silty fine to coarse sand with gravel, construction debris, loose to medium dense, dry to moist.	S-1	18	7
	2' - 4'	spoon	1	3	5	7			S-2	24	1
	4' - 6'	spoon	7	6	8	4			S-3	24	1
	6' - 8'	spoon	4	5	5	13			S-4	24	6
	8' - 10'	spoon	9	18	10	5	10'		S-5	24	6
	10' - 12'	spoon	3	12	8	12		SILTY SAND: Brown silty sand, medium dense, changing to gray rock fragments and coarse sand at 12'-5".	S-6	24	10
	12'-13.4'	spoon	28	32	100/5"		13' - 5"		S-7	17	8
								Refusal encountered at 13' - 5".			

GENERAL REMARKS:

Note: The ground surface elevation is based on the plan prepared by Waterman Engineering Co. of E. Providence, RI dated on Dec. 1992.

[4]
49

LIAO ASSOCIATES, INC.		TEST BORING REPORT	
PROJECT:	Allendale Dam	BORING NO.	B-5
LOCATION:	N. Providence, RI	PAGE 1 OF	1
DRILLING CONTRACTOR:	Enviro-Tech Drilling	DATE STARTED:	1/29/93
DRILLED BY:	Dan Bilezekian, Richard Canaezo	DATE FINISHED:	1/29/93
INSPECTED BY:	Mark Liao	SURFACE ELEVATION:	93.18'

GROUNDWATER OBSERVATIONS

DEPTH	CASING AT	STABILIZATION
11.0'		20 min.

	CASING	SAMPLER	CORE BAR
TYPE:	HSA	split spoon	
SIZE I.D.:	3 3/4"	1 3/8"	
HAMMER WT.:		140 lbs	
HAMMER FALL:		30 in.	

CASING BLOWS PER FOOT	SAMPLING DEPTH FROM - TO	TYPE OF SAMPLE	HAMMER BLOWS ON SAMPLER 0-6"	6-12"	12-18"	18-24"	STRATA CHANGE	DESCRIPTION OF MATERIALS	SAMPLE NO.	PEN. (in.)	REC. (in.)
	0 - 2'	spoon	2	2	2			FILL: Silty fine to coarse sand with gravel, construction debris, loose to medium dense, dry to moist.	S-1	18	7
	2' - 4'	spoon	1	3	5	7			S-2	24	1
	4' - 6'	spoon	7	6	8	4			S-3	24	1
	6' - 8'	spoon	4	5	5	13			S-4	24	6
	8' - 10'	spoon	9	18	10	5	10'		S-5	24	6
	10' - 12'	spoon	3	12	8	12		SILTY SAND: Brown silty sand, medium dense, changing to gray rock fragments and coarse sand at 12'-5".	S-6	24	10
	12'-13.4'	spoon	28	32	100/5"		13' - 5"		S-7	17	8
								Refusal encountered at 13' - 5".			

GENERAL REMARKS:

Note: The ground surface elevation is based on the plan prepared by Waterman Engineering Co. of E. Providence, RI dated on Dec. 1992.

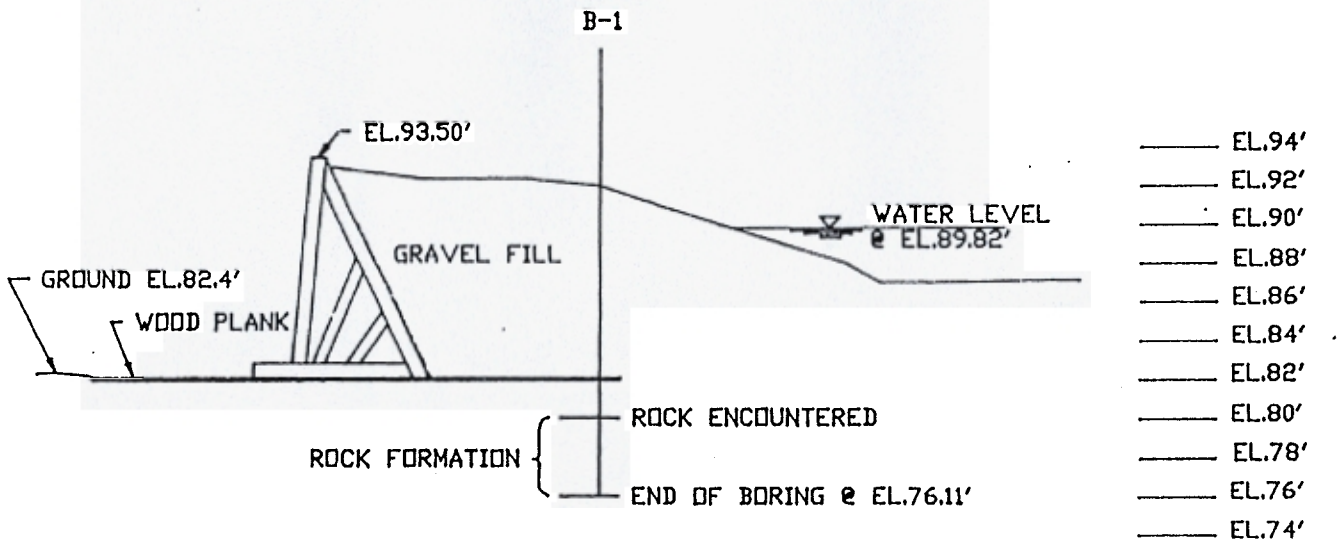

SECTION A-A (NORMAL WATER LEVEL CONDITION)

SCALE 1"=10'

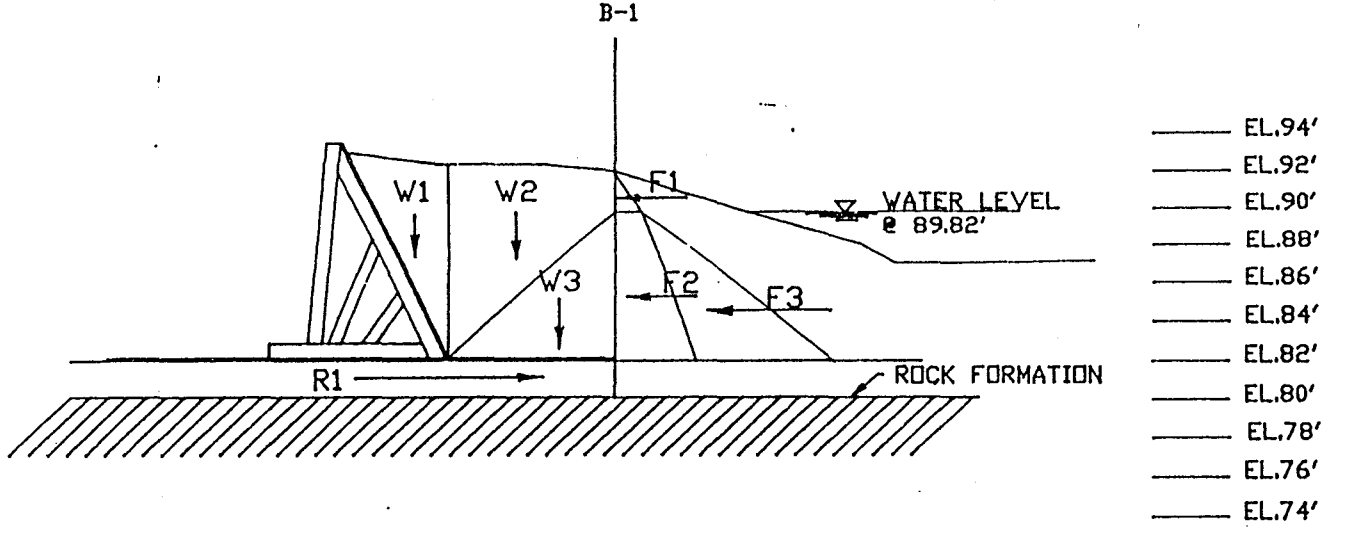

FORCES UNDER NORMAL WATER LEVEL CONDITION

SCALE 1"=10'

FIGURE 3

10A

Table 1.4 Porosity, Void Ratio, and Unit Weight of Typical Soils in Natural State

Description	Porosity (n)	Void Ratio (e)	Water Content (w)[a]	Unit Weight g/cu cm γ_d[b]	Unit Weight g/cu cm γ_{sat}[c]	Unit Weight lb/cu ft γ_d	Unit Weight lb/cu ft γ_{sat}
1. Uniform sand, loose	0.46	0.85	32	1.43	1.89	90	118
2. Uniform sand, dense	0.34	0.51	19	1.75	2.09	109	130
3. Mixed-grained sand, loose	0.40	0.67	25	1.59	1.99	99	124
4. Mixed-grained sand, dense	0.30	0.43	16	1.86	2.16	116	135
5. Windblown silt (loess)	0.50	0.99	21	1.36	1.86	85	116
6. Glacial till, very mixed-grained	0.20	0.25	9	2.12	2.32	132	145
7. Soft glacial clay	0.55	1.2	45	1.22	1.77	76	110
8. Stiff glacial clay	0.37	0.6	22	1.70	2.07	106	129
9. Soft slightly organic clay	0.66	1.9	70	0.93	1.58	58	98
10. Soft very organic clay	0.75	3.0	110	0.68	1.43	43	89
11. Soft montmorillonitic clay (calcium bentonite)	0.84	5.2	194	0.43	1.27	27	80

Sands $G_s \approx 2.65$
Clays $G_s \approx 2.5$ to 2.9 (2.7 average)

Table 4.1 Representative Values of ϕ_d for Sands and Silts

Material	Degrees Loose	Degrees Dense
Sand, round grains, uniform	27.5	34
Sand, angular grains, well graded	33	45
Sandy gravel	35	50
Silty sand	27–33	30–35
Inorganic silt	27–30	30–34

Table 5.3 Penetration Resistance and Soil Properties on Basis of the Standard Penetration Test

Sands (Fairly Reliable) Number of Blows per ft, N	Sands (Fairly Reliable) Relative Density	Clays (Rather Unreliable) Number of Blows per ft, N	Clays (Rather Unreliable) Consistency	s_u (ksf) Unconfined Compres Strength q_u (tons/sq ft)
		Below 2	Very soft	Less than 0.25
0–4	Very loose	2–4	Soft	0.25–0.5
4–10	Loose	4–8	Medium	0.5 –1.0
10–30	Medium	8–15	Stiff	1.0 –2.0
30–50	Dense	15–30	Very stiff	2.0 –4.0
Over 50	Very dense	Over 30	Hard	Over 4.0

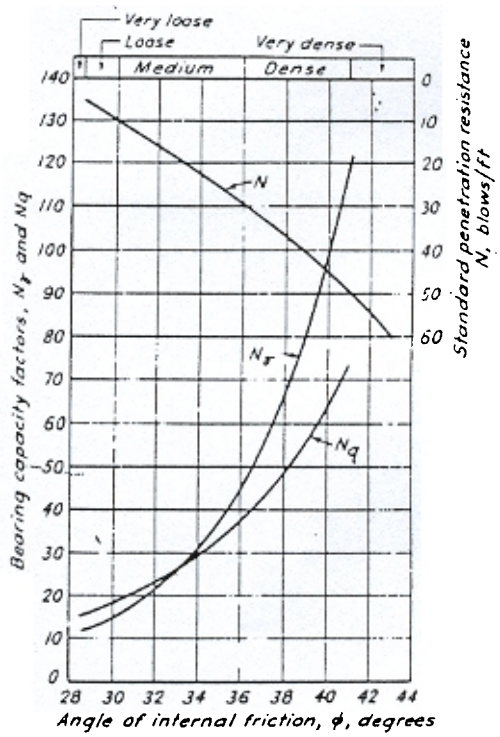

k (cm/sec)	Drainage	Soil Type
10^2	Good	Clean gravels
10^1	Good	Clean gravels
1.0	Good	Clean sands
10^{-1}	Good	Clean sand and gravel mixtures
10^{-2}	Good	
10^{-3}	Good	
10^{-4}	Good	
10^{-5}	Poor	Very fine sands
10^{-6}	Poor	Organic and inorganic silts, mixtures of sand silt and clay, glacial till, stratified clay deposits.
10^{-7}	Practically impervious	Impervious soils, for example, homogeneous clays below zone of weathering.
10^{-8}		
10^{-9}		

Type of sand (U.S. Army Engineer classification)	Coefficient of permeability $k \times 10^{-4}$ cm/sec
Very Fine sand	50
Fine sand	200
Fine to Medium sand	500
Medium sand	1,000
Medium to Coarse sand	1,500
Gravel and Coarse sand	3,000

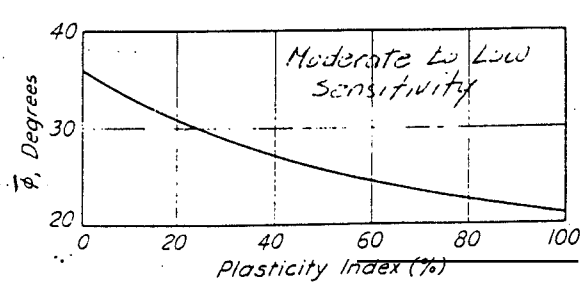

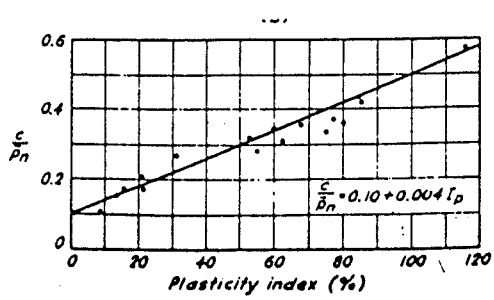

From [3]

Boring location plan (page 11A)

Boring Logs (pages 12 to 20) SPT blow counts average in teens. Medium sand and gravel.

Note in some logs blow counts exceed 30 indicating a very dense material. This usually occurs above the rock and may indicate weathered rock or till.

Based on boring data the assumed properties for the soil appear conservative, use USACE values.

For rock using Engineer's design experience (see below) the USACE the values are conservative.

Additional Rock Properties

Rock unit weight $\gamma = 140$ pcf (Engineers Judgment)

A GEI geologist visited the site on July 7, 2001 to hand transcribe boring logs from another site and map visible rock outcrops near the dam site (see figure page 4-21). Borings at the other site [2] are located approximately 1 mile from the dam (see page 4-22) and appear to be in a different rock formation. A copy of relevant pages from [8] as well as an outcrop sketch an summary paragraph from the geologist is attached as pages 4- 21 to 4-31.

The Rhode Island Building Code [6] amends BOCA [1].

From [1] (see page 32) $\sigma = 40$ tsf (minimum)

From [2] (see page 33) $\sigma = 40$ tsf (minimum)

Use an allowable bearing pressure of $\sigma = 20$ tsf since rock at dam location cannot be observed at this time.

Confirm rock quality during construction.

[3] 4-11A

IMAGE	X-REF	OFFICE
---	---	HOPK

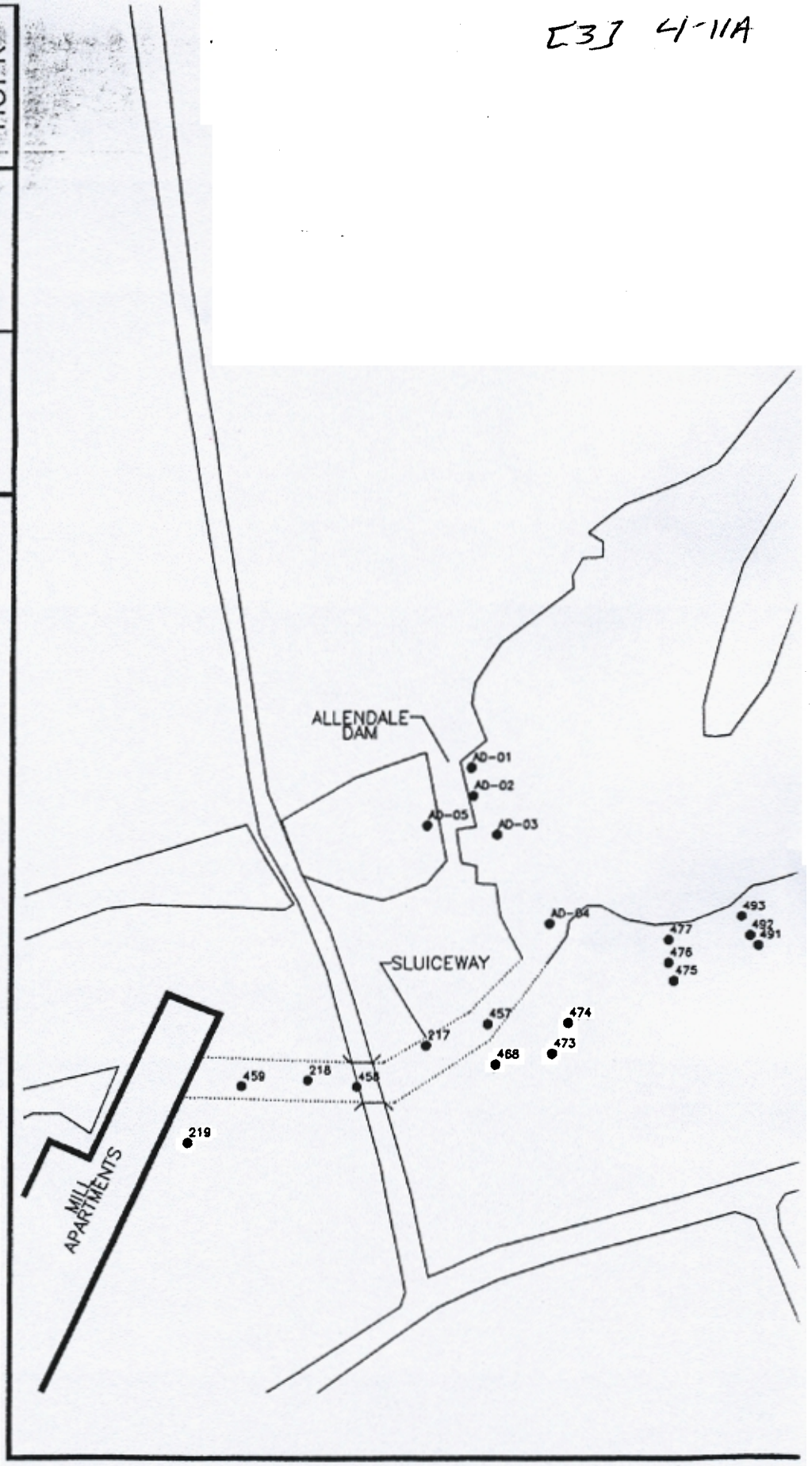

TECHNOLOGY CORPORATION

[3] 4-12

VISUAL CLASSIFICATION OF SOILS

PROJECT NUMBER: 782893	PROJECT NAME: Centredale Manor, North Providence, RI	
BORING NUMBER: AD-Ø1	COORDINATES:	DATE:
ELEVATION:	GWL: Depth Date/Time	DATE STARTED: 7/22/99
ENGINEER/GEOLOGIST: M. Reilly	Depth Date/Time	DATE COMPLETED: 7/22/99
DRILLING METHODS: Driven casing, Drive-and-wash / 2"+3" split-barrel samplers		PAGE 1 OF 2

DEPTH (Ft)	SAMPLE TYPE & NO.	BLOWS ON SAMPLER PER (6")	RECOVERY (")	DESCRIPTION	USCS SYMBOL	MEASURED CONSISTENCY (TSF)	WELL CONSTRUCTION	Background Readings REMARKS
				Surface: (Fill) silt, sand & gravel.*				Rad: 10-15 μR/hr. PID: 0.0 ppm
1	S-1	11, 9, 13, 14 (300# hammer, 3" spoon sampler)	14"	(Fill) Soft, moderate brown, organic SILT, SAND and ROOTS 0.2' (Fill) Medium dense, olive to light gray medium to coarse SAND and fine to coarse, subangular GRAVEL 1.2' (Fill) undescribed. 2.0'	N/A	—	—	0845 B.Zone: FID: 0.2 ppm Rad: N/A 2' Hole: FID: 0.0 ppm Rad: N/A Sampler: N/A Sample AD01A collected at 0845 from 0'-1' interval.
2 3	S-2	29, 26, 11, 7 (300# hammer, 3" spoon sampler)	7"	(Fill) Moderate to olive gray, silty fine to coarse SAND and fine to coarse subround to angular GRAVEL. 4.0'	N/A	—	—	0850 B.Zone: PID: 0.0 ppm Rad: 10-15 μR/hr 4' Hole: PID: 0.0 ppm Rad: N/A Sampler: N/A
4 5	S-3	11, 10, 7, 5 (300# hammer, 3" spoon sampler)	4"	(Fill) Loose, light brown to olive gray, silty medium to coarse SAND and fine to coarse, subround to subangular GRAVEL moist at tip of sampler				0854 B.Zone: PID: 0.0 ppm Rad: 10-15 μR/hr 6' Hole: PID: 0.0 ppm Rad: N/A Sampler: N/A

NOTES:

Drilling Contractor See pg 2

Drilling Equipment

Driller:

Reference: Field Book: C.R., RI

Hand Auger Book 2

pp 72 through 77

*Due to access constrictions, AD01 relocated 1.0 foot to the Southwest of staked location.

2438-3-86

TECHNOLOGY CORPORATION

[3] 4-13

VISUAL CLASSIFICATION OF SOILS

PROJECT NUMBER: 782893	PROJECT NAME: Centredale Manor, North Providence, RI	
BORING NUMBER: AD-01	COORDINATES:	DATE:
ELEVATION:	GWL: Depth Date/Time	DATE STARTED: 7/22/99
ENGINEER/GEOLOGIST: M. Reilly	Depth Date/Time	DATE COMPLETED: 7/22/99
DRILLING METHODS: See Pg 1		PAGE 2 OF 2

DEPTH (ft)	SAMPLE TYPE & NO.	BLOWS ON SAMPLER PER (6")	RECOVERY IN	DESCRIPTION	USCS SYMBOL	MEASURED CONSISTENCY (TSF)	WELL CONSTRUCTION	REMARKS
6	S-4	6, 5, 4, 11 (300# hammer, 3" sampler)	3"	(Fill) Loose, olive gray, silty medium to coarse SAND and fine rounded GRAVEL, some small roots, wet. 7.0'	N/A	–	–	0910 B.Zone: PID: 0.0 ppm Rad: 10-15 μR/hr 8' Hole: PID: 1.2 ppm Rad: N/A Sampler: N/A
8	S-5	14, 16, 11, 15 (300# hammer, 3" sampler)	17"	(Fill) Firm, olive gray, silty CLAY and medium to coarse SAND and fine to coarse subangular GRAVEL, some roots and plant material, wet. 9.6'	N/A	–	–	0925 ☆ → Sample AD01B collected at 0925, from 9.0' to 10.0' ~~foot~~ interval. Fill material
				Medium dense, olive brown, silty, clayey. Fine to coarse SAND and fine rounded GRAVEL. 10'	GM/GC	–	–	Natural material
10	S-6	45, 60, 72, 100/3" (300# hammer, 3" sampler)	20"	Very dense, olive brown, silty, clayey fine to coarse SAND and fine to coarse subangular to subround GRAVEL, saturated. (2nd attempt, with 300# hammer over a 2" sampler, yielded SILT, SAND and GRAVEL)	GM/GC	–	–	0945 Air Monitoring discontinued. ☆ → Sample AD01C collected at 0945, from 10.7'–11.7' interval.
12	–	–	–	End of Exploration at 11.7 feet, due to Refusal.	–	–	–	–

NOTES:

Drilling Contractor Geologic

Drilling Equipment Portable Tripod rig with 4" casing,

~~Driller~~: 140# + 300# hammers

Reference: Field Book: C.R., RI

Hand Auger Book 2

pp 72 through 77

243B-3-86

TECHNOLOGY CORPORATION

[3] 4-14

VISUAL CLASSIFICATION OF SOILS

PROJECT NUMBER: 782893	PROJECT NAME: Centredale Manor, North Providence, RI	
BORING NUMBER: AD-02	COORDINATES:	DATE:
ELEVATION:	GWL: Depth Date/Time	DATE STARTED: 7/21/99
ENGINEER/GEOLOGIST: M. Reilly	Depth Date/Time	DATE COMPLETED: 7/21/99
DRILLING METHODS: Driven casing, Drive-and-Wash/2"+3" split-barrel samplers		PAGE 1 OF 2

DEPTH (Ft)	SAMPLE TYPE & NO.	BLOWS ON SAMPLER PER (6")	RECOVERY IN	DESCRIPTION	USCS SYMBOL	MEASURED CONSISTENCY (TSF)	WELL CONSTRUCTION	Background Readings REMARKS
				Surface: Sand and Gravel Fill				Rad: N/A FID: N/A
1	S-1	14, 14, 8, 16 (300# hammer) (3" sampler)	20"	Medium dense, olive gray to grayish brown, fine to coarse SAND and GRAVEL, moist. (Fill) 0.5' (Fill) Firm, light gray, sandy SILT and GRAVEL, dry. 1.0' (Fill) Light gray, fine to coarse SAND, dry. Coarse GRAVEL in tip of sampler. Medium dense. 2.0'	N/A	–	–	0857 ☆ B. Zone: FID: 0 ppm Rad: 10 μR/hr 2' Hole: FID: 0.0 ppm Rad: 10 μR/hr Sampler: FID: 0.0 ppm Rad: 10 μR/hr * → Sample AD05A collected at 0908, from 0'-1' interval
2								
3	S-2	26, 26, 22, 27 (Hammer and sampler wk.)	16"	(Fill) Medium dense, light to olive gray, silty medium to coarse SAND and fine to coarse, GRAVEL (subangular), saturated. 2.5 Medium dense, brown, silty fine to coarse SAND, moist (grading downward to dry). 2.8' (Fill) medium dense, light gray, silty fine to coarse SAND and subround GRAVEL, dry. 4.0	N/A	–	–	Water may be perched. Due to hole collapse at 4 feet, switch to drive-and-wash technique, utilizing potable water from Town Asphalt. Air monitoring: N/A
4								
5	S-3	23, 14, 11, 9 (140# hammer) (3" sampler)	6"	(Fill) Medium dense, olive brown to olive gray, silty fine to coarse SAND and fine to coarse subangular GRAVEL, wet.	N/A			0946 B. Zone: FID: 0.0 ppm Rad: 10 μR/hr 6' Hole: FID: 0.0 ppm Rad: 10 μR/hr Sampler: FID: 0.0 ppm Rad: 10 μR/hr. Water table at 4.0 feet is probably actual, as all soils below are wet to saturated.
6								

NOTES:

Drilling Contractor See pg 2

Drilling Equipment

Driller:

☆ Due to access restriction, had to relocate

Reference: Field Book: C.R., RI

Hand Auger Book 2

pp 66 through 71

TECHNOLOGY CORPORATION

AD 02 (continued)

[3] 4-15

VISUAL CLASSIFICATION OF SOILS

PROJECT NUMBER: 782893	PROJECT NAME: Centredale Manor, North Providence, RI	
BORING NUMBER: AD-02	COORDINATES:	DATE:
ELEVATION:	GWL: Depth Date/Time	DATE STARTED: 7/21/99
ENGINEER/GEOLOGIST: M. Reilly	Depth Date/Time	DATE COMPLETED: 7/21/99
DRILLING METHODS: See pg 1		PAGE 2 OF 2

DEPTH (ft)	SAMPLE TYPE & NO.	BLOWS ON SAMPLER PER (6")	RECOVERY IN	DESCRIPTION	USCS SYMBOL	MEASURED CONSISTENCY (TSF)	WELL CONSTRUCTION	REMARKS
6								1106 Air Monitoring: N/A
7	S-4	8, 7, 9, 7 (140# hammer) (2" sampler)	6"	(Fill) Loose, olive brown to olive gray, silty fine to coarse SAND and fine to coarse subangular GRAVEL, Saturated. 8'	N/A	–	–	* Sample AD02B collected at 1115 from 7'-9' interval. Fill material
8								
9	S-5	22, 16, 10, 9 (140# hammer) (2" sampler)	4"	Medium dense, olive brown to olive gray, silty fine to coarse SAND and fine GRAVEL, saturated. 10'	GM	–	–	Natural material 1113 Air Monitoring: N/A
10								
11	S-6	8, 3, 5, 60/0"	1"	Loose, medium to dark gray, silty, fine to coarse SAND and fine to coarse subrounded GRAVEL, with rootlets, wood fragments at 11.5'. 11.3'	GM	–	–	1144 Air Monitoring: N/A
				Gray, fine sandy SILT, saturated (11.3-11.5')	ML		*	Sample AD02C collected at 1144, from 10.5'-11.5' interval.
12		First 3 blows: 140# hammer/2" sampler. Final: 300# hammer/2" sampler.		End of Exploration at 11.5, due to Refusal.				

NOTES:

Drilling Contractor GeoLogic

Drilling Equipment Portable tripod rig with 4" casing, 140# & 300# hammers

Driller:

Reference: Field Book: C.R., RI Hand Auger Book 2 pp 66 through 71

243B-3-86

TECHNOLOGY CORPORATION

[3] 4-16

VISUAL CLASSIFICATION OF SOILS

PROJECT NUMBER: 782893	PROJECT NAME: Centredale Manor, North Providence, RI	
BORING NUMBER: AD-03	COORDINATES:	DATE:
ELEVATION:	GWL: Depth Date/Time	DATE STARTED: 7/20/99
ENGINEER/GEOLOGIST: M. Reilly	Depth Date/Time	DATE COMPLETED: 7/20/99
DRILLING METHODS: Driven Casing, Drive-and-wash / 2"+3" split-barrel samplers		PAGE 1 OF 2

DEPTH (FT)	SAMPLE TYPE & NO.	BLOWS ON SAMPLER PER (6")	RECOVERY IN	DESCRIPTION	USCS SYMBOL	MEASURED CONSISTENCY (TSF)	WELL CONSTRUCTION	REMARKS
				Surface: Silt, Sand + Gravel				
1	S-1	25, 10, 20, 20 (140# hammer)	14"	(Fill) Loose, brown to grayish brown SILT and fine to coarse SAND and fine to coarse, rounded GRAVEL, with debris (glass), moist to wet. 1.8'	N/A	–	–	0926 (3" sampler) B-Zone: FID: 1.3 ppm Rad: 10-12 μR/hr 2' Hole: FID: 0.4 ppm Rad: 10-12 μR/hr Sampler: FID: 0 ppm Rad: 10-12 μR/hr *Sample AD-03-A collected at 0926 from 0'-2' interval.
2				(Fill) Dense, moderate to grayish brown, silty fine to coarse SAND and fine GRAVEL, wet. 2.0				
3	S-2	29, 50, 120, 120/3" 140# hammer 3" sampler	8"	(Fill) Very dense, brown to olive gray silty fine to coarse SAND and fine to coarse, rounded GRAVEL, wet. 3.5'	N/A	–	–	0940 (No sample submitted). B. Zone: FID: 1.5 ppm Rad: 10-12 μR/hr 3.5' Hole: FID: 0.8 ppm Rad: 10-12 μR/hr Sampler: FID: 0.0 ppm Rad: 10-12 μR/hr Due to refusal + collapse, relocate hole 2' NW of orig. hole. Switch to drive-and-wash w/potable water from town asphalt. Resume at 4'
4								
5	S-3	50, 20, 30, 28 (300# hammer, 2" sampler)		(Fill) medium dense, light brown to grayish green SILT, fine to coarse SAND, and weathered fine to coarse GRAVEL, moist to wet. 5.5'	N/A	–	–	1405 (No sample submitted) B. Zone: FID: 0.0 ppm Rad: 8-10 μR/hr Sampler: FID: 0.0 ppm Rad: 8-10 μR/hr
6				(Fill) medium dense, light brown to olive gray, silty fine to coarse SAND and angular weathered GRAVEL. 6.0'				

NOTES:

Drilling Contractor GeoLogic

Drilling Equipment Portable tripod rig with 4" casing, 140# + 300# hammers

~~Driller:~~

Reference: See pg 2

2436-3-86

TECHNOLOGY CORPORATION

[3] 4-17

VISUAL CLASSIFICATION OF SOILS

PROJECT NUMBER: 782893	PROJECT NAME: Centredale Manor	
BORING NUMBER: AD-03	COORDINATES:	DATE:
ELEVATION:	GWL: Depth Date/Time	DATE STARTED: 7/20/99
ENGINEER/GEOLOGIST: M. Reilly	Depth Date/Time	DATE COMPLETED: 7/20/99
DRILLING METHODS: see pg 1		PAGE 2 OF 2

DEPTH ( )	SAMPLE TYPE & NO.	BLOWS ON SAMPLER PER ( )	RECOVERY ( )	DESCRIPTION	USCS SYMBOL	MEASURED CONSISTENCY (TSF)	WELL CONSTRUCTION	REMARKS
6				(Fill)				1415
	S-4	35, 99, 120/0"	12"	Very dense Olive gray to Olive brown silty fine to coarse SAND and weathered angular to subangular GRAVEL, wet. In tip of sampler: weathered rock (greenish gray schist)	N/A			B. Zone: FID: 0.0 ppm Rad: 8-12 mR/hr Sampler: FID: 0.5 ppm Rad: 8-12 mR/hr AD-03-C Sample collected at 1415 from 6'-7' interval.*
7				End of Exploration at 7.0 feet, due to refusal				* No "B" sample collected (No natural material encountered)
8				300# hammer, 2" sampler				
9								
10								
11								
12								

NOTES:

Drilling Contractor See pg 1

Drilling Equipment

Driller:

Reference: Field Book: C.R., RI

Hand Auger Book 2

pp 60 through 63

243B-3-86

TECHNOLOGY CORPORATION

[3] 4-18

VISUAL CLASSIFICATION OF SOILS

PROJECT NUMBER: 782893	PROJECT NAME: Centredale Manor, North Providence, RI	
BORING NUMBER: AD-04 ~~AD04~~ msR	COORDINATES:	DATE:
ELEVATION:	GWL: Depth Date/Time	DATE STARTED: 7/19/99
ENGINEER/GEOLOGIST: M. Reilly	Depth Date/Time	DATE COMPLETED: 7/19/99
DRILLING METHODS: Driven casing, Drive and Wash & split-barrel sampler.		PAGE 1 OF 2

DEPTH (Ft)	SAMPLE TYPE & NO.	BLOWS ON SAMPLER PER 6"	RECOVERY IN	DESCRIPTION	USCS SYMBOL	MEASURED CONSISTENCY (TSF)	WELL CONSTRUCTION	Background Readings REMARKS
				Surface: Vegetation				Rad: 10-15 μR/hr FID: 6.1 ppm
				Root mass, soft, moderate brown organic CLAY, moist. 0.2	PT			
				Soft, moderate brown silty CLAY, few roots, moist 0.3'	CL			
1	~~AD msR~~ ~~04 msR~~ ~~A msR~~ S-1	1, 10, 9, 8 (140# hammer)	18"	Soft, dark brown silty PEAT with ~~occasion~~ occasional coarse Gravel (at 1 ft), moist to wet. 1.0	PT	–	–	Sample AD-04-A collected at 1140, at 1 ft. ~~msR Sample collected 1140~~
				(Fill) Loose, moderate to yellowish brown silty SAND and fine to coarse GRAVEL, some roots, moist to wet.	N/A			
2				(Fill) Very dense, gray brown to yellowish brown, silty fine to coarse SAND with fine to coarse Gravel, saturated. 2.5	N/A			
3	S-2	20, 79, 70, 57 (140# hammer)	18"	Very dense, medium gray, silty medium ~~SAND~~ to coarse SAND, with fine to coarse Gravel, saturated 4.0	GM	–	–	Sample AD-04-B collected at 1147, at transition from Fill to Natural material at ~~2.5'~~ depth of 2'-3'
4				Very dense, moderate brown, silty fine to coarse SAND (coarsening downward), wet. 4.8'	SW			1403 Rad: 10-15 μR/hr (B. zone) FID: Borehole: 22 ppm B. zone: 0.0 ppm Sample: 0-2 ppm (split-spoon)
5	S-3	26, 78, 68, 32 (300# hammer)	24"	Very dense, light to medium gray, fine to coarse SAND and fine to coarse GRAVEL (subrounded), wet 5.0'	GW			
				(Weathered Rock) Very hard, weathered, greenish-gray schist (Boulder)	N/A			No sample submitted
6								

NOTES:

Drilling Contractor Geo Logic

Drilling Equipment Portable Tripod rig with 4" casing,

~~Driller~~: 140# and 300# hammers.

Reference: See pg 2

243B-3-86

TECHNOLOGY CORPORATION

[3] 4-19

VISUAL CLASSIFICATION OF SOILS

PROJECT NUMBER: 782893	PROJECT NAME: Centredale Manor, North Providence, RI	
BORING NUMBER: AD-04	COORDINATES:	DATE:
ELEVATION:	GWL: Depth Date/Time	DATE STARTED: 7/19/99
ENGINEER/GEOLOGIST: M. Reilly	Depth Date/Time	DATE COMPLETED: 7/19/99
DRILLING METHODS: See pg 1		PAGE 2 OF 2

DEPTH (ft)	SAMPLE TYPE & NO.	BLOWS ON SAMPLER PER (6")	RECOVERY IN	DESCRIPTION	USCS SYMBOL	MEASURED CONSISTENCY (TSF)	WELL CONSTRUCTION	REMARKS
6	S-4	25, 35, 22, 24 (300# hammer)	18"	Dense, light gray SILT, ~~and~~ mgr CLAY, ~~and~~ mgr medium to coarse SAND and fine to coarse subangular GRAVEL, wet. 8.0'	GM / GC	–	–	1433 No sample submitted.
8	S-5	12, 11, 10, 19	16"	Dense, light olive gray, silty medium to coarse SAND and fine to coarse subround to subangular GRAVEL, saturated				1445 Sample AD-04-C collected at 1445, at the 9'-10' interval (Refusal)
10				End of Exploration at 10 feet due to refusal.				1450: Standing water at 2 feet in borehole.

NOTES:

Drilling Contractor See pg 1

Drilling Equipment

Driller:

Reference: Field Book: C.R., RI

Hand Auger Book 2

pp 54 through 59

243B-3-86

TECHNOLOGY CORPORATION

VISUAL CLASSIFICATION OF SOILS

[3] 4-20

PROJECT NUMBER: 782893	PROJECT NAME: Cenredale Manor, North Providence, RI	
BORING NUMBER: AD-05	COORDINATES:	DATE:
ELEVATION:	GWL: Depth Date/Time	DATE STARTED: 7/20/99
ENGINEER/GEOLOGIST: M. Reilly	Depth Date/Time	DATE COMPLETED: 7/20/99
DRILLING METHODS: Hand Auger		PAGE 1 OF 1

DEPTH (Ft.)	SAMPLE TYPE & NO.	BLOWS ON SAMPLER PER (—)	RECOVERY (IN)	DESCRIPTION	USCS SYMBOL	MEASURED CONSISTENCY (TSF)	WELL CONSTRUCTION	REMARKS
				Surface: Sand. (Water level ~3' above grade)				Background readings Rad: N/A FID: N/A
	S-1	—	12"	Brown, medium to coarse SAND and fine to coarse, rounded GRAVEL, saturated. 0.67'	SW	—	—	Sample AD05A collected at 1335, from 0'-1' interval.
				Grayish black to black, organic SILT, CLAY and fine to medium SAND, some roots and peat material, snail shell, wet to saturated. 1.0	OL/PT			
	—	—	—	Gray, medium to coarse SAND with Silt. 1.2'	SM	—	—	
				End of Exploration at 1.2 feet, due to refusal on large Gravel/Cobbles.				

NOTES:

Drilling Contractor: IT

Drilling Equipment: Hand Auger (3")

Driller:

Reference: Field Book: C.R., RI

Hand Auger Book 2

page 64. (pg 65 - Blank)

2438-3-86

GEI Consultants, Inc.

		Project 01179	Page 1 of 1
Client	Loureiro Engineering Associates	Date July 5, 01	By RCT
Subject	Description of outcrops near Allendale Dam	Checked	By
		Approved	By

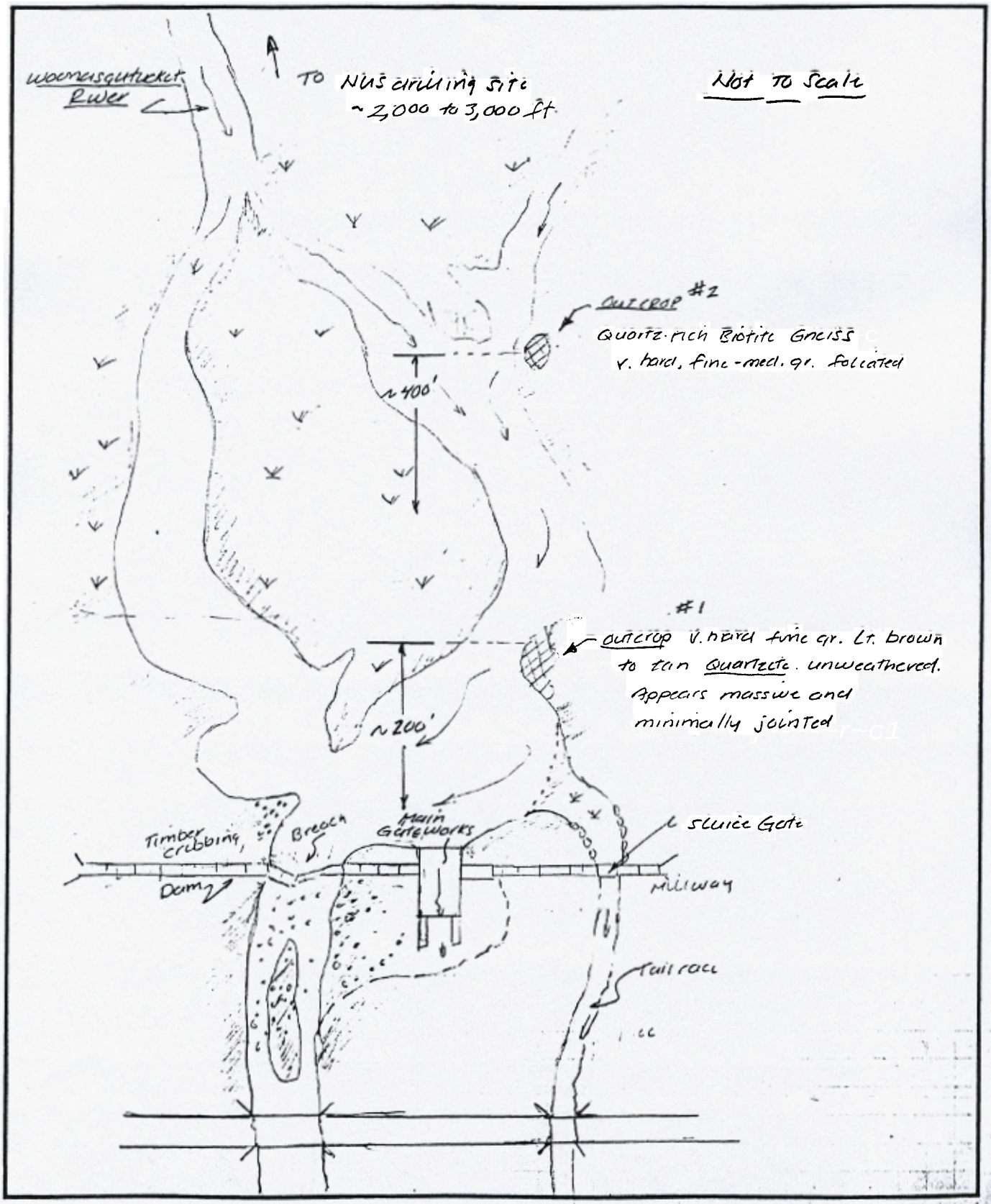

128 miles

4-22

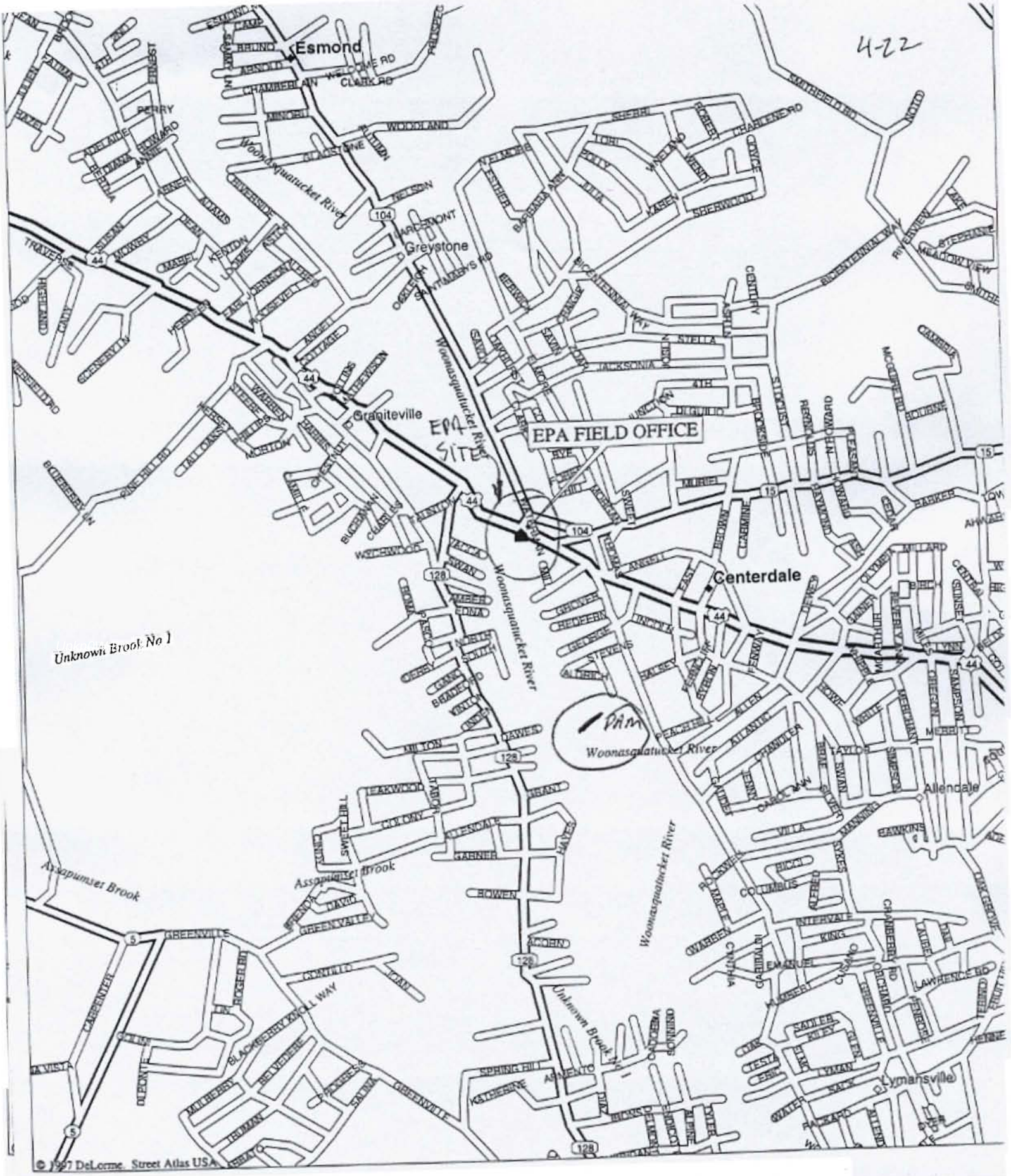
Esmond
Greystone
Graniteville
EPA SITE
EPA FIELD OFFICE
Centerdale
Allendale
Lymansville
Woonasquatucket River
Unknown Brook No 1
Assapumset Brook
Assapuquet Brook
Unknown Brook No 1
DAM
© 1997 DeLorme. Street Atlas USA.

ALLENDALE DAM
BEDROCK GEOLOGY

Based on a USGS bedrock geologic map of the Providence Quadrangle (Quinn, 1959) and limited exposures of bedrock in outcrops located about 200-400 feet north of the Allendale Dam, the bedrock beneath the dam and surrounding area is mapped as the Westboro Quartzite. The Quartzite underlies most of the valley of the Woonasquatucket River, and is described in this report as gray, medium grained, massive to thin bedded quartzite, and commonly containing beds of quartz-mica schist.

Two outcrops were observed north of the dam, along the east bank of the former river (prior to the breaching of the dam). The outcrop locations are shown in the attached sketch. The first outcrop (#1), located about 200 feet north of the dam, consists of light gray, very hard, massive, fine grained quartzite. The second outcrop located about 400 feet north of the dam (#2) consisted of very hard, fine to medium grained quartz-rich biotite gneiss (or schist) These rock types are consistent with those mapped in the area.

Based on the limited rock exposures near the dam, and published description of the bedrock, the quartzite is expected to a very hard and massive; and resistant to weathering caused by glacial effects.

REFERENCE

Quinn, Alonzo W. *"Bedrock Geology of the Providence Quadrangle, Rhode Island"*. USGS Geologic Quadrangle Map GQ-118, 1959

NOTE:

Borings performed by TetraTech-NUS are located ~ 3/4 mile north of the dam. These borings penetrated the "Sneech Pond Schist", consisting of interbedded chlorite (green) schist, quartzite, minor marble. Much softer than the bedrock beneath the dam.

By William Pitt.

DEPARTMENT OF THE INTERIOR

[8] 4-24

UNITED STATES GEOLOGICAL SURVEY

GEOLOGIC QUADRANGLE MAPS OF THE UNITED STATES

BEDROCK GEOLOGY OF THE PROVIDENCE QUADRANGLE RHODE ISLAND

By
Alonzo W. Quinn

INDEX MAP
OF RHODE ISLAND

PUBLISHED BY THE U. S. GEOLOGICAL SURVEY
WASHINGTON, D. C.
1959

MAP GQ-118

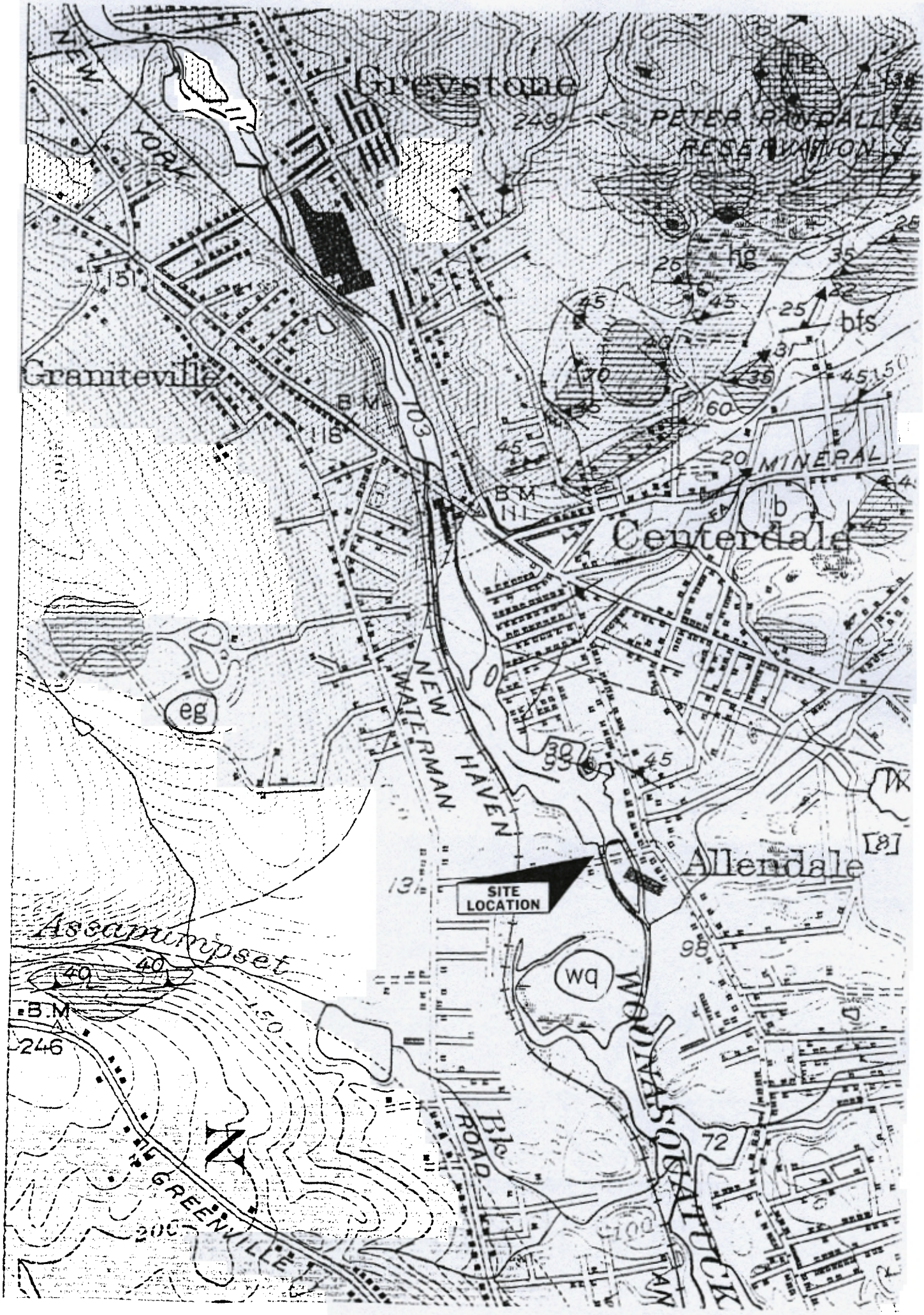
Greystone
PETER RANDALL
RESERVATION
NEW YORK
Graniteville
B.M.
118
103
B.M.
111
MINERAL
Centerdale
hg
bfs
b
eg
NEW HAVEN
WATERMAN
Allendale
SITE LOCATION
Assapumpset
wq
B.M.
246
GREENVILLE
ROAD
WOONASQUATUCK
LAKE

[8] 4-26

30"

EXPLANATION

Sedimentary rocks of Narragansett basin

PENNSYLVANIAN

Pri

Rhode Island formation

Greenish, gray, dark-gray, to black graywacke, conglomerate, sandstone, shale, and meta-anthracite, as well as a few beds of red sandstone and shale at the northeast corner of the quadrangle; irregular bedding and crossbedding common; essentially unmetamorphosed in the north and changed to slate, phyllite, and schist in the south. May include Pondville conglomerate in covered areas

Pp

Pondville conglomerate

Gray, coarse-grained conglomerate, containing pebbles and cobbles of quartzite, schist, granite, and granite gneiss in a sandy or shaly matrix; beds irregular and discontinuous; pebbles elongate in southern half of quadrangle

OR OLDER

eg

Boulders near site (imported) (Quarry)

Esmond granite

Light-gray to light-pink, medium-grained massive

sg

Scituate granite gneiss

Light-gray to pink, medium- to coarse-grained; characterized by splotchy arrangement of biotite

gg

Grant Mills

gm

Granite gneiss

Centerdale, bfs

[2] 4-27

PRECAMBRIAN

wq

SITE

Westboro quartzite

Bluish-gray to gray, medium-grained, massive to thin-bedded quartzite; with interbeds of greenish quartz-mica schist

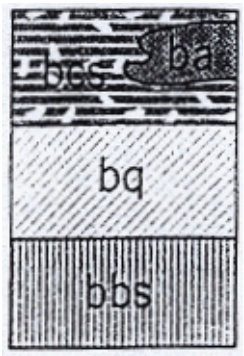

Mussey Brook schist

Chiefly green to greenish-gray, fine-grained, thin-bedded chlorite-quartz schist, but includes thin beds of hornblende schist, biotite schist, quartzite, marble, greenstone, steatite, and serpentine, bcs*; dark-gray to green, fine- to medium-grained amphibolite, schistose along margins, massive elsewhere,* ba*; gray to light-gray, medium- to fine-grained, thin-bedded to massive quartzite; includes beds of quartz-mica schist,* bq*; green to gray, fine-grained biotite-quartz schist, interbedded with quartz-mica schist, chlorite schist, amphibole schist, marble, and quartzite,* bbs

Bedrock outcrops and areas of closely spaced bedrock outcrops

Contact

Long dashes where approximately located; short dashes where indefinite; dotted where concealed

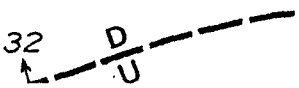

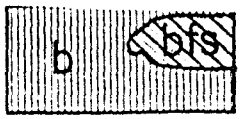

North of site (NUS-Borings) [8] 4-28

Sneech Pond schist

Chiefly gray to greenish-gray, fine-grained, schistose, interbedded schist, greenstone, quartzite, and marble, b; *gray to light gray, medium- to coarse-grained, streaky feldspathic schist, with interbeds of quartzite; exposed northeast of Centerdale,* bfs

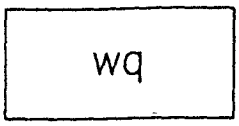

Bedrock at Dam site

Westboro quartzite

Bluish-gray to gray, medium-grained, massive to thin-bedded quartzite; with interbeds of greenish quartz-mica schist

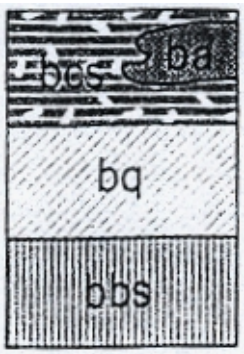

Mussey Brook schist

Chiefly green to greenish-gray, fine-grained, thin-bedded chlorite-quartz schist, but includes thin beds of hornblende schist, biotite schist, quartzite, marble, greenstone, steatite, and serpentine, bcs; *dark-gray to green, fine- to medium-grained amphibolite, schistose along margins, massive elsewhere,* ba; *gray to light-gray, medium- to fine-grained, thin-bedded to massive quartzite; includes beds of quartz-mica schist,* bq; *green to gray, fine-grained biotite-quartz schist, interbedded with quartz-mica schist, chlorite schist, amphibole schist, marble, and quartzite,* bbs

Blackstone series

PRECAMBRIAN(?)

Bedrock outcrops and areas of closely spaced bedrock outcrops

the western
ıic Precam-
e Blackstone
ɜ Blackstone
rocks of the
several plu-
in composi-
to granite;
ne series and
is of regional
nian age or

Jarragansett
d have been
plant fossils,
stem. These
upon the
ıd are the
ocks of the

IES
?)

includes a
metamor-
ɜ variety—
of several
and small
serpentine.
hese rocks
nterlayered
ocks.
ip of these
lest are to
oungest to
ite of the
ver valley
ted tenta-
artzite of
ey on the
nd similar
n, et al.,
is of the
olished in
e report,
rocks of

clase, and the minor constituents are quartz, biotite, calcite, magnetite, ilmenite, sphene, and apatite. A few crystals of black tourmaline also were seen. The amphibolite is interbedded with the chlorite-quartz schist (bcs). The mineral composition of the amphibolite might have resulted from the metamorphism of either an impure calcareous rock or of a volcanic rock.

SITE

WESTBORO QUARTZITE (wq)

Westboro quartzite underlies the valley of the Woonasquatucket River and the hills to the northeast. This rock is chiefly gray, medium-grained, and massive to thin-bedded quartzite, but beds of quartz-mica schist are common within the formation. The quartzite is composed mainly of interlocking grains of quartz, but muscovite, biotite, feldspar, calcite, magnetite, and pyrite are also present. The general 45° dip and the widths of outcrop indicate that the quartzite is approximately 2,200 feet thick in the vicinity of Allendale and 4,700 feet thick near Trigg Memorial Park. The rock here is very similar to the Westboro quartzite of the Blackstone River valley in the Pawtucket quadrangle (Quinn, et al., 1948; 1949), and the thicknesses are approximately the same. In both quadrangles the quartzite is underlain by the Mussey Brook schist and overlain by the Sneech Pond schist.

SNEECH POND SCHIST (b)

The Sneech Pond schist, a sequence of gray to greenish-gray, fine-grained rocks, is present in the northwest part of the Providence quadrangle. As in the Pawtucket quadrangle (Quinn, et al., 1948; 1949), it includes a great variety of schist, greenstone, quartzite, marbles of Rhode Island, these beds show wide variations in the content of magnesia and silicate minerals.

The largest mass of marble in the Providence quadrangle was at the site of an abandoned quarry 1,000 feet southeast of the south end of Wenscott Reservoir; this mass was in the Sneech Pond schist. Almost all the marble was quarried away and burned to quick lime. The excavation indicates that there were two lenses, the south lens 165 feet by 50 feet and the north one 80 feet by 25 feet. The marble was enclosed by gray feldspathic schist on the north and green chlorite schist on the south.

Of historic interest is a small pit in marble, now largely overgrown and partly filled with rubbish, from which in 1662 the first rock to be quarried and burned to quick lime in eastern North America may have been taken (Bishop, 1861, p. 218). This pit is about 3,300 feet S. 20° E. of the junction of Greenville Ave. and Waterman Road. However, it is believed by some that the earliest lime quarry was in the Pawtucket quadrangle.

Other beds and lenses of marble are: a thin, folded bed 1,700 feet east of Centerdale on Mineral Spring Ave.; a few blocks enclosed in schistose greenstone at the quarry in Dyerville; a small lens associated with steatite at Ochee Spring, which is 400 feet north of Hartford Ave. and 400 feet west of the Providence city line; small pits 2,700 feet west-southwest of the city line at Hartford Ave.; and a small exposure 600 feet northeast of Stone Pond, southwest of Thornton.

STEATITE (s)

Steatite, known also as soapstone has been quarried on a small scale a

[8] 4-27

[8] 4-30

Sneech Pond schist

UCTION

drock of the Provi-
vas undertaken as
ve program of the
elopment Council
ical Survey to pre-
ologic map of the
rt on mineral re-
vork in the Provi-
was done mostly
of 1952 and 1953,
g and examination
were done in the
55, 1956, and 1957.
uadrangle is at the
tt Bay and at the
he Narragansett
ansett basin is a
of Pennsylvanian
hat extends from
ansett Bay north-
de Island through
tucket and thence
e vicinity of Han-
st margin extends
ll River, Mass.,
t shore of Narra-
Providence quad-
the west margin
t basin, includes
nd also rocks out-
quadrangle pro-
y to examine the
eas and their re-

by expressed to
cooperation aided
this report. Mr.
ssor Emeritus of
University, de-
the railroad tun-
versity and other
now covered. He
h in general dis-

the Blackstone series southwest of the Westboro quartzite are correlated with the Mussey Brook schist and those to the northeast of the quartzite are correlated with the Sneech Pond schist.

The schistosity and the bedding of the Blackstone series here are generally parallel. The general dip of 45°, together with the width of outcrop, indicates a possible total thickness of the Blackstone series in the Providence quadrangle of more than 20,000 feet.

MUSSEY BROOK SCHIST

The Mussey Brook schist of the Providence quadrangle, like that of the Pawtucket quadrangle (Quinn, et al., 1948; 1949), consists of several types of rocks. In the Providence quadrangle it has been feasible to map separately biotite-quartz schist (bbs), quartzite (bq), chlorite-quartz schist (bcs), and amphibolite (ba); small lenses of marble (m) and of steatite (s) are present but could not be mapped separately.

Biotite-quartz schist (bbs).—Three areas, one at and west of Thornton, one west of Randall Pond, and a third along Furnace Hill Brook near the southwest corner of the quadrangle, are underlain by various metamorphic, sedimentary, and igneous rocks of the Blackstone series that are mapped together as biotite-quartz schist. Interbedded with biotite-quartz schist and included in the same map unit are quartz-mica schist, chlorite schist, amphibole schist, marble, and quartzite. Different beds are composed of different proportions of biotite, chlorite, amphibole, epidote, quartz, muscovite, and calcite, with minor amounts of magnetite, ilmenite, albite,

and marble, all interbedded on too small a scale to be shown separately on the map. Greenstone seems especially abundant in the Providence quadrangle, but there are also many outcrops of chlorite-quartz schist, amphibole schist, mica schist, quartzite and feldspathic schist. Lenses of marble and small masses of serpentine are exposed in a few places. Excavation for a system of sewers in North Providence exposed several of these types of rocks as well as veins of asbestos (Bryant, 1940) and of talc.

Feldspathic schist (bfs).—Between Centerdale and Wenscott Reservoir are several small ridges of feldspathic schist with interbeds of quartzite, all included in the Sneech Pond schist. The rock is chiefly gray to light-gray, medium- to coarse-grained, streaky feldspathic schist. It is composed of quartz, oligoclase, biotite, and muscovite, with minor amounts of calcite, sphene, epidote, zircon, and apatite. Veins of milky quartz are common.

The belt of feldspathic schist seems not to represent a definite stratigraphic unit of the Sneech Pond schist, as the feldspathic rocks are not limited to definite beds or zones. Apparently a vaguely defined zone containing abundant quartzite beds was permeated by solutions that resulted in partial replacement of the rocks by feldspar. The reasons for this interpretation are the microscopic evidence of replacement by feldspar, the irregular shape of the area of feldspathic schist, and the fact that the borders of the feldspathic rock are partly discordant to the bedding. The feldspathic schist is apparently near the top of the Sneech Pond schist of the

f Centerdale, are also in-
ı the quartz diorite. The
gray to dark gray, medium
. porphyritic, and generally
nd even grained except
ıre it is foliated and por-
e rock just east of Wenscott
.s finer grained and more
an in other parts of the
. The foliation seems to be
ucture. Oligoclase partly
pidote and muscovite is the
tituent comprising about
rock; other major constitu-
nterstitial quartz, micro-
otite in streaks and patches,
ıd chlorite. Minor constitu-
.e sphene, ilmenite, apatite,
allanite, zircon, and garnet.
e bodies of quartz diorite
scordantly the Blackstone
body just south of Thornton
e into the diorite at Ferry
quartz diorite at Wenscott
was intruded by the Grant
ɔdiorite (Quinn, et al., 1948;
: quartz diorite at Thornton
ʳ is overlain unconformably
'ennsylvanian sedimentary

MILLS GRANODIORITE (gg)

Mills granodiorite occupies a
ı extending from the Paw-
ıadrangle into the north-
part of the Providence
le and a smaller area in the
Knightsville. It forms rather
both northeast of Geneva
ı just west of Knightsville.
is gray to greenish-gray,
ic, massive to foliated and
anodiorite. It consists chiefly
ɔligoclase (28 to 34 percent),
ɜ microperthite (22 to 38 per-
phenocrysts, quartz (18 to
.t), and biotite (6 to 15 per-
h minor amounts of sphene,
ıpatite, garnet, chlorite, epi-
gnetite, calcite, zircon, and
The plagioclase has been
tered to epidote and mus-

are quadrangles, ...
therefore it has been assigned to the Devonian(?) system or older (Quinn, Jaffe, Smith, and Waring, 1957).

ESMOND GRANITE (eg)

The Esmond granite underlies an area at the northwest corner of the quadrangle and two smaller areas near the southwest corner. The northwest area is the termination of a band of outcrop area, 10 miles long and 3 miles wide, that extends northwestward through the North Scituate quadrangle (Quinn, 1951), the Pawtucket quadrangle (Quinn, et al., 1948; 1949), and the Georgiaville quadrangle (Richmond, 1952) to Woonsocket. The type locality, Esmond, is just across the line in the Georgiaville and the North Scituate quadrangles. Many abandoned quarries in this rock may be seen within a mile of the northwest corner of the Providence quadrangle. The rock is light-gray to light-pink, medium grained massive granite. The main constituents are microperthite (30 to 50 percent), albite (12 to 30 percent), quartz (35 to 45 percent), and biotite (1 to 7 percent) and the minor constituents and accessories include epidote, muscovite, chlorite, ilmenite, sphene, allanite, garnet, zircon, magnetite, and apatite. The plagioclase has been partly altered to epidote and muscovite and the biotite to chlorite.

The Esmond granite is intrusive into, and hence younger than, the Blackstone series, the granite gneiss of Knightsville, and the Scituate granite gneiss (Quinn, 1951). Disoriented inclusions of rocks of the Blackstone series indicate a magmatic origin for the Esmond granite; such inclusions may be seen at a point 2,400 feet south of the north margin and 5,000 feet east of the west margin of the quadrangle.

PENNSYLVANIAN ROCKS OF THE NARRAGANSETT BASIN

The bedrock of the eastern two-thirds of the Providence quadrangle,

Squantum
Island and the
light-gray coarse-grained
and conglomerate.

A railroad tunnel that ex
than 5,000 feet eastward fr
just east of the center of Pr
the Seekonk River was
during 1906 to 1908 mostl
sylvanian bedrock; a tota
600 feet was dug in glacial d
at the two ends but also j
the buildings of Brown
This tunnel is completely
concrete, but samples tak
fessor C. W. Brown during
have been kept at Brown
The rock is typical of the Rl
formation and includes gr
sandstone, shale, and meta-
with numerous quartz vei
tailed record of the geologi
of the beds was kept.

In 1954-55 a tunnel of the
Valley sewer project (
Valley Intercepter, Section
8 feet) was driven from a
feet northwest of Bensley
5,000 feet S. 70°W. The we
feet of tunnel is mainly in
to black sandstone and
such complex folding and f
an accurate measurement
ness of the strata was not p
eastern part, almost 3,9
tunnel and trench, pene
that dip mostly east and
have a simple enough struc
was possible to measure

Measured stratigra
Description of sec
Youngest (east end of se Greenish-gray to grayi grained sandstone, fine-grained conglor Greenish-gray to dar

4-32

Table 1201
PRESUMPTIVE SURFACE BEARING VALUES OF FOUNDATION MATERIALS

	Class of material	Tons per square foot
1.	Massive crystalline bedrock including granite, diorite, gneiss, trap rock, hard limestone and dolomite	100
2.	Foliated rock including bedded limestone, schist and slate in sound condition	40
3.	Sedimentary rock including hard shales, sandstones, and thoroughly-cemented conglomerates	25
4.	Soft or broken bedrock (excluding shale), and soft limestone	10
5.	Compacted, partially-cemented gravels, and sand and hardpan overlying rock	10
6.	Gravel and sand-gravel mixtures	6
7.	Loose gravel, hard dry clay, compact coarse sand, and soft shales	4
8.	Loose, coarse sand and sand-gravel mixtures and compact fine sand (confined)	3
9.	Loose medium sand (confined), stiff clay	2
10.	Soft broken shale, soft clay	1.5

Note a. 1 ton per square foot = 9765 kg/m².

SECTION 1202.0 FOUNDATION INVESTIGATIONS

1202.1 When required: In the absence of satisfactory data from immediately adjacent areas, the owner or applicant shall make borings, test pits, or other soil investigations at such locations and to sufficient depths of the bearing materials to the satisfaction of the code official. For all buildings which are more than three stories or 40 feet (12192 mm) in height, and whenever it is proposed to use float, mat or any type of deep foundation, there shall be at least one exploratory boring to rock or to an adequate depth below the loadbearing strata for every 2,500 square feet (232.5 m²) of built-over area, and such additional tests that the code official requires. Where the safe sustaining power of the soil is in doubt, or superior bearing value than specified in this code is claimed, the code official shall direct that the necessary borings or tests be made.

1202.2 Soil samples: Samples of the strata penetrated in test borings or test pits, representing the natural disposition and conditions at the site, shall be available for examination by the code official. Wash or bucket samples shall not be approved.

1202.3 Varying soil values: When test borings indicate nonuniformity of bearing materials, a sufficient number of additional borings shall be made to establish strata levels of equal bearing capacity.

1202.4 Cost of tests: Costs of soil investigations shall be at the expense of the owner.

SECTION 1203.0 SOIL TEST PROCEDURE

1203.1 Soil test method: The test procedure and testing apparatus shall be

4-33

Table 1804.3
ALLOWABLE BEARING PRESSURES FOR FOUNDATION MATERIALS

Material Class	Description	Notes	Consistency in Place[1]	Allowable Net Bearing Pressure (tons/ft^2)
1a	Massive bedrock: Granite, diorite gabbro, basalt, gneiss	3	Hard, sound rock, minor jointing	100
1b	Quartzite, well cemented conglomerate	3	Hard, sound rock moderate jointing	60
2	Foliated bedrock: slate, schist	3	Medium hard rock, minor jointing	40
3	Sedimentary bedrock: cementation shale, siltstone, sandstone, limestone, dolomite, conglomerate	3, 4	Soft rock, moderate jointing	20
4	Weakly cemented sedimentary bedrock: compaction shale or other similar rock in sound condition	3	Very soft rock	10
5	Weathered bedrock: any of the above except shale.	3, 5	Very soft rock, weathered and/or major jointing and fracturing	8
6	Slightly cemented sand and/or gravel, glacial till (basal or lodgement), hardpan	7,8	Very dense	10
7	Gravel, widely graded sand and gravel; and granular ablation till	6, 7, 8	Very dense Dense Medium dense Loose Very loose	8 6 4 2 Note 11
8	Sands and non-plastic silty sands with little or no gravel (except for Class 9 materials)	6, 7, 8, 9	Dense Medium dense Loose Very loose	4 3 2 Note 11
9	Fine sand, silty fine sand, and non-plastic inorganic silt	6, 7, 9	Dense Medium dense Loose Very loose	3 2 1 Note 11
10	Inorganic sandy or silty clay, clayey sand, clayey silt, clay, or varved clay; low to high plasticity	5, 6, 10	Hard Stiff Medium Soft	4 2 1 Note 11
11	Organic soils: peat, organic silt, organic clay	11	_____	Note 11

Notes for Table 1804.3:

1. Refer to commentary in Appendix D regarding typical index test values that may be helpful as guides for evaluation of consistency in place.
2. Refer to 780 CMR 1807.0 for determination of design loads and for special cases.
3. The allowable bearing pressures may be increased by an amount equal to 10% for each foot of depth below the surface of sound rock; however, the increase shall not exceed two times the value given in the table.
4. For limestone and dolomite, the bearing pressures given are acceptable only if an exploration program performed under the direction of a *registered design professional* demonstrates that there are no cavities within the zone of influence of the foundations. If cavities exist, a special study of the foundation conditions is required.
5. Weathered shale and/or weathered compaction shale shall be included in Material Class 10. Other highly weathered rocks and/or residual soils shall be treated as soil under the appropriate description in Material Classes 6 to 10. Where the transition between residual soil and bedrock is gradual, a *registered design professional* shall make a judgment as to the appropriate bearing pressure.
6. Settlement analyses in accordance with 780 CMR 1805.5 should be performed if the ability of a given structure to tolerate settlements is in question, particularly for, but not limited to, soft or very soft clays and silts and loose granular materials.
7. Allowable bearing pressures may be increased by an amount equal to 5% for each foot of depth of the bearing area below the minimum required in 780 CMR 1806.0; however, the bearing pressure shall not exceed two times the value given in the table. For foundation bearing areas having a least lateral dimension smaller than three feet, the allowable bearing pressure shall be ⅓ of the tabulated value times the least dimension in feet.
8. Refer to 780 CMR1804.3 when these materials are used as compacted fills.
9. These materials are subject to the provisions in 780 CMR 1805.3 (Liquefaction).

Limits of Excavation Downstream of Dam.

Based on [5] (pages 44 and 45) there may be up to 2 to 4 feet of soil below the timber cribbing for the timber dam. There is no documentation of the results of test augers performed at the toe of the dam. The conclusion regarding depth of soil below the dam appears to be based on the boring logs upstream of the dam.

In boring B-1 located behind the dam at the centerline, the boring notes a wood plank at the top of the rock. B-2 is located behind the dam near the right abutment, the boring notes a wood plank approximately 1 foot above the top of rock. Blow counts below the plank are N =32 (medium dense sand and gravel). Boring B-3 is located upstream of the dam and may be located in a historic sediment area outside of the river channel. Both borings B-4 and B-5 are downstream of the dam outside of the river channel in the left abutment. Both borings encountered medium dense to dense sands and gravels with high SPT values in the foot or so above refusal.

Borings from [3] also have high blow counts in the material immediately above the rock.

Based on B-1 and B-2 the timber cribbing appears to be founded on the rock or on dense sand and gravel above the rock. The dam is buttressed with the buttresses reacting against the mat (cribbing) at the toe. A 1-inch-thick timber mat would need a dense material or bedrock in order to provide adequate bearing capacity at the toe. The stiffness of the mat would not transfer load any significant distance beyond the face of the dam.

In order to minimize the distance that the new dam moves downstream, offset the heel of the new dam 1'-0" (at crest) of downstream face of the old dam. This will require cutting some of the timbers beyond the toe of the dam. It is anticipated that the material under the timbers will support a near vertical cut.

The use of additional shoring or underpinning will be evaluated in the field by the engineer based on observed conditions and elevations of rock.

Associates, Inc.
Structural
Environmental Engineers

[5] 4-35

Geotechnical Engineering Report
Allendale Dam
N. Providence, Rhode Island

February 19, 1993
Project No. 934-RI

I. Subsurface Investigation

A total of five (5) test borings and five (5) hand augerings were performed by Enviro-Tech Drilling, Inc. and monitored by Dr. Mark Liao, P.E., of Liao Associates, Inc. from January 27 to January 29, 1993. The boring/augering locations are shown in Figure 1, and the boring logs are included in this report. Continuous sampling was performed in each of the test borings to refusal. In addition, boreholes B-1 and B-2 were advanced to 4 feet into rock formation through rock coring. After completion of each test boring, the borehole was grouted with a mixture of cement and bentonite slurry.

Hand augering was performed in five locations (see Figure 1) to obtain additional information for this study. Borehole HA-1 was advanced to about five feet below the water line. No clay material was observed to be present in the fill behind the wood dam. HA-2 and HA-3 were advanced to about 12 inches into the pond sediments. Organic silt and peat were found in these locations. HA-4 and HA-5 were performed at the toe of the wood dam. A mat of wood planks was noticed to be underlying the base of the wood dam. Because of the scouring effects, the surface of the wood mat was exposed in several locations near the toe of the dam.

The wood mat was encountered at B-1 and B-2 at approximately the same elevation. The wood mat encountered at B-2 was rotten and was easily penetrated by the drilling rig. The wood mat appears to extend in the down stream and up stream directions. However, the actual area covered by the wood mat is not known

Sieve analysis was performed on six soil samples obtained from boreholes B-1, B-2, and B-3. The test results of these soil samples are summarized in the accompanying grain size distribution curves. The test results indicate that the materials behind the wood dam are gravelly sand and sandy gravel. These materials are highly permeable.

[5] 4-36

Based on the test boring results, three cross sections are prepared and presented in Figure 2. The boring results indicate that rock surface varies between El.78' and El.80', ~~which is about~~ 2' to 4' below the existing wood mat. The soil between the wood mat and the rock surface is gravelly sand with some silt. The permeability of such soil is expected to be high.

It should be noted that during rock coring at B-2, a loss of return water at depth of about 15 feet below grade (or at El.76.6') was noticed. By examining the recovered rock samples, it appears that a granite rock about 16 inches in thickness overlies a schist formation. The granite rock sample may come from a granite boulder or a thin layer of granite formation. The interface between the granite and schist was filled with soil and appeared to be highly weathered. The thickness of this interface is about 6 to 12 inches.

II. Engineering Considerations

A. Stability of Wood Dam

The stability of the wood dam under current (normal) and high water levels were analyzed based on the profiles and acting forces shown in Figure 3 and Figure 4. Since actual dimensions and physical conditions of the underlying wood mat are not available, several assumptions are made in order to perform the analysis.

It is assumed that the wood mat extends 15 feet up stream from the toe of the wood dam and the connections between the wood dam and the wood mat are effective. Under such assumptions, the safety factors of the wood dam against sliding under normal and high water levels are 1.27 and 1.03, respectively. The safety factors against overturn under both water levels are greater than 5. The safety factors would increase if the wood mat extends more than the assumed 15 feet in the up stream direction. To ensure the stability of the dam, a safety factor of 1.5 or greater is desirable.

The fact that timber members and wood planks supporting the gravel fill are rotten suggests that effective connections of the members are questionable. From the acting force diagrams shown in Figure 3 and Figure 4, it is clear that the loss of the connections between the wood dam and the underlying wood mat would cause the wood dam to slide at its base.

Seepage Evaluation:

From [5] the soil under the mat is expected to be highly permeable. The soils in the embankment behind the mat are sands and gravels with some silts noted.

From [8] (see page 4-29) the bedrock is considered massive to thin bedded with schist dipping at 45 degrees. Outcrops observed at the site (page 4-21) appear massive with minimum jointing. A weathered joint was observed in B-2.

Given the permeable nature of the soils under the dam and in the embankment, it is likely that seepage flow through the dam was controlled by flow under the dam, through the abutment, or through the timber plank seams.

The new dam will be built on the bedrock. The dam footing will be anchored into the rock use mechanically anchored rock bolts. This will compress the rock mass and tend to close any joints that may exist. The dam is attached to the foundation using waterstops.

The new right abutment wall consists of an extension of the dam into the existing abutment to a depth where the top of the dam meets existing grade.

Based on these features it appears that the new dam will be less permeable than the old structure.

OKAY ✓

An additional feature is a layer of lean concrete placed over the heel of the new dam. The purpose of the lean concrete is to provide fill between the new dam and old dam that will support the old dam buttresses, and provide encapsulation of the anchor heads. It will also provide a layer of low permeability material between the heel of the foundation and the existing dam.

SECTION 5

Stream Diversion:

References:

[1] GEI Consultants, Inc., 1995 Technical Design Memorandum No 5.3 – Cedar Run Dam, October , 1995.

[2] USACE (U.S. Army Corp of Engineers), 1995b. Design Calculations (Portions of original design provided by USACE under cover letter dated June 12, 2001), Calculations dated November and December, 1995.

[3] USACE (U.S. Army Corp of Engineers), 1997. Contract Documents (11 – Drawings and Specifications) Reconstruction of Allendale Dam (Provided by USACE), Drawings dated July, 1997.

Original Design.

From [3] the original design included two phases. During Phase II the stream diversion plan can pass between a 1-year and 2-year frequency storm event (see page 5-2). The physical constraints of the site limit protection against higher flows.

From [1] a variety of references provide recommendations for selection of a storm event recurrence interval for flood protection (see page 5-3). These recommendations range from 5 to 25 times the duration of construction.

Estimated duration of Phase II construction is 2 months. Protecting against a one-year storm event would provide 6 times the construction interval. Given constraints of the site, the protection provided by the stream diversion plan appear reasonable.

This storm protection level was also discussed with USCAE and EPA personnel on a telephone conference call.

performed within this cofferdammed area shall be performed during this phase, as specified in other sections of the specifications.

3.1.2 Phase II

Phase II construction, as shown on the contract drawings, provides for construction of cofferdams to divert the Woonasquatucket River through the modified concrete gate structure. Phase II includes raised and extended Phase I cofferdams constructed of earth, precast concrete blocks, and precast concrete barriers. These cofferdams will be constructed to the elevations shown on the contract drawings. Slope protection and seepage control measures shall be provided in accordance with the approved design. All remaining excavation and new construction to be performed within this cofferdammed area shall be performed during this phase, as specified in other sections of the specifications.

Approximately 350 cubic feet per second (cfs) can be discharged through the modified gate structure without overtopping the Phase II cofferdam. This discharge is between a 1-year (230 cfs) and a 2-year (590 cfs) frequency storm event. The table below presents monthly mean discharges at the centerdale gage, 0.7 miles upstream of the Allendale Dam.

MONTHLY MEAN DISCHARGE AT CENTERDALE GAGE
(0.7 mile upstream of Allendale Dam)
(Period of Record: Water Years 1941 - 1994)

Month	Oct	Nov	Dec	Jan	Feb	Mar
Mean (cfs)	38.6	58.4	84.5	92.0	103	142
Month	Apr	May	Jun	Jul	Aug	Sep
Mean (cfs)	131	86.3	55.5	31.1	29.5	30.0

3.2 DEWATERING

The areas within the cofferdams and all excavation areas therein shall be dewatered and maintained in a dry condition to the extent required to construct the work in accordance with all applicable provisions in other sections of the specifications.

3.3 EMERGENCY BREACHING AND REMOVAL OF COFFERDAMS

During all time periods when cofferdams and diversion systems are in operation, the Contractor shall provide and maintain at the site suitable equipment for the breaching of cofferdams and removal of equipment for the passage of flood flows. The breaching and removal of cofferdams shall be done only at the direction of, or with the approval of, the Contracting Officer.

3.4 MAINTENANCE

The Contractor shall continuously monitor all cofferdams for evidence of movement, erosion, deterioration, and excessive seepage throughout their use. The cofferdams and diversion channels shall be maintained in good working order as directed and as necessary for the safety of workmen and the protection of the permanent work.

-- End of Section --

diversion using this approach become 1) development of a practical flood protection plan upon which a reasonable engineer's cost opinion can be developed, and 2) developing a suggestive stream diversion plan for inclusion in the construction contract drawings and specifications. Both of these issues must be based on the required level of flood protection determined to be appropriate by the owner and specified in the construction documents. The principal benefit of this approach is a lower bid proposal from the contractor.

A third approach would be to include a detailed design of required stream diversion facilities in the construction drawings. In this case, the contractor's responsibility and liability would be limited to the proper construction and maintenance of the stream diversion facilities, and for its personnel and equipment. By including the stream diversion design in the construction documents, the owner would assume the responsibility and liability for any flood damages which are not caused by the contractor's failure to properly construct or maintain the required stream diversion facilities. This type of arrangement would be particularly suited to stream diversion facilities which are planned to be an integral part of the permanent dam facilities.

Regardless of the selected contractual approach, the first issue to be resolved is the selection of the appropriate level of flood protection to be provided as the basis for development of diversion concepts and engineer's cost opinions. Various opinions exist regarding the appropriate level of flood protection for construction of a concrete dam. Hansen and Reinhardt [6] suggest that protection should be provided for floods having a recurrence interval on the order of five times the period of construction. Other sources suggest providing protection for floods having a recurrence interval of five to 25 years [7,8,9,10]. For Cedar Run Dam No. 6, Hansen and Reinhardt's criteria would suggest that flood protection for the 10-year event would be reasonable, assuming a construction period for the entire project of about two years.

Only the portion of the dam which is within the stream bed will require protection from flooding. This portion consists primarily of the principal spillway, the RCC dam section, and the emergency spillway stilling basin. This work could probably be substantially completed within a single construction season, indicating that protection from a 5-year event would be appropriate. Another important factor to consider is the consequence, to the work and downstream, of a flood event greater than the design event. In contrast to an embankment dam, a conventional concrete or RCC dam can often withstand overtopping during construction with little or no significant impact. There are documented cases of RCC dams which were overtopped during construction with little adverse effect [6]. Diversion plans which include earthen cofferdams could have significant downstream impacts if the cofferdam were to fail during a flood event higher than the design flood. The potential downstream consequences due to cofferdam failure increase as the cofferdam height and/or storage volume requirements increase for protection of the work for larger inflow events. This would suggest that diversion plans which employ relatively high cofferdams and/or large flood storage requirements should be avoided.

In consideration of the various issues discussed in the preceding paragraph, stream diversion concepts and comparative cost analyses developed for this TM are based on providing the following minimum levels of flood protection:

August 6, 2001

US Army Corps of Engineers
New England District
696 Virginia Road
Concord, MA 01742-2751

Attn: Laureen Borochaner, P.E.

RE: Responses to Comments - Implementation Work Plan
Centredale Manor Restoration Superfund Site
North Providence, Rhode Island

Dear Ms. Borochaner:

Loureiro Engineering Associates, Inc. (LEA) on behalf of the Centredale Manor Performing Parties Group has prepared this letter in response to the comments received from your office on July 25, 2001 after review of the Implementation Work Plan for the Centredale Manor Restoration Superfund Site in North Providence, Rhode Island. The letter is organized to restate the USACE and EPA comments in bold with the response immediately following.

USACE COMMENTS

Reviewer: Scott C. Michalak

1. General Please clarify why dry decontamination was selected for dioxin contaminated soils. With dioxins would it not be better to use water as a decontamination medium such that the particulate does not become airborne. Using water will increase the need for defrac tanks and storage of liquids.

LEA has revised the Work Plan and Health and Safety Plan (HASP) to reflect a combination of dry and wet decon of equipment and vehicles to minimize any airborne material. First, wet and moist soil material that should not become airborne will be scraped and brushed off the equipment directly into the bucket of the loader or the roll-off container provided for each action area. Then, the buckets of each piece of equipment will be washed directly over each roll-off container or in a temporary decon pad constructed within the CRZ of each area. The sediment and rinsewater collected will be placed into the roll-off container for off-site disposal.

2. Pg. 2-1 §2.2 Clarify the vertical limit below the 1-ft water elevation. Currently it reads XX.X-foot elevation.

After a thorough review of the historical documents, an accurate elevation could not be determined for the spillway associated with Lymansville Dam. Therefore, the text of the Work Plan has been modified to state that the surveyor will determine the elevation of the lowest point over the spillway and the elevation at one-foot below the spillway elevation will be staked in the proposed action areas associated with Lymansville Pond. This will ensure that the correct elevation is used to survey the lower limit of the excavation areas.

3. Pg. 3-1 §3.1 It states that of the 57 letters sent out only three owners denied access in the 2nd sentence. However, if a signed access agreement has not been received then there is no access granted. Hence, the 12 no responses that currently exist can only be interpreted to mean that there is no access agreement and thus, LEA cannot access the property. Please clarify the section so that it is clear on where access has been granted. Additionally, Tables 3-1 and 3-2 should be indicated what the shaded rows mean.

The text of the Work Plan has been modified to clarify the current status of access agreements at the Site. At this time, there is only one critical property that the LEA has not received approval for access. This property is the Scott Property at 2 Mill Street. The homeowner has indicated that his lawyer is still reviewing the agreement and will get back to LEA with a response or additional questions.

The Tables 3-1 and 3-2 have been modified to reflect the changes to the status of the access agreements. In addition, a note explaining the shaded rows indicate access for these properties is neither approved or denied has been added to each table. The phone numbers for each of the property owners have also been removed from the tables.

4. Pg. 3-3 §3.4.3 In this section, it states that the bridge spanning the river at Allendale Way has a 8-ton load restriction. However, the Drawings state a 10-ton load limit. Please clarify and correct where appropriate.

The weight limit identified on the drawings was the weight limit provided by the USACE for the bridges. The text of the Work Plan identified the weight limit as 8-tons based on a conversation that LEA had with Mario Libutti from the Town Asphalt Company, the property adjacent to the dam. In an order to be safe, the 8-ton weight limit will be identified on the drawings.

5. Pg 4-1 §4.1.1 In this section it states soil and sediment will placed in a dump truck and transported to the hazardous waste storage area. Then subsequently it states that the materials will be stabilized in the excavation and then loaded into roll off containers. Please clarify how the hazardous

soil and sediment will be handled. Additionally in the specification section, there is no specification for the stabilization of soils. Please add appropriate specification section.

The text of the Work Plan has been corrected to remove the reference to a dump truck. The soil will be loaded into a roll-off container or lift liner and transported to the soil staging area prior to disposal off-site.

Soil stabilization will be performed using sawdust or similar organic material that will not cause a reaction and produce water vapor that may inadvertently expose workers or residents to contamination. A paragraph has been added to the Soil and Sediment Removal Specifications, Section 02220 – Earthwork to address the soil stabilization methods that will be implemented as part of this project.

6. **Pg 4-2 §4.1.2 This section discusses wastewater however it does not discuss where it will be transported to and how it will be treated. Please clarify.**

The Work Plan has been edited to discuss the methods for generating and handling wastewater generated during the excavation of soil and sediment. The text identifies that the water within the cofferdam will be pumped directly from the area to evacuate all of the water from the area. A pump will remain in the cofferdam to control any infiltration of water into the area. The text also discusses when wastewater will be collected as part of the remedial excavation process. It is LEA's intent to minimize the collection of water for off-site disposal. A disposal facility for water containing dioxin still has not been identified.

7. **Pg 4-2 §4.1.3 This section discusses PPE and transportation to Central Landfill. Does Central Landfill accept dioxin waste? An alternative to this may just add the PPE into the roll-offs for incineration. Please clarify.**

The reference to the Central Landfill has been removed from the document. Disposable PPE will be placed into the roll-off containers for off-site disposal with the soil and sediment generated during the removal operations.

8. **Pg. 4-3 §4.2.1 &Figure 4-1 What is the slope of the containment pad (1%, 2%,…)? Additionally, what is the total volume allowed to be stored within this containment pad? Per 40CFR 264.175 (b)(3) the containment system must have sufficient capacity to contain 10% of the volume of the volume of the containers or the volume of the largest container, whichever is greater. However, this is dependent upon the amount of free liquid stored on this pad. Please provide calculation and additional information to clarify that his does meet the CFR.**

A note will be placed on the Figure 4-1 that identifies the slope of the concrete slab at 2% to the sump in the corner of the containment pad.

LEA does not intend to store liquid waste in the containment area. The second sentence that follows the quoted regulation in the comment states that: "Containers that do not contain free liquids need not be considered in this determination." The containment area has been designed to contain four roll-off containers. The size of each roll-off is approximately 8 feet wide by 20 feet long. The pad has been designed to sufficiently hold the four roll-off containers. Any liquid waste that is generated that will require storage will be placed into a locked steel storage container approximately 8 feet wide by 20 feet long. The drums will be placed on a 4 drum skid that has secondary containment. In addition, a liner will be placed in the bottom of the storage container as a second barrier in the event of a drum failure. As stated in the response to comment #6, LEA intends to minimize the amo8unt of water that is collected for off-site disposal.

9. Pg. 4-3 §4.2.2 Is this of sufficient size if there is significant dewatering occurring in excavations or if there is more water generated from decontamination activities?

The text has been clarified to identify the proposed size of the container at 8 feet wide by 20 feet long. As stated in previous responses, LEA intends to minimize the amount of wastewater that will be collected for off-site disposal. The text also identifies the installation of a liner in the bottom of the container as a secondary measure to contain any free liquids that may escape the 4 drum pallet containment.

10. Pg 8-1 §8.1.2 Clarify the XX.X-foot elevation in Lymansville Pond

As stated in the response to comment #2, the specific reference to an elevation has been removed from the text and a confirmation of the lowest elevation over the spillway will be surveyed by the surveyor prior to the layout of any of the lower limits of excavation in the proposed action areas.

11. Pg 8-3 §8.2.2 This section discusses stabilization however, there is no project specification for the lime stabilization. Please clarify and amend as appropriate.

As stated in the previous comment #5 response, a paragraph has been added to the Soil and Sediment Removal Specifications, Section 02220 – Earthwork to address the soil stabilization methods that will be implemented as part of this project.

12. Pg 8-5 §8.3.1 This section discusses backfilling with bank run gravel, however the specifications have Make-up material and Process Gravel fill

specified. What will be used to backfill the excavations? Please clarify and update the specifications where appropriate

The soil and Sediment Removal Specifications has been modified to remove any reference to make-up fill or process gravel and replaced by bank run gravel. Bank run gravel will be used to backfill the excavations to 4-inches below previous and existing surrounding grade.

13. Pg 8-5 §8.3.1 This section discusses using a bucket or equipment tracks to compact the backfill and a plate compactor to compact the material. Which method will be used on the project? Please clarify and update the specifications where appropriate

The text of the Work Plan has been edited to remove the reference to a plate compactor.

14. Appendix C Figures Why do the proposed excavation delineation sample locations only sample a portion of the proposed TTNUS excavation areas? Please clarify.

Based on comments from USACE and USEPA, additional sample locations have been added at ten-foot intervals along the banks of each of the Action Areas, which are depicted on the revised Figures 1-1 through 1-7 and Figures 1-9 through 1-12. These additional sample locations extend to the limits of the excavation areas identified in the TTNUS EE/CA.

15. Appendix D Pg ix Correct the distribution list entry for Laureen Borochaner to read: Laureen Borochaner, USACE (Project Manager)

The text of the QAPP has been modified to address this comment.

16. Appendix E Section 01010 Part 1 A general rework of these paragraphs is needed so that it describes the current site and not Pratt Whitney in East Hartford

The text of the Soil and Sediment Removal Specifications have been modified to address this comment.

17. Appendix E Section 01010 Part 1.1 Please correct all references to make-up fill material. Because in Section 02220 there are material specifications for a make-up fill and a process gravel and in the text portion of the work plan it states excavations will be backfilled with bank run gravel (Refer to Comment 12). One nomenclature should probably be used for clarity purposes.

As identified in the previous response to comment #12, the soil and Sediment Removal Specifications has been modified to remove any reference to make-up fill or process gravel and replaced by bank run gravel.

18. Appendix E Section 02220 Part 2.1 For the topsoil specification, the organic content seems low. USACE usually specifies an organic content of between 5 and 20%. Additionally, USACE specifies that the pH be between 6.0 and 7.5. Thus, USACE recommends that the topsoil be specified as above to provide an improved growing medium for the grass.

The specification section has been modified to increase the organic content of the specified topsoil and a range for the required soil pH.

19. Appendix F Section 02220 All backfill materials should be tested for chemical contamination.

Paragraph 2.2 identifies the requirement for chemically testing any borrow material that will be delivered to the site.

20. Allendale Dam Drawings C-6 and C-7 Need to indicate final elevation of gravel cofferdams on final grading plans (Drawings C-6 and C-7) after completion of work on dam.

The drawings have been edited to show that a maximum of 6-inches of gravel will be left in place at the completion of the cofferdam removal.

Reviewer: Mark Vance

1. Dam Design The selected dam design is highly dependent on rock anchors for overall stability. The performance and safety of the dam structure is directly related to the satisfactory installation of these anchors. It is *very important* that the GEI design engineer be on-site during critical construction phases to validate the rock anchor design since very limited data was available during the design phase of this project . Specifically the bedrock type and quality, rock surface preparation prior to placement of concrete footing, test rock coring, anchor installation, and proof testing are required to be verified / approved during construction.

GEI will observe all of the bedrock foundation material prior to construction of the dam. It is our opinion that the rock anchor design would work in poor quality to severely weathered rock. Hence, we do not anticipate changes based on rock quality. GEI will also observe the installation and testing of all of the rock anchors.

2. Anchor Design The design report states that a mechanical rock anchor will be used, but includes calculations for a grouted anchor bond length as well. What is the rational for selecting a mechanical rock anchor? If actual bedrock conditions do not meet the assumed design condition of a hard, intact, and massive rock formation, a fully grouted anchor design may be required. Borings B-1 and B-2 indicate that the bedrock may be a jointed schist.

Mechanical anchors were selected for corrosion protection. The anchor is preloaded to the lock off load, then the anchor is grouted into place. If mechanical anchors will not work the bar can be grouted into the rock using a ten-foot bond zone. If the anchor is grouted the free length will be post grouted after the anchor has been locked off.

Specifications

3. 02110-3.1 States that the top 18-inches of the existing dam shall be removed during grubbing operations. The drawings indicate that the top 2-feet of the wooden spillway is to be removed. The specs and drawings should be consistent

The documents have been edited to be consistent and identify 2 feet will be removed from the top of the existing dam.

4 02227-1.2 Reference is made to section 02278, "Stone Protection". This section missing from the specifications.

A section for stone protection has been included in the specifications.

5. 02272-2.1 States that a 3-inch dia anchor bar will be used. The design and drawings indicate only a 2-inch anchor. The specs and drawings should be consistent.

The specification shall be edited to be consustent with the drawings and calculations. The anchors will be 2-inch in diameter.

6. 02272-3.2. Include details for required pressure testing and pre-grouting

A section identifying the required testing has been added to the specifications.

7. Specs missing for: stone protection, granite block wall reconstruction, lean concrete fill

These sections have been added to the specifications.

Drawings

8. Sheet C-6 Include sequence for backfilling behind new dam. Is lean concrete placed by tremie or in dry? Gravel fill will be placed in the wet if removing cofferdam for the material. Upstream cofferdam is to far from new dam to place gravel fill directly from cofferdam.

Lean concrete will be placed in the dry before removal of cofferdam. Cofferdam can be placed wet or dry. The location of the cofferdam may be adjusted in the field to allow for removing and replacing the cofferdam material behind the dam as fill.

9. Sheet C-7 Section shows removing most of existing structure. Why?

The drawings have been modified to show that as little as possible of the structure shall be removed.

10. Sheet S-1 Anchor spacing shown as 6-feet, should be 5-feet. Anchor bar shown as 90ksi, should be 300 kip ultimate. Note 3 states concrete is 4000 psi, should be 5000 psi

The notes and dimensions have been edited to reflect changes to the drawing consistent with this comment.

Other Comments Discussed at 20 July 2001 Project Review Meeting

Anchor

10. Any conditions observed in the field during construction that could affect the dam/anchor design shall be discussed with the Corps of Engineers.

GEI Consultants, Inc. (GEI) agrees with the comment.

11. GEI shall review/approve all construction submittals from the Contractor related to work on the dam/anchors.

GEI agrees with the comment.

12. Final as-built data for the dam/anchors shall be included in the project completion report.

GEI agrees with the comment.

13. The single planned bedrock core hole during the initial construction phase shall be pressure tested. If bedrock conditions do not appear uniform after excavation, additional bedrock core holes and pressure testing shall be accomplished.

GEI agrees with the comment.

14. A field installation log shall be completed for each anchor installed. All drilling and installation information shall be included in the log (ie. rate of advance, driller comments, apparent loss of drill water, description of rock cuttings, …).

GEI agrees with the comment.

15. Include specification requirements for the filter fabric to be placed under the cofferdams.

Requirements for the filter fabric have been included in the specifications.

16. All off-site fill materials shall be chemically tested prior to use in the work to insure they are clean materials.

As previously identified, all borrow material that will be used at the Site will be chemically tested prior to delivery.

17. Excavation dewatering activities shall include adequate testing and treatment measures.

At the completion of the installation of the cofferdams, all of the water will be pumped from within the area to allow for the excavation of material in the dry. During the excavation of the soil and sediment associated with the dam installation, any water removed from the excavation area will be collected into a frac tank, treated to remove any sediment and discharged upstream of the upstream cofferdam. LEA does not intend to perform any testing of the treated water prior to discharge.

18. The cutting of any tree on the earth dam embankment shall require complete removal of the stump and compacted backfill of the stump hole with material similar to the existing soils.

Any trees removed as part of the dam reconstruction shall be grubbed and the subsequent hole will be backfilled, compacted and restored.

Reviewer: Patricia Sumner

Document: Design Work Plan

1. **Page 3-2, Section 3.3 Work Zones – This section identifies utilizing dry decontamination methods for equipment. This would seem to be ineffective since a majority of the work will be performed in wet areas.**

   LEA has revised the Work Plan and Health and Safety Plan (HASP) to reflect a combination of dry and wet decon of equipment and vehicles to minimize any airborne material. First, wet and moist soil material that should not become airborne will be scraped and brushed off the equipment directly into the bucket of the loader or the roll-off container provided for each action area. Then, the buckets of each piece of equipment will be washed directly over each roll-off container or in a temporary decon pad constructed within the CRZ of each area. The sediment and rinsewater collected will be placed into the roll-off container for off-site disposal.

2. **Page 3-4, Section 3.6 Decontamination Facilities – See comment 1.**

   A description of the temporary decontamination pad has been provided in the Work Plan.

3. **Page 4-2, Section 4.1.3 Disposable PPE – This section identifies disposal of spent PPE at the RI Central Landfill. Is this appropriate?**

   As previously stated, the disposable PPE will be placed directly into the roll-off containers associated with each action area and disposed off-site with the soil and sediment.

4. **Page 7-3, Section 7.7 RI Air Pollution Control Regulation #5, Fugitive Dust – This section states that dirt that accumulates on roadways will be swept from the asphalt surfaces. Sweeping potentially contaminated materials off of surfaces could pose respiratory hazards and is not advisable. The Contractor should look into alternate methods to keep the roadways free from dirt.**

   The HASP specifies decon to remove contaminated soil from vehicles and equipment. They will then be inspected in the CRZ after decon to assure that they don't track soil onto highways. There will also be watering and/or chemical control of surfaces on site to help prevent dust from getting on the highways. In the event that dust gets on the highway, wet sweeping can be used to clean it up.

5. **Page 8-1, Section 8.1 Site Preparation and Mobilization – This section identifies the use of a fork truck to move roll-off containers. This activity should be performed with a roll-off truck.**

   The text of the Work Plan has been modified to remove the fork truck reference.

6. **Page 8-4, Section 8.2.5 On-Site Soil and Sediment Transport – See Comment 5.**

   The text of the Work Plan has been modified to remove the fork truck reference.

7. **Page 8-5, section 8.2.7 Soil and Sediment Transportation and Disposal – This section should also include Canadian paperwork as well as the RI Uniform Hazardous Waste Manifest.**

   The requirement for Canadian manifests has been added to the text.

8. **Page 12-5, Section 12.2.1.4 Off-Site Responders – The 24-hr emergency phone numbers to the State and EPA should be added to this list.**

   These numbers have been added to the site HASP.

Document: Site Specific Health and Safety Plan

1. **General Comment - The final Site Safety and Health Plan should be approved by the Safety and Health Manager.**

   Upon review of the final plan, the H & S Manager will sign it.

2. **General Comment – Since a majority of this scope of work requires personnel to work near, in and on the water the plan needs to provide a section specific to boating and water safety.**

   Employees working over or near water will be provided with USCG approved personal flotation devices (PFD's). Employees are required to wear these when working over water that is > 3 feet deep. Ring buoys with at least 90 feet of line will also be available for emergency rescue operations. The distance between ring buoys shall not exceed 200 feet. One lifesaving skiff will be available where employees are working over or adjacent to water. These requirements have been included as part of the HASP.

3. **General Comment – The Plan needs to address a section on confined space entry (CSE) since work inside frac tanks is a possibility.**

   The LEA standard confined space entry procedure from our corporate HASP will be inserted into the Centredale site HASP. This will specify that a permit, attendant and other procedures will be necessary if an employee has to enter a frac-tank, for example.

4. **Page 3-3, Section 3.6 Site Hazard Analysis – Vehicular and Noise hazards should be addressed within the Plan. Has the Contractor looked into the**

City Noise Ordnance to ensure compliance since a majority of the work will be in close proximity to residences?

The site HASP requires that employees follow the LEA corporate hearing conservation program. All employees do have annual hearing tests and PPE is provided. Therefore, the HASP covers employees.

The type of construction equipment we plan to use would comply with environmental noise standards. Historical measurements have indicated that all of the equipment to be utilized at the site produce noise less than the OSHA 90 dBA standard within a few feet of the machines. Since the work will be completed in fenced exclusion zones, the perimeter fencing will provide a buffer zone to ensure that the noise levels well below environmental standards to a person standing at the edge of the fence line.

5. **Page 4-1 Section 4.1.1 Hazardous Soil and Sediment – The use of granular lime is not recommended for the stabilization of wet sediments prior to waste shipment. Lime will cause a large heat of reaction causing steam and potentially site contaminates to become airborne. Due to the close proximity of residence the Contractor should look into alternative solidification materials.**

As stated in the previous comment #5 response, a paragraph has been added to the Soil and Sediment Removal Specifications, Section 02220 – Earthwork to address the soil stabilization methods that will be implemented as part of this project. LEA intends to utilize lime at quantities that will not cause a vapor release. In the event that a suitable quantity of lime an organic material, like saw dust, to stabilize the material.

6. **Page 4-5, Section 4.6.4 Site Evacuation – This section identifies the necessity to perform air monitoring but does not identify the action levels which will trigger a response. The action levels need to be identified.**

We will insert in this section that evacuation will be triggered by the following action levels: VOC's, 5 ppm on the PID; total dust, 5 mg/m3 and respirable dust, 3 mg/m3 both on the dust meter. LEA does not anticipate exceeding the VOC readings on the PID, however, as a safety measure, it is a standard practice for LEA to maintain a PID on-site during construction on any hazardous waste site.

7. **Page 5-1, Section 5.3 Air Monitoring – Why was an action level of 5 ppm selected for VOC's? Why was such a conservative action level of dust monitoring selected?**

As stated in the previous response, the action level for unknown VOC's is LEA's standard trigger level for upgrade of VOCs is 5 ppm as read on the PID until the

VOC can be identified. LEA does not anticipate exceeding the VOC readings on the PID. If the specific VOC's are known, the action level is ½the actual OSHA PEL. For dust, we will insert the action levels for total dust as 5 mg/m3 and respirable dust as 3 mg/m3 both as read on the dust meter.

8. **Page 5-4, Section 5.4.1 Air Monitoring Equipment Specifications – This table identifies utilizing Colorimetric tubes for Sodium Cyanide, is this even a site contaminant? This appears to be a typographical error. This table should also identify monitoring for oxygen, LEL and hydrogen cyanide, along with the monitoring requirements and action levels for personal and areas sampling.**

   This section also identifies the use of personal and area air sampling pumps but does not address what will be sampled and what action levels will be utilized. This needs to be clarified.

   The fixes to the table have been made.

   LEA will insert text identifying that air-sampling pumps may be used for baseline readings and/or to identify specific contaminants of concern (from nonspecific PID or dust meter readings) through lab analysis. The pumps are not intended for personal monitoring.

9. **Page 5-7, Section 5.6 Basic control principles – This section states that the HSO may exempt respirators in excavation areas if PID levels are 0 in the breathing zone. Since VOCs are not a concern on this project why are we utilizing this as a determinant for respiratory protection? The contractor should be utilizing dust levels for up-grade and downgrade decisions.**

   As stated in a previous response, the action level for unknown VOC's is LEA's standard trigger level for upgrade of VOCs is 5 ppm as read on the PID until the VOC can be identified. LEA does not anticipate exceeding the VOC readings on the PID. LEA agrees that the primary determinant will be dust. Action levels for dust included are total dust as 5 mg/m3 and respirable dust as 3 mg/m3 both as read on the dust meter.

10. **Pages 5-11 through 5-13, Personnel Protective Equipment – This whole section needs to be re-evaluated. The requirements for up-grade and downgrade criteria's need to be re-assessed.**

    These pages have been edited to reflect tha actual PPE requirements for the site.

11. **Page 5-16, Noise – See comment 4.**

The type of construction equipment we plan to use would comply with environmental noise standards. Historical measurements have indicated that all of the equipment to be utilized at the site produce noise less than the OSHA 90 dBA standard within a few feet of the machines. Since the work will be completed in fenced exclusion zones, the perimeter fencing will provide a buffer zone to ensure that the noise levels well below environmental standards to a person standing at the edge of the fence line.

12. Page 5-17, Section 5.13 Decontamination – See comment 1 from the Design Work Plan Comments above.

See comment 1 from the Design Work Plan Comments response.

13. Page 5-20, Section 5.13.4 When taking a rest break, follow these procedures, item d – It is recommended that personnel fully doff their PPE when taking a break.

The requirement has been added to the paragraph.

14. Page 5-23, Section 5.14.3 Bloodborne Pathogens – Are your first aid/CPR-trained personnel involved in the bloodborne pathogen program? If so, it should be stated.

The requirement has been added to the paragraph.

15. Page 6-1, Section 6.1 Excavation and Trenching – The Contractor needs to address alternative measures to protect workers besides from sloping the excavation in areas near the dam repair since excavation will take place in wet sediment. Since this dam repairs may require excavations requiring sidewall support this section should address shoring or trench boxes as alternative controls measures.

Due to the depth of the cut and the height of the dam, an open cut will be the method used to excavate the embankment during the construction of the dam.

REVIEWER: Rosemary Schmidt (Geologist, Geology & Chemistry Section, HTRW Branch)

Work Plan:

1. pg 2-1/sctn 2.2 Text states: "The surveyor will also locate the vertical limit below the one-foot water elevation,…" Suggest replacing with "…the horizontal limits of the area which will be below at least one foot of water,…".

The text of the Work Plan has been modified to reflect the suggested change.

2. pg 3-1/sctn 3.1 Access Agreements. Access has not been denied, but has not yet been obtained for twelve of the "critical" properties. Please clarify this in the text. Also, recommend adding discussion of whether/how the lack of some of the access agreements impacts the project. Can the work still go forward? What else can be done?

As stated in a previous response, the text of the Work Plan has been modified to clarify the current status of access agreements at the Site. At this time, there is only one critical property that the LEA has not received approval for access. This property is the Scott Property at 2 Mill Street. The homeowner has indicated that his lawyer is still reviewing the agreement and will get back to LEA with a response or additional questions. LEA anticipates that this one critical access agreement will be obtained in advance of work on the property.

3. pg 3-3/sctn 3.4.3 Construction Material Staging Area. Recommend adding a short discussion of how the bridge weight limits impact the way the work will be done. (Move discussion to Section 3.5 Transportation Routes?)

A clarification of the truck routes has been identified in the specified paragraph. Previous text changes in the document identify that there is a weight limit on the bridges that will not allow for loaded truck traffic. The truck traffic should not be significantly impacted by taking a circuitous route to the roll-off staging area.

4. pg 3-4/sctn 3.6 Decontamination Facilities. Dry decontamination has many issues, as discussed (muddy material, inhalation hazard, etc.). Wheels/tracks of equipment will likely require wet decontamination; revise.

As indicated in a previous response, decon procedures and methods have been clarified in the Work Plan to address previous comments.

5. pg 3-6/sctn 3.7 Management and Personnel. Discuss how the LEA Resident Engineer and LCI Superintendent will interact, if they are not the same person. Will the LEA Resident Engineer direct the sampling work and oversee dam construction? Will the LCI Superintendent direct the excavation activities and dam construction work?

The resident engineer for LEA will provide oversight for the investigation activities to be performed at the same time that the dam is being reconstructed. The resident engineer will also be the inspector and health and safety officer at the site. The LCI superintendent will direct the construction crews directly for the reconstruction of the dam. They will not be the same person. LEA has extensive experience on design build projects utilizing both LEA and LCI personnel working together as teammates to provide a high quality project.

6. pg 4-1/sctn 4.1 Waste Handling and On-Site Transportation. Recommend adding discussion of how excavation equipment (and roll-offs) will be moved between Areas, so as to avoid tracking contaminated materials onto local roads.

Decontamination procedures have been previously discussed and the text of the Work Plan modified to specify the decontamination procedure to be implemented for equipment, personnel, etc.

7. pg 4-2/sctn 4.1.3 Disposable PPE. If unacceptable at Central Landfill, then suggest disposing with contaminated soil.

As discussed in a previous response, any disposable PPE requiring disposal will be placed into roll-off containers for off-site incineration with the soil and sediment.

8. pg 4-3/sctn 4.2.2 Wastewater Storage. Drums will be used on site; suggest having drum-moving equipment on site.

LEA agrees with this comment and a drum trolley will be provided in the storage container for moving drums of liquid waste.

9. pg 4-4/sctn 4.3.2 Dewatering and Decontamination Wastewater. Based on discussions, wastewater from the various operations may require different handling.

Water removed during dewatering prior to excavation could likely be discharged directly to the river.

Water generated from dewatering during excavation should be containerized, and treated prior to discharge to the river.

Water removed from an excavation determined to meet the cleanup level could likely be discharged directly to the river.

Decontamination water will likely require off-site disposal. If a disposal facility can't be identified, other options discussed included adding the decon fluids to the roll-offs. Can additional sorbent material (if not lime – see safety cmts) be added to material once it's in the roll-offs?

The text of the Work Plan has been modified to reflect the suggestions for the various types of wastewater discussed in this comment.

10. pg 7-3/sctn 7.7 RI Air Pollution Control Regulation #5, Fugitive Dust. See cmt 6.

Section 3.6 of the Work Plan addresses the procedures that will be utilized to decontaminate the equipment prior to leaving the exclusion and contaminant reduction zones. By ensuring that all contaminated material has been removed from the equipment and trucks, any dust generated on the road would be non-contaminated material and could be managed by conventional methods including wet sweeping.

11. pg 8-1/sctn 8.1 Site Prep and Mob. See cmt 8.

The text has been modified to include the provision of drum handling equipment.

12. pg 8-1/sctn 8.1.2 Excavation Area Layout. Text states that "approximate boundaries of each excavation in the action areas will be flagged by LEA field personnel. Boundaries will be determined by sample locations where immunoassay results are less than or equal to 500 ppt." As discussed, please provide sketches of proposed excavation limits.

The text has been revised to include the preparation of figures identifying the initial limits of excavation for use as tools to communicate the excavation activities to each of the respective property owners.

13. pg 8-3/sctn 8.2.2 Soil Stabilization. Consider alternatives to lime, as it will generate steam, creating potential inhalation hazard and public perception problem.

Lime or similar material will be used at concentrations that will not produce visible steam or vapor. In the event that a suitable quantity of lime or similar material cannot be used to stabilize the material, an organic material such as sawdust will be used to stabilize the soil. Lime is a much more effective stabilization material and will be preferred over sawdust.

14. pg 9-3/sctn 9.2.2 Granite Wall. Text proposes re-using soil removed from the embankment later as fill in front of the proposed dam structure, as it's assumed that this soil has not contacted contaminated sediment. Recommend testing this material.

The text of the Work Plan has been modified to include stockpiling the material from the embankment on plastic, covered with plastic. Also characterization samples will be collected and analyzed to confirm that the material can be used as fill in front of the dam.

15. pg 12-11/sctn 12.3.7 Evacuation Plan. Suggest adding use of sign-in sheets to determine whether or not all personnel have evacuated the site, or if anyone is missing.

The text of this Section has been modified to include the requirement of a daily sign-in sheet for the Site.

16. pg 15-1/sctn 15 Institutional Control Plans. Please clarify whether or not periodic inspection of structural or geotechnical elements of the dam is part of the negative easement. If the Respondents are responsible only for ensuring that spillway doesn't become plugged with debris (raising the water level and potentially causing the dam to fail), then these other inspection duties fall on someone else. Who is responsible for dam maintenance? Who is responsible for clearing the debris from the spillway?

In the Institutional Controls Plan, the negative easement allows the Performing Parties to perform the inspections stated. Structural (concrete wall) and geotechnical elements (embankment and fill behind dam) of the dam will be inspected visually on a monthly basis in addition to visual inspection of the spillway. Clearing debris and maintenance will be provided by the Performing Parties through a contractor selected to perform the work.

17. Table 10-1 Submittal and Testing Summary. Related to Rock Bolts, Spec Sctn 02272, please add Rock Core Log(s), Rock Anchor Hole Drilling Logs, Pressure Test Results, Pre-Grouting Results.

The table has been updated to include the identified tests and submittals.

Appendix A – Health & Safety Plan

18. pg 3-2/sctn 3.3 Previous Removal Actions. Are any of the work areas in the vicinity of the 3 areas identified by GPR as likely containing buried metal debris?

None of the proposed action areas are in the vicinity of the areas identified by a previous GPR survey as likely containing buried drums. In the event that buried drums are encountered, drums, depending on their integrity, shall be over packed into larger salvage drums, managed similar to drums containing decontamination wastewater and disposed based on characterization sample results. However, LEA does not anticipate discovery of any drums in the shallow excavations proposed.

19. pg 4-7/sctn 4.8 Communications. Consider using radios, given the distance between action areas, trailer, etc. Aside from safety, radios are helpful logistically.

LEA agrees and will provide radios for personnel communication.

Appendix B – Sample Access Agreement

20. Agreement What is the duration of the agreement? Is an access agreement needed for checking the spillway for debris?

The agreement that LEA has with each of the property owners does not have a termination date. The access agreement will be applicable until all work on their property has been completed. An access agreement has been obtained with the property owner that owns the dam in addition to the negative easement that will provide access to the Performing Parties and their contractors to inspect and maintain the dam.

Appendix C – Field Sampling Plan

21. pg 3-2/sctn 3.2 Action Area Soil and Sediment Sampling. Text indicates that soil on residential property having dioxin greater than 1 ppb must be excavated, removed, and incinerated. Is a different disposal facility/method proposed for dioxin-impacted soil excavated from the Allendale Dam property, since it's not residential? If so, then what are the disposal criteria and options?

Soil in the vicinity of Allendale Dam is located on a residential property. As such, the soil excavated from the vicinity of the dam will be excavated, removed, and incinerated as described in the Implementation Work Plan. No special requirements were identified in the UAO to handle the material from the dam separately.

22. pg 3-4/3.2.4, 3.3.4, 3.4.3 and 3.5.4 Sample Designation. To avoid sample mix-ups in the field, and to simplify sample tracking for field personnel, recommend using a simpler sample designation system, and modifying the Field Sampling Record (Figure 3-4). It's understood that the sequential 7-digit number printed out on the labels will be used for tracking data in the database, but it is important that the correct information (location, area, depth, etc.) is first associated with that number in the field.

It appears that all samples will be from the Centredale Manor Site (CMS); if this is the case, then one could argue that it isn't needed. There still may be value to having CMS on everything, to avoid confusion in the lab.

Highly recommend doing away with the "Round" designation; as this adds confusion. Number samples within each area sequentially instead.

Recommend using similar formats for all sample types, where possible. For delineation and confirmatory sampling of soil & sediment, suggest the following format:

Examples:

CMS – 01 – DEL – SS – 001A

CMS – 12 – CON – SD – 006D

Site = CMS for all

Area = 01, 02, etc. (I don't think "AREA" is necessary, so long as the area number is in a field that won't get confused with the sample number)

Type = Delineation (DEL), Confirmation (CON)

Material = Surface Soil (SS), Sediment (SD)

Sample # = 001, 002, 003 etc. (If you're confident that fewer than 100 samples will be collected during delineation at each area, and during confirmation sampling at each area, then 2 digits could be used here instead of 3: 01, 02, 03…)

Depth = Agree with A (0-6 in), B (6-12 in), and C (12-24 in). Suggest adding another letter (D?) for the floor samples (0-3 in).

Based on discussion with our database manager, the revised nomenclature for the sampling will be the following:

01-DEL-01

Area = 01, 02, etc., signifying the appropriate Action Area

Type = Delineation (DEL) or Confirmation (CON)

Sample Number = 01, 02, 03, etc.

Part of the reason for the change in nomenclature is that LEA's database is arranged to handle a maximum of 15 characters for location identifiers. As proposed, the sample location identifiers would be 17 characters. Changes in the database to reflect a change in the number of characters would be very costly. Therefore, the following fields have been dropped. The Site designator ("CMS") was deemed unnecessary due to the fact that the Site designator is already assigned to each sample in LEA's database. The sample type ("SS" and "SD") have been deleted because the sample type is entered in a separate field on the

Field Sampling Record. In addition, the sample type has nothing to do with the sample location. The sample depth will be recorded on the field paperwork and entered into LEA's database.

The Field Sampling Record will be maintained in its current format. Changes to the database setup for this form would be costly to perform. If there are any questions regarding LEA's database system, please contact Jamie Hall at 860-410-2951.

For the waste characterization samples, suggest the following format:

Site – Material – Sample#

Examples:

CMS – WW – 001

CMS - RW – 025

LEA will use this nomenclature for waste characterization samples.

23. Figure 3-4 Recommend modifying the Field Sampling Record, to allow fast and accurate recording of samples, by changing the titles of the various columns, so that they are in an order that matches up with the fields in the sample descriptions:

Area Type Material Sample No. Depth Time Description/Comments

Also, for convenience, suggest typing up a form customized for this project (name, location, client), and make copies of this sheet for use in the field.

LEA's database produces site-specific paperwork for each of the job sites that we work on. Therefore, site-specific paperwork will be produced for the Centredale Manor Site. Also, as discussed above, changes to this form would be very costly. Therefore, no changes shall be made to the Field Sampling Record.

24. pg 3-5/3.2.5.1 Soil Sampling. Text states that soil descriptions will not be performed. Highly recommend that brief descriptions be recorded on Field Sampling Record, as this information may be helpful if material type is found to have any influence on immunoassay test results.

LEA will provide soil descriptions pursuant to LEA SOP #10015, including a description of soil using a Modified Burmeister System for the description. Description will be provided on boring logs.

25. pg 3-6/3.2.5.1 Soil Sampling. Text states that borings will be abandoned with topsoil (rather than bentonite). It's assumed that this topsoil be provided from offsite. Please clarify. If proposing to backfill borings with cuttings, then materials should be returned to the depths from which they originated.

All sampling locations will be backfilled with topsoil from offsite sources. Prior to using the topsoil on the Site, chemical testing of the material will be performed as previously identified.

26. pg 3-6/3.2.5.2 Sediment Sampling. Text here indicates similar sampling methods will be used on soil and sediment (bucket auger, trowels, spade). SOP 10009 talks about using a spatula. Suggest considering using a push-core type sampler, as it may be quicker and neater to work with.

LEA will utilize a Geoprobe® macro-core sampling device, or similar direct push devices to sample all sediments during the initial delineation sampling operations. The core sampler has a plastic tube that is removed from the device that allows the sampler to view the specific soil horizons, descriptions and specific depths for sampling.

27. pg 3-9/3.3.2 Sample Locations (Conf.). Correct floor sampling frequency, from 1 per 30 sf, to 1 per 900 sf (30 ft by 30 ft).

The sampling frequency for confirmatory sampling of excavation bottoms will be two composite samples (five aliquots taken at locations in the shape of a five on a die) for every 30 foot by 30 foot, or 900 square foot area. It should be noted that any excavation less than 30 feet by 30 feet will still be sampled in this manner, with a minimum of two samples per excavation. For excavations less than 900 square feet, the excavation bottom will be divided in half and a minimum of two samples will be collected from each excavation bottom.

28. pg 3-14/3.5.3 Sample Analysis. Text here indicates that demolition debris and clearing materials, put in roll-offs, will have to be sampled and characterized for disposal. Will the soil excavated at Allendale Dam also have to be characterized in a similar fashion (if it's not required to be incinerated)?

The soil excavated from Allendale Dam is going to be excavated, removed, and incinerated at the off-site soil disposal location.

Also, text here seems to contradict section 4 of the Work Plan, which indicates that cleared material will be chipped and shipped to a local recycle facility. Please clarify how cleared material will be handled and disposed.

Cleared material discussed in Section 4 of the Work Plan is referring to trees and brush that will be cleared from the work areas and the perimeter of the Allendale Pond. This cleared wood will be chipped and recycled off-site. This cleared material is distinctly different from the debris that will be removed during the construction of the dam.

Also, if we have large debris, cobbles, boulders, does it make sense to try to sample it like it's a soil? What options might exist – wipe samples? decontaminating large debris? Will a dioxin facility take debris and boulders?

Large stones and stumps will be placed into roll-offs and removed from the Site with the soil excavated from around these items. It is LEA's understanding that the disposal facility will accept this type of material. Very large rocks that cannot be removed from excavation areas will be left in place and the surface of the rock will be cleared of spoil to the maximum extent prudent. This means that the rock will be scraped and brushed to remove all loose dirt.

Appendix D – Quality Assurance Project Plan – No Comment

Appendix E – Soil and Sediment Removal Specifications

29. Table of Contents Check that section numbers shown in TOC match up with section numbers, and page numbering matches up with section number: Field Engineering, Submittal Procedures.

The formatting of the table of contents and the page numbers have been made.

30. Section 01010 1.1 Excavation Revise discussion of dry decontamination, and add discussion of stabilization.

This section has been edited to include a brief discussion of decontamination and stabilization. The details for each operation has been provided in the specification Section 01120 – Decontamination and Section 02220 – Earthwork.

31. Section 01330 Submittals. EPA has requested copies of all submittals; the Corps may be provided these submittals either for information only, or the EPA may want the Corps to do a formal review of certain submittals. Please revise this section (and/or section 10 of the Work Plan) to indicate how submittals to the EPA will be handled.

In paragraph 1.4 of the specification Section 01330 – Submittal Procedures, the text of the specification indicates that one marked copy of the submittal will be provided to the EPA and one copy to the USACE representative on-site.

32. Section 02140 Dewatering. Revise to indicate how water generated from dewatering will be handled, contained, treated, discharged, or disposed.

As stated in a previous comment response, 3 categories of dewatering wastewaters will be managed on-site. A detailed discussion of the categories and handling procedures has been provided in paragraph 4.3.2 of the Work Plan and in Section 02140 of the specifications.

33. Section 02220 Earthwork. Add stabilization discussion, methods and materials.

As stated in comment response #30, a paragraph identifying the stabilization method has been provided in the specification Section 02220 – Earthwork.

34. Section 02220 Earthwork. 2.2 – Borrow. Please indicate for what parameters the borrow will be tested. Add this information to the Field Sampling Plan.

The sampling parameters have been added to the Field Sampling Plan.

Appendix F – Dam Reconstruction Specifications

35. Section 02227 Gravel Fills. 3.1 – Preparation of Foundation. Please provide details of the filter fabric/membrane material to be placed prior to building the cofferdam, to identify the interface (color, strength, perviousness, etc.).

Details for the provision of the filter fabric have been added to the specifications.

36. Section 02272 Rock Bolts. Please revise to indicate that the following items shall be submitted: rock core log(s), anchor hole drilling logs, pressure-testing logs (if done), and grout take records (if pre-grouting is done).

The specifications have been modified to include the identified submittals and testing requirements.

Appendix G – Project Standard Operating Procedures: No Comment.

Appendix H – Dam Basis of Design Report: No Comment.

Allendale Dam comments

Comments provided by Mark Geib, Water Management Section

> **As requested the Draft Implementation Work Plan for the Centerdale Manor Site has been reviewed. The main focus of this review was the plans and associated documentation for the reconstruction of the Allendale Dam. The plans reviewed are very similar to the plans prepared by the Corps in 1995. The main differences appear to be that the centerline of the spillway section has been moved about 6 feet downstream of the existing timber crib dam apparently with the intent of leaving the existing timber crib inplace and back flooding it once the new dam is complete. Also the new structure has a narrower base footing and rock anchors will be provided for stability.**
>
> **The construction phasing is somewhat different from the Corps plan with phase 1 of the current design intended to focus on modifications to the existing concrete intake and gate structure. It is stated on page 3 of Appendix H that the new diversion plans provide the same level of protection as the original Corps plan. It also states that the dimensions of the low level outlet are not known and the current design calls for demolishing the opening (and providing a modified gate structure??) consistent with the original design. It also states that the size of the gate and size of the demolished opening may be reduced based on practical constraints at the opening (to be determined once the area is dewatered and inspected).**
>
> **Comment. 1 – one possible concern with this is that the Corps had estimated the two existing openings at 2.6 ft wide by 4.4 ft high and we were proposing to increase these to 2- 2.6 ft wide by 8.8 ft high, or doubling the flow area. Given this opening our analysis showed that with the phase II cofferdam at elev. 93.5 (also proposed in the current design) the structure could pass 350 cfs or between a 1 and 2 year event. If this opening is significantly reduced, due to the field conditions encountered, then the corresponding discharge capacity will be reduced. Since the cofferdam design is for a relatively frequent flood event the impacts of any reduced opening and any needed increase in cofferdam height should be evaluated and possibly an alternative diversion plan be developed for phase II. Either this or more risk must be assumed in terms of flooding the work area. Since the cofferdam design is for a relatively frequent event is the construction going to be limited to the low flow season?**
>
> The current construction procedure will enlarge the openings to the same size as used in the original design until phase II is done. The gates will be installed at the

end of phase II and any modification to the openings performed during installation will not impact the construction of the dam.

Comment 2 – a minor point concerning phase1 cofferdam is it is shown on sheet C-3 at elevation 91. Assuming the existing timber crib is not going to be opened any wider than the existing breach then the 91 elevation may need to be increased. As can be seen by the survey data from 10/26/95 the pond level was at 91.53 and a review of the USGS flow as recorded at the Centredale gage shows that on that date the discharge was only 59 cfs. Therefore to maintain the concrete structure dry during the work activities the cofferdam elevation should be increased or more flow area be provided through the existing dam.

It is GEI's understanding that the breach is larger and lower than shown in the survey data on the drawings. LEA will adjust the cofferdam in the field based on observed flows and conditions.

Comment 3 – the various sections shown on sheets C-6 and C-7 show excavation very close to or under the foundation of the existing timber crib. Will this result in the failure of the timber crib while the new dam is being constructed

It is GEI's opinion that the dam is founded on bedrock or dense till overlying bedrock. A vertical cut could be excavated in this material. GEI and LEA will evaluate the material and provide additional shoring if required to allow construction of the dam.

REVIEWER'S NAME: Michael E. Walsh

1. **Appendix H, page 3, second paragraph: If a sluice gate is to be installed, the opening in the gate structure should not be enlarged beyond the top of the gate in the closed position. The gate structure needs to block all flows through the structure and allow all flows to pass over the spillway**.

   GEI and LEA agree with this comment and will ensure that the opening is not enlarged beyond the top of the gate in the closed position.

2. **Appendix A, Design Calculations: The structural design is thorough and well thought out.**

   Noted and appreciated.

3. **"Elevation of Proposed dam": Rock anchors should be spaced at 5'-0" to agree with the design calcs**

The drawings will be modified to be consistent with the specs and design calculations.

4. **"Elevation of Proposed dam": Note pointing to enlarged opening in the gate structure reading "new invert" is incorrect. Also, see comment 1 above.**

   The modifications to the drawings have been made.

5. **"Section B-B": Granite stone cap should be 8" x 2'-0". Also, the top of concrete should be El. 92.79'**

   The modifications to the drawings have been made.

6. **"Detail C": Note reading vertical face is incorrect.**

   The modifications to the drawings have been made.

7. **"Notes": Note 3 should specify 5,000 psi concrete to agree with the design calcs**

   The modifications to the drawings have been made.

8. **"Section E-E": Section does not appear to be drawn correctly. See Section H/10. Also, the dimension from the center of the dam to the downstream limit of the footing should be 3'-6".**

   The modifications to the drawings have been made.

9. **"Section E-E and Section H/10": Label the material (granite stones?) applied to the face of the dam extension into the right abutment.**

   The modifications to the drawings have been made.

10. **"Concrete Gate Structure Repair Details – Elevation": Label size and spacing of dowels to be epoxied into the existing footing.**

    The modifications to the drawings have been made.

11. **"Site Plan": Reference note stating "On left bank remove existing brush as necessary . . ." The removal of trees and brush on the earthen embankment portion of this dam needs to be kept to a minimum. The root structure is well established and at this point is likely providing stability to the embankment. Over-clearing could cause problems in the future with the stability of the dam.**

As discussed in the meeting, typically trees are removed (including root ball) when encountered in the dam. LEA will minimize damage to trees and remove roots of any tree that is cut, backfill and compact the placed backfill.

Implementation Work Plan

1. **Fig. 1-1, the site location should show general location of office and storage area. The map scale is too small and is hard to read.**

   The Site Location Map provided as Figure 1-1 is intended only for identifying the site in respect to major roadways and surrounding neighborhoods. It is not intended to provide any details for locations of areas at the site. The storage area location can be found on Figure 3-1.

2. **Is there a Fig. 2-1?**

   A Figure 2-1 has not been included. The numbering of the figures correspond with the section of the work plan that they have been discussed and referenced.

   Fig. 3-1 - The field office, storage and containment areas need to have construction fencing.

   The figure does not show the fencing that exists around the field office and material storage area. Fencing will be provided around the containment area.

   Is the containment area only storing clean material? Where is the contaminated material going to be stored?

   The containment area identified in Figure 3-1 will be used to store full roll-off containers prior to disposal off-site. In addition, drummed material will be stored in a storage box located adjacent to the field office trailer.

3. **Need to have a site plan to show Work Zone, Exclusion Zone, Contamination Reduction Zone and Safe Zone.**

   At this time, the extent of the zones has not been established. Additional investigation will be required to adequately delineate the initial excavation areas in the proposed action areas. At the completion of the additional investigation, drawings will be submitted to indicate the excavation areas including the zones and other facilities that will be installed to complete the excavation work.

4. **Fig. 4-1 – Does this figure describe Action Area 8 construction or for other areas too?**

This figure identifies the single containment pad that will be constructed adjacent to the dam reconstruction area.

5. **Is there going to be a detailed construction plan for each Action Area to show dimensions of the area, depth of excavation, etc. Also the location of the Containment pad is too far from other areas. The construction drawing is too rough with not enough detail to let contractor know what to do. This is for all the Action Areas, except Allendale Dam, Action Area 8.**

   As previously discussed in the response to your comment # 3, drawings will be submitted to indicate the excavation areas including the zones and other facilities that will be installed to complete the excavation work.

6. **Note on this sheet "REPAIR AND MODIFY THE EXISTING CONCRETE GATE STRUCTURE BEFORE COMPLETING THE PHASE I CONSTRUCTION" Which part is the phase I construction SITE PLAN did not show the Stone Protection up stream and down stream of the dam.**

   The modifications to the drawings have been made.

7. **There are two sets of tree lines shown on the plan. Delete one set**

   The modifications to the drawings have been made**.**

8. **SECTION A', Note "CLEAN GRAVEL FILL TO EL. 93.0 (MAX.)" and there is a 1.5' STONE PROTECTION ON CLEAN GRAVEL FILL. Top of the Conc. Dam is El. 93.5. STONE PROTECTION will be a foot over the top of the concrete dam**

   The modifications to the drawings have been made.

9. **RECONSTRUCT ALLENDALE DAM, the original design for construction of the concrete dam has two phases, new construction drawing show only one phase, but is still entitled PHASE II CONSTRUCTION**

   The modifications to the drawings have been made.

10. **SECTION B', How wide is the Stone Protection? The slope shown on the section is not what is noted (2 horizontal and 1 vertical).**

    The modifications to the drawings have been made.

REVIEWER: MARIE WOJTAS, CHEMIST

The following comments apply to the Work Plan:

1. **5-3/5.3.2 - This section refers to portable gas chromatograph, which does not appear to be applicable to this project. Please revise.**

   The text has been modified to eliminate the reference to the portable GC.

2. **5-9/5.10 - The referenced Tables 6-1 and 6-2 are not included. Please add.**

   A copying error may have caused the omission of the tables in the reviewer's copy. The tables will be included in the Wok Plan.

3. **7-1/7 - The referenced Table 7-1 is not included. Please include.**

   A copying error may have caused the omission of the tables in the reviewer's copy. The tables will be included in the Wok Plan.

The following comments apply to the Field Sampling Plan (FSP):

4. **3-9/3.3.2 - This section states that a confirmatory sample will be collected every 30 square feet. Please revise.**

   Confirmatory samples will be collected along the sidewalls of the excavations at 30 foot increments (composite samples comprised of three aliquots from each 0 to 6-inch, 6 to 12-inch, and 12 to 24-inch intervals, equaling a total of three composite samples). The sampling frequency for confirmatory sampling of excavation bottoms will be two composite samples (five aliquots per composite sample taken at locations in the shape of a five on a die) for every 30 foot by 30 foot, or 900 square foot area. It should be noted that any excavation less than 30 feet by 30 feet will have a minimum of two samples collected.

5. **3-12/3.4.4 - The analyses listed in this section for wastewater drum samples is not consistent with Table 3-1 or Table 3-4. Please revise to be consistent. Also please verify that the analyses listed comply with the chosen disposal facility's requirements.**

   The tables and text have been revised to address this comment.

6. **3-14/3.5.3 - The analyses listed in this section for demolition debris and clearing material is not consistent with Table 3-1 or Table 3-4. Please revise to be consistent. Also please verify that the analyses listed comply with the chosen disposal facility's requirements.**

   The tables and text have been revised to address this comment.

7. **3-14/3.5.5 - The referenced section 3.2.6 is incorrect. Please revise.**

LEA believes that this reference is correct as the sample handling and storage for waste samples will be the same as for soil and sediment sampling. The reference was left as is.

8. 3-18/3.9.3 – The referenced section 2.3.7 is incorrect. Please revise.

The text has been revised to address this comment.

9. Table 3-1 – The table states that confirmatory samples will be collected every 400 square feet from the excavation bottom. Please revise (see also comment nos. 4, 5, and 6).

The revision has been made to table to reflect 2 samples for every 900 square feet.

10. Table 3-4 - The following comments apply to Table 3-4:

a. Revise the table to be consistent with the text and Table 3-1 (see comment nos. 5 and 6).

The revision has been made to table to address this comment.

b. Note that an extra container will be collected for confirmatory dioxin samples (one for immunoassay and one for SW846 method analysis).

A note has been added to table the address the comment.

c. Remove air samples from this table as they are not discussed in this plan.

The revision has been made to table to address this comment.

The following comments apply to the Quality Assurance Project Plan (QAPP):

11. General/QAPP Format - The QAPP format is not consistent with the current Region I guidance ("Region I, EPA - New England Compendium of Quality Assurance Project Plan Requirements", October 1999). Please revise to be consistent or provide a crosswalk between the QAPP required elements specified in the guidance document.

The QAPP format has been changed to conform to the most current Region I guidance. A crosswalk has been provided in the QAPP for elements that reference other documents related to the project (e.g. Field Sampling Plan, Implementation Work Plan, etc).

12. 1-3/1.2.3.1 - Identify the analytical laboratory selected for the project.

Severn Trent Laboratory is the selected laboratory for this project. Dioxin analyses will be performed in the West Sacramento facility. All other parameters will be analyzed in the Shelton, Connecticut facility. This information has been added to the referenced section of the QAPP.

13. 1-9/1.7.1 - Provide verification of the successful performance of the immunoassay analysis (based on past historical data or through a correlation study program for this field effort). Also, provide documentation of analyst training for the immunoassay analysis.

A correlation study was performed using the Cape Technologies Dioxin Immunoassay field kits on May 15 through May 23, 2000 in the NERL Mobile Laboratory on a set of dioxin laden soils/sediments from the Centredale Manor site in Providence, Rhode Island. A copy of this correlation study will be forwarded. Training was provided by Bob Harrison of Cape Technologies on July 18 – 19, 2001. Three LEA employees attended the training. Training certificates have been requested and will be forwarded upon receipt.

14. 1-10/1.7.2 - Recommend that USACE validation (instead of state certification) be used for laboratory qualifications since state certification does not include dioxin analysis.

Recommendation has been made to indicate USACE validation is used for laboratory qualification for dioxin analysis has been added.

15. 1-10/1.7.3 - Recommend that USACE validation (instead of state certification) be used for laboratory qualifications since state certification does not include dioxin analysis.

Recommendation has been made to indicate USACE validation is used for laboratory qualification for dioxin analysis has been added. The laboratory will maintain state certification for all other analytical parameters.

16. 2-3/2.2.2.1, 2.2.2.2, 2.2.2.3 - Change references from Table 3-5 to Table 3-4.

References have been changed to Table 3-4 as indicated.

17. 2-5/2.2.4.3 - The items listed as included on chain of custody forms is not consistent with the form shown in Figure 3-1 of the FSP. Please revise Figure 3-1 to be consistent.

The text has been revised to be consistent with the chain of custody form shown in Figure 3-1 in the FSP. This figure has been changed to Figure 3-1 (a) and is LEA's internal chain of custody. In addition, Severn Trent Laboratories' chain of custody form has been included as Figure 3-1 (b).

18. 2-5/2.2.4.4 - Provide the addresses for the immunoassay and analytical laboratory.

The immuonassay will be performed by the LEA analytical laboratory which is located at 100 Northwest Drive in Plainville, CT. Confirmational analyses will be performed by Severn Trent Laboratories (STL). Dioxin analysis will be performed by STL Sacramento at 880 Riverside Parkway in West Sacreamento, CA. All other fixed laboratory parameters will be performed by STL Connecticut located at 128 Long Hill Cross Road in Shelton, CT. The addresses have been added to the appropriate section of the text in the QAPP.

19. 2-9/2.4.1.2 - Explain the sample collection homogenization technique which will be used for collection of field duplicates.

The soil samples will be thoroughly mixed and homogenized and transferred to the appropriate sample containers. If standing water is noted on the soil sample, the LEA field technician will attempt to dry the sediment by placing soils on an absorbent pad to wick away water from the sample. The field technician will also make an attempt to prevent larger grained particles (gravel and cobbles) from being included in the sample to promote homogeneity. Following dewatering the sample, the soil samples will be placed directly into two Teflon®-lined, 4-ounce glass jars (for EIA screening). Soil samples will then be placed into sample coolers.

20. 2-10/2.4.5 - In the second sentence, please remove the phrase "(with the exception of PCDD/PCDF analysis)".

The phrase has been removed as indicated.

21. 2-12/2.5 - Recommend the use of soil performance evaluation samples for dioxin analysis available through commercial vendors or EPA.

The QAPP has been modified to identify the use of alternating aqueous and soil PE samples. The soil PE samples will be considered single blind and will be used to identify any matrix interference. Aqueous PE samples will be double blind to evaluate the laboratory's performance.

22. Tables 1-1, 1-2, and 1-3 - These tables should be updated with laboratory specific information when the analytical laboratory for the project has been chosen. Also, remove non applicable information (such as alkalinity, ammonia, BOD, etc.).

A request has been submitted to Severn Trent Laboratory to provide the appropriate laboratory specific information. The tables will be updated upon receipt. The non-applicable information has been removed form the tables.

USEPA COMMENTS

Reviewer: Anna Krasko

1. Section 9.6, Operation and Maintenance, and Section 15, Institutional Controls Plan: Maintenance activities and IC restrictions shall include raceway gate near the Allendale Dam (see page 21 of the January 18, 2001 Action Memorandum). The raceway gate structure can be improved to minimize future maintenance efforts.

A concrete plug will be installed behind the gate of the raceway to eliminate the potential for this gate to be opened causing water to flow through the raceway.

Pursuant to UAO SOW, Section V.5.b., with respect to the property identified in the draft ICP, EPA requests that within 60 days from receipt of this letter the Respondents shall submit to EPA for review and approval, a draft easement and a current title commitment or report, as described in that section of the SOW.

The submission will be provided as indicated.

2. Appendix C, Field Sampling Plan: Sampling shall be done at depths 0-6", not 0-3", other sampling intervals (6-12" and 12-24") are OK. In the event that results of the initial sampling do not require extension of the grid, delineation sampling shall be performed over extension of all areas shown on Figures 3-1 and 3-2 of the EE/CA and Figures 2 through 6 of the Action Memorandum, which are generally defined as the areas where dioxin concentrations in soil and sediment exceed 1 ppb. Such sampling shall be performed in accordance with requirements of UAO SOW, Section VI.2.a.(2), to demonstrate that soil left on residential properties in the areas delineated in the EE/CA and Action Memorandum do not contain dioxin above 1 ppb. To achieve this objective, sampling shall be extended to cover all previously identified Action Areas. Such sampling shall be extended on 10-foot increments, similar to the one proposed in the FSP, but can be targeted to locations at the lowest elevation which potentially require excavation, along with biased samples as needed, (i.e., areas were elevated dioxin levels are most likely to be found). Such sampling will ensure that should noncontiguous elevated dioxin levels be found in the Action Areas; these areas will be removed as was anticipated in the Action Memorandum and the Order.

The modification to the Field Sampling Plan has been made to address this comment. Proposed sample locations have been extended on the figures to extend the samples to the limits of the previously identified areas.

3. Section 3.5, Transportation Routes: The Plan shall identify transportation routes for loaded trucks leaving the site and heading to the disposal facilities.

The text of the Work Plan has been modified to include the truck routes for the project.

4. Section 4, Waste Management: The Plan shall identify handling, storage, characterization and disposal of the temporary gate structure proposed to be used during dam reconstruction, assuming it would be handled similar to dam debris.

The stop logs for the temporary gate structure will be handled as debris. The timbers lagged to the concrete structure will remain in place in the event that the permanent sluice gate requires repairs. Additional temporary stop logs can be placed between the lagged timbers to isolate the new gate. The text of the Work Plan has been modified to reflect this change.

RIDEM - Office of Waste Management Comments:

GENERAL COMMENTS:

1. Please be aware that the work to be performed must be conducted in accordance with ARARS, which were previously identified by the State but not included in the Draft Implementation Work Plan. This includes RI Air Pollution Control Regulation #17: Odors (RIGL Section 23-23, February 1977), RIDEM Water Quality Regulations (RIGL 46-12 and 46-17.1 as amended August 1997) , RIDEM Rules and Regulations for Groundwater Quality (RIGL 46-12, 46-13.1, 42-17.1, as amended 1996) and Guidelines for the Management of Investigation Derived Waste (Policy Memo 95-01). In general these ARARs should be applied throughout the document where applicable. Also, please note that the Rules and Regulations Governing the Enforcement of the Freshwater Wetlands Act (RIGL 2-1-18 et. seq., as amended 1994) should be listed in table 7-1 under the authority of State Regulatory Requirements, not under Criteria Advisories, Guidance.

In response to the specific regulations, the RI Air Pollution Control Regulation #17: Odors states that "any contaminant or any combination of contaminants" shall be emitted beyond the property line. It is LEA's understanding that there are no VOCs that will be of concern during the excavation of the project. A PID will be utilized on the project to confirm this assumption.

Methods for construction have been designed to apply with the RIDEM Water Quality Regulations and the RIDEM Rules and Regulations for Groundwater Quality to the maximum extent practicable.

Investigation derived waste will be provided in accordance with the Guidelines for the Management of Investigation Derived Waste and has been indicated in the Field Sampling Plan.

The reference to the authority for the Rules and Regulations Governing the Enforcement of the Freshwater Wetlands Act has been modified in Table 7-1 to reflect the comment.

2. Please be advised that secondary containment for each frac-tanks must be capable of withholding 110% of the volume of the tank.

LEA intends on using a frac tank that has a built in secondary containment capable of holding 110% of the volume of the frac tank.

SPECIFIC COMMENTS:

3. Section 4.3.2 – Dewatering and Decontamination Wastewater; Page 4-4, Paragraph 1.

"Methods of construction and dry decontamination will attempt to minimize the amount of wastewater generated during the NTCRA."

Although dry-decontamination is adequate as an initial step in the decontamination process, due to the nature of contaminants present at the site, please be advised that wet-decontamination may be needed to fully decontaminate equipment, tools, etc. This possibility should be noted in the revised document.

The text of the Work Plan has been modified to include wet decontamination procedures and requirements.

4. Section 4.4.3 – Disposable PPE; Page 4-6, Paragraph 13.

"Disposable PPE will be placed into the general trash container for disposal at the Central Landfill."

Disposable PPE contaminated with dioxin should not be combined with general trash for disposal at Central Landfill. It seem prudent to place PPE into a separate container, which could then be classified and approved for whatever disposal option is deemed appropriate.

The text of the Work plan has been modified to include disposal of the PPE with the soil and sediment to be incinerated off-site.

5. Section 8.1.7 – Cofferdams; Page 8-3, Paragraph 1.

"The cofferdams will consist of concrete barriers, plastic sheeting and sand bags placed sufficiently beyond the proposed excavation limits."

This Office requests that you clarify how the above mentioned materials will be handled after the excavation and dam reconstruction activities are complete and the cofferdam is no longer needed. Will these materials be decontaminated and disposed of, please explain.

The sand bags and plastic used as part of the cofferdam will be disposed off-site with the soil and sediment. Concrete blocks will be decontaminated, the water collected, treated with bag filters and placed back into the river. The sediment collected from the decontamination will be disposed off-site to the incinerator.

6. Section 9.1.1 – Gate Structure; Page 9-1, Paragraph 1.

"A temporary berm of concrete blocks and sandbags will be installed to prevent water from passing through the gate structure."

It would seem prudent to minimize the amount of sandbags to be used as they have a propensity to break upon removal, which would cause additional sedimentation in the river.

LEA intends to minimize the number of sand bags to be used at the site due to the requirement for disposing each sandbag off-site with the soil and sediment. Concrete blocks can be decontaminated without the requirement for off-site disposal.

7. Section 9.1.2 – Clearing; Page 9-2, Paragraphs 1.

"Clearing of the area required to complete the reconstruction of the dam will be performed at the beginning of the project in conjunction with clearing the perimeter of the Allendale Pond and any known areas where removal activities or brush and trees will be required."

Provisions should be added to the document to include the clearing of debris (branches, logs, trash, etc.) which currently block the existing dam structure. It would seem prudent to also have the provisions include how this material will be disposed of. If it is determined that the debris is contaminated with dioxin, the material should also be disposed of in the same manner as the contaminated soils and sediments.

The Work Plan indicates that any debris removed from the dam as part of the reconstruction will be disposed off-site with the soil and sediment.

8. Section 12.5.4 – Releases reportable under SARA Title III; Page 12-14; Paragraph 1.

"In addition to the notification made for any release or incident, a release or spill of a CERCLA hazardous substance or extremely hazardous substance, that exceeds the reportable quantity as listed in 40 CFR 302.4 or 355 Appendix A, must be reported immediatelly to the State Emergency Response Commission and the Rhode Island DEP."

Please change DEP to DEM.

The text has been modified to correct the acronym.

9. Section 5.3 – Air Monitoring; Site Specific Health and Safety Plan; Page 5-1; Paragraph 1.

"Air will be monitored daily using a handheld PID, combustible gas indicator and DataRAM Real-Time Aerosol Monitoring before field activities begin at each new EZ and during ground disturbing activities."

Provisions should be made to monitor dust and keep levels to a minimum keeping in accordance with the RIDEM Air Pollution Control Fugitive Dust regulations.

Section 8.2.3 – Soil Excavation of the Work Plan has been modified to include a discussion for adding water to the soil in the event that fugitive dust is caused during the excavation activities.

10. Section 3.2.3 – Sample Anaylsis; Field Sampling Plan; Page 3-3; Paragraph 1.

"No fixed laboratory analysis will be performed on these samples."

It would seem appropriate to reiterate that this is only true for the delineation sampling activities.

The text of this paragraph in the Field Sampling Plan has been modified to address this comment.

11. Section 3.2.5.1 – Soil Sampling; Field Sampling Plan; Page 3-6; Paragraph 3.

"Soil samples will be collected from the 0-3 inch, 6-12 inch, and 12-24 inch depth intervals."

The document should clarify for the collection from the 3-6 inch interval, or if it will be automatically included for excavation if it is determined that the 0-3 inch interval is contaminated with dioxin greater than 1 ppb.

The sample interval has been modified to be 0 to 6 inches at the EPA's request.

12. Section 1.1 – Clearing; Soil and Sediment Removal Specifications; Page 01010-1; Paragraph 1.

"Remove all adjacent structures (i.e.; chain link fences, concrete slabs, etc.) as required to progress with the work."

Please clarify if this will include any concrete sluiceways.

This will not include any concrete sluiceways.

13. Section 1.1 – Waste Disposal; Soil and Sediment Removal Specifications; Page 01010-2; Paragraph 1.

"Transport and dispose of all wastes generated at the Site in accordance with the requirements identified in the Implementation Work Plan."

Please be advised that the documents should state that any containerized waste will not remain at any location longer than prescribed in the Rules and Regulations for Hazardous Waste Management.

The Rules and Regulations for Hazardous Waste Management state that the generator of hazardous waste can store the material on site for less than 90 days as temporary storage. The federal requirements that the regulation references have been addressed concerning the storage of these materials. It is LEA's intent to remove the material from the site as soon as possible after the material has been placed into the roll-off containers. The 90 day requirement will not be exceeded for storage of any hazardous waste on-site.

If you have any questions concerning the responses provided, please do not hesitate to contact me at (860) 747-6181.

Sincerely,

LOUREIRO ENGINEERING ASSOCIATES, INC.

Scott A. Miller, P.E.
Construction Manager

pc: Anna Krasko, USEPA
Sarah Martino, RIDEM