#25917

APPENDIX C

TECHNICAL SPECIFICATIONS AND STANDARD OPERATING PROCEDURES

SDMS DocID 25917

APPENDIX C-1

TECHNICAL SPECIFICATIONS FOR LABORATORY ANALYSIS

TECHNICAL SPECIFICATION

AIR ANALYSIS OF VOLATILE ORGANIC COMPOUNDS BY METHOD TO-14 AND POLYCHLORINATED BIPHENYLS BY METHOD TO-10

DELIVERY OF ANALYTICAL SERVICES

FOR
U.S. ENVIRONMENTAL PROTECTION AGENCY

BY
TETRA TECH NUS, INC.

PROJECT NO. N0191

SPECIFICATION NO. S99-RAC1-099

JUNE 1999

TABLE OF CONTENTS
TECHNICAL SPECIFICATION
AIR ANALYSIS OF VOLATILE ORGANIC COMPOUNDS BY METHOD TO-14 AND POLYCHLORINATED BIPHENYLS BY METHOD TO-10

SECTION		PAGE
1.0	INTRODUCTION	1
2.0	SCOPE OF WORK	1
3.0	SCHEDULE	1
	3.1 Sample Collection and Sampling Device Requirements	2
	3.2 Holding Times	2
	3.3 Results Turn-Around Time and Data Package Deliverables	3
4.0	ANALYTICAL REFERENCES	3
5.0	TARGET COMPOUND LIST AND REQUIRED QUANTITATION LIMITS	4
6.0	SPECIAL TECHNICAL INSTRUCTIONS	6
	6.1 Volatile Analysis Method TO-14	6
	6.2 PCB Analysis Method TO-10	9
7.0	QUALITY CONTROL REQUIREMENTS	11
8.0	ANALYTICAL DELIVERABLES	11
9.0	EXCEPTIONS	13

ATTACHMENT A - COMPLETE SAMPLE DELIVERY GROUP FORMS

ATTACHMENT B - ELECTRONIC DATABASE FORMAT REQUIREMENTS

1.0 INTRODUCTION

Tetra Tech NUS, Inc., under contract No. 68-W6-0045 is providing assistance to the U.S. EPA Region I to perform a Non-Time-Critical Removal Action at a Superfund site. TtNUS is seeking support to analyze volatile organic compounds (VOC) in air samples collected in SUMMA canisters and polychlorinated biphenyl (PCB) samples collected in polyurethane foam (PUF) sampling cartridges.

2.0 SCOPE OF WORK

The subcontractor shall provide services for analyzing VOC in air samples collected using SUMMA passivated canisters following the guidelines of Method TO-14. In addition, PUF cartridges should be analyzed for PCBs according to the guidelines of Method TO-10. The samples are to be analyzed for the compounds listed in Section 5.0. Modifications are identified in Section 6.0 (Special Technical Instructions).

The subcontractor must provide leak-free, pre-cleaned 6-liter SUMMA passivated stainless steel canisters, stainless steel vacuum gauges, pre-cleaned filters, and mechanical stainless steel flow controllers appropriated for a 8-hour sample interval must be provided. The canisters must be supplied under vacuum, as specified in Section 9.1.1.1 of Method TO-14. All hardware connections should be of the same size, preferably 1/4 inch Swagelok.

The subcontractor must also provide pre-cleaned PUF and the sampling cartridges that meet the requirements of Section 10.4 of Method TO-10.

A turn-around time of 48 hours is required for the TO-14 analysis, and 72 hours for the TO-10 analysis.

3.0 SCHEDULE

The sample collection, holding times, and data package turn around times are described below.

3.1 Sample Collection and Sampling Device Requirements

The following samples are scheduled for collection:

- Thirty-three SUMMA canister samples for VOC by TO-14 will be collected from June 21 to 27, 1999 (Four to five samples per day for 7 days).

- Sixty-one PUF cartridges for PCBs by TO-10 will be collected from June 21 to July 5, 1999 (Four to five samples per day for 14 days).

The samples will be shipped daily to the laboratory by overnight carrier. Saturday delivery will be necessary. The samples collected on Sunday will be shipped with the samples collected the following Monday.

The following sampling devices must be delivered to the site no later than June 18, 1999:

- Thirty-five canisters, 35 gauges, 35 filters and 35 flow controllers

- Sixty-one PUF/sampling cartridges

The sampling equipment must be delivered to:

Tetra Tech NUS, Inc.
Attention: Bill Irwin
Route 191 and Stone Road.
Denny's River
Meddybemps, Maine 04657
Phone (207) 454-7204

3.2 Holding Times

VOC analysis must be performed within 14 days from the date of sample collection. The PCB extraction must be performed within 7 days from sample collection and the analysis,

within 40 days of sample extraction. However, a turn-around time of 48 hours for VOC and 72 hours for the PCB analysis is required.

3.3 Results Turn-Around Time and Data Package Deliverables

The Method TO-14 VOC results must be reported via telefax within 48 hours from sample receipt. The TO-10 PCB results must be reported via telefax within 72 hours from sample receipt. The VOC and PCB data packages are due within 10 days after laboratory receipt of the last sample.

The hard data package deliverables' requirements are described in Section 8.0 of this specification. The electronic database deliverables formatted in accordance with Attachment B must be included with the data packages. The results must be delivered to:

Tetra Tech NUS, Inc.
Attention: Lucy Guzman
55 Jonspin Road
Wilmington, Massachusetts 01887-1062
Phone (978) 658-7899
Fax: (978) 658-7870

4.0 ANALYTICAL REFERENCES

The VOC analysis must be performed according to EPA Method TO-14, "Determination of Volatile Organic Compounds (VOCs) in Ambient Air using SUMMA Passivated Canister Sampling and Gas Chromatographic Analysis", May 1988. EPA 600/4-84-041. The target VOC list is presented in Section 5.0.

The PCB analysis must be performed according to EPA Method TO-10, "Method for the Determination of Organochlorine Pesticides and Polychlorinated Biphenyls in Ambient Air Using Low Volume Polyurethane Foam (PUF) Sampling with Gas Chromatography/electron capture Detector (GC/ECD)", March 1989. EPA 600/8-80-038. The PCB target list is presented in Section 5.0

5.0 TARGET COMPOUND LIST AND REQUIRED QUANTITATION LIMITS

The VOC Method TO-14 target compounds and quantitation limits are as follows:

Target Compound	Quantitation Limit ppbv
Freon 12	0.5
Chloromethane	0.5
Freon 114	0.5
Vinyl Chloride	0.5
Bromomethane	0.5
Chloroethane	0.5
Freon 11	0.5
1,1-Dichloroethene	0.5
Freon 113	0.5
Methylene Chloride	0.5
1,1-Dichloroethane	0.5
cis- 1,2-Dichloroethene	0.5
Chloroform	0.5
1,1,1-Trichlororethane	0.5
Carbon Tetrachloride	0.5
Benzene	0.5
1,2-Dichloroethane	0.5
Trichloroethene	0.5
1,2-Dichloropropane	0.5
cis-1,3-Dichloropropene	0.5
Toluene	0.5
trans-1,3-Dichloropropene	0.5
1,1,2-Trichloroethane	0.5
Tetrachloroethene	0.5
Ethylene Dibromide	0.5
Chlorobenzene	0.5
Ethyl Benzene	0.5
m,p-Xylene	0.5
o-Xylene	0.5
Styrene	0.5
1,1,2,2-Tetrachloroethane	0.5
1,3,5-Trimethylbenzene	0.5
1,2,4-Trimethylbenzene	0.5
1,3-Dichlorobenzene	0.5
1,4-Dichlorobenzene	0.5
Chlorotoluene	0.5
1,2-Dichlorobenzene	0.5

Target Compound	Quantitation Limit ppbv
1,2,4-Trichlorobenzene	0.5
Hexachlorobutadiene	0.5
Propylene	2.0
1,3-Butadiene	2.0
Acetone	2.0
Carbon Disulfide	2.0
2-Propanol	2.0
Trans-1,2-Dichloroethene	2.0
Vinyl Acetate	2.0
Chloropropene	2.0
2-Butanone (Methyl Ethyl Ketone)	2.0
Hexane	2.0
Tetrahydrofuran	2.0
Cyclohexane	2.0
1,4-Dioxane	2.0
Bromodichloromethane	2.0
4-Methyl-2-pentanone	2.0
2-Hexanone	2.0
Dibromochloromethane	2.0
Bromoform	2.0
4-Ethyltoluene	2.0
Ethanol	2.0
Methyl ter-Butyl Ether	2.0
Heptane	2.0

The PCB method TO-10 target compound list and the required quantitation limits are as follows:

Target Compound	Quantitation Limit µg per PUF
Aroclor 1242	1
Aroclor 1248	1
Aroclor 1254	1
Aroclor 1260	1

6.0 SPECIAL TECHNICAL INSTRUCTIONS

All technical instructions in the EPA Method TO-14 and Method TO-10 must be followed unless specified otherwise in this section.

The laboratory will use the DAS Case Number and the DAS sample number (DAH###) when reporting sample results. Raw data must be labelled with the Tetra Tech NUS sample number (DAH###). Hand writing labeling is acceptable.

6.1 Volatile Analysis Method TO-14

A. The laboratory must provide 35 precleaned and certified canisters (33 for field samples, one to verify calibration of flow meters, and one extra), 35 gauges, and 35 flow controllers. The canisters must be 6 liter SUMMA passivated canisters, as specified in Section 7.1.1.2 of Method TO-14. The canisters must be precleaned and evacuated according to Sections 11.2 and 12.5.1 of Method TO-14. A certification of cleanliness and documentation of performance of a leak check for each canister must accompany the canisters and also be submitted with the data package deliverables.

B. Surrogate Standards. Three surrogate compounds, toluene-d8, 4-bromofluorobenzene, and 1,2-dichloroethane-d4, are recommended. The concentration of the surrogates should be approximately 10 ppbv. The recovery for the surrogate must be between 70-130 percent.

C. Additional canisters to be used with the calibration standards and the laboratory fortified canister must also be spiked with the surrogate compounds at the same time. Enough canisters must be prepared to cover every analytical determination associated with this sub-contract.

D. A GC-MS-SCAN system, as described in Section 10.1.1 of Method TO-14, must be used. The target analyte list and the required quantitation limits are specified in Section 5.0 of this specification.

E. A library search for up to 20 non-target compounds must be performed and reported. TIC identification should be performed as described in the EPA CLP SOW OLM03.1 Exhibit D-VOA, Section 11.1.2.

F. Internal Standards. Chlorobenzene-d5 must be used as an internal standard. This internal standard must be introduced as a gas into the cryogenic trap during the analysis of each standard, blank, QC sample, and field sample. The amount of internal standard injected must result in a final concentration of 20 ppbv. The amount of internal standard fortified must be recorded and reported. The samples' internal standard areas must be within plus or minus 50 percent from the latest calibration standard area. If the internal standard area limits are not met, re-analyze the sample once. If the criteria are still not met, flag the associated data with an "i" and report all analyses.

G. The mass spectrometer must be tuned once every 12 hours of operation according to the procedure in Section 10.2.2 of Method TO-14. The ion abundance criteria specified in Table 4 of Method TO-14 must be met prior to performing standard calibration and sample analysis.

H. Instrument Calibration. A gas standard containing all the target compounds listed in Section 5.0 of this specification must be used (See Section 10.2.3.1 of Method TO-14). The source of this standard must be documented and reported in the data package. The calibration of the instrument must be performed according to Section 10.2 of Method TO-14, with the following modifications:

- A five-point initial calibration must be performed. The lowest calibration standard must be at the required quantitation limits (Section 5.0). The highest concentration standard must define the working range of the analysis. Concentrations of 0.5, 5, 20, 50, and 100 ppbv are recommended. For samples of higher concentrations, a smaller sample volume than described in Section 10.4.2 of Method TO-14 must be analyzed, or a dilution must be performed to bring the

sample response within the calibration range of the instrument. The average response factor for each target compound must be greater than 0.1. The relative standard deviation of the five-level initial calibration must not exceed 25 percent.

- A continuing calibration standard at a middle range concentration must be analyzed every 12 hours after the initial calibration and at the end of the analytical sequence. The response factor for each target compound must be greater than 0.1. The difference of the response factor between the continuing calibration and the average initial calibration must not exceed 30 percent.

I. Humid zero air must be analyzed after instrument calibration, as described in Section 10.2.3 of Method TO-14, to demonstrate that the instrument is free of contamination. The concentration of any target compound must be less than 0.5 ppbv. The humid zero air blank analysis must be repeated until criteria are met.

J. A laboratory fortified canister (LFC) must be analyzed after the humid zero analysis. This standard must be prepared by spiking a certified precleaned and evacuated canister with standard gas mixture. The amount of standard spiked should result in a fortified canister concentration of 1.0 ppbv. The LFC must be obtained from a different source than the calibration standards. The LFC standard preparation records and the source must be included with the deliverables. The recovery of the LFC must be within 30 percent of the true value. If criteria are not met, prepare a new initial calibration, re-analyze the humid zero air blank, and re-analyze the LFC.

K. Replicate analysis must be performed on each canister requiring dilution. If no sample requires dilution, one replicate analysis of a full volume sample must be performed. The relative percent difference between the replicates must be below 25 percent. If limits are exceeded, re-analyze the samples

once. If limits are still not met, report all analyzes and flag the data with an "r".

L. Record the canister volume after the sample is withdrawn and report this value with the raw data deliverables. If a very small volume of sample is required to bring the response of the target compounds within the linear calibration range of the instrument, a dilution must be performed. Small volumes cannot be reproducibly drawn through the cryogenic trap. For samples requiring dilution, one of the following procedures is acceptable:

- Diluting a small aliquot from the sample canister into a canister of zero humid air and analyzing the dilution using the TO-14 techniques.
- Introducing a small aliquot from the sample canister into the analysis train, between the canister and the cryogenic trap, while flushing zero humid air through the cryogenic trap.

6.2 PCB Analysis Method TO-10

A. The laboratory must provide 61 precleaned and certified PUF sampling cartridges. The PUF cartridges must be prepared as specified in Section 10 of Method TO-10. At least one assembled cartridge from the same batch submitted to TtNUS for sample collection must be analyzed as a blank and the results submitted with the first data package. The results must meet the requirements of Method TO-10, Section 10.4.

B. Surrogate Standard. One or two surrogate standards must be spiked in all samples and QC samples prior to extraction. Tetrachloro-m-xylene and decachlorobiphenyl might be used as surrogate standards. The surrogate standards must be spiked at a level such that the final extract concentration falls at the higher end of the PCB instrument calibration range. The surrogate recoveries should be within 60-120 percent.

C. The PUF plug samples must be extracted and concentrated as described in Method TO-10, Section 12.1. Sample cleanup must be performed if matrix interferences are present.

D. Method Blank. One method blank must be extracted for each batch of samples of the same matrix extracted at one time. The method blank must not contain target compounds at concentrations above the required quantitation limits.

E. Initial Calibration. A three-level calibration standard with Aroclor 1260 must be performed to demonstrate linearity within the calibration range. The relative standard deviation of the response factors must be 20 percent or less. A single calibration standard near the mid-point concentration may be performed for the other target Aroclors.

F. Calibration Verification. A continuing calibration using the Aroclor 1260 at mid-point concentration must be analyzed every 10 samples and at the end of the analytical sequence. The relative percent difference between the average initial calibration response factor and the calibration verification response factor must be 20 percent or less. The absolute retention times of at least <u>three</u> major peaks for each Aroclor in the calibration verification standard must be within the retention time windows determined during the initial calibration.

G. At least three peaks for each Aroclor must be used for sample quantitation.

H. A PCB quality control (QC) check standard from a source independent of the instrument calibration standards must be analyzed daily. The QC check standard recovery must be within 70-130 percent. Criteria must be met prior to sample analysis.

7.0 QUALITY CONTROL REQUIREMENTS

The subcontractor will allow Tetra Tech NUS and/or the U.S. EPA complete and clear access to the laboratory facility, subcontractor personnel, equipment, and documentation prior to and throughout the duration of the project. The subcontractor may be audited with respect to compliance with all the requirements in this technical specification and with the subcontractor's Quality Assurance Plan.

Quality control criteria specified in Method TO-14 and TO-10 must be met unless modified elsewhere in this technical specification.

8.0 ANALYTICAL DELIVERABLES

A. Canisters, gauges, flow controllers, and PUF cartridges as specified in Sections 3.1 and 6.0 of this technical specification, must be delivered to the site no later than June 18, 1999.

B. The VOC target compound results (Form I, Form I-TIC) must be submitted within 48 hours of sample receipt. The PCB target compound results, including surrogate standard recoveries, must be submitted within 72 hours of sample receipt.

C. The hard copy data package deliverables must resemble as closely as possible the CLP organic statement of work (SOW) OLMO3.1 or the latest revision. The forms provided in the CLP SOW must be utilized where appropriate. The data qualifiers utilized in the CLP SOW must be applied. The results must be tabulated and must include positive results or the required quantitation limit qualified with a "U" for the non-detected results.

D. An electronic database file formatted according to the requirements of Attachment B must be included with the data package.

E. A brief narrative describing the procedure performed by the laboratory and any deviations from the method must be provided. Problems encountered during analysis, problem resolution, and any factors that may affect the validity of the data must be addressed.

F. The original signed sample chain-of-custody forms; copies of the sample log in sheets indicating the time, date, and condition of the samples at arrival; custody seals; and telephone logs must be included.

G. Canister and PUF cleanliness certification data, including chromatograms and quantitation sheets must be provided with the first data package. A canister leak check performance must be included.

H. The raw data must be provided for all field and laboratory QC sample analyses. Raw data must include chromatograms, ion chromatograms, integration reports, bench sheets describing PUF extraction, surrogate standard added, and canister pressures, conditions, and sample quantities analyzed. The raw data must have the Tetra Tech NUS sample numbers.

I. The positive and non-detected results for all field samples, QC samples, and laboratory blanks must be summarized on CLP Form Is, modified to include the target compounds required in Section 5.0.

J. The surrogate, internal standard, calibration, and laboratory QC data must be reported.

K. An example calculation must be provided for positive results and detection limit values reported.

L. The data package must be paginated and of good readable quality.

M. Any missing deliverables must be submitted to Tetra Tech NUS within 48 hours from the time requested, at no additional charge.

N. Complete Sample Delivery Group File (CSF) Audit. Due to the litigative nature of each Superfund site, Region I EPA requires that all analytical data (tabulated raw or supporting data) be delivered with each data package. The CSF forms are included in Attachment A and must accompany each data package. The DC-2 Form may be modified to contain all deliverables specific to the method used. The laboratory using these audit forms must show that each piece of sample data, raw data, calibration data, QC data, and any other requirement of the statement of work or analytical specification are included in the data package deliverables.

9.0 EXCEPTIONS

If quality control requirements or limits are exceeded, or if field samples are destroyed or lost, or if matrix interference is suspected, or any other technical problems arise that require changes in the technical specifications, contact:

Lucy Guzman
Tetra Tech NUS, Inc.
(978) 658-7899

TECHNICAL SPECIFICATION

ANALYSIS OF AQUEOUS, SOIL, SEDIMENT, AIR, AND WIPE SAMPLES FOR DIOXIN AND DIBENZOFURAN BY EPA METHOD 8290A

DELIVERY OF ANALYTICAL SERVICES

FOR
U.S. ENVIRONMENTAL PROTECTION AGENCY

BY
TETRA TECH NUS, INC.

TtNUS PROJECT No. N0191

SPECIFICATION No. S00-RAC1-150

AUGUST 2000

TABLE OF CONTENTS
TECHNICAL SPECIFICATION
ANALYSIS OF AQUEOUS, SOIL, SEDIMENT, AIR, AND WIPE SAMPLES FOR DIOXIN AND DIBENZOFURAN BY EPA METHOD 8290A

SECTION		PAGE
1.0	INTRODUCTION	1
2.0	SCOPE	1
3.0	SCHEDULE	1
3.1	Sample Collection	2
3.2	Sample Containers, Preservation, and Holding Times	2
3.3	Data Package Deliverables	3
4.0	ANALYTICAL REFERENCES	4
5.0	REPORTING LIMITS	4
6.0	SPECIAL TECHNICAL INSTRUCTIONS	4
7.0	QUALITY CONTROL REQUIREMENTS	7
8.0	ANALYTICAL DELIVERABLES	8
9.0	EXCEPTIONS	11

ATTACHMENTS

ATTACHMENT A – HEXACHLOROXANTHENE INFORMATION

ATTACHMENT B - COMPLETE SAMPLE DELIVERY GROUP FORMS

ATTACHMENT C - REPORTING FORMS

ATTACHMENT D - ELECTRONIC DATABASE FORMAT REQUIREMENTS

1.0 INTRODUCTION

Tetra Tech NUS, Inc. (TtNUS) in support of the U.S. EPA Region I is procuring laboratory analysis for polychlorinated dibenzo-p-dioxins (PCDD) and polychlorinated dibenzofurans (PCDF) in aqueous, soil, sediment, air, and wipe samples from a Superfund site. The samples will be collected in several sampling events.

2.0 SCOPE

The subcontractor shall analyze aqueous, soil, sediment, air, and wipe samples for tetra through octa-chlorinated dioxins and furans by high resolution gas chromatography/high resolution mass spectrometry (HRGC/HRMS) using EPA Method 8290A. An additional compound, 1,2,4,5,7,8-hexachloro(9H)xanthene (HCX) shall also be tentatively identified and reported (Section 6.0 Special Technical Instructions).

The data results shall be reported to TtNUS as CLP-like data packages within 35 days from laboratory receipt of the last sample in each sample delivery group (SDG). Data package deliverables are described in Section 8.0. The electronic database format requirements are outlined in Attachment D.

The laboratory must submit a current method detection limit (MDL) study for Method 8290A performed within the previous 12 months. The MDL for the target compounds must be less than or equal to the method required quantitation limits stated in Section 1.3 of Method 8290A.

The subcontractor shall provide the sample containers as described in Section 3.2 of this specification. The subcontractor is responsible for proper disposal of the unused samples after notification by Tetra Tech NUS.

3.0 SCHEDULE

The sample collection schedule, sample preservation and holding time, and data package turn-around time are described below.

3.1 Sample Collection

The following samples are scheduled for collection during September 2000 to April 2001:

First sampling event:

- 20 sediment samples for collection in September 2000

Second sampling event:

- 42 soil samples for collection in October 2000
- 21 groundwater samples for collection in October 2000

Third sampling event:

- 76 soil samples for collection in March 2001
- 39 groundwater samples for collection in April 2001

Fourth sampling event:

- 15 non-aqueous phase liquid (NAPL) samples for collection in March 2001
- 5 air PUF samples for collection in April 2001
- 5 wipe samples for collection in April 2001

A unique case number will be assigned to the samples for each sampling event. The samples will be shipped to the laboratory every 2 days by overnight courier. Saturday delivery will be necessary.

3.2 Sample Containers, Preservation, and Holding Times

The dioxin sample extraction should be performed within 30 days of collection and the dioxin analysis must be performed within 45 days from sample extraction. The following table summarizes the required sample containers and preservatives.

Analysis	Number of Samples/Matrix	Containers per Sample	Container Type	Preservatives
Dioxins	20/Sediments	1	8 oz amber glass jar	Cool at 4°C
	118/Soil	1	4 oz amber glass jar	Cool at 4°C
	60/Water	2	1-liter amber glass jar	Cool at 4°C
	15/NAPL	1	4 oz amber glass jar	Cool at 4° C
	5/PUF for air samples	1	3-inch thick polyurethane foam plug, glass cartridge	Cool at 4° C
	5/Wipes	2	Glass fiber paper per container	Wipes saturated with acetone. Cool at 4° C

The subcontractor must provide amber sample containers that meet the specifications described in EPA OSWER Directive No. 9240.0-05A. The sample containers must be packed in Coleman-like coolers. Ten-percent extra sample containers must be included for field quality control samples. The sample containers for the first and second sampling events must be delivered to TtNUS (see address in Section 3.3) no later than September 7, 2000. The containers for the third and fourth sampling event should be delivered one week before the scheduled sampling date.

The samples and sample extracts are to be maintained in the dark at 4 degrees centigrade. The subcontractor is responsible for proper disposal of the unused samples when notified by TtNUS..

3.3 Data Package Deliverables

Data packages are due within 35 days after laboratory receipt of the last sample in each sample delivery group (SDG). Each SDG includes up to 20 field samples and two performance evaluation samples. The aqueous rinsate blank and a set of performance evaluation samples (one pair) should be included with the associated field samples (all matrices) for each SDG.

Electronic database deliverables in accordance with Attachment D must be included with the data packages. Data packages must be delivered under chain of custody to:

Tetra Tech NUS, Inc.
Attn: Lucy Guzman
55 Jonspin Road
Wilmington, Massachusetts 01887

4.0 ANALYTICAL REFERENCES

Target compound list PCDD and PCDF (Section 1.0 of Method 8290A) and 1,2,4,5,7,8-hexachloro(9H)xanthene analysis must be performed according to EPA SW-846 Method 8290A, Revision 1 from January 1998. The modifications described in Section 6.0 of this technical specification must be followed.

5.0 REPORTING LIMITS

The lower method calibration limit (MCL) for aqueous, soil, and sediment samples listed in Table 1 of Method 8290A must be achieved. The lower method calibration listed for fuel oils in Table 1.0 must be achieved for the NAPL samples. A minimum reporting limits of 10 nanograms must be achieved for the PUF air cartridge and the wipe samples.

6.0 SPECIAL TECHNICAL INSTRUCTIONS

The technical instructions described in EPA Method 8290A must be adhered to by the subcontractor. Any deviations from this request must be approved by TtNUS prior to contract award.

1. The method required quantitation limits must be met. A calculated Estimated Detection Limit (EDL) according to Section 7.9.5 of Method 8290A must be reported for the non-detected compounds. Estimated Maximum Possible Concentrations (EMPC) values must be reported when PCDD/PCDF values do not meet ion ratio criteria as per Section 7.9.5.2.1 of the method.

2. Analysis of a one-tenth aliquot of the sample is recommended for those samples with high dioxin or furan concentrations. Suspected high concentration samples will be marked in the chain-of-custody form. If the detection limits are not met due to low target compound concentration, the 90 percent fraction should be analyzed. If target compounds exceed or saturate the calibration range, the laboratory should perform a further dilution using another aliquot from the 90 percent fraction. If target compounds grossly exceed the calibration range, re-extraction of a proportional small amount of sample may be necessary.

3. The percent solid must be determined according to Section 6.6 of Method 8290A. The percent solid of the sediment samples must be determined prior to sample extraction. If the sediment sample contains less than 30 percent solids, the laboratory must adjust the extraction sample size to compensate for the low percent solids in the aliquot to achieve a 10 g (dry weight) equivalent. The laboratory should contact TtNUS before extraction of NAPL samples.

4. One pair of performance evaluation (PE) samples provided by TtNUS must be analyzed with each SDG. A pair of PE samples consists of a blank and a spiked sample. The PE samples must be analyzed with the associated field samples regardless if they were extracted under separate batches because of different matrix.

5. The toxicity equivalence (TE) for each sample analyzed must be calculated and reported as per Section 7.9.7 and Table 10 of Method 8290A with the following exceptions: a TEF of 1.00 will be applied to 1,2,3,7,8-PeCDD results and a TEF of 0.0001 will be applied to 1,2,3,4,6,7,8,9-OCDD and 1,2,3,4,6,7,8,9-OCDF results. The EMPC values are included in the TEF calculations. The EDL values <u>are not</u> be included in the calculation of TEFs.

6. A five-point initial calibration must be analyzed as specified in Section 7.7.1 of Method 8290A. Initial calibration must have been performed at least 1 year prior to sample analysis and after any changes in operating conditions. The same initial calibration analytical conditions must be used to analyze the field samples. The criteria listed in Section 7.7.2 of the method must be met before sample analysis.

7. The continuing calibration requirements specified in Section 7.7.3 of Method 8290A must be followed. The acceptance criteria described in Section 7.7.4 must be met prior to sample analysis.

8. An additional compound, 1,2,4,5,7,8-hexachloro(9H)xanthene must be quantitated as a tentatively identified compound using the masses and retention time described in Figure 1 and 2 of Attachment A. The ion abundance ratio for ions 390 and 392 must be within 1.96 to 2.66. The retention time window for descriptor 3 should be extended for about 2 minutes beyond the retention time established for the last eluter hexachlorinated compound.

9. Second column confirmation must be performed for all samples in accordance with Section 7.9.8 of Method 8290A. For the confirmation analysis, the calibration criteria must be met for the compounds to be confirmed.

10. Results are reported in pg/L for aqueous samples, in ng/kg for the sediment, NAPL, and solid samples, and total nanograms for the PUF and wipe samples. The soil and sediment results should be reported on a dry weight basis.

11. One field sample for each SDG must be analyzed in duplicate. The relative percent difference (RPD) should be within 50-150 percent.

12. One matrix spike/matrix spike duplicate pair must be analyzed for each SDG of up to 20 field samples of the same matrix. The percent recovery should be within 50-150 percent and 20 percent RPD.

13. An instrument blank must be run for every 12-hour period immediately after the calibration standard on each instrument used for sample analysis. An instrument blank consists of the extraction solvent with internal and recovery standards added. The instrument blank must be reported and documented in the same way the other blanks and samples are reported and documented. If a clean extraction blank was analyzed on that instrument immediately after the calibration standard <u>during the 12-hour shift</u>, then there is no need to run an instrument blank. Either a clean extraction blank or an instrument blank must be analyzed prior to the field samples for each instrument and

each calibration sequence. If contamination is found, the source of the contamination must be identified and eliminated. Analysis of the samples must be suspended until the source of the contamination is eliminated and an acceptable blank is analyzed. The method and instrument blanks may no have any target compounds above 2 percent of the signal for the associated internal standard.

14. The identification criteria specified in Section 7.8.4 of Method 8290A must be met for the target compounds.

15. The percent recovery for the cleanup standard should be within 40-135 percent. If criterion is not me, re-extraction of the sample may be required.

16. A static resolving power of at least 10,000 (10 percent valley definition) must be demonstrated at appropriate masses for perfluorokerosene (PFK) before any analysis is performed. Static resolving power checks must be performed at the beginning and at the end of each 12-hour shift according to the procedures in Section 8.2.2 of Method 8290A.

17. The laboratory should use the DAS case number and DAS sample number (DAH###) when reporting sample results. In addition, the DAS sample number must be included in the header of the raw data for each sample; it may be handwritten, if necessary.

7.0 QUALITY CONTROL REQUIREMENTS

The subcontractor will allow TtNUS and/or the U.S. EPA complete and clear access to the laboratory facility, subcontractor personnel, equipment, and documentation prior to and throughout the duration of the project. The subcontractor may be audited with respect to compliance with all the requirements in this technical specification and with the subcontractor's Quality Assurance Plan.

All quality control criteria specified in Method 8290A and Section 6.0 of this technical specification must be followed.

8.0 ANALYTICAL DELIVERABLES

The following items are required as deliverables for each data package:

1. The data package should be prepared to resemble a CLP deliverable as close as possible. The CLP forms or equivalent (Attachment C) modified to include the hexachloroxanthene compound must be used. The laboratory may use their own forms as long as they contain the same information as the CLP forms.

2. A case narrative explaining method used, cleanup procedures, type of mass spectrometer used, problems encountered, and problem resolutions must be provided. The narrative must include a table showing the laboratory sample numbers and their corresponding TtNUS sample numbers.

3. The labeled spike results must be reported in tabular format. Non-spiked PCDD/PCDF detected must be quantitated and reported. Form 2 from Attachment C (or equivalent) should be used.

4. The PCDD/PCDF toxicity equivalence must be reported in a table for each sample analyzed. Form 1DFB from Attachment C may be used.

5. The PCDD/PCDF column confirmation results must be reported for all samples requiring confirmation. All information required for the CLP SOW DFLM01.2 Form 1 B, PCDD/PCDF Second Column Confirmation Summary (Form I PCDD-3), must be included on this form. EMPC values will be flagged "*" and EDL will be qualified "U" on the form.

6. PCDD/PCDF total homologue concentration and the EMPC or EDL ratio must be summarized in a table and reported for each sample analyzed. PCDD/PCDF laboratory duplicate sample results must be reported, as well as the method and instrument blank results. All information required for the CLP SOW DFLM01.2 Form 2 DF PCDD/PCDF Total Homologue Concentration Summary (Form II PCDD) must be included on this form. EMPC values will be flagged "*" and EDL will be qualified as "U" on the form.

7. PCDD/PCDF window defining mix results must be summarized, indicating the first and last eluting PCDD and PCDF isomers. The percent valley height between 2,3,7,8-TCDD and the other tetra-dioxin isomers at m/z 319.8965, and between 2,3,7,8-TCDF and the other tetra-furan isomers at m/z 303.9016, must be reported for each HRCC3 standard analyzed. The PCDD/PCDF analytical sequence for the primary and secondary column confirmation analyses must also be reported. All information on the CLP SOW DFLM01.2 Form 5 DFA, PCDD/PCDF Window Defining Mix Summary (Form V PCDD-1) and Form 5 DFB PCDD/PCDF Chromatographic Resolution Summary (Form V PCDD-2) must be included on these forms.

8. PCDD/PCDF initial calibration response factors must be tabulated, including the mean RRF and the percent RSD for all labeled and unlabeled compounds. PCDD/PCDF continuing calibration results must also be tabulated and reported, including the RRF, mean RRF, percent D, RRF flag, ion ratio, and ion flag. The continuing calibration retention time must be reported in a tabular form. All information required on the CLP SOW DLMO1.2 Form 6 DFA PCDD/PCDF Initial Calibration Response Factor Summary (Form VI PCDD-1); Form 6 DFB PCDD/PCDF Initial Calibration Ion Abundance Ratio Summary (Form VI PCDD-2); Form 7 DFA PCDD/PCDF Continuing Calibration Summary (Form VII PCDD-1); Form 7 DFB PCDD/PCDF Continuing Calibration Retention Time Summary (Form VII PCDD-2); and Form 5 DFC PCDD/PCDF Analytical Sequence Summary (Form V PCDD-3) must be included on these forms. The Analytical Sequence Summary will include all standards, window defining mix, resolution checks, blanks, sample QC, and field samples.

9. Soil, NAPL, and sediment samples must be reported in ng/Kg (dry weight basis). Aqueous samples must be reported in pg/L and PUF air and wipe samples must be reported as total nanograms per sample.

10. All sample tracking reports, original signed chain-of-custody forms, custody seals, airbill, and any telephone logs referring to the samples must be delivered with the data package.

11. Copies of the sample log in sheets must indicate the condition of the sample on arrival, the time, and the date of arrival. (Form DC-1, Attachment B).

12. Submit bench sheets for sample extraction, amounts of isotopically-labelled standard added, cleanup steps, and percent solid analysis.

13. The source of all standard materials must be documented and reported. The concentration of all standards used must be indicated.

14. Submit a sample calculation showing how the results were calculated with an example of the actual calculations where a positive PCDD/PCDF result was found (if none are detected, then a labeled PCDD recovery should be used in the example). Also include an example of calculations for EDL and EMPC.

15. The laboratory must provide all instrument outputs including, but not limited to, quantitation reports, area summaries, and selected ion current profiles. The complete data system report shall include all of the information listed below. For laboratories that do not use automated data system procedures, a laboratory "raw data sheet", containing the following information, must be included in the sample data package in addition to the SICPs:

    - EPA sample number
    - Date and time of analysis
    - RT (and scan number if available) of identified compounds
    - Ions used for quantitation with measured area
    - Copy of area table from data system
    - GC/MS Instrument ID
    - Lab file ID

16. SICPs must be presented so the two molecular ions, M^+ and $(M+2)^+$, and any relevant internal/recovery standards or diphenyl ether interferents, are presented on one page. The SICP must show the full time window scanned for each ion. It is acceptable to put the native analyte SICPs on one page and the labeled analogs on another page.

17. The data package must be paginated and of good readable quality. A diskette in an electronic database format, according to the requirements of Attachment D must be included for each SDG.

18. Any missing deliverable must be submitted to TtNUS or EPA within 48 hours from the time requested at no additional charge.

19. Complete Sample Delivery Group File (CSF) Audit. Due to the litigative nature of each Superfund site, EPA Region I requires that all analytical data be delivered with each SDG. The CSF forms included in Attachment B must accompany each data package. The CSF form must be modified, if necessary, to contain all deliverables specific to EPA Method 8290A. The laboratory using these audit forms must show that each piece of sample data, raw data, calibration data, QC data and any other requirement of the statement of work or analytical specifications are included in the data package.

9.0 EXCEPTIONS

If quality control requirements or limits are exceeded, or if field samples are destroyed or lost, or if PE samples are broken, or if matrix interference is suspected, or any other technical problems arise that required changes in the technical specifications, contact:

Lucy Guzman
Tetra Tech NUS, Inc.
(978) 658-7899

ATTACHMENT A

HEXACHLOROXANTHENE INFORMATION

TECHNICAL SPECIFICATION

ANALYSIS OF SOIL AND SEDIMENT SAMPLES FOR VOLATILE ORGANIC COMPOUNDS, SEMIVOLATILE ORGANIC COMPOUNDS, PESTICIDES/POLYCHLORINATED BIPHENYLS, METALS, ACID VOLATILE SULFIDE/SIMULTANEOUSLY EXTRACTED METALS, TOTAL ORGANIC CARBON, GRAIN SIZE DISTRIBUTION, AND AQUEOUS SAMPLES FOR ALKALINITY, SULFIDE, AND TOC

DELIVERY OF ANALYTICAL SERVICES

FOR
U.S. ENVIRONMENTAL PROTECTION AGENCY

BY
TETRA TECH NUS, INC.

PROJECT No. N0191

SPECIFICATION No. S00-RACI-151

AUGUST 2000

TABLE OF CONTENTS
TECHNICAL SPECIFICATION
ANALYSIS OF SOIL AND SEDIMENT SAMPLES FOR VOLATILE ORGANIC COMPOUNDS, SEMIVOLATILE ORGANIC COMPOUNDS, PESTICIDES/POLYCHLORINATED BIPHENYLS, METALS, ACID VOLATILE SULFIDE/SIMULTANEOUSLY EXTRACTED METALS, TOTAL ORGANIC CARBON, GRAIN SIZE DISTRIBUTION, AND AQUEOUS SAMPLES FOR ALKALINITY, SULFIDE, AND TOC

SECTION		PAGE
1.0	INTRODUCTION	1
2.0	SCOPE OF WORK	1
3.0	SCHEDULE	2
3.1	Sample Containers, Preservatives, and Holding Times	2
3.2	Data Package Deliverables	4
4.0	ANALYTICAL REFERENCES	4
5.0	SAMPLE QUANTITATION LIMITS	5
6.0	SPECIAL TECHNICAL INSTRUCTIONS	5
6.1	VOC Soil and NAPL Analysis	5
6.2	SVOC, Pesticide/PCB, and Metals Sediment and NAPL Analysis	7
6.3	AVS/SEM Analysis	7
6.4	Total Organic Carbon Lloyd Kahn Method, Methods 415.1 and 415.2)	9
6.5	Grain Size Distribution (ASTM D422-63) Analysis	10
6.6	Alkalinity (Method 310.1) Analysis	11
6.7	Sulfide Method 376.1 or 376.2 Analysis	12
7.0	QUALITY CONTROL REQUIREMENTS	13
8.0	ANALYTICAL DELIVERABLES	13
9.0	EXCEPTIONS	15

ATTACHMENTS

ATTACHMENT A - TOC LOYD KAHN METHOD

ATTACHMENT B - ACID VOLATILE SULFIDE METHOD

ATTACHMENT C - CSF FORMS

ATTACHMENT D - ELECTRONIC DATABASE FORMAT REQUIREMENTS

1.0 INTRODUCTION

Tetra Tech NUS Inc. (TtNUS), under contract to the U.S. EPA Region I is procuring services to analyze soil, sediment, non-aqueous phase liquid (NAPL), groundwater, and wipes samples for organic and inorganic parameters. The samples will be collected in several sampling events.

2.0 SCOPE OF WORK

The subcontractor shall analyze soil samples for volatile organic compounds (VOCs) by EPA Method 5035 and the CLP Statement of Work (SOW) OLM04.2. The sediment, NAPL samples shall be analyzed for SVOCs and pesticide/PCBs by the CLP SOW OLM04.2, and total metals by the CLP SOW ILM04.1. In addition, the laboratory shall analyze sediment samples for acid volatile sulfide (AVS) by the Allen and Fu Method and the SEM by the CLP SOW ILM04.1. The grain size distribution shall be performed by ASTM D422-63 and the TOC analysis by Lloyd Kahn following the special technical instructions in Section 6.0. The groundwater samples shall be analyzed for alkalinity by Method 310.1, sulfide by Method 376.1 or 376.2, and TOC by Method 415.1 or 415.2.

The percent moisture of the sediment samples must be determined prior to sample extraction, digestion, or analysis. The amount of sediment sample analyzed must be increased to compensate for the moisture content of the sediment samples. The required quantitation limit specified in Section 5.0 must be met for all sediment samples regardless of the percent moisture.

The data results shall be reported as CLP-type data packages <u>within 35 days</u> from laboratory receipt of the last sample per sample delivery group (SDG). Electronic database deliverable requirements are outlined in Attachment D. The data package deliverables are described in Section 8.0.

The subcontractor should provide the appropriate pre-preserved sample containers, as described in Section 3.2. The subcontractor is responsible for proper disposal of the unused samples 60 days after delivery of data results.

3.0 SCHEDULE

The following samples are scheduled for collection during September 2000 to April 2001:

First sampling event (September 2000):

- 20 sediment samples for SVOCs, pesticide/PCBs, metals, AVS/SEM, TOC, and grain size

Second sampling event (October 2000):

- 80 soil samples for VOCs
- 21 groundwater samples for alkalinity, sulfide, and TOC

Third sampling event (March 2001):

- 76 soil samples for VOCs
- 15 non-aqueous phase liquid (NAPL) samples for VOCs, SVOCs, pesticide/PCBs, and metals

Fourth sampling event (April 2001):

- 39 groundwater samples for alkalinity, sulfide, and TOC
- 5 wipe samples for pesticide/PCBs

A unique case number will be assigned to the samples for each sampling event. The samples will be shipped to the laboratory every 2 days by overnight courier. Saturday delivery will be necessary.

3.1 Sample Containers, Preservatives, and Holding Times

The following table summarizes the required sample containers, preservatives, and technical holding time. The technical holding time is counted from the date of sample collection:

Analysis	Number of Samples /Matrix	Containers per Sample	Container Type	Preservatives	Holding Times
VOCs	156/Soils 15/NAPL	~~2~~ 3	40-ml VOC amber vial	Na_2SO_4 to pH <2	14 days
		2	40-ml VOC amber vial	5 ml of Me(OH)	14 days
		1	2-oz glass jar	Cool at 4^0 C	14 days
Alkalinity	60/GW	1	1-liter polyethylene	Cool at 4^0 C	14 days
Sulfide	60/GW	1	1-liter polyethylene	Zinz acetate, Na(OH) to pH >9	7 days
TOC	60/GW	1	40-ml VOC amber vial	H_2SO_4 to pH <2	28 days
SVOC/ Pest/ PCBs	20/Sed 15/NAPL	1	8 oz amber glass jar	Cool at 4^0 C	14 days extraction 40 days analysis
	3/Aq	1	80 oz amber glass	Cool at 4^0 C	7 days extraction 40 days analysis
Metals	20/Sed 15/NAPL	1	8 oz glass jar	Cool at 4^0 C	180 days except 28 days mercury
	3/Aq	1	1-liter polyethylene	HNO_3 to pH < 2	180 days except 28 days mercury
AVS/ SEM	20/Sed	1	8 oz amber jar	Cool at 4^0 C	14 days AVS 14 days SEM
TOC	20/Sed	1	2 oz VOC vial	Cool at 4^0 C	14 days
Grain Size	55/Sed	1	16 oz jar	Cool at 4^0 C	None

The sample containers must meet specifications described in EPA OSWER Directive No. 9240.0-05A. Approximately 10 percent additional sample containers should be provided. The sample containers must be packed in Coleman-like coolers. The laboratory must provide enough coolers to accommodate every other day shipment of the samples during the sample collection periods described in Section 3.1. One temperature blank vial must be provided for each cooler. The laboratory is requested to provide a packing slip indicating the analytical parameter for which each bottle type is designated. The sample containers should be delivered to TtNUS (Wilmington, MA) by September 14, 2000.

The subcontractor should store the samples for 60 days after delivery of the data results. The subcontractor is responsible for proper disposal of the unused samples after 60 days of storage.

3.2 Data Package Deliverables

Data packages are due within 35 days after laboratory receipt of the last sample in each case. Electronic database deliverables developed in accordance with Attachment D must be included with the data package. CLP-type electronic files are also acceptable. Data packages must be delivered under chain of custody to:

Tetra Tech NUS Inc.
Attention: Lucy Guzman
55 Jonspin Road
Wilmington, Massachusetts 01887-1020

4.0 ANALYTICAL REFERENCES

The low concentration VOC soil samples must be purged using a closed-system purge-and-trap device, as described in EPA Method 5035 from SW-846, Revision 0, December 1996. The aqueous samples and the methanol-preserved soil/NAPL samples should be analyzed as described in the CLP SOW OLMO4.2, with the modifications described in Section 6.0.

The SVOC and pesticide/PCBs sediment samples and the wipes pesticide/PCB samples must be extracted and analyzed in accordance with the CLP SOW OLM04.2 and the metal analysis should be performed according to the CLP SOW ILM04.1, modified as described in Section 6.0.

The acid volatile sulfide must be performed following the Allen and Fu Method included in Attachment B. The TOC analysis must be performed according to the Lloyd Kahn Method for Determination of Total Organic Carbon in Sediment. U.S. EPA, Region II. July 1986 (See Attachment A). The grain size distribution analysis should be performed according to ASTM D422-63 November 1963 (Re-approved 1990) Standard Test Method for Particle Size Analysis of Soils.

The groundwater samples should analyzed for alkalinity by EPA method 310.1, for sulfide by Method 376.1 or 376.2, and TOC by Method 415.1 or 415.2 from EPA Methods foe Chemical Analysis of water and Wastes; EPA-600/4-79-020, revised March 1983.

5.0 SAMPLE QUANTITATION LIMITS

The VOC (low concentration), SVOC, and pesticide/PCB quantitation limits presented in Table 3.0, Exhibit C, CLP SOW OLM04.2 must be met for the soil, sediment, and NAPL samples. A minimum quantitation limit of 600 ug/Kg must be reported for the medium level VOC soil and NAPL samples. The CLP contract-required detection limits in Exhibit C of the CLP SOW ILM04.1 must be met for the metal NAPL and sediment samples. The method modifications described in Section 6.0 must be followed to achieve the soil quantitation limits (dry basis) for all sediment samples regardless of the high moisture content of the samples.

The sediment TOC required detection limit is 100 mg/kg and the required reporting limit for AVS is 1.0 µmole AVS/g dry weight.

The required quantitation limits for the groundwater samples are: ~~2.0~~ 5.0 mg/l for alkalinity, ~~0.1~~ 1.0 mg/L for sulfide, and 1.0 mg/L for TOC.

6.0 SPECIAL TECHNICAL INSTRUCTIONS

The laboratory will use the DAS case number and DAS sample number (D#####) when reporting sample results. In addition, the DAS sample number must be included in the header of the raw data for each sample; it may be handwritten if necessary.

All technical instructions in the referenced analytical methods (Section 4.0) must be adhered for the aqueous sample analysis. In addition, include the following:

6.1 VOC Soil and NAPL Analysis

1. A method detection limit (MDL) study for the low and medium level procedures must be performed in accordance with Section 10.3 of the Method and Code of Federal Regulations, Pt. 136, Appendix B within 1 year from the time of sample analysis. The MDL study must be performed using the same instruments to be used for the samples.

The MDL results must meet the quantitation limits required in this technical specification. The MDL raw data deliverables must be submitted with the first data package.

2. The laboratory must determine the percent moisture of the soil sample using an aliquot from the 2-ounce sample container (unpreserved sample). Results for soil samples must be reported on a dry weight basis.

3. TtNUS will provide a field worksheet with the information about amount of preservative added and the vial-tare weights before and after adding the soil samples. The laboratory must check the weight of the sample vials to the nearest 0.1g before VOC analysis to ensure that the sample integrity was not compromised during shipping and storage. The laboratory must fill out the last column of the TtNUS field worksheet and return it with the data package deliverables. If the tare weight difference between the field and the laboratory value is greater than 0.2 g, the laboratory must contact TtNUS for further instructions.

4. A low level concentration VOC analysis must be performed for all soil samples. If some target compounds are above the calibration range, the medium level methanol-preserved aliquot must be analyzed. Results from both analyses must be reported. An aliquot of 200 microliter of the methanol-preserved sample should be analyzed in order to obtain lower quantitation limits.

5. A five-level initial calibration standard (purged at 40 degrees centigrade for the low soil VOCs) must be analyzed. The relative standard deviations and relative response factors must meet the requirements of the CLP SOW OLM04.2.

6. The continuing calibration standard must be performed according to the CLP procedure. The percent difference and the relative response factor criteria must meet the requirements of the CLP SOW OLM04.2.

7. The surrogates, matrix spike, and internal standard solutions should be added to the vials just before sample analysis. The concentration and volume of the spiking solutions used in the closed-system purge-and-trap device should be adjusted to meet the CLP requirements.

8. The CLP SOW must be followed for the matrix Spike/Matrix Spike Duplicate VOC analysis. Additional low concentration preserved sample vials will be provided for the matrix spike/matrix spike duplicate analyses.

9. Tentatively identified compounds for the volatile analysis must be performed and reported as specified in the CLP SOW.

6.2 SVOC, Pesticide/PCBs, and Metals Sediment and NAPL Analysis

1. The laboratory must decant and discard any free liquid on the sediment prior to sample homogenization and analysis. The percent moisture of the sediment samples must be determined prior to sample extraction, digestion, or analysis. A sediment sample equivalent to 20 g (dry solids) must be extracted for SVOC and pesticide/PCB analysis. The amount of anhydrous sodium sulfate used for the extractions must also be increased. In addition to increasing the extraction sample aliquot, the final SVOC or pesticide/PCB extract volume may be reduced to achieve the required quantitation limits. The amount of surrogate and MS/MSD spiked standards should be reduced proportionally if the final concentration volume is decreased to maintain the surrogate concentration within the calibration range of the instrument.

2. A sediment sample aliquot equivalent to at least 0.5 grams (dry solids) must be digested for metal analysis to compensate for the high percent on water in the samples.

3. The subcontract should screen the NAPL samples to estimate the aliquot required for the NAPL analysis in order to obtain the lowest possible reporting limits.

6.3 AVS/SEM Analysis

1. The colorimetric or the ion-selective electrode procedure for hydrogen sulfide analysis must be performed to achieve the required reporting limit of 1.0 μmole AVS/g dry weight.

2. A Method Detection Limit (MDL) should be performed for AVS as per Section 10.2.2 of the method in Attachment B. The MDL study must be included with the data package.

3. The standard calibration curve for the colorimetric method must include a laboratory blank and five standard solutions with concentrations covering the expected range of the samples. The lowest calibration standard must be equal to the reporting limit. The correlation coefficient of the calibration curve must be greater than or equal to 0.995. The sulfide electrode must be calibrated as per Section 9.2 of the procedure. If a sample concentration falls outside the calibration range, either dilute the sample or recalibrate using standards that span the desired range. Report the source of the calibration standards.

4. A check standard from a separate source than the calibration standard must be analyzed after the calibration curve, but prior to a set of 20 samples. The check standard concentration must be at the mid-range of the calibration curve. The check standard recovery result must be within 15 percent of the true value. If the check standard does not meet the criterion, a new standard curve must be generated. The check standard criterion must be met prior to sample analysis. Report the source of the check standard.

5. One method blank must be analyzed for each batch (20 samples or less) prepared at one time. The method blank must be brought through the entire preparation and analytical procedure. If the method blank contamination is above 0.5 times the required reporting limit, corrective actions must be implemented and all associated samples re-analyzed.

6. One sample per 20 samples must be analyzed in duplicate. The RPD must be less than or equal to 20 percent. If this criterion is not met, reanalyze both the sample and the duplicate.

7. One matrix spike must be analyzed every 20 samples. The spike concentration must be near the mid-range of the standard calibration curve. The percent recovery must be within 80-120. If this criterion is not met, reanalyze a new matrix spiked sample.

8. After the generation of sulfide has been completed, filter the sediment suspension as per Section 14 of the procedure and determine the concentration of the ~~TAL~~ metals by the procedure described in the CLP ILM04.1.

9. Report the concentration of each TAL metal as mg/Kg and as µmole/g of dry sediment.

6.4 Total Organic Carbon (Lloyd Kahn Method, Methods 415.1 and 415.2)

1. The TOC sediment sample aliquot must be adjusted to compensate for the high moisture content of the sample based on the percent solids results. Report the TOC results on dry weight basis.

2. Each sample must be analyzed in duplicate. The RPD must be calculated and reported. The RPD must be less than or equal to 20 percent. If the criterion is not met, reanalyze both the sample and the duplicate. If the RPD criterion is still not met, flag the sample and duplicate results with a "*". Report both values and the average value for sediments in mg/kg (on a dry weight basis) and mg/L for the water samples.

3. The standard calibration curve should include a laboratory blank and five standards. The lowest standard must be equal to the reporting limit. The correlation coefficient must be greater than or equal to 0.995. If the criterion is not met, generate a new standard curve and reanalyze the samples. If a sample falls outside of the calibration range, either use smaller sample aliquot (no less than 50 percent of what the method specifies) or recalibrate using standards that span the desired range. Report the source of the calibration standards.

4. An EPA check standard (from a separate source than the calibration standard), at a concentration two or three times the required quantitation limit must be analyzed after the standards and prior to blank and sample analysis, and after the last sample in the analytical sequence. The recovery results must agree within 15 percent of the true value. If recovery criterion is not met, a new standard curve must be generated. If the check standard analyzed at the end of the analytical sequence does not meet the criterion, reanalyze all samples, blanks, and check standards. The check sample must meet the criterion prior to sample analysis. Report the source of the check standard.

5. A method blank must be analyzed prior to sample analysis and every 20 samples. The blank is to be carried through the entire preparation and analytical procedure. Corrective actions must be taken if blank contamination is greater than half the required quantitation limits.

6. One matrix spike for every 20 samples must be performed. The matrix spike sample should be spiked at the middle-range standard concentration or at twice the sample concentration, whichever is higher. Report the results for the spike and unspiked sample and the percent recovery. The percent recovery must be within 80 to 120 percent.

6.5 Grain Size Distribution (ASTM D422-63) Analysis

1. Sieve and hydrometer analysis is requested. Sieve requirements are specified in Section 3.6 of Method ASTM D422-63. For quantitative determination of the distribution of particle sizes larger than 75 μm retained on the No. 200 sieve, follow the procedure specified in Section 6.0 of the Method.

2. The hydrometer portion of the analysis must be performed with an ASTM approved hydrometer (Section 3.3 of the ASTM method). The origin, model, serial number, and manufacturer must be recorded on the data sheets. The hydrometer must be corrected as specified in the method.

3. The analytical balance used to determine the mass of each fraction must comply with the requirements described in Section 3.1 of Method ASTM D422-63. The balance must be checked daily prior to weight determination with class "S" weights and the calibration must be within the manufacturer's tolerance limits, or the balance must be calibrated. The calibration must be recorded and reported.

4. One in every 20 field samples must be analyzed as a laboratory duplicate. Both sample results must be reported.

5. The thermometer must be certified accurate 1^0F (0.5^0C) and must be checked daily.

6. The water bath must be kept at a constant temperature of 20^{0}C and the temperature must be checked before and after the analysis of each sample and be recorded.

6.6 Alkalinity (Method 310.1) Analysis

1. The alkalinity analysis must begin as soon as possible since atmospheric carbon dioxide can affect the results. If portions of the same sample container are to be used for other parameters, complete the pH and the alkalinity analyses first.

2. Appropriate aliquots should be used to avoid a titration volume greater than 50 milliliters.

3. Follow Section 4.1 of Method 310.1 for pH meter specifications. At least two different pH solutions must be used for instrument calibration. The solutions must bracket the expected pH of the samples. Repeat adjustments of successive portions of the two buffer solutions until readings are within 0.05 pH units of the buffer solution value. A separate source pH check standard must then be analyzed to verify the calibration. If the pH meter is not equipped with temperature compensation, all calibration solutions and standards must be read at the same temperature. All standardized procedures must be documented in a laboratory notebook and provided with the final data package.

4. A method blank using laboratory pure water (deionized distilled) must be performed using all reagents. The method blank should be run in conjunction with the standardization and before every 20 samples. The results from the method blank can not be above one half the reporting limit of the method or the source of water must be changed to a cleaner source and all samples associated with the blank must be reanalyzed.

5. One sample in 20 field samples must be analyzed in duplicate. The percent difference must be less than 20 percent. If the limits are exceeded, the analysis of both samples must be repeated. If the results are still greater than 20 percent D, flag the results with "*".

6. An EPA check standard or a 2.0 mg/L calcium carbonate standard (from a source independent of that used to check the normality of the titrant) must be analyzed with

each analytical batch of 20 samples or less, prior to blank and sample analysis. The recovery must be within 15 percent of the true value. The EPA check standard must also be analyzed once for every ten field samples and at the end of the analytical sequence. If the recovery criteria are not met, a normality check must be performed, and another EPA check standard, method blank, and all associated field samples must be analyzed. Criteria must be met prior to sample analysis.

6.7 Sulfide Method 376.1 or 376.2 Analysis

1. The pH of the aqueous samples must be checked immediately after sample receipt and values reported. Sample pH must be adjusted if necessary.

2. A normality check of the titrant must be performed prior to sample analysis for Method 376.1. If the concentration is within 10 percent of that initially determined, the newly determined value must be used in the calculations. If the concentration is not within 10 percent, a fresh titrant must be prepared. The normality of the fresh titrant must be within 20 percent of that specified by the method.

3. A five-point calibration curve must be generated every day of sample analysis for Method 376.2. The lowest standard must be equal to the reporting limit and the range of the standard concentration must bracket the sample concentrations. A blank also must be included in the calibration curve. The correlation coefficient must be greater than 0.995.

4. An EPA check standard must be analyzed after the calibration standards and blank but before samples are processed, as well as after every ten samples, and at the end of the analytical sequence. If a check sample is not available, a 0.1 mg/L standard may be used from a source independent of the calibration or normality check standards. Results must agree within 15 percent of the true value. If the recovery criteria are not met, a new normality check or calibration curve must be performed, and another EPA check standard, method blank, and all associated field samples analyzed. Criteria must be met prior to sample analysis.

5. A method blank using laboratory pure water (deionized distilled) must be performed using all reagents. The method blank should be run in conjunction with the

standardization and before every 20 samples. The method blank results must be equal to or less than half the reporting limit of the method or the source of water must be changed to a cleaner source and all samples associated with the blank must be reanalyzed.

6. One in every 20 field samples must be analyzed in duplicate. The percent difference must be less than 20 percent. If the limits are exceeded, the analysis of both samples must be repeated.

7. A matrix spike must be performed at a frequency of once for every 20 samples. The sample must be fortified at a concentration of 0.5 mg/L and the recovery must be within 80-120 percent. If the spike is outside the limits, repeat the matrix spike analysis. If the results are still outside the limits, flag the results with a "#".

7.0 QUALITY CONTROL REQUIREMENTS

The subcontractor will allow Tetra Tech NUS and/or the U.S. EPA complete and clear access to the laboratory facility, subcontractor personnel, equipment, and documentation prior to and throughout the duration of the project. The subcontractor may be audited with respect to compliance with all the requirements in this technical specification and with the subcontractor's Quality Assurance Plan.

All quality control criteria specified in the referenced procedures (Section 4.0) and in the special technical instructions (Section 6.0) must be met.

8.0 ANALYTICAL DELIVERABLES

The following items are required as deliverables for each data package:

1. All deliverable requirements in the CLP SOWs OLM04.2 and ILM04.1 must be provided.

2. The required MDL results and raw data must be submitted with the first data package deliverables

3. A case narrative explaining the analytical method, problems encountered, and problem resolutions. The narrative must include a table showing the laboratory sample numbers and their corresponding Tetra Tech NUS sample numbers.

4. All sample tracking reports, original signed chain-of-custody forms, custody seals, airbills, and any telephone logs referring to the samples must be delivered with the data package.

5. Copies of the sample log in sheets indicating the time, date, and condition and temperature of the sample at arrival.

6. The following information must be provided: bench sheets for sample digestion, sample extraction, sample preservation pH values, surrogate solution identification and surrogate amount added, matrix spike solution identification, and matrix spike/matrix spike duplicate amounts added, quantitation dates and instrument run times, and percent moisture analysis bench sheets.

7. The source of all standard materials must be documented and reported. The concentration of all standards used must be indicated.

8. The data package must be paginated and of good readable quality. Database files containing all sample results in the format described in Attachment D must be provided.

9. Any missing deliverable must be submitted to Tetra Tech NUS within 48 hours from the time requested at no additional charge.

10. Complete Sample Delivery Group File (CSF) Audit. Due to the litigative nature of each Superfund site, Region I EPA requires that all analytical data (tabulated forms and supporting raw data) be delivered with each SDG. The CSF forms must accompany each data package (Attachment C). The laboratory using these audit forms must show that each piece of sample data, raw data, calibration data, QC data, and any other requirement of the SOW or analytical specifications are included in the data package.

9.0 EXCEPTIONS

If quality control requirements or limits are exceeded, or if field samples are destroyed or lost, or if matrix interference is suspected, or any other technical problems arise that require changes in the technical specifications, contact:

Lucy Guzman
Tetra Tech NUS, Inc.
(978) 658-7899

ATTACHMENT A
TOC METHOD

APPENDIX C-2

SUBCONTRACT LABORATORY STANDARD OPERATING PROCEDURES

KATAHDIN ANALYTICAL SERVICES, INC.
STANDARD OPERATING PROCEDURE

SOP Number: CA-214
Revision History
Cover Page
Page 1

TITLE: CLOSED-SYSTEM PURGE-AND-TRAP AND EXTRACTION FOR VOLATILE ORGANICS IN SOIL AND WASTE SAMPLES USING SW846 METHOD 5035

Prepared By: GC/MS Group Date: 07/98

Approved By:

Group Supervisor: [signature] Date: 072398

Operations Manager: [signature] Date: 7/23/98

QA Officer: Deborah J. Nadeau Date: 7·23·98

General Manager: [signature] Date: 7/23/98

Revision History:

Revision	Changes	Authorization	Date

TITLE: **CLOSED-SYSTEM PURGE-AND-TRAP AND EXTRACTION FOR VOLATILE ORGANICS IN SOIL AND WASTE SAMPLES USING SW846 METHOD 5035**

Please acknowledge receipt of this standard operating procedure by signing and dating both of the spaces provided. Return the bottom half of this sheet to the QA Department.

I acknowledge receipt of copy 1 of document **SOP CA-214-00**, titled **CLOSED-SYSTEM PURGE-AND-TRAP AND EXTRACTION FOR VOLATILE ORGANICS IN SOIL AND WASTE SAMPLES USING SW846 METHOD 5035.**

Recipient: _____ Date: _____

KATAHDIN ANALYTICAL SERVICES, INC.
STANDARD OPERATING PROCEDURE

I acknowledge receipt of copy 1 of document **SOP CA-214-00**, titled **CLOSED-SYSTEM PURGE-AND-TRAP AND EXTRACTION FOR VOLATILE ORGANICS IN SOIL AND WASTE SAMPLES USING SW846 METHOD 5035.**

Recipient: _____ Date: _____

TITLE: **CLOSED-SYSTEM PURGE-AND-TRAP AND EXTRACTION FOR VOLATILE ORGANICS IN SOIL AND WASTE SAMPLES USING SW846 METHOD 5035**

1.0 SCOPE AND APPLICATION

This method describes a closed-system purge-and-trap process for the analysis of volatile organic compounds (VOCs) in solid materials (e.g., soils, sediments, and solid waste). While the method is designed for use on samples containing low levels of VOCs, procedures are also provided for collecting and preparing solid samples containing high concentrations of VOCs and for oily wastes. For these high concentration and oily materials, sample collection and preparation are performed using the procedures described here, and sample introduction is performed using the aqueous purge-and-trap procedure in Method 5030. These procedures may be used in conjunction with any appropriate determinative gas chromatographic procedure, including, but not limited to, Methods 8015, 8021, and 8260.

The low soil method utilizes a hermetically-sealed sample vial, the seal of which is never broken from the time of sampling to the time of analysis. Since the sample is never exposed to the atmosphere after sampling, the losses of VOCs during sample transport, handling, and analysis are negligible. The applicable concentration range of the low soil method is dependent on the determinative method, matrix, and compound. However, it will generally fall in the 0.5 to 200 μg/kg range.

Procedures are included for preparing high concentration samples for purging by Method 5030. High concentration samples are those containing VOC levels of >200 μg/kg.

Procedures are also included for addressing oily wastes that are soluble in a water-miscible solvent. These samples are also purged using Method 5030.

Method 5035 can be used for most volatile organic compounds that have boiling points below 200°C and that are insoluble or slightly soluble in water. Volatile, water-soluble compounds can be included in this analytical technique. However, quantitation limits (by GC or GC/MS) are approximately ten times higher because of poor purging efficiency.

The closed-system purge-and-trap equipment employed for low concentration samples is not appropriate for soil samples preserved in the field with methanol. Such samples should be analyzed using Method 5030 (see the note in Sec. 6.2.2).

1.1 Responsibilities

This method is restricted to use by, or under the supervision of analysts experienced in the analyses using Methods 8015, 8021, 8260 and CLP. Each analyst must demonstrate and document their ability to generate acceptable results with this method. Refer to Katahdin SOP QA-805, current revision, "Personnel Training".

TITLE: **CLOSED-SYSTEM PURGE-AND-TRAP AND EXTRACTION FOR VOLATILE ORGANICS IN SOIL AND WASTE SAMPLES USING SW846 METHOD 5035**

It is the responsibility of all Katahdin technical personnel involved in analysis of soils by method 5035 to read and understand this SOP, adhere to the procedures outlined, and to properly document their data in the appropriate lab notebook. Any deviations from the test or irregularities with the samples should also be recorded in the lab notebook and reported to the group supervisor or designated qualified data reviewer responsible for this data.

It is the responsibility of the Group Supervisor to oversee that members of their group follow this SOP, that their work is properly documented and to indicate periodic review of the associated logbooks.

1.2 Safety

Users of this procedure must be cognizant of inherent laboratory hazards, proper disposal procedures for contaminated materials and appropriate segregation of hazardous wastes. The toxicity or carcinogenicity of each reagent used in this method has not been precisely defined; however, each chemical should be treated as a potential health hazard. A reference file of material safety data sheets is available to all personnel involved in the chemical analysis. Everyone involved with the procedure must be familiar with the MSDSs for all the materials used in this procedure.

Each qualified analyst or technician must be familiar with Katahdin Analytical safety procedures and the Katahdin Chemical Hygiene Plan and follow appropriate procedures such as wearing safety glasses and gloves when working with chemicals or near an instrument. Food or drink are not allowed in the laboratory. Each analyst should know the location of a respirator and be trained in its proper use as well as the location and use of all safety equipment.

1.3 Waste Disposal

Wastes generated during the preparation of samples must be disposed of in accordance with the procedures described in the current revision of the Katahdin Chemical Hygiene Plan and Safety Manual.

2.0 SUMMARY OF METHOD

2.1 Low concentration soil method - generally applicable to and soils and other solid samples with VOC concentrations in the range of 0.5 to 200 μg/kg. Volatile organic compounds (VOCs) are determined by collecting an approximately 5-g sample, weighed in the field at the time of collection, and placing it in a pre-weighed vial with a septum-sealed screw-cap

(see Sec. 4) that already contains a stirring bar and a sodium bisulfate preservative solution. If the samples are sent to the laboratory in an Encore sampling device, the laboratory extrudes the sample into this vial containing a stirring bar and a sodium bisulfate preservative solution. The entire vial is then placed, unopened, into the instrument carousel. Immediately before analysis, organic-free reagent water, surrogates, and internal standards (if applicable) are automatically added without opening the sample vial. The vial containing the sample is heated to 40° and the volatiles purged into an appropriate trap using an inert gas combined with agitation of the sample. Purged components travel via a transfer line to a trap. When purging is complete, the trap is heated and backflushed with helium to desorb the trapped sample components into a gas chromatograph for analysis by an appropriate determinative method.

2.2 High concentration soil method - generally applicable to soils and other solid samples with VOC concentrations greater than 200 μg/kg. The sample introduction technique in Sec. 2.1 is not applicable to all samples, particularly those containing high concentrations (generally greater than 200 μg/kg) of VOCs which may overload either the volatile trapping material or exceed the working range of the determinative instrument system (e.g., GC/MS, GC/FID, GC/EC, etc.). In such instances, this method describes two sample collection options and the corresponding sample purging procedures.

2.2.1 The first option is to collect a bulk sample in a vial or other suitable container without the use of the preservative solution described in Sec. 2.1. A portion of that sample is removed from the container in the laboratory and is dispersed in a water-miscible solvent to dissolve the volatile organic constituents. An aliquot of the solution is added to 5 mL of reagent water in a purge tube. Surrogates and internal standards (if applicable) are added to the solution, then purged using Method 5030, and analyzed by an appropriate determinative method. Because the procedure involves opening the vial and removing a portion of the soil, some volatile constituents may be lost during handling.

2.2.2 The second option is to collect an approximately 5-g sample in a pre-weighed vial with a septum-sealed screw-cap (see Sec 4) that contains a known aliquot of a water-miscible organic solvent (e.g., methanol). At the time of analysis, surrogates are added to the vial, then an aliquot of the solvent is removed from the vial, purged using Method 5030 and analyzed by an appropriate determinative method.

2.3 High concentration oily waste method - generally applicable to oily samples with VOC concentrations greater than 200 μg/kg that can be diluted in a water-miscible solvent. Samples that are comprised of oils or samples that contain significant amounts of oil present additional analytical challenges. This procedure is generally appropriate for such samples when they are soluble in a water-miscible solvent.

2.3.1 After demonstrating that a test aliquot of the sample is soluble in methanol or polyethylene glycol (PEG), a separate aliquot of the sample is spiked with surrogates and diluted in the appropriate solvent. An aliquot of the solution is added to 5 mL of reagent water in a purge tube, taking care to ensure that a floating layer of oil is not present in the purge tube. Internal standards (if applicable) are added to the solution which is then purged using Method 5030 and analyzed by an appropriate determinative method.

2.3.2 Samples that contain oily materials that are not soluble in water-miscible solvents must be prepared according to Method 3585.

3.0 INTERFERENCES

3.1 Impurities in the purge gas and from organic compounds out-gassing from the plumbing ahead of the trap account for the majority of contamination problems. The analytical system must be demonstrated to be free from contamination under the conditions of the analysis by running method blanks. The use of non-polytetrafluoroethylene (non-PTFE) plastic coating, non-PTFE thread sealants, or flow controllers with rubber components in the purging device must be avoided, since such materials out-gas organic compounds which will be concentrated in the trap during the purge operation. These compounds will result in interferences or false positives in the determinative step.

3.2 Samples can be contaminated by diffusion of volatile organics (particularly methylene chloride and fluorocarbons) through the septum seal of the sample vial during shipment and storage. A trip blank prepared from organic-free reagent water and carried through sampling and handling protocols serves as a check on such contamination.

3.3 Contamination by carryover can occur whenever high-concentration and low-concentration samples are analyzed in sequence. Where practical, samples with unusually high concentrations of analytes should be followed by an analysis of organic-free reagent water to check for cross-contamination. If the target compounds present in an unusually concentrated sample are also found to be present in the subsequent samples, the analyst must demonstrate that the compounds are not due to carryover. Conversely, if those target compounds are not present in the subsequent sample, then the analysis of organic-free reagent water is not necessary.

3.4 The laboratory where volatile analysis is performed should be free of solvents. The analytical and sample storage area should be isolated from all atmospheric sources of methylene chloride, otherwise random background levels will result. Since methylene chloride will permeate through PTFE tubing, all GC carrier gas lines and purge gas

plumbing should be constructed of stainless steel or copper tubing. Laboratory workers' clothing previously exposed to methylene chloride fumes during common liquid/liquid extraction procedures can contribute to sample contamination. The presence of other organic solvents in the laboratory where volatile organics are analyzed will also lead to random background levels and the same precautions must be taken.

4.0 APPARATUS AND MATERIALS

4.1 Sample Containers

The specific sample containers required will depend on the purge-and-trap system to be employed (see Sec. 4.2). Our laboratory is equipped with two Archon model 5100 purge and trap autosampler systems. A standard 40 ml VOA vial is used (e.g. ESS pre-cleaned certified 40 ml clear Type I borosilicate glass vials, open-top/polypropylene with 0.125 inch septa).

4.2 Purge-and-Trap System

The purge-and-trap system consists of a unit that automatically adds water, surrogates, and internal standards to a vial containing the sample, purges the VOCs using an inert gas stream while agitating the contents of the vial, and also traps the released VOCs for subsequent desorption into the gas chromatograph. The two Archon systems at Katahdin meet the following criteria:

4.2.1 The purging device should be capable of accepting a vial sufficiently large to contain a 5-g soil sample plus a magnetic stirring bar and 10 mL of water. The device must be capable of heating a soil vial to 40°C and holding it at that temperature while the inert purge gas is allowed to pass through the sample. The device should also be capable of introducing at least 5 mL of organic-free reagent water into the sample vial while trapping the displaced headspace vapors. It must also be capable of agitating the sealed sample during purging, (e.g., using a magnetic stirring bar added to the vial prior to sample collection, sonication, or other means). The analytes being purged must be quantitatively transferred to an absorber trap. The trap must be capable of transferring the absorbed VOCs to the gas chromatograph (see 4.2.2).

4.2.2 A variety of traps and trapping materials may be employed with this method. The choice of trapping material may depend on the analytes of interest. Whichever trap is employed, it must demonstrate sufficient adsorption and desorption characteristics to meet the quantitation limits of all the target analytes for a given project and the QC requirements in Method 8000 and the determinative method.

The most difficult analytes are generally the gases, especially dichlorodifluoromethane. The trap must be capable of desorbing the late eluting target analytes.

NOTE: Check the responses of the brominated compounds when using alternative charcoal traps (especially Vocarb 4000), as some degradation has been noted when higher desorption temperatures (especially above 240°C - 250°C) are employed. 2-Chloroethyl vinyl ether is degraded on Vocarb 4000 but performs adequately when Vocarb 3000 is used. The primary criterion, as stated above, is that all target analytes meet the sensitivity requirements for a given project.

4.2.2.1 The standard trap used in other EPA purge-and-trap methods is also acceptable. That trap is 25 cm long and has an inside diameter of at least 0.105 in. Starting from the inlet, the trap contains the equal amounts of the adsorbents listed below. It is recommended that 1.0 cm of methyl silicone-coated packing (35/60 mesh, Davison, grade 15 or equivalent) be inserted at the inlet to extend the life of the trap. If the analysis of dichlorodifluoromethane or other fluorocarbons of similar volatility is not required, then the charcoal can be eliminated and the polymer increased to fill 2/3 of the trap. If only compounds boiling above 35° are to be analyzed, both the silica gel and charcoal can be eliminated and the polymer increased to fill the entire trap.

4.2.2.1.1 2,6-Diphenylene oxide polymer - 60/80 mesh, chromatographic grade (Tenax GC or equivalent).

4.2.2.1.2 Methyl silicone packing - OV-1 (3%) on Chromosorb-W, 60/80 mesh or equivalent.

4.2.2.1.3 Coconut charcoal - Prepare from Barnebey Cheney, CA-580-26, or equivalent, by crushing through 26 mesh screen.

4.2.2.2 Trapping materials other than those listed above also may be employed, provided that they meet the specifications in Sec. 4.2.3, below.

4.2.3 The desorber for the trap must be capable of rapidly heating the trap to the temperature recommended by the trap material manufacturer, prior to the beginning of the flow of desorption gas. Several commercial desorbers (purge-and-trap units) are available.

4.3 Syringe and Syringe Valves

4.3.1 25-mL glass hypodermic syringes with Luer-Lok (or equivalent) tip (other sizes are acceptable depending on sample volume used).

4.3.2 2-way syringe valves with Luer ends.

4.3.3 25-µL micro syringe with a 2 inch x 0.006 inch ID, 22° bevel needle (Hamilton #702N or equivalent).

4.3.4 Micro syringes - 10-, 100-µL.

4.3.5 Syringes - 0.5-, 1.0-, and 5-mL, gas-tight with shut-off valve.

4.4 Miscellaneous

4.4.1 Glass vials

4.4.1.1 60-mL, septum-sealed, to collect samples for screening, dry weight determination.

4.4.1.2 40-mL, screw-cap, PTFE lined, septum-sealed. Examine each vial prior to use to ensure that the vial has a flat, uniform sealing surface.

4.4.2 Top-loading balance - Capable of accurately weighing to 0.01 g.

4.4.3 Glass scintillation vials - 20-mL, with screw-caps and PTFE liners, or glass culture tubes with screw-caps and PTFE liners, for dilution of oily waste samples.

4.4.4 Volumetric flasks - Class A, 10-mL and 100-mL, with ground-glass stoppers.

4.4.5 2-mL glass vials, for GC autosampler - Used for oily waste samples extracted with methanol or PEG.

4.4.6 Spatula, stainless steel - narrow enough to fit into a sample vial.

4.4.7 Disposable Pasteur pipettes.

4.4.8 Magnetic stirring bars - PTFE- or glass-coated, of the appropriate size to fit the sample vials. Consult manufacturer's recommendation for specific stirring bars. Stirring bars may be reused, provided that they are thoroughly cleaned between

uses. Consult the manufacturers of the purging device and the stirring bars for suggested cleaning procedures.

4.5 Field Sampling Equipment

4.5.1 EnCore™ sampler - (En Chem, Inc., 1795 Industrial Drive, Green Bay, WI 54302), or equivalent.

4.5.2 Alternatively, disposable plastic syringes with a barrel smaller than the neck of the soil vial may be used to collect the sample. The syringe end of the barrel is cut off prior to sampling. One syringe is needed for each sample aliquot to be collected.

4.5.3 Portable balance - For field use, capable of weighing to 0.01 g.

4.5.4 Balance weights - Balances employed in the field should be checked against an appropriate reference weight at least once daily, prior to weighing any samples, or as described in the sampling plan. The specific weights used will depend on the total weight of the sample container, sample, stirring bar, reagent water added, cap, and septum.

5.0 REAGENTS

5.1 Organic-free reagent water - All references to water in this method refer to organic-free reagent water.

5.2 Methanol, CH_3OH - purge-and-trap quality or equivalent. Store away from other solvents.

5.3 Polyethylene glycol (PEG), $H(OCH_2CH_2)_nOH$ - free of interferences at the detection limit of the target analytes.

5.4 Low concentration sample preservative

5.4.1 Sodium bisulfate, $NaHSO_4$ - ACS reagent grade or equivalent.

5.4.2 The preservative should be added to the vial prior to shipment to the field, and must be present in the vial prior to adding the sample.

5.5 See the determinative method for guidance on internal standards and surrogates to be employed in this procedure.

TITLE: **CLOSED-SYSTEM PURGE-AND-TRAP AND EXTRACTION FOR VOLATILE ORGANICS IN SOIL AND WASTE SAMPLES USING SW846 METHOD 5035**

6.0 SAMPLE COLLECTION, PRESERVATION AND HANDLING

The low concentration portion of this method employs sample vials that are filled and weighed in the field and never opened during the analytical process. As a result, sampling personnel should be equipped with a portable balance capable of weighing to 0.01 g.

6.1 Preparation of sample vials

The specific preparation procedures for sample vials depend on the expected concentration range of the sample, with separate preparation procedures for low concentration soil samples and high concentration soil and solid waste samples. Sample vials should be prepared in a fixed laboratory or other controlled environment, sealed, and shipped to the field location. Gloves should be worn during the preparation steps.

6.1.1 Low concentration soil samples

The following steps apply to the preparation of vials used in the collection of low concentration soil samples to be analyzed by the closed-system purge-and-trap equipment described in Method 5035.

6.1.1.1 Add a clean magnetic stirring bar to each clean vial.

6.1.1.2 Add preservative to each vial. The preservative is added to each vial prior to shipping the vial to the field. Add approximately 1 g of sodium bisulfate to each vial. If samples markedly smaller or larger than 5 g are to be collected, adjust the amount of preservative added to correspond to approximately 0.2 g of preservative for each 1 g of sample. Enough sodium bisulfate should be present to ensure a sample pH of #2.

6.1.1.3 Add 5 mL of organic-free reagent water to each vial. The water and the preservative will form an acid solution that will reduce or eliminate the majority of the biological activity in the sample, thereby preventing biodegradation of the volatile target analytes.

6.1.1.4 Seal the vial with the screw-cap and septum seal.

6.1.1.5 Affix a label to each vial. This eliminates the need to label the vials in the field and assures that the tare weight of the vial includes the label.

(The weight of any markings added to the label in the field is negligible). It is important that labels and tape not cover the junction of the screw top and vial. Labels and tape must also be applied smoothly (i.e. no wrinkles) to prevent autosampler failures.

6.1.1.6 Weigh the prepared vial to the nearest 0.01 g, record the tare weight, and write it on the label.

6.1.1.7 Because volatile organics will partition into the headspace of the vial from the aqueous solution and will be lost when the vial is opened, surrogates, matrix spikes, and internal standards (if applicable) should only be added to the vials after the sample has been added to the vial. These standards should be introduced back in the laboratory, either manually by puncturing the septum with a small-gauge needle or automatically by the sample introduction system, just prior to analysis.

6.1.2 High concentration soil samples collected without a preservative:

When high concentration samples are collected without a preservative, a variety of sample containers may be employed, including 60-mL glass vials with septum seals (see Sec. 4.4).

6.1.3 High concentration soil samples collected and preserved in the field:

The following steps apply to the preparation of vials used in the collection of high concentration soil samples to be preserved in the field with methanol and analyzed by the aqueous purge-and-trap equipment described in Method 5030.

6.1.3.1 Add 10 mL of methanol to each vial.

6.1.3.2 Seal the vial with the screw-cap and septum seal.

6.1.3.3 Affix a label to each vial. This eliminates the need to label the vials in the field and assures that the tare weight of the vial includes the label. (The weight of any markings added to the label in the field is negligible).

6.1.3.4 Weigh the prepared vial to the nearest 0.01 g, record the tare weight, and write it on the label.

NOTE: Vials containing methanol should be weighed a second time on the day that they are to be used. Vials found to have lost methanol (reduction in weight of >0.01 g) should not be used for sample collection.

6.1.3.5 Surrogates, internal standards and matrix spikes (if applicable) should be added to the sample after it is returned to the laboratory and prior to analysis.

6.1.4 Oily waste samples

When oily waste samples are known to be soluble in methanol or PEG, sample vials may be prepared as described in Sec. 6.1.3, using the appropriate solvent. However, when the solubility of the waste is unknown, the sample should be collected without the use of a preservative, in a vial such as that described in Sec. 6.1.2.

6.2 Sample collection

Collect the sample according to the procedures outlined in the sampling plan. As with any sampling procedure for volatiles, care must be taken to minimize the disturbance of the sample in order to minimize the loss of the volatile components. Several techniques may be used to transfer a sample to the relatively narrow opening of the low concentration soil vial. These include devices such as the EnCore™ sampler, the Purge-and-Trap Soil Sampler™, and a cut plastic syringe. Always wear gloves whenever handling the tared sample vials.

6.2.1 Low concentration soil samples

6.2.1.1 Using an appropriate sample collection device, collect approximately 5g of sample as soon as possible after the surface of the soil or other solid material has been exposed to the atmosphere: generally within a few minutes at most. Carefully wipe the exterior of the sample collection device with a clean cloth or towel.

6.2.1.2 Using the sample collection device, add about 5 g (2 - 3 cm) of soil to the sample vial containing the preservative solution. Quickly brush any soil off the vial threads and immediately seal the vial with the septum and screw-cap. Store samples on ice at 4°C.

NOTE: Soil samples that contain carbonate minerals (either from natural sources or applied as an amendment) may effervesce upon contact with the acidic preservative solution in the low concentration sample vial. If the amount of gas generated is very small

(i.e., several mL), any loss of volatiles as a result of such effervescence may be minimal if the vial is sealed quickly. However, if larger amounts of gas are generated, not only may the sample lose a significant amount of analyte, but the gas pressure may shatter the vial if the sample vial is sealed. Therefore, when samples are known or suspected to contain high levels of carbonates, a test sample should be collected, added to a vial, and checked for effervescence. If a rapid or vigorous reaction occurs, discard the sample and collect low concentration samples in vials that do not contain the preservative solution.

6.2.1.3 When practical, use a portable balance to weigh the sealed vial containing the sample to ensure that 5.0 ± 0.5 g of sample were added. The balance should be calibrated in the field using an appropriate weight for the sample containers employed (Sec. 4.5.5). Record the weight of the sealed vial containing the sample to the nearest 0.01 g.

6.2.1.4 Alternatively, collect several trial samples with plastic syringes. Weigh each trial sample and note the length of the soil column in the syringe. Use these data to determine the length of soil in the syringe that corresponds to 5.0 ± 0.5 g. Discard each trial sample.

6.2.1.5 As with the collection of aqueous samples for volatiles, collect at least two replicate samples. This will allow the laboratory an additional sample for reanalysis. The second sample should be taken from the same soil stratum or the same section of the solid waste being sampled, and within close proximity to the location from which the original sample was collected.

6.2.1.6 In addition, since the soil vial cannot be opened without compromising the integrity of the sample, at least one additional aliquot of sample must be collected for screening, dry weight determination, and high concentration analysis (if necessary). This third aliquot may be collected in a 60-mL glass vial or a third 40-mL soil sample vial. However, this third vial must not contain the sample preservative solution, as an aliquot will be used to determine dry weight. If high concentration samples are collected in vials containing methanol, then two additional aliquots should be collected, one for high concentration analysis collected in a vial containing methanol, and another for the dry weight determination in a vial without either methanol or the low concentration aqueous preservative solution.

6.2.1.7 If samples are known or expected to contain target analytes over a wide range of concentrations, thereby requiring the analyses of multiple sample aliquots, it may be advisable and practical to take an additional

sample aliquot in a low concentration soil vial containing the preservative, but collecting only 1-2 g instead of the 5 g collected in Sec. 6.2.1.1. This aliquot may be used for those analytes that exceed the instrument calibration range in the 5-g analysis.

6.2.1.8 The EnCore™ sampler has not been thoroughly evaluated by EPA as a sample storage device. While preliminary results indicate that storage in the EnCore™ device may be appropriate for up to 48 hours, samples collected in this device should be transferred to the soil sample vials as soon as possible, or analyzed within 48 hours. It is Katahdin's protocol to transfer samples from EnCore™ samplers to properly preserved VOA vials within 48 hours of sample receipt.

6.2.1.9 The collection of low concentration soil samples in vials that contain methanol is not appropriate for samples analyzed with the closed-system purge-and-trap equipment described in this method (see Sec. 6.2.2).

6.2.2 High concentration soil samples preserved in the field:

The collection of soil samples in vials that contain methanol has been suggested by some as a combined preservation and extraction procedure. However, this procedure is not appropriate for use with the low concentration soil procedure described in this method.

NOTE: The use of methanol preservation has not been formally evaluated by EPA and analysts must be aware of two potential problems. First, the use of methanol as a preservative and extraction solvent introduces a significant dilution factor that will raise the method quantitation limit beyond the operating range of the low concentration direct purge-and-trap procedure (0.5-200 μg/kg). The exact dilution factor will depend on the masses of solvent and sample, but generally exceeds 1000, and may make it difficult to demonstrate compliance with regulatory limits or action levels for some analytes. Because the analytes of interest are volatile, the methanol extract cannot be concentrated to overcome the dilution problem. Thus, for samples of unknown composition, it may still be necessary to collect an aliquot for analysis by this closed-system procedure and another aliquot preserved in methanol and analyzed by other procedures. The second problem is that the addition of methanol to the sample is likely to cause the sample to fail the ignitability characteristic, thereby making the unused sample volume a hazardous waste.

6.2.2.1 When samples are known to contain volatiles at concentrations high enough that the dilution factor will not preclude obtaining results within the calibration range of the appropriate determinative method, a sample may be collected and immediately placed in a sample vial containing purge-and-trap grade methanol.

6.2.2.2 Using an appropriate sample collection device, collect approximately 5 g of sample as soon as possible after the surface of the soil or other solid material has been exposed to the atmosphere: generally within a few minutes at most. Carefully wipe the exterior of the sample collection device with a clean cloth or towel.

6.2.2.3 Using the sample collection device, add about 5 g (2 - 3 cm) of soil to the vial containing a known aliquot of methanol. Quickly brush any soil off the vial threads and immediately seal the vial with the septum and screw-cap. Store samples on ice at 4°C.

6.2.2.4 When practical, use a portable balance to weigh the sealed vial containing the sample to ensure that 5.0 ± 0.5 g of sample were added. The balance should be calibrated in the field using an appropriate weight for the sample containers employed (Sec. 4.5.5). Record the weight of the sealed vial containing the sample to the nearest 0.01 g.

6.2.2.5 Alternatively, collect several trial samples with plastic syringes. Weigh each trial sample and note the length of the soil column in the syringe. Use these data to determine the length of soil in the syringe that corresponds to 5.0 ± 0.5 g. Discard each trial sample.

6.2.2.6 Other sample weights and volumes of methanol may be employed, provided that the analyst can demonstrate that the sensitivity of the overall analytical procedure is appropriate for the intended application.

6.2.2.7 The collection of at least one additional sample aliquot is required for the determination of the dry weight, as described in Sec. 6.2.1.6. Samples collected in methanol should be shipped as described in Sec. 6.3, and must be clearly labeled as containing methanol, so that the samples are not analyzed using the closed-system purge-and-trap equipment described in this procedure.

6.2.3 High concentration soil sample not preserved in the field:

The collection of high concentration soil samples that are not preserved in the field generally follows similar procedures as for the other types of samples described in Secs. 6.2.1 and 6.2.2, with the obvious exception that the sample vials contain neither the aqueous preservative solution nor methanol. However, when field preservation is not employed, it is better to collect a larger volume sample, filling the sample container as full as practical in order to minimize the

headspace. Such collection procedures generally do not require the collection of a separate aliquot for dry weight determination, but it may be advisable to collect a second sample aliquot for screening purposes, in order to minimize the loss of volatiles in either aliquot.

6.2.4 Oily waste samples

The collection procedures for oily samples depend on knowledge of the waste and its solubility in methanol or other solvents.

6.2.4.1 When an oily waste is known to be soluble in methanol or PEG, the sample may be collected in a vial containing such a solvent (see Sec. 6.1.4), using procedures similar to those described in Sec. 6.2.2.

6.2.4.2 When the solubility of the oily waste is not known, the sample should either be collected in a vial without a preservative, as described in Sec. 6.2.3, or the solubility of a trial sample should be tested in the field, using a vial containing solvent. If the trial sample is soluble in the solvent, then collect the oily waste sample as described in Sec. 6.2.2. Otherwise, collect an unpreserved sample as described in Sec. 6.2.3.

6.3 Sample handling and shipment

All samples for volatiles analysis should be cooled to approximately 4°C, packed in appropriate containers, and shipped to the laboratory on ice, as described in the sampling plan. Samples should be shipped on the day of sampling if at all possible.

6.4 Sample storage

6.4.1 Once in the laboratory, store samples at 4°C until analysis. The sample storage area should be free of organic solvent vapors.

6.4.2 All samples should be analyzed as soon as practical, and within the designated holding time from collection. Samples not analyzed within the designated holding time must be noted and the data are considered minimum values.

6.4.3 When the low concentration samples are strongly alkaline or highly calcareous in nature, the sodium bisulfate preservative solution may not be strong enough to reduce the pH of the soil/water solution to below 2. Therefore, when low concentration soils to be sampled are known or suspected to be strongly alkaline or highly calcareous, additional steps may be required to preserve the samples. Such steps include: addition of larger amounts of the sodium bisulfate preservative to

non-calcareous samples, storage of low concentration samples at -10° (taking care not to fill the vials so full that the expansion of the water in the vial breaks the vial), or significantly reducing the maximum holding time for low concentration soil samples.

7.0 PROCEDURES

This section describes procedures for the low concentration soil method, the high concentration soil method, and the procedure for oily waste samples. High concentration samples are to be introduced into the GC system using Method 5030. Oily waste samples are to be introduced into the GC system using Method 5030 if they are soluble in a water-miscible solvent, or using Method 3585 if they are not.

7.1 Low concentration soil method (Approximate concentration range of 0.5 to 200 µg/kg - the concentration range is dependent upon the determinative method and the sensitivity of each analyte.)

7.1.1 Archon Operation

Prior to using this introduction technique for any GC or GC/MS method, the system must be calibrated by the analytical method to be used. When a GC/MS method is used, internal standard calibration is employed.

7.1.1.1 Select and edit one of the 30 methods available on the Archon. Edit the methods parameters to meet the needs of the analytical method for which the standards and samples will be analyzed. See the Archon operator's manual for specifics on method editing, i.e. purge time, desorb time, temperatures, etc. Once the method criteria is updated in the Archon, the standard(s) can be loaded into the sample tray. The run start and stop positions are entered into the Archon method. Press the auto key on the Archon and enter the method that was previously edited. Press enter, and the screen will scroll to start auto run. Press enter. The autosampler will run according to the method entered.

7.1.1.2 Establish the purge-and-trap instrument operating conditions. Adjust the instrument to inject 5 mL of water, to heat the sample to 40°C, and to hold the sample at 40°C for 1.5 minutes before commencing the purge process, or as recommended by the instrument manufacturer.

7.1.1.3 Carry out the purge-and-trap procedure as outlined in Secs. 7.1.2. to 7.1.4.

7.1.2 Sample purge-and-trap

This method is designed for a 5-g sample size, but smaller sample sizes may be used. The soil vial is hermetically sealed at the sampling site, and MUST remain in order to guarantee the integrity of the sample. Gloves must be worn when handling the sample vial since the vial has been tared. If any soil is noted on the or of the vial or cap, it must be carefully removed prior to weighing. Weigh the vial and contents to the nearest 0.01 g, even if the sample weight was determined in the field, and record this weight. This second weighing provides a check on the field sampling procedures and provides additional assurance that the reported sample weight is accurate. Data users should be advised on significant discrepancies between the field and laboratory weights.

7.1.2.1 Remove the sample vial from storage and allow it to warm to room temperature. Shake the vial gently, to ensure that the contents move freely and that stirring will be effective. Place the sample vial in the instrument carousel according to the manufacturer's instructions.

7.1.2.2 Without disturbing the hermetic seal on the sample vial, add 5 mL of organic-free reagent water, the internal standards, and the surrogate compounds. This is carried out using the automated sampler. Other volumes of organic-free reagent water may be used, however, it is imperative that all samples, blanks, and calibration standards have exactly the same final volume of organic-free reagent water. Prior to purging, heat the sample vial to 40°C for 1.5 minutes, or as described by the manufacturer.

7.1.2.3 For the sample selected for matrix spiking, add the matrix spiking solution described in Sec. 5.0 of Method 5000, either manually, or automatically, following the manufacturer's instructions.

7.1.2.4 Purge the sample with helium or another inert gas at a flow rate of up to 40 mL/minute (the flow rate may vary from 20 to 40 mL/min, depending on the target analyte group) for 11 minutes while the sample is being agitated with the magnetic stirring bar or other mechanical means. The purged analytes are allowed to flow out of the vial through a glass-lined transfer line to a trap packed with suitable sorbent materials.

7.1.3 Sample Desorption

7.1.3.1 Non-cryogenic interface - After the 11 minute purge, place the

purge-and-trap system in the desorb mode and preheat the trap to 245°C without a flow of desorption gas. Start the flow of desorption gas at 10 mL/minute for about four minutes. Begin the temperature program of the gas chromatograph and start data acquisition.

7.1.4 Trap Reconditioning

After desorbing the sample for 4 minutes, recondition the trap by returning the purge-and-trap system to the purge mode. Maintain the trap temperature at 245°C (or other temperature recommended by the manufacturer of the trap packing materials). After approximately 10 minutes, turn off the trap heater and halt the purge flow through the trap. When the trap is cool, the next sample can be analyzed.

7.2 High concentration method for soil samples with concentrations generally greater than 200 µg/kg.

The high concentration method for soil is based on a solvent extraction. A solid sample is either extracted or diluted, depending on sample solubility in a water-miscible solvent. An aliquot of the extract is added to organic-free reagent water containing surrogates and, if applicable, internal and matrix spiking standards, purged according to Method 5030, and analyzed by an appropriate determinative method. Wastes that are insoluble in methanol (i.e., petroleum and coke wastes) are diluted with hexadecane (see Sec. 7.2.8).
The specific sample preparation steps depend on whether or not the sample was preserved in the field. Samples that were not preserved in the field are prepared using the steps below, beginning at Sec. 7.2.1. If solvent preservation was employed in the field, then the preparation begins with Sec. 7.2.4.

7.2.1 When the high concentration sample is not preserved in the field, the sample consists of the entire contents of the sample container. Do not discard any supernatant liquids. Whenever practical, mix the contents of the sample container by shaking or other mechanical means without opening the vial. When shaking is not practical, quickly mix the contents of the vial with a narrow metal spatula and immediately reseal the vial.

7.2.2 If the sample is from an unknown source, perform a solubility test before proceeding. Remove several grams of material from the sample container. Quickly reseal the container to minimize the loss of volatiles. Weigh 1-g aliquots of the sample into several test tubes or other suitable containers. Add 10 mL of methanol to the first tube, 10 mL of PEG to the second, and 10 mL of hexadecane to the third. Swirl the sample and determine if it is soluble in the solvent. Once the

solubility has been evaluated, discard these test solutions. If the sample is soluble in either methanol or PEG, proceed with Sec. 7.2.3. If the sample is only soluble in hexadecane, proceed with Sec. 7.2.8.

7.2.3 For soil and solid waste samples that are soluble in methanol, add 9.0 mL of methanol and 1.0 mL of the surrogate spiking solution to a tared 20-mL vial. Using a top-loading balance, weigh 5 g (wet weight) of sample into the vial. Quickly cap the vial and reweigh the vial. Record the weight to 0.1 g. Shake the vial for 2 min. If the sample was not soluble in methanol, but was soluble in PEG, employ the same procedure described above, but use 9.0 mL of PEG in place of the methanol. Proceed with Sec. 7.2.5.

NOTE: The steps in Secs. 7.2.1, 7.2.2, and 7.2.3 must be performed rapidly and without interruption to avoid loss of volatile organics. These steps must be performed in a laboratory free from solvent fumes.

7.2.4 For soil and solid waste samples that were collected in methanol (see Sec. 6.2.2), weigh the vial to 0.1 g as a check on the weight recorded in the field, add the surrogate spiking solution to the vial by injecting it through the septum, shake for 2 min, as described above, and proceed with Sec. 7.2.5.

7.2.5 Pipet approximately 1 mL of the extract from either Sec. 7.2.3 or 7.2.4 into a GC vial for storage, using a disposable pipet, and seal the vial. The remainder of the extract may be discarded. Add approximately 1 mL of methanol or PEG to a separate GC vial for use as the method blank for each set of samples extracted with the same solvent.

7.2.6 The extracts must be stored at 4°C ± 2°C in the dark, prior to analysis. Add an appropriate aliquot of the extract to 5.0 mL of organic-free reagent water and analyze by Method 5030 in conjunction with the appropriate determinative method. Proceed to Sec. 7.0 in Method 5030 and follow the procedure for purging high concentration samples.

7.2.7 If results are to be reported on a dry weight basis, determine the dry weight of a separate aliquot of the sample, using the procedure in Sec. 7.4, after the sample extract has been transferred to a GC vial and the vial sealed.

7.2.8 For solids that are not soluble in methanol (including those samples consisting primarily of petroleum or coking waste) dilute or extract the sample with hexadecane using the procedures in Sec. 7.0 of Method 3585.

7.3 High concentration method for oily waste samples

This procedure for the analysis of oily waste samples involves the dilution of the sample in methanol or PEG. However, care must be taken to avoid introducing any of the floating oil layer into the instrument. A portion of the diluted sample is then added to 5.0 mL of organic-free reagent water, purged according to Method 5030, and analyzed using an appropriate determinative method.

For oily samples that are not soluble in methanol (including those samples consisting primarily of petroleum or coking waste), dilute or extract with hexadecane using the procedures in Sec. 7.0 of Method 3585.

The specific sample preparation steps depend on whether or not the sample was preserved in the field. Samples that were not preserved in the field are prepared using the steps below, beginning at Sec. 7.3.1. If methanol preservation was employed in the field, then the preparation begins with Sec. 7.3.3.

7.3.1 If the waste was not preserved in the field and it is soluble in methanol or PEG, weigh 1 g (wet weight) of the sample into a tared 10-mL volumetric flask, a tared scintillation vial, or a tared culture tube. If a vial or tube is used instead of a volumetric flask, it must be calibrated prior to use. This operation must be performed prior to opening the sample vial and weighing out the aliquot for analysis.

7.3.1.1 To calibrate the vessel, pipet 10.0 mL of methanol or PEG into the vial or tube and mark the bottom of the meniscus.

7.3.1.2 Discard this solvent, and proceed with weighing out the 1-g sample aliquot.

7.3.2 Quickly add 1.0 mL of surrogate spiking solution to the flask, vial, or tube, and dilute to 10.0 mL with the appropriate solvent (methanol or PEG). Swirl the vial to mix the contents and then shake vigorously for 2 minutes.

7.3.3 If the sample was collected in the field in a vial containing methanol or PEG, weigh the vial to 0.1 g as a check on the weight recorded in the field, add the surrogate spiking solution to the vial by injecting it through the septum. Swirl the vial to mix the contents and then shake vigorously for 2 minutes and proceed with Sec. 7.3.4.

7.3.4 Regardless of how the sample was collected, the target analytes are extracted

into the solvent along with the majority of the oily waste (i.e., some of the oil may still be floating on the surface). If oil is floating on the surface, transfer 1 to 2 mL of the extract to a clean GC vial using a Pasteur pipet. Ensure that no oil is transferred to the vial.

7.3.5 Add 10 - 50 μL of the methanol extract to 5 mL of organic-free reagent water for purge-and-trap analysis, using Method 5030.

7.3.6 Prepare a matrix spike sample by adding 10 - 50 μL of the matrix spike standard dissolved in methanol to a 1-g aliquot of the oily waste. Shake the vial to disperse the matrix spike solution throughout the oil. Then add 10 mL of extraction solvent and proceed with the extraction and analysis, as described in Secs. 7.4.2 - 7.4.5. If the recovery is not within the acceptance limits for the application, use the hexadecane dilution technique in Sec. 7.0 of Method 3585.

7.4 Determination of % Dry Weight

If results are to be reported on a dry weight basis, it is necessary to determine the dry weight of the sample.

NOTE: It is highly recommended that the dry weight determination only be made after the analyst has determined that no sample aliquots will be taken from the 60-mL vial for high concentration analysis. This is to minimize loss of volatiles and to avoid sample contamination from the laboratory atmosphere. There is no holding time associated with the dry weight determination. Thus, this determination can be made any time prior to reporting the sample results, as long as the vial containing the additional sample has remained sealed and properly stored.

8.0 QUALITY CONTROL AND ACCEPTANCE CRITERIA

8.1 Before processing any samples, the analyst should demonstrate through the analysis of an organic-free reagent water method blank that all glassware and reagents are interference free. Each time a set of samples is extracted, or there is a change in reagents, a method blank should be processed as a safeguard against chronic laboratory contamination. The blank samples should be carried through all stages of the sample preparation and measurement.

8.2 Initial Demonstration of Proficiency - Each laboratory must demonstrate initial proficiency with each sample preparation and determinative method combination it utilizes, by generating data of acceptable accuracy and precision for target analytes in a clean matrix. The laboratory must also repeat this demonstration whenever new staff are trained or significant changes in instrumentation are made.

TITLE: **CLOSED-SYSTEM PURGE-AND-TRAP AND EXTRACTION FOR VOLATILE ORGANICS IN SOIL AND WASTE SAMPLES USING SW846 METHOD 5035**

8.3 Sample Quality Control for Preparation and Analysis - See the appropriate analytical method to follow to demonstrate acceptable continuing performance on each set of samples to be analyzed. These include the method blank, either a matrix spike/matrix spike duplicate or a matrix spike and duplicate sample analysis, a laboratory control sample (LCS), and the addition of surrogates to each sample and QC sample.

9.0 METHOD PERFORMANCE

Refer to appropriate analytical method.

10.0 APPLICABLE DOCUMENTS/REFERENCES

"Test Methods for the Evaluation of Solid Waste: Physical/Chemical Methods," Method 5035, SW-846, USEPA, Revision III, June, 1997.

Archon Operator's Manual

LIST OF TABLES AND FIGURES

Table 1 Summary of Method Modifications

TITLE: **CLOSED-SYSTEM PURGE-AND-TRAP AND EXTRACTION FOR VOLATILE ORGANICS IN SOIL AND WASTE SAMPLES USING SW846 METHOD 5035**

TABLE 1

SUMMARY OF METHOD MODIFICATIONS

TOPIC	KATAHDIN SOP CA-214	METHOD 5035
Apparatus/Materials		
Reagents		
Sample preservation/ handling		
Procedures		

KATAHDIN ANALYTICAL SERVICES, INC.
STANDARD OPERATING PROCEDURE

SOP Number: CA-739
Revision History
Cover Page
Page 1

TITLE: ALKALINITY - METTLER DL25 AUTOTITRATOR, EPA 310.1

Prepared By: Betsy A Carbone Date: April 24, 1998

Approved By:

Group Supervisor: Betsy A Carbone Date: April 24, 1998

Operations Manager: JL C. Burton Date: 4/24/98

QA Officer: Deborah J. Nadeau Date: 4·24·98

General Manager: JCBurton for D. McGrath Date: 4/24/98

Revision History:

Revision	Changes	Authorization	Date

TITLE: **ALKALINITY - METTLER DL25 AUTO-TITRATOR, EPA 310.1**

Please acknowledge receipt of this standard operating procedure by signing and dating both of the spaces provided. Return the bottom half of this sheet to the QA Department.

I acknowledge receipt of copy ___ of document **SOP CA-739-00**, titled **ALKALINITY - METTLER DL25 AUTOTITRATOR, EPA 310.1**

Recipient: _____ Date: _____

KATAHDIN ANALYTICAL SERVICES, INC.
STANDARD OPERATING PROCEDURE

I acknowledge receipt of copy ___ of document **SOP CA-739-00**, titled **ALKALINITY - METTLER DL25 AUTOTITRATOR, EPA 310.1**

Recipient: _____ Date: _____

TITLE: **ALKALINITY - METTLER DL25 AUTO-TITRATOR, EPA 310.1**

1.0 SCOPE AND APPLICATION

The purpose of this SOP is to describe the procedure used by Katahdin Analytical Services, Inc., to determine the alkalinity (the acid-neutralizing capacity) of an aqueous sample using a Mettler DL25 Autotitrator in accordance with EPA Method 310.1/Standard Methods 2320B.

1.1 Definitions

1.2 Responsibilities

This method is restricted to use by, or under the supervision of analysts experienced in the analysis of alkalinity by EPA Method 310.1/Standard Methods 2320B. Each analyst must demonstrate and document their ability to generate acceptable results with this method. Refer to Katahdin SOP QA-805, current revision, "Personnel Training".

It is the responsibility of all Katahdin technical personnel involved in analysis of alkalinity by EPA Method 310.1/Standard Methods 2320B to read and understand this SOP, adhere to the procedures outlined, and to properly document their data in the appropriate lab notebook. Any deviations from the test or irregularities with the samples should also be recorded in the lab notebook and reported to the group supervisor or designated qualified data reviewer responsible for this data.

It is the responsibility of the Group Supervisor to oversee that members of their group follow this SOP, that their work is properly documented and to indicate periodic review of the associated logbooks.

1.3 Safety

Users of this procedure must be cognizant of inherent laboratory hazards, proper disposal procedures for contaminated materials and appropriate segregation of hazardous wastes. The toxicity or carcinogenicity of each reagent used in this method has not been precisely defined; however, each chemical should be treated as a potential health hazard. A reference file of material safety data sheets is available to all personnel involved in the chemical analysis. Everyone involved with the procedure must be familiar with the MSDSs for all the materials used in this procedure.

Each qualified analyst or technician must be familiar with Katahdin Analytical safety procedures and the Katahdin Chemical Hygiene Plan and follow appropriate procedures such as wearing safety glasses and gloves when working with chemicals or near an instrument. Food or drink are not allowed in the laboratory. Each analyst should know the location and use of all safety equipment.

1.4 Waste Disposal

Wastes generated during the preparation of samples must be disposed of in accordance with the procedures described in the current revision of the Katahdin Chemical Hygiene Plan and Safety Manual.

2.0 SUMMARY OF METHOD

A measured volume of unaltered sample (i.e., an aliquot which has not been filtered, diluted, concentrated, or otherwise altered) is titrated to two electrometrically determined end points of pH 4.5 and 8.2. The alkalinity of the sample as mg/L $CaCO_3$ is determined by calculation using the normality of the titrant and the volume required to titrate the sample volume to pH 4.5 and 8.2.

3.0 INTERFERENCES

Substances such as salts of weak organic and inorganic acids present in large amounts in the sample may interfere with the electrometric measurement. Soaps, oily matter, suspended solids, or precipitates may coat the glass electrode and cause a sluggish response. In this case, allow additional time between titrant additions to let the electrode come to equilibrium or clean the electrode occasionally.

Although the alkalinity of many surface waters is primarily a function of carbonate, bicarbonate, and hydroxyl ion content, the presence of borates, phosphates, silicates, or other bases may also contribute to the measured alkalinity of a sample.

4.0 APPARATUS AND MATERIALS

4.1 Mettler DL25 Autotitrator
4.2 ST20 Autosampler
4.3 pH Electrode
4.4 Sample cups
4.5 Analytical Balance capable of weighing to 0.0000g

TITLE: **ALKALINITY - METTLER DL25 AUTO-TITRATOR, EPA 310.1**

5.0 REAGENTS

5.1 0.1 N H_2SO_4- Dilute 3.0 mL of concentrated H_2SO_4 to one liter with ASTM Type II water. Standardize versus 25 mL of a 0.05N Na_2CO_3 solution by titrating potentiometrically.

5.2 H_2SO_4, 0.02N, Titrant -Prepare in accordance with EPA Method 310.1 by diluting 200.0 mL of the 0.1 N sulfuric acid to 1 L with ASTM Type II water (lab reagent water). Standardize by potentiometric titration of 15.0 mL 0.05 N Na_2CO_3 solution. Prepared titrants must be standardized initially prior to use and restandardized at least quarterly. Purchased titrants must be restandardized at least quarterly.

5.3 $NaCO_3$ Solution, 2.5 g/L - Prepare by drying 3-5 g Na_2CO_3 at 250°C for four hours. Cool, weigh 2.5000g ± 0.2000g and dilute to 1.0 liter with Type II water.

5.4 pH Buffers - 4.0, 7.0, 10

5.5 Laboratory Control Sample (LCS) Mid and High Level - Prepare by diluting 5.0 mL of 25,000 mg/L as $CaCO_3$ HACH Check Standard to one liter with Type II water. Final concentration is equivalent to 125 mg/L.

5.6 Matrix Spike Solution, Mid and High Level - Prepare by diluting 5.0 mL of 25,000 mg/L as $CaCO_3$ HACH Check Standard to 100 mL with Type II water. Final concentration is equivalent to 1250 mg/L.

5.7 LCS and Matrix Spike Solution, Low Level - Prepare by diluting 10.0 mL of 125 mg/L LCS solution (5.3) to 100 mL with ASTM Type II water. Final concentration is 12.5 mg/L.

6.0 SAMPLE COLLECTION, PRESERVATION AND HANDLING

Sample analysis must be performed within 14 days from sample collection. Samples must be refrigerated to 4°C upon collection and stored at 4°C until analysis.

7.0 PROCEDURES

INTRODUCTION

7.1 Pre-program the autotitrator to run alkalinity (EPA 310.1) as "Method #1". Use approximately 0.02N H_2SO_4 standardized with 2.5 g/L $NaCO_3$ solution as the titrant. The H_2SO_4 titrant has its own auto-burette and reservoir.

7.2 Titrate in 0.10 mL increments to two (2) pre-selected endpoints: 8.2 ("p value" or "phenophthalein alkalinity") and 4.5 ("m value" or "total alkalinity"). Use a pH electrode to detect the endpoints. Calibrate the pH electrode with pH 4.0 and pH 7.0 buffer solutions prior to use.

7.3 The autosampler has a capacity for twenty (20) samples. Sample runs are pre-programmed in a "series input" mode which assigns a unique sample #, sample identification and sample weight ("1" for alkalinity determinations) to each sample.

7.4 Data printout is automatic for each sample as it is run. Following each analytical run, a sample summary sheet is printed by entering "2-MODE". All three pieces of the hard data are collated into s single packet.

SYSTEM START-UP

7.5 Turn on the printer and autosampler. (The titrator console is always left on.)

7.6 Remove the glass pH electrode with attached cable from its protective tubing (which contains KCl - HCl) solution) and connect the cable to the back of the titrator console. Insert the electrode through the titrator autosampler arm. Place a sample cup containing KCl - HCl solution in position #1 and raise to cover both the glass electrode and the reference electrode lead with solution. See turntable mode commands: 7,8,9.

7.7 Clear all series inputs by entering: 9-SERIES INPUT. The system will beep to verify. Select method #1 by entering: 1-METHOD.

CALIBRATION OF pH ELECTRODE

7.8 Place approximately 50 mL of pH 4.0 and pH 7.0 buffer solution into two (2) sample cups in positions 2 and 3 of the turntable. Place an empty sample cup in positions 1 and 4 and a sample cup containing approximately 50 mL of pH 10 buffer solution in position 5.

7.9 Position the turntable so that cup #1 is under the burette inlet and raise the cup to the titration head. Rinse probe by entering 7-MODE 1 .

7.10 Enter: pH CALIB, 4 pH CALIB, 7 pH CALIB.

7.11 At blinking "Buffer A", enter RUN.

7.12 At blinking "Buffer B", enter RUN.

TITLE: **ALKALINITY - METTLER DL25 AUTO-TITRATOR, EPA 310.1**

7.13 The pH electrode parameters are automatically calculated, stored and printed out as:

"pH pH _____"; and "slope mV/pH _____".

7.14 Advance cup 4 (RO water) to titration head and rinse probe by entering: 7 - MODE - 1 . NOTE: Make sure cup is secured to titration head, i.e. in the "up" position.

7.15 Advance turntable to cup 5 (pH 10 buffer solution) and raise the cup to the titration head. Enter 3 - pH CALIB to determine the pH of the pH 10 buffer. Record the reading onto the print-out after equilibration. The acceptance range for pH 10 buffer is 9.950 -10.050.

PERFORMING SERIES TITRATIONS

7.16 Call up alkalinity method: 1 - METHOD.

7.17 Clear series input: 9 - SERIES INPUT.

7.18 Enter titrant, concentration determined by manual standardization of 0.02 N H_2SO_4 against $NaCO_3$ (approximately 2.5000g) in triplicate.

7.19 Check burette chamber for air bubbles. To remove bubbles or flush burette, enter: BURETTE/mL. This will cause the burette to empty and then refill with titrant. Be sure that there is a sample cup in the "up" position at the titration head to collect the titrant dispensed.

7.20 Place labeled sample cups in turntable in desired order.

7.21 Position turntable to position 20 with an empty cup in the "up" position.

7.22 To enter sample data, press: SERIES INPUT.

7.23 The sample number will blink briefly. Check to see that it matches the turntable position of the sample and press: RUN.

7.24 When "WEIGHT" blinks, press: 1 - RUN unless "1" has already been entered and displayed. In this case, just press: RUN.

7.25 When "INDENT" blinks, enter numerical identification of the sample (i.e. WJ0450-2 would be entered as "450-2") and press: RUN.

7.26 Continue until all samples have been entered. A hardcopy printout will be generated simultaneously. When finished, press: RESET to save the protocol.

7.27 Print confirmation of protocol by pressing: 2 - SERIES INPUT.

7.28 Print confirmation of method parameters by pressing: 2 - MODE.

7.29 Start series titration by pressing: SERIES RUN. NOTE: An empty wash cup must be placed temporarily in position 20 (up position) to accommodate the initial probe wash sequence.

7.30 Series titration is automatic from this point and may be paused/stopped by pressing RESET at any time.

7.31 Print a final titration summary sheet by entering: 2 - SERIES INPUT.

8.0 QUALITY CONTROL AND ACCEPTANCE CRITERIA

Refer to Table 1 for a summary of QC requirements, acceptance criteria and corrective action.

8.1 One method blank consisting of 100 mL ASTM Type II water must be analyzed daily or per twenty samples, whichever is more frequent.

Acceptance criteria:	Mid, High Level	< 20 mg/L as $CaCO_3$
	Low Level	< 5.0 mg/L as $CaCO_3$

Corrective Actions: Restandardize titrant and reanalyze associated samples and QC.
Report results which are <PQL.
Report results which are >10X the blank level with a "B" flag

8.2 For mid/high level, one laboratory control sample (LCS) at 125 mg/L as $CaCO_3$ must be analyzed for every twenty samples or each day that the analysis is performed, whichever is more frequent.

For low level, analyze one LCS at 12.5 mg/L as $CaCO_3$ for every twenty samples or each day that the analysis is performed, whichever is more frequent.

Acceptance Criteria: 87 - 119% of true value (statistically derived from lab data).
Corrective Actions: Restandardization of titrant and reanalysis of all samples are required.
If LCS fails high, report results which are <PQL.

8.3 One sample duplicate is analyzed for every twenty samples or each day's batch, whichever is more frequent.

Acceptance Criteria:

0-20% RPD for concentrations > 60 mg/L for mid level and >15 mg/L for low level

0-100% RPD for concentrations < 60 mg/L for mid level and <15 mg/L for low level

Corrective Action: Reanalyze sample in duplicate for confirmation. If still out and no lab problem is suspected, flag sample result with appropriate notation (e.g., sample non-homogeneity).

8.4 One mid/high level Matrix Spike is analyzed for every ten samples or each day's batch of mid/high level samples, whichever is more frequent. One low level Matrix Spike is analyzed for every ten samples or each day's batch of low level samples, whichever is more frequent. The matrix spike is prepared by volumetrically pipetting 10 mL of the appropriate spike solution into 50 mL of sample.

Acceptance Criteria: 75-125% Recovery of the matrix spike. Recovery is calculated using the following equation:

$$\text{Recovery (\%)} = \frac{[(\text{Sample} + \text{Spike}) - (\text{Sample})]\ \text{mg/L Alk. as } CaCO_3}{(\text{Spike concentration})\ \text{mg/L as } CaCO_3} \times 100$$

Corrective Action: Reanalyze matrix spike for confirmation. If still out and no lab problem is suspected, flag raw data with appropriate notation (e.g., footnote I-1).

9.0 METHOD PERFORMANCE

Refer to Method 310.1 for typical method performance data.

10.0 APPLICABLE DOCUMENTS/REFERENCES

"Methods for Chemical Analysis of Water and Wastes," EPA-600/4-79-020, Revised March 1983, Method 310.1.

"Standard Methods for the Examination of Water and Wastewater," Method 2320B, 18th Edition, 1992, American Public Health Association.

TITLE: **ALKALINITY - METTLER DL25 AUTO-TITRATOR, EPA 310.1**

LIST OF TABLES AND FIGURES

Table 1 QC Requirements
Table 2 Summary of Method Modifications
Table 4 Summary of Often Used Commands
Figure 1 Example of Alkalinity Run Sequence

TITLE: **ALKALINITY - METTLER DL25 AUTO-TITRATOR, EPA 310.1**

TABLE 1

QC REQUIREMENTS

Parameter/ Method	QC Check	Minimum Frequency	Acceptance Criteria	Corrective Action
Alkalinity EPA 310.1 SM2320B Autotitrator	Method blank	One per prep batch of 20 or fewer samples	No analyte detected >PQL	(1) Investigate source of contamination (2) Report all sample results <PQL. (3) Report sample results >10X the blank result and flag results with a "B". (4) Reanalyze all other samples associated with the failing blank.
	LCS	One per prep batch of 20 or fewer samples	87 - 119% recovery; (statistically derived)	(1) If the LCS fails high, report samples which are <PQL. (2) Recalibrate and/or reanalyze other samples.
	Matrix Spike	One MS per 10 field samples	75-125 %R	(1) Reanalyze (2) If matrix interference confirmed, flag sample result in raw data
	Sample Duplicate	One sample duplicate per 20 field samples	RPD ≤20 for results > 3X the PQL; RPD ≤ 100 for results < 3X PQL	(1) Reanalyze (2) If matrix interference (eg., non-homogeneity) confirmed, flag sample result with appropriate footnote
	MDL study	Once per year	MDL< the given PQLs	Repeat MDL

TITLE: **ALKALINITY - METTLER DL25 AUTO-TITRATOR, EPA 310.1**

TABLE 2
SUMMARY OF METHOD MODIFICATIONS

TOPIC	KATAHDIN SOP CA-739-00	METHOD 310.1/SM 2320B
Apparatus/Materials		
Reagents		
Sample preservation/ handling		
Procedures		
QC - Spikes		
QC - LCS		
QC - Accuracy/Precision		
QC - MDL		

TABLE 4

SUMMARY OF OFTEN USED COMMANDS

COMMAND	ACTION
1 - MODE	Enter changes to Method Parameters
2 - MODE	Print Method Parameters
METHOD	Display Active Method
n - METHOD	Call up Method # n
pH CALIB	pH Probe Calibration Sequence
4 pH CALIB	pH Probe Calibration Sequence
7 pH CALIB	pH Probe Calibration Sequence
3 - pH CALIB	Display pH of Active Sample
Burette/mL	Dispense Burette Contents and Refill
SERIES INPUT	Enter Series Sample
2 -SERIES INPUT	Print Series Data
9 - SERIES INPUT	Clear Series Data
7 MODE	Turntable Commands Active
7 MODE - 1	Rise Mode - Active as long as "1" is pressed
7 MODE - 7	Move cup up or down
7 MODE - 8	Rotate Forwards 1 Position
7 MODE - 9	Rotate Backwards 1 Position

TITLE: **ALKALINITY - METTLER DL25 AUTO-TITRATOR, EPA 310.1**

FIGURE 1

EXAMPLE OF ALKALINITY RUN SEQUENCE

========== METTLER DL25 Titrator date 04-13-98 ==========

LAT 041398 Conc = 0.0198N

SERIES INPUT
METHOD 1

SAMPLE NO	RESULT	IDENT	WEIGHT
1	2.0601	0	1.0000 <5.0
2	125.90	125.1	1.0000 101%
3	345.94	830.4	1.0000
4	12.003	841.1	1.0000
5	10.362	841.2	1.0000
6	7.2462	841.3	1.0000
7	2.0447	841.4	1.0000
8	88.124	841.5	1.0000
9	310.87	853.1	1.0000
10	77.950	853.2	1.0000
11	41.846	853.3	1.0000
12	166.10	853.3 SPK	1.0000 [166.10 - 41.846(75/50)] /125] 100 = 103%
13	125.14	125.2	1.0000 100%
14	1.3840	0	1.0000 <5.0
15	40.644	869.1	1.0000
16	10.297	869.2	1.0000
17	45.675	869.3	1.0000
18	520.21	869.4	1.0000
19	75.957	869.5	1.0000
20	108.37	869.6	1.0000
21	653.47	869.7	1.0000
22	532.52	869.8	1.0000
23	75.402	869.9	1.0000
24	76.785	869.9 DUP	1.0000 x̄ = 76.0935 RPD% = 1.8
25	190.64	869.9 SPK	1.0000 [(190.64 - 75.402(75/50)) /125] 100 = 98%
26	123.31	125.3	1.0000 99%
27	1.5156	0	1.0000 <5.0

BAC 4/13/98

KATAHDIN ANALYTICAL SERVICES, INC.
STANDARD OPERATING PROCEDURE

SOP Number: CA-702
Revision History
Cover Page
Page 1

TITLE: **ANALYSIS OF TOC, DOC, AND TIC IN AQUEOUS SAMPLES USING THE DOHRMAN CARBON ANALYZER**

Prepared By: Betsy A Gibbons Date: 10/15/97

Approved By:

Group Supervisor: Betsy A Gibbons Date: 10/15/97

Operations Manager: John C. Burton Date: 10/15/97

QA Officer: W E Harris Date: 10.15.97

General Manager: Dennis P. Hughes Date: 10/15/97

Revision History:

Revision	Changes	Authorization	Date

TITLE: **ANALYSIS OF TOC, DOC, AND TIC IN AQUEOUS SAMPLES USING THE DOHRMAN CARBON ANALYZER**

Please acknowledge receipt of this standard operating procedure by signing and dating both of the spaces provided. Return the bottom half of this sheet to the QA Department.

I acknowledge receipt of copy ____ of document **SOP CA-702-00**, titled **ANALYSIS OF TOC, DOC, AND TIC IN AQUEOUS SAMPLES USING THE DOHRMAN CARBON ANALYZER**.

Recipient: _____ Date: _____

KATAHDIN ANALYTICAL SERVICES, INC.
STANDARD OPERATING PROCEDURE

I acknowledge receipt of copy ____ of document **SOP CA-702-00**, titled **ANALYSIS OF TOC, DOC, AND TIC IN AQUEOUS SAMPLES USING THE DOHRMAN CARBON ANALYZER**.

Recipient: _____ Date: _____

TITLE: **ANALYSIS OF TOC, DOC, AND TIC IN AQUEOUS SAMPLES USING THE DOHRMAN CARBON ANALYZER**

1.0 SCOPE AND APPLICATION

The purpose of this SOP is to describe the procedures used by Katahdin Analytical Services, Inc. technical personnel for analyzing total organic carbon (TOC), dissolved organic carbon (DOC), and total inorganic carbon (TIC) in aqueous samples using the Dohrman Carbon Analyzer.

This procedure applies to drinking and surface waters, domestic and industrial waste water. The Practical Quantitation Level (PQL) is 1 mg/L.

1.1 Definitions

Total Organic Carbon (TOC) - Organic carbon analyzed from an unfiltered sample.

Dissolved Organic Carbon (DOC) - Organic carbon analyzed from a filtered sample.

Total Inorganic Carbon (TIC) - Carbonate species which are dissociable by acidic sparging with an inert carrier gas.

1.2 Responsibilities

This method is restricted to use by, or under the supervision of, analysts experienced in the preparation and analysis of samples for TOC, DOC, and TIC using EPA Methods 415.1. Each analyst must demonstrate his/her ability to generate acceptable results with this method. Refer to Katahdin SOP QA-805, current revision, "Laboratory Technical Personnel Training."

It is the responsibility of all Katahdin technical personnel involved in the determination of TOC, DOC, TIC to read and understand this SOP, adhere to the procedures outlined, and to properly document their data in the appropriate lab notebook. Any deviations from the test or irregularities with the samples should also be recorded in the lab notebook and reported to the Supervisor or designated qualified data reviewer responsible for this data..

It is the responsibility of the Supervisor to oversee that members of his/her group follow this SOP, that their work is properly documented and to indicate periodic review of the associated logbooks.

1.3 Safety

Users of this procedure must be cognizant of inherent laboratory hazards, proper disposal procedures for contaminated materials and appropriate segregation of hazardous wastes. The toxicity or carcinogenicity of each reagent used in this method has not been precisely defined; however, each chemical should be treated as a potential health hazard. A reference file of material safety data sheets is available to all personnel involved in the chemical analysis.

Everyone involved with the procedure must be familiar with the MSDSs for all the materials used in this procedure.

Each qualified analyst or technician must be familiar with the Katahdin Chemical Hygiene Plan and Safety Manual and follow appropriate procedures such as: wearing safety glasses and gloves when working with chemicals or near an instrument; not taking food or drink into the laboratory; each analyst should know the location of a respirator and be trained on how to use it properly and should know the location and use of all safety equipment.

1.4 Waste Disposal

Waste generated during the preparation and analysis of samples must be discarded appropriately: 1) empty high salt reagent waste into a designated Acid/Metal waste drum; 2) normal reagent waste may be poured down a laboratory drain equipped with a dilution/neutralization trap, in accordance with the laboratory's NPDES permit and the procedures described in the Katahdin Chemical Hygiene Plan and Safety Manual.

2.0 SUMMARY OF METHOD

Organic carbon in a sample is converted to carbon dioxide (CO_2) by wet chemical oxidation with potassium persulfate solution. The CO_2 formed is then measured directly by an infrared detector. The amount of CO_2 in a sample is directly proportional to the concentration of carbonaceous material in the sample.

3.0 INTERFERENCES

4.0 APPARATUS AND MATERIALS

4.1 Dohrman Carbon Analyzer Model DC-80
4.2 Dohrman carousel autosampler
4.3 Glass autosampler tubes - 18 x 150 mm
4.4 Class A volumetric flasks and pipets (100 mL and 200 mL)
4.5 Pipets (0.5, 2.0 and 5.0 mL)
4.6 Oxygen gas

5.0 REAGENTS

TITLE: **ANALYSIS OF TOC, DOC, AND TIC IN AQUEOUS SAMPLES USING THE DOHRMAN CARBON ANALYZER**

NOTE: All standards and reagents should be prepared monthly except where noted.

5.1 POTASSIUM PERSULFATE SOLUTION, 2%: Dissolve 20 g of reagent grade potassium persulfate in one liter of ASTM Type II water. Add one mL of concentrated reagent grade phosphoric acid and mix well. Store in an amber bottle in the refrigerator.

5.2 POTASSIUM PERSULFATE-MERCURIC SALT SOLUTION: This solution is used with samples containing high concentrations of chloride salts. Dissolve 8.2 g of mercuric chloride and 9.6 g of mercuric nitrate in 400 mL ASTM Type II water. Add 20 g of potassium persulfate and 5 mL of concentrated nitric acid. Dilute to one liter and mix well. Store in an amber bottle in the refrigerator.

ORGANIC CARBON STANDARDS: All standards should be primary standard grade.

5.4 Prepare a 2000 mg/L standard by weighing 0.4250g of potassium hydrogen phthalate dried to a constant weight at 120°C for 4 hours and dissolving in 100 mL of ASTM Type II water. Add 0.10 mL of concentrated phosphoric acid. Store in an amber bottle in the refrigerator.

5.5 Prepare a 400 mg/L standard by diluting 20.00 mL of the 2000 mg/L standard to 100 mL with ASTM Type II water. Store in an amber bottle in the refrigerator.

For curve preparation, all of the following standards should be prepared fresh daily:

5.6 Prepare a 10 mg/L standard by diluting a 0.50 mL of the 2000 mg/L standard to 100 mL of ASTM Type II water.

5.7 Prepare a 20 mg/L standard, for the curve and CCV, by diluting 2.0 mL of the 2000 mg/L standard to 200 mL using ASTM Type II water.

5.8 Prepare a 50 mg/L standard by diluting 2.5 mL of the 2000 mg/L standard to 100 mL using ASTM Type II water.

6.0 SAMPLE COLLECTION, PRESERVATION AND HANDLING

Collect samples in glass jars. Preserve with HCl or H_2SO_4 at time of collection and keep cool 4°C. Analyze within 28 days.

7.0 PROCEDURES

ANALYZER START-UP PROCEDURE

7.1 Turn the detector on by pressing the power button at least one half-hour before use. When using the autosampler, turn on the detector and the autosampler by pressing the two power buttons simultaneously.

7.2 Fill the reactor vessel with potassium persulfate solution (or potassium persulfate-mercuric salt solution if samples are expected to contain high concentrations of salts) by lifting the lamp assembly up and pouring the reagent into the reactor. Fill to about one inch below the recycle port. Please the reactor intake line into the bottle of reagent and the out take line into a 500 mL waste beaker.

7.3 Turn up the nitrogen gas flow to 40 psi.

7.4 Press the power button on the reaction module, then the pump button and then the lamp button in that order.

CALIBRATION

7.5 Switch the range selector to one (1) mL.

7.6 With the gray ring on the autosampler tray directly in front of you, load the 10 mg/L standard in the first position to the left of the gray ring. This is for internal calibration of the instrument.

7.7 Then load the calibration curve directly after the first tube in the following order: Blank (preserved with 10 drops of H_2SO_4), 10 mg/L, 20 mg/L, 50 mg/L, alkalinity check (preserved with 10 drops of H_2SO_4), LCS.

7.8 Line up the first 10 mg/L standard with the sample uptake tube on the autosampler.

7.9 Press the "auto" button on the autosampler. The mechanism holding the sample uptake tube and the two sparging tubes should descend into the sample tubes. If they do not, move the carousel a little in order to better align them.

7.10 Once sampling is done, the mechanism holding the uptake and sparging tubes will rise out of the samples. It is very important to immediately press the "manual" button on the autosampler. The start button on the detector will then light up while it reads the sample.

7.11 When the detector beeps and the ready light comes on, lift the cover over the calibration button and press it quickly. If the printout value is less than 9.950 or the instrument indicates an error due to high bias for the 10 mg/L standard, then recalibrate.

7.12 If calibration is acceptable, move the autosampler carousel over one position to the blank. Press the "auto" button and then start loading the rest of the batch.

SAMPLE ANALYSIS

7.13 The operating range for 1000 uL is 0.1-160 mg/L. Anything over 160 mg/L needs to be diluted and run again.

7.14 Analyze an independent check standard (LCS) before each run of samples and after every 20 samples. Recovery must be 80-120%. If not, recalibrate the instrument, and begin sample analysis sequence again.

7.15 Analyze one blank consisting of water and 7-10 drops of sulfuric acid before each run of samples. The concentration of TOC in the blank must be less than the PQL of 1.0 mg/L. If the blank is greater than 1.0 mg/L, start with a fresh blank cup and try again. If the blank is still out, recalibration will be necessary.

7.16 To check for purging efficiency, analyze an alkalinity check standard, acidified with 7-10 drops of sulfuric acid. The result must be less than 2.0 mg/L. If this is not the case, acidify a new alkalinity check standard and reanalyze. If the standard is still greater than 2.0 mg/L, recalibration may be necessary.

7.17 Each tube of sample will be sparged with oxygen to remove the inorganic carbon.

7.18 When the analysis is complete, the instrument will make a beeping noise and then display a value in the window plus print the value on the printer tape. Record this value in the logbook along with the volume of sample injected and the range that the instrument is set to read (1000 uL or 200 uL).

7.19 After the check standard, cup up 10 samples, one of which must be a matrix spike, followed by a CCV (the 20 mg/L standard) and a CCB. The next 10 samples must include a duplicate and spike followed by a CCV, CCB and an LCS. A spiked sample is prepared by adding 0.10 mL of 2000 mg/L standard to 20 mL of sample.

7.20 The autosampler continues automatically and only needs to be stopped after it has come out of the last sample tube. To stop the run, press the "manual" button.

SHUT-DOWN PROCEDURE

7.21 Press the lamp button on the reaction module, then the pump button, and then the power button in that order.

7.22 Press the main power buttons on the electronics module and autosampler if in use.

7.23 Turn the oxygen gas flow to OFF.

7.24 Remove the intake line from the bottle of potassium persulfate reagent.

7.25 Rinse all syringes and sample cups with ASTM Type II.

7.26 Discard the contents of the waste beaker appropriately (See Section 1.4).

MAINTENANCE

7.27 Change the pump tubes monthly or as needed.

7.28 Replace the tin and copper scrubbers when over half of either one is discolored.

TOTAL INORGANIC CARBON ANALYSIS

7.29 TIC is the carbon that is purged from the acidified sample as carbon dioxide before it is analyzed for TOC. To measure TIC, inject the unpurged sample to get a value for total carbon. Purge the sample and analyze it for the TOC value. The difference between the total carbon and the total organic carbon is total inorganic carbon.

8.0 QUALITY CONTROL AND ACCEPTANCE CRITERIA

8.1 A method blank and LCS samples must be analyzed and evaluated as described in sections 7.14 and 7.15. The concentration of TOC in the blank must be less than the PQL of 1.0 mg/L. LCS recovery must be 80-120%. If acceptance criteria are not met, the method blank, LCS and associated samples must be reanalyzed. If for any reason sample results are to be reported from an analytical run containing an unacceptable blank or LCS, a Corrective Action Report must be initiated immediately and the Project Manager, Group Supervisor, Operations Manager and QAO consulted.

8.2 A duplicate sample must be analyzed every twenty samples. For every duplicate sample tested find the mean (x) and calculate the relative percent difference (%RPD). The acceptance criteria for RPD is ≤ 20%. Duplicates not within ≤ 20% RPD should be notated in the raw data. If a laboratory problem is suspected the duplicates and all affected samples must be reanalyzed.

8.3 A spiked sample must be run every 10 samples. The acceptance criteria for matrix spike recovery is 75-125%. Any matrix spike recovery outside of the criteria must be notated on the raw data with an I-1 or I-2 notation. If a laboratory problem is suspected the matrix spike and all affected samples must be reanalyzed.

TITLE: **ANALYSIS OF TOC, DOC, AND TIC IN AQUEOUS SAMPLES USING THE DOHRMAN CARBON ANALYZER**

9.0 METHOD PERFORMANCE

10.0 APPLICABLE DOCUMENTS/REFERENCES

Dohrman Operations Manual, Edition 11, July 1986.

EPA Method 415.1 " Methods for Chemical Analysis of Water and Wastes," EPA 600/4-79-020, Revised March, 1983.

LIST OF TABLES AND FIGURES

Table 1 QC Requirements
Figure 1 Example of TOC Analytical Runlog Page
Figure 2 Example of TOC Instrument Print-out - Dohrman DC-80 Carbon Analyzer

TITLE: **ANALYSIS OF TOC, DOC, AND TIC IN AQUEOUS SAMPLES USING THE DOHRMAN CARBON ANALYZER**

TABLE 1

QC REQUIREMENTS

Analytical Method	Applicable Parameter	QC Check	Minimum Frequency	Acceptance Criteria	Corrective Action
EPA 415.2	TOC,DOC TIC	Method blank	One per prep batch	No analyte detected >PQL	(1) Investigate source of contamination (2) Reprep and analyze method blank and all samples processed with the contaminated blank
		LCS for all analytes	One LCS per prep batch	80-120%	Reprep and analyze all affected QC and field samples
		Matrix spike	One MS per ten samples	75-125% recovery of spike	(1) If LCS in criteria and matrix interference suspected, flag data (2) Else, reanalyze
		Sample Duplicate	One sample duplicate per twenty samples	RPD $\leq$ 20	(1) If lab QC in criteria and matrix interference suspected, flag data (2) Else, reanalyze
		MDL study	Once per year	MDL< the given PQLs	Repeat MDL

TITLE: **ANALYSIS OF TOC, DOC, AND TIC IN AQUEOUS SAMPLES USING THE DOHRMAN CARBON ANALYZER**

FIGURE 1

EXAMPLE OF TOC ANALYTICAL RUNLOG PAGE

KATAHDIN ANALYTICAL

LOGBOOK

PAGE

TOTAL ORGANIC CARBON

EPA: 415.1 PQL: 1.0 mg/L

REAGENTS:
TOC REAGENT:
TOC CHECK STANDARD:
ALKALINITY CHECK STANDARD:
10 ppm STANDARD:
400 ppm STANDARD:
BASELINE:

NOTES:

CLIENT	SAMPLE ID	SITE ID	RANGE ul	VOLUME ul	RUN #	TOC mg/L	REPORTED TOCmg/L

ANALYST: DATE: CONT ON PAGE
CHECKED BY: DATE:

TITLE: **ANALYSIS OF TOC, DOC, AND TIC IN AQUEOUS SAMPLES USING THE DOHRMAN CARBON ANALYZER**

FIGURE 2

EXAMPLE INSTRUMENT PRINTOUT
DOHRMAN DC-80 CARBON ANALYZER

```
SELFTEST
NO ERRORS

1   TOC   11.72

CAL -- 1 ML
CAL AVE 11.72
CAL ADJ 9.988

1   TOC   0.292

2   TOC   9.744

3   TOC   19.29

4   TOC   47.58

5   TOC   2.954

6   TOC   66.83

7   TOC   2.499

8   TOC   1.714

9   TOC   1.840

10   TOC   1.606

11   TOC   1.741

12   TOC   1.979

13   TOC   1.918

14   TOC   1.685

15   TOC   1.909

16   TOC   1.733

17   TOC   1.755
```

TITLE: TITRIMETRIC DETERMINATION OF SULFIDE USING EPA METHOD 376.1

Prepared By: _____ Date: _____

Approved By:

Group Supervisor: _____ Date: _____

Operations Manager: _____ Date: _____

QA Officer: _____ Date: _____

General Manager: _____ Date: _____

Revision History:

Revision	Changes	Authorization	Date

TITLE: **TITRIMETRIC DETERMINATION OF SULFIDE USING EPA METHOD 376.1**

Please acknowledge receipt of this standard operating procedure by signing and dating both of the spaces provided. Return the bottom half of this sheet to the QA Department.

I acknowledge receipt of copy ___ of document **SOP CA-722-00**, titled **TITRIMETRIC DETERMINATION OF SULFIDE USING EPA METHOD 376.1**.

Recipient: _____ Date: _____

KATAHDIN ANALYTICAL SERVICES, INC.
STANDARD OPERATING PROCEDURE

I acknowledge receipt of copy ___ of document **SOP CA-722-00**, titled **TITRIMETRIC DETERMINATION OF SULFIDE USING EPA METHOD 376.1**.

Recipient: _____ Date: _____

TITLE: **TITRIMETRIC DETERMINATION OF SULFIDE USING EPA METHOD 376.1**

1.0 SCOPE AND APPLICATION

The purpose of this SOP is to describe the procedure and requirements followed by Katahdin Analytical Services, Inc. for the titrimetric determination of sulfide. This method is applicable to the measurement of total and dissolved sulfides in drinking, surface and saline waters, and domestic and industrial wastes in accordance with EPA Method 376.1. Acid insoluble sulfides are not measured by the use of this test. (Copper sulfide is the only common sulfide in this class). This method is suitable for the measurement of sulfide in concentrations above a practical quantitation level of 1 mg/L.

1.1 Definitions

Supernatant - aqueous layer of a biphasic solution
Floc - particulate layer formed through precipitation of ZnS in a basic solution.

1.2 Responsibilities

This method is restricted to use by, or under the supervision of analysts experienced in the titrimetric analysis of sulfide by EPA Method 376.1. Each analyst must demonstrate and document their ability to generate acceptable results with this method. Refer to Katahdin SOP QA-805, current revision, "Personnel Training".

It is the responsibility of all Katahdin technical personnel involved in titrimetric analysis of sulfide by Method 376.1 to read and understand this SOP, adhere to the procedures outlined, and to properly document their data in the appropriate lab notebook. Any deviations from the test or irregularities with the samples should also be recorded in the lab notebook and reported to the group supervisor or designated qualified data reviewer responsible for this data.

It is the responsibility of the Group Supervisor to oversee that members of their group follow this SOP, that their work is properly documented and to indicate periodic review of the associated logbooks.

1.3 Safety

Users of this procedure must be cognizant of inherent laboratory hazards, proper disposal procedures for contaminated materials and appropriate segregation of hazardous wastes. The toxicity or carcinogenicity of each reagent used in this method has not been precisely defined; however, each chemical should be treated as a potential health hazard. A reference file of material safety data sheets is available to all personnel involved in the chemical analysis. Everyone involved with the procedure must be familiar with the MSDSs for all the materials used in this procedure.

Each qualified analyst or technician must be familiar with Katahdin Analytical safety procedures and the Katahdin Chemical Hygiene Plan and follow appropriate procedures such as: wearing safety glasses and gloves when working with chemicals or near an instrument; not taking food or drink into the laboratory; each analyst should possess a respirator and be trained on how to use it properly and should know the location and use of all safety equipment.

1.4 Waste Disposal

Samples and waste can be disposed of down the sink drain with running water.

2.0 SUMMARY OF METHOD

Excess iodine is added to samples that have been treated with zinc acetate to produce zinc sulfide. The iodine oxidizes the sulfide to sulfur under acidic conditions. The excess iodine is backtitrated with sodium thiosulfate.

3.0 INTERFERENCES

Reduced sulfur compounds such as sulfite, thiosulfite and hydrosulfite, which decompose in acid may yield erratic results. Also, volatile iodine consuming substances will give high results. Sulfide may be volatilized by aeration and any oxygen inadvertently added to the sample may convert the sulfide to an unmeasurable form.

4.0 APPARATUS AND MATERIALS

4.1 10 mL buret (Class A)
4.2 Stir plate
4.3 Buret stand and holder
4.4 Stir bar and retriever
4.5 250 mL Erlenmeyer flask
4.6 Volumetric pipets-10mL, 2 mL (Class A)
4.7 Disposable pasteur pipet
4.8 5 mL and 10 mL oxford pipet and tips
4.9 250 mL graduated cylinder (Class A)
4.10 40 mL plastic centrifuge tubes
4.11 Centrifuge
4.12 Glass fiber filters

5.0 REAGENTS

5.1 Hydrochloric acid, 6 N, 1+1 – In a fume hood (caution) slowly add 500 ml of concentrated HCL to 500 ml of DI water. Slowly mix and allow to cool.

5.2 Standard iodine (I_2) solution, 0.0250 N: Dissolve 20 to 25 g reagent grade potassium iodide (KI) in a little water in a one liter class A volumetric flask. Add 3.2 g reagent grade iodine, allow to dissolve and dilute to one liter. Standardize against 0.0375 N sodium thiosulfate as described in Sections 7.1-7.7. The solution is stable for six months from the date of the preparation.

5.3 Sodium thiosulfate ($Na_2S_2O_3$), 0.0375 N, available commercially.

5.4 Starch indicator, 0.5%, preserved with salicylic acid, available commercially.

5.5 Sodium sulfide(Na_2S) standard: Dissolve 3.75 g reagent grade sodium sulfide into 500 mL ASTM Type II water. Standardize against sodium thiosulfate as described in Sections 7.1-7.7. The sodium sulfide standard is stable for six months from the date of preparation. Store in amber glass container in the refrigerator.

5.6 Zinc acetate solution: Dissolve 5 g of reagent grade zinc acetate in 100 mL ASTM Type II water.

5.7 Sodium hydroxide, 10 N.

6.0 SAMPLE COLLECTION, PRESERVATION AND HANDLING

Samples must be taken with a minimum of aeration. The holding time for samples is seven days from the date of collection. Samples which are turbid or contain a lot of particulate matter will require pretreatment with zinc acetate. See Section 7.9.1 - 7.9.4. Preserve samples with NaOH to a pH of >9. Keep cool until analysis.

7.0 PROCEDURES

STANDARDIZATION OF IODINE AND SODIUM SULFIDE STANDARDS

7.1 Using a class A volumetric pipet, pipet 10.0 mL of the standard iodine solution into a 250 mL Erlenmeyer flask. Add 2 mL 6 N HCl and 200 mL ASTM Type II water.

7.2 Place Erlenmeyer flask on a stirplate; stir gently so as not to excessively aerate the sample. Titrate with sodium thiosulfate from a 10 mL buret with the tip submerged. Titrate until a straw color (pale yellow) develops.

TITLE: **TITRIMETRIC DETERMINATION OF SULFIDE USING EPA METHOD 376.1**

7.3 Add approximately 1 mL of starch indicator with a disposable pasteur pipet. The color will turn blue. Titrate with sodium thiosulfate until blue color disappears and the solution is clear and colorless. Record the total volume of sodium thiosulfate used to two decimal places.

7.4 Perform and record sodium thiosulfate volume used for each of three replicates.

7.5 To standardize the sodium sulfide standard, follow steps 7.1 through 7.3 above, but also add 2.0 mL of sodium sulfide standard with a volumetric pipet just before titrating with sodium thiosulfate.

7.6 Perform and record sodium thiosulfate volume used for each of three replicates.

77. Calculate iodine (I_2) normality and sodium sulfide(Na_2S) concentration in mg/mL as follows:

$$I_2(N) = \frac{(V_1)(0.0375)}{10\ mL}$$

where V_1 = mean volume (mL) of sodium thiosulfate from three replicate titrations performed to standardize iodine solution.

$$Na_2S(mg/mL) = \frac{\{(I_2(N))(10\ mL) - (0.0375)(V_2)\}(16)}{2\ mL}$$

where V_2 = mean volume (mL) of sodium thiosulfate from three replicate titrations performed to standardize sodium sulfide solution

Refer to Figure 2 for example calculations.

SAMPLE ANALYSIS

7.8 For samples NOT requiring pretreatment with zinc acetate:

Follow steps 7.1 through 7.3 except add 200 mL of sample instead of water. Note that the sample solution should be yellow. If yellow color does not persist, then add more of the iodine solution in 10 mL increments until the yellow color returns.

7.9 For samples which are turbid or contain a lot of particulate matter, pretreat with zinc acetate as follows:

1. Shake sample gently and transfer 200 mls to a 250 ml Erlenmeyer flask.

2. Adjust the pH of sample to 9 or greater with 10 N sodium hydroxide.

3. Add 5 mL of the zinc acetate solution to the sample and mix well.

TITLE: **TITRIMETRIC DETERMINATION OF SULFIDE USING EPA METHOD 376.1**

4. Mix sample by inverting flask. A white precipitate should form. Allow the sample to settle out for at least 30 minutes.

5. Filter sample through a pre-washed glass fiber filter. Add the filter precipitate and filter to a 250 ml Erlenmeyer flask.

6. Add 200 mL with ASTM Type II water. Let the filter rest undisturbed in the water for 5 minutes. Remove the filter from the flask with a pair of tweezers, ensuring that the precipitate remains in the flask. Stir with a magnetic stirrer for at least five minutes to resuspend the precipitate.

7. With the flask still on the stir plate, add 10 ml of the iodine standard solution and then 2 ml of 6N HCL. Titrate with the standard sodium thiosulfate solution until the color lightens to a pale yellow. Add afew drops of starch solution which results in a dark blue color, and continue titrating until a colorless endpoint is reached. Record the volume of sodium thiosulfate used to the nearest 0.02 ml.

7.10 Analyze one laboratory control sample for every twenty samples or each day's batch, whichever is more frequent. The LCS should consist of 200 mL of ASTM Type II water spiked with 2.0 mL of the sodium sulfide standard.

7.11 Analyze one method blank for every twenty samples or each day's batch, whichever is more frequent. The method blank consists of 200 mL of ASTM Type II water carried through the entire analysis.

7.12. Analyze one sample duplicate for every twenty samples and one sample spike for every twenty samples or each day's batch. The sample selected as the matrix spike should be spiked with 2.0 mL of the sodium sulfide standard.

CALCULATIONS:

7.13 Iodine (I_2)meq consumed = {(I_2N * Vol I_2, mL) - $Na_2S_2O_3$ N* Vol $Na_2S_2O_3$, mL)}

7.14 Sulfide (S=) mg = (I_2meq consumed)(16 mg S=/meq)

7.15 Sulfide (S=) mg/L $= \frac{(I_2 \text{ meq consumed})(16 \text{ mg S=/meq})(1000 \text{ mL/L})}{\text{Sample Vol, mL}}$

7.16 Recordkeeping requirements are illustrated in the example logbook entries shown in Figure 1.

8.0 QUALITY CONTROL AND ACCEPTANCE CRITERIA

8.1 Acceptance criteria for the LCS is 80-120% recovery. If LCS is out-of-criteria associated samples should be reanalyzed if possible. If samples can not be reanalyzed due to hold time expiration or insufficient sample volume, a Corrective Action Report must be initiated and reported results should be footnoted appropriately.

8.2 Acceptance criteria for the method blank is a sulfide concentration less than or equal to the PQL (1.0 mg/L). If the method blank is out-of-criteria associated samples must be reanalyzed if possible. If samples can not be reanalyzed due to hold time expiration or insufficient sample volume, a CAR must be initiated and reported results footnoted appropriately.

8.3 Acceptance criteria for the matrix spike and duplicate are 75-125% recovery for the matrix spike and relative percent difference between sample and duplicative results < 20% for results > three times the PQL For sample results less than three times the PQL, the RPD between sample and duplicate should be < 100%. If matrix spike recovery or duplicate RPD is out of criteria notate result in the raw data and on client sponsor checklist if laboratory problem is not suspected. If laboratory problem is suspected, reanalyze samples for confirmation.

9.0 METHOD PERFORMANCE

10.0 APPLICABLE DOCUMENTS/REFERENCES

EPA Method 376.1, "Methods for Chemical Analysis of Water and Wastes," EPA-600/4-79-020, March 1983.

TITLE: **TITRIMETRIC DETERMINATION OF SULFIDE USING EPA METHOD 376.1**

TABLE 1

QC REQUIREMENTS

Parameter/ Method	QC Check	Minimum Frequency	Acceptance Criteria	Corrective Action
Titrimetric Sulfide Method 376.1	Method blank	One per prep batch	No analyte detected >PQL	(1) Investigate source of contamination (2) Reprep and analyze method blank and all samples processed with the contaminated blank
	LCS/ICV	One per prep batch	80-120 %R; Statistically derived from lab data	(1) Recalibrate and reanalyze sample batch
	Matrix Spike	One for every set of 10 samples	75-125 %R	(1) Notate sample result in raw data with Notation I-1
	Sample Duplicate	One sample duplicate per ten samples	RPD ≤20	(1) If lab QC in criteria and matrix interference suspected, flag data (2) Else, reanalyze
	Demonstration of analyst proficiency; accuracy and precision			
	MDL study	Once per year	MDL< the given PQLs	Repeat MDL

TITLE: **TITRIMETRIC DETERMINATION OF SULFIDE USING EPA METHOD 376.1**

TABLE 2

SUMMARY OF METHOD MODIFICATIONS

TOPIC	KATAHDIN SOP CA-722-00	METHOD 376.1
Apparatus/Materials		
Reagents	0.0375 N sodium thiosulfate is purchased commercially.	0.025 N sodium thiosulfate is prepared.
Sample preservation/ handling		
Procedures		
QC - Spikes		
QC - LCS		
QC - Accuracy/Precision		
QC - MDL		

TABLE 3

PROCEDURE CONDENSATION

FIGURE 1

EXAMPLE OF LOGBOOK PAGE

FIGURE 2

EXAMPLE CALCULATIONS

Uncontrolled Copy

TRIANGLE LABORATORIES, INC.
*CONFIDENTIAL and PROPRIETARY INFORMATION

* All information contained in this document is confidential and proprietary to Triangle Laboratories, Inc. This confidential information may not be reproduced, removed, or disclosed without the prior written consent of Triangle Laboratories, Inc.

EXTRACTION OF PCDD/PCDF FROM SOLIDS (NOT TISSUE) - 8290

TLI SOP No. DSP105	Version: 15	Effective Date:	July 31, 1998
Author:	Don Harvan	Date Written:	May 4, 1998
Authorization:	Management	Date Authorized:	5/27/98

I. **SCOPE AND APPLICATION:** This method provides procedures for the extraction of polychlorinated dibenzo-p-dioxin (tetra- through octachlorinated homologues; PCDDs) and polychlorinated dibenzofuran (tetra- through octachlorinated homologues; PCDFs) from non-tissue solids, including but not limited to soil, sediment, pulp, sludge, paper and/or cardboard, according to SW-846 Method 8290. Only the extraction procedure is contained in this SOP.

II. **SAFETY CONSIDERATIONS:** Samples may contain harmful substances. Wear labcoat, appropriate eyewear and gloves. Toluene and ethanol are flammable; avoid flames and sparks. The procedure has been validated for either heptane or hexane, since heptane is much less of a health hazard, it should be used instead of hexane whenever possible, but hexane can be used if heptane is unavailable. Do not breathe the vapors, and avoid contact with skin or eyes, as these solvents may cause irritation, nausea, and dizziness. For additional safety information, see the TLI Safety and Health Manual and the appropriate MSDS.

NOTES: **Slight procedural differences exist for specified sample types in this SOP. Be careful not to overlook these differences.**

III. **REAGENTS:**

A. Heptane- pesticide grade (< 1 ppm residue)

B. Toluene- pesticide grade (< 1 ppm residue)

C. Ethanol- OmnySolve grade

D. Ethanol/toluene (68/32 v/v) - Take 68 parts (by volume) of Ethanol and mix well with 32 parts (by volume) of Toluene.

©1990-1998 Triangle Laboratories, Inc. All rights reserved.

Uncontrolled Copy

IV. GLASSWARE PREPARATION

A. All glassware used in this procedure must have been prepared according to glassware washing SOP.

B. The following glassware is needed for each sample:

1. beaker
2. 500 mL or 250 mL flat bottom flask
3. forceps
4. spatula
5. thimble holder - pre-Soxhlet extracted and ready to use
6. Soxhlet extractor - pre-Soxhlet extracted and ready to use

C. If wet sample ≥ 15 g, Soxhlet Dean Stark (SDS) extractor must be used in addition to the Soxhlet extractor. Be sure the SDS extractor has been pre-Soxhlet extracted.

D. The flask, thimble holder and Soxhlet or SDS extractor may be 250 or 500 mL, but all pieces must be the same size.

E. If SDS is required, assemble the SDS extractor with stopcock.

F. Rinse all glassware with n-heptane.

G. Label each beaker and flask by placing a color coded sample label on top of a strip of colored lab tape. The colored lab tape is necessary because the adhesive on the color coded labels is difficult to remove from the glass and will cause contamination problems.

H. All flasks require two labels - one on the side of the flask and one on the neck.

V. EXTRACTION PROCEDURE:

A. Plan the extraction batch. An extraction batch can contain up to twenty (20) samples and must include a method blank, a spike pair, and at least one(1) Lab

©1990-1998 Triangle Laboratories, Inc. All rights reserved.

Control Spike (LCS). Complete the QC batch form, including all samples and QC samples in the extraction batch.

B. Observe and document the physical appearance and consistency of each sample in the wet lab observation log in MILES.

C. Using the percent moisture analysis, determine the amount of sample necessary for a 10 g dry weight sample.

Note: Mix the sample well before taking an aliquot for extraction.

D. For each sample, weigh the amount of sample determined in step VI.C. above. Record the sample weight on the Sample Preparation Management and Tracking Form (SPMFT).

E. Make sure homogeneity is maintained--exclude anything that does not constitute sample's natural matrix.

F. Clean balance by swiping with heptane.

G. Zero balance. Weigh sample and its container.

H. Record the gross weight on the STMF (Sample Tracking and Management Form).

I. Tare beaker in which sample is to be transferred.

J. Record the sample weight on the STMF (Sample Tracking and Management Form). Also indicate with the letter"Y" or "N" if all the sample was used.

(Y)=There is enough sample left to perform re-extraction
(N)=There is NOT enough sample left to perform re-extraction

K. Reweigh sample and its container weight. Record the post-gross weight.

L. Prepare the blank using pre-extracted G-8 filters for pulps and all dried and ground samples. Prepare the blank using pre-extracted sand for all normal ash/sediment/soil/sludge samples. If any laboratory control samples (LCS and/or

©1990-1998 Triangle Laboratories, Inc. All rights reserved.

Uncontrolled Copy

LCSD) are included in the batch, use the same matrix as Blank. Weigh out 10 grams (± 0.4) for each blank and/or OPR prepared.

M. Check the volume of each standard solution relative to the last volume mark. The bottom of the meniscus must be at the mark.

N. Spike all samples with 20 µL USF-I (0.1µg/mL). Spike any Lab Control Spikes,(LCS/LCSD), Matrix Spikes (MS/MSD) with 40 µL USF-MX (0.01 µg/mL). Record the volume, lot number, concentration and expiration date of each standard on the SPMFT and initial and date the entry. At the end of the spiking process, mark the bottom of the meniscus with a fine point permanent marking pen. Return the standard vials to the storage drawer.

Note: Dioxin standards must be stored at room temperature in amber, glass vials, with Teflon lined septa caps. Spiking instructions can be found in See SOP on Concentration of Extracts Using Rotary Evaporator.

O. After spiking place a glass wool plug on top of the sample in each thimble. Use pre-extracted glasswool.

P. Prepare the Soxhlet apparatus by:

1. Use a 500 mL setup, place 400 mL toluene* in the flatbottom flask. Add 5-6 Teflon boiling chips in each flask.
2. Place the label containing information for the concentration process on the boiling flask on top of the colored lab tape. Write the solvent used on the flask.
3. Place the pre-Soxhleted thimble holder on top of the flask.

Q. ***NOTE:** GP pulp sludge samples require 68:32 ethanol/toluene instead of toluene. GP pulp samples require ethanol instead of toluene. The volume remains 400 mL for 500 mL setup.

R. Place the thimble with the spike sample into the thimble holder. Be sure to seat the thimble at the bottom of the holder.

S. **NOTE:** While the Soxhlet apparatus is sitting on the counter, keep the top capped with aluminum foil to avoid contamination.

©1990-1998 Triangle Laboratories, Inc. All rights reserved.

Uncontrolled Copy

T. Place the Soxhlet on top of the thimble holder. If Soxhlet Dean Stark (SDS) is being used, be sure the stopcock is closed.

U. Place the Soxhlet apparatus on the heating mantle and connect the Soxhlet apparatus to the condenser at the ground glass joint. Cap the top of the condenser with aluminum foil.

V. Wrap the thimble holder and Soxhlet extractor with foil. Do not cover the condenser.

W. **NOTE:** If using ethanol as the sole solvent, do not wrap any of the apparatus with aluminum foil.

X. Place a piece of colored tape on the condenser to indicate it is being used for a sample and needs to be pre-Soxhlet extracted after the sample extraction is completed.

Y. If the samples have been designated **high level** write **2X** on the tape. If samples have designated **Isolation** write **3X** on the tape.

Z. Turn on the heat. If using a hot plate, use the heat setting #5. If using a six (6) place mantle, use the HIGH setting.

AA. Check the units after one (1) hour. Each unit should be cycling at a rate of five (5) times per hour, have no leaks and have sufficient solvent. Open the aluminum foil on the thimble holder to check the cycling action and close the wrapping. Make adjustments as necessary.

BB. If adjustments were required, check the units again in one (1) hour. Otherwise check again in six (6) hours.

CC. If the weighed sample is >30g, drain the water from the SDS halfway through the extraction (i.e., approximately 8 hours after turning on the heaters).

DD. Extract the sample for 16 hours.

Original stamped in blue: ORIGINAL

©1990-1998 Triangle Laboratories, Inc. All rights reserved.

OFFICIAL COPY

Uncontrolled Copy

TRIANGLE LABORATORIES, INC.
CONFIDENTIAL and PROPRIETARY INFORMATION

EXTRACTION OF PCDD/PCDF FROM SOLIDS (NOT TISSUE) - 8290

TLI SOP No. DSP105	Version: 15	Date Written: May 4, 1998

TRIANGLE LABORATORIES, INC. PAGE 1 OF 1

Dioxin Sample Preparation Tracking & Management Form

Project: 91500 Client: Triangle Laboratories, Inc. (TLI01)

Solvent(s)/Acid(s): _____ / _____ / _____ Method: 8290E:Tetra-octa Matrix: _____

Lot Numbers: _____ / _____ / _____ Extraction Date: __/__/__

IS Spike: 20 µl conc: 0.1000 ng/µl

SS Spike: ___ µl conc: __.___ ng/µl

MS Spike: 0 µl conc: 0.0000 ng/µl

LCS Spike: 0 µl conc: 0.0000 ng/µl

_____	_____	_____	_____	Chemist
_____	_____	_____	_____	Spike #
_____	_____	_____	_____	* ID
__/__/__	__/__/__	__/__/__	__/__/__	* Expir
__/__/__	__/__/__	__/__/__	__/__/__	* Date
__ : __	__ : __	__ : __	__ : __	* Time
_____ng/µl	_____ng/µl	_____ng/µl	_____ng/µl	* Conc.
_____ µl	_____ µl	_____ µl	_____ µl	* Vol.

SS.crd	TLI SAMPLE ID / CLIENT SAMPLE ID	Gross Weight Before	Gross Weight After	SAMPLE SIZE g / ml	* Conc.	* Vol.		* Time	Any Left? yes/no
000	TLI Blank / TLI Method Blank								

Gross weight of sample container - sample before/after aliquot removal.

Comments: _____

_____

_____

_____ Initials: _____ Date: __/__/__

Initials of both SPIKER AND OBSERVER must be entered. XXXXX = Gross Weight not provided for WATER Samples.

REV 05/27/97 (PSTMP 7)

ATTACHMENT 1

©1990-1998 Triangle Laboratories, Inc. All rights reserved.

Uncontrolled Copy

TRIANGLE LABORATORIES, INC.
CONFIDENTIAL and PROPRIETARY INFORMATION

EXTRACTION OF PCDD/PCDF FROM SOLIDS (NOT TISSUE) - 8290	
TLI SOP No. DSP105 Version: -15	Date Written: May 4, 1998

Composition of Fortification Standards

USF-I

Analyte	Concentration (µg/mL)
13C, 2,3,7,8-TCDF	0.1
13C, 2,3,7,8-TCDD	0.1
13C, 1,2,3,7,8-PeCDF	0.1
13C, 1,2,3,7,8-PeCDD	0.1
13C, 1,2,3,6,7,8-HxCDF	0.1
13C, 1,2,3,6,7,8-HxCDD	0.1
13C, 1,2,3,4,6,7,8-HpCDF	0.1
13C, 1,2,3,4,6,7,8-HpCDD	0.1
13C-OCDD	0.2

USF-MX

	Concentration (µg/mL)
3-MonoCDF	0.01
3-MonoCDD	0.01
2,3-DiCDF	0.01
2,3-DiCDD	0.01
2,3,8-TriCDF	0.01
1,2,4-TriCDD	0.01
2,3,7,8-TCDF	0.01
2,3,7,8-TCDD	0.01
1,2,3,7,8-PeCDF	0.05
2,3,4,7,8-PeCDF	0.05
1,2,3,7,8-PeCDD	0.05
1,2,3,4,7,8-HxCDF	0.05
1,2,3,6,7,8-HxCDF	0.05
1,2,3,7,8,9-HxCDF	0.05
2,3,4,6,7,8-HxCDF	0.05
1,2,3,4,7,8-HxCDD	0.05
1,2,3,6,7,8-HxCDD	0.05
1,2,3,7,8,9-HxCDD	0.05
1,2,3,4,6,7,8-HpCDF	0.05
1,2,3,4,7,8,9-HpCDF	0.05
1,2,3,4,6,7,8-HpCDD	0.05
OCDF	0.1
OCDD	0.1

USF-C

Analyte	Concentration (µg/mL)
37Cl- 2,3,7,8-TCDD	0.01

ATTACHMENT 2

©1990-1998 Triangle Laboratories, Inc. All rights reserved.

OFFICIAL COPY

UNCONTROLLED COPY

TRIANGLE LABORATORIES, INC.
*CONFIDENTIAL and PROPRIETARY INFORMATION

* All information contained in this document is confidential and proprietary to Triangle Laboratories, Inc. This confidential information may not be reproduced, removed, or disclosed without the prior written consent of Triangle Laboratories, Inc.

EXTRACTION OF PCDD/PCDF FROM WATER FOR METHODS 1613, 8290 AND 551

TLI SOP No.	DSP161 Version: 16	Effective Date:	October 23, 1998
Author:	Phil Albro	Date Written:	October 2, 1998
Authorization:	Phil Albro Management	Date Authorized:	10/18/98

I. **SCOPE AND APPLICATION:** This SOP provides procedures for the extraction of polychlorinated dibenzo-p-dioxin and polychlorinated dibenzofuran (PCDD and PCDF) from water samples in accordance with methods 1613 or 8290. It may also be applied to the extraction of tetrachlorodibenzo-p-dioxins and tetrachlorodibenzofuran from water in accordance with method 551. See the SOP on Preparation for Extraction of PCDD/PCDF from Water before using the present SOP.

II. **SAFETY CONSIDERATIONS:** Samples may contain harmful substances. Wear labcoat, appropriate eyewear, and gloves. These solvents are flammable; avoid flames and sparks. Do not breathe the vapors, and avoid contact with skin and eyes. They may cause irritation, nausea, dizziness, and, in extreme cases, death. For additional safety and health information, see the TLI Safety and Health Manual and the appropriate MSDS.

III. **REAGENTS:**

A. Organic-free reagent water- Either Dracor or Fisher HPLC Grade

B. Heptane-pesticide grade or better quality, less than 1 ppm residue on evaporation.

C. Sodium sulfate-anhydrous, pesticide grade.

D. Methylene Chloride-pesticide grade or better quality.

E. Toluene-pesticide grade or better quality.

©1990-1998 Triangle Laboratories, Inc. All rights reserved.

UNCONTROLLED COPY

IV. GLASSWARE PREPARATION:

A. All glassware used in this procedure must have been prepared according to the SOP entitled "Glassware Cleaning".

B. The following glassware is needed for each sample:

2 L separatory funnel with stopper and Teflon© stopcock

A. 1000 mL graduated cylinder

medium glass powder funnel

250 mL round bottom flask

500 mL extraction flask and regular thimble holder (pre-Soxlet extracted).

Soxlet extractor (pre-Soxlet extracted).

Soxhlet Dean-Stark (SDS) extractor - pre-soxhlet extracted and ready for use

A. Assemble the separatory funnel(s) with stopcock and stopper.

B. Rinse the following with heptane:

separatory funnel(s)

graduated cylinder(s)

all flasks

glass powder funnel(s)

A. While rinsing the separatory funnel(s), close the stopcock and check for leaks. Drain the funnel into a waste container.

B. After rinsing, invert all flasks and allow to fully drain.

©1990-1998 Triangle Laboratories, Inc. All rights reserved.

UNCONTROLLED COPY

C. Plug the powder funnel(s) with pre-cleaned glasswool. Fill the powder funnel 3/4 full with anhydrous sodium sulfate.

I. **SEPARATORY FUNNEL EXTRACTION PROCEDURE:**

A. If has not already been done in the preparation of the sample for extraction, pour the sample volume into a 2 L separatory funnel. Rinse the sample bottle with 60 mL of methylene chloride and transfer to the separatory funnel.

B. Extract the aqueous phase with methylene chloride as follows:

1. Shake the separatory funnel with water sample and methylene chloride for 5 minutes using Glas-Col Automatic Shaker (or 2 minutes by hand). Be sure to vent the funnel periodically to avoid pressure buildup.

   Note: If using the Gas-Col shaker, set the timer for 5 minutes and turn the power on. Slowly increase the speed to 40 or the maximum speed possible without displacing any sample through the vent.

   Allow the solvent layers to settle for 10 minutes. If emulsions occur, filter the water + emulsion through a G8 filter or glass wool with a methylene chloride rinse. Add the methylene chloride rinses to the methylene chloride extract.

2. Drain the methylene chloride layer through anhydrous sodium sulfate into a 250 mL flask.

3. Repeat steps 1-3 two more times using 60 mL methylene chloride for each extraction. A total of three extractions are required for each sample.

1. Rinse the sodium sulfate twice with 10 mL methylene chloride. Collect the methylene chloride rinses in the 250 mL flask containing the sample extract.

I. **EXTRACTING THE FILTER:**

A. Soxhlet extract the filters, glasswool used to break emulsions, and all filtered solids as follows:

©1990-1998 Triangle Laboratories, Inc. All rights reserved.

1. Place filters in a toluene pre-Soxhlet extracted thimble (500 mL size).

2. For methods 1613 and 8290, add 375-400 mL of toluene to the 500 mL boiling flask; For method 551, use 400 mL of ethanol: toluene 68:32 (v/v) to the 500 mL flask.

3. Add 5-6 Teflon boiling chips to the boiling flask.

4. Place the label containing information for the concentration process on the boiling flask on top of colored lab tape. Write solvent used on flask with marker.

   a) Do not place set up on hotplates until extraction of the water phase is completed to insure no additional emulsions need to be filtered and the filter or glasswool placed into the thimble with the first filter.

2. Extract using pre-Soxhlet extracted Soxhlet apparatus for 16 hours.

3. After extraction, let cool and ensure the label indicating that this extract is to be combined with the methylene chloride extract from the water phase is still intact.

II. CONTINUOUS LIQUID-LIQUID EXTRACTION PROCEDURE:

Note: The use of the continuous liquid-liquid extractor is always allowed as an alternative to separatory funnel extraction in method 8290. It is the technique of choice when a given sample type is known to produce difficult emulsions. Use this technique with methods 1613 (A or B) and 551 whenever a re-extraction is needed because of low recoveries during the separatory funnel extraction step. Be sure to indicate on the extraction form whenever L-L extraction was used.

Note 2: The L-L extractor simply substitutes for a separatory funnel; therefore all considerations of filtering, determination of solids or particulate solids, or water vs. sludge described in the SOP on Preparation for Extraction of PCDD/PCDF from Water for Methods 1613, 8290 and 551 still apply.

©1990-1998 Triangle Laboratories, Inc. All rights reserved.

UNCONTROLLED COPY

A. Assemble Glassware

1. Using pre-extracted glassware, rinse the extractor body and 500 mL flat bottom flask with methylene chloride. Discard rinse as waste.

2. Place 5-6 methylene chloride pre-extracted boiling chips in the flat bottom flask. Add approximately 250 mL of clean methylene chloride to the flask.

3. Add approximately 150 mL of methylene chloride to the extractor body.

4. Attach extractor body to the flask with green plastic clamp.

5. Label flat bottom with solvent, project number and sample number using color labels.

B. Preparation of Water Sample

1. Measure and record 1 liter of Reagent water each for blank and either OPR (1613), or LCS/LCSD (8290) utilizing a 1000 mL graduated cylinder.

2. Measure 1000 mL of well mixed sample and transfer to the extractor body. Record this volume on the sample preparation and tracking form. Note: If the sample does not contain 1000 mL, record the volume it does contain, but make up the difference with Reagent water. The L-L apparatus needs 1000 mL of water to operate correctly. The sample size to use in calculations, however, is the actual sample size not including make-up water.

3. Rinse the 1000 mL graduated cylinder three times with 20 mL methylene chloride and transfer rinses to the extractor body.

C. Extraction

1. Place Continuous Liquid-Liquid setup on condenser/hot plate and seat securely in place. Use aluminum foil shimmies to align body vertically and to fill any space between hotplate and bottom of the flask.

©1990-1998 Triangle Laboratories, Inc. All rights reserved.

UNCONTROLLED COPY

2. Turn hotplate on to 400 degrees.
3. Extract for 18 hours.
4. Dismantle setup after they have cooled. Keep only the methylene chloride in the flat bottom flask.
5. Discard water and methylene chloride in extractor body as waste.

Original stamped in blue: ORIGINAL

©1990-1998 Triangle Laboratories, Inc. All rights reserved.

UNCONTROLLED COPY

TRIANGLE LABORATORIES, INC.
*CONFIDENTIAL and PROPRIETARY INFORMATION

* All information contained in this document is confidential and proprietary to Triangle Laboratories, Inc. This confidential information may not be reproduced, removed, or disclosed without the prior written consent of Triangle Laboratories, Inc.

EXTRACTION OF PCDD/PCDF FROM POLYURETHANE FOAM (PUFS)

TLI SOP No.	DSP112 Version: 7	Effective Date:	3/24/99
Author:	Joanna Schroeder	Date Written:	January 26, 1998
Authorization:	Phil Albro Management	Date Authorized:	3/17/99

I. **SCOPE AND APPLICATION:** The purpose of this SOP is to describe the procedures used to extract dioxins from "PUFS".

II. **SAFETY CONSIDERATIONS:** Samples may contain harmful substances: Wear labcoat, appropriate eyewear, and gloves. These solvents are flammable; avoid flames and sparks. Avoid contact and avoid breathing fumes. They may cause irritation, nausea, dizziness, and, in extreme cases, death. For additional safety information, see the TLI Safety and Health Manual and the appropriate MSDS.

NOTE: Determine whether it is a joint project. If so, Organics must initiate their part first.

III. **PROCEDURE:**

A. Physical Set Up:

1. Soxhlet extractor
2. 500-mL flat-bottom flask
3. Boiling chips
4. Approx. 400 mL of toluene (or appropriate solvent)
5. Heating element set on "HIGH"

Label appropriate glassware in three places with TLI number and lab number, solvent used, and next procedure.

B. Sample:

PUF with filter(s)

©1990-1998 Triangle Laboratories, Inc. All rights reserved.

COPY

Blank, LCS, LCSD: Lab precleaned PUFs (prespiked or unspiked)

1. Place filter into thimble holder of a Soxhlet extractor. Do not use a thimble.

2. Remove PUF from sleeve and place in thimble holder on top of filter. Do not plug off bottom or top shaft holes.

3. Rinse sleeve with 10 mL toluene, draining through the PUF into flat-bottom flask. Repeat rinsing the sleeve with 10 mL Toluene one more time adding rinses to the flat-bottom flask.

4. The PUFs were pre-spiked with 40 µL of USX-CS 0.1 µg/mL before being used to collect samples.

5. Spike with appropriate amount and type of spike. All samples receive USX-I (40 µL, 0.1 µg/mL). Matrix spike (MS), Matrix Spike Duplicate (MSD), Lab Control Spike (LCS), and Lab Control Spike Duplicate (LCSD) also receive 40 µL 0.01 ng/mL USX-MX.

C. TLI Blank = Prespiked or unspiked PUF blank - treat as a sample.

D. Extraction:

1. Soxhlet extract samples 16 hours with toluene (or appropriate solvent)

2. Spike 8290 extracts with USX-A (40 µL, 0.1 µg/mL). Rotary evaporate to about 10 mL. Sonicate, transfer extract to calibrated scintillation vial. Rinse extraction flask, add rinses to the vial. Bring the volume of the sample to 20 mL, mix well. Transfer half of the sample (10 mL) back to the extraction flask. Archive second half in the scintillation vial in cooler #2. Add 500 µL of tridecane to the extraction flask. Rotary evaporate the sample to near dryness, solvent exchange three (3) times with 20 mL of Heptane or iso-octane.

Clean-Up Sample Extract using Column Chromatography for Dioxin Extracts.

Original stamped in blue: ORIGINAL

©1990-1998 Triangle Laboratories, Inc. All rights reserved.

ORIGINAL COPY

Uncontrolled Copy

TRIANGLE LABORATORIES, INC.
CONFIDENTIAL and PROPRIETARY INFORMATION

* The information contained in this document is confidential and proprietary to Triangle Laboratories, Inc. This confidential information may not be reproduced, removed, or disclosed without the prior written consent of Triangle Laboratories, Inc.

PCDDs AND PCDFs BY HRGC/HRMS - METHOD 8290			
TLI SOP No. DHR182	Version: 6	Effective Date:	March 25, 1998
Author:	Wojciech Krol	Date Written:	February 9, 1998
Authorization:	Management	Date Authorized:	2/16/98

I. **SCOPE AND APPLICATION:** This method provides procedures for the analysis of polychlorinated dibenzo-p-dioxins (tetra- through octachlorinated homologues; PCDDs), and polychlorinated dibenzofurans (tetra- through octachlorinated homologues; PCDFs) from extracts of samples prepared according to SW 846 Method 8290.

II. **SAFETY CONSIDERATIONS:** The 2,3,7,8-TCDD isomer has been found to be acenegenic, carcinogenic, and teratogenic in laboratory animal studies. Other PCDDs and PCDFs containing chlorine atoms in the 2,3,7,8 positions are known to have toxicities comparable to that of 2,3,7,8-TCDD. Extreme care must be exercised in all handling of extracts and standards in the application of this SOP. For additional safety information, see the TLI Safety and Health Manual and the appropriate MSDSs.

III. **EQUIPMENT:** The High-Resolution Gas Chromatograph/High-Resolution Mass Spectrometer/Data System (GC/MS/DS) equipment utilized for this analysis includes the following:

A. Gas Chromatographs: Hewlett Packard 5890 or 5890 Series II (equipped for temperature programming and capillary columns)

B. High Resolution Mass Spectrometers: VG 70 Series, VG 70-SE Series, VG Autospec.

C. Data Systems: VG Analytical PDP11 with 11-250 software or VAX Alpha with Opus 3.2 software.

D. <u>GC Injection Port</u> - The GC injection port is designed for capillary columns. Typically, 2 µL injection volumes are used unless otherwise noted.

E. <u>Gas Chromatograph/Mass Spectrometer(GC/MS) Interface</u> - The GC/MS interface components can withstand 350°C. The interface has been designed so that the separation of 2,3,7,8-TCDD from the other TCDD isomers achieved in the gas chromatographic column is not appreciably degraded. The GC column is fitted directly into the mass spectrometer ion source without being

©1995 - 1998 Triangle Laboratories, Inc. All rights reserved.

exposed to the ionizing electron beam. Graphite ferrules should be avoided in the injection port because they may adsorb the PCDDs and PCDFs. Vespel™, or equivalent, ferrules are recommended.

F. Mass Spectrometer - The static resolving power of the instrument must be maintained at a minimum of 10,000 (10 percent valley).

G. Data System - A dedicated data system is employed to control the rapid selected-ion monitoring (SIM) process and to acquire the data. Quantitation data (peak areas or peak heights) and SIM traces (displays of intensities of each ion signal being monitored including the lock-mass ion as a function of time) must be acquired during the analyses and stored. Quantitation may be reported based upon computer generated peak areas or upon measured peak heights. The data system is set to acquire data as low as 10 ions in a single scan. Table 1. presents a listing of the ions which are typically monitored. The data system is set to switch to different sets of ions (descriptors) at specified times during an HRGC/HRMS acquisition. The data system provides hard copies of individual ion chromatograms for selected gas chromatographic time intervals. It also acquires mass spectral peak profiles and provides hard copies of peak profiles to demonstrate the required resolving power. Measurements of noise on the base line are performed using the hard copies of individual ion chromatograms provided by the data system.

NOTE: The detector ADC zero setting must be set to allow peak-to-peak measurement of the noise on the base line of every monitored channel and allow for good estimation of the instrument resolving power.

H. GC Columns

1. In order to have an isomer specific determination for 2,3,7,8-TCDD and to allow the detection of OCDD/OCDF within a reasonable time interval in one HRGC/HRMS analysis, the 60 m DB-5 fused silica capillary column is used.

2. The 2,3,7,8-TCDF isomer must be confirmed on a 30 m DB-225 fused silica capillary column, when 2,3,7,8-TCDF is detected on the DB-5 column at a level greater than or equal to the target detection limit.

IV. STANDARDS:

A. Calibration Solutions Six nonane solutions containing 17 unlabeled PCDDs and PCDFs and 18 $^{13}C_{12}$ -labeled PCDDs and PCDFs at known concentrations are used to calibrate the instrument. The analyte concentration ranges are homologue dependent, with the lowest values for the tetrachlorinated dioxin and

©1995 - 1998 Triangle Laboratories, Inc. All rights reserved.

furan (0.5 pg/µL) and the highest values for the octachlorinated congeners (2000 pg/µL) (Table 2.).

B. Recovery Standard Solution - This nonane solution contains two recovery standards, $^{13}C_{12}$-1,2,3,4-TCDD and $^{13}C_{12}$-1,2,3,7,8,9-HxCDD, at a nominal concentration of 100 pg/µL per compound. A 20 µL of this solution is spiked into each sample extract before the HRGC/HRMS analysis.

C. GC Column Performance/Retention Window Check Solution (RTCHK)- This solution contains the first and last eluting isomers for each homologous series from tetra- through heptachlorinated congeners. The solution also contains a series of closely eluting TCDD and TCDF isomers for the purpose of documenting the chromatographic resolution (Table 3).

D. Acceptance Criteria for Newly Prepared Standards - All components and concentrations of each calibration standard, recovery standard, internal standard, and matrix spike solutions are verified prior to use for the analysis of samples. Testing consists of back to back analysis of the "test" solution (the newly prepared solution) and a "control" solution (a known good solution). Control solutions are isolated from the production standards in a protected location. Both the control and test solutions are evaluated versus the current continuing calibration standard and versus each other. Each component of the test solution must be within 80 - 120% of the true concentration when calculated versus the control standard. The control standard must be within 80 - 120% of the true value when calculated versus the continuing calibration standard.

E. Standards are stored in 1/2 dram amber glass vials at room temperature.

V. SYSTEM PERFORMANCE CRITERIA

System performance criteria are presented below. It must be documented that all applicable system performance criteria specified in this Section are met before analysis for any sample is performed. Table 4 provides recommended GC conditions that can be used to satisfy the required criteria. During a typical 12-hour analysis sequence, the GC column performance and mass spectrometer resolving power checks must be performed at the beginning of the 12-hour period of operation. A routine calibration verification is required at the beginning and end of each 12-hour period during which samples are analyzed. A method blank or HRGC/HRMS solvent blank is required between a calibration run and the first sample run.

A. GC Column Performance

1. Inject the column performance check solution (Section IV. C.) and acquire selected-ion monitoring (SIM) data as described in Section III. E., III. F., and Table 4.

©1995 - 1998 Triangle Laboratories, Inc. All rights reserved.

2. The chromatographic separation between 2,3,7,8-TCDD and the peaks representing any other TCDD isomers or between 2,3,7,8-TCDF and the peaks representing other TCDF isomers must be resolved with a valley of $\leq$ 25% (Fig. 1.), where:

   Valley Percent = (x/y) x 100

   x = height of valley measured between 2,3,7,8-TCDD or 2,3,7,8-TCDF and the closest TCDD or TCDF eluting isomers, and

   y = the peak height of 2,3,7,8-TCDD or 2,3,7,8-TCDF.

3. The acquisition time windows must be set to allow observation of the first and last eluting isomer of each congener. All first and last eluters of a homologous series should be labeled and identified on chromatograms.

B. Mass Spectrometer Performance

1. The mass spectrometer must be operated in the electron ionization mode. It is recommended that the ionization potential be set to optimize sensitivity for the given column flow and source design. A static resolving power of at least 10,000 (10% valley definition) must be demonstrated at appropriate masses before any analyses are performed. Static resolving power checks must be performed at the beginning and at the end of each 12-hour period of operation. It is recommended, however, that a check of the static resolution be made and documented by using the peak matching unit before and after each analysis. Corrective actions must be implemented whenever the resolving power does not meet the requirement.

2. Chromatography time for PCDDs and PCDFs exceeds the long-term mass stability of the mass spectrometer. Because the instrument is operated in the high-resolution mode, mass drifts of a few ppm can have serious adverse effects on instrument performance. Therefore, a mass-drift correction is mandatory. To that effect, use a lock-mass ion from the reference compound Perfluorokerosene (PFK) used for tuning the mass spectrometer and monitor and record the lock-mass ion channel during SIM acquisitions. The level of the reference compound (PFK) metered inside the ion chamber during HRGC/HRMS analyses should be adjusted so that the amplitude of the selected lock-mass ion signal, regardless of the description number, does not exceed 10% of the full scale deflection for a given set of detector parameters. Under those

©1995 - 1998 Triangle Laboratories, Inc. All rights reserved.

Uncontrolled Copy

conditions, sensitivity changes that might occur during the analysis can be more effectively monitored.

3. Using PFK molecular leak and an appropriate ion within the scan window, tune the instrument to meet the minimum required resolving power of 10,000 (10% valley).

   a) Documentation of the mass spectrometer resolving power is accomplished by recording the peak profile of the high-mass reference signal (m/z 416.9760) obtained during a peak matching experiment by using the low-mass PFK ion at m/z 330.9792 (or lower in mass) as a reference.

   b) The format of the peak profile representative allows manual determination of the peak resolution. The peak width (at 5% peak height) of the high-mass reference ion must not exceed 100 ppm (resolving power: 10,000). Peak width is determined by triangulation with no more than 10% allowance for sampling error. Instrumental ion transmission and resolution will be checked, adjusted and documented in case the resolution is below the minimum required 10,000 resolving power.

VI. CALIBRATION PROCEDURES:

A. Initial Calibration (ICAL)- Initial calibration of the instrument is required before any samples are analyzed for PCDDs and PCDFs. Initial calibration is also required if any continuing calibration does not meet the required criteria listed in Section VI. B..

1. All six calibration solutions listed in Table 2. must be used for the initial calibration.

2. Tune the instrument with PFK to achieve a static resolving power of at least 10,000 (10% valley) as described in section V. B..

3. Inject 2 µL of the GC column performance check solution and acquire SIM mass spectral data as described earlier in Section III. F. - G. Any further analysis must not be performed until it has been documented that the column performance criteria listed in section V. A. was met.

4. Using the same GC and MS conditions that produced acceptable results for the column performance check solution, analyze a 2 µL portion of each of the six calibration solutions with the following requirements.

©1995 - 1998 Triangle Laboratories, Inc. All rights reserved.

Uncontrolled Copy

a) The ratio of integrated ion current for the ions appearing in Table 5 (homologous series quantitation ions) must be within the indicated control limits (set for each homologous series).

b) The ratio of integrated ion current for the ions belonging to the carbon-labeled internal, surrogate, alternate, and recovery standards must be within the control limits stipulated in Table 5.

NOTE: Ion ratios for all 17 native analytes and 18 carbon-labeled internal and recovery standards must be within the specified control limits simultaneously in one run for each of the six (6) calibration standard solutions. If the ion abundance ratios are outside the limits, corrective action must be taken and acceptable abundance ratios achieved before any samples may be analyzed.

c) For each SICP and for each GC signal representing the elution of a target analyte the signal-to-noise ratio (S/N) must be better than or equal to 10:1.

d) Referring to Table 6., calculate the 17 relative response factors (RRF) for unlabeled target analytes relative to their appropriate internal standards, according to the following formula:

$$RRF(n) = \frac{A_x \times Q_{is}}{Q_x \times A_{is}}$$

Where:

RRF(n)=		Analyte RRF
A_x	=	sum of the integrated ion abundances of the quantitation ions (Table 1.) for unlabeled PCDDs/PCDFs,
A_{is}	=	sum of the integrated ion abundances of the quantitation ions (Table 1.) for the labeled internal standards,
Q_{is}	=	quantity of the internal standard injected (pg),
Q_x	=	quantity of the unlabeled PCDD/PCDF analyte injected (pg).

©1995 - 1998 Triangle Laboratories, Inc. All rights reserved.

The RRF(n) is a dimensionless quantity; the units used to express Q_{is} and Q_x must be the same.

e) Calculate the average analyte $\overline{RRF}$ and their respective percent relative standard deviations (%RSD) for the six calibration solutions.

$$\overline{RRF}_{(n)} = \frac{1}{6}\sum_{j=1}^{6} RRF_{(n)j}$$

Where n represents a particular PCDD/PCDF (2,3,7,8 substituted congener), and j is the injection number (or calibration solution number).

f) The relative response factors to be used for the determination of the concentration of total isomers in a homologous series are calculated as follows:

(1) For congeners that belong to a homologous series containing only one isomer (e.g., OCDD and OCDF) or only one 2,3,7,8-substituted isomer (TCDD, PeCDD, HpCDD, and TCDF), the mean RRF used will be the same as the mean RRF determined in Section V. A. 4. e).

NOTE: The calibration solutions do not contain $^{13}C_{12}$-OCDF as an internal standard. This is because a minimum resolving power of 12,000 is required to resolve the $[M+6]^+$ ion of $^{13}C_{12}$-OCDF from the $[M+2]^+$ ion of OCDD (and $[M+4]^+$ from $^{13}C_{12}$-OCDF with $[M]^+$ of OCDD). Therefore, the RRF for OCDF is calculated relative to $^{13}C_{12}$-OCDD.

(2) For congeners that belong to a homologous series containing more than one 2,3,7,8-substituted isomer (PeCDF - two, HxCDF - four, HxCDD - three, HpCDF - two) the mean RRF used for those homologous series will be the average of the mean RRFs calculated for all individual 2,3,7,8-substituted congeners.

NOTE: HRGC/HRMS responses of all isomers in a homologous series that do not have the 2,3,7,8-substitution pattern are assumed to be the same as the

©1995 - 1998 Triangle Laboratories, Inc. All rights reserved.

responses of one or more of the 2,3,7,8-substituted isomer(s) in that homologous series.

g) Referring to Table 7. and 8. calculate relative response factors (RRF) and average relative response factors (RRF) for internal, surrogate, and alternate standards relative to their appropriate recovery standards, according to the following formula:

$$RRF_{(m)} = \frac{A_s \times Q_{rs}}{Q_s \times A_{rs}}$$

$$\overline{RRF}_{(m)} = \frac{1}{6}\sum_{j=1}^{6} RRF_{(m)j}$$

Where:

m	=	congener type,
j	=	injection number,
A_s	=	sum of the integrated ion abundances of the quantitation ions for a given standard,
A_{rs}	=	sum of the integrated ion abundances of the quantitation ions for the appropriate recovery standard,
Q_{rs}, Q_s	=	quantities of, respectively, the recovery standard (rs) and a particular standard injected (pg),
$RRF_{(m)}$	=	relative response factor of a particular standard relative to an appropriate recovery standard, as determined from one injection, and
$\overline{RRF}_{(m)}$	=	calculated mean relative response factor of a particular labeled standard relative to an appropriate recovery standard, as determined from the six initial calibration injections.

5. Acceptance Criteria for Initial Calibration - The criteria listed below for acceptable calibration must be met before any analysis is performed.

©1995 - 1998 Triangle Laboratories, Inc. All rights reserved.

Uncontrolled Copy

a) The percent relative standard deviations for the mean response factors from the 17 unlabeled standards must not exceed ± 20 percent, and those for the labeled reference compounds must not exceed ± 30%.

b) The S/N ratio for the GC signals present in every SICP (including the ones for the labeled standards) must be ≥ 10.

c) The isotopic ratios (Table 5.) must be within the specified control limits.

NOTE: If the criterion for acceptable calibration listed in Section VI. A. 5. a) is met, the analyte specific RRF can then be considered independent of the analyte quantity for the calibration concentration range. The mean RRFs will be used for all calculations until the continuing calibration criteria (Section VI. B.) are no longer met. At such time, new mean RRFs will be calculated from a new set of injections of the calibration solutions.

B. Continuing Calibration Check (CONCAL) - Continuing calibrations must be performed at the beginning of a 12 hour period after successful mass resolution and QC resolution performance checks. A continuing calibration is also required at the end of a 12 hour shift.

1. Inject 2 µL of the CONCAL solution HRCC-3 standard (Table 2). By using the same HRGC/HRMS conditions as described in Section V., and used to determine and document an acceptable calibration as provided in Section VI. A. 5..

2. Acceptance Criteria for Continuing Calibration - The following criteria must be met before further analysis is performed.

a) The measured RRFs for the unlabeled standards obtained during the continuing calibration runs must be within ± 20 percent of the mean values established during the initial calibration (Section VI. A. 4. e) and f)).

b) The measured RRFs for the labeled standards obtained during the routine calibration must be within ± 30 percent of the mean values established during the initial calibration (Section VI. A. 4. g)).

c) The ion-abundance ratios (Table 5.) must be within the allowed control limits.

©1995 - 1998 Triangle Laboratories, Inc. All rights reserved.

Uncontrolled Copy

d) If either one of the criteria in Sections VI. B. 2. a) and b) is not satisfied, repeat one more time. If these criteria are still not satisfied, the entire continuing calibration process must be reviewed.

e) If the continuing calibration at the end of a 12-hour period fails no more than 25% RPD for the unlabeled compounds and 35% RPD for the labeled reference compounds, use the mean RRFs from the two daily calibration runs to compute analyte concentrations, instead of the RRFs obtained from the initial calibration.

NOTE: If RRFs for up to two labeled standards fail by more than 35%, the calibration is considered acceptable, as long as corresponding unlabeled analytes meet criteria.

f) Continuing calibrations analyzed at the end of the 12 hour period which fail by more than 25% RPD for the unlabeled compounds and 35% RPD for the labeled reference compounds must be documented according to the non-conformance SOP. The analyst must assess the effect of failure on overall data quality. The assessment will include evaluation of any spiked samples included in the 12 hour "clock", presence of reportable levels of the affected analytes in the samples, and sample data obtained during the period between beginning and ending calibrations. All samples which contain reportable levels of a "failed" analyte will be reanalyzed unless a passing spiked sample has been analyzed between the sample and the ending calibration standard.

VII. ANALYSIS

A. A valid analysis of column performance check, calibration and method or instrument blank must have been obtained prior to the analysis of any sample.

B. Remove the sample extract (blown to dryness) or blank from storage. Add 20 µL of recovery standard and mix thoroughly. Care must be taken to coat the walls of the vial several times to dissolve the sample material deposited on the walls during the concentration process.

NOTE: A final volume of 20 µL or more should be used whenever possible. A 10 µL final volume is difficult to handle, and injection of 2 µL out of 10 µL leaves little sample for confirmations and repeat injections, and for archiving.

©1995 - 1998 Triangle Laboratories, Inc. All rights reserved.

Uncontrolled Copy

C. Inject a 2 µL aliquot of the extract into the GC, operated under the GC conditions that have produced acceptable CONCAL and RTCHK results.

D. Acquire SIM data using the same acquisition and mass spectrometer operating conditions previously used to determine the relative response factors.

NOTE: The acquisition period must at least encompass the PCDD/PCDF overall retention time window previously determined. Selected ion current profiles (SICP) for the lock-mass ions (one per mass descriptor) must also be recorded and included in the data package. These SICPs must be true representations of the evolution of the lock-mass ions amplitudes during the HRGC/HRMS run. The analyst may be required to monitor a PFK ion, not as a lock mass, but as a QC ion, in order to meet this requirement. It is recommended to examine the QC ion or lock-mass ion SICP for obvious basic sensitivity and stability changes of the instrument during the GC/MS run that could affect the measurements. Report any discrepancies in the case narrative.

E. Identification Criteria - For a gas chromatographic peak to be identified as a PCDD or PCDF, it must meet all of the following criteria:

1. Retention Times

a) For 2,3,7,8-substituted congeners, which have an isotopically labeled internal or recovery standard present in the sample extract (this represents a total of 10 congeners including OCDD; Table 1.), the retention time (RRT; at maximum peak height) of the sample components (i.e., the two ions used for quantitation purposes listed in Table 1.), must be within -1 to +3 seconds of the isotopically labeled standard.

b) For 2,3,7,8-substituted compounds that do not have an isotopically labeled internal standard present in the sample extract (this represents a total of eight congeners; Table 1.), the retention time must fall within 0.005 retention time units of the relative retention times measured in the continuing calibration. Identification of OCDF is based on its retention time relative to $^{13}C_{12}$-OCDD as determined from the 12 hour continuing calibration results.

c) For non-2,3,7,8-substituted compounds (tetra through octa; totaling 119 congeners), the retention time must be within the corresponding homologous retention time windows established by analyzing the RTCHK solution.

©1995 - 1998 Triangle Laboratories, Inc. All rights reserved.

d) The ion current responses for both ions used in quantitation (e.g., for TCDDs: m/z 319.8965 and 321.8936) must reach maximum simultaneously (± 2 seconds).

e) The ion current responses for both ions used for the labeled standards (e.g., for $^{13}C_{12}$-TCDD: m/z 331.9368 and m/z 333.9339) must reach maximum simultaneously (± 2 seconds).

2. Ion Abundance Ratios

The integrated ion current for the two ions used for quantitation purposes must have a ratio between the lower and upper limits established for the homologous series to which the peak is assigned (Table 5.).

3. Signal-to-Noise (S/N) Ratio

All ion current intensities must be ≥ 2.5 times noise level for positive identification of a PCDD/PCDF compound or a group of coeluting isomers.

4. Polychlorinated Diphenyl Ether Interferences

In addition to the above criteria, the identification of a GC peak as a PCDF can only be made if no signal having a S/N ≥ 2.5 is detected, at the same retention time (± 2 seconds), in the corresponding polychlorinated diphenyl ether (PCDPE, Table 1.) channel or if the PCDPE signal is less than 10% of the PCDF signal.

F. Quantitation

1. For gas chromatographic peaks that have met specified criteria calculate the concentration of the PCDD or PCDF compounds using the formula:

$$C_x = \frac{A_x \times Q_{is}}{A_{is} \times W \times \overline{RRF}_{(n)}}$$

Where:

C_x = concentration of unlabeled PCDD/PCDF congeners (or group of coeluting isomers within an homologous series) in pg/g,

A_x = sum of the integrated ion abundances of the quantitation ions (Table 1.) for unlabeled PCDDs/PCDFs,

©1995 - 1998 Triangle Laboratories, Inc. All rights reserved.

A_{is} = sum of the integrated ion abundances of the quantitation ions (Table 1.) for the labeled internal standards,

Q_{is} = quantity, in pg, of the internal standard added to the sample before extraction,

W = weight or volume, in grams or liters, of the sample (solid or liquid), and

$\overline{RRF}_{(n)}$ = calculated mean relative response factor for the analyte.

2. Calculate the percent recovery of the nine internal standards measured in the sample extract, using the formula:

$$\text{Internal Standard Recovery} = \frac{A_{is} \times Q_{rs}}{Q_{is} \times A_{rs} \times \overline{RRF}_{(m)}} \times 100$$

Where:

A_{is} = sum of the integrated ion abundances of the quantitation ions (Table 1.) for the labeled internal standard,

A_{rs} = sum of the integrated ion abundances of the quantitation ions (Table 1.) for the labeled recovery standard; the selection of the recovery standard depends on the type of congeners (Table 7.),

Q_{is} = quantity, in pg, of the internal standard added to the sample before extraction,

Q_{rs} = quantity, in pg, of the recovery standard added to the cleaned-up sample residue before HRGC/HRMS analysis, and

$\overline{RRF}_{(m)}$ = calculated mean relative response factor for the labeled internal standard relative to the appropriate (see Table 7) recovery standard.

3. Calculate the percent recovery of seven surrogate and alternate standards using expression VII. F. 2..

NOTE: For the air samples (PUF, M-0023A) calculate percent recovery of five surrogate standards relative to their appropriate internal standards.

©1995 - 1998 Triangle Laboratories, Inc. All rights reserved.

4. If the concentration in the final extract of any of the fifteen 2,3,7,8-substituted PCDD/PCDF compound exceeds the dynamic range of the instrument (i.e., saturation in a mass channel) then solvent will be added to the extract to bring the signal level into the instrument's dynamic range. Any dilutions must be pre-approved by the client.

5. The total concentration for each homologous series of PCDD and PCDF is calculated by summing up the concentrations of all positively identified isomers of each homologous series. Therefore, the total should also include the 2,3,7,8-substituted congeners. The total number of GC signals included in the homologous total concentration value must be specified in the report.

6. Sample Specific Estimated Detection Limit - The sample specific estimated detection limit (EDL) is the concentration of a given analyte required to produce a signal with a peak height of at least 2.5 times the background signal level. An EDL is calculated for each 2,3,7,8-substituted congener that is not identified, regardless of whether or not other non-2,3,7,8-substituted isomers are present. Two methods of calculation can be used, depending on the type of response produced during the analysis of a particular sample.

   a) Samples giving a response for at least one quantitation ion that is less than 2.5 times the background level.

      The area of the analyte is replaced by the noise level measured in a region of the chromatogram clear of genuine GC signals multiplied by an empirically determined factor. The detection limits represent the maximum possible concentration of a target analyte that could be present without being detected.

$$DL = \frac{2 \times 2.5 \times (F \times H) \times Q_{is}}{A_{is} \times \overline{RRF}_{(n)} \times W}$$

Where:

DL	=	estimated detection limit for a target analyte, expressed in ng or pg.
2.5	=	minimum signal/ noise required for a GC signal to be accepted.
F	=	an empirical number that approximates the area to height ratio for a GC signal. (F= 3.7 for all dioxin/ furan analyses.)

©1995 - 1998 Triangle Laboratories, Inc. All rights reserved.

Uncontrolled Copy

H	=	height of the noise.
A_{is}	=	integrated current of the characteristic ions of the corresponding internal standard.
Q_{is}	=	amount of internal standard added to the sample before extraction.
$\overline{RRF}_{(n)}$	=	mean analyte relative response factor from the initial calibration.
W	=	sample weight or volume.
2	=	used to account for the two signals present for every analyte.

b) Samples characterized by a response above the background level with a S/N of at least 2.5 for both quantitation ions.

When the response of a signal having the same retention time as a 2,3,7,8-substituted congener has a S/N in excess of 2.5 and does not meet ion ratio requirements (Table 5.) calculate the "Estimated Maximum Possible Concentration" (EMPC) according to the expression shown in Section VII. F. 1., except that A_x should represent the sum of the area under the smaller peak and of the other peak area calculated using the theoretical chlorine isotope ratio.

VIII. QUALITY CONTROL REQUIREMENTS

A. GC column performance must be demonstrated initially and verified prior to analyzing any sample in a 12-hour period. The GC column performance check solution must be analyzed under the same chromatographic and mass spectrometric conditions used for other samples and standards.

B. Routine calibrations must be performed at the beginning of a 12-hour period after successful mass resolution and GC resolution performance checks and at the end of a 12-hour period following the analysis of samples.

C. The target detection limits will be the following:

1. TDLs for waters (sample size - 1L):

≤ 10 ppq	TCDD & TCDF
≤ 50 ppq	Penta - HeptaCDD & CDF
≤ 100 ppq	OCDD & OCDF

©1995 - 1998 Triangle Laboratories, Inc. All rights reserved.

2. TDLs for solids (sample size - 10g):

   ≤ 1 ppt TCDD & TCDF

   ≤ 5 ppt Penta - HeptaCDD & CDF

   ≤ 10 ppt OCDD & OCDF

3. For air (e.g., PUF, M-0023A) or Wipes (sample size - 1):

   ≤ 50 pg TCDD & TCDF

   ≤ 250 pg Penta - HeptaCDD & CDF

   ≤ 500 pg OCDD & OCDF

D. Method Blank

1. Percent recoveries of all labeled standards should be between 40 - 135%. Method blank with standard recoveries below 40% (but ≥ 25%) is acceptable as long as signal to noise for affected standards is ≥ 10:1.
2. Target detection limits must be met for each analyte. (VIII. C.)
3. No reportable analytes should be present in the Method Blank. Up to 3 analytes may be present at levels below 1/2 Target Detection Limit (TDL) as long as the compounds were not reported in the previous analysis.
4. For Method Blanks associated with high level samples, the analyte level in the blank must be < 5% of the quantity present in the samples.

E. LCS/ LCSD and MS/ MSD

1. Percent recoveries of all labeled standards should be between 40 - 135%. LCS/ LCSD or MS/ MSD with labeled standard recoveries below 40% (but ≥ 25%) are acceptable as long as signal to noise for affected standards is ≥ 10:1.
2. Percent recoveries of all analytes should be between 70 - 130%. For up to two analytes, recoveries may be as high as 145% or as low as 60%, as long as the associated relative percent differences (%RPDs) meet criteria.
3. Relative percent difference between LCS and LCSD or MS and MSD should be ≤ 20% for all analytes. For up to two analytes, %RPDs may be higher (up to 35%), as long as the associated percent recoveries meet criteria.

©1995 - 1998 Triangle Laboratories, Inc. All rights reserved.

Uncontrolled Copy

F. Samples

1. Percent recoveries of all labeled standards should be between 40 - 135%. Samples with standard recoveries below 40% (but ≥ 25%) are acceptable as long as signal to noise for affected standards is ≥ 10:1. In the case of OCDD internal standards, the OCDF analyte must be below TDL also.

2. Specific detection limits must not exceed the target detection limits unless prohibited by a limited sample size or the need for dilution.

3. If the method blank contains reportable analytes but those analytes are not detected in the sample, the sample data may be reported.

4. Samples which fail acceptance criteria listed above (VIII. F. 1. and 2.) or associated with failing method blank or LCS/ LCSD (VIII. D. 1. - 4.; VIII. E. 1. - 3.) must be reextracted and reanalyzed. Exceptions may be made for sample matrices which require extreme additional cleanup procedures.

Original stamped in blue: ORIGINAL

©1995 - 1998 Triangle Laboratories, Inc. All rights reserved.

TABLE 1: ELEMENTAL COMPOSITIONS AND EXACT MASSES OF THE IONS MONITORED BY HRGC/HRMS FOR PCDDs AND PCDFs

Descriptor Number[b]	Accurate Mass[a]	Ion Type	Elemental Composition	Analyte
2	292.9825	LOCK	C_7F_{11}	PFK
	303.9016	M	$C_{12}H_4{}^{35}Cl_4O$	TCDF
	305.8987	M+2	$C_{12}H_4{}^{35}Cl_3{}^{37}ClO$	TCDF
	315.9419	M	$^{13}C_{12}H_4{}^{35}Cl_4O$	TCDF (S)
	317.9389	M+2	$^{13}C_{12}H_4{}^{35}Cl_3{}^{37}ClO$	TCDF (S)
	319.8965	M	$C_{12}H_4{}^{35}Cl_4O_2$	TCDD
	321.8936	M+2	$C_{12}H_4{}^{35}Cl_3{}^{37}ClO_2$	TCDD
	327.8847	M	$C_{12}H_4{}^{37}Cl_4O_2$	TCDD (S)
	330.9792	QC	C_7F_{13}	PFK
	331.9368	M	$13C_{12}H_4{}^{35}Cl_4O_2$	TCDD (S)
	333.9339	M+2	$^{13}C_{12}H_4{}^{35}Cl_3{}^{37}ClO_2$	TCDD (S)
	375.8364	M+2	$C_{12}H_4{}^{35}Cl_5{}^{37}ClO$	HxCDPE
	339.8597	M+2	$C_{12}H_3{}^{35}Cl_4{}^{37}ClO$	PeCDF
	341.8567	M+4	$C_{12}H_3{}^{35}Cl_3{}^{37}Cl_2O$	PeCDF
	351.9000	M+2	$^{13}C_{12}H_3{}^{35}Cl_4{}^{37}ClO$	PeCDF (S)
	353.8970	M+4	$^{13}C_{12}H_3{}^{35}Cl_3{}^{37}Cl_2O$	PeCDF (S)
	355.8546	M+2	$C_{12}H_3{}^{35}Cl_4{}^{37}ClO_2$	PeCDD
	357.8516	M+4	$C_{12}H_3{}^{35}Cl_3{}^{37}Cl_2O_2$	PeCDD
	367.8949	M+2	$^{13}C_{12}H_3{}^{35}Cl_4{}^{37}ClO_2$	PeCDD (S)
	369.8919	M+4	$^{13}C_{12}H_3{}^{35}Cl_3{}^{37}Cl_2O_2$	PeCDD (S)
	409.7974	M+2	$C_{12}H_3{}^{35}Cl_6{}^{37}ClO$	HpCDPE
3	373.8208	M+2	$C_{12}H_2{}^{35}Cl_5{}^{37}ClO$	HxCDF
	375.8178	M+4	$C_{12}H_2{}^{35}Cl_4{}^{37}Cl_2O$	HxCDF
	383.8639	M	$^{13}C_{12}H_2{}^{35}Cl_6O$	HxCDF (S)

©1995 - 1998 Triangle Laboratories, Inc. All rights reserved.

TABLE 1 CONTINUED

Descriptor Number[b]	Accurate Mass[a]	Ion Type	Elemental Composition	Analyte
3 Continued	385.8610	M+2	$^{13}C_{12}H_2{}^{35}Cl_5{}^{37}ClO$	HxCDF (S)
	389.8157	M+2	$C_{12}H_2{}^{35}Cl_5{}^{37}ClO_2$	HxCDD
	391.8127	M+4	$C_{12}H_2{}^{35}Cl_4{}^{37}Cl_2O_2$	HxCDD
	392.9760	LOCK	C_9F_{15}	PFK
	401.8559	M+2	$^{13}C_{12}H_2{}^{35}Cl_5{}^{37}ClO_2$	HxCDD (S)
	403.8529	M+4	$13C_{12}H_2{}^{35}Cl_4{}^{37}Cl_2O_2$	HxCDD (S)
	445.7555	M+4	$C_{12}H_2{}^{35}Cl_6{}^{37}Cl_2O$	OCDPE
	430.9729	QC	C_9F_{13}	PFK
4	407.7818	M+2	$C_{12}H^{35}Cl_6{}^{37}ClO$	HpCDF
	409.7789	M+4	$C_{12}H^{35}Cl_5{}^{37}Cl_2O$	HpCDF
	417.8253	M	$^{13}C_{12}H^{35}Cl_7O$	HpCDF (S)
	419.8220	M+2	$^{13}C_{12}H^{35}Cl_6{}^{37}ClO$	HpCDF (S)
	423.7766	M+2	$C_{12}H^{35}Cl_6{}^{37}ClO_2$	HpCDD
	425.7737	M+4	$C_{12}H^{35}Cl_5{}^{37}Cl_2O_2$	HpCDD
	435.8169	M+2	$^{13}C_{12}H^{35}Cl_6{}^{37}ClO_2$	HpCDD (S)
	437.8140	M+4	$^{13}C_{12}H^{35}Cl_5{}^{37}Cl_2O_2$	HpCDD (S)
	479.7165	M+4	$C_{12}H^{35}Cl_7{}^{37}Cl_2O$	NCDPE
	430.9729	LOCK	C_9F_{17}	PFK
	441.7428	M+2	$C_{12}{}^{35}Cl_7{}^{37}ClO$	OCDF
	443.7399	M+4	$C_{12}{}^{35}Cl_6{}^{37}Cl_2O$	OCDF
	457.7377	M+2	$C_{12}{}^{35}Cl_7{}^{37}ClO_2$	OCDD
	459.7348	M+4	$C_{12}{}^{35}Cl_6{}^{37}Cl_2O_2$	OCDD
	469.7779	M+2	$^{13}C_{12}{}^{35}Cl_7{}^{37}ClO_2$	OCDD (S)
	471.7750	M+4	$^{13}C_{12}{}^{35}Cl_6{}^{37}Cl_2O_2$	OCDD (S)

©1995 - 1998 Triangle Laboratories, Inc. All rights reserved.

Uncontrolled Copy

TABLE 1 CONTINUED

Descriptor Number[b]	Accurate Mass[a]	Ion Type	Elemental Composition	Analyte
4 Continued	513.6775	M+4	$C_{12}{}^{35}Cl_8{}^{37}Cl_2O$	DCDPE
	442.9728	QC	$C_{10}F_{17}$	PFK

a) The following nuclidic masses were used:

H = 1.007825
C = 12.000000
^{13}C = 13.003355
F = 18.9984
O = 15.994915
^{35}Cl = 34.968853
^{37}Cl = 36.965903

S = Labeled Standard
QC = Ion Selected for Monitoring the Instrument Stability During the GC/MS Analysis

b) Descriptor 1 contains mono-, di- and trichlorinated dibenzodioxins and dibenzofurans that are not quantitated by Method 8290.

©1995 - 1998 Triangle Laboratories, Inc. All rights reserved.

Uncontrolled Copy

TABLE 2: COMPOSITION OF THE INITIAL CALIBRATION SOLUTIONS

Compound	Concentrations (pg/µL) Sol. Number: 1	2	3	4	5	6
Unlabeled Analytes						
2,3,7,8-TCDD	0.5	1	10	50	100	200
2,3,7,8-TCDF	0.5	1	10	50	100	200
1,2,3,7,8-PeCDD	2.5	5	50	250	500	1000
1,2,3,7,8-PeCDF	2.5	5	50	250	500	1000
2,3,4,7,8-PeCDF	2.5	5	50	250	500	1000
1,2,3,4,7,8-HxCDD	2.5	5	50	250	500	1000
1,2,3,6,7,8-HxCDD	2.5	5	50	250	500	1000
1,2,3,7,8,9-HxCDD	2.5	5	50	250	500	1000
1,2,3,4,7,8-HxCDF	2.5	5	50	250	500	1000
1,2,3,6,7,8-HxCDF	2.5	5	50	250	500	1000
1,2,3,7,8,9-HxCDF	2.5	5	50	250	500	1000
2,3,4,6,7,8-HxCDF	2.5	5	50	250	500	1000
1,2,3,4,6,7,8-HpCDD	2.5	5	50	250	500	1000
1,2,3,4,6,7,8-HpCDF	2.5	5	50	250	500	1000
1,2,3,4,7,8,9-HpCDF	2.5	5	50	250	500	1000
OCDD	5	10	100	500	1000	2000
OCDF	5	10	100	500	1000	2000
Internal Standards						
$^{13}C_{12}$-2,3,7,8-TCDD	100	100	100	100	100	100
$^{13}C_{12}$-1,2,3,7,8-PeCDD	100	100	100	100	100	100
$^{13}C_{12}$-1,2,3,6,7,8-HxCDD	100	100	100	100	100	100
$^{13}C_{12}$-1,2,3,4,6,7,8-HpCDD	100	100	100	100	100	100

©1995 - 1998 Triangle Laboratories, Inc. All rights reserved.

Uncontrolled Copy

TABLE 2 CONTINUED

Compound	Concentrations (pg/µL) Sol. Number: 1	2	3	4	5	6
Internal Standards Continued						
$^{13}C_{12}$-OCDD	200	200	200	200	200	200
$^{13}C_{12}$-2,3,7,8-TCDF	100	100	100	100	100	100
$^{13}C_{12}$-1,2,3,7,8-PeCDF	100	100	100	100	100	100
$^{13}C_{12}$-1,2,3,6,7,8-HxCDF	100	100	100	100	100	100
$^{13}C_{12}$-1,2,3,4,6,7,8-HpCDF	100	100	100	100	100	100
Surrogate Standards						
$^{37}Cl_4$-2,3,7,8-TCDD	0.5	1	10	50	100	200
$^{13}C_{12}$-2,3,4,7,8-PeCDF	100	100	100	100	100	100
$^{13}C_{12}$-1,2,3,4,7,8-HxCDD	100	100	100	100	100	100
$^{13}C_{12}$-1,2,3,4,7,8-HxCDF	100	100	100	100	100	100
$^{13}C_{12}$-1,2,3,4,7,8,9-HpCDF	100	100	100	100	100	100
Alternate Standard						
$^{13}C_{12}$-1,2,3,7,8,9-HxCDF	100	100	100	100	100	100
$^{13}C_{12}$-2,3,4,6,7,8-HxCDF	100	100	100	100	100	100
Recovery Standards						
$^{13}C_{12}$-1,2,3,4-TCDD	100	100	100	100	100	100
$^{13}C_{12}$-1,2,3,7,8,9-HxCDD	100	100	100	100	100	100

©1995 - 1998 Triangle Laboratories, Inc. All rights reserved.

TABLE 3: GC RETENTION TIME WINDOW DEFINING SOLUTION AND ISOMER SPECIFICITY TEST STANDARD (SECTION IV. C.)

DB-5 COLUMN GC RETENTION TIME WINDOW DEFINING SOLUTION

CDD/ CDF	FIRST ELUTED	LAST ELUTED
TCDF	1,3,6,8	1,2,8,9
TCDD	1,3,6,8	1,2,8,9
PeCDF	1,3,4,6,8	1,2,3,8,9
PeCDD	1,2,4,7,9	1,2,3,8,9
HxCDF	1,2,3,4,6,8	1,2,3,4,8,9
HxCDD	1,2,4,6,7,9	1,2,3,4,6,7
HpCDF	1,2,3,4,6,7,8	1,2,3,4,7,8,9
HpCDD	1,2,3,4,6,7,9	1,2,3,4,6,7,8

DB-5 COLUMN TCDD SPECIFICITY TEST STANDARD

1,2,3,7 + 1,2,3,8 - TCDD
2,3,7,8 - TCDD
1,2,3,9 - TCDD

DB-225 COLUMN TCDF ISOMER SPECIFICTY TEST STANDARD

2,3,4,7 - TCDF
2,3,7,8 - TCDF
1,2,3,9 - TCDF

©1995 - 1998 Triangle Laboratories, Inc. All rights reserved.

Uncontrolled Copy

TABLE 4: GAS CHROMATOGRAPHY CONDITIONS

Column type	**DB-5**	**DB-225**
Length (m)	60	30
i.d. (mm)	0.25	0.25
Film Thickness (um)	0.25	0.25
Carrier Gas	Helium	Helium
Carrier Gas Flow (mL/min)	1-2	1-2
Injection Mode	⇐ splitless ⇒	
Valve Time (s)	60	60
Initial Temperature (°C)	150	130
Injection Port Temperature (°C)	250	250
Program Temperature	⇐ See Note ⇒	

Note: The GC temperature program is subject to change. Refer to work area guidelines for exact definitions of the current run conditions and descriptor name.

©1995 - 1998 Triangle Laboratories, Inc. All rights reserved.

Uncontrolled Copy

TABLE 5. ION-ABUNDANCE RATIO ACCEPTABLE RANGES FOR PCDDs AND PCDFs

Number of Chlorine Atoms	Ion Type	Theoretical Ratio	Control Limits	
			Lower	Upper
4	M/M+2	0.77	0.65	0.89
5	M+2/M+4	1.55	1.32	1.78
6	M+2/M+4	1.24	1.05	1.43
6a	M/M+2	0.51	0.43	0.59
7b	M/M+2	0.44	0.37	0.51
7	M+2/M+4	1.04	0.88	1.20
8	M+2/M+4	0.89	0.76	1.02

a) Used only for ^{13}C-HxCDF
b) Used only for ^{13}C-HpCDF

©1995 - 1998 Triangle Laboratories, Inc. All rights reserved.

Uncontrolled Copy

PCDDs AND PCDFs BY HRGC/HRMS - METHOD 8290	
TLI SOP No DHR182 Version: 6	Date Written: February 9, 1998

TABLE 6. UNLABELED ANALYTES QUANTITATION RELATIONSHIPS

Analyte	Standard Used During Quantitation
2,3,7,8-TCDD	$^{13}C_{12}$-2,3,7,8-TCDD
Other TCDDs	$^{13}C_{12}$-2,3,7,8-TCDD
1,2,3,7,8-PeCDD	$^{13}C_{12}$-1,2,3,7,8-PeCDD
Other PeCDDs	$^{13}C_{12}$-1,2,3,7,8-PeCDD
1,2,3,4,7,8-HxCDD	$^{13}C_{12}$-1,2,3,6,7,8-HxCDD
1,2,3,6,7,8-HxCDD	$^{13}C_{12}$-1,2,3,6,7,8-HxCDD
1,2,3,7,8,9-HxCDD	$^{13}C_{12}$-1,2,3,6,7,8-HxCDD
Other HxCDDs	$^{13}C_{12}$-1,2,3,6,7,8-HxCDD
1,2,3,4,6,7,8-HpCDD	$^{13}C_{12}$-1,2,3,4,6,7,8-HpCDD
Other HpCDD	$^{13}C_{12}$-1,2,3,4,6,7,8-HpCDD
OCDD	$^{13}C_{12}$-OCDD
2,3,7,8-TCDF	$^{13}C_{12}$-2,3,7,8-TCDF
Other TCDFs	$^{13}C_{12}$-2,3,7,8-TCDF
1,2,3,7,8-PeCDF	$^{13}C_{12}$-1,2,3,7,8-PeCDF
2,3,4,7,8-PeCDF	$^{13}C_{12}$-1,2,3,7,8-PeCDF
Other PeCDFs	$^{13}C_{12}$-1,2,3,7,8-PeCDF
1,2,3,4,7,8-HxCDF	$^{13}C_{12}$-1,2,3,6,7,8-HxCDF
1,2,3,6,7,8-HxCDF	$^{13}C_{12}$-1,2,3,6,7,8-HxCDF
1,2,3,7,8,9-HxCDF	$^{13}C_{12}$-1,2,3,6,7,8-HxCDF

©1995 - 1998 Triangle Laboratories, Inc. All rights reserved.

Uncontrolled Copy

TABLE 6 CONTINUED

Analyte	Standard Used During Quantitation
2,3,4,6,7,8-HxCDF	$^{13}C_{12}$-1,2,3,6,7,8-HxCDF
Other HxCDFs	$^{13}C_{12}$-1,2,3,6,7,8-HxCDF
1,2,3,4,6,7,8-HpCDF	$^{13}C_{12}$-1,2,3,4,6,7,8-HpCDF
1,2,3,4,7,8,9-HpCDF	$^{13}C_{12}$-1,2,3,4,6,7,8-HpCDF
Other HpCDFs	$^{13}C_{12}$-1,2,3,4,6,7,8-HpCDF
OCDF	$^{13}C_{12}$-OCDD

©1995 - 1998 Triangle Laboratories, Inc. All rights reserved.

Uncontrolled Copy

TABLE 7: INTERNAL STANDARDS QUANTITATION RELATIONSHIPS

Internal Standard	Standard Used During Percent Recovery Determination
$^{13}C_{12}$-2,3,7,8-TCDD	$^{13}C_{12}$-1,2,3,4-TCDD
$^{13}C_{12}$-1,2,3,7,8-PeCDD	$^{13}C_{12}$-1,2,3,4-TCDD
$^{13}C_{12}$-1,2,3,6,7,8-HxCDD	$^{13}C_{12}$-1,2,3,7,8,9-HxCDD
$^{13}C_{12}$-1,2,3,4,6,7,8-HpCDD	$^{13}C_{12}$-1,2,3,7,8,9-HxCDD
$^{13}C_{12}$-OCDD	$^{13}C_{12}$-1,2,3,7,8,9-HxCDD
$^{13}C_{12}$-2,3,7,8-TCDF	$^{13}C_{12}$-1,2,3,4-TCDD
$^{13}C_{12}$-1,2,3,7,8-PeCDF	$^{13}C_{12}$-1,2,3,4-TCDD
$^{13}C_{12}$-1,2,3,6,7,8-HxCDF	$^{13}C_{12}$-1,2,3,7,8,9-HxCDD
$^{13}C_{12}$-1,2,3,4,6,7,8-HpCDF	$^{13}C_{12}$-1,2,3,7,8,9-HxCDD

©1995 - 1998 Triangle Laboratories, Inc. All rights reserved.

Uncontrolled Copy

TABLE 8: SURROGATE/ALTERNATE STANDARDS QUANTITATION RELATIONSHIPS

Surrogate/Alternate/Cleanup Standard	Standard Used During Percent Recovery Determination
$^{37}Cl_4$-2,3,7,8-TCDD	$^{13}C_{12}$-1,2,3,4-TCDD
$^{13}C_{12}$-2,3,4,7,8-PeCDF	$^{13}C_{12}$-1,2,3,4-TCDD
$^{13}C_{12}$-1,2,3,4,7,8-HxCDD	$^{13}C_{12}$-1,2,3,7,8,9-HxCDD
$^{13}C_{12}$-1,2,3,4,7,8-HxCDF	$^{13}C_{12}$-1,2,3,7,8,9-HxCDD
$^{13}C_{12}$-1,2,3,4,7,8,9-HpCDF	$^{13}C_{12}$-1,2,3,7,8,9-HxCDD
$^{13}C_{12}$-1,2,3,7,8,9-HxCDF	13C_{12}-1,2,3,7,8,9-HxCDD
$^{13}C_{12}$-2,3,4,6,7,8-HxCDF	$^{13}C_{12}$-1,2,3,7,8,9-HxCDD

NOTE : For air samples (PUF and M-0023A) recoveries of surrogate standards are quantitated relative to their appropriate internal standards.

©1995 - 1998 Triangle Laboratories, Inc. All rights reserved.

Uncontrolled Copy

TRIANGLE LABORATORIES, INC.
CONFIDENTIAL and PROPRIETARY INFORMATION

PCDDs AND PCDFs BY HRGC/HRMS - METHOD 8290	
TLI SOP No DHR182 Version: 6	Date Written: February 9, 1998

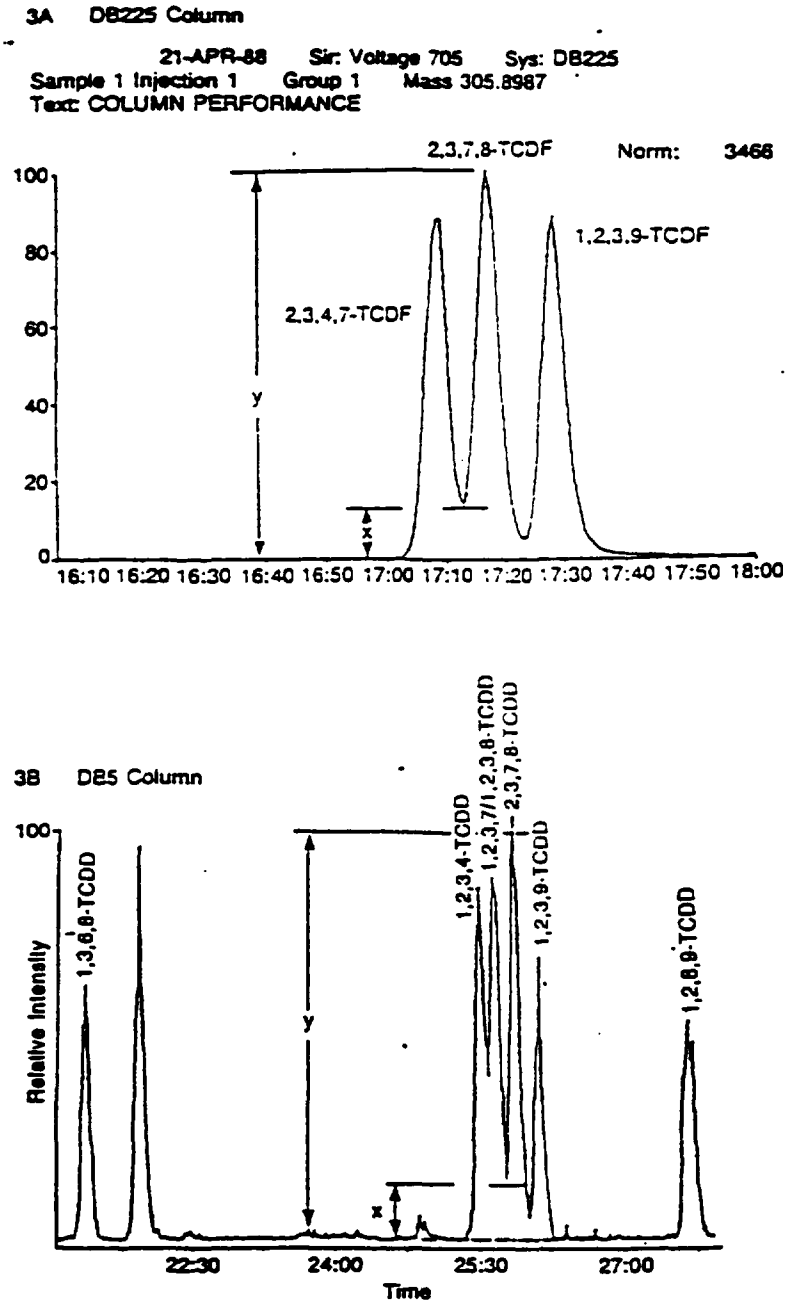

FIGURE 1. Valley between 2,3,7,8 - Tetra Dioxin and Furan Isomers and Other Closely Eluted Isomers.

©1995 - 1998 Triangle Laboratories, Inc. All rights reserved.

APPENDIX 1

Deviations from and improvements to US EPA Method 8290
POLYCHLORINATED DIBENZODIOXINS (PCDDs) AND POLYCHLORINATED DIBENZOFURANS (PCDFs) BY HIGH-RESOLUTION GAS CHROMATOGRAPHY/ HIGH-RESOLUTION MASS SPECTROMETRY (HRGC/ HRMS)
as performed at Triangle Laboratories, Inc.

See Section	
• IV. A. and Table 2.	Triangle Laboratories uses 6 calibration points ranging from 0.5 pg/µL to 200 pg/µL for tetrachlorinated dioxin and furan. Concentrations of penta- through heptachlorinated analytes are 5 times higher than tetra congeners and octachlorinated analytes are 10 times higher (Compare with Table 5., Method 8290).
• IV. A.	Seven more labeled PCDDs/ PCDFs are used as surrogate and alternate standards to provide additional quality control information.
• IV. A.	The 1,2,3,6,7,8 - hexachlorodibenzofuran (HxCDF) is used as an internal standard instead of 1,2,3,4,7,8 - HxCDF. Triangle Laboratories uses 1,2,3,4,7,8 - HxCDF as a surrogate standard.
• IV. A.	Each carbon-labeled standard in the initial calibration solution has a concentration of 100 pg/µL except $^{13}C_{12}$ - OCDD, which is at 200 pg/µL. Concentrations of $^{13}C_{12}$ - labeled standards in sample fortification solutions are the same as in the initial calibration solution (See section 5.9., Method 8290).
• V.	The method blank does not need to be analyzed on each analysis clock that samples are analyzed. Once a valid analysis is provided for the method blank it may be replaced with HRGC/ HRMS solvent blank (See section 8.2., Method 8290).
• V. B. 3. a)	Documentation of the mass spectrometer resolving power is accomplished by recording the peak profile of m/z 416.9760 and 330.9792 (See section 8.2.2.3., Method 8290).
• VII. F. 6. a)	To calculate the sample specific Estimated Detection Limit, noise equivalent area is used instead of noise height (See section 7.9.5.1.1., Method 8290).
• VIII. D. - F. 1.	The Internal Standard recoveries in all QC samples and field samples are considered valid as long as the signal to noise ratio is greater than 10:1, the recovery is ≥ 25% and target detection limits for the analytes are met (See section 8.4., Method 8290).
• VIII. E. 2.	For up to two analytes in LCS/ LCSD and MS/ MSD, recoveries may be as high as 145% or as low as 60%, as long as the associated relative percent differences (%RPDs) meet criteria.

©1995 - 1998 Triangle Laboratories, Inc. All rights reserved.

Uncontrolled Copy

APPENDIX 1 Continued

- VIII. E. 3. For up to two analytes in LCS/ LCSD and MS/ MSD, %RPDs may be higher (up to 35%), as long as the associated percent recoveries meet criteria.

©1995 - 1998 Triangle Laboratories, Inc. All rights reserved.

Controlled Copy #: NA

@ AIR TOXICS LIMITED
STANDARD OPERATING PROCEDURE

ANALYSIS OF VOLATILE ORGANIC COMPOUNDS IN SUMMA™ POLISHED CANISTERS BY GC/MS SELECTIVE ION MONITORING

EPA METHOD TO-14/TO-14A/TO-15

SOP #38

Revision Date: 10/22/99
Revision #: 2
Reason for Revision: External Use

	Signature	Print	Title	Date
Updated By:	James Porter	James Porter	Quality Assurance Manager	10/30/00
Technical Review:	Nathan S. Shafer	Nathan S. Shafer	Team Leader	10.30.00
QA Review:	Wendy E. Branch	Wendy E. Branch	QA Coordinator	10/30/00
Laboratory Director:	Linda L. Freeman	Linda L. Freeman		10/30/00

1.0 SCOPE AND APPLICATION

To provide a procedural guide for the application of EPA Method TO-14 to the analysis of low level volatile organic compounds in ambient air using evacuated stainless steel summa canister collection. To describe specific adaptations of the method to the analysis of the EPA Clean Air Act List of target compounds.

2.0 METHOD SUMMARY

2.1 Description

EPA Method TO-14 describes techniques for the analysis of airborne VOCs collected as whole air samples in stainless steel canisters. 500 mL of air is withdrawn from the canister through a mass flow controller and cryofocused at -189°C in a dewar of liquid argon. The focused air sample is then flash heated through a hydrophobic drying system which removes water from the sample stream prior to analysis by GC/MS in the SIM mode.

2.2 Deviations

Modifications to EPA Methods TO-14/TO-14A/TO-15 used by ATL to carry out the analyses of air samples are summarized in Table 1 (page 2).

3.0 HEALTH AND SAFETY

Normal laboratory safety precautions must be used when preparing standards from neat materials for this method and when analyzing samples. These precautions include working in a fume hood, wearing eye protection, and wearing a laboratory coat when handling neat materials. Also, precautions must be taken to avoid skin contact with neat materials. Refer to the compound specific MSDS for additional information. Care must also be taken when handling syringes to ensure that a needle stick does not occur.

4.0 SAMPLE PRESERVATION, CONTAINERS, HANDLING, AND STORAGE

An air sample is collected in an evacuated stainless steel Summa canister or Tedlar bag. Upon receipt, the canisters will be between ca. 10" Hg vacuum and ambient pressure. Canister receipt vacuum/pressure is reported on the first page of the data report. If abnormal conditions exist the project contact is notified by the sample custodian or a client service representative before analysis can begin. Data from such samples will be qualified. Prior to analysis, the canister is pressurized to 5 psig for 6 L canisters and 15 psig for 1 L canisters. Samples are stored in the sample cage in the main laboratory. Analysis must occur within 3 days for Tedlar bags and 30 days for canisters.

Table 1. Summary of Method Modifications

Requirement	TO-14	TO-14A	TO-15	ATL Modifications
Sampling/concentrator system	Nafion Drier	Nafion Drier	Multisorbent concentrator	Multisorbent concentrator
Canister cleaning - clean air supply	Cryogenic Trap	Cryogenic Trap	Cryogenic Trap	Use of Humidified UHP Air
Canister certification	Pressurize w/humidified zero air.	Pressurize w/humidified zero air.	Pressurize w/humidified zero air.	Pressurize w/dry UHP nitrogen
Sample load volume	400 mL	400 mL	Not mandated	Up to 0.5 liter
Blank	Humid air blank	Humid air blank	Humid air blank	Humid air blank for standard analysis. Dry air blank for low level analysis.
Blank acceptance criteria	< 0.2 ppbv	< 0.2 ppbv	< DL	< DL
BFB absolute abundance criteria	Within 10% of that from previous day.	Within 10% of that from previous day.	Not addressed	CCV surrogate recoveries demonstrate stability from one day to the next
BFB acceptance criteria	SW-846 Protocol	SW-846 Protocol	CLP protocol	SW-846 protocol
Concentration of IS spike	Not specified	Not specified	10 ppbv	25 ppbv for TO-14; 10 ppbv for low level
Dilutions for initial calibration	Dynamic dilutions or static using canisters.	Dynamic dilutions or static using canisters.	Dynamic dilutions or static using canisters.	Syringe dilutions
Flow rates/operating parameters				Optimixed. See procedures section.
ICAL RRF %RSD acceptance criteria	Not specified	Not specified	30% or less, 40% or less for up to two compounds	30% or less for standard compounds, 40% or less for non-standard and polar compounds
IS recoveries	Not specified	Not specified	Within 40% of mean over ICAL for blanks, and w/in 40% of daily CCV for samples.	Within 40% of CCV recoveries for blank and samples.
IS RTs	Not specified	Not specified	Within .33 min from most recent calibration (either ICAL or daily)	Within 0.5 min. of RT in daily CCV
Daily CCV	Not specified	Not specified	70 - 130%	Standard compounds: 70 – 130% for at least 90%; Non-standard and polar compounds: 60 - 140% for at least 80%
RF for quantitation	From ICAL	From ICAL	From daily CCV	From ICAL
Canister leak check	24 hour, positive pressure	24 hour, positive pressure	24 hour, positive pressure	20 minute, vacuum check
MSD scan range	18 - 250 amu	18 – 250 amu	35 - 300 amu	35 – 350 amu

5.0 *INTERFERENCES AND POTENTIAL PROBLEMS*

Interferences to this method generally include high levels of carbon dioxide, water and/or heavy hydrocarbons. High levels of CO_2 in the samples can cause freezing of the trap and thus a flow drop on the sample interface. When this occurs, a smaller amount of sample is collected resulting in higher dilution factors. Very high levels of moisture in the samples cause erratic internal standard and surrogate responses and therefore likely erratic target compound responses. When a sample has high levels of heavy hydrocarbons, the analyst may have to dilute the sample more than the target compound level requires, ensuring the system is not contaminated.

6.0 *EQUIPMENT/APPARATUS*

6.1 List of Equipment/Apparatus

- 25 µL, 500 µL, 1 mL, 2.5 mL, 5 mL, 25 mL, & 50 mL gastight syringes (CMS)
- Certified NIST Traceable VOC blends - Scott Specialty Gases
- Aldrich Chemical High Purity Neat Standards
- Tedlar Bags (1L, 3L and 10L) SKC
- Heating Tapes - Various Lengths (Cole Palmer)
- Power Controllers (Cole Palmer)
- HP 5973 MSDs with (UNIX Operating System) Thru-Put Software
- NIST /NBS75.1K Library Search Software
- DB-624 105 m X 0.53 Megabore column
- Liquid Argon 5500 cu. ft. dewar (Local Supplier)
- Ultra High Purity Helium (Local Supplier)
- Liquid cryogenic dewars (300 mL, 500 mL, 5000 mL) CMS
- Laboratory designed cyrofocusing TO-14 interface equipped for sampling and backflushing contents of the cryotrap to the drier. The cryotrap consists of 1/8" stainless steel tubing packed with acid washed glass beads and wrapped around a cartridge heater. Purge/desorption gas flow is regulated by a flow controller on the canister interface. Optional syringe injection of gaseous standards is accomplished through a septum cap just prior to the sampling valve.
- Laboratory designed drying system consists of a hydrophobic sorbent housed in a heated block. Water passes through the drier at ambient temperature while organic VOCs are retained. Following the drying cycle, the tube is heated to 250°C and the VOCs are backflushed to the GC/MS through a heated transfer line connected to the packed column injection port.
- Tylan Mass Flow Control Module (1 to 100 mL/min. air)
- Edwards Vacuum Pump

- Laboratory Designed Heated Dynamic Gas Dilution Manifold - based on flow controllers and digital flow sensors for calibration and diluent gases
- Laboratory Designed Canister Receiving Station equipped with high-resolution vacuum/pressure gauge and diluent gas inlet.

6.2 Analysis is carried out on a GC/MS system equipped with a Megabore™ inlet adapter, cryogenic oven controller, a J&W Scientific DB-624 column and a Hewlett-Packard 5973 Mass Selective Detectors.

6.4 SIM parameters

Both the primary and secondary ions, for each target compound are, selected for monitoring by GC/MS software. Compounds are identified using both the ion profiles generated and the retention time windows.

6.5 Quantitation is based on the internal standard technique. The internal standards, bromochloromethane, chlorobenzene-d_5 and 1,4-difluorobenzene are spiked into each standard, blank, sample and QC sample at 10 ppbv. The surrogates 1,2-dichloroethane-d_4, toluene-d_8 and 4-bromofluorobenzene are also spiked into all standards, blanks, samples and QC samples at 10 ppbv.

7.0 CANISTER MOUNTING AND SPIKING PROCEDURES

7.1 Upon receipt, the canister vacuum/pressure is recorded. Canister receipt vacuum/pressure is reported on the front page of the data report. If abnormal conditions exist the project contact is notified by the sample custodian or a client services representative before analysis can begin. Data from such samples will be qualified. Prior to analysis, the canister is pressurized to 5 psig for 6 L canisters and 15 psig for 1 L canisters.

7.2 Canisters are connected to the inlet line of the cryofocusing unit. Connections are leak checked by monitoring the flow. As vacuum is achieved, the flow will drop to zero. After leak checking is complete, the valve on the canister is opened and flow allowed to equilibrate. During this time, a 1 mL injection of IS/Surrogates is made.

7.3 Sampling is initiated by rotating the valve into the sample position. Sampling continues for a period of 10 minutes or until the desired volume of air has been withdrawn.

8.0 STANDARD PREPARATION

8.1 Stock Standards

Standards are prepared from NIST Traceable Scott Specialty Gas VOC blends and supplemented with neat materials. The standards are blended into the working range by taking known aliquots and using density-based calculations. Maximum standard holding times are noted below. In addition, if standard degradation is observed (e.g., poor recoveries), new standards are prepared.

The original TO-14 list of analytes* is purchased from Scott Specialty Gases as a 5 ppmv in a high pressure cylinder blend *(Appendix B)*. The

blend is produced by the manufacturer using criteria designed to minimize vapor phase interactions and maximize long-term stability.

* *Excluding benzyl chloride, styrene, and both trans- & cis-1,3-dichloropropene, which are included in the neat materials mix, Section*

Inject 480 mL of the 5 ppmv certified TO-14 standard into an evacuated 6 L canister that contains 50 μL of water. This canister is then used for the combined standard described in Section 8.3.

8.2 Neat Materials Calibration Blend

Analytes not present in the Scott Gas blends are purchased in neat form. These compounds are blended in the gas phase as follows. A Tedlar bag is filled with an accurately measured volume of UHP N_2. Prescribed amounts of the neat material are then injected into the bag. Density based calculations are used to determine the prescribed amounts and final concentrations.

Note: Tedlar bags are used for the static dilution medium due to their inherent inertness to polar analytes. Standards should not, however, be stored in the Tedlar bags beyond 3 days. Fresh calibration standards are prepared and then transferred to Summa canisters for storage. The standards prepared from neat materials are stable in Summa canisters for 6 months.

Appropriate amounts of neat materials are spiked into a Tedlar bag filled with UHP nitrogen. The standard is then drawn into an evacuated 6 L Summa canister and then pressurized. The final concentration of the standard is 50 ppmv.

8.3 Combined Calibration Blend

For the combined standard, 48 mL of the neat laboratory blended standards described in Sections 8.2 are added to the certified TO-14 standard canister described in Section 8.1. After bringing the canister to 15 psi (a 1:2 dilution), the final concentration of all analytes is 200 ppbv. Aliquots are then introduced onto the instrument by mass flow controller. Standards prepared in this manner may be used for up to 3 month from date of preparation.

8.4 Internal Standard/Surrogate Mix

Blend the prescribed amount of neat material into a Tedlar bag to a final volume of 10 L. Transfer the contents of the Tedlar bag to an evacuated Summa canister and pressurize to 15 psig (1:2.01 dilution). The canister is then vented to 0 psig a second time and re-pressurized to 15 psig (1:2.01 dilution). The canister is vented to 0 psig a third time and re-pressurized to 20 psig (1:2.36 dilution) for a final concentration of 5 ppmv. This type of standard may be used for up to 6 months.

	COMPOUND	DENSITY	FW	µL	ppmv
	Bromochloromethane	1.991	129.39	1.3	48.1
	Chlorobenzene-d_5	1.157	117.60	2.0	47.3
	1,4-Difluorobenzene	1.110	114.09	2.0	46.8
(Surrogate)	1,2-Dichloroethane-d_4	1.666	236.06	2.8	47.5
(Surrogate)	Toluene-d_8	0.943	100.21	2.1	47.5
(Surrogate)	4-Bromofluorobenzene	1.593	175.01	2.2	48.2

One mL of the IS blend is injected into the canister interface as each standard blank, and sample is being loaded. The IS amount loaded in this fashion will be 10 ppbv per component.

8.5 BFB Check Mix

Two µL of a certified, 99% pure 25 ng/µL 4-bromofluorobenzene standard purchased from Supelco is injected for the 50 ng on-column tune check. The standard is stored in sealed ampules and expires 1 year after the opening date, or the manufacturer's expiration date, whichever comes first.

9.0 CALIBRATION AND QUALITY CONTROL PROCEDURES

The following sections discuss method-specific quality control procedures. Generic control limits are used for evaluation of TO-14 instrument performance. Laboratory limits are established for surrogate recoveries as a second means for evaluating the analytical systems.

9.1 BFB Tune Check

A daily (every 24-hours, or every 12-hours if project requires) tune check with 4-bromofluorobenzene is achieved by directly injecting 2 µL of the BFB check standard into the GC in accordance with SW-846 tuning criteria in the full scan mode. The relative abundances of selected ions are tabulated and reported as outlined in Appendix C. Analysis cannot proceed unless all criteria of the tune check are met.

9.2 Initial Calibration

The percent relative standard deviations (%RSD) for all standard TO-14 compounds must be ≤30%, and for all non-standard and polar compounds, must be ≤40%. Otherwise a new initial calibration curve is performed. In those instances where the RSD for one or more analytes exceeds 30%, the average of the RSD values is determined by summing the RSD value for each analyte and dividing by the total number of analytes. Calibration curve is considered acceptable if the mean RSD for all analytes in the calibration is ≤ 30%.

The multipoint calibration is constructed by loading varying amounts of the combined calibration blend (Section 8.3) on the canister interface. The standard volume of air withdrawn is 0.5 liter, consequently lower loadings result in an effective dilution.

Calibration is typically performed using five levels, though certain projects only require three. One standard must be at or near the reporting limit.

The Relative Response Factor (RRF) from the daily continuing calibration verification (mid-level standard) is used to quantitate results unless a project specifically requires that the average RRF from the initial calibration curve is used.

9.3 Second Source Calibration Verification

A second source check containing all target compounds is analyzed after each initial curve, to verify that the standards are correct and the accuracy of the calibration. The acceptance criterion for the second source recoveries is as follows. For the "Standard" TO-14 list compounds, recoveries for 90% of the compounds must be ±30%. For the "Non-standard and Polar" TO-14 list compounds recoveries for 80% of the compounds must be ±40%. The delineation between standard and non-standard TO-14 compounds can be found in Appendix A. (Some projects require a ±25% second source recovery criterion for 100% of the target compounds.) If the noted limits are exceeded, the problem is investigated and if warranted, a new analytical curve is analyzed for the out-of-limits compound(s).

9.4 Continuing Calibration Verification

A continuing calibration verification (CCV) is performed at the start of each day and if required by a specific project, every 12 hours. This is an analysis of the primary source mid-level calibration standard. The acceptance criteria for the percent difference (%D) between the daily CCV

response and average response from the calibration curve is as follows. For the "Standard" TO-14 list compounds, the %D for 90% of the compounds must be ≤30%. For the "Non-standard and Polar" TO-14 list compounds the %D for 80% of the compounds must be ≤40%. (*See Appendix A* for the delineation between standard and non-standard TO-14 compounds.) If the CCV fails to meet the performance criteria then maintenance should be performed and the test repeated. If the system still fails the calibration check, a new 5-point calibration curve is performed.

Certain projects have different CCV acceptance criteria (e.g., ≤25% for 100% of compounds. A specific list of target analytes is requested when the CCV acceptance criteria are required differ than the ATL standard criteria noted above.

9.5 Laboratory Control Sample (LCS)

When required for specific projects, a mid-level spike using the second source standard is analyzed daily prior to sample analysis. The acceptance criteria are identical to those noted in Section 9.4. If the stated criteria are not met, the system is checked and the standard re-analyzed. In the event the criteria cannot be met, the instrument is re-calibrated.

9.6 Laboratory Blanks

A moist system blank then a dry laboratory blank is run after the CCV at the beginning of each day and at least once in every 24 hour shift. A laboratory blank is also analyzed in the event saturation-level concentrations are incurred to demonstrate that contamination does not exist in the chromatographic system. The acceptance criterion for laboratory blanks is a result less than the laboratory reporting limit (*Appendix A*).

9.7 Internal Standards

The internal standards retention times for the blanks, QC samples and samples must be within ±0.5 minutes (30 seconds) of the retention times in the continuing calibration check. In addition, the internal standard area must be within ±40% of the CCV's internal standard area for all blanks, QC samples, and samples. A warning limit of ±30% is used to investigate possible misinjection of the internal standard. When samples are analyzed on the same 24-hour clock as the initial calibration curve, the mid-point standard will be used for evaluation of internal standards.

If the internal standards for the blank do not pass the acceptance criteria, the system is inspected and the blank reanalyzed. Analyses do not continue until the blank meets the internal standard criteria.

If the internal standard acceptance criterion is not met, the sample must be analyzed again unless obvious matrix interference is documented. If the criterion is still not met, then the data is reported from the first analysis and the matrix effect narrated in the laboratory narrative included with the data report. Upon request, the data from the matrix effect confirmation analysis is provided to the client.

9.8 Surrogates

The acceptance limits for surrogate recoveries are 70 to 130%. If the surrogate recoveries for the blank are outside of these limits, the system is inspected and the blank reanalyzed. Analysis does not continue until the blank meets the surrogate recovery criteria. If the recovery limits are not met for sample analysis, the sample must be re-analyzed unless obvious matrix interference is documented. If the limits are still not met, then the data from the first analysis is reported and the out-of-limit surrogate recovery flagged.

9.9 Laboratory Duplicates

A duplicate sample analysis is performed on 10% of the samples. The relative percent difference (RPD) between the two analyses must be ≤ 25% for all compounds detected at greater than 5 times the reporting limit. If this limit is exceeded, the sample is re-analyzed a third time. If the limit is exceeded again, the cause is investigated and the system brought back to working order. If no problem is found on the system, the data is flagged to note the non-conforming event.

9.10 End Checks

Certain projects require that the CCV be repeated at the end of the analytical sequence. The acceptance criterion is ±30% of the expected value, except for certain projects that require recoveries of 15%. If a compound fails, the system is checked and the standard re-analyzed. If the 2nd analysis of the end check fails, the system is considered to be out of control. After the source of the problem is identified and necessary corrective action is performed, a subset of the affected day's samples are reanalyzed to determine at what point the analytical system began to fail. Reanalysis is performed where necessary.

9.11 Method Detection Limit Studies

Method Detection Limit (MDL) studies are analyzed as described in 40 CFR Pt. 136 App. B. The MDL determines the 99% confidence level for seven replicates of a low-level standard. The MDL is defined as 3.14 times the standard deviation of the seven replicates and must be less than

the reporting limit. Ability to accurately detect and quantitate target compounds at the reporting limit is verified by a running reporting limit-level standard each time a multi-point calibration curve is analyzed. See *Appendix A* for the TO-14 by SIM mode reporting limits.

10.0 CALCULATIONS

$$\text{Relative Response Factor (RRF)} = \frac{\text{Area of Compound}}{\text{Area of Int. Standard}} \times \frac{\text{Conc. Int. Standard (ppbv)}}{\text{Conc. of Compound (ppbv)}}$$

$$\text{Results Calculation (ppbv on-column)} = \frac{\text{Area of Compound in Sample}}{\text{Area of Int. Standard in Sample}} \times \frac{\text{Conc. Int. Standard (ppbv)}}{\text{ICAL RRF*}}$$

CCV: Continuing Calibration Verification

** The average RRF from the CCV curve is used as required by specific projects.*

ppbv in sample = ppbv on-column X dilution factor

Note. The dilution factor includes canister pressurization dilution and any subsequent dilution required to ensure all results are within the instrument calibration range.

11.0 SAMPLE ANALYSIS

11.1 Analytical Batch

The analytical batch is defined as the number of samples analyzed in one analytical day. The number of samples analyzed in one analytical day varies depending on the number of samples received for a particular project, the age of the samples upon receipt, the sample holding times (three days for Tedlar bag samples and 30* days for Summa canister samples), and the project-specific QC requirements. A maximum of 12 samples/analytical batch are analyzed when 12-hour tune-clocks are required.

**Some projects require a 14-day holding time for canister samples.*

Samples are logged into a work order as noted on the chain-of-custody. As many samples on one work order as physically possible are analyzed within one analytical batch. If samples extend to more than one analytical batch, appropriate QC will be reported.

11.2 Analytical Sequence

Initial 24-hour period	*Subsequent 24-hour period*
BFB Tune Check	BFB Tune Check
Initial Calibration	CCV
Reporting Limit Verification	LCS - if required by project
Independent Calibration Check	Laboratory Blank
Laboratory Blank	Samples
Samples	End Check - if required
End Check - if required	

The "Subsequent 24-hour" sequence is followed each 24 hour period (every 12 hours when specified by the project) that samples are analyzed, until the system is found to be out of calibration.

11.3 Sample Dilutions

To obtain analyte concentrations within the linear range of the detectors and to prevent contamination of the system, samples are screened prior to analysis on a GC/FID. The total VOC concentrations are approximated and used to determine the volume of sample loaded for TO-14 analysis. A 1:1 dilution involves loading 500 mL of the sample. Most dilutions are performed by loading a lesser sample volume. The dilution factor is obtained by dividing 500 mL by the sample volume loaded. This technique is also used for calibration. Alternatively, samples that contain over approximately 20,000 ppmv of target analytes are diluted by adding a measured aliquot of the sample to a Tedlar bag that has a metered volume of nitrogen as the diluent gas*. For this alternative dilution technique, up to 500 mL of the diluted sample is loaded. As noted in Section 5.0, the final dilution factor includes canister pressurization dilution as well.

** This concentration is based on a 1:1000 bag dilution, then a subsequent 1:500 dilution to an approximate on-column concentration of 40 ppbv for a 1 mL load.*

11.4 Qualitative Target Compound Identification

Compounds are qualitatively identified based on retention time and by comparing background subtracted sample spectra to the reference library spectra. An analyte is qualitatively identified when the following two criteria are met:

- the Relative Retention Time (RRT) for the analyte must be within ±0.06 RRT units of the RRT of the analyte in the daily continuing calibration check;
- ions present in the standard spectrum greater than 10% of the most abundant ion must be present. Also, the relative intensity of the ions

greater than 10%, must be ±20% of the intensity in the standard spectrum.

The ion intensity test is performed by the GC/MS software. Ions that do not meet the intensity criteria are flagged in the raw data. Failure to meet the intensity criteria may be indicative of matrix interference or low signal to noise (i.e., low concentration).

It may be necessary for the analyst to perform manual background subtraction of coeluting peaks to obtain a clean spectrum. The analyst must always use his/her discretion on any identification.

12.0 CORRECTIVE ACTION PROCEDURES

A request for corrective action (CAR) is initiated any time either the ATL SOPs or client-prescribed QC protocol are not followed, or in any other instance that sample results are adversely affected. The corrective action is documented in ATL's Corrective Action Procedures SOP #61.

13.0 DATA REVIEW

13.1 Initial Data Review

As the analytical sequence is run throughout the day, the data is reviewed by the bench chemist using the following eight steps:

13.1.1 Check for any project-specific requirements.
13.1.2 Verify holding time.
13.1.3 Verify the tuning criteria, CCV, LCS (when applicable), and end check (when applicable)
13.1.4 Verify method blank has no hits above detection limit.
13.1.5 Verify sample results.
- a) Verify internal standards, retention time, and surrogates recoveries are acceptable.
- b) Verify correct amount of sample analyzed.
- c) Verify the reasonableness of the automated peak integration and spectral verification.
- d) Verify result concentrations are within linear range of calibration curve (upper 50% for dilutions.)

13.1.6 Initial and date raw data/and or logbook entry to indicate that the data is acceptable.
13.1.7 Apply data appropriate data flags.
13.1.8 Describe unusual events on data review sheet.

Notes:

- *Preparation and review of laboratory narrative are carried out as explained in the SOP # 45.*
- *Compilation of data package by the analyst/scientist is carried out as described in the data review SOP #22.*

13.2 Secondary Data Review

The team leader or a QA-approved peer performs a secondary technical data review on 100% reports. This review follows all the steps mentioned in the initial data review (Section 13.1).

13.3 Tertiary (QA) Data Review

A thorough tertiary data review is performed by the QA department on a randomly chosen 10% of the final data packages. The QA review entails verification that project and QC requirements are met. Failure to meet QC and/or project requirements results in a corrective action report and documentation. Dilution factors, analyte retention times, peak integration areas, concentration calculations, unit conversions, and detection limits are also checked. Field and trip blanks are checked and trends are observed.

13.4 Quaternary Data Review

Some clients requests that 100% of their final data packages undergo a fourth technical review. The quaternary reviews in this case are performed by the team leader, QA-approved peer, or QA personnel.

14.0 INSTRUMENT MAINTENANCE

Instruments are monitored on a daily basis by the bench analyst for any potential failure. The analysis of blanks and control standards at the start of the day and as analysis continues helps to provide real time feedback to the analyst on the condition of the instruments. Routine maintenance includes:

14.1 Mass Spectrometers

- Daily check of vacuum ion gauge (Increase in ion count indicates a potential leak)
- Daily (every 24 hours) autotune check with BFB
- Cleaning of ion source on quarterly basis or as needed
- The oil level and quality is visually checked on a monthly basis to insure proper vacuum pump function, and oil is changed every 6 months.

14.2 Sample Introduction System

The mass flow controller used for sample introduction is sent for off-site calibration against NIST-certifiable source once every two years.

To ensure a clean sample introduction system, if necessary, the lines and trap are "steam-cleaned" by analyzing a humidified system blank. This takes place every day following standards (i.e., CCV) analysis. Humidified system blanks are also analyzed after saturation-level detections in samples.

14.3 Gas Chromatograph

Basic maintenance includes the following: (*Every 6 months or more frequently if needed)*

14.3.1 Clip 3 feet off the front end of the capillary column, and if necessary, the backend as well.

14.3.2 Replace the injection port liner. The liner is replaced by removing the inlet cap using a wrench and releasing the liner from the inlet body using a pair of tweezers. Care should be taken not to get fingerprints on any inside surface.

14.3.3 Once per week change septa on the GC and once per day change the septa on the valve syringe interface (injection port). Always use Supelco Thermogreen septa and take care not to leave fingerprints on any inside heated surface. Wear a pair of white cotton gloves or use tweezers to handle the septa. Lower the oven temperature to 40°C. Remove the inlet cap with a wrench, remove the old septa with a pair of tweezers and insert the new septa.

14.3.4 The column is replaced when chromatography peak shape or resolution degrades. Similarly, if the column bleed profile rises with age then the column needs replacing. Use new black graphite ferrules each time and clip off approximately 1" of column after inserting it through the ferrule. This will remove any graphite particles that may have scrapped off into the column. Tighten the column nut and ferrule finger tight and one-quarter turn with a wrench. Tightening any more only crushes the ferrule and may damage the column.

14.3.5 The bench analyst will document any routine or major maintenance in the bound instrument logbook assigned to each instrument. The date of the maintenance, what work was performed and analyst initials are included.

15.0 DELIVERABLES

Data reporting packages are prepared as described in SOP# 41 – Preparation of Hardcopy Analytical Reports Using ADT.

16.0 REFERENCES

EPA Method TO-14
Methods for Determination of Toxic Organic Compounds in Air, EPA Methods, Revision 1 June, 1988.

EPA Method TO-14A
Compendium of Methods for Determination of Toxic Organic Compounds in Air, EPA Methods, Second Edition, January 1997. *EPA/625/R-96/010b*

EPA Method TO-15
Compendium of Methods for Determination of Toxic Organic Compounds in Air, EPA Methods, Second Edition, January 1997. *EPA/625/R-96/010b*

SW-846 Method 8000B
Test Methods for Evaluating Solid Waste, SW-846, Third Edition, Final Update III, Revision 1, December, 1996.

Volatile Organic Analysis of Ambient Air in Canisters - *Draft Method*
USEPA Contract Laboratory Program, Revision VCAA01.0, December 1991

List of Appendices

Appendix A. Reporting Limits & Quantitation Ions
Table A-1 Reproting Limits & Quantitaion Ions for Standard TO-14 List
Table A-2 Reporting Limits and Quantitation Ions for Non-standard TO-14 List
Appendix B. Scott Specialty Gas Blend Certificates of Analysis
Appendix C. BFB Tune Criteria & Check Mix

Appendix A

Table A-1. Reporting Limits & Quantitation Ions for Standard TO-14 List

Compound	Reporting Limit (ppbv)	Quantitation Ion	Qualifier Ion
Freon 12	0.02	85	87
Freon 114	0.02	135	137
Chloromethane	0.02	50	52
Vinyl Chloride	0.010	62	64
Bromomethane	0.02	96	94
Chloroethane	0.02	64	66
Freon 11	0.02	101	103
1,1-Dicloroethene	0.010	61	96
Freon 113	0.02	151	153
Methylene Chloride	0.05	49	94
1,1-Dichloroethane	0.02	63	65
cis-1,2-Dichloroethene	0.02	61	96
Chloroform	0.02	83	85
1,1,1-Trichloroethane	0.02	97	99
Carbon Tetrachloride	0.02	119	117
Benzene	0.05	78	77
1,2-Dichloroethane	0.02	62	64
Trichloroethene	0.02	95	130
1,2-Dichloropropane	0.02	63	62
cis-1,2-Dichloropropene	0.02	75	77
Toluene	0.02	91	92
trans-1,2-Dichloropropene	0.02	75	77
1,1,2-Trichloroethane	0.02	97	99
Tetrachloroethene	0.02	166	129
1,2-Dibromoethane	0.02	107	109
Chlorobenzene	0.02	112	114
Ethyl Benzene	0.02	91	106
m,p-Xylene	0.02	91	106
o-Xylene	0.02	91	106
Styrene	0.02	104	78
1,1,2,2-Tetrachloroethane	0.02	83	85
1,3,5-Trimethylbenzene	0.02	105	120
1,2,4-Trimethylbenzene	0.02	105	120
1,3-Dichlorobenzene	0.02	146	148
1,4-Dichlorobenzene	0.02	146	148
1,2-Dichlorobenzene	0.02	146	148
1,2,4-Trichlorobenzene	0.02	180	182
Hexachlorobutadiene	0.05	225	223

Appendix A

Table A-2. Reporting Limits & Quantitation Ions for Non-Standard TO-14 List

Compound	Reporting Limit (ppbv)	Quantitation Ion	Qualifier Ion
1,3-Butadiene	0.10	54	39
Acetone	0.10	43	58
trans-1,2-Dichloroethene	0.10	61	96
Bromodichloromethane	0.10	83	85
Dibromochloromethane	0.10	129	127
Bromoform	0.10	173	171

Appendix B

Scott Specialty Gas Blend Certificates of Analysis

Appendix C

BFB Tune Criteria & Check Mix

4-BROMOFLUOROBENZENE KEY IONS AND ION ABUNDANCE CRITERIA

Mass	Ion Abundance Criteria
50	15 to 40% of mass 95
75	30 to 60% of mass 95
95	Base Peak, 100% Relative Abundance
96	5 to 9% of mass 95
173	< 2% of mass 174
174	> 50% of mass 95
175	5 to 9% of mass 174
176	> 95% but < 101% of mass 174
177	5 to 9% of mass 176

APPENDIX C-3

TETRA TECH NUS INC. STANDARD OPERATING PROCEDURES

TABLE OF CONTENTS

SECTION **PAGE**

1.0 PURPOSE **3**

2.0 SCOPE **3**

3.0 GLOSSARY **3**

4.0 RESPONSIBILITIES **3**

5.0 PROCEDURES **3**

5.1 SITE LOGBOOK 3
5.1.1 General 3
5.1.2 Photographs 4
5.2 FIELD NOTEBOOKS 4
5.3 SAMPLE FORMS 4
5.3.1 Sample Collection, Labeling, Shipment, Request for Analysis, and Field Test Results 5
5.3.2 Hydrogeological and Geotechnical Forms 6
5.3.3 Equipment Calibration and Maintenance Form 7
5.4 FIELD REPORTS 7
5.4.1 Daily Activities Report 7
5.4.2 Weekly Status Reports 7

6.0 ATTACHMENTS **8**

TABLE OF CONTENTS (Continued)

ATTACHMENTS (EXAMPLES) **PAGE**

A TYPICAL SITE LOGBOOK ENTRY 9
B-1 EXAMPLE GROUNDWATER SAMPLE LOG SHEET 10
B-2 EXAMPLE SURFACE WATER SAMPLE LOG SHEET 11
B-3 EXAMPLE SOIL/SEDIMENT SAMPLE LOG SHEET 12
B-4 CONTAINER SAMPLE LOG SHEET FORM 13
B-5 SAMPLE LABEL 14
B-6 CHAIN-OF-CUSTODY RECORD FORM 15
B-7 CHAIN-OF-CUSTODY SEAL 16
B-8 FIELD ANALYTICAL LOG SHEET GEOCHEMICAL PARAMETERS 17
C-1 EXAMPLE GROUNDWATER LEVEL MEASUREMENT SHEET 20
C-2 EXAMPLE PUMPING TEST DATA SHEET 21
C-3 PACKER TEST REPORT FORM 22
C-4 EXAMPLE BORING LOG 23
C-5 EXAMPLE OVERBURDEN MONITORING WELL SHEET 25
C-5A EXAMPLE OVERBURDEN MONITORING WELL SHEET (FLUSHMOUNT) 26
C-6 EXAMPLE CONFINING LAYER MONITORING WELL SHEET 27
C-7 EXAMPLE BEDROCK MONITORING WELL SHEET - OPEN HOLE WELL 28
C-8 EXAMPLE BEDROCK MONITORING WELL SHEET, WELL INSTALLED IN BEDROCK 29
C-9 EXAMPLE BEDROCK MONITORING WELL SHEET, WELL INSTALLED IN BEDROCK (FLUSHMOUNT) 30
C-10 EXAMPLE TEST PIT LOG 31
C-11 EXAMPLE CERTIFICATE OF CONFORMANCE 32
C-12 EXAMPLE MONITORING WELL DEVELOPMENT RECORD 33
D EXAMPLE EQUIPMENT CALIBRATION LOG 34
E EXAMPLE DAILY ACTIVITIES RECORD 35
F FIELD TRIP SUMMARY REPORT 36

1.0 PURPOSE

The purpose of this Standard Operating Procedure (SOP) is to identify and designate the field data record forms, logs and reports generally initiated and maintained for documenting Tetra Tech NUS field activities.

2.0 SCOPE

Documents presented within this procedure (or equivalents) shall be used for all Tetra Tech NUS field activities, as applicable. Other or additional documents may be required by specific client contracts or project planning documents.

3.0 GLOSSARY

None

4.0 RESPONSIBILITIES

Project Manager (PM) - The Project Manager is responsible for obtaining hardbound, controlled-distribution logbooks (from the appropriate source), as needed. In addition, the Project Manager is responsible for placing all field documentation used in site activities (i.e., records, field reports, sample data sheets, field notebooks, and the site logbook) in the project's central file upon the completion of field work.

Field Operations Leader (FOL) - The Field Operations Leader is responsible for ensuring that the site logbook, notebooks, and all appropriate and current forms and field reports illustrated in this guideline (and any additional forms required by the contract) are correctly used, accurately filled out, and completed in the required time-frame.

5.0 PROCEDURES

5.1 Site Logbook

5.1.1 General

The site logbook is a hard-bound, paginated, controlled-distribution record book in which all major onsite activities are documented. At a minimum, the following activities/events shall be recorded or referenced (daily) in the site logbook:

- All field personnel present
- Arrival/departure of site visitors
- Arrival/departure of equipment
- Start and/or completion of borehole, trench, monitoring well installation, etc.
- Daily onsite activities performed each day
- Sample pickup information
- Health and Safety issues (level of protection observed, etc.)
- Weather conditions

A site logbook shall be maintained for each project. The site logbook shall be initiated at the start of the first onsite activity (e.g., site visit or initial reconnaissance survey). Entries are to be made for every day that onsite activities take place which involve Tetra Tech NUS or subcontractor personnel. Upon completion of the fieldwork, the site logbook must become part of the project's central file.

The following information must be recorded on the cover of each site logbook:

- Project name
- Tetra Tech NUS project number
- Sequential book number
- Start date
- End date

Information recorded daily in the site logbook need not be duplicated in other field notebooks (see Section 5.2), but must summarize the contents of these other notebooks and refer to specific page locations in these notebooks for detailed information (where applicable). An example of a typical site logbook entry is shown in Attachment A.

If measurements are made at any location, the measurements and equipment used must either be recorded in the site logbook or reference must be made to the field notebook in which the measurements are recorded (see Attachment A).

All logbook, notebook, and log sheet entries shall be made in indelible ink (black pen is preferred). No erasures are permitted. If an incorrect entry is made, the data shall be crossed out with a single strike mark, and initialed and dated. At the completion of entries by any individual, the logbook pages used must be signed and dated. The site logbook must also be signed by the Field Operations Leader at the end of each day.

5.1.2 Photographs

When movies, slides, or photographs are taken of a site or any monitoring location, they must be numbered sequentially to correspond to logbook/notebook entries. The name of the photographer, date, time, site location, site description, and weather conditions must be entered in the logbook/notebook as the photographs are taken. A series entry may be used for rapid-sequence photographs. The photographer is not required to record the aperture settings and shutter speeds for photographs taken within the normal automatic exposure range. However, special lenses, films, filters, and other image-enhancement techniques must be noted in the logbook/notebook. If possible, such techniques shall be avoided, since they can adversely affect the accuracy of photographs. Chain-of-custody procedures depend upon the subject matter, type of film, and the processing it requires. Film used for aerial photography, confidential information, or criminal investigation require chain-of-custody procedures. Once processed, the slides of photographic prints shall be consecutively numbered and labeled according to the logbook/notebook descriptions. The site photographs and associated negatives must be docketed into the project's central file.

5.2 Field Notebooks

Key field team personnel may maintain a separate dedicated field notebook to document the pertinent field activities conducted directly under their supervision. For example, on large projects with multiple investigative sites and varying operating conditions, the Health and Safety Officer may elect to maintain a separate field notebook. Where several drill rigs are in operation simultaneously, each site geologist assigned to oversee a rig must maintain a field notebook.

5.3 Sample Forms

A summary of the forms illustrated in this procedure is shown as the listing of Attachments in the Table of Contents for this SOP. Forms may be altered or revised for project-specific needs contingent upon client

approval. Care must be taken to ensure that all essential information can be documented. Guidelines for completing these forms can be found in the related sampling SOP.

5.3.1 Sample Collection, Labeling, Shipment, Request for Analysis, and Field Test Results

5.3.1.1 Sample Log Sheet

Sample Log Sheets are used to record specified types of data while sampling. Attachments B-1 to B-4 are examples of Sample Log Sheets. The data recorded on these sheets are useful in describing the waste source and sample as well as pointing out any problems, difficulties, or irregularities encountered during sampling. A log sheet must be completed for each sample obtained, including field quality control (QC) samples.

5.3.1.2 Sample Label

A typical sample label is illustrated in Attachment B-5. Adhesive labels must be completed and applied to every sample container. Sample labels can usually be obtained from the appropriate Program source electronically generated in-house, or are supplied from the laboratory subcontractor.

5.3.1.3 Chain-of-Custody Record Form

The Chain-of-Custody (COC) Record is a multi-part form that is initiated as samples are acquired and accompanies a sample (or group of samples) as they are transferred from person to person. This form must be used for any samples collected for chemical or geotechnical analysis whether the analyses are performed on site or off site. One carbonless copy of the completed COC form is retained by the field crew, one copy is sent to the Project Manager, while the original is sent to the laboratory. The original (top, signed copy) of the COC form shall be placed inside a large Ziploc-type bag and taped inside the lid of the shipping cooler. If multiple coolers are sent but are included on one COC form, the COC form should be sent with the first cooler. The COC form should then state how many coolers are included with that shipment. An example of a Chain-of-Custody Record form is provided as Attachment B-6. Once the samples are received at the laboratory, the sample cooler and contents are checked and any problems are noted on the enclosed COC form (any discrepancies between the sample labels and COC form and any other problems that are noted are resolved through communication between the laboratory point-of-contact and the Tetra Tech NUS Project Manager). The COC form is signed and copied. The laboratory will retain the copy while the original becomes part of the samples' corresponding analytical data package.

5.3.1.4 Chain-of-Custody Seal

Attachment B-7 is an example of a custody seal. The Custody seal is an adhesive-backed label. It is part of a chain-of-custody process and is used to prevent tampering with samples after they have been collected in the field and sealed in coolers for transport to the laboratory. The COC seals are signed and dated by the samplers and affixed across the opening edges of each cooler containing environmental samples. COC seals may be available from the laboratory; these seals may also be purchased from a supplier.

5.3.1.5 Field Analytical Log Sheets for Geochemical Parameters

Field Analytical Log Sheets (Attachment B-8) are used to record geochemical and/or natural attenuation field test results. Attachments B-8 (3-page form) should be used when applicable.

5.3.2 Hydrogeological and Geotechnical Forms

5.3.2.1 Groundwater Level Measurement Sheet

A groundwater level measurement sheet, shown in Attachment C-1 must be filled out for each round of water level measurements made at a site.

5.3.2.2 Data Sheet for Pumping Test

During the performance of a pumping test (or an in-situ hydraulic conductivity test), a large amount of data must be recorded, often within a short time period. The pumping test data sheet (Attachment C-2) facilitates this task by standardizing the data collection format, and allowing the time interval for collection to be laid out in advance.

5.3.2.3 Packer Test Report Form

A packer test report form shown in Attachment C-3 must be completed for each well upon which a packer test is conducted.

5.3.2.4 Summary Log of Boring

During the progress of each boring, a log of the materials encountered, operation and driving of casing, and location of samples must be kept. The Summary Log of Boring, or Boring Log, (Attachment C-4) is used for this purpose and must be completed for each soil boring performed. In addition, if volatile organics are monitored on cores, samples, cuttings from the borehole, or breathing zone, (using a PID or FID), these results must be entered on the boring log at the appropriate depth. The "Remarks" column can be used to subsequently enter the laboratory sample number, the concentration of key analytical results, or other pertinent information. This feature allows direct comparison of contaminant concentrations with soil characteristics.

5.3.2.5 Monitoring Well Construction Details Form

A Monitoring Well Construction Details Form must be completed for every monitoring well, piezometer, or temporary well point installed. This form contains specific information on length and type of well riser pipe and screen, backfill, filter pack, annular seal and grout characteristics, and surface seal characteristics. This information is important in evaluating the performance of the monitoring well, particularly in areas where water levels show temporal variation, or where there are multiple (immiscible) phases of contaminants. Depending on the type of monitoring well (in overburden or bedrock), different forms are used (see Attachments C-5 through C-9). Similar forms are used for flush-mount well completions.

5.3.2.6 Test Pit Log

When a test pit or trench is constructed for investigative or sampling purposes, a Test Pit Log (Attachment C-10) must be filled out by the responsible field geologist or sampling technician.

5.3.2.7 Miscellaneous Monitoring Well Forms

Monitoring Well Materials Certificate of Conformance (Attachment C-11) should be used as the project directs to document all materials utilized during each monitoring well installation.

The Monitoring Well Development Record (Attachment C-12) should be used as the project directs to document all well development activities.

5.3.3 Equipment Calibration and Maintenance Form

The calibration or standardization of monitoring, measuring or test equipment is necessary to assure the proper operation and response of the equipment, to document the accuracy, precision or sensitivity of the measurement, and determine if correction should be applied to the readings. Some items of equipment require frequent calibration, others infrequent. Some are calibrated by the manufacturer, others by the user.

Each instrument requiring calibration has its own Equipment Calibration Log (Attachment D) which documents that the manufacturer's instructions were followed for calibration of the equipment, including frequency and type of standard or calibration device. An Equipment Calibration Log must be maintained for each electronic measuring device used in the field; entries must be made for each day the equipment is used.

5.4 Field Reports

The primary means of recording onsite activities is the site logbook. Other field notebooks may also be maintained. These logbooks and notebooks (and supporting forms) contain detailed information required for data interpretation or documentation, but are not easily useful for tracking and reporting of progress. Furthermore, the field logbook/notebooks remain onsite for extended periods of time and are thus not accessible for timely review by project management.

5.4.1 Daily Activities Report

To provide timely oversight of onsite contractors, Daily Activities Reports are completed and submitted as described below.

5.4.1.1 Description

The Daily Activities Report (DAR) documents the activities and progress for each day's field work. This report must be filled out on a daily basis whenever there are drilling, test pitting, well construction, or other related activities occurring which involve subcontractor personnel. These sheets summarize the work performed and form the basis of payment to subcontractors (Attachment E is an example of a Daily Activities Report).

5.4.1.2 Responsibilities

It is the responsibility of the rig geologist to complete the DAR and obtain the driller's signature acknowledging that the times and quantities of material entered are correct.

5.4.1.3 Submittal and Approval

At the end of the shift, the rig geologist must submit the Daily Activities Report to the Field Operations Leader (FOL) for review and filing. The Daily Activities Report is not a formal report and thus requires no further approval. The DAR reports are retained by the FOL for use in preparing the site logbook and in preparing weekly status reports for submission to the Project Manager.

5.4.2 Weekly Status Reports

To facilitate timely review by project management, photocopies of logbook/notebook entries may be made for internal use.

It should be noted that in addition to the summaries described herein, other summary reports may also be contractually required. Attachment F is an example of a Field Trip Summary Report form.

6.0 ATTACHMENTS

Attachment A	TYPICAL SITE LOGBOOK ENTRY
Attachment B-1	EXAMPLE GROUNDWATER SAMPLE LOG SHEET
Attachment B-2	EXAMPLE SURFACE WATER SAMPLE LOG SHEET
Attachment B-3	EXAMPLE SOIL/SEDIMENT SAMPLE LOG SHEET
Attachment B-4	CONTAINER SAMPLE LOG SHEET FORM
Attachment B-5	SAMPLE LABEL
Attachment B-6	CHAIN-OF-CUSTODY RECORD FORM
Attachment B-7	CHAIN-OF-CUSTODY SEAL
Attachment B-8	FIELD ANALYTICAL LOG SHEET
Attachment C-1	EXAMPLE GROUNDWATER LEVEL MEASUREMENT SHEET
Attachment C-2	EXAMPLE PUMPING TEST DATA SHEET
Attachment C-3	PACKER TEST REPORT FORM
Attachment C-4	EXAMPLE BORING LOG
Attachment C-5	EXAMPLE OVERBURDEN MONITORING WELL SHEET
Attachment C-5A	EXAMPLE OVERBURDEN MONITORING WELL SHEET (FLUSHMOUNT)
Attachment C-6	EXAMPLE CONFINING LAYER MONITORING WELL SHEET
Attachment C-7	EXAMPLE BEDROCK MONITORING WELL SHEET - OPEN HOLE WELL
Attachment C-8	EXAMPLE BEDROCK MONITORING WELL SHEET - WELL INSTALLED IN BEDROCK
Attachment C-9	EXAMPLE BEDROCK MONITORING WELL SHEET - WELL INSTALLED IN BEDROCK (FLUSHMOUNT)
Attachment C-10	EXAMPLE TEST PIT LOG
Attachment C-11	MONITORING WELL MATERIALS CERTIFICATE OF CONFORMANCE
Attachment C-12	MONITORING WELL DEVELOPMENT RECORD
Attachment D	EXAMPLE EQUIPMENT CALIBRATION LOG
Attachment E	EXAMPLE DAILY ACTIVITIES RECORD
Attachment F	FIELD TRIP SUMMARY REPORT

ATTACHMENT A
TYPICAL SITE LOGBOOK ENTRY

START TIME: _____ DATE: _____

SITE LEADER: _____
PERSONNEL:

TtNUS	DRILLER	SITE VISITORS
_____	_____	_____
_____	_____	_____
_____	_____	_____

WEATHER: Clear, 68°F, 2-5 mph wind from SE

ACTIVITIES:

1. Steam jenney and fire hoses were set up.
2. Drilling activities at well ____ resumes. Rig geologist was _____. See Geologist's Notebook, No. 1, page 29-30, for details of drilling activity. Sample No. 123-21-S4 collected; see sample logbook, page 42. Drilling activities completed at 11:50 and a 4-inch stainless steel well installed. See Geologist's Notebook, No. 1, page 31, and well construction details for well _____.
3. Drilling rig No. 2 steam-cleaned at decontamination pit. Then set up at location of well _____.
4. Well _____ drilled. Rig geologist was _____. See Geologist's Notebook, No. 2, page ____ for details of drilling activities. Sample numbers 123-22-S1, 123-22-S2, and 123-22-S3 collected; see sample logbook, pages 43, 44, and 45.
5. Well _____ was developed. Seven 55-gallon drums were filled in the flushing stage. The well was then pumped using the pitcher pump for 1 hour. At the end of the hour, water pumped from well was "sand free."
6. EPA remedial project manger arrives on site at 14:25 hours.
7. Large dump truck arrives at 14:45 and is steam-cleaned. Backhoe and dump truck set up over test pit _____.
8. Test pit _____ dug with cuttings placed in dump truck. Rig geologist was _____. See Geologist's Notebook, No. 1, page 32, for details of test pit activities. Test pit subsequently filled. No samples taken for chemical analysis. Due to shallow groundwater table, filling in of test pit ___ resulted in a very soft and wet area. A mound was developed and the area roped off.
9. Express carrier picked up samples (see Sample Logbook, pages 42 through 45) at 17:50 hours. Site activities terminated at 18:22 hours. All personnel off site, gate locked.

_____

Field Operations Leader

ATTACHMENT B-1

Tetra Tech NUS, Inc.

GROUNDWATER SAMPLE LOG SHEET

Page___ of ___

Project Site Name: _____
Project No.: _____

[] Domestic Well Data
[] Monitoring Well Data
[] Other Well Type: _____
[] QA Sample Type: _____

Sample ID No.: _____
Sample Location: _____
Sampled By: _____
C.O.C. No.: _____
Type of Sample:
[] Low Concentration
[] High Concentration

SAMPLING DATA

Date:	Color (Visual)	pH (S.U.)	S.C. (mS/cm)	Temp. (°C)	Turbidity (NTU)	DO (mg/l)	Salinity (%)	Other
Time:								
Method:								

PURGE DATA

Date:	Volume	pH	S.C.	Temp.	Turbidity	DO	Salinity	Other
Method:								
Monitor Reading (ppm):								
Well Casing Diameter & Material								
Type:								
Total Well Depth (TD):								
Static Water Level (WL):								
One Casing Volume(gal/L):								
Start Purge (hrs):								
End Purge (hrs):								
Total Purge Time (min):								
Total Vol. Purged (gal/L):								

SAMPLE COLLECTION INFORMATION

Analysis	Preservative	Container Requirements	Collected

OBSERVATIONS / NOTES

Circle If Applicable

MS/MSD	Duplicate ID No.:	Signature(s):

ATTACHMENT B-2

Tetra Tech NUS, Inc.

SURFACE WATER SAMPLE LOG SHEET

Page___ of ___

Project Site Name: _____
Project No.: _____

[] Stream
[] Spring
[] Pond
[] Lake
[] Other: _____
[] QA Sample Type: _____

Sample ID No.: _____
Sample Location: _____
Sampled By: _____
C.O.C. No.: _____

Type of Sample:
[] Low Concentration
[] High Concentration

SAMPLING DATA

Date: / Time:	Color (Visual)	pH (S.U.)	S.C. (mS/cm)	Temp. (°C)	Turbidity (NTU)	DO (mg/l)	Salinity (%)	Other
Depth: / Method:								

SAMPLE COLLECTION INFORMATION

Analysis	Preservative	Container Requirements	Collected

OBSERVATIONS / NOTES

MAP

Circle if Applicable

MS/MSD	Duplicate ID No.:	Signature(s):

ATTACHMENT B-3

Tetra Tech NUS, Inc.

SOIL & SEDIMENT SAMPLE LOG SHEET

Page___ of ___

Project Site Name: _____
Project No.: _____

[] Surface Soil
[] Subsurface Soil
[] Sediment
[] Other: _____
[] QA Sample Type: _____

Sample ID No.: _____
Sample Location: _____
Sampled By: _____
C.O.C. No.: _____

Type of Sample:
[] Low Concentration
[] High Concentration

GRAB SAMPLE DATA

Date:	Depth Interval	Color	Description (Sand, Silt, Clay, Moisture, etc.)
Time:			
Method:			
Monitor Reading (ppm):			

COMPOSITE SAMPLE DATA

Date:	Time	Depth Interval	Color	Description (Sand, Silt, Clay, Moisture, etc.)
Method:				
Monitor Readings (Range in ppm):				

SAMPLE COLLECTION INFORMATION

Analysis	Container Requirements	Collected	Other

OBSERVATIONS/NOTES

MAP

Circle if Applicable

MS/MSD	Duplicate ID No.:	Signature(s):

ATTACHMENT B-4

Tetra Tech NUS, Inc.

CONTAINER SAMPLE & INSPECTION SHEET

Page____ of ____

Project Site Name: _____
Project Number: _____
Site Identification: _____
Container Number(s): _____
Sample Type: 0 Grab
0 Composite

Sample ID No. _____
Sampled By: _____
C.O.C. No. _____
Concentration: 0 High
0 Medium
0 Low

CONTAINER SOURCE	CONTAINER DESCRIPTION
DRUM: 0 Bung Top 0 Lever Lock 0 Bolted Ring 0 Other _____	**COLOR:** _____ **CONDITION:** _____
TANK: 0 Plastic 0 Metal 0 Other _____	**MARKINGS:** _____ **VOL OF CONTENTS:** _____
OTHER: _____	**OTHER:** _____

CONTAINER DISPOSITION	CONTENTS DESCRIPTION
SAMPLED: _____ **OPENED BUT NOT SAMPLED:** Reason _____ **NOT OPENED:** Reason _____	**SINGLE PHASED:** _____ **MULTIPHASE :** Layer 1 / Layer 2 / Layer 3 Phase (Sol. or Liq.) _____ _____ _____ Color _____ _____ _____ Viscosity L, M or H L, M or H L, M orH % of Total Volume _____ _____ _____
MONITOR READING:	**SAMPLE and /or INSPECTION DATE & TIME:** _____HRS. **METHOD:**_____
SAMPLER(S) and /or INSPECTOR(S) SIGNATURE:	**ANALYSIS:**

ATTACHMENT B-5

Tetra Tech NUS, Inc. 661 Andersen Drive Pittsburgh, 15220 (412)921-7090	**Project:** **Site:** **Location:**	
Sample No:		**Matrix:**
Date:	**Time:**	**Preserve:**
Analysis:		
Sampled by:	**Laboratory:**	

ATTACHMENT B-6

TETRA TECH NUS, INC. CHAIN OF CUSTODY | NUMBER | PAGE ___ OF ___

PROJECT NO:	SITE NAME:	PROJECT MANAGER AND PHONE NUMBER	LABORATORY NAME AND CONTACT:
SAMPLERS (SIGNATURE)		FIELD OPERATIONS LEADER AND PHONE NUMBER	ADDRESS
		CARRIER/WAYBILL NUMBER	CITY, STATE

STANDARD TAT ☐
RUSH TAT ☐
☐ 24 hr. ☐ 48 hr. ☐ 72 hr. ☐ 7 day ☐ 14 day

CONTAINER TYPE PLASTIC (P) or GLASS (G)
PRESERVATIVE USED

DATE YEAR	TIME	SAMPLE ID	MATRIX	GRAB (G) COMP (C)	No. OF CONTAINERS	TYPE OF ANALYSIS								COMMENTS

1. RELINQUISHED BY	DATE	TIME	1. RECEIVED BY	DATE	TIME
2. RELINQUISHED BY	DATE	TIME	2. RECEIVED BY	DATE	TIME
3. RELINQUISHED BY	DATE	TIME	3. RECEIVED BY	DATE	TIME

COMMENTS

DISTRIBUTION: WHITE (ACCOMPANIES SAMPLE) YELLOW (FIELD COPY) PINK (FILE COPY)

3/99
FORM NO. TtNUS-001

ATTACHMENT B-7

CHAIN-OF-CUSTODY SEAL

CUSTODY SEAL	**CUSTODY SEAL**
Date	**Date**
Signature	**Signature**

ATTACHMENT B-8

FIELD ANALYTICAL LOG SHEET
GEOCHEMICAL PARAMETERS

Tetra Tech NUS, Inc.

Page __ of __

Project Site Name: _____ Sample ID No.: _____

Project No.: _____ Sample Location: _____

Sampled By: _____ Duplicate: ☐

Field Analyst: _____ Blank: ☐

Field Form Checked as per QA/QC Checklist (initials): ☐

SAMPLING DATA

Date:	Color	pH	S.C.	Temp.	Turbidity	DO	Salinity	Other
Time:	(Visual)	(S.U.)	(mS/cm)	(°C)	(NTU)	(mg/l)	(%)	
Method:								

SAMPLE COLLECTION/ANALYSIS INFORMATION

ORP (Eh) (+/- mv): _____ Electrode Make & Model: _____

Reference Electrode (circle one): Silver-Silver Chloride / Calomel / Hydrogen

Dissolved Oxygen:

Equipment: HACH Digital Titrator OX-DT CHEMetrics (Range: _____mg/L) Analysis Time: _____

Range Used:	Range	Sample Vol.	Cartridge	Multiplier
☐	1-5 mg/L	200 ml	0.200 N	0.01
☐	2-10 mg/L	100 ml	0.200 N	0.02

Titration Count	Multiplier		Concentration
_____	x 0.01	=	mg/L
_____	x 0.02	=	mg/L

CHEMetrics: _____mg/L

Notes:

Alkalinity: Analysis Time: _____

Equipment: HACH Digital Titrator AL-DT CHEMetrics (Range: _____mg/L) Filtered: ☐

Range Used:	Range	Sample Vol.	Cartridge	Multiplier	Titration Count	Multiplier		Concentration
☐	10-40 mg/L	100 ml	0.1600 N	0.1	_____ & _____	x 0.1	=	mg/L
☐	40-160 mg/L	25 ml	0.1600 N	0.4	_____ & _____	x 0.4	=	mg/L
☐	100-400 mg/L	100 ml	1.600 N	1.0	_____ & _____	x 1.0	=	mg/L
☐	200-800 mg/L	50 ml	1.600 N	2.0	_____ & _____	x 2.0	=	mg/L
☐	500-2000 mg/L	20 ml	1.600 N	5.0	_____ & _____	x 5.0	=	mg/L
☐	1000-4000 mg/L	10 ml	1.600 N	10.0	_____ & _____	x 10.0	=	mg/L

Parameter:	Hydroxide	Carbonate	Bicarbonate
Relationship:			

CHEMetrics: _____mg/L

Notes:

Standard Additions: ☐ Titrant Molarity: _____ Digits Required: 1st.: _____ 2nd.: _____ 3rd.: _____

Carbon Dioxide:

Equipment: HACH Digital Titrator CA-DT CHEMetrics (Range: _____mg/L) Analysis Time: _____

Range Used:	Range	Sample Vol.	Cartridge	Multiplier
☐	10-50 mg/L	200 ml	0.3636 N	0.1
☐	20-100 mg/L	100 ml	0.3636 N	0.2
☐	100-400 mg/L	200 ml	3.636 N	1.0
☐	200-1000 mg/L	100 ml	3.636 N	2.0

Titration Count			Concentration
_____	x 0.1	=	mg/L
_____	x 0.2	=	mg/L
_____	x 1.0	=	mg/L
_____	x 2.0	=	mg/L

CHEMetrics: _____mg/L

Notes:

Standard Additions: ☐ Titrant Molarity: _____ Digits Required: 1st.: _____ 2nd.: _____ 3rd.: _____

ATTACHMENT B-8 (Continued)

Tetra Tech NUS, Inc.

FIELD ANALYTICAL LOG SHEET
GEOCHEMICAL PARAMETERS

Page __ of __

Project Site Name: _____ Sample ID No.: _____

Project No.: _____ Sample Location: _____

Sampled By: _____ Duplicate: ☐

Field Analyst: _____ Blank: ☐

Field Form Checked as per QA/QC Checklist (initials): ☐

SAMPLE COLLECTION/ANALYSIS INFORMATION:

Sulfide (S^{2-}):

Equipment: DR-700 DR-8 __ HS-WR Color Wheel Other: _____ Analysis Time: _____

Program/Module: 610nm 93

Concentration: _____ mg/L Filtered: ☐

Notes: _____

Sulfate (SO_4^{2-}):

Equipment: DR-700 DR-8 __ Other: _____ Analysis Time: _____

Program/Module: 91

Concentration: _____ mg/L Filtered: ☐

Standard Solution: ☐ Results: _____

Standard Additions: ☐ Digits Required: 0.1ml:_____ 0.2ml:_____ 0.8ml:_____

Notes: _____

Nitrite (NO_2^--N): Analysis Time: _____

Equipment: DR-700 DR-8 __ Other: _____ Filtered: ☐

Program/Module: 60

Concentration: _____ mg/L Reagent Blank Correction: ☐

Standard Solution: ☐ Results: ☐

Notes: _____

Nitrate (NO_3^--N): Analysis Time: _____

Equipment: DR-700 DR-8 __ Other: _____ Filtered: ☐

Program/Module: 55

Concentration: _____ mg/L

Nitrite Interference Treatment: ☐

Standard Solution: ☐ Results: _____ Reagent Blank Correction: ☐

Standard Additions: ☐ Digits Required: 0.1ml:_____ 0.2ml:_____ 0.3ml:_____

Notes: _____

ATTACHMENT B-8 (Continued)

Tetra Tech NUS, Inc.

FIELD ANALYTICAL LOG SHEET
GEOCHEMICAL PARAMETERS

Page __ of __

Project Site Name: _____ Sample ID No.: _____

Project No.: _____ Sample Location: _____

Sampled By: _____ Duplicate: ☐

Field Analyst: _____ Blank: ☐

Field Form Checked as per QA/QC Checklist (initials): _____

SAMPLE COLLECTION/ANALYSIS INFORMATION:

Manganese (Mn^{2+}):

Equipment: DR-700 DR-8 _ _ HACH MN-5 Other: _____ Analysis Time: _____

Program/Module: 525nm 41

Concentration: _____ mg/L Filtered: ☐

Digestion: ☐

Standard Solution: ☐ Results: _____ Reagent Blank Correction: ☐

Standard Additions: ☐ Digits Required: 0.1ml:_____ 0.2ml:_____ 0.3ml:_____

Notes: _____

Ferrous Iron (Fe^{2+}):

Equipment: DR-700 DR-8 _ _ IR-18C Color Wheel Other: _____ Analysis Time: _____

Program/Module: 500nm 33

Concentration: _____ mg/L Filtered: ☐

Notes: _____

Hydrogen Sulfide (H_2S):

Equipment: HS-C Other: _____ Analysis Time: _____

Concentration: _____ mg/L Exceeded 5.0 mg/L range on color chart: ☐

Notes: _____

QA/QC Checklist:

All data fields have been completed as necessary: ☐

Correct measurement units are cited in the SAMPLING DATA block: ☐

Values cited in the SAMPLING DATA block are consistent with the Groundwater Sample Log Sheet: ☐

Mulitplication is correct for each *Multiplier* table: ☐

Final calulated concentration is within the appropriate *Range Used* block: ☐

Alkalinity *Relationship* is determined appropriatly as per manufacturer (HACH) instructions: ☐

QA/QC sample (e.g., Std. Additions, etc.) frequency is appropriate as per the project planning documents: ☐

Nitrite Interference treatment was used for Nitrate test if Nitrite was detected: ☐

Title block on each page of form is initialized by person who performed this QA/QC Checklist: ☐

ATTACHMENT C-1
EXAMPLE GROUNDWATER LEVEL MEASUREMENT SHEET

Tetra Tech NUS, Inc.

GROUNDWATER LEVEL MEASUREMENT SHEET

Project Name: _____ **Project No.:** _____
Location: _____ **Personnel:** _____
Weather Conditions: _____ **Measuring Device:** _____
Tidally Influenced: Yes ___ No ___ **Remarks:** _____

Well or Piezometer Number	Date	Time	Elevation of Reference Point (feet)*	Total Well Depth (feet)*	Water Level Indicator Reading (feet)*	Thickness of Free Product (feet)*	Groundwater Elevation (feet)*	Comments

* All measurements to the nearest 0.01 foot

Page ___ of ___

ATTACHMENT C-2
EXAMPLE PUMPING TEST DATA SHEET

Tetra Tech NUS, Inc.

PUMPING TEST DATA SHEET

PROJECT NAME: _____ PUMPING WELL NUMBER: _____
PROJECT NUMBER: _____ MEASURED WELL NUMBER: _____

[ ] PUMPING TEST [ ] STEP DRAW DOWN TEST

DATE(s): MONITORING POINT:
MEASUREMENT METHOD: DEPTH CORRECTION (ft):
TEST NUMBER: PUMP SETTING (Ft. below monitoring point):
STATIC WATER LEVEL (ft): DISTANCE FROM PUMPING WELL (ft):
PERSONNEL:
REMARKS:

MILITARY TIME	ELAPSED TIME SINCE PUMP START OR STOP (Min.)	WATER LEVEL (Ft.)	CORRECTION (Ft.)	DRAW DOWN OR RECOVERY (Ft.)	PUMPING RATE (GPM)	FLOW METER READING (Gals.)	REMARKS

NOTE: All measurements to nearest 0.01 foot measured from top of well riser pipe unless otherwise noted.

ATTACHMENT C-3

ATTACHMENT C-3

PACKER TEST REPORT FORM

PROJECT: _____ PROJECT NO.: _____ TEST NO: _____ PAGE ____ OF ____

BORING NO.: _____ CASING DEPTH: _____ CONTRACTOR: _____ STATIC WATER LEVEL _____

TEST INTERVAL: _____ BY: _____ CHECKED: _____ PACKER PRESSURE _____

Flow Test					Calculated Results							
Pressure, P (psi)	Elapsed Time (min)	Flow Reading	Δ Flow, ΔQ (ft³)	Δ Flow, ΔQ (gal)	Flow Rate Q (gal/min)	H_1* (ft)	Hp(ft) = 2.31·(psi)	H_2* (ft)	H = Hp + (h1 or H2)	Cp	K (ft/yr) = Cp·Q/H	K (cm/sec) = 9.87 x 10⁻⁶ K (ft/yr)

TEST CONFIGURATION

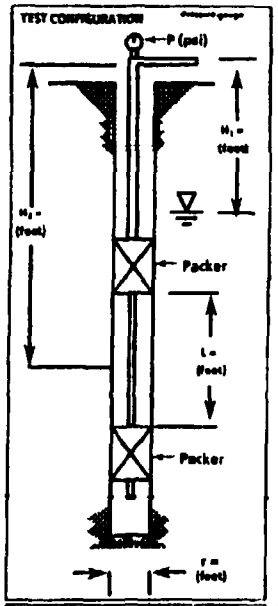

Length of test section in feet, L	Cp (casing flat bare)			
	7.5" (1.5")	6.5" (1.0/2")	5.5" (0.3")	NQ (1")
1	31,000	26,400	24,000	22,300
2	19,400	16,100	16,000	15,100
5	8,000	7,200	6,800	6,400
8	6,000	5,400	5,100	5,000
10	5,200	4,400	4,200	4,000
15	4,100	3,500	3,200	3,000
20	3,300	2,900	2,600	2,500

CP = (1/(2 π L)) ln(L/r) (70,315 S)
7.48 Gallons = 1 Ft³
1 psi = 2.31 ft head

* H_1 is used when the test length is below the water table.
H_2 is used when the test length is above the water table.

Remarks: _____

ATTACHMENT C-4

Tetra Tech NUS, Inc.

BORING LOG

Page ___ of ___

PROJECT NAME: _____ BORING No.: _____
PROJECT NUMBER: _____ DATE: _____
DRILLING COMPANY: _____ GEOLOGIST: _____
DRILLING RIG: _____ DRILLER: _____

Sample No. and Type or RQD	Depth (Ft.) or Run No.	Blows / 6" or RQD (%)	Sample Recovery / Sample Length	Lithology Change (Depth/Ft.) or Screened Interval	MATERIAL DESCRIPTION: Soil Density/ Consistency or Rock Hardness	MATERIAL DESCRIPTION: Color	MATERIAL DESCRIPTION: Material Classification	USCS *	Remarks	PID/FID Reading (ppm): Sample	PID/FID Reading (ppm): Sampler BZ	PID/FID Reading (ppm): Borehole**	PID/FID Reading (ppm): Driller BZ**

* When rock coring, enter rock brokeness.

** Include monitor reading in 6 foot intervals @ borehole. Increase reading frequency if elevated reponse read.

Remarks: _____

Drilling Area Background (ppm): _____

Converted to Well: Yes _____ No _____ Well I.D. #: _____

ATTACHMENT C4 (Continued)

LEGEND
SOIL TERMS

UNIFIED SOIL CLASSIFICATION (USCS)

COARSE-GRAINED SOILS
More Than Half of Material is LARGER Than No. 200 Sieve Size

FIELD IDENTIFICATION PROCEDURES (Excluding Particles Larger Than 3 Inches and Basing Fractions on Estimated Weights)			GROUP SYMBOL	TYPICAL NAMES
GRAVELS (50%(+)>1/4"⊙	CLEAN GRAVELS (Low % Fines)	Wide range in grain size and substantial amounts of all intermediate particle sizes.	GW	Well graded gravels, gravel-sand mixtures, little or no fines.
		Predominantly one size or a range of sizes with some intermediate sizes missing.	GP	Poorly graded gravels, gravel-sand mixtures, little or no fines.
	GRAVELS W/FINES (High % Fines)	Non-plastic fines (for identification procedures, see ML)	GM	Silty gravels, poorly graded gravel-sand-silt mixtures.
		Plastic fines (for identification procedures, see CL)	GC	Clayey gravels, poorly graded gravel-sand-clay mixtures.
SANDS 50%(-)<1/4"⊙	CLEAN SANDS (Low % Fines)	Wide range in grain size and substantial amounts of all intermediate particle sizes.	SW	Well graded sand, gravelly sands, little or no fines.
		Predominantly one size or a range of sizes with some intermediate sizes missing.	SP	Poorly graded sands, gravelly sands, little or no fines.
	SANDS W/FINES (High % Fines)	Non-plastic fines (for identification procedures, see MCL)	SM	Silty sands, poorly graded sand-silt mixtures.
		Plastic fines (for identification procedures, see CL)	SC	Clayey sands, poorly graded sand-clay mixtures.

FINE-GRAINED SOILS
More Than Half of Material is SMALLER Than No. 200 Sieve Size

FIELD IDENTIFICATION PROCEDURES (Excluding Particles Larger Than 3 Inches and Basing Fractions on Estimated Weights)	Identification Procedures on Fraction Smaller than No. 40 Sieve Size: DAY STRENGTH (Crushing Characteristics)	DILATANCY (Reaction to Shaking)	TOUGHNESS (Consistency Near Plastic Limit)	GROUP SYMBOL	TYPICAL NAMES
SILTS AND CLAYS Liquid Limit <50	None to Slight	Quick to Slow	None	ML	Inorganic silts and very fine sands, rock flour, silty or clayey fine sands with slight plasticity.
	Medium to High	None to Very Slow	Medium	CL	Inorganic clays of low to medium plasticity, gravelly clays, sandy clays, silty clays, lean clays.
	Slight to Medium	Slow	Slight	OL	Organic silts and organic silt-clays of low plasticity.
SILTS AND CLAYS Liquid Limit >50	Slight to Medium	Slow to None	Slight to Medium	MH	Inorganic silts, micaceous or diatomaceous fine sandy or silty soils, elastic silts.
	High to Very High	None	High	CH	Inorganic clays of high plasticity, fat clays.
	Medium to High	None to Very Slow	Slight to Medium	OH	Organic clays of medium to high plasticity.
HIGHLY ORGANIC SOILS	Readily identified by color, odor, spongy feel and frequently by fibrous texture.			Pt	Peat and other organic soils

Boundary classifications: Soils possessing characteristics of two groups are designated by combining group symbols. For example, GW-GC, well graded gravel-sand mixture with clay binder.
All sieve sizes on this chart are U.S. Standard.

DENSITY OF GRANULAR SOILS

DESIGNATION	STANDARD PENETRATION RESISTANCE-BLOWS/FOOT
Very Loose	0-4
Loose	5-10
Medium Loose	11-30
Dense	31-50
Very Dense	Over 50

CONSISTENCY OF COHESIVE SOILS

CONSISTENCY	UNC COMPRESSIVE STRENGTH (TONS/SQ. FT.)	STANDARD PENETRATION RESISTANCE-BLOWS/FOOT	FIELD IDENTIFICATION METHODS
Very Soft	Less than 0.25	0 to 2	Easily penetrated several inches by fist
Soft	0.25 to 0.50	2 to 4	Easily penetrated several inches by thumb.
Medium Stiff	0.50 to 1.0	4 to 8	Can be penetrated several inches by thumb.
Stiff	1.0 to 2.0	8 to 15	Readily indented by thumb.
Very Stiff	2.0 to 4.0	15 to 30	Readily indented by thumbnail.
Hard	More than 4.0	Over 30	Indented with difficulty by thumbnail.

ROCK TERMS

ROCK HARDNESS (FROM CORE SAMPLES)			ROCK BROKENESS		
Descriptive Terms	Screwdriver or Knife Effects	Hammer Effects	Descriptive Terms	Abbreviation	Spacing
Soft	Easily Gouged	Crushes when pressed with hammer	Very Broken	(V. Br.)	0-2"
Medium Soft	Can be Gouged	Breaks (one blow); crumbly edges	Broken	(Br.)	2"-1'
Medium Hard	Can be scratched	Breaks (one blow); sharp edges	Blocky	(Bl.)	1'-3"
Hard	Cannot be scratched	Breaks conchoidally (several blows); sharp edges	Massive	(M.)	3'-10'

LEGEND:

SOIL SAMPLES - TYPES

S-2" Split-Barrel Sample

ST-3" O.D. Undisturbed Sample
O - Other Samples, Specify in Remarks

ROCK SAMPLES - TYPES

X-NX (Conventional) Core (~2-1/8" O.D.)

Q-NQ (Wireline) Core (~1-7/8" O.D.)
Z - Other Core Sizes, Specify in Remarks

WATER LEVELS

12/18
▽ 12.6' Initial Level w/Date & Depth

12/18

ATTACHMENT C-5
EXAMPLE OVERBURDEN MONITORING WELL SHEET

BORING NO.: _____

OVERBURDEN
MONITORING WELL SHEET

PROJECT _____ LOCATION _____
PROJECT NO. _____ BORING _____
ELEVATION _____ DATE _____
FIELD GEOLOGIST _____

DRILLER _____
DRILLING METHOD _____
DEVELOPMENT METHOD _____

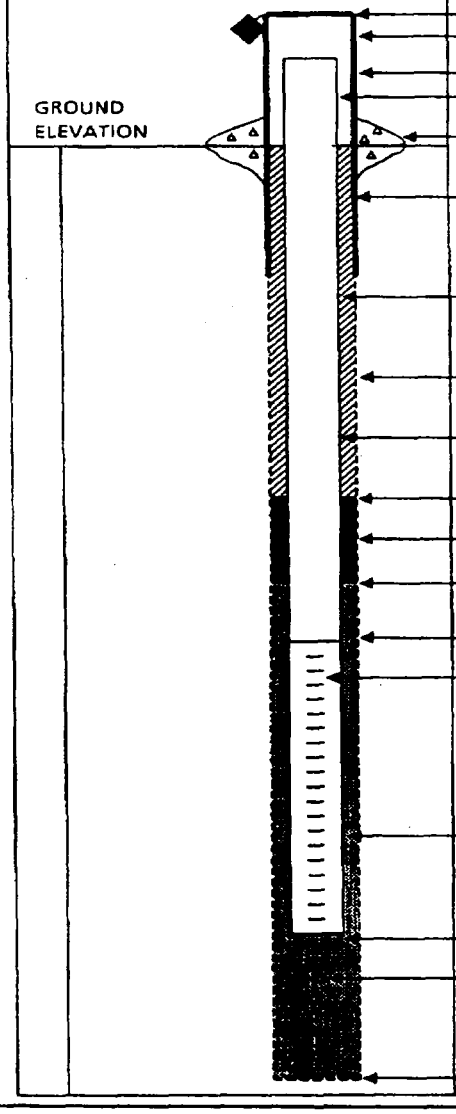

ELEVATION OF TOP OF SURFACE CASING : _____
ELEVATION OF TOP OF RISER PIPE: _____

STICK - UP TOP OF SURFACE CASING: _____
STICK - UP RISER PIPE : _____

TYPE OF SURFACE SEAL: _____

I.D. OF SURFACE CASING: _____
TYPE OF SURFACE CASING: _____

RISER PIPE I.D. _____
TYPE OF RISER PIPE: _____

BOREHOLE DIAMETER: _____

TYPE OF BACKFILL: _____

ELEVATION / DEPTH TOP OF SEAL: _____ / _____

TYPE OF SEAL: _____

DEPTH TOP OF SAND PACK: _____

ELEVATION / DEPTH TOP OF SCREEN: _____ / _____

TYPE OF SCREEN: _____

SLOT SIZE x LENGTH: _____

I.D. OF SCREEN: _____

TYPE OF SAND PACK: _____

ELEVATION / DEPTH BOTTOM OF SCREEN: _____ / _____

ELEVATION / DEPTH BOTTOM OF SAND PACK: _____ / _____

TYPE OF BACKFILL BELOW OBSERVATION WELL: _____

ELEVATION / DEPTH OF HOLE: _____ / _____

ATTACHMENT C-5A
EXAMPLE OVERBURDEN MONITORING WELL SHEET (FLUSHMOUNT)

BORING NO.: _____

MONITORING WELL SHEET

PROJECT _____ LOCATION _____
PROJECT NO. _____ BORING _____
ELEVATION _____ DATE _____
FIELD GEOLOGIST _____

DRILLER _____
DRILLING METHOD _____
DEVELOPMENT METHOD _____

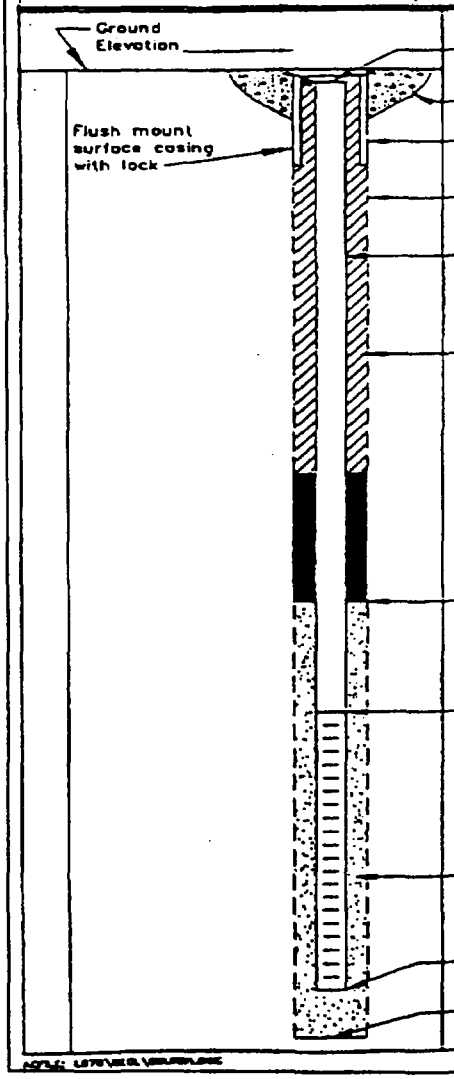

ELEVATION TOP OF RISER: _____

TYPE OF SURFACE SEAL: _____

TYPE OF PROTECTIVE CASING: _____

I.D. OF PROTECTIVE CASING: _____

DIAMETER OF HOLE: _____

TYPE OF RISER PIPE: _____

RISER PIPE I.D.: _____

TYPE OF BACKFILL/SEAL: _____

_____

DEPTH/ELEVATION TOP OF SAND: _____ / _____

DEPTH/ELEVATION TOP OF SCREEN: _____ / _____

TYPE OF SCREEN: _____

SLOT SIZE x LENGTH: _____

TYPE OF SAND PACK: _____

DIAMETER OF HOLE IN BEDROCK: _____

DEPTH/ELEVATION BOTTOM OF SCREEN: _____ / _____

DEPTH/ELEVATION BOTTOM OF SAND: _____ / _____

DEPTH/ELEVATION BOTTOM OF HOLE: _____ / _____

BACKFILL MATERIAL BELOW SAND: _____

NOTE: [illegible]

ATTACHMENT C-6
EXAMPLE CONFINING LAYER MONITORING WELL SHEET

BORING NO.: _____

CONFINING LAYER
MONITORING WELL SHEET

PROJECT _____ LOCATION _____ DRILLER _____
PROJECT NO. _____ BORING _____ DRILLING METHOD _____
ELEVATION _____ DATE _____ DEVELOPMENT METHOD _____
FIELD GEOLOGIST _____

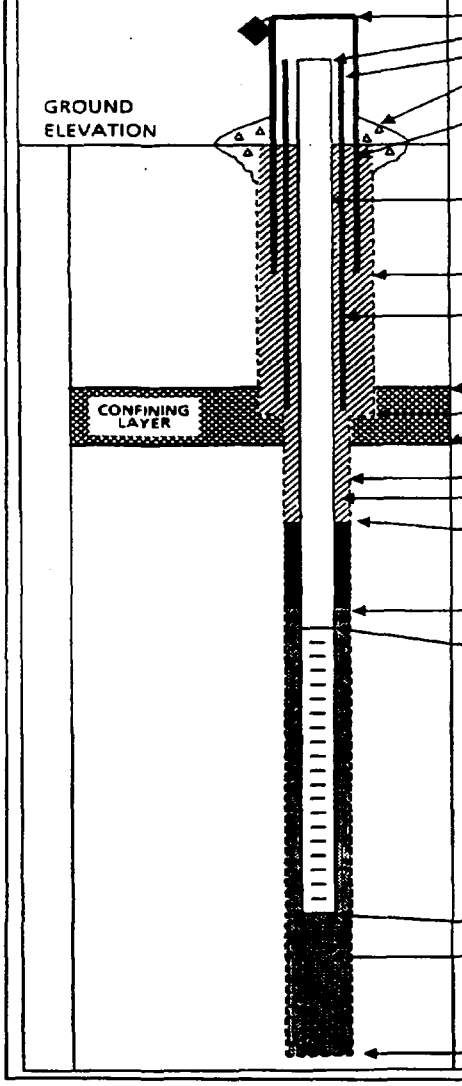

ELEVATION OF TOP OF SURFACE CASING : _____
ELEVATION OF TOP OF RISER PIPE: _____
ELEVATION TOP OF PERM. CASING: _____
TYPE OF SURFACE SEAL: _____

I.D. OF SURFACE CASING: _____
TYPE OF SURFACE CASING: _____

RISER PIPE I.D. _____
TYPE OF RISER PIPE: _____

BOREHOLE DIAMETER: _____

PERM. CASING I.D. _____
TYPE OF CASING & BACKFILL: _____

ELEVATION / DEPTH TOP CONFINING LAYER: _____
ELEVATION / DEPTH BOTTOM OF CASING: _____
ELEVATION / DEPTH BOT. CONFINING LAYER: _____

BOREHOLE DIA. BELOW CASING: _____
TYPE OF BACKFILL: _____

ELEVATION / DEPTH TOP OF SEAL: _____
TYPE OF SEAL: _____

DEPTH TOP OF SAND PACK: _____

ELEVATION/DEPTH TOP OF SCREEN: _____
TYPE OF SCREEN: _____

TYPE OF SAND PACK: _____

ELEVATION / DEPTH BOTTOM OF SCREEN: _____

ELEVATION / DEPTH BOTTOM OF SAND PACK: _____
TYPE OF BACKFILL BELOW OBSERVATION WELL: _____

ELEVATION / DEPTH OF HOLE: _____

ATTACHMENT C-7
EXAMPLE BEDROCK MONITORING WELL SHEET - OPEN HOLE WELL

BORING NO.: _____

BEDROCK MONITORING WELL SHEET
OPEN HOLE WELL

PROJECT _____ LOCATION _____
PROJECT NO. _____ BORING _____
ELEVATION _____ DATE _____
FIELD GEOLOGIST _____

DRILLER _____
DRILLING METHOD _____
DEVELOPMENT METHOD _____

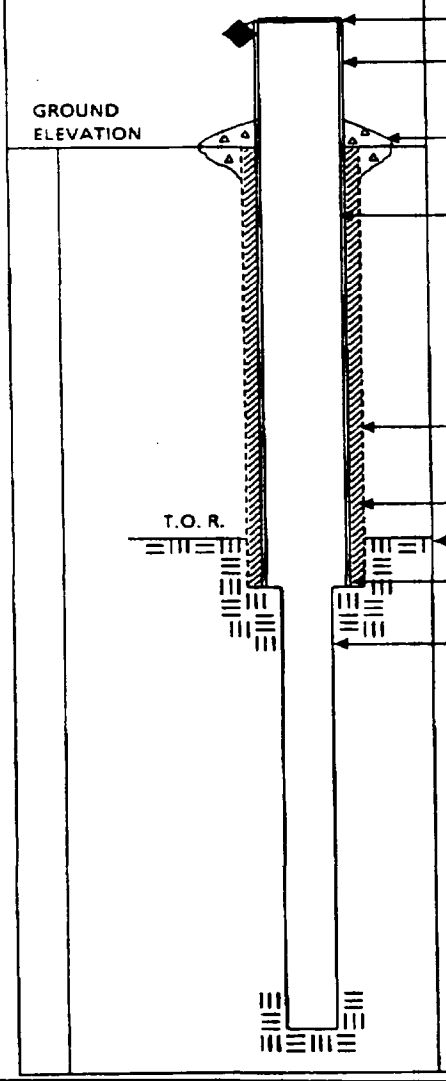

ELEVATION OF TOP OF CASING: _____

STICK UP OF CASING ABOVE GROUND SURFACE: _____

TYPE OF SURFACE SEAL: _____

I.D. OF CASING: _____
TYPE OF CASING: _____

TEMP. / PERM.: _____

DIAMETER OF HOLE: _____

TYPE OF CASING SEAL: _____

DEPTH TO TOP OF ROCK: _____

DEPTH TO BOTTOM CASING: _____

DIAMETER OF HOLE IN BEDROCK: _____

DESCRIBE IF CORE / REAMED WITH BIT:

_____

DESCRIBE JOINTS IN BEDROCK AND DEPTH:

_____

ELEVATION / DEPTH OF HOLE: _____ / _____

ATTACHMENT C-8
EXAMPLE BEDROCK MONITORING WELL SHEET - WELL INSTALLED IN BEDROCK

BORING NO.: _____

BEDROCK
MONITORING WELL SHEET
WELL INSTALLED IN BEDROCK

PROJECT _____ LOCATION _____
PROJECT NO. _____ BORING _____
ELEVATION _____ DATE _____
FIELD GEOLOGIST _____

DRILLER _____
DRILLING METHOD _____
DEVELOPMENT METHOD _____

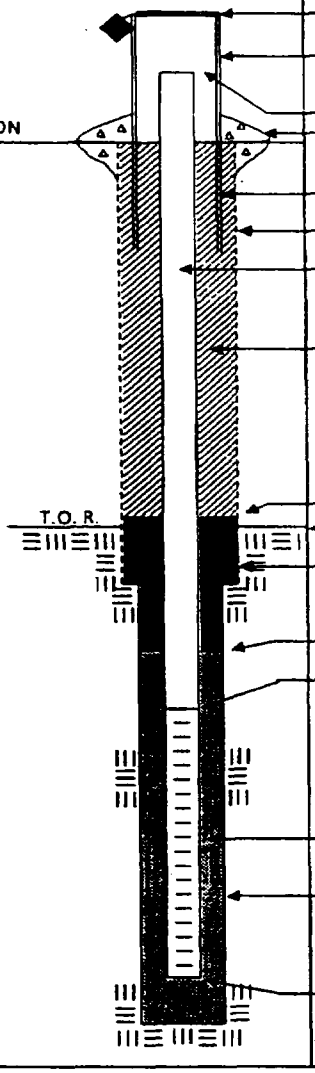

ELEVATION OF TOP OF SURFACE CASING: _____

STICK UP OF CASING ABOVE GROUND SURFACE: _____

ELEVATION TOP OF RISER: _____

TYPE OF SURFACE SEAL: _____

I.D. OF SURFACE CASING: _____

DIAMETER OF HOLE: _____

RISER PIPE I.D.: _____

TYPE OF RISER PIPE: _____

TYPE OF BACKFILL: _____

ELEVATION / DEPTH TOP OF SEAL: ____/____

ELEVATION / DEPTH TOP OF BEDROCK: ____/____

TYPE OF SEAL: _____

ELEVATION / DEPTH TOP OF SAND: ____/____

ELEVATION / DEPTH TOP OF SCREEN: ____/____

TYPE OF SCREEN: _____

SLOT SIZE x LENGTH: _____

I.D. SCREEN: _____

TYPE OF SAND PACK: _____

DIAMETER OF HOLE IN BEDROCK:

CORE / REAM: _____

ELEVATION / DEPTH BOTTOM SCREEN: ____/____

ELEVATION / DEPTH BOTTOM OF HOLE: ____/____

ATTACHMENT C-9
EXAMPLE BEDROCK MONITORING WELL SHEET
WELL INSTALLED IN BEDROCK (FLUSHMOUNT)

BORING NO.: _____

BEDROCK
MONITORING WELL SHEET
WELL INSTALLED IN BEDROCK

PROJECT: _____ LOCATION: _____ DRILLER: _____
PROJECT NO.: _____ BORING: _____ DRILLING METHOD: _____
ELEVATION: _____ DATE: _____ DEVELOPMENT METHOD: _____
FIELD GEOLOGIST: _____

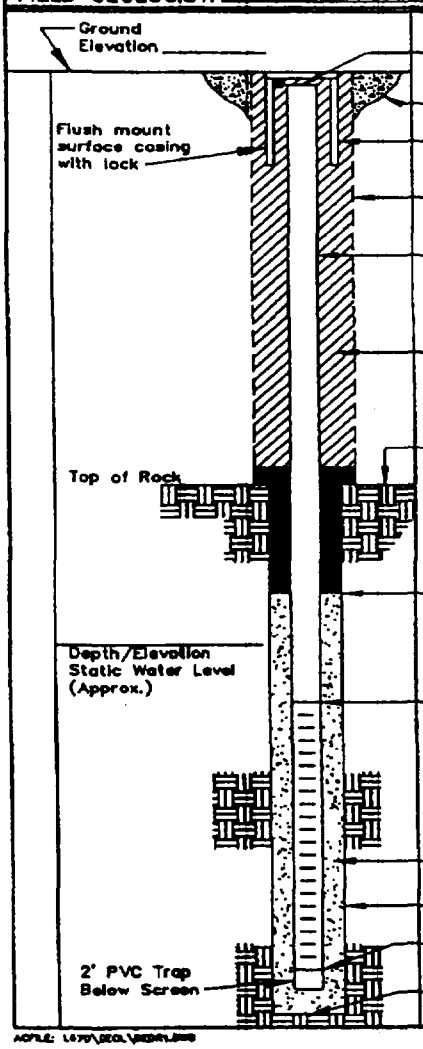

ELEVATION TOP OF RISER: _____
TYPE OF SURFACE SEAL: _____
TYPE OF PROTECTIVE CASING: _____
I.D. OF PROTECTIVE CASING: _____
DIAMETER OF HOLE: _____
TYPE OF RISER PIPE: _____
RISER PIPE I.D.: _____
TYPE OF BACKFILL/SEAL: _____
_____
DEPTH/ELEVATION TOP OF BEDROCK: _____/_____
DEPTH/ELEVATION TOP OF SAND: _____/_____
DEPTH/ELEVATION TOP OF SCREEN: _____/_____
TYPE OF SCREEN: _____
SLOT SIZE x LENGTH: _____
TYPE OF SAND PACK: _____
DIAMETER OF HOLE IN BEDROCK: _____
DEPTH/ELEVATION BOTTOM OF SCREEN: _____/_____
DEPTH/ELEVATION BOTTOM OF SAND: _____/_____
DEPTH/ELEVATION BOTTOM OF HOLE: _____/_____
BACKFILL MATERIAL BELOW SAND: _____

ATTACHMENT C-10
EXAMPLE TEST PIT LOG

TEST PIT LOG

Tetra Tech NUS, Inc.

PROJECT: _____ TEST PIT NO.:
PROJECT NO _____ DATE: _____
LOCATION: _____
FIELD GEOLOGIST: _____

DEPTH (ft.)	LITHOLOGY CHANGE (Depth ft.)	MATERIAL DESCRIPTION (Soil Density / Consistency, Color)	USCS	REMARKS

Test Pit Cross Section and / or Plan View

REMARKS _____

PHOTO LOG _____ TEST PIT _____

PAGE ____ OF ____

ATTACHMENT C-11
EXAMPLE CERTIFICATE OF CONFORMANCE

MONITORING WELL MATERIALS CERTIFICATE OF CONFORMANCE

Well Designation: _____ Site Geologist: _____
Site Name: _____ Drilling Company: _____
Date Installed: _____ Driller: _____
Project Name: _____ Project Number: _____

Material	Brand/Description	Source/Supplier	Sample Collected ?
Well Casing			
Well Screen			
End Cap			
Drilling Fluid			
Drilling Fluid Additives			
Backfill Material			
Annular Filter Pack			
Bentonite Seal			
Annular Grout			
Surface Cement			
Protective Casing			
Paint			
Rod Lubricant			
Compressor Oil			

To the best of my knowledge, I certify that the above described materials were used during installation of this monitoring well.

Signature of Site Geologist: _____

ATTACHMENT C-12
EXAMPLE MONITORING WELL DEVELOPMENT RECORD

Tetra Tech NUS, Inc.

MONITORING WELL DEVELOPMENT RECORD

Page ___ of ____

Site: _____ Depth to Bottom (ft.): _____ Project Name: _____
Well: _____ Static Water Level Before (ft.): _____ Project Number: _____
Date Installed: _____ Static Water Level After (ft.): _____ Site Geologist: _____
Date Developed: _____ Screen Length (ft.): _____ Drilling Co.: _____
Dev. Method: _____ Specific Capacity: _____
Pump Type: _____ Casing ID (in.): _____

Time	Estimated Sediment Thickness (Ft.)	Cumulative Water Volume (Gal.)	Water Level Readings (Ft. below TOC)	Temperature (Degrees C)	pH	Specific Conductance (Units ____)	Turbidity (NTU)	Remarks (odor, color, etc.)

ATTACHMENT D
EXAMPLE EQUIPMENT CALIBRATION LOG

Tetra Tech NUS, Inc.

EQUIPMENT CALIBRATION LOG

PROJECT NAME : _____ INSTRUMENT NAME/MODEL: _____

SITE NAME: _____ MANUFACTURER: _____

PROJECT No.: _____ SERIAL NUMBER: _____

Date of Calibration	Instrument I.D. Number	Person Performing Calibration	Instrument Settings		Instrument Readings		Calibration Standard (Lot No.)	Remarks and Comments
			Pre-calibration	Post-calibration	Pre-calibration	Post-calibration		

ATTACHMENT E

Tetra Tech NUS, Inc.

DAILY ACTIVITIES RECORD

PROJECT NAME: _____ **PROJECT NUMBER:** _____

CLIENT: _____ **LOCATION:** _____

DATE: _____ **ARRIVAL TIME:** _____

Tt NUS PERSONNEL: _____ **DEPARTURE TIME:** _____

CONTRACTOR: _____ **DRILLER:** _____

ITEM	QUANTITY ESTIMATE	QUANTITY TODAY	PREVIOUS TOTAL QUANTITY	CUMULATIVE QUANTITY TO DATE

COMMENTS: _____

APPROVED BY:

_____ _____

Tt NUS REPRESENTATIVE DRILLER

DATE: _____

ATTACHMENT F
FIELD TRIP SUMMARY REPORT
PAGE 1 OF 2

SUNDAY

Date: _____ Personnel: _____

Weather: _____ Onsite: _____

Site Activities: _____

_____

_____

_____

MONDAY

Date: _____ Personnel: _____

Weather: _____ Onsite: _____

Site Activities: _____

_____

_____

_____

TUESDAY

Date: _____ Personnel: _____

Weather: _____ Onsite: _____

Site Activities: _____

_____

_____

_____

WEDNESDAY

Date: _____ Personnel: _____

Weather: _____ Onsite: _____

Site Activities: _____

_____

_____

_____

ATTACHMENT F
PAGE 2 OF 2
FIELD TRIP SUMMARY REPORT

THURSDAY

Date: _____ Personnel: _____

Weather: _____ Onsite: _____

Site Activities: _____

_____

_____

_____

FRIDAY

Date: _____ Personnel: _____

Weather: _____ Onsite: _____

Site Activities: _____

_____

_____

_____

SATURDAY

Date: _____ Personnel: _____

Weather: _____ Onsite: _____

Site Activities: _____

_____

_____

_____

TABLE OF CONTENTS

SECTION **PAGE**

1.0 PURPOSE **3**

2.0 SCOPE **3**

3.0 GLOSSARY **3**

4.0 RESPONSIBILITIES **3**

5.0 PROCEDURES **3**

5.1 MATERIALS NEEDED 3
5.2 CLASSIFICATION OF SOILS 3
5.2.1 USCS Classification 6
5.2.2 Color 6
5.2.3 Relative Density and Consistency 6
5.2.4 Weight Percentages 7
5.2.5 Moisture 10
5.2.6 Stratification 10
5.2.7 Texture/Fabric/Bedding 10
5.2.8 Summary of Soil Classification 10
5.3 CLASSIFICATION OF ROCKS 13
5.3.1 Rock Type 13
5.3.2 Color 16
5.3.3 Bedding Thickness 16
5.3.4 Hardness 16
5.3.5 Fracturing 16
5.3.6 Weathering 17
5.3.7 Other Characteristics 17
5.3.8 Additional Terms Used in the Description of Rock 18
5.4 ABBREVIATIONS 19
5.5 BORING LOGS AND DOCUMENTATION 19
5.5.1 Soil Classification 19
5.5.2 Rock Classification 23
5.5.3 Classification of Soil and Rock from Drill Cuttings 24
5.6 REVIEW 24

6.0 REFERENCES **24**

7.0 RECORDS **25**

TABLE OF CONTENTS (Continued)

FIGURES

NUMBERS		PAGE
1	BORING LOG (EXAMPLE)	4
2	CONSISTENCY FOR COHESIVE SOILS	8
3	BEDDING THICKNESS CLASSIFICATION	10
4	GRAIN SIZE CLASSIFICATION FOR ROCKS	12
5	COMPLETED BORING LOG (EXAMPLE)	17

1.0 PURPOSE

The purpose of this document is to establish standard procedures and technical guidance on borehole and sample logging.

2.0 SCOPE

These procedures provide descriptions of the standard techniques for borehole and sample logging. These techniques shall be used for each boring logged to provide consistent descriptions of subsurface lithology. While experience is the only method to develop confidence and accuracy in the description of soil and rock, the field geologist/engineer can do a good job of classification by careful, thoughtful observation and by being consistent throughout the classification procedure.

3.0 GLOSSARY

None.

4.0 RESPONSIBILITIES

Site Geologist. Responsible for supervising all boring activities and assuring that each borehole is completely logged. If more than one rig is being used on site, the Site Geologist must make sure that each field geologist is properly trained in logging procedures. A brief review or training session may be necessary prior to the start up of the field program and/or upon completion of the first boring.

5.0 PROCEDURES

The classification of soil and rocks is one of the most important jobs of the field geologist/engineer. To maintain a consistent flow of information, it is imperative that the field geologist/engineer understand and accurately use the field classification system described in this SOP. This identification is based on visual examination and manual tests.

5.1 Materials Needed

When logging soil and rock samples, the geologist or engineer may be equipped with the following:

- Rock hammer
- Knife
- Camera
- Dilute hydrochloric acid (HCl)
- Ruler (marked in tenths and hundredths of feet)
- Hand Lens

5.2 Classification of Soils

All data shall be written directly on the boring log (Figure 1) or in a field notebook if more space is needed. Details on filling out the boring log are discussed in Section 5.5.

FIGURE 1
BORING LOG (EXAMPLE)

BORING LOG

Page ___ of ___

PROJECT NAME: _____ BORING NUMBER: _____
PROJECT NUMBER: _____ DATE: _____
DRILLING COMPANY: _____ GEOLOGIST: _____
DRILLING RIG: _____ DRILLER: _____

Sample No. and Type or RQD	Depth (Ft.) or Run No.	Blows / 6" or RQD (%)	Sample Recovery / Sample Length	Lithology Change (Depth/Ft.) or Screened Interval	MATERIAL DESCRIPTION: Soil Density/ Consistency or Rock Hardness	Color	Material Classification	USCS *	Remarks	PID/FID Reading (ppm): Sample	Sampler BZ	Borehole**	Driller BZ**

* When rock coring, enter rock broiseness.

** Include monitor reading in 6 foot intervals @ borehole. Increase reading frequency if elevated response-read.

Drilling Area Background (ppm): ____

Remarks: _____

Converted to Well: Yes _____ No _____ Well I.D. #: _____

FIGURE 1 (CONTINUED)

SOIL TERMS

UNIFIED SOIL CLASSIFICATION (USCS)

COARSE-GRAINED SOILS
More Than Half of Material is LARGER Than No. 200 Sieve Size

FIELD IDENTIFICATION PROCEDURES (Excluding Particles Larger Than 3 Inches and Basing Fractions on Estimated Weights)			GROUP SYMBOL	TYPICAL NAMES
GRAVELS (50%(+)) 3/4" ⊕	CLEAN GRAVELS (Low % Fines)	Wide range in grain size and substantial amounts of all intermediate particle sizes.	GW	Well graded gravels, gravel-sand mixtures, little or no fines.
		Predominantly one size or a range of sizes with some intermediate sizes missing.	GP	Poorly graded gravels, gravel-sand mixtures, little or no fines
	GRAVELS WIFINES (High % Fines)	Non-plastic fines (for identification procedures, see ML)	GM	Silty gravels, poorly graded gravel-sand-silt mixtures.
		Plastic fines (for identification procedures, see CL)	GC	Clayey gravels, poorly graded gravel-sand-clay mixtures
SANDS 50%(-)< 3/4"⊕	CLEAN SANDS (Low % Fines)	Wide range in grain size and substantial amounts of all intermediate particle sizes.	SW	Well graded sand, gravelly sands, little or no fines.
		Predominantly one size or a range of sizes with some intermediate sizes missing.	SP	Poorly graded sands, gravelly sands, little or no fines
	SANDS WIFINES (High % Fines)	Non-plastic fines (for identification procedures, see ML)	SM	Silty sands, poorly graded sand-silt mixtures.
		Plastic fines (for identification procedures, see CL)	SC	Clayey sands, poorly graded sand-clay mixtures.

FINE-GRAINED SOILS
More Than Half of Material is SMALLER Than

FIELD IDENTIFICATION PROCEDURES (Excluding Particles Larger Than 3 Inches and Basing Fractions on Estimated Weights)

Identification Procedures on Fraction Smaller Than No. 40 Sieve Size

	DRY STRENGTH (Crushing Characteristics)	DILATANCY (Reaction to Shaking)	TOUGHNESS (Consistency Near Plastic Limit)
SILTS AND CLAYS Liquid Limit <50	None to Slight	Quick to Slow	None
	Medium to High	None to Very Slow	Medium
	Slight to Medium	Slow	Slight
SILTS AND CLAYS Liquid Limit >50	Slight to Medium	Slow to None	Slight to Medium
	High to Very High	None	High
	Medium to High	None to Very Slow	Slight to Medium
HIGHLY ORGANIC SOILS	Readily identified by color, odor, spongy feel and frequently by fibrous texture.		

Boundary classifications: Soils possessing characteristics of two groups are designated by combining group symbols. For example, GW-GC, well graded gravel-sand mixture with clay binder.
All sieve sizes on this chart are U.S. Standard.

DENSITY OF GRANULAR SOILS

DESIGNATION	STANDARD PENETRATION RESISTANCE-BLOWS/FOOT
Very Loose	0-4
Loose	5-10
Medium Loose	11-30
Dense	31-50
Very Dense	Over 50

CONSISTENCY OF COHESIVE SOILS

CONSISTENCY	UNC COMPRESSIVE STRENGTH (TONS/SQ. FT.)	STANDARD PENETRATION RESISTANCE-BLOWS/FOOT	
Very Soft	Less than 0.25	0 to 2	Easily penetra
Soft	0.25 to 0.50	2 to 4	Easily penetra
Medium Stiff	0.50 to 1.0	4 to 8	Can be penetr
Stiff	1.0 to 2.0	8 to 15	Readily indent
Very Stiff	2.0 to 4.0	15 to 30	Readily indent
Hard	More than 4.0	Over 30	Indented with

ROCK TERMS

ROCK HARDNESS (FROM CORE SAMPLES)

Descriptive Terms	Scratchiness or Knife Effects	Hammer Effects
Soft	Easily Gouged	Crushes when pounced with hammer
Medium Soft	Can be Gouged	Breaks (one blow) crumbly edges
Medium Hard	Can be scratched	Breaks (one blow) sharp edges
Hard	Cannot be scratched	Breaks conchoidally (concentrically) sharp edges

ROCK BROKENNESS

Descriptive Terms	Abbreviation	Spacing
Very Broken	(V. Br.)	0-2"
Broken	(Br.)	2"-1'
Blocky	(Bl.)	1'-3'
Massive	(M.)	3'-10'

LEGEND:

SOIL SAMPLES - TYPES

S-2" Split-Barrel Sample

ST-3" O.D. Undisturbed Sample

O - Other Samples, Specify in Remarks

ROCK SAMPLES - TYPES

X-NX (Conventional) Core (~2-1/8" O.D.) 12/10

Q-HQ (Wireline) Core (~1-7/8" O.D.)

Z - Other Core Bits, Specify in Remarks 12/10

WATER LEVELS

▽ 12.0
Initial Level
w/Date & Depth

▽ 12.0
SHUT-IN Level
w/Date & Depth

5.2.1 USCS Classification

Soils are to be classified according to the Unified Soil Classification System (USCS). This method of classification is detailed in Figure 1 (Continued).
This method of classification identifies soil types on the basis of grain size and cohesiveness.

Fine-grained soils, or fines, are smaller than the No. 200 sieve and are of two types: silt (M) and clay (C). Some classification systems define size ranges for these soil particles, but for field classification purposes, they are identified by their respective behaviors. Organic material (O) is a common component of soil but has no size range; it is recognized by its composition. The careful study of the USCS will aid in developing the competence and consistency necessary for the classification of soils.

Coarse-grained soils shall be divided into rock fragments, sand, or gravel. The terms sand and gravel not only refer to the size of the soil particles but also to their depositional history. To insure accuracy in description, the term rock fragments shall be used to indicate angular granular materials resulting from the breakup of rock. The sharp edges typically observed indicate little or no transport from their source area, and therefore the term provides additional information in reconstructing the depositional environment of the soils encountered. When the term "rock fragments" is used it shall be followed by a size designation such as "(1/4 inchΦ-1/2 inchΦ)" or "coarse-sand size" either immediately after the entry or in the remarks column. The USCS classification would not be affected by this variation in terms.

5.2.2 Color

Soil colors shall be described utilizing a single color descriptor preceded, when necessary, by a modifier to denote variations in shade or color mixtures. A soil could therefore be referred to as "gray" or "light gray" or "blue-gray." Since color can be utilized in correlating units between sampling locations, it is important for color descriptions to be consistent from one boring to another.

Colors must be described while the sample is still moist. Soil samples shall be broken or split vertically to describe colors. Samplers tend to smear the sample surface creating color variations between the sample interior and exterior.

The term "mottled" shall be used to indicate soils irregularly marked with spots of different colors. Mottling in soils usually indicates poor aeration and lack of good drainage.

Soil Color Charts shall not be used unless specified by the project manager.

5.2.3 Relative Density and Consistency

To classify the relative density and/or consistency of a soil, the geologist is to first identify the soil type. Granular soils contain predominantly sands and gravels. They are noncohesive (particles do not adhere well when compressed). Finer-grained soils (silts and clays) are cohesive (particles will adhere together when compressed).

The density of noncohesive, granular soils is classified according to standard penetration resistances obtained from split-barrel sampling performed according to the methods detailed in Standard Operating Procedures GH-1.3 and SA-1.3. Those designations are:

Designation	Standard Penetration Resistance (Blows per Foot)
Very loose	0 to 4
Loose	5 to 10
Medium dense	11 to 30
Dense	31 to 50
Very dense	Over 50

Standard penetration resistance is the number of blows required to drive a split-barrel sampler with a 2-inch outside diameter 12 inches into the material using a 140-pound hammer falling freely through 30 inches. The sampler is driven through an 18-inch sample interval, and the number of blows is recorded for each 6-inch increment. The density designation of granular soils is obtained by adding the number of blows required to penetrate the last 12 inches of each sample interval. It is important to note that if gravel or rock fragments are broken by the sampler or if rock fragments are lodged in the tip, the resulting blow count will be erroneously high, reflecting a higher density than actually exists. This shall be noted on the log and referenced to the sample number. Granular soils are given the USCS classifications GW, GP, GM, SW, SP, SM, GC, or SC (see Figure 1).

The consistency of cohesive soils is determined by performing field tests and identifying the consistency as shown in Figure 2.

Cohesive soils are given the USCS classifications ML, MH, CL, CH, OL, or OH (see Figure 1).

The consistency of cohesive soils is determined either by blow counts, a pocket penetrometer (values listed in the table as Unconfined Compressive Strength), or by hand by determining the resistance to penetration by the thumb. The pocket penetrometer and thumb determination methods are conducted on a selected sample of the soil, preferably the lowest 0.5 foot of the sample in the split-barrel sampler. The sample shall be broken in half and the thumb or penetrometer pushed into the end of the sample to determine the consistency. Do not determine consistency by attempting to penetrate a rock fragment. If the sample is decomposed rock, it is classified as a soft decomposed rock rather than a hard soil. Consistency shall not be determined solely by blow counts. One of the other methods shall be used in conjunction with it. The designations used to describe the consistency of cohesive soils are shown in Figure 2.

5.2.4 Weight Percentages

In nature, soils are comprised of particles of varying size and shape, and are combinations of the various grain types. The following terms are useful in the description of soil:

Terms of Identifying Proportion of the Component	Defining Range of Percentages by Weight
Trace	0 - 10 percent
Some	11 - 30 percent
Adjective form of the soil type (e.g., "sandy")	31 - 50 percent

FIGURE 2

CONSISTENCY FOR COHESIVE SOILS

Consistency	Standard Penetration Resistance (Blows per Foot)	Unconfined Compressive Strength (Tons/Sq. Foot by pocket penetration)	Field Identification
Very soft	0 to 2	Less than 0.25	Easily penetrated several inches by fist
Soft	2 to 4	0.25 to 0.50	Easily penetrated several inches by thumb
Medium stiff	4 to 8	0.50 to 1.0	Can be penetrated several inches by thumb with moderate effort
Stiff	8 to 15	1.0 to 2.0	Readily indented by thumb but penetrated only with great effort
Very stiff	15 to 30	2.0 to 4.0	Readily indented by thumbnail
Hard	Over 30	More than 4.0	Indented with difficulty by thumbnail

Examples:

- Silty fine sand: 50 to 69 percent fine sand, 31 to 50 percent silt.
- Medium to coarse sand, some silt: 70 to 80 percent medium to coarse sand, 11 to 30 percent silt.
- Fine sandy silt, trace clay: 50 to 68 percent silt, 31 to 49 percent fine sand, 1 to 10 percent clay.
- Clayey silt, some coarse sand: 70 to 89 percent clayey silt, 11 to 30 percent coarse sand.

5.2.5 Moisture

Moisture content is estimated in the field according to four categories: dry, moist, wet, and saturated. In dry soil, there appears to be little or no water. Saturated samples obviously have all the water they can hold. Moist and wet classifications are somewhat subjective and often are determined by the individual's judgment. A suggested parameter for this would be calling a soil wet if rolling it in the hand or on a porous surface liberates water, i.e., dirties or muddies the surface. Whatever method is adopted for describing moisture, it is important that the method used by an individual remains consistent throughout an entire drilling job.

Laboratory tests for water content shall be performed if the natural water content is important.

5.2.6 Stratification

Stratification can only be determined after the sample barrel is opened. The stratification or bedding thickness for soil and rock is depending on grain size and composition. The classification to be used for stratification description is shown in Figure 3.

5.2.7 Texture/Fabric/Bedding

The texture/fabric/bedding of the soil shall be described. Texture is described as the relative angularity of the particles: rounded, subrounded, subangular, and angular. Fabric shall be noted as to whether the particles are flat or bulky and whether there is a particular relation between particles (i.e., all the flat particles are parallel or there is some cementation). The bedding or structure shall also be noted (e.g., stratified, lensed, nonstratified, heterogeneous varved).

5.2.8 Summary of Soil Classification

In summary, soils shall be classified in a similar manner by each geologist/engineer at a project site. The hierarchy of classification is as follows:

- Density and/or consistency
- Color
- Plasticity (Optional)
- Soil types
- Moisture content
- Stratification
- Texture, fabric, bedding
- Other distinguishing features

FIGURE 3

BEDDING THICKNESS CLASSIFICATION

Thickness (metric)	Thickness (Approximate English Equivalent)	Classification
> 1.0 meter	> 3.3'	Massive
30 cm - 1 meter	1.0' - 3.3'	Thick Bedded
10 cm - 30 cm	4" - 1.0'	Medium Bedded
3 cm - 10 cm	1" - 4"	Thin Bedded
1 cm - 3 cm	2/5" - 1"	Very Thin Bedded
3 mm - 1 cm	1/8" - 2/5"	Laminated
1 mm - 3 mm	1/32" - 1/8"	Thinly Laminated
< 1 mm	<1/32"	Micro Laminated

(Weir, 1973 and Ingram, 1954)

5.3 Classification of Rocks

Rocks are grouped into three main divisions: sedimentary, igneous and metamorphic. Sedimentary rocks are by far the predominant type exposed at the earth's surface. The following basic names are applied to the types of rocks found in sedimentary sequences:

- Sandstone - Made up predominantly of granular materials ranging between 1/16 to 2 mm in diameter.
- Siltstone - Made up of granular materials less than 1/16 to 1/256 mm in diameter. Fractures irregularly. Medium thick to thick bedded.
- Claystone - Very fine-grained rock made up of clay and silt-size materials. Fractures irregularly. Very smooth to touch. Generally has irregularly spaced pitting on surface of drilled cores.
- Shale - A fissile very fine-grained rock. Fractures along bedding planes.
- Limestone - Rock made up predominantly of calcite ($CaCO_3$). Effervesces strongly upon the application of dilute hydrochloric acid.
- Coal - Rock consisting mainly of organic remains.
- Others - Numerous other sedimentary rock types are present in lesser amounts in the stratigraphic record. The local abundance of any of these rock types is dependent upon the depositional history of the area. Conglomerate, halite, gypsum, dolomite, anhydrite, lignite, etc. are some of the rock types found in lesser amounts.

In classifying a sedimentary rock the following hierarchy shall be noted:

- Rock type
- Color
- Bedding thickness
- Hardness
- Fracturing
- Weathering
- Other characteristics

5.3.1 Rock Type

As described above, there are numerous types of sedimentary rocks. In most cases, a rock will be a combination of several grain types, therefore, a modifier such as a sandy siltstone, or a silty sandstone can be used. The modifier indicates that a significant portion of the rock type is composed of the modifier. Other modifiers can include carbonaceous, calcareous, siliceous, etc.

Grain size is the basis for the classification of clastic sedimentary rocks. Figure 4 is the Udden-Wentworth classification that will be assigned to sedimentary rocks. The individual boundaries are slightly different than the USCS subdivision for soil classification. For field determination of grain sizes, a scale can be used for the coarse grained rocks. For example, the division between siltstone and claystone may not be measurable in the field. The boundary shall be determined by use of a hand lens. If the grains cannot be seen with the naked eye but are distinguishable with a hand lens, the rock is a siltstone. If the grains are not distinguishable with a hand lens, the rock is a claystone.

FIGURE 4

GRAIN SIZE CLASSIFICATION FOR ROCKS

Particle Name	Grain Size Diameter
Cobbles	> 64 mm
Pebbles	4 - 64 mm
Granules	2 - 4 mm
Very Coarse Sand	1 - 2 mm
Coarse Sand	0.5 - 1 mm
Medium Sand	0.25 - 0.5 mm
Fine Sand	0.125 - 0.25 mm
Very Fine Sand	0.0625 - 0.125 mm
Silt	0.0039 - 0.0625 mm

After Wentworth, 1922

5.3.2 Color

The color of a rock can be determined in a similar manner as for soil samples. Rock core samples shall be classified while wet, when possible, and air cored samples shall be scraped clean of cuttings prior to color classifications.

Rock color charts shall not be used unless specified by the Project Manager.

5.3.3 Bedding Thickness

The bedding thickness designations applied to soil classification (see Figure 3) will also be used for rock classification.

5.3.4 Hardness

The hardness of a rock is a function of the compaction, cementation, and mineralogical composition of the rock. A relative scale for sedimentary rock hardness is as follows:

- Soft - Weathered, considerable erosion of core, easily gouged by screwdriver, scratched by fingernail. Soft rock crushes or deforms under pressure of a pressed hammer. This term is always used for the hardness of the saprolite (decomposed rock which occupies the zone between the lowest soil horizon and firm bedrock).

- Medium soft - Slight erosion of core, slightly gouged by screwdriver, or breaks with crumbly edges from single hammer blow.

- Medium hard - No core erosion, easily scratched by screwdriver, or breaks with sharp edges from single hammer blow.

- Hard - Requires several hammer blows to break and has sharp conchoidal breaks. Cannot be scratched with screwdriver.

Note the difference in usage here of the works "scratch" and "gouge." A scratch shall be considered a slight depression in the rock (do not mistake the scraping off of rock flour from drilling with a scratch in the rock itself), while a gouge is much deeper.

5.3.5 Fracturing

The degree of fracturing or brokenness of a rock is described by measuring the fractures or joint spacing. After eliminating drilling breaks, the average spacing is calculated and the fracturing is described by the following terms:

- Very broken (V. BR.) - Less than 2-inch spacing between fractures
- Broken (BR.) - 2-inch to 1-foot spacing between fractures
- Blocky (BL.) - 1- to 3-foot spacing between fractures
- Massive (M.) - 3 to 10-foot spacing between fractures

The structural integrity of the rock can be approximated by calculating the Rock Quality Designation (RQD) of cores recovered. The RQD is determined by adding the total lengths of all pieces exceeding 4 inches and dividing by the total length of the coring run, to obtain a percentage.

Method of Calculating RQD
(After Deere, 1964)

$$RQD\ \% = r/l \times 100$$

r = Total length of all pieces of the lithologic unit being measured, which are greater than 4 inches length, and have resulted from natural breaks. Natural breaks include slickensides, joints, compaction slicks, bedding plane partings (not caused by drilling), friable zones, etc.

l = Total length of the coring run.

5.3.6 Weathering

The degree of weathering is a significant parameter that is important in determining weathering profiles and is also useful in engineering designs. The following terms can be applied to distinguish the degree of weathering:

- Fresh - Rock shows little or no weathering effect. Fractures or joints have little or no staining and rock has a bright appearance.
- Slight - Rock has some staining which may penetrate several centimeters into the rock. Clay filling of joints may occur. Feldspar grains may show some alteration.
- Moderate - Most of the rock, with exception of quartz grains, is stained. Rock is weakened due to weathering and can be easily broken with hammer.
- Severe - All rock including quartz grains is stained. Some of the rock is weathered to the extent of becoming a soil. Rock is very weak.

5.3.7 Other Characteristics

The following items shall be included in the rock description:

- Description of contact between two rock units. These can be sharp or gradational.
- Stratification (parallel, cross stratified).
- Description of any filled cavities or vugs.
- Cementation (calcareous, siliceous, hematitic).
- Description of any joints or open fractures.
- Observation of the presence of fossils.
- Notation of joints with depth, approximate angle to horizontal, any mineral filling or coating, and degree of weathering.

All information shown on the boring logs shall be neat to the point where it can be reproduced on a copy machine for report presentation. The data shall be kept current to provide control of the drilling program and to indicate various areas requiring special consideration and sampling.

5.3.8 Additional Terms Used in the Description of Rock

The following terms are used to further identify rocks:

- Seam - Thin (12 inches or less), probably continuous layer.
- Some - Indicates significant (15 to 40 percent) amounts of the accessory material. For example, rock composed of seams of sandstone (70 percent) and shale (30 percent) would be "sandstone – some shale seams."
- Few - Indicates insignificant (0 to 15 percent) amounts of the accessory material. For example, rock composed of seam of sandstone (90 percent) and shale (10 percent) would be "sandstone – few shale seams."
- Interbedded - Used to indicate thin or very thin alternating seams of material occurring in approximately equal amounts. For example, rock composed of thin alternating seams of sandstone (50 percent) and shale (50 percent) would be "interbedded sandstone and shale."
- Interlayered - Used to indicate thick alternating seams of material occurring in approximately equal amounts.

The preceding sections describe the classification of sedimentary rocks. The following are some basic names that are applied to igneous rocks:

- Basalt - A fine-grained extrusive rock composed primarily of calcic plagioclase and pyroxene.
- Rhyolite - A fine-grained volcanic rock containing abundant quartz and orthoclase. The fine-grained equivalent of a granite.
- Granite - A coarse-grained plutonic rock consisting essentially of alkali feldspar and quartz.
- Diorite - A coarse-grained plutonic rock consisting essentially of sodic plagioclase and hornblende.
- Gabbro - A coarse-grained plutonic rock consisting of calcic plagioclase and clinopyroxene. Loosely used for any coarse-grained dark igneous rock.

The following are some basic names that are applied to metamorphic rocks:

- Slate - A very fine-grained foliated rock possessing a well developed slaty cleavage. Contains predominantly chlorite, mica, quartz, and sericite.
- Phyllite - A fine-grained foliated rock that splits into thin flaky sheets with a silky sheen on cleavage surface.
- Schist - A medium to coarse-grained foliated rock with subparallel arrangement of the micaceous minerals which dominate its composition.
- Gneiss - A coarse-grained foliated rock with bands rich in granular and platy minerals.
- Quartzite - A fine- to coarse-grained nonfoliated rock breaking across grains, consisting essentially of quartz sand with silica cement.

5.4 Abbreviations

Abbreviations may be used in the description of a rock or soil. However, they shall be kept at a minimum. Following are some of the abbreviations that may be used:

C	-	Coarse	Lt	-	Light	Yl	-	Yellow
Med	-	Medium	BR	-	Broken	Or	-	Orange
F	-	Fine	BL	-	Blocky	SS	-	Sandstone
V	-	Very	M	-	Massive	Sh	-	Shale
Sl	-	Slight	Br	-	Brown	LS	-	Limestone
Occ	-	Occasional	Bl	-	Black	Fgr	-	Fine-grained
Tr	-	Trace						

5.5 Boring Logs and Documentation

This section describes in more detail the procedures to be used in completing boring logs in the field. Information obtained from the preceding sections shall be used to complete the logs. A sample boring log has been provided as Figure 5.

The field geologist/engineer shall use this example as a guide in completing each boring log. Each boring log shall be fully described by the geologist/engineer as the boring is being drilled. Every sheet contains space for 25 feet of log. Information regarding classification details is provided either on the back of the boring log or on a separate sheet, for field use.

5.5.1 Soil Classification

- Identify site name, boring number, job number, etc. Elevations and water level data to be entered when surveyed data is available.

- Enter sample number (from SPT) under appropriate column. Enter depth sample was taken from (1 block = 1 foot). Fractional footages, i.e., change of lithology at 13.7 feet, shall be lined off at the proportional location between the 13- and 14-foot marks. Enter blow counts (Standard Penetration Resistance) diagonally (as shown). Standard penetration resistance is covered in Section 5.2.3.

- Determine sample recovery/sample length as shown. Measure the total length of sample recovered from the split-spoon sampler, including material in the drive shoe. Do not include cuttings or wash material that may be in the upper portion of the sample tube.

- Indicate any change in lithology by drawing a line at the appropriate depth. For example, if clayey silt was encountered from 0 to 5.5 feet and shale from 5.5 to 6.0 feet, a line shall be drawn at this increment. This information is helpful in the construction of cross-sections. As an alternative, symbols may be used to identify each change in lithology.

- The density of granular soils is obtained by adding the number of blows for the last two increments. Refer to Density of Granular Soils Chart on back of log sheet. For consistency of cohesive soils refer also to the back of log sheet - Consistency of Cohesive Soils. Enter this information under the appropriate column. Refer to Section 5.2.3.

FIGURE 5
COMPLETED BORING LOG (EXAMPLE)

BORING LOG

Page 1 of 1

PROJECT NAME: NSB- SITE
PROJECT NUMBER: 9594
DRILLING COMPANY: SOILTEST CO.
DRILLING RIG: CME-55
BORING NUMBER: SB/MW 1
DATE: 3/8/96
GEOLOGIST: S J CONTI
DRILLER: R. ROCK

Sample No. and Type or RQD	Depth (Ft.) or Run No.	Blows / 6" or RQD (%)	Sample Recovery / Sample Length	Lithology Change (Depth/Ft.) or Screened Interval	Soil Density/ Consistency or Rock Hardness	Color	Material Classification	USCS *	Remarks	PID/FID Reading (ppm) Sample	Sampler BZ	Borehole**	Driller BZ**
S-1 C 0800	0.0	7/6	1.5/2.0		M DENSE	BRN TO BLK	SILTY SAND - SOME	SM	MOIST SL. ORG. ODOR	5	0	0	0
	2.0	9/10					ROCK FR: TR BRICKS (FILL)		FILL TO 4'±				
	4.0			4.0									
S-2 C 0810	6.0	5/7 9/8	2.9/2.0	7'±	M DENSE	BRN	SILTY SAND - TR FINE GRAVEL	SM	MOIST - W ODOR NAT. MATL. TOOK SAMPLE SB01-0406 FOR ANALYSIS	10	0	-	-
	8.0			8.0									
S-3 C 0820	10.0	6/8 17/16	1.9/2.0		DENSE	TAN BRN	FINE TO COARSE SAND TR.F. GRAVEL	SW	WET HIT WATER: 7'±	0	0	0	0
	12.0			12.0									
S-4 C 0830	14.0	7/6 5/8	1.6/2.0		STIFF	GRAY	SILTY CLAY	CL	MOIST → WET	0	.5	-	-
	15.0			15.0					AUGER REF @ 15'				
9/5	①		4.0/5.0	LIMEIME 16 19'	M HARD	BRN	SILTSTONE	VER	WEATHERED LO ∡JNTS @ 15.5 WATER STAINS @ 16.5, 17.1, 17.5 LOSING SOME	0	0	0	0
	20.0				HARD	GRAY	SANDSTONE - SOME SILTSTONE	BR	DRILL H2O @ 17'± SET TEMP 6" CAS TO 15.5				
4.9/5.0	②		5.0/5.0						SET 2" ⌀ PVC SCREEN 16-25 SAND 14-25 PELLETS 12-14	0	0	0	0
	25.0			25									

* When rock coring, enter rock brokeness.

** Include monitor reading in 5 foot intervals @ borehole. Increase reading frequency if elevated response read.

• 1-20Z
1-80Z

Drilling Area Background (ppm): 0

Remarks: CME-55 R16, 4¼" ID HSA - 9" OD ±
2" SPLIT SPOONS - 140 LB HAMMER - 30" DROP
NX CORE IN BEDROCK RUN ① = 25 min. RUN ② = 15 min

Converted to Well: Yes ✓ No _____ Well I.D. #: MW-1

- Enter color of the material in the appropriate column.

- Describe material using the USCS. Limit this column for sample description only. The predominant material is described last. If the primary soil is silt but has fines (clay) - use clayey silt. Limit soil descriptors to the following:

  - Trace: 0 - 10 percent
  - Some: 11 - 30 percent
  - And/Or: 31 - 50 percent

- Also indicate under Material Classification if the material is fill or natural soils. Indicate roots, organic material, etc.

- Enter USCS symbol - use chart on back of boring log as a guide. If the soils fall into one of two basic groups, a borderline symbol may be used with the two symbols separated by a slash. For example ML/CL or SM/SP.

- The following information shall be entered under the "Remarks" column and shall include, but is not limited by, the following:

  - Moisture - estimate moisture content using the following terms - dry, moist, wet and saturated. These terms are determined by the individual. Whatever method is used to determine moisture, be consistent throughout the log.

  - Angularity - describe angularity of coarse grained particles using the terms angular, subangular, subrounded, or rounded. Refer to ASTM D 2488 or Earth Manual for criteria for these terms.

  - Particle shape - flat, elongated, or flat and elongated.

  - Maximum particle size or dimension.

  - Water level observations.

  - Reaction with HCl - none, weak, or strong.

- Additional comments:

  - Indicate presence of mica, caving of hole, when water was encountered, difficulty in drilling, loss or gain of water.

  - Indicate odor and Photoionization Detector (PID) or Flame Ionization Detector (FID) reading if applicable.

  - Indicate any change in lithology by drawing a line through the lithology change column and indicate the depth. This will help when cross-sections are subsequently constructed.

  - At the bottom of the page indicate type of rig, drilling method, hammer size and drop, and any other useful information (i.e., borehole size, casing set, changes in drilling method).

- Vertical lines shall be drawn (as shown in Figure 5) in columns 6 to 8 from the bottom of each sample to the top of the next sample to indicate consistency of material from sample to sample, if the material is consistent. Horizontal lines shall be drawn if there is a change in lithology, then vertical lines drawn to that point.

- Indicate screened interval of well, as needed, in the lithology column. Show top and bottom of screen. Other details of well construction are provided on the well construction forms.

5.5.2 Rock Classification

- Indicate depth at which coring began by drawing a line at the appropriate depth. Indicate core run depths by drawing coring run lines (as shown) under the first and fourth columns on the log sheet. Indicate RQD, core run number, RQD percent, and core recovery under the appropriate columns.

- Indicate lithology change by drawing a line at the appropriate depth as explained in Section 5.5.1.

- Rock hardness is entered under designated column using terms as described on the back of the log or as explained earlier in this section.

- Enter color as determined while the core sample is wet; if the sample is cored by air, the core shall be scraped clean prior to describing color.

- Enter rock type based on sedimentary, igneous or metamorphic. For sedimentary rocks use terms as described in Section 5.3. Again, be consistent in classification. Use modifiers and additional terms as needed. For igneous and metamorphic rock types use terms as described in Sections 5.3.8.

- Enter brokenness of rock or degree of fracturing under the appropriate column using symbols VBR, BR, BL, or M as explained in Section 5.3.5 and as noted on the back of the Boring Log.

- The following information shall be entered under the remarks column. Items shall include but are not limited to the following:

  - Indicate depths of joints, fractures and breaks and also approximate to horizontal angle (such as high, low), i.e., 70° angle from horizontal, high angle.
  - Indicate calcareous zones, description of any cavities or vugs.
  - Indicate any loss or gain of drill water.
  - Indicate drop of drill tools or change in color of drill water.

- Remarks at the bottom of Boring Log shall include:

  - Type and size of core obtained.
  - Depth casing was set.
  - Type of rig used.

- As a final check the boring log shall include the following:

  - Vertical lines shall be drawn as explained for soil classification to indicate consistency of bedrock material.

  - If applicable, indicate screened interval in the lithology column. Show top and bottom of screen. Other details of well construction are provided on the well construction forms.

5.5.3 Classification of Soil and Rock from Drill Cuttings

The previous sections describe procedures for classifying soil and rock samples when cores are obtained. However, some drilling methods (air/mud rotary) may require classification and borehole logging based on identifying drill cuttings removed from the borehole. Such cuttings provide only general information on subsurface lithology. Some procedures that shall be followed when logging cuttings are:

- Obtain cutting samples at approximately 5-foot intervals, sieve the cuttings (if mud rotary drilling) to obtain a cleaner sample, place the sample into a small sample bottle or "zip lock" bag for future reference, and label the jar or bag (i.e. hole number, depth, date, etc.). Cuttings shall be closely examined to determine general lithology.
- Note any change in color of drilling fluid or cuttings, to estimate changes in lithology.
- Note drop or chattering of drilling tools or a change in the rate of drilling, to determine fracture locations or lithologic changes.
- Observe loss or gain of drilling fluids or air (if air rotary methods are used), to identify potential fracture zones.
- Record this and any other useful information onto the boring log as provided in Figure 1.

This logging provides a general description of subsurface lithology and adequate information can be obtained through careful observation of the drilling process. It is recommended that split-barrel and rock core sampling methods be used at selected boring locations during the field investigation to provide detailed information to supplement the less detailed data generated through borings drilled using air/mud rotary methods.

5.6 Review

Upon completion of the borings logs, copies shall be made and reviewed. Items to be reviewed include:

- Checking for consistency of all logs.
- Checking for conformance to the guideline.
- Checking to see that all information is entered in their respective columns and spaces.

6.0 REFERENCES

Unified Soil Classification System (USCS).

ASTM D2488, 1985.

Earth Manual, U.S. Department of the Interior, 1974.

7.0 RECORDS

Originals of the boring logs shall be retained in the project files.

TETRA TECH NUS, INC.	STANDARD OPERATING PROCEDURES	Number SA-6.1	Page 1 of 24
		Effective Date 03/00	Revision 1
		Applicability Tetra Tech NUS, Inc.	
		Prepared Earth Sciences Department	
Subject NON-RADIOLOGICAL SAMPLE HANDLING		Approved D. Senovich	

TABLE OF CONTENTS

SECTION **PAGE**

1.0 PURPOSE 2

2.0 SCOPE 2

3.0 GLOSSARY 2

4.0 RESPONSIBILITIES 3

5.0 PROCEDURES 3

5.1 SAMPLE CONTAINERS 3
5.2 SAMPLE PRESERVATION 4
5.2.1 Overview 4
5.2.2 Preparation and Addition of Reagents 4
5.3 FIELD FILTRATION 5
5.4 SAMPLE PACKAGING AND SHIPPING 6
5.4.1 Environmental Samples 6
5.4.2 Hazardous Material Samples 7
5.4.3 Packaging and Shipping of Samples Classified as Flammable Liquid (or Solid) 8
5.5 SHIPMENT OF LITHIUM BATTERIES 11

6.0 REFERENCES 12

ATTACHMENTS

A GENERAL SAMPLE CONTAINER AND PRESERVATION REQUIREMENTS 13
B ADDITIONAL REQUIRED CONTAINERS, PRESERVATION TECHNIQUES, AND HOLDING TIMES 14
C DOT HAZARDOUS MATERIAL CLASSIFICATION (49 CFR 173.2(a)) 17
D GUIDE FOR HAZARDOUS MATERIALS SHIPPERS 19
E HAZARDOUS MATERIALS SHIPPING CHECK LIST 21
F DOT SEGREGATION AND SEPARATION CHART 22
G LITHIUM BATTERY SHIPPING PAPERS 23

1.0 PURPOSE

The purpose of this Standard Operating Procedure (SOP) is to provide information on sample preservation, packaging, and shipping procedures to be used in handling environmental samples submitted for chemical constituent, biological, or geotechnical analysis. Sample chain-of-custody procedures and other aspects of field documentation are addressed in SOP SA-6.3. Sample identification is addressed in SOP CT-04.

2.0 SCOPE

This procedure:

- Describes the appropriate containers to be used for samples depending on the analyses to be performed, and the steps necessary to preserve the samples when shipped off site for chemical analysis.
- Provides instruction for sample packaging and shipping in accordance with current U.S. Department of Transportation (DOT) and International Air Transportation Association (IATA) regulations. IATA regulates transportation of hazardous materials by air (which is the mode of transportation used for shipping nearly all samples derived during TtNUS projects).

3.0 GLOSSARY

Hazardous Material - A substance or material which has been determined by the Secretary of Transportation to be capable of posing an unreasonable risk to health, safety, and property when transported in commerce, and which has been so designated. Under 49 CFR, the term includes hazardous substances, hazardous wastes, marine pollutants, and elevated temperature materials, as well as materials designated as hazardous under the provisions of §172.101 and §172.102 and materials that meet the defining criteria for hazard classes and divisions in Part 173. With slight modifications, IATA has adopted DOT "hazardous materials" as IATA "Dangerous Goods."

Hazardous Waste - Any substance listed in 40 CFR, Subpart D (~~y~~261.30 et seq.), or otherwise characterized as ignitable, corrosive, reactive, or toxic (as defined by Toxicity Characteristic Leaching Procedure, TCLP, analysis) as specified under 40 CFR, Subpart C (~~y~~261.20 et seq.), that would be subject to manifest requirements specified in 40 CFR 262. Such substances are defined and regulated by EPA.

Marking - A descriptive name, identification number, instructions, cautions, weight, specification or UN marks, or combination thereof required on outer packaging of hazardous materials.

n.o.i - Not otherwise indicated (may be used interchangeably with n.o.s.).

n.o.s. - Not otherwise specified.

ORM - Other regulated material (see DOT 49 CFR 173.144).

Packaging - A receptacle and any other components or materials necessary for compliance with the minimum packaging requirements of 49 CFR 174, including containers (other than freight containers or overpacks), portable tanks, cargo tanks, tank cars, and multi-unit tank-car tanks to perform a containment function in conformance with the minimum packaging requirements of 49 CFR 173.24(a) & (b).

Placard - Color-coded, pictorial sign which depicts the hazard class symbol and name and which is placed on the side of a vehicle transporting certain hazardous materials.

Common Preservatives:

- Hydrochloric Acid - HCl
- Sulfuric Acid - H_2SO_4
- Nitric Acid - HNO_3
- Sodium Hydroxide - NaOH

Other Preservatives

- Zinc Acetate
- Sodium Thiosulfate - $Na_2S_2O_3$

Normality (N) - Concentration of a solution expressed as equivalent per liter, an equivalent being the amount of a substance containing 1 gram-atom of replaceable hydrogen or its equivalent.

Reportable Quantity (RQ) - For the purposes of this SOP, means the quantity specified in column 3 of the Appendix to DOT 49 CFR §172.101 for any material identified in column 1 of the appendix. A spill greater than the amount specified must be reported to the National Response Center.

Sample - A sample is physical evidence collected from a facility or the environment, which is representative of conditions at the location and time of collection.

4.0 RESPONSIBILITIES

Field Operations Leader - Directly responsible for the bottling, preservation, labeling, packaging, shipping, and custody of samples up to and including release to the shipper.

Field Samplers - Responsible for initiating the Chain-of-Custody Record (per SOP SA-6.3), implementing the packaging and shipping requirements, and maintaining custody of samples until they are relinquished to another custodian or to the shipper.

5.0 PROCEDURES

Sample identification, labeling, documentation, and chain-of-custody are addressed by SOP SA-6.3.

5.1 Sample Containers

Different types of chemicals react differently with sample containers made of various materials. For example, trace metals adsorb more strongly to glass than to plastic, whereas many organic chemicals may dissolve various types of plastic containers. Attachments A and B show proper containers (as well as other information) per 40 CFR 136. In general, the sample container shall allow approximately 5-10 percent air space ("ullage") to allow for expansion/vaporization if the sample warms during transport. However, for collection of volatile organic compounds, head space shall be omitted. The analytical laboratory will generally provide certified-clean containers for samples to be analyzed for chemical constituents. Shelby tubes or other sample containers are generally provided by the driller for samples requiring geotechnical analysis. Sufficient lead time shall be allowed for a delivery of sample container orders. Therefore, it is critical to use the correct container to maintain the integrity of the sample prior to analysis.

Once opened, the container must be used at once for storage of a particular sample. Unused but opened containers are to be considered contaminated and must be discarded. Because of the potential for introduction of contamination, they cannot be reclosed and saved for later use. Likewise, any unused

containers which appear contaminated upon receipt, or which are found to have loose caps or a missing Teflon liner (if required for the container), shall be discarded.

5.2 Sample Preservation

Many water and soil samples are unstable and therefore require preservation to prevent changes in either the concentration or the physical condition of the constituent(s) requiring analysis. Although complete and irreversible preservation of samples is not possible, preservation does retard the chemical and biological changes that inevitably take place after the sample is collected. Preservation techniques are usually limited to pH control, chemical addition(s), and refrigeration/ freezing (certain biological samples only).

5.2.1 Overview

The preservation techniques to be used for various analytes are listed in Attachments A and B. Reagents required for sample preservation will either be added to the sample containers by the laboratory prior to their shipment to the field or be added in the field (in a clean environment). Only high purity reagents shall be used for preservation. In general, aqueous samples of low-concentration organics (or soil samples of low- or medium-concentration organics) are cooled to 4°C. Medium-concentration aqueous samples, high-hazard organic samples, and some gas samples are typically not preserved. Low-concentration aqueous samples for metals are acidified with HNO_3, whereas medium-concentration and high-hazard aqueous metal samples are not preserved. Low- or medium-concentration soil samples for metals are cooled to 4°C, whereas high-hazard samples are not cooled.

The following subsections describe the procedures for preparing and adding chemical preservatives. Attachments A and B indicate the specific analytes which require these preservatives.

5.2.2 Preparation and Addition of Reagents

Addition of the following acids or bases may be specified for sample preservation; these reagents shall be analytical reagent (AR) grade or purer and shall be diluted to the required concentration with deionized water before field sampling commences. To avoid uncontrolled reactions, be sure to Add Acid to water (not vice versa). A dilutions guide is provided below.

Acid/Base	Dilution	Concentration	Estimated Amount Required for Preservation
Hydrochloric Acid (HCl)	1 part concentrated HCl: 1 part double-distilled, deionized water	6N	5-10 mL
Sulfuric Acid (H_2SO_4)	1 part concentrated H_2SO_4: 1 part double-distilled, deionized water	18N	2 - 5 mL
Nitric Acid (HNO_3)	Undiluted concentrated HNO_3	16N	2 - 5 mL
Sodium Hydroxide (NaOH)	400 grams solid NaOH dissolved in 870 mL double-distilled, deionized water; yields 1 liter of solution	10N	2 mL

The amounts required for preservation shown in the above table assumes proper preparation of the preservative and addition of the preservative to one liter of aqueous sample. This assumes that the sample is initially at pH 7, is poorly buffered, and does not contain particulate matter; as these conditions vary, more preservative may be required. Consequently, the final sample pH must be checked using narrow-range pH paper, as described in the generalized procedure detailed below:

- Pour off 5-10 mL of sample into a dedicated, clean container. Use some of this sample to check the initial sample pH using wide range (0-14) pH paper. Never dip the pH paper into the sample; always apply a drop of sample to the pH paper using a clean stirring rod or pipette.

- Add about one-half of the estimated preservative required to the original sample bottle. Cap and invert gently several times to mix. Check pH (as described above) using medium range pH paper (pH 0-6 or pH 7.5-14, as applicable).

- Cap sample bottle and seal securely.

Additional considerations are discussed below:

- To test if ascorbic acid must be used to remove oxidizing agents present in the sample before it can be properly preserved, place a drop of sample on KI-starch paper. A blue color indicates the need for ascorbic acid addition.

  If required, add a few crystals of ascorbic acid to the sample and retest with the KI-starch paper. Repeat until a drop of sample produces no color on the KI-starch paper. Then add an additional 0.6 grams of ascorbic acid per each liter of sample volume.

  Continue with proper base preservation of the sample as described above.

- Samples for sulfide analysis must be treated by the addition of 4 drops (0.2 mL) of 2N zinc acetate solution per 100 ml of sample.

  The 2N zinc acetate solution is made by dissolving 220 grams of zinc acetate in 870 mL of double-distilled, deionized water to make 1 liter of solution.

  The sample pH is then raised to 9 using the NaOH preservative.

- Sodium thiosulfate must be added to remove residual chlorine from a sample. To test the sample for residual chlorine use a field test kit specially made for this purpose.

  If residual chlorine is present, add 0.08 grams of sodium thiosulfate per liter of sample to remove the residual chlorine.

  Continue with proper acidification of the sample as described above.

For biological samples, 10% buffered formalin or isopropanol may also be required for preservation. Questions regarding preservation requirements should be resolved through communication with the laboratory before sampling begins.

5.3 Field Filtration

At times, field-filtration may be required to provide for the analysis of dissolved chemical constituents. Field-filtration must be performed prior to the preservation of samples as described above. General procedures for field filtration are described below:

- The sample shall be filtered through a non-metallic, 0.45-micron membrane filter, immediately after collection. The filtration system shall consist of dedicated filter canister, dedicated tubing, and a peristaltic pump with pressure or vacuum pumping squeeze action (since the sample is filtered by mechanical peristalsis, the sample travels only through the tubing).

- To perform filtration, thread the tubing through the peristaltic pump head. Attach the filter canister to the discharge end of the silicon tubing (note flow direction arrow); attach the aqueous sample container to the intake end of the silicon tubing. Turn the peristaltic pump on and perform filtration. Run approximately 100 ml of sample through the filter prior to sample collection.

- Continue by preserving the filtrate (contained in the filter canister), as applicable and generally described above.

5.4 Sample Packaging and Shipping

Samples collected for shipment from a site shall be classified as either environmental or hazardous material samples. Samples from drums containing materials other than Investigative Derived Waste (IDW) and samples obtained from waste piles or bulk storage tanks are generally shipped as hazardous materials. A distinction must be made between the two types of samples in order to:

- Determine appropriate procedures for transportation of samples (if there is any doubt, a sample shall be considered hazardous and shipped accordingly.)

- Protect the health and safety of transport and laboratory personnel receiving the samples (special precautions are used by the shipper and at laboratories when hazardous materials are received.)

Detailed procedures for packaging environmental and hazardous material samples are outlined in the remainder of this section.

5.4.1 Environmental Samples

Environmental samples are packaged as follows:

- Place properly identified sample container, with lid securely fastened, in a plastic bag (e.g. Ziploc baggie), and seal the bag.

- Place sample in a cooler constructed of sturdy material which has been lined with a large, plastic (e.g. "garbage" bag). Drain plugs on coolers must be taped shut.

- Pack with enough noncombustible, absorbent, cushioning materials such as vermiculite (shoulders of bottles must be iced if required) to minimize the possibility of the container breaking.

- If cooling is required (see Attachments A and B), double-bag ice in Ziploc baggies and place around sample container shoulders, and on top of absorbent packing material (minimum of 8 pounds of ice for a medium-size cooler).

- Seal (i.e., tape or tie top in knot) large liner bag.

- The original (top, signed copy) and extra carbonless copies of the COC form shall be placed inside a large Ziploc-type bag and taped inside the lid of the shipping cooler. If multiple coolers are sent but are included on one COC form, the COC form should be sent with the first cooler. The COC form should then state how many coolers are included with that shipment.

- Close and seal outside of cooler as described in SOP SA-6.3. Signed custody seals must be used.

Coolers must be marked as containing "Environmental Samples." The appropriate side of the container must be marked "This End Up" and arrows placed appropriately. No DOT marking or labeling is required; there are no DOT restrictions on mode of transportation.

5.4.2 Hazardous Material Samples

Samples not determined to be environmental samples, or samples known or expected to contain hazardous materials, must be considered hazardous material samples and transported according to the requirements listed below.

NOTE: Packaging and shipping of hazardous materials can only be performed by personnel who have participated in the TtNUS training course "Shipping Hazardous Materials" (or equivalent training approved by Health Sciences).

5.4.2.1 Known Substances

If the substance in the sample is known or can be identified, package, mark, label, and ship according to the specific instructions for that material (if it is listed) in the DOT Hazardous Materials Table (49 CFR 172.101) or the IATA List of Dangerous Goods Table (IATA Dangerous Goods Regulations). DOT Guide for shippers can be found in Attachment D of this document.

To determine the proper shipping name, use the following steps to help locate the shipping name on the Hazardous Materials Table, DOT 49 CFR 172.101.

1. Look first for the chemical or technical name of the material, for example, ethyl alcohol. Note that many chemicals have more than one technical name, for example, perchloroethylene (not listed in 172.101) is listed as tetrachloroethylene (listed 172.101). It may be useful to consult Health Sciences or a chemist for all possible technical names a material can have. If your material is not listed by its technical name, then . . .

2. Look for the chemical family name. For example, pentyl alcohol is not listed but the chemical family name is: alcohol, n.o.s. (not otherwise specified). If the chemical family name is not listed, then . . .

3. Look for a generic name based on end use. For example, Paint, n.o.s. If a generic name based on end use is not listed, then . . .

4. Look for a generic family name based on end use, for example, drugs, n.o.s. or cosmetics, n.o.s. Finally, if your material is not listed by a generic family name but you suspect or know the material is hazardous because it meets the definition of one or more hazardous classes, then . . .

5. You will have to use the general hazard class for a proper shipping name. For example, Flammable Liquid, n.o.s, or Oxidizer, n.o.s.

If you have any doubt regarding the proper shipping name, contact Health Sciences in Pittsburgh, Pennsylvania for assistance.

5.4.2.2 Unknown Substances

For samples of hazardous substances that are not listed on the Hazardous Materials Table, or are of unknown content, the shipper is required to:

1. Determine that the substance is not forbidden for shipment. Items forbidden include explosives (solid and liquid), substances liable to produce a dangerous evolution of heat or gas, and listed "unusual" compounds (which TtNUS fortunately does not typically handle). If the substance is in any way atypical of routine shipments, contact Health Sciences for further information on determining if the substance is forbidden.

2. Classify the substance by assessing whether it is anticipated to exhibit any unusual physical properties as defined by DOT (flammability, explosivity, etc.). If the substance has more than one hazard, follow the hazardous materials classification scheme identified in Attachment C of this SOP.

3. Use the generic or "n.o.s." proper shipping name that most accurately describes the article or substance. There are two types of general proper shipping names:

   - Generic, e.g., Alcohols, n.o.s. *
   - Hazard description, e.g., Flammable liquid, n.o.s.*

   Generic or n.o.s. proper shipping names marked with an "*" require the addition of the technical name in parenthesis () immediately following the proper shipping name. For example, most of our instrument calibration gases are not listed by name and must be declared under the most accurately descriptive name, which is "Compressed Gas, n.o.s. (Mixture Nitrogen and Oxygen)".

The correct shipping classification for an unknown sample is therefore selected through a process of elimination as described above (and detailed in 49 CFR 172.101(c)(11). By using the provisions in this paragraph, the proper shipping name and description will be determined. A step-by-step guide is provided by the DOT and can be found in Attachment D of this SOP. Again, if you have any doubt regarding the proper shipping name, contact Health Sciences for assistance.

5.4.3 Packaging and Shipping of Samples Classified as Flammable Liquid (or Solid)

5.4.3.1 <u>Packaging</u>

Applying the word "flammable" to a sample does not necessarily mean that it is in fact flammable. The word prescribes the class of packaging according to DOT regulations and classification schemes. The DOT defines flammable liquids as substances with a flash point less than 140°F (60°C). For shipping purposes, liquids with a flash point exceeding 95°F (35°C) need not be considered as flammable liquids if they are miscible solutions and have a water content of more than 90% by weight. For solutions classified as flammable liquids:

1. Containerize sample as required (see Attachments A and B). To prevent leakage, fill container no more than 90 percent full. Seal lid with teflon tape or wire.

2. Complete sample label and attach securely to sample container.

3. Seal container and place in 2-mil-thick (or thicker) polyethylene bag (e.g., Ziploc baggie), one sample per bag. Position sample identification label so that it can be read through bag. Seal bag.

4. For soil jars, place sealed bag inside metal can (available from laboratory or laboratory supplier) and cushion it with enough noncombustible, absorbent material (for example, vermiculite or diatomaceous earth) between the bottom and sides of the can and bag to prevent breakage and absorb leakage. Pack one bag per can. Use clips, tape, or other positive means to hold can lid securely, tightly and permanently. Mark can as indicated in Paragraph 1 of Section 5.3.4.2, below. Single 1-gallon bottles do not need to be placed in metal cans.

5. Place one or more metal cans (or a single 1-gallon bottle) into a strong outside container, such as a metal picnic cooler or a DOT-approved fiberboard box. Surround cans (or bottle) with noncombustible, absorbent cushioning materials for stability during transport. The absorbent material should be able to absorb the entire contents of the container. Mark container as indicated in Paragraph 2 below.

5.4.3.2 Marking/Labeling

1. Use abbreviations only where specified. Place the following information, either hand-printed or in label form, on the metal can (or 1-gallon bottle):

   - Laboratory name and address.
   - Proper shipping name from the hazardous materials table (DOT Regulation CFR 49 172.101). Example: "Flammable Liquid, n.o.s. (with the technical name in parentheses).

2. Determine packing group. The packing group must be included on the shipping papers in the description section. Packaging groups are classified as follows:

   Group I. Most Hazardous
   Group II. Medium Hazard
   Group III. Least Hazardous

   The packing group will be listed in the hazardous materials table, column 5.

3. Place the following information on outside shipping container per the instructions provided in the "Shipping Hazardous Materials" course:

   - Proper shipping name
   - UN or NA number
   - Proper label(s)
   - Addressee and sender

For flammable liquids, the following are the proper labels to be placed on the outside shipping container:

- DOT "Flammable liquid" label
- Package orientation label (arrows pointing upward) on at least two opposite sides of the package
- "Cargo Aircraft Only" label if shipping more than 30L of flammable liquids in the package.

5.4.3.3 Shipping Papers

Principally because of limitations in sample holding times, TtNUS almost exclusively uses air transportation to ship hazardous materials and other environmental samples. The "Dangerous Goods Airbill" is the shipping paper used to document the information associated with the shipment. As identified previously, only personnel who have participated in "Shipping Hazardous Materials" training (or equivalent course) are authorized to prepare hazardous materials for shipment - including preparation of associated shipping papers. Included in this training are instructions on what specific information is to be provided on the Airbill for hazardous materials typically shipped by TtNUS. Refer to the training course Student Manual or contact Health Sciences for this information.

The properly executed Chain-of-Custody Report must be included in the container. Use custody seals.

Using the Airbill of our common carrier (i.e., Federal Express) as an example, the following instructions apply to the information to be provided under "Transport Details", "Nature and Quantity of Dangerous Goods", and other associated fields.

a) Transport Details

- Select "Passenger and Cargo" or "Cargo Aircraft Only" (This is based on the type and quantity of dangerous goods you are shipping). X-out the non-applicable selection.
- Airport of Departure - Enter the full name of the airport or city of departure.
- Airport of Destination - Enter the full name of the airport or city of destination.

b) Shipment Type – Delete the option that does not apply (Non-Radioactive/Radioactive)

c) Nature and Quantity of Dangerous Goods

1. Dangerous Goods Identification

   - Proper Shipping Name - List the proper shipping name (this is the name as it appears on the List of Dangerous Goods Table and NOT the product or trade name), and if applicable, the technical name in parenthesis.
   - Class or Division - List the class or division number and, if applicable, compatibility group.
   - UN or ID No - List the UN or I.D. number, preceded with "UN" or "I.D." This selection may change when shipping in accordance with 49 CFR regulations that permit the shipment under NA (North American Continental Shipments) designations for certain substances.
   - Packing Group – List the appropriate packing group, if applicable. This is the level of anticipated hazard of the shipment. It does not apply for all shipments. When no information is available, leave the space blank.
   - Subsidiary Risk – List the class or division number of the subsidiary risk, if applicable. The subsidiary risk is any additional hazard beyond the most significant (or primary) hazard. This information is obtained from the List of Dangerous Goods Table.

2. Quantity and Type of Packaging – List the number of packages, the type of package, and the net quantity in each package. The type of packaging you are shipping the hazardous material in is presented first, followed by the amount (Kg, L, etc.). For example, "1 fiberboard box X 2 Kg". When no outer packaging is identified, the packaging selected must provide limited protection of the inner packaging by securing and cushioning during shipment. NOTE: Always use the package that the hazardous material was shipped to the site in. If it is not available, contact the Health Sciences Department in Pittsburgh for further instruction.

3. Packing Instructions – Enter the Packing Instruction number. These instructions are provided in Section 5 of the IATA Dangerous Goods Regulations. They provide the exact type of packaging required by the industry for various hazard classes. When no addition packaging considerations are given, the shipper may use their best judgment for the shipment of an identified substance and/or article.

4. Authorization – List the words " Limited Quantity," if applicable; list any special provision(s) or approval(s) if applicable. This section provides for exceptions to this transportation regulation and the conditions for those exceptions.

d) Additional handling Information - Enter any required special handling information.

e) Prepared for Air Transport according to: Check the ICAO/IATA box.

f) Emergency Telephone Number - Enter the 24-hour emergency contact number. This number is required of all US Origin or Destination Shipments. List the number for InfoTRAC (1-800-535-5053). InfoTRAC is a company retained by TtNUS to provide 24-Hour Emergency Hotline service for dangerous goods shipment. This company has MSDSs for the substances routinely shipped by TtNUS. They provide information to FedEx or any other emergency responders, should situations arise with one of our shipments. In addition, they have telephone numbers of certain Tetra Tech NUS Health Science Department personnel in the Pittsburgh Office in the event of an emergency.

g) Name/Title of the Signatory - Enter name and job title (Field Operations Leader, Geologist, Health & Safety Specialist, etc.)

h) Place and date - Enter the city and date of shipment

i) Signature - Sign the form (must be a complete signature). All alterations must be signed with the same signature used to sign the declaration.

5.4.3.4 Transportation

1. The majority of unknown hazardous substance samples will be classified as flammable liquids. The samples will be transported by rented or common carrier truck, railroad, or express overnight package services. Do not transport samples on any passenger-carrying air transport system, even if the system has cargo-only aircraft. DOT regulations permit regular airline cargo-only aircraft, but difficulties with most suggest avoiding them. Instead, ship by airline carriers that carry only cargo. If unsure of what mode of transportation to use, consult Health Sciences.1

2. For transport by government-owned vehicle, including aircraft, DOT regulations do not apply. However, procedures described above, with the exception of execution of the bill of lading with certification, shall still be followed.

3. Use the hazardous materials shipping check list (Attachment E) as a guidance to ensure that all sample-handling requirements are satisfied.

4. In some cases, various materials may react if they break during shipment. To determine if you are shipping such materials, refer to the DOT compatibility chart in Attachment F.

5.5 Shipment of Lithium Batteries

Monitoring well data are analyzed using either the Hermit SE 1000 or the Hermit SE 2000 environmental data logger. These instruments are typically powered by lithium batteries in sufficient quantity to make the unit subject to hazardous material shipping requirements. The DOT determined that lithium batteries are to be shipped using the following information:

---

1 Note: If you are unsure as how to ship the sample (hazardous or environmental sample), contact Health Sciences so that a decision can be made as to the proper shipping practices. The DOT and IATA penalties for improper shipment of a hazardous material are stringent and may include a prison term for intentional violations.

- Product Designation
  - Hermit SE 1000
  - Hermit SE 2000

- Proper Shipping Name
  - Lithium batteries, contained in equipment, UN3091

- UN No - UN-3091

- Classification or Division
  - Class 9

Shipment of equipment containing lithium batteries must be accompanied by shipping papers completed as indicated in Attachment G. The instrument will be shipped by Federal Express as a Hazardous Material. Place the instrument in the same container in which it was received. This container or case is a DOT-approved shipping container. For Federal Express procedures to ship hazardous materials, call 1-800-238-5355, extension 922-1666. In most cases, the return shipping papers and DOT labels will be shipped to you from the company warehouse or the vendor. An example of the types of labels used for shipment and the wording are shown in Attachment G. These labels will be attached to the outside container and include all the information noted under Section 5.4.3.2. Instead of the Flammable Liquid information, however, the following will be presented with the following wording:

- Lithium Batteries Contained in Equipment
  - UN-3091

- DOT Miscellaneous Hazardous Materials (Class 9) label

- "Cargo Aircraft Only" label

6.0 REFERENCES

American Public Health Association, 1981. Standard Methods for the Examination of Water and Wastewater, 15th Edition. APHA, Washington, D.C.

International Air Transport Association (latest issue). Dangerous Goods Regulations, Montreal, Quebec, Canada.

U.S. Department of Transportation (latest issue). Hazardous Materials Regulations, 49 CFR 171-177.

U.S. EPA, 1984. "Guidelines Establishing Test Procedures for the Analysis of Pollutants under Clean Water Act." Federal Register, Volume 49 (209), October 26, 1984, p. 43234.

U.S. EPA, 1979. Methods for Chemical Analysis of Water and Wastes. EPA-600/4-79-020, U.S. EPA-EMSL, Cincinnati, Ohio.

ATTACHMENT A

GENERAL SAMPLE CONTAINER AND PRESERVATION REQUIREMENTS

Sample Type and Concentration			Container[1]	Sample Size	Preservation[2]	Holding Time[2]
WATER						
Organics (GC&GC/MS)	VOC	Low	Borosilicate glass	2 x 40 mL	Cool to 4°C HCl to ≤ 2	14 days[9]
	Extractables SVOCs and pesticide/PCBs)	(Low	Amber glass	2x2 L or 4x1 L	Cool to 4°C	7 days to extraction; 40 days after extraction
	Extractables SVOCs and pesticide/PCBs)	(Medium	Amber glass	2x2 L or 4x1 L	None	7 days to extraction; 40 days after extraction
Inorganics	Metals	Low	High-density polyethylene	1 L	HNO_3 to pH ≤2	6 months (Hg-28 days)
		Medium	Wide-mouth glass	16 oz.	None	6 months
	Cyanide	Low	High-density polyethylene	1 L	NaOH to pH>12	14 days
	Cyanide	Medium	Wide-mouth glass	16 oz.	None	14 days
Organic/ Inorganic	High Hazard		Wide-mouth glass	8 oz.	None	14 days
SOIL						
Organics (GC&GC/MS)	VOC		Wide-mouth glass with teflon liner	2 x 4 oz.	Cool to 4°C	14 days
	Extractables SVOCs and pesticides/PCBs)	(Low	Wide-mouth glass	8 oz.	Cool to 4°C	14 days to extraction; 40 days after extraction
	Extractables SVOCs and pesticides/PCBs)	(Medium	Wide-mouth glass	8 oz.	Cool to 4°C	14 days to extraction; 40 days after extraction
Inorganics	Low/Medium		Wide-mouth glass	8 oz.	Cool to 4°C	6 months (Hg - 28 days) Cyanide (14 days)
Organic/Inorganic	High Hazard		Wide-mouth glass	8 oz.	None	NA
Dioxin/Furan	All		Wide-mouth glass	4 oz.	None	7 days until extraction; 40 days after extraction
TCLP	All		Wide-mouth glass	8 oz.	None	7 days until preparation; analysis as per fraction
AIR						
Volatile Organics	Low/Medium		Charcoal tube – 7 cm long, 6 mm OD, 4 mm ID	100 L air	Cool to 4°C	5 days recommended

1 All glass containers should have Teflon cap liners or septa.
2 See Attachment E. Preservation and maximum holding time allowances per 40 CFR 136.

ATTACHMENT B

ADDITIONAL REQUIRED CONTAINERS, PRESERVATION TECHNIQUES, AND HOLDING TIMES

Parameter Number/Name	Container[1]	Preservation[2][3]	Maximum Holding Time[4]
INORGANIC TESTS:			
Acidity	P, G	Cool, 4°C	14 days
Alkalinity	P, G	Cool, 4°C	14 days
Ammonia - Nitrogen	P, G	Cool, 4°C; H_2SO_4 to pH 2	28 days
Biochemical Oxygen Demand (BOD)	P, G	Cool, 4°C	48 hours
Bromide	P, G	None required	28 days
Chemical Oxygen Demand (COD)	P, G	Cool, 4°C; H_2SO_4 to pH 2	28 days
Chloride	P, G	None required	28 days
Chlorine, Total Residual	P, G	None required	Analyze immediately
Color	P, G	Cool, 4°C	48 hours
Cyanide, Total and Amenable to Chlorination	P, G	Cool, 4°C; NaOH to pH 12; 0.6 g ascorbic acid[5]	14 days[6]
Fluoride	P	None required	28 days
Hardness	P, G	HNO_3 to pH 2; H_2SO_4 to pH 2	6 months
Total Kjeldahl and Organic Nitrogen	P, G	Cool, 4°C; H_2SO_4 to pH 2	28 days
Nitrate - Nitrogen	P, G	None required	48 hours
Nitrate-Nitrite - Nitrogen	P, G	Cool, 4°C; H_2SO_4 to pH 2	28 days
Nitrite - Nitrogen	P, G	Cool, 4°C	48 hours
Oil & Grease	G	Cool, 4°C; H_2SO_4 to pH 2	28 days
Total Organic Carbon (TOC)	P, G	Cool, 4°C; HCl or H_2SO_4 to pH 2	28 days
Orthophosphate	P, G	Filter immediately; Cool, 4°C	48 hours
Oxygen, Dissolved-Probe	G Bottle & top	None required	Analyze immediately
Oxygen, Dissolved-Winkler	G Bottle & top	Fix on site and store in dark	8 hours
Phenols	G	Cool, 4°C; H_2SO_4 to pH 2	28 days
Phosphorus, Total	P, G	Cool, 4°C; H_2SO_4 to pH 2	28 days
Residue, Total	P, G	Cool, 4°C	7 days
Residue, Filterable (TDS)	P, G	Cool, 4°C	7 days
Residue, Nonfilterable (TSS)	P, G	Cool, 4°C	7 days
Residue, Settleable	P, G	Cool, 4°C	48 hours
Residue, Volatile (Ash Content)	P, G	Cool, 4°C	7 days
Silica	P	Cool, 4°C	28 days
Specific Conductance	P, G	Cool, 4°C	28 days
Sulfate	P, G	Cool, 4°C	28 days

ATTACHMENT B
ADDITIONAL REQUIRED CONTAINERS, PRESERVATION TECHNIQUES, AND HOLDING TIMES
PAGE TWO

Parameter Number/Name	Container[1]	Preservation[2][3]	Maximum Holding Time[4]
INORGANIC TESTS (Cont'd):			
Sulfide	P, G	Cool, 4°C; add zinc acetate plus sodium hydroxide to pH 9	7 days
Sulfite	P, G	None required	Analyze immediately
Turbidity	P, G	Cool, 4°C	48 hours
METALS:[7]			
Chromium VI (Hexachrome)	P, G	Cool, 4°C	24 hours
Mercury (Hg)	P, G	HNO_3 to pH 2	28 days
Metals, except Chromium VI and Mercury	P, G	HNO_3 to pH 2	6 months
ORGANIC TESTS:[8]			
Purgeable Halocarbons	G, Teflon-lined septum	Cool, 4°C; 0.008% $Na_2S_2O_3$[5]	14 days
Purgeable Aromatic Hydrocarbons	G, Teflon-lined septum	Cool, 4°C; 0.008% $Na_2S_2O_3$[5] HCl to pH 2 [9]	14 days
Acrolein and Acrylonitrile	G, Teflon-lined septum	Cool, 4°C; 0.008% $Na_2S_2O_3$[5] adjust pH to 4-5 [10]	14 days
Phenols[11]	G, Teflon-lined cap	Cool, 4°C; 0.008% $Na_2S_2O_3$[5]	7 days until extraction; 40 days after extraction
Benzidines[11],[12]	G, Teflon-lined cap	Cool, 4°C; 0.008% $Na_2S_2O_3$[5]	7 days until extraction[13]
Phthalate esters[11]	G, Teflon-lined cap	Cool, 4°C	7 days until extraction; 40 days after extraction
Nitrosamines[11],[14]	G, Teflon-lined cap	Cool, 4°C; store in dark; 0.008% $Na_2S_2O_3$[5]	7 days until extraction; 40 days after extraction
PCBs[11]	G, Teflon-lined cap	Cool, 4°C	7 days until extraction; 40 days after extraction
Nitroaromatics & Isophorone[11]	G, Teflon-lined cap	Cool, 4°C; 0.008% $Na_2S_2O_3$[5]; store in dark	7 days until extraction; 40 days after extraction
Polynuclear Aromatic Hydrocarbons (PAHs)[11],[14]	G, Teflon-lined cap	Cool, 4°C; 0.008% $Na_2S_2O_3$[5]; store in dark	7 days until extraction; 40 days after extraction
Haloethers[11]	G, Teflon-lined cap	Cool, 4°C; 0.008% $Na_2S_2O_3$[5]	7 days until extraction; 40 days after extraction
Dioxin/Furan (TCDD/TCDF)[11]	G, Teflon-lined cap	Cool, 4°C; 0.008% $Na_2S_2O_3$[5]	7 days until extraction; 40 days after extraction

ATTACHMENT B
ADDITIONAL REQUIRED CONTAINERS, PRESERVATION TECHNIQUES, AND HOLDING TIMES
PAGE THREE

(1) Polyethylene (P): generally 500 ml or Glass (G): generally 1L.
(2) Sample preservation should be performed immediately upon sample collection. For composite chemical samples each aliquot should be preserved at the time of collection. When use of an automated sampler makes it impossible to preserve each aliquot, then chemical samples may be preserved by maintaining at 4°C until compositing and sample splitting is completed.
(3) When any sample is to be shipped by common carrier or sent through the United States Mail, it must comply with the Department of Transportation Hazardous Materials Regulations (49 CFR Part 172).
(4) Samples should be analyzed as soon as possible after collection. The times listed are the maximum times that samples may be held before analysis and still be considered valid. Samples may be held for longer periods only if the permittee, or monitoring laboratory, has data on file to show that the specific types of samples under study are stable for the longer periods, and has received a variance from the Regional Administrator.
(5) Should only be used in the presence of residual chlorine.
(6) Maximum holding time is 24 hours when sulfide is present. Optionally, all samples may be tested with lead acetate paper before pH adjustments are made to determine if sulfide is present. If sulfide is present, it can be removed by the addition of cadmium nitrate powder until a negative spot test is obtained. The sample is filtered and then NaOH is added to pH 12.
(7) Samples should be filtered immediately on site before adding preservative for dissolved metals.
(8) Guidance applies to samples to be analyzed by GC, LC, or GC/MS for specific compounds.
(9) Sample receiving no pH adjustment must be analyzed within 7 days of sampling.
(10) The pH adjustment is not required if acrolein will not be measured. Samples for acrolein receiving no pH adjustment must be analyzed within 3 days of sampling.
(11) When the extractable analytes of concern fall within a single chemical category, the specified preservative and maximum holding times should be observed for optimum safeguard of sample integrity. When the analytes of concern fall within two or more chemical categories, the sample may be preserved by cooling to 4°C, reducing residual chlorine with 0.008% sodium thiosulfate, storing in the dark, and adjusting the pH to 6-9; samples preserved in this manner may be held for 7 days before extraction and for 40 days after extraction. Exceptions to this optional preservation and holding time procedure are noted in footnote 5 (re: the requirement for thiosulfate reduction of residual chlorine) and footnotes 12, 13 (re: the analysis of benzidine).
(12) If 1,2-diphenylthydrazine is likely to be present, adjust the pH of the sample to 4.0±0.2 to prevent rearrangement to benzidine.
(13) Extracts may be stored up to 7 days before analysis if storage is conducted under an inert (oxidant-free) atmosphere.
(14) For the analysis of diphenylnitrosamine, add 0.008% $Na_2S_2O_3$ and adjust pH to 7-10 with NaOH within 24 hours of sampling.
(15) The pH adjustment may be performed upon receipt at the laboratory and may be omitted if the samples are extracted within 72 hours of collection. For the analysis of aldrin, add 0.008% $Na_2S_2O_3$.

ATTACHMENT C

DOT HAZARDOUS MATERIAL CLASSIFICATION (49 CFR 173.2a)

1. Radioactive material (except a limited quantity)
2. Division 2.3, Poisonous Gases
3. Division 2.1, Flammable Gas
4. Division 2.2, Nonflammable gas
5. Division 6.1, Poisonous Liquids, Packing Group 1 (poison by inhalation only)
6. Division 4.2, Pyrophoric Material
7. Division 4.1, Self-Reactive Material
8. Class 3, Flammable Liquids*
9. Class 8, Corrosive Material
10. Division 4.1, Flammable Solid*
11. Division 4.2, Spontaneously Combustible Materials*
12. Division 4.3, Dangerous When Wet Materials*
13. Division 5.1, Oxidizers*
14. Division 6.1, Poisonous Liquids or Solids (other than Packing Group 1)*
15. Combustible liquid
16. Class 9, Miscellaneous Hazardous Materials

* If a material has or meets the criteria for more than one hazard class, use the precedence of hazardous table on the following page for Classes 3 and 8 and Divisions 4.1, 4.2, 4.3, 5.1, and 6.1. The following table ranks those materials that meet the definition of Classes 3 and 8 and Divisions 4.1, 4.2, 4.3, 5.1, and 6.1.

ATTACHMENT C (Continued)

DOT HAZARDOUS MATERIAL CLASSIFICATION (49 CFR 173.2a)

Class	Packing Group	4.2	4.3	5.1 I[a]	5.1 II[a]	5.1 III[a]	6.1 I (Dermal)	6.1 I (Oral)	6.1 II	6.1 III	8 I (Liquid)	8 I (Solid)	8 II (Liquid)	8 II (Solid)	8 III (Liquid)	8 III (Solid)
3	I						3	3	3	3	3	[c]	3	[c]	3	[c]
3	II						3	3	3	3	8	[c]	3	[c]	3	[c]
3	III						6.1	6.1	6.1	3[d]	8	[c]	8	[c]	3	[c]
4.1	II[b]	4.2	4.3	5.1	4.1	4.1	6.1	6.1	4.1	4.1	[c]	8	[c]	4.1	[c]	4.1
4.1	III[b]	4.2	4.3	5.1	4.1	4.1	6.1	6.1	6.1	4.1	[c]	8	[c]	8	[c]	4.1
4.2	II		4.3	5.1	4.2	4.2	6.1	6.1	4.2	4.2	[c]	8	[c]	4.2	[c]	4.2
4.2	III		4.3	5.1	4.2	4.2	6.1	6.1	6.1	4.2	[c]	8	[c]	8	[c]	4.2
4.3	I			5.1	4.3	4.3	6.1	4.3	4.3	4.3	4.3	4.3	4.3	4.3	4.3	4.3
4.3	II			5.1	4.3	4.3	6.1	4.3	4.3	4.3	8	8	8	4.3	4.3	4.3
4.3	III			5.1	4.3	4.3	6.1	6.1	6.1	4.3	8	8	8	8	4.3	4.3
5.1	I[a]						5.1	5.1	5.1	5.1	5.1	5.1	5.1	5.1	5.1	5.1
5.1	II[a]						6.1	5.1	5.1	5.1	8	8	8	5.1	5.1	5.1
5.1	III[a]						6.1	6.1	6.1	5.1	8	8	8	8	5.1	5.1
6.1	I, Dermal										8	6.1	6.1	6.1	6.1	6.1
6.1	I, Oral										8	6.1	6.1	6.1	6.1	6.1
6.1	II, Inhalation										8	6.1	6.1	6.1	6.1	6.1
6.1	II, Dermal										8	6.1	8	6.1	6.1	6.1
6.1	II, Oral										8	8	8	6.1	6.1	6.1
6.1	III										8	8	8	8	8	8

(a) There are at present no established criteria for determining Packing Groups for liquids in Division 5.1. At present, the degree of hazard is to be assessed by analogy with listed substances, allocating the substances to Packing Group I, Great; Group II, Medium; or Group III, Minor Danger.

(b) Substances of Division 4.1 other than self-reactive substances.

(c) Denotes an impossible combination.

(d) For pesticides only, where a material has the hazards of Class 3, Packing Group III, and Division 6.1, Packing Group III, the primary hazard is Division 6.1, Packing Group III.

ATTACHMENT D

GUIDE FOR HAZARDOUS MATERIALS SHIPPERS

USE OF GUIDE - This guide is presented as an aid to shippers of hazardous materials. It does not contain or refer to all of the DOT requirements for shipping hazardous materials. For specific details, refer to all of the DOT requirements for shipping hazardous materials, as provided in the Code of Federal Regulations (CFR), Title 49, Transportation, Parts 100-199.

The following is offered as a step-by-step procedure to aid in compliance with the applicable DOT regulations.

STEP 1 - DETERMINE THE PROPER SHIPPING NAME. The shipper must determine the proper shipping name of the materials as listed in the Hazardous Materials Table, 49 CFR 172.101, Column (2).

STEP 2 - DETERMINE THE HAZARD CLASS OR CLASSES.

a. Refer to the Table, 49 CFR 172.101, Column (3), and locate the hazard class of the material.
b. If more than one class is shown for the proper shipping name, determine the proper class by definition.
c. If the materials have more than one hazard, classify the material based on the order of hazards in 49 CFR 173.2.

STEP 3 - SELECT THE PROPER IDENTIFICATION NUMBERS.

a. Refer to the Table, 49 CFR 172.101, Column (3a), and select the Identification Number (ID) that corresponds to the proper shipping name and hazard class.
b. Enter the ID number(s) on the shipping papers and display them, as required, on packagings, placards and/or orange panels.

STEP 4 - DETERMINE THE MODE(S) OF TRANSPORT TO ULTIMATE DESTINATION.

a. As a shipper, you must assure yourself that the shipment complies with various modal requirements.
b. The modal requirements may affect the following: (1) Packaging; (2) Quantity per Package; (3) Marking; (4) Labeling; (5) Shipping Papers; and (6) Certification.

STEP 5 - SELECT THE PROPER LABEL(S) AND APPLY AS REQUIRED.

a. Refer to the Table, 49 CFR 172.101, Column (4) for required labels.
b. For details on labeling refer to (1) Additional Labels, 49 CFR 172.402; (2) Placement of Labels, 49 CFR 172.406; (3) Packagings (Mixed or Consolidated), 49 CFR 172.404(a) and (h); (4) Packages Containing Samples, 49 CFR 172.402(h); (5) Radioactive Materials, 49 CFR 172.403; and (6) Authorized Label Modifications, 49 CFR 172.405.

STEP 6 - DETERMINE AND SELECT THE PROPER PACKAGES.

a. Refer to the Table, 49 CFR 172.101, Column (5a) for exceptions and Column (5b) for specification packagings. Consider the following when selecting an authorized package: Quantity per Package; Cushioning Material, if required; Proper Closure and Reinforcement; Proper Pressure; Outage; etc., as required.
b. If packaged by a prior shipper, make sure the packaging is correct and in proper condition for transportation.

ATTACHMENT D (Continued)
GUIDE FOR HAZARDOUS MATERIALS SHIPPERS

STEP 7 - MARK THE PACKAGING (INCLUDING OVERPACKS).

a. Apply the required markings (49 CFR 172.300); Proper shipping name and ID number, when required (49 CFR 172.301); Name and address of Consignee or Consignor (49 CFR 172.306).
b. For details and other required markings, see 49 CFR 172.300 through 172.338.

STEP 8 - PREPARE THE SHIPPING PAPERS.

a. The basic requirements for preparing shipping papers include Proper Shipping Name; Hazard Class; ID Number; Total Quantity; Shipper's Certification; and Emergency Response Telephone Number.
b. Make all entries on the shipping papers using the information required and in proper sequence (49 CFR 172.202).

STEP 9 - CERTIFICATION.

a. Each shipper must certify by printing (manually or mechanically) on the shipping papers that the materials being offered for shipment are properly classified, described, packaged, marked and labeled, and in proper condition for transportation according to the applicable DOT Regulations (49 CFR 172.202).

STEP 10 - LOADING, BLOCKING, AND BRACING. When hazardous materials are loaded into the transport vehicle or freight container, each package must be loaded, blocked, and braced in accordance with the requirements for mode of transport.

a. If the shipper loads the freight container or transport vehicle, the shipper is responsible for the proper loading, blocking, and bracing of the materials.
b. If the carrier does the loading, the carrier is responsible.

STEP 11 - DETERMINE THE PROPER PLACARD(S). Each person who offers hazardous materials for transportation must determine that the placarding requirements have been met.

a. For Highway, unless the vehicle is already correctly placarded, the shipper must provide the required placard(s) and required ID number(s) (49 CFR 172.506).
b. For Rail, if loaded by the shipper, the shipper must placard the rail car if placards are required (49 CFR 172.508).
c. For Air and Water shipments, the shipper has the responsibility to apply the proper placards.

STEP 12 - HAZARDOUS WASTE/HAZARDOUS SUBSTANCE.

a. If the material is classed as a hazardous waste or hazardous substance, most of the above steps will be applicable.
b. Pertinent Environmental Protection Agency regulations are found in the Code of Federal Regulations, Title 40, Part 262.

As a final check and before offering the shipment for transportation, visually inspect the shipment. The shipper should ensure that emergency response information is on the vehicle for transportation of hazardous materials.

NOTE: This material may be reproduced without special permission from this office.

Revised March 1995.

ATTACHMENT E

HAZARDOUS MATERIALS SHIPPING CHECK LIST

PACKAGING

1. Check DOT 173.24 for appropriate type of package for hazardous substance.
2. Check for container integrity, especially the closure.
3. Check for sufficient absorbent material in package.
4. Check for sample tags and log sheets for each sample and for chain-of-custody record.

SHIPPING PAPERS

1. Check that entries contain only approved DOT abbreviations.
2. Check that entries are in English.
3. Check that hazardous material entries are specially marked to differentiate them from any nonhazardous materials being sent using same shipping paper.
4. Be careful that all hazardous classes are shown for multiclass materials.
5. Check total amounts by weight, quantity, or other measures used.
6. Check that any limited-quantity exemptions are so designated on the shipping paper.
7. Check that certification is signed by shipper.
8. Make certain driver signs for shipment.

RCRA MANIFEST

1. Check that approved state/federal manifests are prepared.
2. Check that transporter has the following: valid EPA identification number, valid driver's license, valid vehicle registration, insurance protection, and proper DOT labels for materials being shipped.
3. Check that destination address is correct.
4. Check that driver knows where shipment is going.
5. Check that the driver is aware of emergency procedures for spills and accidents.
6. Make certain driver signs for shipment.
7. Make certain one copy of executed manifest and shipping document is retained by shipper.

ATTACHMENT F
DOT SEGREGATION AND SEPARATON CHART

Class or Division	Notes	1.1-1.2	1.3	1.4	1.5	1.6	2.1	2.2	2.3 gas Zone A*	2.3 gas Zone B*	3	4.1	4.2	4.3	5.1	5.2	6.1 liquids PG-I Zone A*	7	8 liquids only
Explosives... 1.1 and 1.2	A	*	*	*	*	*	X	X	X	X	X	X	X	X	X	X	X	X	X
Explosives..... 1.3		*	*	*	*	*	X		X	X	X		X	X	X	X	X		X
Explosives..... 1.4		*	*	*	*	*	O		O	O	O		O				O		O
Very insensitive explosives 1.5	A	*	*	*	*	*	X	X	X	X	X	X	X	X	X	X	X	X	X
Extremely insensitive explosives 1.6		*	*	*	*	*													
Flammable gases 2.1		X	X	O	X				X	O							O	O	
Non-toxic, non-flammable gases 2.2		X			X														
Poisonous gas - Zone A** 2.3		X	X	O	X		X				X	X	X	X	X	X			X
Poisonous gas - Zone B** 2.3		X	X	O	X		O				O	O	O	O	O	O			O
Flammable liquids..... 3		X	X	O	X				X	O					O		X		
Flammable solids..... 4.1		X			X				X	O							X		O
Spontaneously combustible materials 4.2		X	X	O	X				X	O							X		X
Dangerous-when-wet materials 4.3		X	X		X				X	O							X		O
Oxidizers..... 5.1	A	X	X		X				X	O	O						X		O
Organic peroxides.... 5.2		X	X		X				X	O							X		O
Poisonous liquids PG I - Zone A** 6.1		X	X	O	X		O				X	X	X	X	X	X			X
Radioactive materials . 7		X			X		O												
Corrosive liquids 8		X	X	O	X				X	O		O	X	O	O	O	X		

No entry means that the materials are compatible (have no restrictions).

X These materials may not be loaded, transported, or stored together in the same vehicle or facility.
O The materials may not be loaded, transported, or stored together in the same vehicle or facility unless they are separated for 4 feet on all sides.
* Check the explosives compatibility chart in 49 CFR 179.848(f).
A Ammonium nitrate fertilizers may be stored with Division 1.1 materials.
** Denotes inhalation hazardous for poisons; consult field team leader or project manager if you encounter a material in this class
1 before shipment.

ATTACHMENT G
LITHIUM BATTERY SHIPPING PAPERS

3224637861

TRANSPORT DETAILS

This shipment is within the limitations prescribed for: *(delete non applicable)*

[redacted] | CARGO AIRCRAFT ONLY

Airport of Departure:

Airport of Destination: 19CYS

Two completed and signed copies of this Declaration must be handed to the operator.

WARNING

Failure to comply in all respects with the applicable Dangerous Goods Regulations may be in breach of the applicable law, subject to legal penalties. This Declaration must not, in any circumstances, be completed and/or signed by a consolidator, a forwarder or an IATA cargo agent.

Shipment type: *(delete non-applicable)* NON-RADIOACTIVE | [redacted]

NATURE AND QUANTITY OF DANGEROUS GOODS

Dangerous Goods Identification						
Proper Shipping Name	Class or Division	UN or ID No.	Subsidiary Risk	Quantity and type of packing	Packing Inst.	Authorization
LITHIUM BATTERIES CONTAINED IN EQUIPMENT	9	UN3091		1 PLASTIC BOX X 55 GRAMS	912 II	PER CA-9206009

Additional Handling Information

1 HERMIT SERIES DATALOGGER X 55 GRAMS (11 GRAMS/CELL)

I hereby declare that the contents of this consignment are fully and accurately described above by proper shipping name and are classified, packed, marked, and labeled, and are in all respects in the proper condition for transport by air according to the applicable International and National Government Regulations.

Name/Title of Signatory

Place and Date

Signature *(see warning above)*

Emergency Telephone Number (Required for US Origin or Destination Shipments)
800-535-5053

IF ACCEPTABLE FOR PASSENGER AIRCRAFT, THIS SHIPMENT CONTAINS RADIOACTIVE MATERIAL INTENDED FOR USE IN, OR INCIDENT TO, RESEARCH, MEDICAL DIAGNOSIS, OR TREATMENT.

ATTACHMENT G (CONTINUED)
LITHIUM BATTERY SHIPPING PAPERS

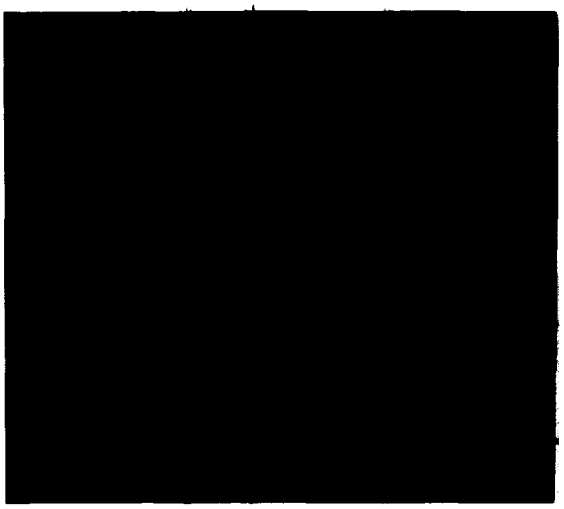

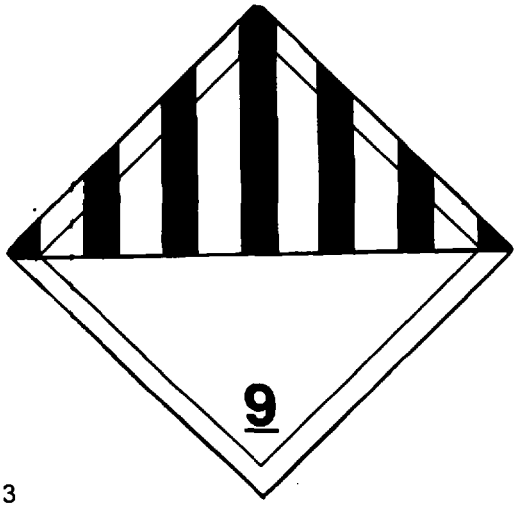

3

LITHIUM BATTERIES CONTAINED IN EQUIPMENT.
UN-3091.
SHIPPED UNDER CA-9206009

TETRA TECH NUS, INC.	STANDARD OPERATING PROCEDURES	Number SA-1.3	Page 1 of 18
		Effective Date 06/99	Revision 6
		Applicability Tetra Tech NUS, Inc.	
		Prepared Earth Sciences Department	
Subject SOIL SAMPLING		Approved D. Senovich	

TABLE OF CONTENTS

SECTION **PAGE**

1.0 PURPOSE **2**

2.0 SCOPE **2**

3.0 GLOSSARY **2**

4.0 RESPONSIBILITIES **3**

5.0 PROCEDURES **3**

5.1 OVERVIEW 3
5.2 SOIL SAMPLE COLLECTION 4
5.2.1 Procedure for Collecting Soil Samples for Volatile Organic Compounds 4
5.2.2 Procedure for Collecting Non-Volatile Soil Samples 6
5.2.3 Procedure for Collecting Undisturbed Soil Samples (ASTM D1587-83) 6
5.3 SURFACE SOIL SAMPLING 7
5.4 NEAR-SURFACE SOIL SAMPLING 8
5.5 SUBSURFACE SOIL SAMPLING WITH A HAND AUGER 8
5.6 SUBSURFACE SOIL SAMPLING WITH A SPLIT-BARREL SAMPLER (ASTM D1586-84) 9
5.7 SUBSURFACE SOL SAMPLING USING DIRECT PUSH TECHNOLOGY 10
5.8 EXCAVATION AND SAMPLING OF TEST PITS AND TRENCHES 10
5.8.1 Applicability 10
5.8.2 Test Pit and Trench Excavation 11
5.8.3 Sampling in Test Pits and Trenches 12
5.8.4 Backfilling of Trenches and Test Pits 15
5.9 RECORDS 16

6.0 REFERENCES **16**

ATTACHMENTS

A SPLIT-SPOON SAMPLER 17
B REMOTE SAMPLE HOLDER FOR TEST PIT/TRENCH SAMPLING 18

1.0 PURPOSE

This procedure discusses the methods used to collect surface, near surface, and subsurface soil samples. Additionally, it describes the method for sampling of test pits and trenches to determine subsurface soil and rock conditions, and recover small-volume or bulk samples.

2.0 SCOPE

This procedure is applicable to the collection of surface, near surface and subsurface soils for laboratory testing, which are exposed through hand digging, hand augering, drilling, or machine excavating at hazardous substance sites.

3.0 GLOSSARY

Composite Sample - A composite sample exists as a combination of more than one sample at various locations and/or depths and times, which is homogenized and treated as one sample. This type of sample is usually collected when determination of an average waste concentration for a specific area is required. Composite samples are not to be collected for volatile organics analysis.

Grab Sample - One sample collected at one location and at one specific time.

Non-Volatile Sample - A non-volatile sample includes all other chemical parameters (e.g., semivolatiles, pesticides/PCBs, metals, etc.) and those engineering parameters that do not require undisturbed soil for their analysis.

Hand Auger - A sampling device used to extract soil from the ground in a relatively undisturbed form.

Thin-Walled Tube Sampler - A thin-walled metal tube (also called a Shelby tube) used to recover relatively undisturbed soil samples. These tubes are available in various sizes, ranging from 2 to 5 inches outside diameter (OD) and from 18 to 54 inches in length.

Split-Barrel Sampler - A steel tube, split in half lengthwise, with the halves held together by threaded collars at either end of the tube. Also called a split-spoon sampler, this device can be driven into resistant materials using a drive weight mounted in the drilling string. A standard split-barrel sampler is typically available in two common lengths, providing either 20-inch or 26-inch longitudinal clearance for obtaining 18-inch or 24-inch-long samples, respectively. These split-barrel samplers commonly range in size from 2-inch OD to 3-1/2 inch OD. The larger sizes are commonly used when a larger volume of sample material is required.

Test Pit and Trench - Open, shallow excavations, typically rectangular (if a test pit) or longitudinal (if a trench), excavated to determine the shallow subsurface conditions for engineering, geological, and soil chemistry exploration and/or sampling purposes. These pits are excavated manually or by machine (e.g., backhoe, clamshell, trencher excavator, or bulldozer).

Confined Space - As stipulated in 29 CFR 1910.146, a confined space means a space that: 1) is large enough and so configured that an employee can bodily enter and perform assigned work; 2) has limited or restricted means for entry or exit (for example tanks, vessels, silos, storage bins, hoppers, vaults, and pits, and excavations are spaces that may have limited means of entry.); and 3) is not designed for continuous employee occupancy. TtNUS considers all confined space as permit-required confined spaces.

4.0 RESPONSIBILITIES

Project Manager - The Project Manager is responsible for determining sampling objectives, as well as, the field procedures used in the collection of soil samples. Additionally, in consultation with other project personnel (geologist, hydrogeologist, etc.), the Project Manager establishes the need for test pits or trenches, and determines their approximate locations and dimensions.

Site Safety Officer (SSO) - The SSO (or a qualified designee) is responsible for providing the technical support necessary to implement the project Health and Safety Plan. This will include (but not be limited to) performing air quality monitoring during sampling, boring and excavation activities, and to ensure that workers and offsite (downwind) individuals are not exposed to hazardous levels of airborne contaminants. The SSO/designee may also be required to advise the FOL on other safety-related matters regarding boring, excavation and sampling, such as mitigative measures to address potential hazards from unstable trench walls, puncturing of drums or other hazardous objects, etc.

Field Operations Leader (FOL) - The FOL is responsible for finalizing the location of surface, near surface, and subsurface (hand and machine borings, test pits/trenches) soil samples. He/she is ultimately responsible for the sampling and backfilling of boreholes, test pits and trenches, and for adherence to OSHA regulations during these operations.

Project Geologist/Sampler - The project geologist/sampler is responsible for the proper acquisition of soil samples and the completion of all required paperwork (i.e., sample log sheets, field notebook, boring logs, test pit logs, container labels, custody seals, and chain-of-custody forms).

Competent Person - A Competent Person, as defined in 29 CFR 1929.650 of Subpart P - Excavations, means one who is capable of identifying existing and predictable hazards in the surroundings, or working conditions which are unsanitary, hazardous, or dangerous to employees, and who has authorization to take prompt corrective measures to eliminate them.

5.0 PROCEDURES

5.1 Overview

Soil sampling is an important adjunct to groundwater monitoring. Sampling of the soil horizons above the groundwater table can detect contaminants before they have migrated into the water table, and can establish the amount of contamination sorbed on aquifer solids that have the potential of contributing to groundwater contamination.

Soil types can vary considerably on a hazardous waste site. These variations, along with vegetation, can affect the rate of contaminant migration through the soil. It is important, therefore, that a detailed record be maintained during the sampling operations, particularly noting the location, depth, and such characteristics as grain size, color, and odor. Subsurface conditions are often stable on a daily basis and may demonstrate only slight seasonal variation especially with respect to temperature, available oxygen and light penetration. Changes in any of these conditions can radically alter the rate of chemical reactions or the associated microbiological community, thus further altering specific site conditions. As a result, samples must be kept at their at-depth temperature or lower, protected from direct light, sealed tightly in approved glass containers, and be analyzed as soon as possible.

The physical properties of the soil, its grain size, cohesiveness, associated moisture, and such factors as depth to bedrock and water table, will limit the depth from which samples can be collected and the method required to collect them. Often this information on soil properties can be obtained from published soil

surveys available through the U.S. Geological Surveys and other government or farm agencies. It is the intent of this procedure to present the most commonly employed soil sampling methods used at hazardous waste sites.

5.2 Soil Sample Collection

5.2.1 Procedure for Collecting Soil Samples for Volatile Organic Compounds

The above described traditional sampling techniques, used for the collection of soil samples for volatile organic analysis, have recently been evaluated by the scientific community and determined to be ineffective in producing accurate results (biased low) due to the loss of volatile organics in the sampling stages and microbial degradation of aromatic volatiles. One of the newly adopted sampling procedures for collecting soil samples includes the field preservation of samples with methanol or sodium bisulfate to minimize volatilization and biodegradation. These preservation methods may be performed either in the field or laboratory, depending on the sampling methodology employed.

Soil samples to be preserved by the laboratory are currently being performed using method SW-846, 5035. Laboratories are currently performing low level analyses (sodium bisulfate preservation) and high level analyses (methanol preservation) depending on the end users needs.

It should be noted that a major disadvantage of the methanol preservation method is that the laboratory reporting limits will be higher than conventional testing. The reporting levels using the new method for most analytes are 0.5 µg/g for GC/MS and 0.05 µg/g for GC methods.

The alternative preservation method for collecting soil samples is with sodium bisulfate. This method is more complex to perform in the field and therefore is not preferred for field crews. It should also be noted that currently, not all laboratories have the capabilities to perform this analysis. The advantage to this method is that the reporting limits (0.001 µg/g for GC/PID or GC/ELCD, or 0.010 for GC/MS) are lower than those described above.

The following procedures outline the necessary steps for collecting soil samples to be preserved at the laboratory, and for collecting soil samples to be preserved in the field with methanol or sodium bisulfate.

5.2.1.1 Soil Samples to be Preserved at the Laboratory

Soil samples collected for volatile organics that are to be preserved at the laboratory will be obtained using a hermetically sealed sample vial such as an EnCore™ sampler. Each sample will be obtained using a reusable sampling handle provided with the EnCore™ sampler. The sample is collected by pushing the EnCore™ sampler directly into the soil, ensuring that the sampler is packed tight with soil, leaving zero headspace. Using this type of sampling device eliminates the need for field preservation and the shipping restrictions associated with preservatives.

Once the sample is collected, it should be placed on ice immediately and shipped to the laboratory within 48 hours (following the chain-of-custody and documentation procedures outlined in SOP SA-6.1). Samples must be preserved by the laboratory within 48 hours of sample collection.

If the lower detection limits are necessary, an option would be to collect several EnCore™ samplers at a given sample location. Send all samplers to the laboratory and the laboratory can perform the required preservation and analyses.

5.2.1.2 Soil Samples to be Preserved in the Field

Soil samples preserved in the field may be prepared for analyses using both the low-level (sodium bisulfate preservation) method and medium-level (methanol preservation) method.

Methanol Preservation (Medium Level):

Soil samples to be preserved in the field with methanol will utilize 40-60 mL glass vials with septum lids. Each sample bottle will be filled with 25 mL of demonstrated analyte-free purge and trap grade methanol. Bottles may be prespiked with methanol in the laboratory or prepared in the field.

Soil will be collected with the use of a decontaminated (or disposable), small-diameter coring device such as a disposable tube/plunger-type syringe with the tip cut off. The outside diameter of the coring device must be smaller than the inside diameter of the sample bottle neck.

A small electronic balance or manual scale will be necessary for measuring the volume of soil to be added to the methanol preserved sample bottle. Calibration of the scale should be performed prior to use and intermittently throughout the day according to the manufacturers requirements.

The sample should be collected by pulling the plunger back and inserting the syringe into the soil to be sampled. The top several inches of soil should be removed before collecting the sample. Approximately 10 grams $\pm$2g (8-12 grams) of soil should be collected. The sample should be weighed and adjusted until obtaining the required amount of sample. The sample weight should be recorded to the nearest 0.01 gram in the field logbook and/or sample log sheet. The soil should then be extruded into the methanol preserved sample bottle taking care not to contact the sample container with the syringe. The threads of the bottle and cap must be free of soil particles.

After capping the bottle, swirl the sample (do not shake) in the methanol and break up the soil such that all of the soil is covered with methanol. Place the sample on ice immediately and prepare for shipment to the laboratory as described in SOP SA-6.1.

Sodium Bisulfate Preservation (Low Level):

Samples to be preserved using the sodium bisulfate method are to be prepared as follows:

Add 1 gram of sodium bisulfate to 5 mL of laboratory grade deionized water in a 40-60 mL glass vial with septum lid. Bottles may be prespiked in the laboratory or prepared in the field. The soil sample should be collected in a manner as described above and added to the sample container. The sample should be weighed to nearest 0.01 gram as described above and recorded in field logbook or sample log sheet.

Care should be taken when adding the soil to the sodium bisulfate solution. A chemical reaction of soils containing carbonates (limestone) may cause the sample to effervesce or the vial to possibly explode.

When preparing samples using the sodium bisulfate preservation method, duplicate samples must be collected using the methanol preservation method on a one for one sample basis. The reason for this is because it is necessary for the laboratory to perform both the low level and medium level analyses. Place the sample on ice immediately and prepare for shipment to the laboratory as described in SOP SA-6.1.

If the lower detection limits are necessary, an option to field preserving with sodium bisulfate would be to collect 3 EnCore™ samplers at a given sample location. Send all samplers to the laboratory and the laboratory can perform the required preservation and analyses.

5.2.2 Procedure for Collecting Non-Volatile Soil Samples

Non-volatile soil samples may be collected as either grab or composite samples. The non-volatile soil sample is thoroughly mixed in a stainless steel or disposable, inert plastic tray, using a stainless steel trowel or other approved tool, then transferred into the appropriate sample container(s). Head space is permitted in a non-volatile soil sample container to allow for sample expansion.

5.2.3 Procedure for Collecting Undisturbed Soil Samples (ASTM D1587-83)

When it is necessary to acquire undisturbed samples of soil for purposes of engineering parameter analysis (e.g., permeability), a thin-walled, seamless tube sampler (Shelby tube) will be employed. The following method will be used:

1. Remove all surface debris (e.g., vegetation, roots, twigs, etc.) from the specific sampling location and drill and clean out the borehole to the sampling depth, being careful to minimize the chance for disturbance of the material to be sampled. In saturated material, withdraw the drill bit slowly to prevent loosening of the soil around the borehole and to maintain the water level in the hole at or above groundwater level.

2. The use of bottom discharge bits or jetting through an open-tube sampler to clean out the borehole shall not be allowed. Use of any side-discharge bits is permitted.

3. A stationary piston-type sampler may be required to limit sample disturbance and aid in retaining the sample. Either the hydraulically operated or control rod activated-type of stationary piston sampler may be used. Prior to inserting the tube sampler into the borehole, check to ensure that the sampler head contains a check valve. The check valve is necessary to keep water in the rods from pushing the sample out the tube sampler during sample withdrawal and to maintain a suction within the tube to help retain the sample.

4. To minimize chemical reaction between the sample and the sampling tube, brass tubes may be required, especially if the tube is stored for an extended time prior to testing. While steel tubes coated with shellac are less expensive than brass, they're more reactive, and shall only be used when the sample will be tested within a few days after sampling or if chemical reaction is not anticipated. With the sampling tube resting on the bottom of the hole and the water level in the boring at groundwater level or above, push the tube into the soil by a continuous and rapid motion, without impacting or twisting. In no case shall the tube be pushed farther than the length provided for the soil sample. Allow about 3 inches in the tube for cuttings and sludge.

5. Upon removal of the sampling tube from the hole, measure the length of sample in the tube and also the length penetrated. Remove disturbed material in the upper end of the tube and measure the length of sample again. After removing at least an inch of soil from the lower end and after inserting an impervious disk, seal both ends of the tube with at least a 1/2-inch thickness of wax applied in a way that will prevent the wax from entering the sample. Clean filler must be placed in voids at either end of the tube prior to sealing with wax. Place plastic caps on the ends of the sample tube, tape the caps in place, and dip the ends in wax.

6. Affix label(s) to the tube as required and record sample number, depth, penetration, and recovery length on the label. Mark the "up" direction on the side of the tube with indelible ink, and mark the end of the sample. Complete Chain-of-Custody and other required forms (see SOP SA-6.3). Do not allow tubes to freeze, and store the samples vertically with the same orientation they had in the

ground, (i.e., top of sample is up) in a cool place out of the sun at all times. Ship samples protected with suitable resilient packing material to reduce shock, vibration, and disturbance.

Thin-walled undisturbed tube samplers are restricted in their usage by the consistency of the soil to be sampled. Often, very loose and/or wet samples cannot be retrieved by the samplers, and soils with a consistency in excess of very stiff cannot be penetrated by the sampler. Devices such as Dennison or Pitcher core samplers can be used to obtain undisturbed samples of stiff soils. Using these devices normally increases sampling costs, and therefore their use shall be weighed against the need for acquiring an undisturbed sample.

5.3 Surface Soil Sampling

The simplest, most direct method of collecting surface soil samples (most commonly collected to a depth of 6 inches) for subsequent analysis is by use of a stainless steel trowel. Surface soils are considered 0-12 inches bgs.

In general, the following equipment is necessary for obtaining surface soil samples:

- Stainless steel or pre-cleaned disposable trowel.
- Real-time air monitoring instrument (e.g., PID, FID, etc.).
- Latex gloves.
- Required Personal Protective Equipment (PPE).
- Required paperwork.
- Required decontamination equipment.
- Required sample container(s).
- Wooden stakes or pin flags.
- Sealable polyethylene bags (i.e., Ziploc® baggies).
- Heavy duty cooler.
- Ice (if required) double-bagged in sealable polyethylene bags.
- Chain-of-custody records and custody seals.

When acquiring surface soil samples, the following procedure shall be used:

1. Carefully remove vegetation, roots, twigs, litter, etc., to expose an adequate soil surface area to accommodate sample volume requirements.

2. Using a decontaminated stainless steel trowel, follow the procedure cited in Section 5.2.1 for collecting a volatile soil sample. Surface soil samples for volatile organic analysis should be collected from 6-12 inches bgs only.

3. Thoroughly mix (in-situ) a sufficient amount of soil to fill the remaining sample containers and transfer the sample into those containers utilizing the same stainless steel trowel employed above. Cap and securely tighten all sample containers.

4. Affix a sample label to each container. Be sure to fill out each label carefully and clearly, addressing all the categories described in SOP SA-6.3.

5. Proceed with the handling and processing of each sample container as described in SOP SA-6.2.

5.4 Near-Surface Soil Sampling

Collection of samples from near the surface (depth of 6-18 inches) can be accomplished with tools such as shovels and stainless steel or pre-cleaned disposable trowels.

The following equipment is necessary to collect near surface soil samples:

- Clean shovel.
- The equipment listed under Section 5.3 of this procedure.
- Hand auger.

To obtain near-surface soil samples, the following protocol shall be observed:

1. With a clean shovel, make a series of vertical cuts to the depth required in the soil to form a square approximately 1 foot by 1 foot.

2. Lever out the formed plug and scrape the bottom of the freshly dug hole with a decontaminated stainless steel or pre-cleaned disposable trowel to remove any loose soil.

3. Follow steps 2 through 5 listed under Section 5.3 of this procedure.

5.5 Subsurface Soil Sampling With a Hand Auger

A hand augering system generally consists of a variety of all stainless steel bucket bits (i.e., cylinders 6-1/2" long, and 2-3/4", 3-1/4", and 4" in diameter), a series of extension rods (available in 2', 3', 4' and 5' lengths), and a cross handle. A larger diameter bucket bit is commonly used to bore a hole to the desired sampling depth and then withdrawn. In turn, the larger diameter bit is replaced with a smaller diameter bit, lowered down the hole, and slowly turned into the soil at the completion depth (approximately 6"). The apparatus is then withdrawn and the soil sample collected.

The hand auger can be used in a wide variety of soil conditions. It can be used to sample soil both from the surface, or to depths in excess of 12 feet. However, the presence of rock layers and the collapse of the borehole normally contribute to its limiting factors.

To accomplish soil sampling using a hand augering system, the following equipment is required:

- Complete hand auger assembly (variety of bucket bit sizes).
- Stainless steel mixing bowls.
- The equipment listed under Section 5.3 of this procedure.

To obtain soil samples using a hand auger, the following procedure shall be followed:

1. Attach a properly decontaminated bucket bit to a clean extension rod and further attach the cross handle to the extension rod.

2. Clear the area to be sampled of any surface debris (vegetation, twigs, rocks, litter, etc.).

3. Begin augering (periodically removing accumulated soils from the bucket bit) and add additional rod extensions as necessary. Also, note (in a field notebook or on standardized data sheets) any changes in the color, texture or odor of the soil.

4. After reaching the desired depth, slowly and carefully withdraw the apparatus from the borehole.

5. Remove the soiled bucket bit from the rod extension and replace it with another properly decontaminated bucket bit. The bucket bit used for sampling is commonly smaller in diameter than the bucket bit employed to initiate the borehole.

6. Carefully lower the apparatus down the borehole. Care must be taken to avoid scraping the borehole sides.

7. Slowly turn the apparatus until the bucket bit is advanced approximately 6 inches.

8. Discard the top of the core (approximately 1"), which represents any loose material collected by the bucket bit before penetrating the sample material.

9. Fill volatile sample container(s), using a properly decontaminated stainless steel trowel, with sample material directly from the bucket bit. Refer to Section 5.2.1 of this procedure.

10. Utilizing the above trowel, remove the remaining sample material from the bucket bit and place into a properly decontaminated stainless steel mixing bowl and thoroughly homogenize the sample material prior to filling the remaining sample containers. Refer to Section 5.2.2 of this procedure.

11. Follow steps 4 and 5 listed under Section 5.3 of this procedure.

5.6 Subsurface Soil Sampling With a Split-Barrel Sampler (ASTM D1586-84)

Split-barrel (split-spoon) samplers consist of a heavy carbon steel or stainless steel sampling tube that can be split into two equal halves to reveal the soil sample (see Attachment A). A drive head is attached to the upper end of the tube and serves as a point of attachment for the drill rod. A removable tapered nosepiece/drive shoe attaches to the lower end of the tube and facilitates cutting. A basket-like sample retainer can be fitted to the lower end of the split tube to hold loose, dry soil samples in the tube when the sampler is removed from the drill hole. This split-barrel sampler is made to be attached to a drill rod and forced into the ground by means of a 140-lb. or larger casing driver.

Split-barrel samplers are used to collect soil samples from a wide variety of soil types and from depths greater than those attainable with other soil sampling equipment.

The following equipment is used for obtaining split-barrel samples:

- Drilling equipment (provided by subcontractor).
- Split-barrel samplers (O.D. 2 inches, I.D. 1-3/8 inches, either 20 inches or 26 inches long); Larger O.D. samplers are available if a larger volume of sample is needed.
- Drive weight assembly, 140-lb. weight, driving head and guide permitting free fall of 30 inches.
- Stainless steel mixing bowls.
- Equipment listed under Section 5.3 of this procedure.

The following steps shall be followed to obtain split-barrel samples:

1. Remove the drive head and nosepiece, and open the sampler to reveal the soil sample. Immediately scan the sample core with a real-time air monitoring instrument (e.g., FID, PID, etc.). Carefully separate the soil core, with a decontaminated stainless steel knife or trowel, at about 6-inch intervals while scanning the center of the core for elevated readings. Also scan stained soil, soil lenses, and anomalies (if present), and record readings.

2. Collect the volatile sample from the center of the core where elevated readings occurred. If no elevated readings where encountered the sample material should still be collected from the core's center (this area represents the least disturbed area with minimal atmospheric contact). Refer to Section 5.2.1 of this procedure.

3. Using the same trowel, remove remaining sample material from the split-barrel sampler (except for the small portion of disturbed soil usually found at the top of the core sample) and place the soil into a decontaminated stainless steel mixing bowl. Thoroughly homogenize the sample material prior to filling the remaining sample containers. Refer to Section 5.2.2 of this procedure.

4. Follow steps 4 and 5 listed under Section 5.3 of this procedure.

5.7 Subsurface Soil Sampling Using Direct Push Technology

Subsurface soil samples can be collected to depths of 40+ feet using direct push technology (DPT). DPT equipment, responsibilities, and procedures are described in SOP SA-2.5.

5.8 Excavation and Sampling of Test Pits and Trenches

5.8.1 Applicability

This subsection presents routine test pit or trench excavation techniques and specialized techniques that are applicable under certain conditions.

During the excavation of trenches or pits at hazardous waste sites, several health and safety concerns arise which control the method of excavation. No personnel shall enter any test pit or excavation except as a last resort, and then only under direct supervision of a Competent Person (as defined in 29 CFR 1929.650 of Subpart P - Excavations). Whenever possible, all required chemical and lithological samples should be collected using the excavator bucket or other remote sampling apparatus. If entrance is still required, all test pits or excavations must be stabilized by bracing the pit sides using specifically designed wooden or steel support structures. Personnel entering the excavation may be exposed to toxic or explosive gases and oxygen-deficient environments. Any entry may constitute a Confined Space and must be done in conformance with all applicable regulations. In these cases, substantial air monitoring is required before entry, and appropriate respiratory gear and protective clothing is mandatory. There must be at least two persons present at the immediate site before entry by one of the investigators. The reader shall refer to OSHA regulations 29 CFR 1926, 29 CFR 1910.120, 29 CFR 1910.134, AND 29 CFR 1910.146.

Excavations are generally not practical where a depth of more than about 15 feet is desired, and they are usually limited to a few feet below the water table. In some cases, a pumping system may be required to control water levels within the pit, providing that pumped water can be adequately stored or disposed. If data on soils at depths greater than 15 feet are required, the data are usually obtained through test borings instead of test pits.

In addition, hazardous wastes may be brought to the surface by excavation equipment. This material, whether removed from the site or returned to the subsurface, must be properly handled according to any and all applicable federal, state, and local regulations.

5.8.2 Test Pit and Trench Excavation

These procedures describe the methods for excavating and logging test pits and trenches excavated to determine subsurface soil and rock conditions. Test pit operations shall be logged and documented as described in SOP SA-6.3.

Test pits and trenches may be excavated by hand or by power equipment to permit detailed description of the nature and contamination of the in-situ materials. The size of the excavation will depend primarily on the following:

- The purpose and extent of the exploration.
- The space required for efficient excavation.
- The chemicals of concern.
- The economics and efficiency of available equipment.

Test pits normally have a cross section that is 4 to 10 feet square; test trenches are usually 3 to 6 feet wide and may be extended for any length required to reveal conditions along a specific line. The following table, which is based on equipment efficiencies, gives a rough guide for design consideration:

Equipment	Typical Widths, in Feet
Trenching machine	2
Backhoe	2-6
Track dozer	10
Track loader	10
Excavator	10
Scraper	20

The lateral limits of excavation of trenches and the position of test pits shall be carefully marked on area base maps. If precise positioning is required to indicate the location of highly hazardous waste materials, nearby utilities, or dangerous conditions, the limits of the excavation shall be surveyed. Also, if precise determination of the depth of buried materials is needed for design or environmental assessment purposes, the elevation of the ground surface at the test pit or trench location shall also be determined by survey. If the test pit/trench will not be surveyed immediately, it shall be backfilled and its position identified with stakes placed in the ground at the margin of the excavation for later surveying.

The construction of test pits and trenches shall be planned and designed in advance as much as possible. However, field conditions may necessitate revisions to the initial plans. The final depth and construction method shall be determined by the field geologist. The actual layout of each test pit, temporary staging area, and spoils pile will be predicated based on site conditions and wind direction at the time the test pit is made. Prior to excavation, the area can be surveyed by magnetometer or metal detector to identify the presence of underground utilities or drums.

As mentioned previously, no personnel shall enter any test pit or excavation except as a last resort, and then only under direct supervision of a Competent Person. If entrance is still required, Occupational Safety and Health Administration (OSHA) requirements must be met (e.g., walls must be braced with wooden or steel braces, ladders must be in the hole at all times, and a temporary guardrail must be placed along the surface of the hole before entry). It is emphasized that the project data needs should be structured such that required samples can be collected without requiring entrance into the excavation. For example, samples of leachate, groundwater, or sidewall soils can be taken with telescoping poles, etc.

Dewatering may be required to assure the stability of the side walls, to prevent the bottom of the pit from heaving, and to keep the excavation dry. This is an important consideration for excavations in cohesionless material below the groundwater table. Liquids removed as a result of dewatering operations must be handled as potentially contaminated materials. Procedures for the collection and disposal of such materials should be discussed in the site-specific project plans.

5.8.3 Sampling In Test Pits and Trenches

5.8.3.1 General

Test pits and trenches are usually logged as they are excavated. Records of each test pit/trench will be made as described in SOP SA-6.3. These records include plan and profile sketches of the test pit/trench showing materials encountered, their depth and distribution in the pit/trench, and sample locations. These records also include safety and sample screening information.

Entry of test pits by personnel is extremely dangerous, shall be avoided unless absolutely necessary, and can occur only after all applicable Health and Safety and OSHA requirements have been met.

The final depth and type of samples obtained from each test pit will be determined at the time the test pit is excavated. Sufficient samples are usually obtained and analyzed to quantify contaminant distribution as a function of depth for each test pit. Additional samples of each waste phase and any fluids encountered in each test pit may also be collected.

In some cases, samples of soil may be extracted from the test pit for reasons other than waste sampling and chemical analysis, for instance, to obtain geotechnical information. Such information would include soil types, stratigraphy, strength, etc., and could therefore entail the collection of disturbed (grab or bulk) or relatively undisturbed (hand-carved or pushed/driven) samples, which can be tested for geotechnical properties. The purposes of such explorations are very similar to those of shallow exploratory or test borings, but often test pits offer a faster, more cost-effective method of sampling than installing borings.

5.8.3.2 Sampling Equipment

The following equipment is needed for obtaining samples for chemical or geotechnical analysis from test pits and trenches:

- Backhoe or other excavating machinery.
- Shovels, picks and hand augers, stainless steel trowels.
- Sample container - bucket with locking lid for large samples; appropriate bottleware for chemical or geotechnical analysis samples.
- Polyethylene bags for enclosing sample containers; buckets.

- Remote sampler consisting of 10-foot sections of steel conduit (1-inch-diameter), hose clamps and right angle adapter for conduit (see Attachment B).

5.8.3.3 Sampling Methods

The methods discussed in this section refer to test pit sampling from grade level. If test pit entry is required, see Section 5.7.3.4.

- Excavate trench or pit in several depth increments. After each increment, the operator will wait while the sampler inspects the test pit from grade level to decide if conditions are appropriate for sampling. (Monitoring of volatiles by the SSO will also be used to evaluate the need for sampling.) Practical depth increments range from 2 to 4 feet.

- The backhoe operator, who will have the best view of the test pit, will immediately cease digging if:

- Any fluid phase or groundwater seepage is encountered in the test pit.

- Any drums, other potential waste containers, obstructions or utility lines are encountered.

- Distinct changes of material are encountered.

This action is necessary to permit proper sampling of the test pit and to prevent a breach of safety protocol. Depending upon the conditions encountered, it may be required to excavate more slowly and carefully with the backhoe.

For obtaining test pit samples from grade level, the following procedure shall be followed:

- Remove loose material to the greatest extent possible with backhoe.

- Secure walls of pit if necessary. (There is seldom any need to enter a pit or trench which would justify the expense of shoring the walls. All observations and samples should be taken from the ground surface.)

- Samples of the test pit material are to be obtained either directly from the backhoe bucket or from the material once it has been deposited on the ground. The sampler or Field Operations Leader directs the backhoe operator to remove material from the selected depth or location within the test pit/trench. The bucket is brought to the surface and moved away from the pit. The sampler and/or SSO then approaches the bucket and monitors its contents with a photoionization or flame ionization detector. The sample is collected from the center of the bucket or pile and placed in sample containers using a decontaminated stainless steel trowel or spatula.

- If a composite sample is desired, several depths or locations within the pit/trench are selected and a bucket is filled from each area. It is preferable to send individual sample bottles filled from each bucket to the laboratory for compositing under the more controlled laboratory conditions. However, if compositing in the field is required, each sample container shall be filled from materials that have been transferred into a mixing bucket and homogenized. Note that homogenization/compositing is not applicable for samples to be subjected to volatile organic analysis.

- Using the remote sampler shown in Attachment B, samples can be taken at the desired depth from the side wall or bottom of the pit. The face of the pit/trench shall first be scraped (using a long-

handled shovel or hoe) to remove the smeared zone that has contacted the backhoe bucket. The sample shall then be collected directly into the sample jar, by scraping with the jar edge, eliminating the need to utilize samplers and minimizing the likelihood of cross-contamination. The sample jar is then capped, removed from the assembly, and packaged for shipment.

- Complete documentation as described in SOP SA-6.3.

5.8.3.4 In-Pit Sampling

Under rare conditions, personnel may be required to enter the test pit/trench. This is necessary only when soil conditions preclude obtaining suitable samples from the backhoe bucket (e.g., excessive mixing of soils or wastes within the test pit/trench) or when samples from relatively small discrete zones within the test pit are required. This approach may also be necessary to sample any seepage occurring at discrete levels or zones in the test pit that are not accessible with remote samplers.

In general, personnel shall sample and log pits and trenches from the ground surface, except as provided for by the following criteria:

- There is no practical alternative means of obtaining such data.
- The Site Safety Officer and Competent Person determines that such action can be accomplished without breaching site safety protocol. This determination will be based on actual monitoring of the pit/trench after it is dug (including, at a minimum, measurements of volatile organics, explosive gases and available oxygen).
- A Company-designated Competent Person determines that the pit/trench is stable or is made stable (by grading the sidewalls or using shoring) prior to entrance of any personnel. OSHA requirements must be strictly observed.

If these conditions are satisfied, one person will enter the pit/trench. On potentially hazardous waste sites, this individual will be dressed in safety gear as required by the conditions in the pit, usually Level B. He/she will be affixed to a safety rope and continuously monitored while in the pit.

A second individual will be fully dressed in protective clothing including a self-contained breathing device and on standby during all pit entry operations. The individual entering the pit will remain therein for as brief a period as practical, commensurate with performance of his/her work. After removing the smeared zone, samples shall be obtained with a decontaminated trowel or spoon. As an added precaution, it is advisable to keep the backhoe bucket in the test pit when personnel are working below grade. Such personnel can either stand in or near the bucket while performing sample operations. In the event of a cave-in they can either be lifted clear in the bucket, or at least climb up on the backhoe arm to reach safety.

5.8.3.5 Geotechnical Sampling

In addition to the equipment described in Section 5.7.3.2, the following equipment is needed for geotechnical sampling:

- Soil sampling equipment, similar to that used in shallow drilled boring (i.e., open tube samplers), which can be pushed or driven into the floor of the test pit.

- Suitable driving (i.e., a sledge hammer) or pushing (i.e., the backhoe bucket) equipment which is used to advance the sampler into the soil.
- Knives, spatulas, and other suitable devices for trimming hand-carved samples.
- Suitable containers (bags, jars, tubes, boxes, etc.), labels, wax, etc. for holding and safely transporting collected soil samples.
- Geotechnical equipment (pocket penetrometer, torvane, etc.) for field testing collected soil samples for classification and strength properties.

Disturbed grab or bulk geotechnical soil samples may be collected for most soils in the same manner as comparable soil samples for chemical analysis. These collected samples may be stored in jars or plastic-lined sacks (larger samples), which will preserve their moisture content. Smaller samples of this type are usually tested for their index properties to aid in soil identification and classification, while larger bulk samples are usually required to perform compaction tests.

Relatively undisturbed samples are usually extracted in cohesive soils using open tube samplers, and such samples are then tested in a geotechnical laboratory for their strength, permeability and/or compressibility. The techniques for extracting and preserving such samples are similar to those used in performing Shelby tube sampling in borings, except that the sampler is advanced by hand or backhoe, rather than by a drill rig. Also, the sampler may be extracted from the test pit by excavation around the sampler when it is difficult to pull it out of the ground. If this excavation requires entry of the test pit, the requirements described in Section 5.7.3.4 of this procedure must be followed. The open tube sampler shall be pushed or driven vertically into the floor or steps excavated in the test pit at the desired sampling elevations. Extracting tube samples horizontally from the walls of the test pit is not appropriate, because the sample will not have the correct orientation.

A sledge hammer or the backhoe may be used to drive or push the sampler or tube into the ground. Place a piece of wood over the top of the sampler or sampling tube to prevent damage during driving/pushing of the sample. Pushing the sampler with a constant thrust is always preferable to driving it with repeated blows, thus minimizing disturbance to the sample. If the sample cannot be extracted by rotating it at least two revolutions (to shear off the sample at the bottom), hand-excavate to remove the soil from around the sides of the sampler. If hand-excavation requires entry of the test pit, the requirements in Section 5.7.3.4 of this procedure must be followed. Prepare, label, pack and transport the sample in the required manner, as described in SOP SA-6.3.

5.8.4 Backfilling of Trenches and Test Pits

All test pits and excavations must be either backfilled, covered, or otherwise protected at the end of each day. No excavations shall remain open during non-working hours unless adequately covered or otherwise protected.

Before backfilling, the onsite crew shall photograph all significant features exposed by the test pit and trench and shall include in the photograph a scale to show dimensions. Photographs of test pits shall be marked to include site number, test pit number, depth, description of feature, and date of photograph. In addition, a geologic description of each photograph shall be entered in the site logbook. All photographs shall be indexed and maintained as part of the project file for future reference.

After inspection, backfill material shall be returned to the pit under the direction of the FOL.

If a low permeability layer is penetrated (resulting in groundwater flow from an upper contaminated flow zone into a lower uncontaminated flow zone), backfill material must represent original conditions or be impermeable. Backfill could consist of a soil-bentonite mix prepared in a proportion specified by the FOL (representing a permeability equal to or less than original conditions). Backfill can be covered by "clean" soil and graded to the original land contour. Revegetation of the disturbed area may also be required.

5.9 Records

The appropriate sample log sheet (see SOP SA-6.3; Field Documentation) must be completed by the site geologist/sampler. All soil sampling locations must be documented by tying in the location of two or more nearby permanent landmarks (building, telephone pole, fence, etc.) and shall be noted on the appropriate sample log sheet, site map, or field notebook. Surveying may also be necessary, depending on the project requirements.

Test pit logs (see SOP SA-6.3; Field Documentation) shall contain a sketch of pit conditions. In addition, at least one photograph with a scale for comparison shall be taken of each pit. Included in the photograph shall be a card showing the test pit number. Boreholes, test pits and trenches shall be logged by the field geologist in accordance with SOP GH-1.5.

Other data to be recorded in the field logbook include the following:

- Name and location of job.
- Date of boring and excavation.
- Approximate surface elevation.
- Total depth of boring and excavation.
- Dimensions of pit.
- Method of sample acquisition.
- Type and size of samples.
- Soil and rock descriptions.
- Photographs.
- Groundwater levels.
- Organic gas or methane levels.
- Other pertinent information, such as waste material encountered.

6.0 REFERENCES

American Society for Testing and Materials, 1987. ASTM Standards D1587-83 and D1586-84. ASTM Annual Book of Standards. ASTM. Philadelphia, Pennsylvania. Volume 4.08.

NUS Corporation, 1986. Hazardous Material Handling Training Manual.

NUS Corporation and CH2M Hill, August, 1987. Compendium of Field Operation Methods. Prepared for the U.S. EPA.

OSHA, Excavation, Trenching and Shoring 29 CFR 1926.650-653.

OSHA, Confined Space Entry 29 CFR 1910.146.

ATTACHMENT A
SPLIT-SPOON SAMPLER

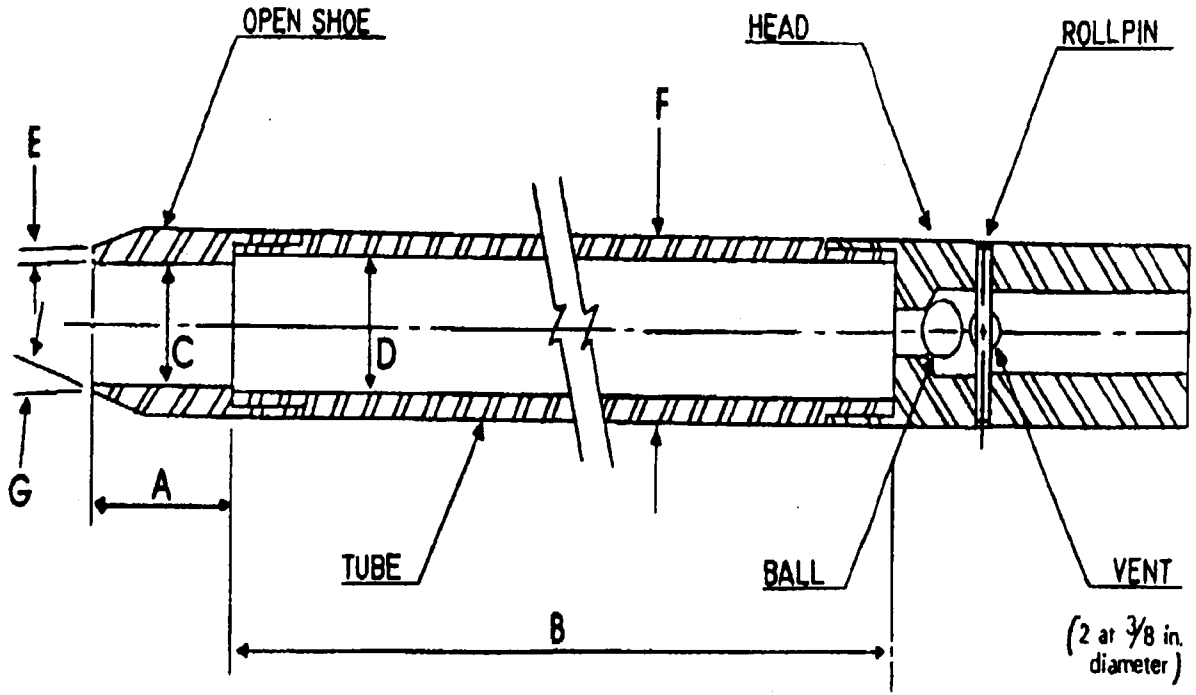

A = 1.0 to 2.0 in. (25 to 50 mm)
B = 18.0 to 30.0 in. (0.457 to 0.762 m)
C = 1.375 ± 0.005 in. (34.93 ± 0.13 mm)
D = 1.50 ± 0.05 – 0.00 in. (38.1 ± 1.3 – 0.0 mm)
E = 0.10 ± 0.02 in. (2.54 ± 0.25 mm)
F = 2.00 ± 0.05 – 0.00 in. (50.8 ± 1.3 – 0.0 mm)
G = 16.0° to 23.0°

The 1½ in. (38 mm) inside diameter split barrel may be used with a 16-gage wall thickness split liner. The penetrating end of the drive shoe may be slightly rounded. Metal or plastic retainers may be used to retain soil samples.

ATTACHMENT B
REMOTE SAMPLE HOLDER FOR TEST PIT/TRENCH SAMPLING

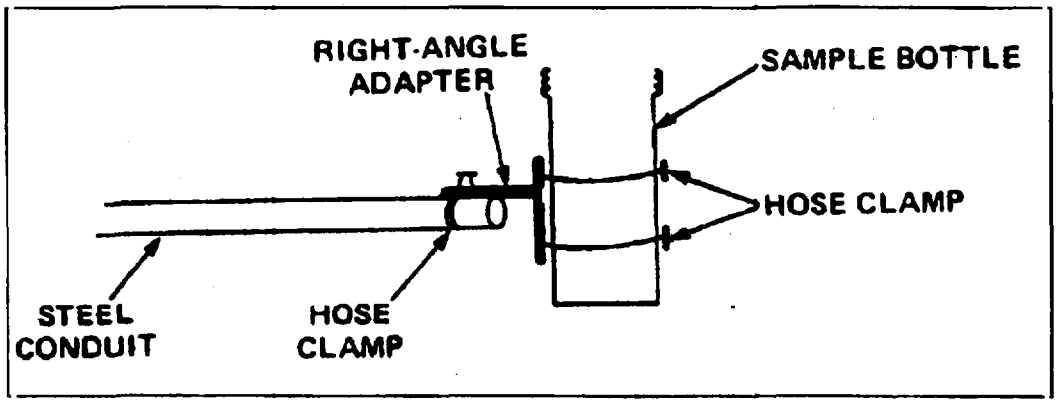

TABLE OF CONTENTS

SECTION **PAGE**

1.0 PURPOSE **2**

2.0 SCOPE **2**

3.0 GLOSSARY **2**

4.0 RESPONSIBILITIES **2**

5.0 PROCEDURES **3**

5.1 EQUIPMENT/ITEMS NEEDED 3
5.2 WELL DESIGN 3
5.2.1 Well Depth, Diameter, and Monitored Interval 3
5.2.2 Riser Pipe and Screen Materials 5
5.2.3 Annular Materials 6
5.2.4 Protective Casing 7
5.3 MONITORING WELL INSTALLATION 7
5.3.1 Monitoring Wells in Unconsolidated Sediments 7
5.3.2 Confining Layer Monitoring Wells 8
5.3.3 Bedrock Monitoring Wells 8
5.3.4 Drive Points 8
5.3.5 Innovative Monitoring Well Installation Techniques 8
5.4 WELL DEVELOPMENT METHODS 9
5.4.1 Overpumping and Backwashing 9
5.4.2 Surging with a Surge Plunger 9
5.4.3 Compressed Air 9
5.4.4 High Velocity Jetting 9

6.0 RECORDS **10**

7.0 REFERENCES **10**

ATTACHMENTS

A RELATIVE COMPATIBILITY OF RIGID WELL-CASING MATERIAL (PERCENT) / RELATIVE COMPATIBILITY OF SEMI-RIGID OR ELASTOMERIC MATERIALS (PERCENT) 11
B COMPARISON OF STAINLESS STEEL AND PVC FOR MONITORING WELL CONSTRUCTION 12

1.0 PURPOSE

This procedure provides general guidance and information pertaining to proper monitoring well design, installation, and development.

2.0 SCOPE

This procedure is applicable to the construction of monitoring wells. The methods described herein may be modified by project-specific requirements for monitoring well construction. In addition, many regulatory agencies have specific regulations pertaining to monitoring well construction and permitting. These requirements must be determined during the project planning phases of the investigation, and any required permits must be obtained before field work begins. Innovative monitoring well installation techniques, which typically are not used, will be discussed only generally in this procedure.

3.0 GLOSSARY

Monitoring Well - A well which is screened, cased, and sealed which is capable of providing a groundwater level and groundwater sample representative of the zone being monitored. Some monitoring wells may be constructed as open boreholes.

Piezometer - A pipe or tube inserted into the water bearing zone, typically open to water flow at the bottom and to the atmosphere at the top, and used to measure water level elevations. Piezometers may range in size from 1/2-inch-diameter plastic tubes to well points or monitoring wells.

Potentiometric Surface - The surface representative of the level to which water will rise in a well cased to the screened aquifer.

Well Point (Drive Point) - A screened or perforated tube (Typically 1-1/4 or 2 inches in diameter) with a solid, conical, hardened point at one end, which is attached to a riser pipe and driven into the ground with a sledge hammer, drop weight, or mechanical vibrator. Well points may be used for groundwater injection and recovery, as piezometers (i.e., to measure water levels) or to provide groundwater samples for water quality data.

4.0 RESPONSIBILITIES

Driller - The driller provides adequate and operable equipment, sufficient quantities of materials, and an experienced and efficient labor force capable of performing all phases of proper monitoring well installation and construction. The driller may also be responsible for obtaining, in advance, any required permits for monitoring well installation and construction.

Field Geologist - The field geologist supervises and documents well installation and construction performed by the driller, and insures that well construction is adequate to provide representative groundwater data from the monitored interval. Geotechnical engineers, field technicians, or other suitable trained personnel may also serve in this capacity.

5.0 PROCEDURES

5.1 Equipment/Items Needed

Below is a list of items that may be needed when installing a monitoring well or piezometer:

- Health and safety equipment as required by the Site Safety Officer.
- Well drilling and installation equipment with associated materials (typically supplied by the driller).
- Hydrogeologic equipment (weighted engineer's tape, water level indicator, retractable engineers rule, electronic calculator, clipboard, mirror and flashlight - for observing downhole activities, paint and ink marker for marking monitoring wells, sample jars, well installation forms, and a field notebook).
- Drive point installation tools (sledge hammer, drop hammer, or mechanical vibrator; tripod, pipe wrenches, drive points, riser pipe, and end caps).

5.2 Well Design

The objectives and intended use for each monitoring well must be clearly defined before the monitoring system is designed. Within the monitoring system, different monitoring wells may serve different purposes and, therefore, require different types of construction. During all phases of the well design, attention must be given to clearly documenting the basis for design decisions, the details of well construction, and the materials used. The objectives for installing the monitoring wells may include:

- Determining groundwater flow directions and velocities.
- Sampling or monitoring for trace contaminants.
- Determining aquifer characteristics (e.g., hydraulic conductivity).

Siting of monitoring wells shall be performed after a preliminary estimation of the groundwater flow direction. In most cases, groundwater flow directions and potential well locations can be determined by an experienced hydrogeologist through the review of geologic data and the site terrain. In addition, data from production wells or other monitoring wells in the area may be used to determine the groundwater flow direction. If these methods cannot be used, piezometers, which are relatively inexpensive to install, may have to be installed in a preliminary investigative phase to determine groundwater flow direction.

5.2.1 Well Depth, Diameter, and Monitored Interval

The well depth, diameter, and monitored interval must be tailored to the specific monitoring needs of each investigation. Specification of these items generally depends on the purpose of the monitoring system and the characteristics of the hydrogeologic system being monitored. Wells of different depth, diameter, and monitored interval can be employed in the same groundwater monitoring system. For instance, varying the monitored interval in several wells, at the same location (cluster wells) can help to determine the vertical gradient and the depths at which contaminants are present. Conversely, a fully penetrating well is usually not used to quantify or vertically locate a contaminant plume, since groundwater samples collected in wells that are screened over the full thickness of the water-bearing zone will be representative of average conditions across the entire monitored interval. However, fully penetrating wells can be used to establish the existence of contamination in the water-bearing zone. The well diameter desired depends upon the hydraulic characteristics of the water-bearing zone, sampling requirements, drilling method and cost.

The decision concerning the monitored interval and well depth is based on the following (and possibly other) information:

- The vertical location of the contaminant source in relation to the water-bearing zone.
- The depth, thickness and uniformity of the water-bearing zone.
- The anticipated depth, thickness, and characteristics (e.g., density relative to water) of the contaminant plume.
- Fluctuation in groundwater levels (due to pumping, tidal influences, or natural recharge/discharge events).
- The presence and location of contaminants encountered during drilling.
- Whether the purpose of the installation is for determining existence or non-existence of contamination or if a particular stratigraphic zone is being investigated.
- The analysis of borehole geophysical logs.

In most situations where groundwater flow lines are horizontal, depending on the purpose of the well and the site conditions, monitored intervals are 20 feet or less. Shorter screen lengths (5 feet or less) are usually required where flow lines are not horizontal, (i.e., if the wells are to be used for accurate measurement of the potentiometric head at a specific point).

Many factors influence the diameter of a monitoring well. The diameter of the monitoring well depends on the application. In determining well diameter, the following needs must be considered:

- Adequate water volume for sampling.
- Drilling methodology.
- Type of sampling device to be used.
- Costs.

Standard monitoring well diameters are 2, 4, 6, or 8 inches. Drive points are typically 1-1/4 or 2 inches in diameter. For monitoring programs which require screened monitoring wells, either a 2-inch or 4-inch-diameter well is preferred. Typically, well diameters greater than 4 inches are used in monitoring programs in which open-hole bedrock monitoring wells are used. With smaller diameter wells, the volume of stagnant water in the well is minimized, and well construction costs are reduced; however, the sampling devices that can be used are limited.

In specifying well diameter, sampling requirements must be considered (up to a total of 4 gallons of water may be required for a single sample to account for full organic and inorganic analyses, and split samples), particularly if the monitored formation is known to be a low-yielding formation. The unit volume of water contained within a monitoring well is dependent on the well diameter as follows:

Casing Inside Diameter (Inch)	Standing Water Length to Obtain 1 Gallon Water (Feet)
2	6.13
4	1.53
6	0.68

If a well recharges quickly after purging, then well diameter may not be an important factor regarding sample volume requirements.

Pumping tests for determining aquifer characteristics may require larger diameter wells (for installation of high capacity pumps); however, in small-diameter wells in-situ permeability tests can be performed during drilling or after well installation is completed.

5.2.2 Riser Pipe and Screen Materials

Well materials are specified by diameter, type of material, and thickness of pipe. Well screens require an additional specification of slot size. Thickness of pipe is referred to as "Schedule" for polyvinyl chloride (PVC) casing and is usually Schedule 40 (thinner wall) or 80 (thicker wall). Steel pipe thickness is often referred to as "Strength". Standard Strength is usually adequate for monitoring well purposes. With larger diameter pipe, the wall thickness must be greater to maintain adequate strength. The required thickness is also dependent on the method of installation; risers for drive points require greater strength than wells installed inside drilled borings.

The selection of well screen and riser materials depends on the method of drilling, the type of subsurface materials the well penetrates, the type of contamination expected, and natural water quality and depth. Cost and the level of accuracy required are also important. The materials generally available are Teflon, stainless steel, PVC galvanized steel, and carbon steel. Each has advantages and limitations (see Attachment A of this guideline for an extensive presentation on this topic). The two most commonly used materials are PVC and stainless steel. Properties of these two materials are compared in Attachment B. Stainless steel is a good choice where trace metals or organic sampling is required; however, costs are high. Teflon materials are extremely expensive, but are relatively inert and provide the least opportunity for water contamination due to well materials. PVC has many advantages, including low cost, excellent availability, light weight, ease of manipulation, and widespread acceptance. The crushing strength of PVC may limit the depth of installation, but the use of Schedule 80 materials may overcome some of the problems associated with depth. However, the smaller inside diameter of Schedule 80 pipe may be an important factor when considering the size of bailers or pumps required for sampling or testing. Due to this problem, the minimum well pipe size recommended for Schedule 80 wells is 4-inch I.D.

Screens and risers may have to be decontaminated before use because oil-based preservatives and oil used during thread cutting and screen manufacturing may contaminate samples. Metal pipe may corrode and release metal ions or chemically react with organic constituents, but this is considered a minor issue. Galvanized steel is not recommended where samples may be collected for metals analyses, as zinc and cadmium levels in groundwater samples may become elevated from leaching of the zinc coating.

Threaded, flush-joint casing is most often preferred for monitoring well applications. PVC, Teflon, and steel can all be obtained with threaded joints. Welded-joint steel casing is also acceptable. Glued PVC may release organic contaminants into the well, and therefore, should not be used if the well is to be sampled for organic constituents.

When the water-bearing zone is in consolidated bedrock, such as limestone or fractured granite, a well screen is often not necessary (the well is simply an open hole in bedrock). Unconsolidated materials, such as sands, clay, and silts require a screen. A screen slot size of 0.010 or 0.020 inch is generally used when a screen is necessary, and the annular borehole space around the screened interval is artificially packed with an appropriately sized sand, selected based on formation grain size. The slot size controls the quantity of water entering the well and prevents entry of natural materials or sand pack. The screen shall pass no more than 10 percent of the pack material, or in-situ aquifer material. The site geologist

shall specify the combination of screen slot size and sand pack which will be compatible with the water-bearing zone, to maximize groundwater inflow and minimize head losses and movement of fines into the wells. For example, as a standard procedure, a Morie No. 1 or No. 10 to No. 20 U.S. Standard Sieve size filter pack is typically appropriate for a 0.020-inch slot screen; however, a No. 20 to No. 40 U.S. Standard Sieve size filter pack is typically appropriate for a 0.010-inch slot screen.

5.2.3 Annular Materials

Materials placed in the annular space between the borehole and riser pipe and screen include a sand pack when necessary, a bentonite seal, and cement-bentonite grout. The sand pack is usually a medium- to coarse-grained poorly graded, silica sand and should relate to the grain size of the aquifer sediments. The quantity of sand placed in the annular space is dependent upon the length of the screened interval, but should always extend at least 1 foot above the top of the screen. At least 1 to 3 feet of bentonite pellets or equivalent shall be placed above the sand pack. Cement-bentonite grout (or equivalent) is then placed to extent from the top of the bentonite pellets to the ground surface.

On occasion, and with the concurrence of the involved regulatory agencies, monitoring wells may be packed naturally (i.e., no artificial sand pack installed). In this case, the natural formation material is allowed to collapse around the well screen after the well is installed. This method has been used where the formation material itself is a relatively uniform grain size, or when artificial sand packing is not possible due to borehole collapse.

Bentonite expands by absorbing water and provides a seal between the screened interval and the overlying portion of the annular space and formation. Cement-bentonite grout is placed on top of the bentonite pellets, extending to the surface. The grout effectively seals the remaining borehole annulus and eliminates the possibility for surface infiltration reaching the screened interval. Grouting also replaces material removed during drilling and prevents hole collapse and subsidence around the well. A tremie pipe should be used to introduce grout from the bottom upward, to prevent bridging, and to provide a better seal. In shallow boreholes that don't collapse, it may be more practical to pour the grout from the surface without a tremie pipe.

Grout is a general term which has several different connotations. For all practical purposes within the monitoring well installation industry, grout refers to the solidified material which is installed and occupies the annular space above the bentonite pellet seal. Grout, most of the time, is made up of one or two assemblages of material, (e.g., cement and/or bentonite). A cement-bentonite grout, which is the most common type of grout used in monitoring well completions, normally is a mixture of cement, bentonite, and water at a ratio of one 90-pound bag of Portland Type I cement, plus 3 to 5 pounds of granular or flake-type bentonite, and 6-7 gallons of water. A neat cement consists of one ninety-pound bag of Portland Type I cement and 6-7 gallons of water. A bentonite slurry (bentonite and water mixed to a thick but pumpable mixture) is sometimes used instead of grout for deep well installations where placement of bentonite pellets is difficult. Bentonite chips are also occasionally used for annular backfill in place of grout.

In certain cases, the borehole may be drilled to a depth greater than the anticipated well installation depth. For these cases, the well shall be backfilled to the desired depth with bentonite pellets/chips or cement grout. A short (1- to 2-foot) section of capped riser pipe sump is sometimes installed immediately below the screen, as a silt reservoir, when significant post-development silting is anticipated. This will ensure that the entire screen surface remains unobstructed.

5.2.4 Protective Casing

When the well is completed and grouted to the surface, a protective steel casing is typically placed over the top of the well. This casing generally has a hinged cap and can be locked to prevent vandalism. The protective casing has a larger diameter than the well and is set into the wet cement grout over the well upon completion. In addition, one hole is drilled just above the cement collar through the protective casing which acts as a weep hole for the flow of water which may enter the annulus during well development, purging, or sampling.

A protective casing which is level with the ground surface (flush-mounted) is used in roadway or parking lot applications where the top of a monitoring well must be below the pavement. The top of the riser pipe is placed 4 to 5 inches below the pavement, and a locking protective casing is cemented in place to 3 inches below the pavement. A large diameter, manhole-type protective collar is set into the wet cement around the well with the top set level with or slightly above the pavement. An appropriately-sized id is placed over the protective sleeve. The cement should be slightly mounded to direct pooled water away from the well head.

5.3 Monitoring Well Installation

Pertinent data regarding monitoring well installation shall be recorded on log sheets as depicted and discussed in SOP SA-6.3. Attachments to this referenced SOP illustrate terms and physical construction of various types of monitoring wells.

5.3.1 Monitoring Wells in Unconsolidated Sediments

After the borehole is drilled to the desired depth, well installation can begin. The procedure for well installation will partially be dictated by the stability of the formation in which the well is being placed. If the borehole collapses immediately after the drilling tools are withdrawn, then a temporary casing must be installed and well installation will proceed through the center of the temporary casing, and continue as the temporary casing is withdrawn from the borehole. In the case of hollow-stem auger drilling, the augers will act to stabilize the borehole during well installation.

Before the screen and riser pipe are lowered into the borehole, all pipe and screen sections should be measured with an engineer's rule to ensure proper placement. When measuring sections, the threads on one end of the pipe or screen must be excluded while measuring, since the pipe and screen sections are screwed flush together.

After the screen and riser pipe are lowered through the temporary casing, the sand pack can be installed. A weighted tape measure must be used during the installation procedure to carefully monitor installation progress. The sand is slowly poured into the annulus between the riser pipe and temporary casing, as the casing is withdrawn. Sand should always be kept within the temporary casing during withdrawal in order to ensure an adequate sand pack. However, if too much sand is within the temporary casing (greater than 1 foot above the bottom of the casing) bridging between the temporary casing and riser pipe may occur. Centralizers may be used at the geologist's discretion, one above and one below the screen, to assure enough annular space for sand pack placement.

After the sand pack is installed to the desired depth (at least 1 foot above the top of the screen), then the bentonite pellet seal (or equivalent), can be installed in the same manner as the sand pack. At least 1 to 3 feet of bentonite pellets should be installed above the sand pack. Pellets should be added slowly and their fall monitored closely to ensure that bridging does not occur.

The cement-bentonite grout is then mixed and tremied into the annulus as the temporary casing or augers are withdrawn. Finally, the protective casing can be installed as detailed in Section 5.2.4.

5.3.2 Confining Layer Monitoring Wells

When drilling and installing a well in a confined aquifer, proper well installation techniques must be applied to avoid cross contamination between aquifers. Under most conditions, this can be accomplished by installing double-cased wells. This is accomplished by drilling a large-diameter boring through the upper aquifer, 1 to 5 feet into the underlying confining layer, and setting and pressure grouting or tremie grouting a large-diameter casing into the confining layer. The grout material must fill the space between the native material and the outer casing. A smaller diameter boring is then continued through the confining layer for installation of the monitoring well as detailed for overburden monitoring wells. Sufficient time (determined by the field geologist), must be allowed for setting of the grout prior to drilling through the confined layer.

5.3.3 Bedrock Monitoring Wells

When installing bedrock monitoring wells, a large diameter boring is drilled through the overburden and approximately 5 –10 feet into bedrock. A casing (typically steel) is installed and either pressure grouted or tremie grouted in place. After the grout has cured, a smaller diameter boring is continued into bedrock to the desired depth. If the boring does not collapse, the well can be left open, and a screen is not necessary. If the boring collapses, then a screen is required and can be installed as detailed for overburden monitoring wells. If a screen is to be used, then the casing which is installed through the overburden and into the bedrock does not require grouting and can be removed when the final well installation is completed.

5.3.4 Drive Points

Drive points can be installed with either a sledge hammer, drop hammer, or a mechanical vibrator. The screen section is threaded and tightened onto the riser pipe with pipe wrenches. The drive point is simply pounded into the subsurface to the desired depth. If a heavy drop hammer is used, then a tripod and pulley setup is required to lift the hammer. Drive points typically cannot be manually driven to depths exceeding 10 feet.

Direct push sampling/monitoring point installation methods, using a direct push rig or drilling rig, are described in SOP SA-2.5.

5.3.5 Innovative Monitoring Well Installation Techniques

Certain innovative sampling devices have proven advantageous. These devices are essentially screened samplers installed in a borehole with only small-diameter tubes extending to the surface. This reduces drilling costs, decreases the volume of stagnant water, and provides a sampling system that minimizes cross-contamination from sampling equipment. Four manufacturers of these samplers include Timco Manufacturing Company, Inc., of Prairie du Sac, Wisconsin, BARCAD Systems, Inc., of Concord, Massachusetts, Westbay Instruments Ltd. of Vancouver, British Columbia, Canada and the University of Waterloo at Waterloo, Ontario, Canada.. Each manufacturer offers various construction materials.

5.4 Well Development Methods

The purpose of well development is to stabilize and increase the permeability of the gravel pack around the well screen, and to restore the permeability of the formation which may have been reduced by drilling operations. Wells are typically developed until all fine material and drilling water is removed from the well. Sequential measurements of pH, conductivity and temperature taken during development may yield information (stabilized values) regarding whether sufficient development has been performed. The selection of the well development method shall be made by the field geologist and is based on the drilling methods, well construction and installation details, and the characteristics of the formation that the well is screened in. The primary methods of well development are summarized below. A more detailed discussion may be found in Driscoll (1986).

5.4.1 Overpumping and Backwashing

Wells may be developed by alternatively drawing the water level down at a high rate (by pumping or bailing) and then reversing the flow direction (backwashing) so that water is passing from the well into the formation. This back and forth movement of water through the well screen and gravel pack serves to remove fines from the formation immediately adjacent to the well, while preventing bridging (wedging) of sand grains. Backwashing can be accomplished by several methods, including pouring water into the well and then bailing, starting and stopping a pump intermittently to change water levels, or forcing water into the well under pressure through a water-tight fitting ("rawhiding"). Care should be taken when backwashing not to apply too much pressure, which could damage or destroy the well screen.

5.4.2 Surging with a Surge Plunger

A surge plunger (also called a surge block) is approximately the same diameter as the well casing and is aggressively moved up and down within the well to agitate the water, causing it to move in and out of the screens. This movement of water pulls fine materials into the well, where they may be removed by any of several methods, and prevents bridging of sand particles in the gravel pack. There are two basic types of surge plungers; solid and valved surge plungers. In formations with low yields, a valved surge plunger may be preferred, as solid plungers tend to force water out of the well at a greater rate than it will flow back in. Valved plungers are designed to produce a greater inflow than outflow of water during surging.

5.4.3 Compressed Air

Compressed air can be used to develop a well by either of two methods: backwashing or surging. Backwashing is done by forcing water out through the screens, using increasing air pressure inside a sealed well, then releasing the pressurized air to allow the water to flow back into the well. Care should be taken when using this method so that the water level does not drop below the top of the screen, thus introducing air into the formation and reducing well yield. Surging, or the "open well" method, consists of alternately releasing large volumes of air suddenly into an open well below the water level to produce a strong surge by virtue of the resistance of water head, friction, and inertia. Pumping of the well is subsequently done using the air lift method.

5.4.4 High Velocity Jetting

In the high velocity jetting method, water is forced at high velocities from a plunger-type device and through the well screen to loosen fine particles from the sand pack and surrounding formation. The jetting tool is slowly rotated and raised and lowered along the length of the well screen to develop the entire

screened area. Jetting using a hose lowered into the well may also be effective. The fines washed into the screen during this process can then be bailed or pumped from the well.

6.0 RECORDS

A critical part of monitoring well installation is recording of all significant details and events in the site logbook or field notebook. The geologist must record the exact depths of significant hydrogeological features, screen placement, gravel pack placement, and bentonite placement.

A Monitoring Well Sheet (see Attachments to SOP SA-6.3) shall be completed, ensuring the uniform recording of data for each installation and rapid identification of missing information. Well depth, length, materials of construction, length and openings of screen, length and type of riser, and depth and type of all backfill materials shall be recorded. Additional information shall include location, installation date, problems encountered, water levels before and after well installation, cross-reference to the geologic boring log, and methods used during the installation and development process. Documentation is very important to prevent problems involving questionable sample validity. Somewhat different information will need to be recorded, depending on whether the well is completed in overburden (single- or double-cased), as a cased well in bedrock, or as an open hole in bedrock.

The quantities of sand, bentonite, and grout placed in the well are also important. The geologist shall calculate the annular space volume and have an idea of the quantity of material needed to fill the annular space. Volumes of backfill significantly higher than the calculated volume may indicate a problem such as a large cavity, while a smaller backfill volume may indicate a cave-in or bridging of the backfill materials. Any problems with rig operation or down-time shall be recorded and may affect the driller's final fee.

7.0 REFERENCES

Scalf, M. R., J. F. McNabb, W. J. Dunlap, R. L. Cosby, and J. Fryberger, 1981. Manual of Groundwater Sampling Procedures. R. S. Kerr Environmental Research Laboratory, Office of Research and Development, U.S. EPA, Ada, Oklahoma.

Barcelona, M. J., P. P. Gibb and R. A. Miller, 1983. A Guide to the selection of Materials for Monitoring Well Construction and Groundwater Sampling. ISWS Contract Report 327, Illinois State Water Survey, Champaign, Illinois.

U.S. EPA, 1980. Procedures Manual for Groundwater Monitoring of Solid Waste Disposal Facilities. Publication SW-611, Office of Solid Waste, U.S. EPA, Washington, D.C.

Driscoll, Fletcher G., 1986. Groundwater and Wells. Johnson Division, St. Paul, Minnesota, 1989.

ATTACHMENT A

RELATIVE COMPATIBILITY OF RIGID WELL CASING MATERIAL (PERCENT)

Potentially-Deteriorating Substance	Type of Casing Material						
	PVC 1	Galvanized Steel	Carbon Steel	Lo-carbon Steel	Stainless Steel 304	Stainless Steel 316	Teflon*
Buffered Weak Acid	100	56	51	59	97	100	100
Weak Acid	98	59	43	47	96	100	100
Mineral Acid/ High Solids Content	100	48	57	60	80	82	100
Aqueous/Organic Mixtures	64	69	73	73	98	100	100
Percent Overall Rating	91	58	56	59	93	96	100

Preliminary Ranking of Rigid Materials:

1 Teflon*
2 Stainless Steel 316
3. Stainless Steel 304
4 PVC 1
5 Lo-Carbon Steel
6 Galvanized Steel
7 Carbon Steel

* Trademark of DuPont

RELATIVE COMPATIBILITY OF SEMI-RIGID OR ELASTOMERIC MATERIALS (PERCENT)

Potentially-Deteriorating Substance	Type of Casing Material								
	PVC Flexible	PP	PE Conv.	PE Linear	PMM	Viton**	Silicone	Neoprene	Teflon**
Buffered Weak Acid	97	97	100	97	90	92	87	85	100
Weak Acid	92	90	94	96	78	78	75	75	100
Mineral Acid/ High Solids Content	100	100	100	100	95	100	78	82	100
Aqueous/Organic Mixtures	62	71	40	60	49	78	49	44	100
Percent Overall Rating	88	90	84	88	78	87	72	72	100

Preliminary Ranking of Semi-Rigid or Elastomeric Materials:

1 Teflon*
2 Polypropylene (PP)
3. PVC Flexible/PE Linear
4 Viton*
5 PE Conventional
6 Plexiglas/Lucite (PMM)
7 Silicone/Neoprene

* Trademark of DuPont

Source: Barcelona et al., 1983

ATTACHMENT B

COMPARISON OF STAINLESS STEEL AND PVC FOR MONITORING WELL CONSTRUCTION

Characteristic	Stainless Steel	PVC
Strength	Use in deep wells to prevent compression and closing of screen/riser.	Use when shear and compressive strength are not critical.
Weight	Relatively heavier.	Light-weight; floats in water.
Cost	Relatively expensive.	Relatively inexpensive.
Corrosivity	Deteriorates more rapidly in corrosive water.	Non-corrosive -- may deteriorate in presence of ketones, aromatics, alkyl sulfides, or some chlorinated hydrocarbons.
Ease of Use	Difficult to adjust size or length in the field.	Easy to handle and work with in the field.
Preparation for Use	Should be steam cleaned if organics will be subsequently sampled.	Never use glue fittings -- pipes should be threaded or pressure fitted. Should be steam cleaned when used for monitoring wells.
Interaction with Contaminants*	May sorb organic or inorganic substances when oxidized.	May sorb or release organic substances.

* See also Attachment A.

TABLE OF CONTENTS

SECTION **PAGE**

1.0 PURPOSE **2**

2.0 SCOPE **2**

3.0 GLOSSARY **2**

4.0 RESPONSIBILITIES **2**

5.0 PROCEDURES **2**

5.1 DRILLING EQUIPMENT 3
5.2 SAMPLING EQUIPMENT 3
5.2.1 Bailers and Bailing Line 3
5.2.2 Sampling Pumps 4
5.2.3 Filtering Equipment 5
5.2.4 Other Sampling Equipment 5
5.3 FIELD ANALYTICAL EQUIPMENT 5
5.3.1 Water Level Indicators 5
5.3.2 Probes 5
5.4 WASTE HANDLING 6
5.5 SOURCES OF CONTAMINATED MATERIALS AND CONTAINMENT METHODS 6
5.5.1 Decontamination Solutions 6
5.5.2 Disposable Equipment 6
5.5.3 Drilling Muds and Well-Development Fluids 7
5.5.4 Spill-Contaminated Materials 8
5.6 DISPOSAL OF CONTAMINATED MATERIALS 8

6.0 REFERENCES **8**

ATTACHMENTS

A TWO TYPES OF MUD PITS USED IN WELL DRILLING 9

1.0 PURPOSE

The purpose of this procedure is to provide guidelines regarding the appropriate procedures to be followed when decontaminating drilling equipment, monitoring well materials, chemical sampling equipment and field analytical equipment.

2.0 SCOPE

This procedure addresses drilling equipment and monitoring well materials decontamination, as well as chemical sampling and field analytical equipment decontamination. This procedure also provides general reference information on the control of contaminated materials.

3.0 GLOSSARY

Acid - For decontamination of equipment when sampling for trace levels of inorganics, a 10% solution of nitric acid in deionized water should be used. Due to the leaching ability of nitric acid, it should not be used on stainless steel.

Alconox/Liquinox - A brand of phosphate-free laboratory-grade detergent.

Deionized Water - Deionized (analyte free) water is tap water that has been treated by passing through a standard deionizing resin column. Deionized water should contain no detectable heavy metals or other inorganic compounds at or above the analytical detection limits for the project.

Potable Water - Tap water used from any municipal water treatment system. Use of an untreated potable water supply is not an acceptable substitute for tap water.

Solvent - The solvent of choice is pesticide-grade Isopropanol. Use of other solvents (methanol, acetone, pesticide-grade hexane, or petroleum ether) may be required for particular projects or for a particular purpose (e.g. for the removal of concentrated waste) and must be justified in the project planning documents. As an example, it may be necessary to use hexane when analyzing for trace levels of pesticides, PCBs, or fuels. In addition, because many of these solvents are not miscible in water, the equipment should be air dried prior to use. Solvents should not be used on PVC equipment or well construction materials.

4.0 RESPONSIBILITIES

Project Manager - Responsible for ensuring that all field activities are conducted in accordance with approved project plan(s) requirements.

Field Operations Leader (FOL) - Responsible for the onsite verification that all field activities are performed in compliance with approved Standards Operating Procedures or as otherwise dictated by the approved project plan(s).

5.0 PROCEDURES

To ensure that analytical chemical results reflect actual contaminant concentrations present at sampling locations, the various drilling equipment and chemical sampling and analytical equipment used to acquire the environment sample must be properly decontaminated. Decontamination minimizes the potential for cross-contamination between sampling locations, and the transfer of contamination off site.

5.1 Drilling Equipment

Prior to the initiation of a drilling program, all drilling equipment involved in field sampling activities shall be decontaminated by steam cleaning at a predetermined area. The steam cleaning procedure shall be performed using a high-pressure spray of heated potable water producing a pressurized stream of steam. This steam shall be sprayed directly onto all surfaces of the various equipment which might contact environmental samples. The decontamination procedure shall be performed until all equipment is free of all visible potential contamination (dirt, grease, oil, noticeable odors, etc.) In addition, this decontamination procedure shall be performed at the completion of each sampling and/or drilling location, including soil borings, installation of monitoring wells, test pits, etc. Such equipment shall include drilling rigs, backhoes, downhole tools, augers, well casings, and screens. Where the drilling rig is set to perform multiple borings at a single area of concern, the steam-cleaning of the drilling rig itself may be waived with proper approval. Downhole equipment, however, must always be steam-cleaned between borings. Where PVC well casings are to be installed, decontamination is not required if the manufacturer provides these casings in factory-sealed, protective, plastic sleeves (so long as the protective packaging is not compromised until immediately before use).

The steam cleaning area shall be designed to contain decontamination wastes and waste waters and can be a lined excavated pit or a bermed concrete or asphalt pad. For the latter, a floor drain must be provided which is connected to a holding facility. A shallow above-ground tank may be used or a pumping system with discharge to a waste tank may be installed.

In certain cases such an elaborate decontamination pad is not possible. In such cases, a plastic lined gravel bed pad with a collection system may serve as an adequate decontamination area. Alternately, a lined sloped pad with a collection pump installed at the lower end may be permissible. The location of the steam cleaning area shall be onsite in order to minimize potential impacts at certain sites.

Guidance to be used when decontaminating drilling equipment shall include:

- As a general rule, any part of the drilling rig which extends over the borehole, shall be steam cleaned.
- All drilling rods, augers, and any other equipment which will be introduced to the hole shall be steam cleaned.
- The drilling rig, all rods and augers, and any other potentially contaminated equipment shall be decontaminated between each well location to prevent cross contamination of potential hazardous substances.

Prior to leaving at the end of each work day and/or at the completion of the drilling program, drilling rigs and transport vehicles used onsite for personnel or equipment transfer shall be steam cleaned, as practicable. A drilling rig left at the drilling location does not need to be steam cleaned until it is finished drilling at that location.

Error! Bookmark not defined.**5.2 Sampling Equipment**

5.2.1 Bailers and Bailing Line

The potential for cross-contamination between sampling points through the use of a common bailer or its attached line is high unless strict procedures for decontamination are followed. For this reason, it is preferable to dedicate an individual bailer and its line to each sample point, although this does not eliminate the need for decontamination of dedicated bailers. For non-dedicated sampling equipment, the following conditions and/or decontamination procedures must be followed.

Before the initial sampling and after each successive sampling point, the bailer must be decontaminated. The following steps are to be performed when sampling for organic contaminants. Note: contract-specific requirements may permit alternative procedures.

- Potable water rinse
- Alconox or Liquinox detergent wash
- Scrubbing of the line and bailer with a scrub brush (may be required if the sample point is heavily contaminated with heavy or extremely viscous compounds)
- Potable water rinse
- Rinse with 10 percent nitric acid solution*
- Deionized water rinse
- Pesticide-grade isopropanol (unless otherwise required)
- Pesticide-grade hexane rinse**
- Copious distilled/Deionized water rinse
- Air dry

If sampling for volatile organic compounds (VOCs) only, the nitric acid, isopropanol, and hexane rinses may be omitted. Only reagent grade or purer solvents are to be used for decontamination. When solvents are used, the bailer must be thoroughly dry before using to acquire the next sample.

In general, specially purchased pre-cleaned disposable sampling equipment is not decontaminated (nor is an equipment rinsate blank collected) so long as the supplier has provided certification of cleanliness. If decontamination is performed on several bailers at once (i.e., in batches), bailers not immediately used may be completely wrapped in aluminum foil (shiny-side toward equipment) and stored for future use. When batch decontamination is performed, one equipment rinsate is generally collected from one of the bailers belonging to the batch before it is used for sampling.

It is recommended that clean, dedicated braided nylon or polypropylene line be employed with each bailer use.

5.2.2 Sampling Pumps

Most sampling pumps are low volume (less than 2 gpm) pumps. These include peristaltic, diaphragm, air-lift, pitcher and bladder pumps, to name a few. If these pumps are used for sampling from more than one sampling point, they must be decontaminated prior to initial use and after each use.

The procedures to be used for decontamination of sampling pumps compare to those used for a bailer except that the 10 percent nitric acid solution is omitted. Each of the liquid factions is to be pumped through the system. The amount of pumping is dependent upon the size of the pump and the length of the intake and discharge hoses. Certain types of pumps are unacceptable for sampling purposes. For peristaltic pumps, the tubing is replaced rather than cleaned.

An additional problem is introduced when the pump relies on absorption of water via an inlet or outlet hose. For organic sampling, this hose should be Teflon. Other types of hoses leach organics (especially phthalate esters) into the water being sampled or adsorb organics from the sampled water. For all other sampling, the hose should be Viton, polyethylene, or polyvinyl chloride (listed in order of preference).

---

* Due to the leaching ability of nitric acid on stainless steel, this step is to be omitted if a stainless steel sampling device is being used and metals analysis is required with detection limits less than approximately 50 ppb.

** If sampling for pesticides, PCBs, or fuels.

Whenever possible, dedicated hoses should be used. It is preferable that these types of pumps not be used for sampling, only for purging.

5.2.3 Filtering Equipment

On occasion, the sampling plan may require acquisition of filtered groundwater samples. Field-filtering is addressed in SOP SA-6.1 and should be conducted as soon after sample acquisition as possible. To this end, three basic filtration systems are most commonly used: the in-line disposable Teflon filter, the inert gas over-pressure filtration system, and the vacuum filtration system.

For the in-line filter, decontamination is not required since the filter cartridge is disposable, however, the cartridge must be disposed of in an approved receptacle and the intake and discharge lines must still be decontaminated or replaced before each use.

For the over-pressure and the vacuum filtration systems, the portions of the apparatus which come in contact with the sample must be decontaminated as outlined in the paragraphs describing the decontamination of bailers. (Note: Varieties of both of these systems come equipped from the manufacturer with Teflon-lined surfaces for those that would come into contact with the sample. These filtration systems are preferred when decontamination procedures must be employed.)

5.2.4 Other Sampling Equipment

Field tools such as trowels and mixing bowls are to be decontaminated in the same manner as described above.

5.3 Field Analytical Equipment

5.3.1 Water Level Indicators

Water level indicators that come into contact with groundwater must be decontaminated using the following steps:

- Rinse with potable water
- Rinse with deionized water

Water level indicators that do not come in contact with the groundwater but may encounter incidental contact during installation or retrieval need only undergo the first and last steps stated above.

5.3.2 Probes

Probes (e.g., pH or specific-ion electrodes, geophysical probes, or thermometers) which would come in direct contact with the sample, will be decontaminated using the procedures specified above unless manufacturer's instructions indicate otherwise (e.g., dissolved oxygen probes). Probes that contact a volume of groundwater not used for laboratory analyses can be rinsed with deionized water. For probes which make no direct contact, (e.g., OVA equipment) the probe is self-cleaning when exposure to uncontaminated air is allowed and the housing can be wiped clean with paper-towels or cloth wetted with alcohol.

5.4 Waste Handling

For the purposes of these procedures, contaminated materials are defined as any byproducts of field activities that are suspected or known to be contaminated with hazardous substances. These byproducts

include such materials as decontamination solutions, disposable equipment, drilling muds, well-development fluids, and spill-contaminated materials and Personal Protection Equipment (PPE).

The procedures for obtaining permits for investigations of sites containing hazardous substances are not clearly defined at present. In the absence of a clear directive to the contrary by the EPA and the states, it must be assumed that hazardous wastes generated during field activities will require compliance with Federal agency requirements for generation, storage, transportation, or disposal. In addition, there may be state regulations that govern the disposal action. This procedure exclusively describes the technical methods used to control contaminated materials.

The plan documents for site activities must include a description of control procedures for contaminated materials. This planning strategy must assess the type of contamination, estimate the amounts that would be produced, describe containment equipment and procedures, and delineate storage or disposal methods. As a general policy, it is wise to select investigation methods that minimize the generation of contaminated spoils. Handling and disposing of potentially hazardous materials can be dangerous and expensive. Until sample analysis is complete, it is assumed that all produced materials are suspected of contamination from hazardous chemicals and require containment.

5.5 Sources of Contaminated Materials and Containment Methods

5.5.1 Decontamination Solutions

All waste decontamination solutions and rinses must be assumed to contain the hazardous chemicals associated with the site unless there are analytical or other data to the contrary. The waste solution volumes could vary from a few gallons to several hundred gallons in cases where large equipment required cleaning.

Containerized waste rinse solutions are best stored in 55-gallon drums (or equivalent containers) that can be sealed until ultimate disposal at an approved facility. Larger equipment such as backhoes and tractors must be decontaminated in an area provided with an impermeable liner and a liquid collection system. A decontamination area for large equipment could consist of a bermed concrete pad with a floor drain leading to a buried holding tank.

5.5.2 Disposable Equipment

Disposable equipment that could become contaminated during use typically includes PPE, rubber gloves, boots, broken sample containers, and cleaning-wipes. These items are small and can easily be contained in 55-gallon drums with lids. These containers should be closed at the end of each work day and upon project completion to provide secure containment until disposed.

5.5.3 Drilling Muds and Well-Development Fluids

Drilling muds and well-development fluids are materials that may be used in groundwater monitoring well installations. Their proper use could result in the surface accumulation of contaminated liquids and muds that require containment. The volumes of drilling muds and well-development fluids used depend on well diameter and depth, groundwater characteristics, and geologic formations. There are no simple mathematical formulas available for accurately predicting these volumes. It is best to rely on the experience of reputable well drillers familiar with local conditions and the well installation techniques selected. These individuals should be able to estimate the sizes (or number) of containment structures required. Since guesswork is involved, it is recommended that an slight excess of the estimated amount of containers required will be available.

Drilling muds are mixed and stored in what is commonly referred to as a mud pit. This mud pit consists of a suction section from which drilling mud is withdrawn and pumped through hoses, down the drill pipe to the bit, and back up the hole to the settling section of the mud pit. In the settling section, the mud's velocity is reduced by a screen and several flow-restriction devices, thereby allowing the well cuttings to settle out of the mud/fluid.

The mud pit may be either portable above-ground tanks commonly made of steel (which is preferred) or stationary in-ground pits as depicted in Attachment A. The above-ground tanks have a major advantage over the in-ground pits because the above-ground tanks isolate the natural soils from the contaminated fluids within the drilling system. These tanks are also portable and can usually be cleaned easily.

As the well is drilled, the cuttings that accumulate in the settling section must be removed. This is best done by shoveling them into drums or other similar containers. When the drilling is complete, the contents of the above-ground tank are likewise shoveled or pumped into drums, and the tank is cleaned and made available for its next use.

If in-ground pits are used, they should not extend into the natural water table. They should also be lined with a bentonite-cement mixture followed by a layer of flexible impermeable material such as plastic sheeting. Of course, to maintain its impermeable seal, the lining material used would have to be nonreactive with the wastes. An advantage of the in-ground pits is that well cuttings do not necessarily have to be removed periodically during drilling because the pit can be made deep enough to contain them. Depending on site conditions, the in-ground pit may have to be totally excavated and refilled with uncontaminated natural soils when the drilling operation is complete.

When the above-ground tank or the in-ground pit is used, a reserve tank or pit should be located at the site as a backup system for leaks, spills, and overflows. In either case, surface drainage should be such that any excess fluid could be controlled within the immediate area of the drill site.

The containment procedure for well-development fluids is similar to that for drilling muds. The volume and weight of contaminated fluid will be determined by the method used for development. When a new well is pumped or bailed to produce clear water, substantially less volume and weight of fluid result than when backwashing or high-velocity jetting is used.

5.5.4 Spill-Contaminated Materials

A spill is always possible when containers of liquids are opened or moved. Contaminated sorbents and soils resulting from spills must be contained. Small quantities of spill-contaminated materials are usually best contained in drums, while larger quantities can be placed in lined pits or in other impermeable structures. In some cases, onsite containment may not be feasible and immediate transport to an approved disposal site will be required.

5.6 Disposal of Contaminated Materials

Actual disposal techniques for contaminated materials are the same as those for any hazardous substance, that is, incineration, landfilling, treatment, and so on. The problem centers around the assignment of responsibility for disposal. The responsibility must be determined and agreed upon by all involved parties before the field work starts. If the site owner or manager was involved in activities that precipitated the investigation, it seems reasonable to encourage his acceptance of the disposal obligation. In instances where a responsible party cannot be identified, this responsibility may fall on the public agency or private organization investigating the site.

Another consideration in selecting disposal methods for contaminated materials is whether the disposal can be incorporated into subsequent site cleanup activities. For example, if construction of a suitable

onsite disposal structure is expected, contaminated materials generated during the investigation should be stored at the site for disposal with other site materials. In this case, the initial containment structures should be evaluated for use as long-term storage structures. Also, other site conditions such as drainage control, security, and soil type must be considered so that proper storage is provided. If onsite storage is expected, then the containment structures should be specifically designed for that purpose.

6.0 REFERENCES

Brown & Root Environmental: Standard Operating Procedure No. 4.33, Control of Contaminated Material.

ATTACHMENT A

TWO TYPES OF MUD PITS USED IN WELL DRILLING

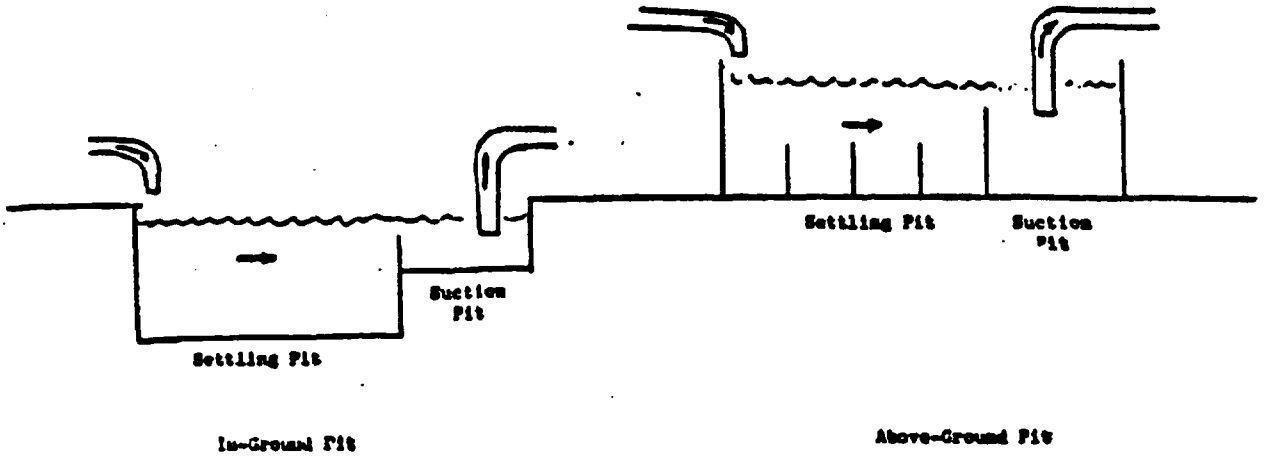

TABLE OF CONTENTS

SECTION		PAGE
1.0	**PURPOSE**	**3**
2.0	**SCOPE**	**3**
3.0	**GLOSSARY**	**3**
4.0	**RESPONSIBILITIES**	**3**
5.0	**PROCEDURES**	**4**
5.1	PRINCIPLE OF OPERATION	4
5.1.1	Displays	5
5.1.2	Keys	5
5.2	DEFAULT DISPLAY	6
5.3	MONITORING	6
5.3.1	Use and Documentation of Results	6
5.3.2	Instrument Status	7
5.3.3	Alarms	7
5.4	STEL, TWA, MAX, AND PEAK OPERATION	13
5.4.1	Short-term Exposure Limit (STEL) Mode	13
5.4.2	Time-weighted Average (TWA) Mode	13
5.4.3	MAX Mode	13
5.4.4	PEAK Mode	14
5.5	SET FUNCTIONS	14
5.5.1	Pump	14
5.5.2	Clock	14
5.5.3	Calibration (Cal)	15
5.5.4	Library (Lib)	15
5.6	PREPARING FOR FIELD OPERATION OF THE PHOTOVAC 2020	15
5.7	MAINTENANCE AND CALIBRATION SCHEDULE	16
5.7.1	Cleaning the UV Light Source Window	16
5.7.2	Cleaning the Ionization Chamber	17
5.8	INSTRUMENT ADVANTAGES	17
5.9	LIMITATIONS OF THE PHOTOVAC 2020 PHOTOIONIZATION MONITOR	17
5.9.1	Variables Affecting Monitoring Data	18
6.0	**TROUBLESHOOTING**	**18**
6.1	FAULT MESSAGES	18
6.2	SPECIFIC PROBLEMS	20

TABLE OF CONTENTS (Continued)

SECTION **PAGE**

7.0 SHIPPING **25**

8.0 REFERENCES **25**

FIGURES

NUMBER **PAGE**

5-1 DOCUMENTATION OF FIELD CALIBRATION 8
5-2 DIRECT-READING INSTRUMENT RESPONSE DATA 9
5-3 BORING LOG 11
5-4 TEST PIT LOG 12
5-5 DANGEROUS GOODS AIRBILL 26

1.0 PURPOSE

To establish procedures for the use, maintenance, and calibration of the Photovac 2020 Photoionization Air Monitor.

2.0 SCOPE

Applies to each usage of the Photovac 2020 Photoionization Air Monitor by TtNUS personnel.

3.0 GLOSSARY

Electron volt (eV) - A unit of energy equal to the energy acquired by an electron when it passes through a potential difference of 1 volt in a vacuum. It is equal to $1.602192 \pm 0.000007 \times 10^{-19}$ volts.

Intrinsically Safe (I.S.) - Based on wiring, configuration, design, operation, gasketing, construction, this instrument may be employed within locations in which flammable gases and/or vapors may exist.

Ionization Potential (I.P.) - The energy required to remove an electron from a molecule yielding a positively charged ion and a negatively charged free electron. The instrument measures this energy level.

Photoionization Detector (PID) - Photoionization detector employed as general reference to air monitors of this type. PIDs detection method employs ultraviolet (UV) radiation as an energy source. As air and contaminant are drawn through the ionization chamber the UV light source causes the contaminant with ionization potentials equal to or less than the UV source to break into positive and negatively charge ions. The created ions are subjected to an electrostatic field. The voltage difference is measured in proportion to the calibration reference and the concentration of the contaminant.

Ultraviolet Radiation (UV) - Ultraviolet radiation is the energy source employed by the instrument to ionize collected sample gas streams. The UV lamp source is required to be equal to or greater than the ionization potential of the substance drawn through the instrument in order to create separate ionized species.

4.0 RESPONSIBILITIES

Office Managers – Office Managers are responsible for ensuring that personnel under their direction who may use this device are first provided with adequate training and information.

Project Managers – Project Managers are responsible for ensuring that appropriate health and safety requirements and resources are addressed for their assigned projects.

Health and Safety Manager (HSM) - The HSM shall ensure that appropriate training is available to users of the Photovac 2020 instrument.

Equipment Manager - The Equipment Manager shall ensure all air monitoring instrumentation slated for field activities has been operationally checked out, fully charged, and calibrated prior to issuing any instrument for field service. Maintenance deficiencies identified by the Equipment Manager will require those instruments to be pulled from service until repairs can be facilitated.

Field Operations Leader (FOL)/Field Team Leader (FTL) - The FOL/FTL shall ensure all field team members employing the monitoring instruments as part of their assigned duties are adequately trained in

the operation and limitations of this instrument. The FOL/FTL shall ensure that the air monitoring instruments are employed as directed by site guidance documents (i.e., Work Plan, Health and Safety Plan, etc.). Additionally, the FOL/FTL shall ensure that the appropriate documentation and recordkeeping requirements are fulfilled including Documentation of Calibration and Direct Reading Instrument Response Data Sheets for air monitoring activities. On projects where a dedicated SSO is not assigned, the FOL/FTL is responsible for assuming the duties of that position.

Health and Safety Officer (HSO) - The HSO is responsible for determining air monitoring requirements for the site activities, and providing direction for air monitoring during specific site activities. This identification of types of air monitoring and direction for use are indicated within the Site-Specific Health and Safety Plan (HASP).

Site Safety Officer (SSO) - The SSO shall ensure the instruments identified are employed in the manner directed by the HSO, and that any action levels specified are observed for the application of engineering controls, personal protective equipment (PPE) use, and administrative controls. Additionally, he/she shall ensure the instruments are properly maintained and calibrated prior to use in the field. The SSO, during specific air monitoring applications including STEL and TWA mode measurements, will be responsible for the operation and application of this specialty air monitoring device. The SSO is also responsible for addressing relevant Hazard Communication requirements (e.g., MSDS, chemical inventories, labeling, training, etc.) on each assigned project.

5.0 PROCEDURES

5.1 Principle of Operation

Direct-reading instruments such as a photoionization detector are typically used to monitor for airborne releases that could present an inhalation threat to personnel, and to screen and bias environmental samples. Proper use of these instruments by trained, qualified personnel is essential to the validity of any acquired results. Also essential is that the devices are properly calibrated according to manufacturers instructions (and the specifications of this SOP), and that users of the instrument properly document results.

The Photovac portable photoionizer detects many organic (and a few inorganic) vapors. The basis for detection of this instrument is the ionization of components of captured gaseous streams. The incoming gas molecules are subjected to ultraviolet (UV) radiation, which is energetic enough to ionize many gaseous compounds. Molecules are transformed into charged-ion pairs, creating a current between two electrodes. Each molecule has a characteristic ionization potential, which is the energy required to remove an electron from the molecule, yielding a positively-charged ion and the free electron. The instrument measures this energy level.

This instrument measures the concentration of airborne photoionizable gases and vapors and automatically displays and records these concentrations. It does not distinguish between individual substances. Readings displayed represent the total concentration of all photoionizable chemicals present in the sample. This instrument is factory set to display concentration in units of ppm or mg/m^3.

The 2020 instrument is easy to operate. The meter display updates itself once per second. Concentrations are directly displayed on the readout.

The 2020 instrument also performs short-term exposure limit (STEL), time-weighted average (TWA) and PEAK calculations. Any of these results can be viewed, but only one mode may be viewed at a time.

2020 has 6 keys for alphanumeric entry and for accessing multiple functions. The keys are used to set up and calibrate the 2020 instrument. They allow for the manipulation of the data in various ways.

All information entered with the keys and stored in the instrument's memory. This is retained when the instrument is switched off. The clock and calendar continue to operate and do not need to be set each time the instrument is turned on.

5.1.1 Displays

The 2020 instrument has a meter display for reporting detected concentration, and a display used to indicate status information and guide the user through configuration options. All functions of the instrument will be controlled or reported using one of these displays.

5.1.1.1 Meter Display

The meter has a 4-digit display. It will always be used for reporting detected concentrations. When the detector and pump are off, the meter display will be blank.

In order to accommodate the entire range of concentrations the 2020 can detect, the instrument has 2 resolution settings. The 0.1 resolution setting should be used for concentrations below 100 ppm, and the 1 resolution setting should be used for concentrations above 100 ppm.

5.1.1.2 Status Display

The status display is a 2 line by 16 character display. The top line is used to display status information and prompts the user for information. The bottom line is used for soft key names. Up to 3 names can be displayed for the 3 soft keys. If a name does not appear for a soft key, then the soft key has no associated function.

5.1.2 Keys

5.1.2.1 Fixed Keys

The three round keys below the soft keys each have a fixed function. The first key is the ON/OFF key, the middle key is the EXIT key, and the last key is the ENTER key.

The ON/OFF key is used both to turn power on to the 2020 as well as to turn the power off. To turn on 2020, press the ON/OFF key. To turn the power off, press the ON/OFF key and hold it down for 2 seconds, and then release it. This is done to prevent an accidental power off.

The EXIT key provides a way of returning to the default display. In the functional map, the soft keys allow the user to advance and the EXIT key provides a way to go back. At the initial entry of the menu, EXIT will return the user to the default display.

The ENTER key has a context sensitive function. When operating or navigating through the function map, the ENTER key is used to exit the functions and return to the default display. When entering data such as a name, number, date, or time, ENTER is used to confirm the entry.

5.1.2.2 Soft Keys

The three soft keys on the 2020 are located directly below the status display. Each key has varying functions for configuring the 2020, editing the data logger, and controlling the display. Since only three soft keys are available, each function is broken down into a path.

5.1.2.3 Entering Text With the Soft Keys

For all information that must be entered, the left, center, and right soft keys correspond to the up, down, and right arrow.

The up and down arrows are used to change the character highlighted by the cursor. The right arrow is used to advance the cursor to the next character to the right. When the cursor is advanced past the right most character, it wraps around to the first character again. To accept the changes, press the ENTER key. To ignore the change, press the EXIT key.

Formatting characters, such as the colon (:) in the time, the decimal (.) in a concentration, and the slash (/) in the date are skipped when advancing the cursor.

All inputs 8 characters long, which is displayed on the right side of the status display line. The prompt, describing the input, occupies the left side of the top line. The soft keys are defined on the bottom line of the status display.

5.2 Default Display

The meter display shows the detected concentration. The resolution of the display automatically changes with the magnitude of the reading. A reading of 0 to 99.9 will be displayed with a resolution of 0.1 ppm or mg/m^3. A reading greater than 99.9 will be shown with a resolution of 1 ppm or mg/m^3. The meter will display concentrations up to 2000 ppm or 2(XX) mg/m^3.

The status display is used to indicate the instrument status, date, time, units, and active soft keys.

The default display provides the following information: instrument status, current detected concentration, time, date, and measurement units. The status display toggles between showing time and units and then the date.

When the display mode is MAX, the date and time correspond to the date and time the MAX concentration was recorded. In TWA mode, the time represents the number of hours and minutes during which the TWA has been accumulating. For PEAK and STEL monitoring, the date and time correspond to the current date and time.

5.3 Monitoring

5.3.1 Use and Documentation of Results

As with any direct-reading instrument, understanding not only how – but when to use this instrument is essential to gathering relevant and valid data. This device will only respond to volatile substances in sampled air that have ionization potentials below the UV lamp strength. Inappropriate instrument selection, or use/interpretation of instrument results by an unqualified user not only can yield inaccurate

results, but could place personnel at risk of exposure to hazardous agents. Only personnel who are properly trained and authorized to use this device will be permitted to operate it.

It is essential that instrument operators understand and comply with the requirements to document results. This includes the need to document calibration results as well as operational readings. Calibration results must be recorded using Figure 5-1. Operational results can be recorded in several ways, including:

- Direct-Reading Instrument Response Data (Figure 5-2) – preferred method
- Boring Log Forms (Figure 5-3)
- Test Pit Log Forms (Figure 5-4)
- Log book entries

When using direct-reading instruments, it is important to monitor the air near the source of potential releases (e.g., drilling boreholes, tank entrances, drum openings, etc.) and at worker breathing zone areas. All readings should be recorded, including readings noted where background levels were not exceeded.

5.3.2 Instrument Status

The instrument status is shown on the left side of the first line of the status display and on the Table and Graph outputs. Each status has an assigned priority assigned to it. If more than one status is in effect, then the status with the highest priority is displayed until the condition is corrected or until the option is turned off.

5.3.3 Alarms

While operating the instrument, any one of three audible alarm conditions can occur. To accurately identify the source of the alarm, each type of alarm has been given a unique status.

The 2020 also has an audible alarm and a visual alarm LED. To conserve power, the 2020 alternates between these two alarm indicators, rather than operating both concurrently. Different alarms are identified by the frequency at which the 2020 alternates as follows: PEAK alarm-5 times per second; STEL alarm-2.5 times per second; and TWA alarm-1.25 times per second.

The left soft key is used for acknowledging alarm conditions, and is named "Ack." If no alarm conditions exist , then the "Ack" key is not shown. To clear an alarm, press the "Ack" key. Once acknowledged, the alarm indicators are cleared. The alarm status will remain until the alarm condition clears.

The 2020 updates the peak concentration once every second. Following every update, the peak concentration is compared to the peak alarm level, and if exceeded, an alarm is triggered.

If the 15 minute average exceeds the selected STEL, a STEL alarm is generated.

The TWA alarm is generated when the current average of concentration, since the TWA was last cleared, has exceeded the TWA exposure limit.

FIGURE 5-1

DOCUMENTATION OF FIELD CALIBRATION

SITE NAME: _____ PROJECT NO.: _____

Date of Calibration	Instrument Name and Model	Tetra Tech Instrument I.D. Number	Person Performing Calibration	Instrument Settings/Readings		Calibration Standard (Lot Number)	Remarks/ Comments
				Pre-Calibration Setting	Post-Calibration Reading		

FIGURE 5-2

DIRECT-READING INSTRUMENT RESPONSE DATA

SITE NAME: _____ PROJECT NO.: _____

PAGE OF

Date and Time(s)	Instrument Operator Name	Instrument Used	Instrument Reading and Duration	Location (e.g., borehole vs breathing zone)	Operation(s) Being Performed	Personnel in Vicinity at Time of Readings and Level of PPE Worn
Example 12-12-91/14:30	Joe Field	HNU 101	15 ppm/15 min.	breathing zone	sample location no. 12	Jim Technician/Level B George Grunt/Level B

FIGURE 5-2 (Continued)

SITE NAME: _____

PROJECT NO.: _____

PAGE _____ OF ____

Date and Time(s)	Instrument Operator Name	Instrument Used	Instrument Reading and Duration	Location (e.g., borehole vs breathing zone)	Operation(s) Being Performed	Personnel in Vicinity at Time of Readings and Level of PPE Worn

FIGURE 5-3

BORING LOG

Page ___ of ___

PROJECT NAME: _____ BORING NUMBER: _____
PROJECT NUMBER: _____ DATE: _____
DRILLING COMPANY: _____ GEOLOGIST: _____
DRILLING RIG: _____ DRILLER: _____

Sample No. and Type or RQD	Depth (FL) or Run No.	Blows / 6" or RQD (%)	Sample Recovery / Sample Length	Lithology Change (Depth/FL) or Screened Interval	MATERIAL DESCRIPTION: Soil Density/ Consistency or Rock Hardness	MATERIAL DESCRIPTION: Color	MATERIAL DESCRIPTION: Material Classification	USCS*	Remarks	PID/FID Reading (ppm): Sample	PID/FID Reading (ppm): Sampler BZ	PID/FID Reading (ppm): Borehole**	PID/FID Reading (ppm): Driller BZ**

* When rock coring, enter rock brokeness.

** Include monitor reading in 6 foot intervals @ borehole. Increase reading frequency if elevated response read.

Remarks: _____

Drilling Area Background (ppm): [ ]

Converted to Well: Yes _____ No _____ Well I.D. #: _____

FIGURE 5-4

Page ___ of ___

TEST PIT LOG

PROJECT NAME: _____ TEST PIT NUMBER: _____
PROJECT NUMBER: _____ DATE: _____
LOCATION: _____ GEOLOGIST: _____

Depth (Ft.)	Lithology Change (Depth/Ft.)	MATERIAL DESCRIPTION: Soil/Waste Characteristics (lithology, density, color, etc.)	USCS	Remarks	PID/FID READING: Source (ppm)	PID/FID READING: BZ (ppm)

TEST PIT CROSS SECTION AND / OR PLAN VIEW

REMARKS: _____

PHOTO LOG: _____

During calibration, all alarms are disabled. Once the calibration is complete the alarms are re-enabled.

5.4 STEL, TWA, MAX, and PEAK Operation

The 2020's display can be configured to show one of four values: STEL, TWA, PEAK, and MAX.

5.4.1 Short-term Exposure Limit (STEL) Mode

The Short-term Exposure Limit (STEL) mode displays the concentration as a 15 minute moving average. The 2020 maintains 15 samples, each representing a one-minute averaging interval.

Once every minute, the oldest of the 15 samples is replaced with a new one minute average. This moving average provides a 15-minute average of the last 15 minutes with a one-minute update rate. Since the average is calculated using 15 one-minute averages, the meter display will only update once every minute.

STEL is set to zero each time the instrument is turned on. Since STEL is a 15-minute moving average, there is no need to clear or reset the STEL.

STEL calculations are always being performed by the 2020. The results of the calculations can be displayed by selecting STEL as the Display mode.

5.4.2 Time-weighted Average (TWA) Mode

The TWA accumulator sums concentrations every second until 8 hours of data have been combined. If this value exceeds the TWA alarm setting, a TWA alarm is generated. The TWA is not calculated using a moving average. Once 8 hours of data have been summed, the accumulation stops. In order to reset the TWA accumulator, press the "Clr" key.

This sum will only be complete after 8 hours, so the meter displays the current sum divided by 8 hours. While in the TWA mode, the time on the status display will show the number of minutes and hours of data that TWA data has been accumulated. When the sample time reaches 8 hours, the 2020 stops accumulating data and the TWA is complete.

TWA calculations are always being performed by the 2020. The results of the calculations can be displayed by selecting TWA as the Display mode. When the sampling period is less than 8 hours, record the TWA readout along with the sampling duration displayed on the meter.

5.4.3 MAX Mode

The MAX mode displays the maximum signal, with the date and time that it was recorded. 2020 continues to log data according to the selected averaging interval, but only the maximum detected concentration is shown on the meter display.

The right soft key is used to clear the meter when displaying MAX. The "Clr" key only affects the reading that the meter is displaying. For example, if you display the MAX reading, and you press "Clr," only the MAX value is cleared. The TWA is still accumulating in the background.

5.4.4 PEAK Mode

The PEAK mode displays the current detected concentration. The reading is updated every second. In the background, the 2020 data logger is sampling the concentration and measuring minimum, maximum, and average concentrations for the selected averaging interval. At the end of every interval, one entry is placed in the data logger until the data logger is full. Typically, the instrument is operated in the PEAK mode. Operation within the other specialized modes are the responsibility of the SSO.

5.5 Set Functions

Pre-set functions are used to setup the 2020. There are three functions which can be used: Calibration, Pump and Clock.

5.5.1 Pump

The Pump function is used to control the pump. After selecting Set Pump, the 2020 responds by displaying the new pump status.

The detector is also turned off when turning the pump off. This prevents the detector from being damaged when there is no sample flowing through the detector.

When the pump and the detector are off, the meter display will be blank. Turn the pump and detector off when concentration measurements are not necessary, and the 2020 will only be used for reviewing data or generating reports. Operating the instrument with the pump and detector turned off will conserve the lives of the battery and ultraviolet (UV) lamp.

1. Press the ENTER key. The top line of the status display changes to "Select?". The bottom line displays 3 soft key names: "Set," "Log," and "Disp."

2. Press the soft key below "Set."

3. The names of the soft keys change to reflect the Set options. The display now shows 3 devices which can be set: "Clock," "Pump," and "Cal." Press the "Pump" key.

4. If the pump is off, pressing the "Pump" key will turn the pump on.

5. A message will be displayed showing the status of the pump. The display reverts back to the previous menu after a few seconds.

6. To return to the default display, press the ENTER key.

5.5.2 Clock

The Clock function is used to set both the current date and time.

1. Press the ENTER key.

2. Press the "Set" key.

3. When the names of the soft keys change, press the "Clock" key.

The up and down arrows are used to change the character underlined by the cursor. The right arrow is used to advance the cursor to the next character to the right. When the cursor is advanced past the right-most character, it wraps around to the first character again.

Formatting characters, such as the colon (:) in the time and the slash (/) in the date are skipped when advancing the cursor.

4. Use the "arrow keys" to enter the correct time. The time is formatted as Hour:Minute:Second.

5. Press the ENTER key to confirm the time and move to the date option.

6. When setting the date, the 2020 prompts the user to input the current date formatted as Year/Month/Day. Use the "arrow keys" to enter the correct date.

7. Press the ENTER key to confirm the date and return to the Set options.

5.5.3 Calibration (Cal)

The Cal function allows the user to setup and calibrate the 2020. Three options are available under the Cal function: "Zero," Span," and "Mem."

A calibration memory consists of a name, a response factor, and PEAK, TWA, and STEL alarm levels.

The "Zero" and "Span" keys are covered in detail in the manufacturer's operations manual for the instrument.

To edit the calibration memory, select "Mem" and then "Chng." The 2020 prompts the user with two new soft keys: "User" and "Lib."

5.5.4 Library (Lib)

Library selections simplify Cal Memory programming, and provide standard response factors for approximately 70 applications. "Lib" allows you to select an entry from a pre-programmed library. The name, response factor, and three alarm levels are all set from the library. To select a library entry to program the selected Cal Memory:

1. Select "Set," "Cal," "Mem," "Chng," and "Lib."

2. Use the "Next" and "Prev" keys to scroll through the list. See the manufacturer's manual for a list of the library entries.

5.6 Preparing for Field Operation of the Photovac 2020

Turning 2020 On

1. Turn the 2020 on by pressing the ON/OFF key.

2. The instrument will display the software version number. Wait for the 2020 to proceed to the default display.

3. Allow 10 minutes for the instrument to warm up and stabilize.

4. Press the "Enter" Key. The default display will provide 3 soft key selections: "Set," "Log," and "Display."

5. Press "Set." From this option 3 other soft key selections will be offered: "Pump," "Clock," and "Cal."

6. Press "Cal." This will begin the calibration sequence. The first selection is to Zero the instrument.

7. Press "Enter," zeroing will begin. (Note: When employing zero gas attach and activate zero gas supply at this time.)

8. The next selection is for Span determination. Press "Enter" and the concentration will be requested. The isobutylene calibration gas employed under general service will be marked on the side of the container. Use the soft keys to toggle into position and to log the concentration. Once the concentration is logged press "Enter." The direction or status display will indicate spanning. At this time hook up the span gas with a regulator to the Photovac 2020, and open it to supply enough flow to elevate the flow rate indicator to the green indicator line (1/8" from the rest position).

9. Once spanning is complete, the alarms which have been disabled during calibration will activate indicating that calibration is complete.

10. Document this calibration procedure using a Documentation of Calibration form as illustrated in Figure 5-1.

This instrument is ready for use.

Calibration is to be performed daily or prior to each use in accordance with Sections 5.6 and 5.7 of this SOP, and with manufacturer's recommendations.

5.7 Maintenance and Calibration Schedule

Function	Frequency
Routine Calibration	Prior to each use. Complete Figure 5-4 for each calibration.
Factory Inspection and Calibration	Once a year, or when malfunctioning
Wipe Down the Outer Casing of the Unit	After each use
Clean UV Light Source	Every 24 hours of operation
Sample Inlet Filter	Change on a weekly basis or as required by level of use
Battery charging	After each use
Clean ionization chamber	Monthly

5.7.1 Cleaning the UV Light Source Window

1. Turn the FUNCTION switch to the OFF position. Use the instrument's multi-tool and remove lamp housing cover.

2. Tilt the lamp housing with one hand over the opening, slide the lamp out of the housing.

3. The lamp window may now be cleaned with any of the following compounds using lens paper:

   a. 11.7 eV Lamp - Dry Aluminum Oxide Powder (3.0 micron powder)
   b. All other lamps - HPLC Grade Methanol

   Observe manufacturer's MSDS requirements when handling these substances.

4. Following cleaning, reassemble by first sliding the lamp back into the lamp housing. Replace o-ring as necessary, reinstall lamp housing cover, tighten using the multi-tool. (Do not over tighten).

5. Recalibrate as per Section 5.6.

5.7.2 Cleaning the Ionization Chamber

1. Turn the FUNCTION switch to the OFF position and remove the lamp housing cover and lamp as per Section 5.7.1.

2. Using a gentle jet of compressed air, gently blow out any dust or debris.

3. Following cleaning, reassemble by first sliding the lamp back into the lamp housing. Replace o-ring as necessary, reinstall lamp housing cover, tighten using the multi-tool. (Do not over tighten).

4. Recalibrate as per Sections 5.6 and 5.7.

5.8 Instrument Advantages

The Photovac 2020 is easy to use in comparison to many other types of monitoring instrumentation. Its detection limit is in the low parts-per-million range. Response time quickly reaches 90 percent scale of the indicated concentration (less than 3 seconds for benzene). This instrument's automated performance covers multiple monitoring functions simultaneously, and incorporates data logging capabilities.

5.9 Limitations of the Photovac 2020 Photoionization Monitor

- Since the 2020 is a nonspecific total gas/vapor detector, it cannot be used to identify unknown chemicals; it can only quantitate them in relationship to a calibration standard (relative response ratio).

- For appropriate application of the 2020, ionization potentials of suspected contaminants must be known.

- Because the types of compounds that the 2020 can potentially detect are only a fraction of the chemicals possibly present at a hazardous waste site, a background or zero reading on this instrument does not necessarily signify the absence of air contaminants.

- The 2020 instrument can monitor only certain vapors and gases in air. Many nonvolatile liquids, toxic solids, particulates, and other toxic gases and vapors cannot be detected.

- PID's are generally not compound-specific. Their response to different compounds is relative to the calibration gas used. This is generally referred to as the relative response ratio. Instrument readings may be higher or lower than the true concentration. This can be especially serious when monitoring for total contaminant concentrations if several different compounds are being detected at once.

- The 2020 is a small, portable instrument which cannot be expected to yield results as accurately as laboratory instruments.

5.9.1 Variables Affecting Monitoring Data

Monitoring hazardous waste site environments can pose a significant challenge in assessing airborne concentrations and the potential threats to site personnel. Several variables may influence both dispersion and the instrument's ability to detect actual concentrations. Some of the variables which may impact these conditions are as follows:

- Temperature Pressure - changes in temperature and/or pressure will influence volatization, and effect airborne concentrations. Additionally, an increase or decrease in temperature ranges may have an adverse effect on the instrument's ability to detect airborne concentrations. Significant changes in temperature or pressure from the time of calibration to the time of sample measurement may result in erroneous results.

- Humidity - excessive levels of humidity may interfere with the accuracy of monitoring results.

- Rainfall - through increased barometric pressure and water may influence dispersion pathways effecting airborne emissions.

- Electromagnetic interference - high voltage sources, generators, other electrical equipment may interfere with the operation and accuracy of direct-reading monitoring instruments.

6.0 TROUBLESHOOTING

6.1 Fault Messages

When the "Fault" status is displayed, the 2020's operation is comprised.

Fault 1: Signal from zero gas is too high.

Cause: If another fault occurred while the 2020 was setting its zero point, then this fault is displayed.

Action: Ensure no faults are occurring and calibrate the 2020 again.

Cause: Contamination of sample line, sample probe or fittings before the detector.

Action: Clean or replace the sample line, sample probe or the inlet filter.

Cause: Span gas and zero air are mixed up.

Action: Ensure clean air is used to zero the 2020. If you are using Tedlar bags, mark the calibration and zero gas Tedlar bags clearly.

Cause: Ambient air is contaminated.

Action: If the quality of ambient air is unknown, use a supply of commercial zero grade air.

Fault 2: Signal from span gas is too small.

Cause: Operator may have incorrectly used the span gas for the zero air source.

Action: Ensure clean air is used to zero the 2020. If you are using Tedlar bags, mark the calibration and zero gas Tedlar bags clearly.

Action: Ensure the span gas is of a reliable concentration.

Cause: UV lamp window is dirty.

Note: Do not remove the detector lamp in a hazardous location.

Action: Clean the UV lamp window.

Cause: UV lamp is failing.

Note: Do not remove or replace the detector lamp in a hazardous location.

Action: Install a new UV lamp.

Cause: Incompatible application.

Action: The concentration and sample gas are incompatible for use with the 2020.

Fault 3: UV lamp fault. UV lamp has not started.

Cause: UV lamp has not started immediately.

Action: This fault may be seen momentarily when the 2020 is first turned on. Allow 30 to 60 seconds for the UV lamp to start and the fault to clear.

Cause: UV lamp serial number label is blocking the photocell.

Note: Do not remove or replace the detector lamp in a hazardous location.

Action: The UV lamp has a white serial number label, it is possible that the label is blocking the photocell. Rotate the lamp approximately 90 degree and then try to start the 2020 again. If the fault persists, replace the lamp.

Cause: UV lamp not installed.

Note: Do not remove or replace the detector lamp in a hazardous location.

Action: Install a UV lamp.

Cause: UV lamp has failed.

Note: Do not remove or replace the detector lamp in a hazardous location.

Action: Install a new UV lamp.

Cause: Electronic problem.

Action: If a new UV lamp still generates this fault, then contact the Photovac Service Department.

Fault 4: Pump current too low or too high.

Cause: If the pump sounds labored, then the pump is operating beyond normal operating parameters.

Action: Check for an obstruction in the sample line. Make sure sample line, sample probe or inlet filter are not plugged.

Note: Do not replace the inlet filter in a hazardous location.

Action: Replace the inlet filter.

Action: Ensure the sample outlet, located on the underside of the 2020, is not obstructed.

Cause: UV lamp is too wide, causing flow to be restricted.

Note: Do not remove or replace the detector lamp in a hazardous location.

Action: If the UV lamp has a white serial number label, it is possible that the lamp is too wide for the lampholder. Contact the Equipment Manager.

Cause: The 2020 has been exposed to a solvent that can pass through the inlet filter and liquid has been aspirated.

Action: Contact the Equipment Manager.

Cause: The pump has failed.

Action: Contact the Equipment Manager.

6.2 Specific Problems

Problem: Very low or no instrument response detected, yet compounds are suspected to be present.

Cause: The 2020 has not been calibrated properly.

Action: Ensure the calibration gas is of a reliable concentration and then calibrate the instrument as outlined in the User's Manual.

After the instrument has been calibrated, sample the bag of calibration gas. A reading equivalent to the calibration gas should be displayed. If not, contact the Equipment Manager.

Note: Do not remove or recharge the battery pack in a hazardous location.

Action: Disconnect the battery charger before calibrating the 2020.

Cause: Calibration Memories have not been programmed correctly.

Action: Program all the calibration memories required for the intended application. You must use the correct calibration gas and concentration for each Cal Memory.

Cause: Response factor has been set to zero.

Action: Enter the correct response factor. Refer to the list of response factors. If the compound is not listed or you are measuring gas mixtures, then enter a value of 1.0. See User's Manual.

Cause: Not using the correct Cal Memory.

Action: Select the correct Cal Memory for the intended application.

Note: It does not matter which Cal Memory is selected or which response factor is entered. The 2020's response is not specific to any one compound. The reading displayed represents the total concentration of all ionizable compounds in the sample.

Cause: Detector is leaking. A decrease in sensitivity may be due to a leak in the detector.

Note: Do not remove or replace the detection lamp in a hazardous location.

Action: Ensure the UV lamp has been installed correctly.

Action: Ensure the lamp cover has been tightened. Do not overtighten the cover.

Action: Ensure the o-ring seal on the lamp cover is positioned correctly.

Cause: UV lamp is too long, causing flow to be restricted.

Note: Do not remove or replace the detector lamp in a hazardous location.

Action: If the UV lamp has a white serial number label, it is possible that the lamp is too long for the lampholder. Replace the lamp and contact the Equipment Manager.

Cause: UV lamp is too wide, causing flow to be restricted.

Note: Do not remove or replace the detector lamp in a hazardous location.

Action: If the UV lamp has a white serial number label, it is possible that the lamp is too wide for the lampholder. Contact the Equipment Manager.

Cause: Sampling environment is extremely humid.

Action: Water vapor is not ionized by the PID, but it does scatter and absorb the light and results in a lower reading.

The 2020 detector has been designed to operate under high humidity conditions. Under extreme humidity conditions, there may be a decreased response.

Cause: UV lamp is failing.

Action: Replace UV lamp.

Note: Do not remove or replace the detector lamp in a hazardous location.

Cause: High concentration of non-ionizable compounds suspected.

Action: Chemical compounds, such as methane, with IPs greater than the 10.6 eV scatter and absorb the UV light. Sensitivity may be decreased significantly.

Application with high backgrounds of such materials, may be incompatible with the 2020. Contact the Photovac Applications Group for more information.

Problem: Erroneously high readings.

Cause: Sampling environment is extremely humid.

Action: Water vapor may contain mineral salts which conduct a charge. The water vapor becomes an electrolytic solution which becomes ionized when it enters the detector.

Atmospheric water in areas around the sea or stagnant water may produce a response in the absence of contaminants. The same effect may be seen when conducting ground water investigations in areas where the water contains a significant concentration of minerals.

Cause: The 2020 has not been calibrated properly.

Action: Ensure the calibration gas is of a reliable concentration and then calibrate the instrument as outlined in Sections 5.6 and 5.7.

After the instrument has been calibrated, sample the bag of calibration gas. A reading equivalent to the calibration gas should be displayed. If not contact the Equipment Manager.

Cause: Cal Memories have not been programmed correctly.

Action: Program all the Cal Memories required for the intended application. The correct calibration gas and concentration must be used for each Cal Memory. See the User's Manual.

Cause: Not using the correct Cal Memory.

Action: Select the correct Cal Memory for the intended application. See the User's Manual.

Note: It does not matter which Cal Memory is selected or which response factor is entered. The 2020's response is not specific to any one compound. The reading displayed represents the total concentration of all ionizable compounds in the sample.

Cause: Detector has been short circuited by foreign matter in the detector cell.

Note: Do not service the 2020 in a hazardous location.

Action: Do not touch the wire grid inside the detector cell. Use a gentle jet of compressed air to remove any dust in the detector cell.

Warning: Do not insert any object, other than the UV lamp, into the lampholder.

Cause: There is an undetermined problem.

Action: Contact the Equipment Manager.

Problem: Date and time settings are not retained.

Cause: The battery pack was removed before the 2020 was turned off.

Note: Do not remove or recharge the battery pack in a hazardous location.

Action: Replace the battery pack and reset the time and date. Ensure that the 2020 has been turned off before removing the battery pack.

Cause: The 2020 has not been used for 3 months or more and the internal battery (not the external battery pack) has discharged.

Note: Do not remove or recharge the battery pack in a hazardous location.

Action: Connect the 2020 to the AC adapter and turn the instrument on. Turn the pump off. While the 2020 is running the internal battery is charging. Leave the instrument running for approximately 24 hours.

Problem: Instrument status shows "Over."

Cause: High concentrations of gases and vapors will cause a rapid change in signal level. The detector and associated electronics may become temporarily saturated.

Action: Wait a few seconds for the status to return to normal. PIDs are designed to detect relatively low concentrations of gases and vapors. Exposure to very high concentrations may result in a very high or maximum response.

Cause: The detector has become saturated.

Action: Move the 2020 to a location where it can sample clean air. Sample clean air until the reading stabilizes around 0.

Cause: Detector has been short circuited by foreign matter in the detector cell.

Note: Do not service the 2020 in a hazardous location.

Action: Do not touch the wire grid inside the detector cell. Use a gentle jet of compressed air to remove any dust or dirt in the detector cell.

Warning: Do not insert any object, other than the UV lamp, into the lampholder.

Cause: There is an undetermined problem.

Action: Contact the Equipment Manager.

Problem: Display is blank.

Cause: Battery pack is critically low.

Note: Do not remove or recharge the battery pack in a hazardous location.

Action: Replace the battery pack or connect the 2020 to the AC adapter.

Cause: The battery pack is not connected to the instrument correctly.

Action: Ensure the battery pack connector is securely attached to the connector on the 2020.

Cause: There is an undetermined problem.

Action: Reset the 2020. Leave the instrument on while disconnecting the battery pack. This will reset the instrument. Reconnect the battery pack and close the battery hatch. Turn on the 2020, set the time and date and program all the calibration memories.

Action: Contact the Equipment Manager.

Problem: Sample flow rate is less than 300 ml/min.

Cause: Inlet filter is plugged.

Note: Do not replace the inlet filter in a hazardous location.

Action: Replace inlet filter.

Cause: Inlet filter has not been installed properly.

Action: Ensure that the inlet filter has been installed correctly.

Cause: UV lamp is too long, causing flow to be restricted.

Note: Do not remove or replace the detector lamp in a hazardous location.

Action: If the UV lamp has a white serial number label, it is possible that the lamp is too long for the lampholder. Replace the lamp and contact the Equipment Manager.

Cause: UV lamp is too wide, causing flow to be restricted.

Action: If the UV lamp has a white serial number label, it is possible that the lamp is too wide for the lampholder. Contact the Equipment Manager.

Cause: The 2020 has been exposed to a solvent that can pass through the inlet filter and liquid has been aspirated.

Action: Contact the Equipment Manager.

Cause: Sample outlet is obstructed.

Action: Ensure the sample outlet is not obstructed in any way.

Cause: Pump has been damaged.

Action: Contact the Equipment Manager.

Problem: Liquid has been aspirated.

Cause: The 2020 has been exposed to a solvent that can pass through the inlet filter.

Action: Contact the Equipment Manager.

Problem: Corrosive gases and vapors have been sampled.

Cause: The 2020 has been exposed to corrosive gases and vapors.

Action: Corrosive gases and vapors can affect the electrodes within the detector as well as the lamp window. Prolonged exposure to corrosive materials may result in permanent fogging or etching of the window. If the 2020 is exposed to corrosive material, contact the Equipment Manager.

7.0 SHIPPING

- The Photovac may be shipped as cargo or carried on as luggage provided that there is no calibration gas cylinder accompanying the kit. When shipping or transporting the calibration gas, a Hazardous Materials (Dangerous Good) Airbill, including the information as stipulated in Figure 5-5 will be prepared. **Only personnel who have been properly trained are permitted to offer a hazardous material for shipment.** The "Shipping Hazardous Materials" course offered by Tetra Tech NUS is considered acceptable training for this purpose. Specific instructions on packaging, labeling, and otherwise preparing a hazardous material shipment are presented in the Student Manual that accompanies the course.

8.0 REFERENCES

Photovac 2020 Photoionization Monitor User's Manual, 1995.

Student Manual from "Shipping Hazardous Materials" course, Tetra Tech NUS, 1999.

FIGURE 5-5

FedEx *Dangerous Goods Airbill*

6/300
7161150

Sender's Copy
RETAIN FOR 1 YEAR
RETAIN THIS COPY FOR YOUR RECORDS

The World On Time

1 From (please print and press hard)

Date _____ Sender's FedEx Account Number _____

Sender's Name _____ Phone ( )

Company _____

Address _____ Dept./Floor/Suite/Room

City _____ State _____ ZIP _____

2 Your Internal Billing Reference Information (Optional: First 24 characters will appear on invoice)

3 To (please print and press hard)

Recipient's Name: Tom Patton Phone: (412) 262-4583

Company: Tetra Tech NUS

Address: Spring Run Road Extension, Suite 140 (We Cannot Deliver to P.O. Boxes or P.O. ZIP Codes) Dept./Floor/Suite/Room

☐ Check here if residence

City: Coraopolis State: PA ZIP: 15108

For HOLD at FedEx Location check here: ☐ Hold Weekday ☐ Hold Saturday

For WEEKEND Delivery check here: ☐ Saturday Delivery (Available for FedEx Priority Overnight and FedEx 2Day only) ☐ NEW Sunday Delivery (Available for FedEx Priority Overnight only)

4A Express Package Service *Packages under 150 lbs.*

☐ FedEx Priority Overnight ☐ FedEx Standard Overnight ☐ FedEx 2Day ☐ FedEx Express Saver

4B Express Freight Service *Packages over 150 lbs.*

☐ FedEx Overnight Freight ☐ FedEx 2Day Freight ☐ FedEx Express Saver Freight

(Call for delivery schedule. Some restrictions apply. See back for detailed descriptions of freight services.)

Questions? Call 1-800-Go-FedEx® (800)463-3339

5 Packaging

☒ Other Packaging

Dangerous Goods cannot be shipped in FedEx packaging.

6 Special Handling

☒ Dangerous Goods as per attached Shipper's Declaration ☐ Cargo Aircraft Only

7 Payment

☐ Sender ☐ Recipient ☐ Third Party ☐ Credit Card ☐ Cash/Check

FedEx Account No.

Credit Card No. Exp. Date

Total Packages | Total Weight | Total Declared Value* $ .00 | Total Charges $

Signature Release Unavailable

PART #154251 • Rev. Date 4/98 ©1994-98 FedEx • PRINTED IN U.S.A.

355

FedEx Tracking Number: 807286974806 Form I.D. No.: 0204

Page 1 of 1 Pages

Two completed and signed copies of this Declaration must be handed to the operator.

WARNING

Failure to comply in all respects with the applicable Dangerous Goods Regulations may be in breach of the applicable law, subject to legal penalties. This Declaration must not, in any circumstances, be completed and/or signed by a consolidator, a forwarder or an IATA cargo agent.

TRANSPORT DETAILS

This shipment is within the limitations prescribed for: (delete non-applicable)

PASSENGER AND CARGO AIRCRAFT

Airport of Departure:

Airport of Destination:

Shipment type: (delete non-applicable)

NON-RADIOACTIVE ~~RADIOACTIVE~~

NATURE AND QUANTITY OF DANGEROUS GOODS

Dangerous Goods Identification

Proper Shipping Name	Class or Division	UN or I.D. No.	Packing Group	Subsidiary Risk	Quantity and Type of Packaging	Packing Inst.	Authorization
Compressed Gas N.O.S. (mixture Nitrogen and Oxygen)	2.2	UN 1956			1 Plastic box x 0.56 Kg	200	

Additional Handling Information

Prepared for AIR TRANSPORT according to: (Customer MUST check one)

☐ 49 CFR ☒ ICAO / IATA

I hereby declare that the contents of this consignment are fully and accurately described above by the proper shipping name and are classified, packaged, marked, and labelled/placarded, and are in all respects in proper condition for transport according to applicable international and national governmental regulations.

Name/Title of Signatory

Place and Date

Signature (not rubber stamp)

Emergency Telephone Number (Required for US Origin or Destination Shipments) 1-800-535-5053 InfoTRAC

IF ACCEPTABLE FOR PASSENGER AIRCRAFT, THIS SHIPMENT CONTAINS RADIOACTIVE MATERIAL INTENDED FOR USE IN, OR INCIDENT TO, RESEARCH, MEDICAL DIAGNOSIS, OR TREATMENT.

TABLE OF CONTENTS

SECTION		PAGE
1.0	PURPOSE	2
2.0	SCOPE	2
3.0	GLOSSARY	2
4.0	RESPONSIBILITIES	2
5.0	PROCEDURES	3
5.1	GENERAL	3
5.2	USE AND DOCUMENTATION OF RESULTS	3
5.3	PRINCIPLES OF OPERATION	3
5.4	CALIBRATION	10
5.5	ROUTINE MAINTENANCE	11
5.5.1	Battery Charging	11
5.5.2	Emptying the Hydrogen Cylinder	12
5.5.3	Replacing the Sample Inlet Filter	12
5.6	TROUBLESHOOTING	13
5.6.1	MicroFID Fault Messages	13
5.7	TRANSPORTING MICROFID	18
6.0	SHIPPING	18
7.0	REFERENCES	18

FIGURES

NUMBER		PAGE
5-1	DOCUMENTATION OF FIELD CALIBRATION	4
5-2	DIRECT-READING INSTRUMENT RESPONSE DATA	5
5-3	BORING LOG	7
5-4	TEST PIT LOG	8
6-1	EXAMPLE OF A HAZARDOUS AIRBILL FOR HYDROGEN	19
6-2	EXAMPLE OF A HAZARDOUS AIRBILL FOR METHANE IN AIR	20

1.0 PURPOSE

To establish procedures for the use, calibration, maintenance, troubleshooting, and shipment of the Photovac MicroFID handheld flame ionization detector.

2.0 SCOPE

Applies to all Brown & Root Environmental personnel who operate the MicroFID instrument during the performance of their work.

3.0 GLOSSARY

None.

4.0 RESPONSIBILITIES

Office Managers - Office Managers are responsible for ensuring that personnel under their direction who may use this device are first provided with adequate training and information.

Project Managers - Project Managers are responsible for ensuring that appropriate health and safety requirements and resources are addressed for their assigned projects.

Health and Safety Manager (HSM) - The HSM shall ensure that appropriate training is available to users of the Photovac MicroFID instrument.

Equipment Manager - The Equipment Manager shall ensure that all air monitoring instrumentation slated for field activities has been operationally checked out, fully charged, and calibrated prior to issuance for field service. Maintenance deficiencies identified by the Equipment Manager will require those instruments to be pulled from service until repairs can be facilitated.

Field Operations Leader (FOL)/Field Team Leader (FTL) - The FOL/FTL shall ensure all field team members using monitoring instruments as part of their assigned duties are adequately trained in their proper operation and limitations. The FOL/FTL shall ensure that the air monitoring instruments are employed as directed by site guidance documents (i.e., Work Plan, Health and Safety Plan, etc.). Additionally, the FOL/FTL shall ensure that the appropriate documentation and recordkeeping requirements are fulfilled including Documentation of Calibration and Direct Reading Instrument Response Data Sheets for air monitoring activities. On projects where a dedicated SSO is not assigned, the FOL/FTL is responsible for assuming the duties of that position.

Health and Safety Officer (HSO) - The HSO is responsible for determining air monitoring requirements for the site activities, and providing direction for air monitoring during specific site activities. This identification of types of air monitoring and direction for use are indicated within the Site-Specific Health and Safety Plan (HASP).

Site Safety Officer (SSO) - The SSO shall ensure the instruments identified are employed in the manner directed by the HSO and action levels employed as contingencies marks for the application of engineering controls, personal protective equipment (PPE) use, and administrative controls are employed as directed. Additionally, he/she shall ensure the instruments are properly maintained and calibrated prior to use in the field. The SSO during specific air monitoring applications including STEL and TWA mode measurements will be responsible for operation and application of this specialty air monitoring employment duty. The

SSO is also responsible for addressing relevant Hazard Communication requirements (e.g., MSDS, chemical inventories, labeling, training, etc.) on each assigned project.

5.0 PROCEDURES

5.1 General

Direct-reading instruments such as a flame ionization detector are typically used to monitor for airborne releases that could present an inhalation threat to personnel, and to screen and bias environmental samples. Proper use of these instruments by trained, qualified personnel is essential to the validity of any acquired results. Also essential is that the devices are properly calibrated according to manufacturers instructions (and the specifications of this SOP), and that users of the instrument properly document results.

5.2 Use and Documentation of Results

As with any direct-reading instrument, understanding not only how - but when to use this instrument is essential to gathering relevant and valid data. This device will only respond to volatile organics in air that are combustible. Inappropriate instrument selection, use, or interpretation of instrument results by an unqualified user not only can yield inaccurate results, but could place personnel at risk of exposure to hazardous agents. Only personnel who are properly trained and authorized to use this device will be permitted to operate it.

It is essential that instrument operators understand and comply with the requirements to document results. This includes the need to document calibration results as well as operational readings. Calibration results must be recorded using Figure 5-1. Operational results can be recorded in several ways, including:

- Direct-Reading Instrument Response Data (Figure 5-2) - preferred method
- Boring Log Forms (Figure 5-3)
- Test Pit Log Forms (Figure 5-4)
- Log book entries

When using direct-reading instruments, it is important to monitor the air near the source of potential releases (e.g., drilling boreholes, tank entrances, drum openings, etc.) and at worker breathing zone areas. All readings should be recorded, including readings noted where background levels were not exceeded.

5.3 Principles of Operation

The MicroFID is a flame ionization detector used for the measurement of combustible organic compounds in air at parts per million levels. Permanent air gases (argon, carbon dioxide, nitrogen, oxygen, water vapor, etc.) are not ionized by the flame.

When the MicroFID is turned on, the display prompts you to turn on the hydrogen. The internal pump draws sample air in through MicroFID's inlet. This sample air provides the oxygen necessary for combustion in the hydrogen-fueled flame. When the proper ratio of hydrogen to air is present in the combustion chamber, the flame is automatically started with a glow plug. A thermocouple is used to monitor the status of the flame. When the sample passes through the flame the combustible organic compounds in the sample will be ionized. After the compounds have been ionized, they are subjected to

FIGURE 5-1

DOCUMENTATION OF FIELD CALIBRATION

SITE NAME: _____ PROJECT NO.: _____

Date of Calibration	Instrument Name and Model	Tetra Tech Instrument I.D. Number	Person Performing Calibration	Instrument Settings/Readings		Calibration Standard (Lot Number)	Remarks/ Comments
				Pre-Calibration Setting	Post-Calibration Reading		

FIGURE 5-2

DIRECT-READING INSTRUMENT RESPONSE DATA

SITE NAME: _____

PROJECT NO.: _____

PAGE OF

Date and Time(s)	Instrument Operator Name	Instrument Used	Instrument Reading and Duration	Location (e.g., borehole vs breathing zone)	Operation(s) Being Performed	Personnel in Vicinity at Time of Readings and Level of PPE Worn
Example 12-12-91/14:30	Joe Field	HNU 101	15 ppm/15 min.	breathing zone	sample location no. 12	Jim Technician/Level B George Grunt/Level B

FIGURE 5-2 (Continued)

SITE NAME: _____

PROJECT NO.: _____

PAGE _____ OF ____

Date and Time(s)	Instrument Operator Name	Instrument Used	Instrument Reading and Duration	Location (e.g., borehole vs breathing zone)	Operation(s) Being Performed	Personnel in Vicinity at Time of Readings and Level of PPE Worn

FIGURE 5-3

BORING LOG

Page ___ of ___

PROJECT NAME: _____ BORING NUMBER: _____
PROJECT NUMBER: _____ DATE: _____
DRILLING COMPANY: _____ GEOLOGIST: _____
DRILLING RIG: _____ DRILLER: _____

Sample No. and Type or RQD	Depth (FL) or Run No.	Blows / 6" or RQD (%)	Sample Recovery / Sample Length	Lithology Change (Depth/FL) or Screened Interval	MATERIAL DESCRIPTION: Soil Density/ Consistency or Rock Hardness	Color	Material Classification	USCS *	Remarks	PID/FID Reading (ppm): Sample	Sampler BZ	Borehole**	Driller BZ**

* When rock coring, enter rock brokeness.

** Include monitor reading in 6 foot intervals @ borehole. Increase reading frequency if elevated response read.

Remarks: _____

Drilling Area Background (ppm): [ ]

Converted to Well: Yes _____ No _____ Well I.D. #: _____

FIGURE 5-4

Page ___ of ___

TEST PIT LOG

PROJECT NAME: _____ TEST PIT NUMBER: _____
PROJECT NUMBER: _____ DATE: _____
LOCATION: _____ GEOLOGIST: _____

Depth (Ft.)	Lithology Change (Depth/Ft.)	MATERIAL DESCRIPTION: Soil/Waste Characteristics (lithology, density, color, etc.)	USCS	Remarks	PID/FID READING: Source (ppm)	PID/FID READING: BZ (ppm)

TEST PIT CROSS SECTION AND / OR PLAN VIEW

REMARKS: _____

PHOTO LOG: _____

a continuous electric field between the repeller electrode at the jet and the collector electrode. The ions in the electric field generate a current which is proportional to the concentration of the ionized molecules in the ionization chamber. An electrometer circuit converts the current to a voltage that is then fed to the microprocessor which interprets the current in units of ppm. After the sample passes through the flame and has become ionized, it is vented from the detector through a flame arrestor. The flame arrestor prevents the flame from igniting any flammable gases present in the working atmosphere.

MicroFID is strictly an organic compound detector. It does not respond to inorganic compounds. MicroFID's sensitivity is highly dependent on chemical structure and bonding characteristics. The combustion efficiency of a compound determines its sensitivity. Simple saturated hydrocarbons (methane, ethane, etc.) posses high combustion efficiencies and are among the compounds that produce the highest MicroFID response. Organic fuels (acetylene, refined petroleum products), burn easily and are also extremely well detected.

The presence of substituted functional groups (amino, hydroxyl, halogens) on a simple hydrocarbon reduces its combustion efficiency and the MicroFID's sensitivity to the compound. For example, methanol and chloromethane are detectable with MicroFID, but not at the same sensitivity as methane. The number of carbon atoms can also affect the instrument's sensitivity due to substitution. For example, MicroFID is more sensitive to n-butanol than it is to methanol. For additional information regarding response factors of the MicroFID, consult the manufacturer's of the User's Manual.

Beginning Operation

The MicroFID can be operated without the activation of the flame to print or review logged data. In this way, the hydrogen fuel is conserved.

MicroFID will attempt to ignite the flame once the flow of hydrogen gas has been started. If the MicroFID has not been used for a while, it is possible that the gas supply lines are filled with air. If the flame cannot be started, MicroFID will begin a 30 second purge cycle. During the purge cycle it will flush the gas supply lines with hydrogen. After the purge cycle, it will attempt to light the flame again. If it fails again, another purge cycle will be performed and MicroFID will try a third time to ignite the flame. The following steps summarize proper start-up procedures.

1. Turn the instrument on by pressing the front of the On/Off switch. When the instrument is powered up, the version number and creation date of the instrument software are displayed. Press ENTER.

2. You will be prompted to start the flame. If you do not want to start the flame, use the ARROW keys to select "No Flame Needed" and press ENTER. To start the flame, use the ARROW keys to select Start Flame and press ENTER.

3. If you selected "Start Flame," MicroFID will prompt you to turn on the hydrogen. Turn the shut-off valve counterclockwise to start the flow of hydrogen and press ENTER.

4. The pump will start and MicroFID will then ignite the flame. You will hear a small pop when the flame has been ignited. Once the flame has been started the message "Detector flame has been started OK" will be displayed followed by the default display.

The default display provides the following information: instrument status, current detected concentration, event name (if the datalogger is on), time, and date. If an event name is longer than three characters, the bottom line of the display will scroll through the information.

The instrument status appears at the left of the upper line of the display and on the Print and Graph outputs. Each status has a priority assigned to it. If more than one status is in effect, then the status with the highest priority is displayed until the condition is corrected or until the option is turned off.

5.4 Calibration

The calibration (CAL) key is used to calibrate MicroFID. Before beginning calibration, ensure that you have a reliable source of both zero air and calibration gas. To document calibration efforts, field personnel will record information on the Documentation of Field Calibration Form (Figure 5-1), or the same information in the calibration/maintenance log book assigned to an instrument. A brief description of the functions under the CAL key are as follows:

1. When you press the CAL key you will first be prompted to select a Cal Memory. Each Cal Memory stores a unique zero point, sensitivity setting, response factor and alarm level.

2. You will then be prompted to enter a response factor. Refer to the manufacturer's User's Manual for a list of response factors. If the compound is not listed in that reference, or if you are measuring gas mixtures, enter a value of 1.00. The concentration detected by MicroFID will be multiplied by the response factor before it is displayed and logged.

3. Next select Low Range or High Range operation. Use Low Range if you are sampling concentrations between 0.5 and 2000 ppm (methane equivalents). Use High Range if you are sampling concentrations between 10 and 50,000 ppm (methane equivalents).

4. You will now be prompted to connect a supply of zero air. You may use ambient air or, for best results, use a clean Tedlar bag filled with zero grade air. In most cases, ambient air will be used provided calibration is performed in an area in which interfering airborne contaminants are not present. If using ambient air, press <ENTER> to being zeroing.

5. If you are using a charcoal filter to clean ambient air, connect the filter by loading the Teflon ferrules into the nut (the ferrules and the nut are supplied with the filter). Connect the nut to MicroFID's inlet. Do not tighten the nut. Remove the charcoal filter from its plastic bag and insert it into the nut. Finger tighten the nut onto the inlet. If the filter is not secure, ensure you have inserted the tube far enough into the nut. Do not over-tighten the fitting. Press <ENTER> and the MicroFID will set its zero point. NOTE: The charcoal filter does not filter methane or ethane. If these compounds are present, use a gas bag with a supply of commercial zero air.

6. If you are using a Tedlar bag filled with zero air, connect the bag to the inlet. Open the bag and press <ENTER>. MicroFID will set its zero point.

7. After MicroFID has set its zero point, you can then enter the concentration of the calibration gas (span gas), and then connect the Tedlar bag adapter to the inlet. Open the bag and press <ENTER>. MicroFID sets its sensitivity. Note: You must have a supply of calibration gas ready before calibrating MicroFID. When calibrating MicroFID, ensure the instrument is level. If MicroFID is tilted from side to side, gravity will affect the flame height and cause erroneous readings.

8. When MicroFID's display reverts to normal, it is calibrated and ready for use. Remove the Tedlar bag from the inlet.

9. Press the ALARM key and enter the alarm level for the selected CAL memory.

5.5 Routine Maintenance

5.5.1 Battery Charging

A fully charged battery will power the MicroFID for approximately 15 hours. If the instrument is to be used for more than 15 hours, carry a spare battery pack. Battery life is reduced if the instrument is turned off and then on again repeatedly.

When the instrument status displays "LoBat," the battery pack requires changing. When the "LoBat" status is displayed, you have a few minutes of operation left. MicroFID will turn itself off before the battery pack becomes critically low.

To remove the battery pack:

1. Stop the flow of hydrogen gas by turning the hydrogen shut-off valve fully clockwise. Turn the instrument off by pressing the On/Off switch twice.

2. Use the MicroFID multi-tool to loosen the two captive screws in the bottom of the battery pack.

3. A retainer at the rear of the instrument helps secure the battery pack to the instrument. Free the battery pack from the instrument.

4. Connect the charged battery pack to the retainer at the rear of the instrument.

5. Retighten the two captive screws and the bottom of the battery pack.

To charge the battery pack:

1. Ensure the correct plug is installed on the line cord of the battery charger.

2. Plug the charger into the jack located on the front of the battery pack.

3. Plug the charger into an AC outlet. The LED, on the battery pack indicates the charge state. Red indicates the battery is being charged. Green indicates the battery is fully charged and ready for use. It is normal for a fully charged battery to indicate it is charging (red light) when first plugged in. The LED will turn green as the battery charges.

4. When the battery pack is charged remove the charger, first from the wall outlet then from the battery pack.

Charging a fully discharged battery pack will take approximately 8 hours. Leaving the charger connected to a charged battery pack will not harm the battery or the charger in any way. If a battery pack is to be left indefinitely, leave it connected to the charger so that it will be fully charged and ready for operation.

5.5.2 Emptying the Hydrogen Cylinder

When you transport the MicroFID, you should empty the internal hydrogen cylinder and then refill it when you arrive at your destination.

To empty the cylinder:

1. Take the instrument outdoors, or to a well-ventilated area, at least 25 feet from any potential sources of ignition.

2. Turn the MicroFID off and open the hydrogen shut-off valve.

3. Remove the battery pack as described above.

4. Locate the purge outlet. It is located on the underside of the instrument.

5. Use the MicroFID multi-tool to turn the screws counterclockwise. Loosen the screw but do not remove it.

6. Leave the instrument so that the purge outlet is facing up. If the purge outlet is facing down, hydrogen will vent into MicroFID's case.

7. If the cylinder is full, it will take approximately 15 minutes to empty.

8. Watch the Contents gauge. When the cylinder is empty, close the purge outlet. Use the MicroFID multi-tool to turn the screw clockwise.

9. Replace the battery pack as discussed above.

5.5.3 Replacing the Sample Inlet Filter

MicroFID is equipped with a combined dust and water filter to reduce detector contamination. As the filter collects dust, MicroFID's inlet flow rate and sensitivity decrease. The filter will not allow water to pass through, but the filter will not stop gases and vapors.

Replace the filter on a weekly basis, or more frequently if MicroFID is used in a dusty or wet environment. You must replace the filter if MicroFID has been exposed to liquid water. The pump will sound labored when the filter requires replacement.

1. Turn off the instrument and unscrew the filter housing from the detector housing. Be careful not to lose the o-ring seal.

2. Remove the Teflon/Polypropylene filter and install the new filter. Place the filter in the filter housing with the Teflon side facing down into the filter housing and the mesh side facing the MicroFID. Handle the filter disk only by the edges. The mesh may be damaged or contaminated by excessive handling. Use forceps if possible.

3. Replace the filter housing.

4. Calibrate the CAL Memories that you are using before continuing operation.

5.6 Troubleshooting

This section provides guidance for troubleshooting the MicroFID. If problems are not corrected through these troubleshooting methods, contact the Photovac Service Department.

5.6.1 MicroFID Fault Messages

When the "Check" status is displayed, MicroFID's operation is compromised. Press the <TUTOR> key for a two-line description of the fault. One exception is the flame out fault. When a flame out fault occurs, the instrument status changes to "NoFlm."

Fault: Detector flame has gone out.

Cause: The hydrogen gas has run out.

Action: Ensure the shut-off valve is open. Check the hydrogen contents gauge on the side of the instrument and refill the hydrogen cylinder if necessary. Ensure the cylinder purge outlet has been closed.

Cause: Oxygen supply is deficient (Note: This is a Level B PPE condition).

Action: Ensure there is an adequate supply of oxygen. If you are sampling very high concentrations it is possible you are sampling above the flame out concentration. The flame out concentration for methane is approximately 52,000 ppm (5.2 percent methane in air).

A minimum of 17 percent oxygen is required to start the hydrogen flame. The oxygen is supplied from the sample as it is drawn in by the pump. A minimum of 10 percent oxygen is required to maintain the hydrogen flame.

Flame out also may occur when sampling enclosed or confined spaces where vapors and gases cannot escape. Watch for indications of increased flame height such as erratic readings or sudden high concentrations followed by a flame out fault.

If you will be using the MicroFID in a highly contaminated area where it is possible that the oxygen content will fall below 10 percent, watch for indication of reduced flame height such as lowered detection limits or a flame out fault.

Cause: High concentrations of flammable gases (gases within their flammable range) are present. High concentrations of flammable gases can act as an additional fuel source. When this happens, the flame height may increase beyond the confines of the combustion chamber. The hydrogen supply will then be cut-off and the flame will go out. Monitor LEL conditions and observe action levels specified in the Health and Safety Plan.

Action: Move to a location where there is an adequate supply of air and restart the flame. See the information above. Watch for indications of increased flame height such as erratic readings or sudden height concentrations followed by a flame out fault.

Cause: Exhaust port is blocked.

Action: At low temperatures, water vapor, a by-product of the hydrogen flame, may condense at the exhaust port. At sub-zero temperatures the water will freeze and obstruct the exhaust port. If the exhaust port becomes obstructed, pump operation will be inhibited. Flame out may also result. Operate the MicroFID within the operating temperature range 41 to 105 degrees Fahrenheit. In the event that the flame arrestor becomes clogged, contact the Photovac Service Department.

Cause: Sample line is blocked.

Action: Ensure the sample line is not obstructed in any way. If you are using the long sample probe, ensure flow is maintained through the entire length of tubing.

Cause: Inlet filter is plugged.

Action: Replace the inlet filter.

Fault: Signal from zero gas is too high.

Cause: Contamination of sample line or fittings before the detector.

Action: Clean or replace the sample line of the inlet filter.

Cause: Span gas is used instead of zero gas.

Action: Ensure clean gas is used to zero the MicroFID. Mark the calibration and zero gas Tedlar bags clearly.

Cause: Ambient air is contaminated.

Action: If you are unsure about the quality of the ambient air, use a charcoal filter or a supply of commercial zero grade air.

Cause: Hydrogen supply is contaminated.

Action: Hydrogen may react with the carbon element of the steel tank to produce methane. This will only occur if the cylinder is in poor condition and if the hydrogen has a high moisture content. Replace the hydrogen tank. Empty and refill the MicroFID internal cylinder with fresh hydrogen.

Fault: Signal from the calibration gas is too small

Cause: Calibration gas and zero air are switched.

Action: Ensure calibration gas is used to calibrate the MicroFID. Mark the calibration and zero gas Tedlar bags clearly. Ensure the calibration gas is of a reliable concentration.

Fault: Detector field voltage is low.

Cause: Internal fault in electronics.

Action: Contact the Photovac Service Department.

Problem: No instrument response detected, yet compounds are known to be present.

Cause: MicroFID has not been calibrated properly.

Action: Ensure calibration gas is of a reliable concentration and then calibrate the instrument. After the instrument has been calibrated, sample the Tedlar bag of calibration gas. A reading equivalent to the calibration gas should be displayed. If not, contact the Photovac Service Department.

Action: When calibrating the MicroFID, ensure the instrument is level. If the MicroFID is tilted side to side, gravity can affect the flame height and cause erroneous readings. If the sampling location is difficult to reach without tilting the instrument, use the long sample probe.

Cause: Background contamination from the hydrogen.

Action: It is possible that the hydrogen has become contaminated and is contributing a high background signal. If the hydrogen supply tank is more than 6 months old it should be replaced with a new cylinder. When ordering hydrogen, specify ultra-high purity (99.999 percent pure). Empty the MicroFID hydrogen cylinder (as described in Section 5.5.2 of this SOP) and then refill with hydrogen from the new cylinder.

Problem: **Date and time settings are not retained.**

Cause: MicroFID has not been used for 3 months or more and the internal battery (not the external battery pack) has been discharged.

Action: Turn MicroFID on and allow it to run until a "LoBat" status appears. This will take approximately 15 hours. Remove the battery pack and recharge it overnight. Repeat this procedure for 3 or 4 days. While MicroFID is running the internal battery is charging.

Problem: **Cannot fill the internal hydrogen cylinder to 1800 psi.**

Cause: Supply tank has less than 1800 psi of pressure. You can only fill the internal cylinder to a pressure of less than or equal to the tank pressure.

Action: Fill the internal cylinder to the pressure of the tank or replace the tank with a full one.

Cause: The hydrogen purge outlet is open.

Action: Close the outlet and fill the cylinder.

Cause: There is a problem with the refill adapter.

Action: Contact the Photovac Service Department

Problem: **Instrument status shows "Over."**

Cause: Rapid change in signal level. The detector electronics have been momentarily saturated.

Action: Wait a few seconds for the status to return to "Ready."

Cause: The detector has become saturated.

Action: Move the MicroFID to a location where it can sample clean air. Sample zero air until the reading stabilizes around "0." If you were using Low Range, switch to High Range. Calibrate the CAL Memory you were using when the "Over" status appeared.

Problem: **Display contrast bars are on or display is blank.**

Cause: Battery pack is critically low.

Action: Recharge the battery pack or connect the MicroFID to the battery charger.

Cause: The battery pack is not connected to the instrument properly.

Action: Ensure the battery pack has been aligned correctly. Ensure the battery pack is secured by the retainer at the rear of the instrument.

Problem: **Sample flow rate varies from 600 ml/min. +/-10 percent.**

Cause: Inlet filter has not been installed.

Action: Install an inlet filter.

Cause: Inlet filter has not been properly tightened onto the detector cap.

Action: Finger-tighten the filter cap.

Cause: Inlet filter is plugged.

Action: Replace the inlet filter.

Cause: Pump has been damaged.

Action: Contact the Photovac Service Department

Cause: Exhaust port is blocked.

Action: At low temperatures, water vapor (a by-product of the hydrogen flame) may condense at the exhaust port. At sub-zero temperatures the water will freeze and obstruct the exhaust port. If the exhaust port becomes obstructed, pump operation will be inhibited. Flame out may also result. Operate the MicroFID within the operating temperature range 41 to 105 degrees Fahrenheit. In the event that the flame arrestor becomes clogged, contact the Photovac Service Department.

Problem: **Flame will not ignite.**

Cause: The hydrogen gas has run out.

Action: Ensure the shut-off valve is open. Check the hydrogen contents gauge on the side of the instrument and refill the hydrogen cylinder if necessary. Ensure the hydrogen purge outlet is closed.

Cause: Oxygen supply is deficient.

Action: Ensure there is an adequate supply of oxygen. Do not attempt to ignite the flame in a location where there is the suspicion of encountering greater than 10,000 ppm methane or the equivalent concentration of a flammable gas. Move to a location where there are lower concentrations, start the flame and then begin sampling higher concentrations. Monitor for LEL conditions, following action levels specified in the Health and Safety Plan. If the flame goes out while you are sampling very high concentrations, it is possible you are sampling above the flame out concentration. The flame out concentration of methane is approximately 52,000 ppm (5.2 percent methane in air). A minimum of 17 percent oxygen is required to start the hydrogen flame. Oxygen is supplied from the sample as it is drawn in by the pump. A minimum or 10 percent oxygen is required to maintain the hydrogen flame. .

Cause: Exhaust port is blocked.

Action: At low temperatures, water vapor (a by-product of the hydrogen flame) may condense at the exhaust port. At sub-zero temperatures the water will freeze and obstruct the exhaust port. If the exhaust port becomes obstructed, pump operation will be inhibited. Flame out may also result. Operate the MicroFID within the operating temperature range 41 to 105 degrees Fahrenheit. In the event that the flame arrestor becomes clogged, contact the Photovac Service Department.

Cause: Hydrogen supply lines are full of air.

Action: If MicroFID has not been operated for some time, it is possible that the hydrogen supply lines contain air. Fill the hydrogen cylinder and then open the hydrogen shut-off valve. Allow the hydrogen to purge the system for about 5 minutes and then turn MicroFID on and start the flame.

Cause: Hydrogen lines are blocked.

Action: Contact the Photovac Service Department.

Problem: **Liquid has been aspirated.**

Cause: MicroFID has been exposed to a solvent that can pass through the Teflon/Polypropylene filter.

Action: Contact the Photovac Service Department.

5.7 Transporting MicroFID

When you transport MicroFID, you should empty the internal hydrogen cylinder and then refill it when you arrive at your destination (see Section 5.5.2 of this SOP). If you are traveling by passenger aircraft, you **must** empty the hydrogen cylinder. You cannot transport MicroFID by passenger aircraft with hydrogen in the cylinder.

The MicroFID can be shipped to sites. However, if shipment is to be performed while the cylinder still contains hydrogen, a Hazardous Materials Airbill must be filled out and the package must be properly marked and labeled. Examples of various completed forms are provided as Figures 6-1 and 6-2.

6.0 SHIPPING

The Photovac may be shipped as cargo or carried on as luggage providing there is no hydrogen fuel source or calibration gas cylinder accompanying the kit. **Only personnel who have been properly trained are permitted to offer a hazardous material for shipment.** The "Shipping Hazardous Materials" course offered by Tetra Tech NUS is considered acceptable training for this purpose. Specific instructions on packaging, labeling, and otherwise preparing a hazardous material shipment are presented in the Student Manual that accompanies the course. If shipping or transporting the hydrogen fuel source, a Hazardous Materials (or Dangerous Goods) Airbill such as the example in Figure 6-1 must be completed. When shipping or transporting the calibration gas, a separate Airbill (such as the one illustrated in Figure 6-2) must be prepared.

7.0 REFERENCES

MicroFID Handheld Flame Ionization Detector User's Manual, 1995.

Student Manual from "Shipping Hazardous Materials" course, Tetra Tech NUS, 1999.

FIGURE 6-1

EXAMPLE HAZARDOUS AIRBILL FOR HYDROGEN

FedEx. Dangerous Goods Airbill

2887300
7180827

Sender's Copy
RETAIN FOR 1 YEAR
RETAIN THIS COPY FOR YOUR RECORDS

The World On Time.

1 From (please print and press hard)

Date _____ Sender's FedEx Account Number _____

Sender's Name _____ Phone ( )

Company _____

Address _____ Dept./Floor/Suite/Room

City _____ State _____ ZIP _____

2 Your Internal Billing Reference Information

3 To (please print and press hard)

Recipient's Name TOM PATTON Phone (412) 262 4583

Company TETRA TECH NUS

Address SPRING RUN RD EXT STE 140 B 1 (We Cannot Deliver to P.O. Boxes or P.O. ZIP Codes) Dept./Floor/Suite/Room

City CORAOPOLIS State PA ZIP 15108

For HOLD at FedEx Location check here

For WEEKEND Delivery check here

4a Express Package Service

4b Express Freight Service

Questions? Call 1•800•Go•FedEx® (800)463-3339

5 Packaging

Other Packaging

Dangerous Goods cannot be shipped in FedEx packaging.

6 Special Handling

Dangerous Goods as per attached Shipper's Declaration

Cargo Aircraft Only

7 Payment

Sender Recipient Third Party Credit Card Cash/Check

Total Packages Total Weight Total Declared Value* $ .00 Total Charges

Signature Release Unavailable

FedEx Tracking Number 807286973876 Form I.D. No. 0204

355

Page 1 of 1 Pages

Two completed and signed copies of this Declaration must be handed to the operator.

TRANSPORT DETAILS

Airport of Departure:

Airport of Destination:

WARNING

Failure to comply in all respects with the applicable Dangerous Goods Regulations may be in breach of the applicable law, subject to legal penalties. This Declaration must not, in any circumstances, be completed and/or signed by a consolidator, a forwarder or an IATA cargo agent.

Shipment type: NON-RADIOACTIVE

NATURE AND QUANTITY OF DANGEROUS GOODS

Dangerous Goods Identification

Proper Shipping Name	Class or Division	UN or I.D. No.	Packing Group	Subsidiary Risk	Quantity and Type of Packaging	Packing Inst.	Authorization
Hydrogen Compressed	2.1	UN 1049			1 Plastic Box X 1.0 Kg	200	

Additional Handling Information

Prepared for AIR TRANSPORT according to: (Customer MUST check one) 49 CFR ICAO / IATA

I hereby declare that the contents of this consignment are fully and accurately described above by the proper shipping name and are classified, packaged, marked, and labelled/placarded, and are in all respects in proper condition for transport according to applicable international and national governmental regulations.

Name/Title of Signatory

Place and Date

Signature

Emergency Telephone Number (Required for US Origin or Destination Shipments) 1-800-535-5053 Infotrac

IF ACCEPTABLE FOR PASSENGER AIRCRAFT, THIS SHIPMENT CONTAINS RADIOACTIVE MATERIAL INTENDED FOR USE IN, OR INCIDENT TO, RESEARCH, MEDICAL DIAGNOSIS, OR TREATMENT.

FIGURE 6-2

EXAMPLE HAZARDOUS AIRBILL FOR METHANE IN AIR

FedEx. *Dangerous Goods Airbill*

Sender's Copy — *RETAIN FOR 1 YEAR* — RETAIN THIS COPY FOR YOUR RECORDS

The World On Time

1 From (please print and press hard)

Date _____ Sender's FedEx Account Number _____

Sender's Name _____ Phone ( )

Company _____

Address _____ Dept./Floor/Suite/Room

City _____ State _____ ZIP _____

2 Your Internal Billing Reference Information

3 To (please print and press hard)

Recipient's Name Tom Patton Phone (412) 262-4583

Company Tetra Tech NUS

Address Spring Run Road Extension, Suite 140 (We Cannot Deliver to P.O. Boxes or P.O. ZIP Codes) Dept./Floor/Suite/Room

City Coraopolis State PA ZIP 15108

For HOLD at FedEx Location check here: Hold Weekday; Hold Saturday

For WEEKEND Delivery check here: Saturday Delivery; NEW Sunday Delivery

4a Express Package Service: FedEx Priority Overnight; FedEx Standard Overnight; FedEx 2Day; FedEx Express Saver

4b Express Freight Service: FedEx Overnight Freight; FedEx 2Day Freight; FedEx Express Saver Freight

(Call for delivery schedule. Some restrictions apply. See back for details / descriptions of freight services.)

Questions? Call 1-800-Go-FedEx® (800)463-3339

5 Packaging: ☒ Other Packaging — Dangerous Goods cannot be shipped in FedEx packaging.

6 Special Handling: ☒ Dangerous Goods as per attached Shipper's Declaration; ☐ Cargo Aircraft Only

7 Payment: Sender; Recipient; Third Party; Credit Card; Cash/Check

Total Packages | Total Weight | Total Declared Value $ .00 | Total Charges $

Signature Release Unavailable

FedEx Tracking Number 807286974806 Form I.D. No. 0204 355

Page 1 of 1 Pages

Two completed and signed copies of this Declaration must be handed to the operator.

TRANSPORT DETAILS

This shipment is within the limitations prescribed for: (delete non-applicable) PASSENGER AND CARGO AIRCRAFT

Airport of Departure:

Airport of Destination:

WARNING

Failure to comply in all respects with the applicable Dangerous Goods Regulations may be in breach of the applicable law, subject to legal penalties. This Declaration must not, in any circumstances, be completed and/or signed by a consolidator, a forwarder or an IATA cargo agent.

Shipment type: (delete non-applicable) NON-RADIOACTIVE ~~RADIOACTIVE~~

NATURE AND QUANTITY OF DANGEROUS GOODS

Dangerous Goods Identification

Proper Shipping Name	Class or Division	UN or I.D. No.	Packing Group	Subsidiary Risk	Quantity and Type of Packaging	Packing Inst.	Authorization
Compressed Gas N.O.S. (mixture Nitrogen and Oxygen)	2.2	UN 1956			1 Plastic box x 0.56 Kg	200	

Additional Handling Information

Prepared for AIR TRANSPORT according to: (Customer MUST check one) ☐ 49 CFR ☒ ICAO / IATA

I hereby declare that the contents of this consignment are fully and accurately described above by the proper shipping name and are classified, packaged, marked, and labelled/placarded, and are in all respects in proper condition for transport according to applicable international and national governmental regulations.

Name/Title of Signatory; Place and Date; Signature (see warning above)

Emergency Telephone Number (Required for US Origin or Destination Shipments) 1-800-535-5053 InfoTRAC

IF ACCEPTABLE FOR PASSENGER AIRCRAFT, THIS SHIPMENT CONTAINS RADIOACTIVE MATERIAL INTENDED FOR USE IN, OR INCIDENT TO, RESEARCH, MEDICAL DIAGNOSIS, OR TREATMENT.

TABLE OF CONTENTS

SECTION **PAGE**

1.0 PURPOSE **2**

2.0 SCOPE **2**

3.0 GLOSSARY **2**

4.0 RESPONSIBILITIES **2**

5.0 PROCEDURES **2**

5.1 INTRODUCTION 2
5.2 AIR SAMPLING 3
5.3 MEDIA FOR COLLECTING AIR SAMPLES 4
5.3.1 Other Methods 5
5.3.2 NIOSH Methods 5
5.4 COLLECTION AND ANALYSIS 5
5.4.1 Selecting Monitoring Constituents 5
5.4.2 Specifying Meteorological Considerations 5
5.4.3 Design of Monitoring Network 6
5.4.4 Air Monitoring Documentation/Data Reduction 6
5.5 PERSONNEL MONITORING 7
5.6 CALIBRATION 7
5.7 METEOROLOGICAL CONSIDERATIONS 7

6.0 REFERENCES **8**

7.0 ATTACHMENTS **8**

1.0 PURPOSE

The objective of this Standard Operating Procedure is to specify the proper approach and methodologies to identify and quantify airborne chemical contamination levels through the use of direct reading instrumentation and air sample collection. The results of these activities provide vital information for site characterization and risk assessment considerations.

2.0 SCOPE

Applies to all Brown & Root Environmental site activities where the potential for personnel exposures to respiratory health hazards exists.

3.0 GLOSSARY

Direct Reading Instruments (DRIs) - Instrumentation operating on various detection principles such as flame ionization or photoionization providing real time readings of ambient contaminants in air.

Personal/Area Air Sampling - Personal/area air sampling is conducted utilizing an air sampling pump and a specific collection media to quantify airborne contaminants.

Meteorological Considerations - Meteorological information must be collected on site to properly determine air sampling results, as well as aid in the characterization of contaminant potential plume migration and intensity. This information will also be used to support the selection of sampling locations and determine which samples should be analyzed. The meteorological information will be used to estimate downwind concentration levels based on short-term field levels encountered at the source.

4.0 RESPONSIBILITIES

Project Manager (PM) - Responsible for all aspects of project implementation and direction. The project manager is responsible for providing the necessary resources in support of all air monitoring and sampling applications.

Field Operations Leader (FOL) - Responsible for implementing the air monitoring program as detailed in approved project plans for the specific site. Air monitoring requirements will be included in both the Field Sampling and Analysis Plan (FSAP) and the site-specific Health and Safety Plan (HASP).

Health and Safety Officer (HSO) - The health and safety officer provides technical assistance to the FOL concerning air monitoring and sampling applications, collection methodologies, data interpretations, and establishes action items based on results. This information is further used to assess atmospheric migration of airborne chemical contaminants.

5.0 PROCEDURES

5.1 Introduction

Air monitoring is used to help establish criteria for worker safety, document potential exposures, and determine protective measures for the site personnel and the surrounding public. To accomplish this, it is necessary for an effective air surveillance program to be tailored to meet the conditions found at each work site.

During site operations, data are collected concerning air contaminants representative for site operations. Surveillance for vapors, gases, and particulates is performed using DRIs, air sampling systems, and

meteorological considerations. DRIs can be used to detect many organics as well as a few inorganics and can provide approximate total concentrations through applications of relative response ratios of contaminants to reference standards. If specific chemicals (organics and inorganics) have been identified, then properly calibrated DRIs can be used for more accurate onsite assessments.

The most accurate method for evaluating any air contaminant is to collect samples and analyze them at a qualified laboratory. Although accurate, this method presents two disadvantages: (1) cost and (2) the time required to obtain results. Analyzing large numbers of laboratory samples can be expensive, especially if results are needed quickly. Onsite laboratories tend to reduce the turnaround time, but unless they can analyze other types of samples, they may also be costly. In emergencies, time is often not available for laboratory analysis of samples either on site or off site.

To obtain air monitoring data rapidly at the site, DRI utilizing flame ionization detectors (FIDs), photoionization detectors (PIDs), and other detection methodology can be used. Some of these may be used as survey instruments or operated as gas chromatographs. As gas chromatographs, these instruments can provide real-time, qualitative/quantitative data when calibrated with standards of known air contaminants. Combined with selective laboratory analysis of samples, they provide a tool for evaluating airborne organic hazards on a real-time basis and at a lower cost than analyzing samples in a laboratory.

5.2 Air Sampling

For more complete information about air contaminants, measurements obtained with DRIs can be supplemented by collecting and analyzing air samples. To assess air contaminants more thoroughly, air sampling devices equipped with appropriate collection media may be placed at various locations throughout the area and on persons within at-risk occupations. These samples provide air quality information for the period of time they are taken, and can indicate contaminant types and concentrations over the sampling period. As a result, careful selection of sampling types, numbers, and locations, by a qualified health and safety professional is essential to obtain representative information. As data is obtained (from the analysis of samples, DRIs, knowledge about materials involved, site operations, and the potential for airborne toxic hazards), adjustments can be in the types of samples, number of samples collected, frequency of sampling, and analysis required. In addition to air samplers, area monitoring stations may also include DRIs equipped with recorders and operated as continuous air monitors.

Area air sampling locations may be located as required by project and site needs in various places including, but not limited to:

- Upwind - Because many hazardous incidents occur near industries or highways that generate air pollutants, samples may be taken upwind of the site to establish background levels.

- Support Zone (SZ) - Samples may be taken near the command post or other support facilities to ensure that they are, in fact, located in an unaffected area, and that the area remains clean throughout operations at the site.

- Contamination Reduction Zone (CRZ) - Air samples may be collected along the decontamination line to ensure that decontamination workers are properly protected and that onsite workers are not removing their respiratory protective gear in a contaminated area.

- Exclusion Zone (EZ) - The Exclusion Zone presents the greatest risk of release/generation of contaminants and requires the highest concern for air sampling. The location of sampling stations shall be based upon factors such as hot-spots detected by DRIs, types of substances present, and potential for airborne contaminants. The data from these stations, in conjunction with intermittent walk-around surveys with DRIs, are used to verify the selection of proper levels of worker protection and EZ boundaries as well as to provide a continual record of air contaminants.

- Downwind - One or more sampling stations may be located downwind from the site to indicate if any air contaminants are leaving the site. If there are indications of airborne hazards in populated areas, appropriate response action must be taken and additional samplers should be placed downwind. Downwind locations are further determined based on meteorological considerations concerning generation, air plume migration, and intensity.

5.3 Media for Collecting Air Samples

Hazardous material incidents and abandoned waste sites can involve thousands of potentially dangerous substances, such as gases, vapors, and particulates that could become airborne. A variety of media are used to collect these substances. Sampling systems typically include a calibrated air sampling pump, which draws air into selected collection media. It is essential that appropriate, approved air sampling methodologies (such as those published by NIOSH, OSHA, and EPA) be followed for the collection of each specific analyte. Some of the most common types of samples and the collection media used for them are described in the following information:

One of the most common types of collection media is activated carbon which is an excellent adsorbent for most organic vapors. However, other solid adsorbents (such as Tenax, silica gel, and Florisil) are routinely used to sample specific organic compounds or classes of compounds that do not adsorb or desorb well on activated carbon. To avoid stocking a large number of sorbents for all substances anticipated, a smaller number is generally chosen for collecting the widest range of materials or for substances known to be present. The vapors are collected using an industrial hygiene personal sampling pump with either one sampling port or a manifold capable of simultaneously collecting samples on several sorbent tubes (provided that sampling parameters such as flow rates and sample volumes are satisfied). For example, in a manifold with four sorbent tubes (or on individual pumps with varying flow rates), the tubes might contain:

- Activated carbon to collect vapors of materials with a boiling point above zero degrees Centigrade. Common materials collected on activated carbon include organic vapors such as solvents, BTEX, and ketones.

- A porous polymer, such as Tenax or Chromosorb, to collect substances (such as high-molecular-weight hydrocarbons, organophosphorus compounds, and the vapors of certain pesticides) that adsorb poorly onto activated carbon. Some of these porous polymers also absorb organic materials at low ambient temperatures more efficiently than carbon.

- A polar sorbent, such as silica gel, to collect organic vapors (aromatic amines, for example) that exhibit a relatively high dipole moment.

- Another specialty absorbent selected for the specific site. For example, a Florisil tube could be used if polychlorinated biphenyls are expected.

- Liquid impingers - aldehydes, ketones, phosgene, phenols.

- Glass fiber filters, membrane filters, Teflon filters - Inorganics and other semivolatile compounds.

- Airborne particulates can be either solid or liquid. Examples of common particulate analytes include some metals, fibers such as asbestos, and condensed particulates such as welding fumes. Dusts, fumes, smoke, and fibers are dispersed solids; mists and fogs are dispersed liquids. For air sampling, most particulates are collected using glass fiber, mixed cellulose ester, or polyvinyl chloride filters, depending on the filter's ability to collect the subject material and its suitability for laboratory analysis. A cyclone is used to collect particles of respirable size. Atomic Absorption Spectrophotometry,

Emission Spectroscopy, Phase Contrast Microscopy, and other techniques are used to analyze various types of particulates. Direct-reading monitors are also used to quantify particulate concentrations, and are usually based on the light-scattering properties of the particulate matter.

5.3.1 Other Methods

Colorimetric detector tubes can also be used with a sampling pump when monitoring for some specific compounds. Passive organic vapor monitors can be substituted for the active monitoring if they are available for the types of materials suspected to be present at a given site.

5.3.2 NIOSH Methods

The National Institute for Occupational Safety and Health's (NIOSH) Manual of Analytical Methods, 4th ed., contains acceptable methods for collecting and analyzing air samples for a variety of chemical substances. Consult these volumes for specific procedures.

5.4 Collection and Analysis

Collection and analysis of air samples is a multi-faceted task, and is part of the overall air surveillance program. The program is structured to cover the following air pathway analyses:

5.4.1 Selecting Monitoring Constituents

Aplications within this program are accomplished using two considerations:

- Air surveillance for specific constituents is based on quantity of the pollutant and the likelihood for vapor release or generation.

- Controlling toxicity - These substances, even when represented in limited quantities, present the greatest threat to the public or worker safety, and influence environmental impact.

5.4.2 Specifying Meteorological Considerations

The following factors will influence sample collection:

- Wind direction and speed
- Sigma theta (atmospheric stability)
- Temperature
- Barometric pressure
- Humidity

These factors will provide information essential to properly arrive at accurate air sampling concentration results. This information is also used to identify how airborne chemical contaminants will react for modeling and for monitoring purposes. The results will provide indicators of plume movement, intensity, and dilution.

5.4.3 Design of Monitoring Network

The air surveillance network is structured to consider:

- Source characteristics (physical state; vapor release and/or generation; emission rates; and disturbance of the source impacting these aspects)
- Receptor sites (receptor sites are monitored and tracked based on priority)
- Meteorological consideration
- Air modeling input
- Data quality objectives

5.4.4 Air Monitoring Documentation/Data Reduction

5.4.4.1 Air Monitoring Documentation

Elements of the air surveillance program are used to provide documentation valuable to safely performing/containing site activities.

Air monitoring results from DRIs must be recorded, such as on instrument results reporting forms, or in the field logbook. This information, where applicable, will be correlated to air sampling information if/when collected.

Air sampling results for personnel and area measurement efforts must be validated, prior to notifying affected individuals. Personal air sampling results notification is accomplished through verbal or written communications.

Results of air monitoring/sampling activities can be identified on site maps. This information is used to structure operational zones and identify levels of protection.

5.4.4.2 Data Reduction

Data reduction combines and correlates the DRI results, air sampling results, and meteorological information to determine area and source airborne contaminant levels and movement.

All air sampling surveillance efforts must incorporate appropriate and approved NIOSH, OSHA, or EPA analytical methods. These procedures identify specific sample collection media, sampling methodologies, and analytical procedures. Sample analysis for health and safety considerations must be further supported by using American Industrial Hygiene Association accredited laboratories.

5.5 Personnel Monitoring

In addition to area atmospheric sampling, personnel monitoring -- both active and passive -- can be used to sample for air contaminants. Representative workers must be identified, and equipped with appropriate personal sampling systems to determine contaminants at specific locations or for specific work being performed. When sampling devices are placed on workers (generally within 1 foot of the mouth and nose) the results are used to indicate worker exposures.

5.6 Calibration

As a rule, the entire air sampling system shall be calibrated. Proper pre-and post-calibration activities are essential for correct operation and for accurate data. In some instances, additional calibration during the sampling period may be required. The overall frequency of calibration will depend upon the particular

sampling event, including the general handling and use of a given sampling system. Pump mechanisms shall be calibrated after repair, when newly purchased, and following suspected abuse. All DRIs will be calibrated according to manufacturers instructions. All calibration activities for both air monitoring and sampling equipment must be properly documented, such as through the use of a calibration form. This form will be kept on site throughout the life of the project. The calibration log will be submitted as documentation that instrument calibration was performed on a regular basis.

5.7 Meteorological Considerations

Meteorological information is an integral part of an air surveillance program. Data concerning wind speed and direction, temperature, barometric pressure, and humidity (singularly or in combination) are needed for:

- Selecting air sampling locations
- Calculating accurate air sampling results
- Calculating air dispersion
- Calibrating instruments
- Determining population at risk or environmental exposure from airborne contaminants

Knowledge of wind speed and direction is necessary to effectively place air samplers. In source-oriented ambient air sampling, samplers need to be located downwind (at different distances) of the source and others need to be placed to collect background samples. Shifts in wind direction must be known. Consequently, the samplers must be relocated or corrections made for these shifts. In addition, atmospheric simulation models for predicting contaminant dispersion and concentration need windspeed and direction as inputs for predictive calculations. Information may be needed concerning the frequency and intensity that winds blow from certain directions (windrose data). Consequently, the wind direction must be continually monitored when use of this type of data is contemplated.

Air sampling systems need to be calibrated before use. This must include corrections in the calibration curves for actual temperatures and pressures during the sampling event. After sampling, collected air volumes are also mathematically corrected for temperature and pressure conditions.

Air sampling is sometimes designed to assess population exposure (and frequently potential worker exposure). Air samplers are generally located in population centers, irrespective of wind direction. Even in these instances, however, meteorological data is needed for air dispersion modeling. Models are then used to predict or verify population-oriented sampling results.

Proper data is collected by having meteorological stations on site or by obtaining the information from one or more of several government or private organizations, which routinely collect this data. The choice of how information is obtained depends on the availability of reliable data at the location desired, resources needed to obtain meteorological equipment, accuracy of information needed, and use of information.

The collection, handling, and analysis of air samples is an intricate, involved process. Appropriate methodologies, media, and equipment must be used to collect accurate data. Furthermore, selection of appropriate numbers, types, and locations of samples is essential if the data collected are to be used for personnel exposure criteria. For these reasons, air sampling activities must be coordinated and conducted by properly qualified and experienced industrial hygiene professionals. Air monitoring activities also need to be established and monitored carefully. However, as the proper use of these instruments is not as complicated as air sampling, it is commonly acceptable to cross-train capable environmental professionals to use DRIs, with adequate technical support provided by health and safety professionals.

6.0 REFERENCES

Standard Operating Safety Guides, EPA, November 1984.
NIOSH Manual of Analytical Methods, 4th Edition.

7.0 ATTACHMENTS

None.

TABLE OF CONTENTS

SECTION **PAGE**

1.0 PURPOSE **2**

2.0 SCOPE **2**

3.0 GLOSSARY **2**

4.0 RESPONSIBILITIES **2**

5.0 PROCEDURES **3**

5.1 IN-SITU HYDRAULIC CONDUCTIVITY TESTING IN WELLS 3
5.2 IN-SITU HYDRAULIC CONDUCTIVITY TESTING IN BORINGS 4
5.3 DATA ANALYSIS 5

6.0 REFERENCES **6**

7.0 RECORDS **6**

ATTACHMENTS

A HYDRAULIC CONDUCTIVITY TESTING DATA SHEET 7

1.0 PURPOSE

This guideline is intended to describe procedures for performing in-situ hydraulic conductivity testing (slug testing) in boreholes and monitoring wells, and provide a short description of commonly used evaluation techniques for the data generated. Slug tests are used to provide data regarding the hydraulic properties of the formation tested. A variation of the slug test, called a constant-head test, is also briefly described.

2.0 SCOPE

Slug tests are short-term tests designed to provide approximate hydraulic conductivity values for the portion of a formation immediately surrounding the screened/open interval of a well or boring. These tests are much less accurate than pumping tests, as a much more localized area is involved. Therefore, a number of slug tests are typically performed and averaged to determine a representative hydraulic conductivity value for the formation tested. Performance of slug tests may be preferable to pumping tests in situations where handling of large volumes of contaminated water is a concern or when time/budget constraints preclude the more expensive and time-consuming setup and performance of a pumping test.

Constant-head tests also are used to determine hydraulic conductivity values and are similar to slug tests with regard to the quality of data obtained and time/cost considerations. A disadvantage of constant-head tests is that a significant volume of water may be added to high-permeability formations, potentially affecting short-term water quality.

3.0 GLOSSARY

Hydraulic Conductivity (K) - A quantitative measure of the ability of a porous material to transmit water, defined as the volume of water that will flow through a unit cross-sectional area of porous material per unit time under a head gradient of 1. Hydraulic conductivity is dependent upon properties of the medium and fluid. Common units of expression include centimeters per second (cm/sec), feet per day (ft/day), and gallons per day per foot^2 (gpd/ft^2).

Transmissivity (T) - A quantitative measure of the ability of an aquifer to transmit water. The product of the hydraulic conductivity times the saturated thickness.

Slug Test - A rising head or falling head test used to measure hydraulic conductivity. A slug test consists of instantaneously changing the water level within a well and measuring the rate of recovery of the water level to equilibrium conditions. Slug tests are performed by either withdrawing a slug of water (rising head test) or adding a slug of water (falling head test), then measuring recovery over time. A solid slug of known volume can be used to displace a volume of water, thereby simulating the addition or removal of water.

4.0 RESPONSIBILITIES

Project Hydrogeologist - The project hydrogeologist, in conjunction with the Project Manager, shall evaluate the type(s) and extent of hydraulic testing required for a given project during the planning process, and design the field program accordingly. The project hydrogeologist also shall ensure that field personnel have the necessary training and guidance to properly perform the tests, and shall oversee data reduction activities, including selecting the appropriate evaluation techniques and checking calculations for accuracy.

Field Geologist - The field geologist is responsible for performing the planned field tests as specified in the project planning documents, (or approved modifications thereto). The field geologist also generally assists in the data evaluation process. The field geologist shall be knowledgeable in the testing methodologies used and is responsible for obtaining the necessary support equipment required to perform the field tests. All applicable data regarding testing procedures, equipment used, well construction, and geologic/hydrogeologic conditions shall be recorded by the field geologist. The field geologist shall be familiar enough with testing procedures/requirements to be able to recommend changes in methodology, should unanticipated field conditions be encountered.

5.0 PROCEDURES

5.1 In-situ Hydraulic Conductivity Testing in Wells

Slug tests are commonly performed in completed wells. Prior to testing, the well shall be thoroughly developed and allowed to stabilize, in order to obtain accurate results. Once the water level within the well has stabilized at its static level, it shall be quickly raised or lowered and the rate of recovery measured.

One of the basic assumptions of slug testing is that the initial change in water level is instantaneous; therefore, an effort shall be made to minimize the time involved in raising or lowering the water level initially. Various methods can be used to induce instantaneous (or nearly instantaneous) changes in water level within the well. A rise in water levels can be induced by pouring water into the well. A solid slug of known volume, quickly lowered below the water level within the well, will displace an equivalent volume of water and raise the water level within the well. The slug can be left in place until the water level restabilizes at the static water level, then suddenly removed to create a drop in water level within the well. An advantage of using a solid cylinder of known volume (slug) to change the water level is that no water is removed or added to the monitoring well. This eliminates the need to dispose of contaminated water and/or add water to the system. A bailer or pump can be used to withdraw water from the well. If a pump is used, pumping shall not continue for more than several seconds so that a cone of depression is not created which would adversely impact testing results. The pump hose shall also be removed from the well during the recovery period, as data analysis techniques involve volume of recovery versus time, and leaving the hose within the well would distort the calculated testing results by altering the apparent volume of recovery. Falling head slug tests should only be performed in wells with fully submerged screens, while rising head slug tests can be performed in wells with either partially or fully submerged screens/open intervals.

Other methods that can be used to change water levels within a well include creating a vacuum or a high pressure environment within the well. The vacuum method will raise water levels within the well, while the pressure method will depress the water level in the well. These methods are particularly useful in highly permeable formations where other methods are ineffective in creating measurable changes in water levels. Both of these methods are limited to wells which have completely submerged screens.

Rate of recovery measurements shall be obtained from time zero (maximum change in water level) until water level recovery exceeds 90 percent of the initial change in water level. In low permeability formations, the test may be cut-off short of 90 percent recovery due to time constraints. Time intervals between water level readings will vary according to the rate of recovery of the well. For a moderately fast recovering well, water level readings at 0, 0.1, 0.2, 0.3, 0.4, 0.5, 0.75, 1.0, 1.25, 1.5, 2.0, 2.5, 3.0, 4.0, . . . minutes may be required. With practice, readings at down to 0.05-minute (3 seconds) time intervals can be obtained with reasonable accuracy, using a pressure transducer and hand held readout. For wells which recover very fast, a pressure transducer and data logger may be required to obtain representative data. Time intervals between measurements can be extended for slow recovering wells. A typical

schedule for measurements for a slow recovering well would be 0, 0.25, 0.5, 0.75, 1.0, 1.5, 2.0, 3.0, 4.0, 6.0, 8.0, 10.0, 15.0, 20.0, 30.0, . . . minutes from the beginning the test. Measurements shall be taken from the top of the well casing.

Water level measurements can be obtained using an electric water level indicator, popper, or pressure transducer. Steel tape coated with chalk or water sensitive paste although very accurate, is a slower method of obtaining water levels and is generally not recommended for use due to the frequency at which water level measurements need to be obtained during the performance of a slug test.

Time/recovery should be field-plotted on semilog graph paper to determine the data quality. The data set should plot along a sloped, straight line. If excessive data scatter is observed, the test should be rerun until acceptable results are obtained.

The following data shall be recorded when performing slug tests in wells or borings:

- Well/boring ID number
- Total depth of well/boring
- Screened/open interval depth and length
- Gravel pack interval depth and length
- Well stickup above ground surface
- Gravel pack radius
- Static water level
- Aquifer thickness
- Depth to confining layer
- Time/recovery data

A variation of the slug test, called a constant-head test, is a test in which water is added to the well at a measured rate sufficient to maintain the water level in the well at a constant height above the static water level. Once a stable elevated water level has been achieved, discharge (pumping) rate measurements are recorded in place of time/recovery data for approximately 10 to 20 minutes. The hydraulic conductivity is then calculated from this information. The constant-head test is generally not recommended for monitoring wells as large volumes of water may be introduced into the screened formation, potentially impacting later sampling events.

5.2 In-situ Hydraulic Conductivity Testing in Borings

Slug tests can be performed in borings while the boring is being advanced. This permits testing of formations at different depths throughout the drilling process. Boreholes to be tested shall be drilled using casing, so that discrete depths may be investigated. Various tests and testing methods are described below. The most appropriate test and testing method to be used in a situation varies and shall be selected after a careful evaluation of drilling, geologic, and general site conditions.

Rising head or falling head slug tests can be performed in saturated and unsaturated formations during drilling. There are two ways that the tests can be performed. One way entails setting the casing flush with the bottom of the boring when the desired testing depth has been reached. The hole is then cleaned out to remove loose materials, the drill bit and rods are carefully withdrawn from the boring, and a few feet of sand (of higher permeability than the surrounding formation) is added to the bottom of the boring. After the water level in the boring has stabilized (for saturated formations), the static water level is measured and recorded. The water level is then raised (falling head test) or lowered (rising head test) and the change in water level is measured at time intervals determined by the field hydrogeologist. Only falling head tests can be performed for depth intervals within the unsaturated (vadose) zone. As described for

wells, time intervals for water level measurements will vary according to the formation's hydraulic conductivity. The faster the rate of recovery expected, the shorter the time intervals between measurements shall be. The rate of change of water level will be used to calculate hydraulic conductivity. The test is to be conducted until the water level again stabilizes, or for a minimum of 20 minutes. In low permeability formations, it is not always practical to run the test until the water level stabilizes, as it may take a long time to do so. The top of the casing shall be used as the reference point for all water level measurements.

The second method for conducting a slug test during drilling consists of placing a temporary well with a short screen into the cleaned-out boring, pulling the drilling casing back to expose the screen, allowing the formation to collapse around the screen (or placing a sand/gravel pack around the screen), and performing the appropriate hydraulic conductivity test in the well, as described for the first method. Again, the test shall be conducted until the water level stabilizes or for a minimum of 20 minutes. This method allows for testing a larger section of the formation and results in more reliable hydraulic conductivity estimates.

Constant-head tests may also be performed in borings. As described for monitoring wells, once a stable elevated level has been achieved, the discharge rate into the boring is measured for a period of time, usually 10 to 20 minutes, and the hydraulic conductivity is calculated from this. This method is the most accurate method depicted in this section, and shall be given preference over others if the materials are available to perform the test and the addition of water to the boring does not adversely impact project objectives. Once the test is over, additional information can be gathered by measuring the rate of the drop in water level in the boring (for saturated formations). A limitation of the constant-head test is that foreign water is introduced into the formation which must be removed from the well area by natural or artificial means, before a representative groundwater sample can be obtained.

Detailed descriptions regarding the performance of borehole hydraulic conductivity tests and subsequent data analysis techniques are provided in Ground Water Manual (1981).

5.3 Data Analysis

There are a number of data analysis methods available to reduce and evaluate slug testing data. The determination of which method is most appropriate shall be made based on the testing conditions (including physical setup of the well/boring tested, hydrogeologic conditions, and testing methodology) and the limitations of each test analysis method. Well construction details, aquifer type (confined or unconfined), and screened/open interval (fully or partially penetrating the aquifer) shall be taken into account in selecting an analysis method. Cooper, et al. (1967), and Papadapulos, et al. (1973) have developed test interpretation procedures for fully penetrating wells in confined aquifers. Hvorslev (1951) developed a relatively simple analytical procedure for point piezometers in an infinite isotropic medium. In Cedergren (1967), Hvorslev presents a number of analytical procedures which cover a wide variety of hydrogeologic conditions, testing procedures, and well/boring/piezometer configurations. Bouwer and Rice (1976) developed an analytical technique applicable to both unconfined and confined conditions, which factors in partial/full penetration and discusses well screen gravel pack considerations. The Ground Water Manual (1981) presents a number of testing and test analysis procedures for wells and borings open above or below the water table, and for both falling head and constant-head tests. The methods described above do not represent a complete listing of test analysis methods available, but are some of the more commonly used and accepted methods. Other methods can be used, at the discretion of the project hydrogeologist and in concurrence with the Project Manager and client.

One consideration to be noted during data analysis is the determination of the screened/open interval of a tested well. If a well with a fully submerged screen is installed in a relatively low permeability formation,

and a gravel pack which is significantly more permeable is installed around the screen, the length of the gravel pack (if longer than the screened interval) should be used as the screened/open length, rather than the screen length itself. In situations where the formation permeability is judged to be comparable to the gravel pack permeability (within about an order of magnitude) this adjustment is not required.

All data analysis applications and calculations shall be reviewed by technical personnel thoroughly familiar with testing and test analysis procedures. Upon approval of the calculations and results, the calculation sheets shall be initialed and dated by the reviewer. Distribution copies shall be supplied to appropriate project personnel and the original copy stored in the project central file.

6.0 REFERENCES

Cedergren, H. R., 1967. Seepage, Drainage, and Flow Nets. John Wiley and Sons Inc., New York, pp. 78-76.

Cooper, H. H., Jr., J. D. Bredehoeft, and I. S. Papadopulos, 1967. Response of a Finite-Diameter Well to an Instantaneous Change of Water. Water Resources Research, V. 3, No. 1, pp. 263-269.

Hvorslev, M. J., 1951. Time Lag and Soil Permeability in Ground Water Observations. U.S. Army Corps of Engineers, Waterways Experiment Station, Washington, D.C., Bull. No. 36.

Papadopulos, I. S., J. D. Bredehoeft, and H. H. Cooper, 1973. On the Analysis of Slug Test Data. Water Resources Research, V. 9, No. 4, pp. 1087-1089.

Bouwer, H. and R. C. Rice, 1976. "A Slug Test for Determining Hydraulic Conductivity of Unconfined Aquifers with Completely or Partially Penetrating Wells." Water Resources Research, 12:423-28.

United States Department of the Interior, 1981. Ground Water Manual. U.S. Government Printing Office, Denver, Colorado.

7.0 RECORDS

Field data shall be recorded on the data sheet included as Attachment A (or equivalent). 1 Any notes regarding testing procedures, problems encountered, and general observations not included on the data sheet shall be noted in the bound site logbook or field notebook. The boring log and well construction diagrams for each well/boring tested shall be used as references during testing and data analysis activities. Original data sheets shall be placed in the project file, along with the logbook/notebook.

1 If an automated data recorder is used, the data may be displayed using the printer output from the unit. Such printouts should be annoted to include the relevant data form, or attached to the form shown as Attachment A.

ATTACHMENT A
EXAMPLE HYDRAULIC CONDUCTIVITY TESTING DATA SHEET

HYDRAULIC CONDUCTIVITY TESTING DATA SHEET

PROJECT NAME: ..... WELL/BORING NO.: .....

PROJECT NO.: ..... GEOLOGIST: .....

WELL DIAMETER: ..... SCREEN LENGTH/DEPTH: ..... TEST NO.: .....

STATIC WATER LEVEL (Depth/Elevation): ..... DATE: .....

TEST TYPE (Rising/Falling/Constant Head): ..... CHECKED: .....

METHOD OF INDUCING WATER LEVEL CHANGE: ..... PAGE ..... OF .....

REFERENCE PT. FOR WL MEAS. (Top of Casing, Transducer, etc.): .....

ELAPSED TIME (min. or sec.)	MEASURED WATER LEVEL (feet)	DRAWDOWN OR HEAD (ΔH) (feet)	ELAPSED TIME (min. or sec.)	MEASURED WATER LEVEL (feet)	DRAWDOWN OR HEAD (ΔH) (feet)

WELL SCHEMATIC

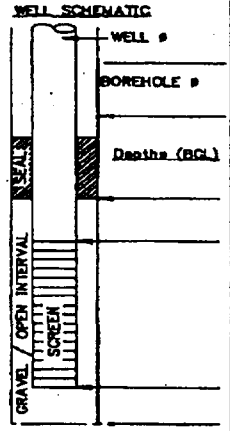

▽ Indicate SWL Depth on Drawing

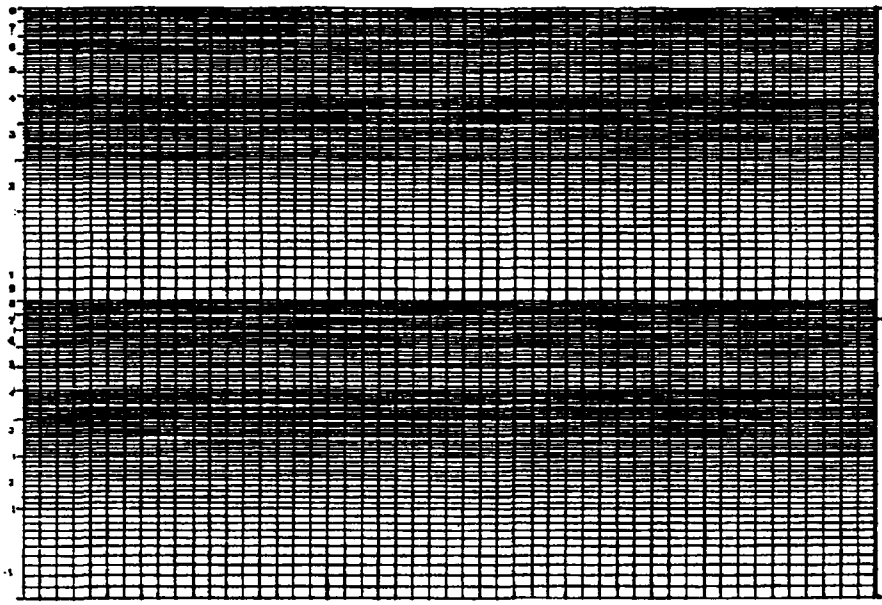

REMARKS:

.....

.....

.....

.....

.....

.....

.....

CALCS,SKETCH MAPS, ETC.:

TETRA TECH NUS, INC.	STANDARD OPERATING PROCEDURES	Number SA-5.1	Page 1 of 28
		Effective Date 03/00	Revision 1
		Applicability Tetra Tech NUS, Inc.	
		Prepared Earth Sciences Department	
Subject SPECIALIZED MEDIA SAMPLING		Approved D. Senovich	

TABLE OF CONTENTS

SECTION **PAGE**

1.0 PURPOSE **3**

2.0 SCOPE **3**

2.1 CONTAINER SAMPLING 3
2.2 TANK SAMPLING 3
2.3 LAGOON SAMPLING 3
2.4 WASTE PILE SAMPLING 3
2.5 DIOXIN SAMPLING 3

3.0 GLOSSARY **3**

4.0 RESPONSIBILITIES **4**

5.0 PROCEDURES **4**

5.1 CONTAINER SAMPLING 4
5.1.1 General Principles 4
5.1.2 Background Review 5
5.1.3 Container Selection Considerations 6
5.1.4 Container Handling and Staging 7
5.1.5 Remote Opening 9
5.1.6 Problem Containers 10
5.1.7 Container Sampling 12
5.1.8 Resealing and Siting Containers 14
5.2 TANK SAMPLING 14
5.2.1 Access for Sampling 14
5.2.2 Tank Sampling 14
5.2.3 Sample Packaging and Shipping 15
5.3 LAGOON SAMPLING 15
5.3.1 Methods of Obtaining Access to Sampling Locations 15
5.3.2 Methods of Sample Collection 16
5.3.3 Sample Packaging and Shipping 17
5.4 WASTE PILE SAMPLING 17
5.4.1 Methods of Sample Collection 17
5.4.2 Sample Packaging and Shipping 17
5.5 DIOXIN SAMPLING 17
5.5.1 Sample Collection and Handling 17
5.5.2 Sample Documentation 18
5.5.3 Sample Packaging and Shipping 18
5.5.4 Decontamination 18

6.0 REFERENCES **19**

TABLE OF CONTENTS (Continued)

ATTACHMENTS

A TECHNIQUES FOR OPENING CONTAINERS 20
B PROCEDURES FOR PACKAGING AND SHIPPING HIGH-HAZARD SAMPLES 21
C METHODS OF SAMPLING STRATIFIED CONTENTS OF TANKS 22
D COLLECTION OF LIQUID CONTAINERIZED WASTES USING GLASS TUBES 28

FIGURES

NUMBER **PAGE**

C-1 BACON BOMB SAMPLER 25
C-2 WEIGHTED BOTTLE SAMPLER 26
C-3 MODIFIED KEMMERER SAMPLER 27

1.0 PURPOSE

The purpose of this procedure is to provide general reference information for use in planning for and implementing sampling programs involving one or a combination of the following specialized media: sampling containers of unknown contents, tank sampling, lagoon sampling, waste pile sampling, or dioxin sampling.

2.0 SCOPE

2.1 Container Sampling

This procedure is applicable to opening and sampling of containers (e.g., 55-gallon drums, cylinders, packaged laboratory waste, etc.) when the characteristics and hazards associated with the contents have not been determined.

2.2 Tank Sampling

This procedure covers tank inspection and sampling techniques for use in assessing the condition and contents of tanks. This guideline does not address actual entry for internal inspection or sampling which requires strict Health and Safety protocols during this potentially hazardous activity.

2.3 Lagoon Sampling

This procedure describes requirements and methods for collecting samples of liquid, sludges, sediments and bottom soils from lagoons containing hazardous materials. Factors which affect access to appropriate sampling locations and methods of obtaining samples at these locations are discussed herein. In this guideline, however, strong emphasis is given to the stringent health and safety requirements related to lagoon sampling. Since many lagoons contain highly concentrated wastes and present direct physical hazards via inhalation or contact, extreme care must be taken with all lagoon sampling programs.

2.4 Waste Pile Sampling

This procedure describes methods for collecting solid waste samples from homogeneous and heterogeneous waste piles.

2.5 Dioxin Sampling

The areas addressed in this procedure include sample collection and handling, documentation, packaging and shipping, and decontamination for aqueous, soil/sediment and wipe samples to be analyzed for TCDD. As personnel protection and sampling are dependent upon site conditions (the extent of contamination, the medium to be sampled, etc.) they are better discussed in the Health and Safety Plan and will not be covered here. It should be noted that the techniques presented in this guideline are subject to revision and modification. The user will follow the most up-to-date revisions or site-specific modifications of this guideline.

3.0 GLOSSARY

Air Reactive Wastes - Some chemicals, such as white phosphorus or barium oxide, react with oxygen in the air, while others, such as sodium, cesium or various metal hydrides, react with the moisture or water vapor in the air. Many of these compounds are explosive when they come in contact with air or water.

Caisson - A large diameter circular tube or pipe from which lagoon or impoundment liquid can be removed to allow collection of a "dry" sample of bottom solids.

Container - Any drum, bottle, can, bag, etc., with a capacity of 120 gallons (450 liters) or less.

Core Sample - A sediment sample from taken in such a way as to preserve the horizontal and vertical integrity of the sample for subsequent physical and/or chemical characterization of specific vertical intervals.

Glass Thief - A glass tube, usually 4 feet long and 3/4 inches in diameter, used for taking samples from drums. The tube is usually broken and disposed of in the drum following sampling.

Lagoon - Any onsite impoundment, depression, excavation, or diked area containing liquids where waste materials have been deposited.

TCDD - Abbreviation for the compound 2,3,7,8-tetrachloro-dibenzo-p-diozin (also called dioxin). TCDD will be used throughout this guideline.

4.0 RESPONSIBILITIES

Project Manager (PM) - responsible to assure that the need for specialized media sampling is justified and that the sampling techniques chosen are adequate to obtain a representative sample and prevent spills and/or atmospheric releases.

Field Operations Leader (FOL) - responsible for implementing the sampling plan and for overseeing the sampling effort in the field.

Health and Safety Officer (HSO) - responsible for developing the safety-related procedures for specialized media sampling and for assuring their correct implementation in the field.

5.0 PROCEDURES

5.1 Container Sampling

5.1.1 General Principles

In general, a container opening and sampling program will have one of the following objectives:

- To determine the presence of waste and/or hazardous materials on the site. Such a program involves a very limited number of containers, perhaps as few as one.
- To characterize the range of materials present at a site. Containers would be chosen for sampling by means of systematic selection criteria.
- To characterize container contents for such purposes as segregation or bulking for storage and/or disposal. This program may involve opening and sampling every container on a site, and performing onsite compatibility testing.

The guidance presented is based on field experience in working with containers on hazardous substance sites. It will be evident that in many cases pre-established procedures cannot be given, and professional judgment is required because of the number of variables involved. For example, one can never be certain of any assessment of the potential contents of a container, or the accuracy of labels. Only educated

guesses can be made by a thorough review of all available background data, such as potential sources of the wastes.

Three basic risks are involved in moving and opening closed containers: (1) exposure of personnel to toxic materials, (2) fire, and (3) explosion. The first risk can be reasonably eliminated through the use of proper skin and respiratory protection equipment. The use of Level A protection acceptably reduces the risk of a worker being injured by toxic vapors, mists, or splashes. In the same way, standard fire prevention procedures can be used to reduce the fire hazard through the use of detector instruments and proper equipment. These include the use of non-sparking tools and intrinsically safe radios, pumps, and other equipment, as well as the staging of fire fighting equipment and the elimination of other possible ignition sources.

The explosive risk, however, is not as easily handled, and thus is the primary consideration in any container-opening operation. Even if no solid evidence of the presence of explosives is found during the preliminary data collection, one can never be certain that explosive material have not been disposed of at the site. In order to provide the same reasonable level of protection against this risk as against toxic exposure and fire, a very cautious approach, such as the one recommended in this procedure, should be used.

5.1.2 Background Review

This section details the elements of a site background review necessary to prepare a Sampling Plan for drum opening. The decision of whether or not to conduct the operations depends on the assessment of the site history. Therefore, it is important that the following tasks are completed thoroughly.

5.1.2.1 Preliminary Assessment and Site Inspection

Any existing data should be consulted in planning for a container-opening operation. Of special importance are items that can be used to characterize the types of hazardous materials present at the site (e.g., generator records, manifests, inventories, personal interviews, monitoring data). The review of all such data should search for the possible presence of shock-sensitive explosives and/or reactive chemicals.

5.1.2.2 Explosive Product Survey

If the site is a waste disposal or storage operations, a survey of commercial producers or users of explosives within the area served by the facility must be conducted. The determination of the area covered in this survey is a judgment that should be based on locations of known waste generators that used the facility and geographic locations of the site. Agencies that could assist in identifying explosive producers or users are local and state police units, state transportation departments, the U.S. Department of Transportation (DOT), and EPA or state hazardous waste permit offices. Standard Industrial Classification (SIC) codes can be used to locate producers of explosives from lists of manufacturers available from state commerce agencies, local chamber of commerce, planning agencies, etc.

5.1.2.3 Site Visit

A site visit is required prior to planning a drum opening operation. Information on the following should be gathered during the site visit:

- Site boundaries - fences, roads, natural boundaries, etc.
- Access points and travel routes on the site.

- Topographic features
- Adjacent land uses - residential, agricultural, public use areas, commercial establishments, schools, natural areas, etc.
- Power lines, railroad, and public roads close to the site.
- Container storage areas - provide observational details; describe if drums are jumbled, stacked, piled, arranged in rows, etc. General condition of drums indicates if containers can be grouped according to contents, or any other classification method. Note damaged drums (e.g., bulging, dented, punctured, rusty, etc.) and determine if overpack drums are necessary.
- Buildings and other site structures, as well as any other disposal areas such as lagoons, surface piles, etc.
- Location of water sources.
- Location of potential staging areas.

During the site visit, local officials should be contacted to arrange for fire protection and police support during the operation. Interviews should also be conducted with site workers, local officials, and any other people familiar with the site's history.

The central purpose of the background review is to evaluate the risk presented to personnel engaged in drum-opening operations. Assessment of drum contents is most important because it identifies specific risks. However, other site features also affect the hazard potential. Leaking and corroded drums, crowded and poorly organized conditions, and drums of unknown and apparently diverse origins are conditions that require careful planning.

There are no accurate quantitative methods available to evaluate the total risk. Assessment of the danger is subjective and should be done by personnel experienced in field operations at hazardous sites. Good professional judgment is required, and project management must feel that adequate information is available to support a decision to conduct the drum-opening operations. Any positive indication of shock-sensitive materials that might react or explode requires special consideration. Unlabelled drums and containers shall be considered to contain hazardous substances and handled accordingly until the contents are positively identified and the drum is labeled.

5.1.3 Container Selection Considerations

The containers selected for opening and sampling will depend on the purpose of the operations and on considerations of safety--that is, a container that may detonate is to be avoided. Even though drums are found at disposal sites where the contents are unknown, it is worthwhile to consider drum markings and types as well as drum groupings.

When considering sampling, the first choice of drums would be those marked with known hazardous materials (trade name, chemical name, empirical formula), or hazard labeling. Next would be those isolated by themselves, of uncommon shape or banding, or material contained in an exotic metal container (e.g., aluminum, nickel, monel, stainless steel). Then consideration should be given to the unmarked drum piles or stacks.

When sampling for site characterization purposes, a concerted effort should be made to distinguish drum lots and to get an accurate drum count among the lots.

On most sites, there is some organization or pattern to the way the material was placed on the site. The pattern is occasionally as detailed as finding the flammable solvents in one area, acids in another, cyanide in another, recoverable metals in a fourth, and so on. Some disposal facilities stencil control numbers on drums to indicate specific lots. Often, the only indication that a group of drums is related will be their color, size, or type.

Approach isolated groups of containers with care, but do try to determine why they were segregated. Occasionally a group of drums is found marked 'DFW' (roughly translates as "Don't Fool With") because of their extreme hazard or because the people handling them have had an accident or other unusual experience with them.

An attempt should be made to avoid drums that are structurally damaged or if their movement or sampling would endanger a team member. Samples of drums in stacks or piles should not be taken if at all possible.

Before sampling drums of unknown content, an external radioactivity scan must be conducted with the results recorded in the field notebook. On a site where many different types of containers are present, they should be sampled in the following order, based on what they can be expected to contain and in increasing order of hazard:

- Paper, plastic, cloth, and burlap bags.
- Glass carboys and jugs (except chemical reagent or laboratory-packed bottles).
- Fiberboard drums.
- Plastic and polyethylene carboys and containers.
- Plastic-lined steel drums.
- Steel drums.
- Exotic metal drums.
- Odd containers (distended, isolated, marked "DFW," etc.).

Attachment A contains information on the types, sizes, DOT designation, openings, and recommended opening techniques for the various kinds of containers. Any drum without a DOT designation should be avoided, as it may have military origins. The DOT designation, which is usually found on the bottom of a drum, can be useful in determining the material of the drum.

5.1.4 Container Handling and Staging

NOTE: A Drum/Container Management Plan will be developed for each site in which drums/containers will be handled, sampled, or staged. The Plan will be prepared consistent with the requirements of Paragraph (j) of 29 CFR 1910.120 (OSHA's Hazardous Waste and Emergency Response Standard, or HAZWOPER). This Plan will discuss site-specific issues related to drum/container management, and will be included as part of the Health and Safety Plan. The following text discusses, in a general fashion, the minimum practices and procedures to be followed. Where provided, the guidance of the site-specific Drum/Container Management Plan shall be followed to supplement this SOP. In the case of overlapping requirements, the more stringent requirement shall take precedence.

When practical, drums and containers shall be inspected and their integrity shall be assured prior to being moved. Drums or containers that cannot be inspected before being moved because of storage conditions shall be moved to an accessible location and inspected prior to further handling.

Personnel involved in handling and transporting containerized waste shall work in teams containing no fewer than two people. Visual contact shall be maintained between members of the working team at all

times. All team members shall be able to communicate between themselves and with the Site Health and Safety Officer by a safe two-way radio at all times on the work site. In addition, employees shall be warned of the potential hazards associated with the contents of the drums or containers.

Prior to physically handling a drum or other container, the following preliminary classifications checklist must be reviewed and each response noted in a field notebook:

- Is the drum radioactive?
- Does the drum exhibit leakage or deterioration, i.e., is it unsound?
- Does the drum exhibit apparent internal pressure?
- Is the drum empty?
- Does the drum contain markings which would indicate that the contents are potentially explosive?

The results of the preliminary classification checklist dictate which specific procedures shall be followed in handling, opening, and sampling the drum.

The handling, movement, and transport of drums and other containers should be by use of mechanical equipment only; equipment may consist of a grappler equipped backhoe, front-end loader, or drum dollie. Drum transportation may be with front-end loaders or fork lifts with modified carrying platforms. When necessary, portions of equipment that contact drums or canisters should be constructed of non-ferrous metals or contact portions should be coated or lined to preclude spark generation. Handling and transport equipment must be equipped with full frontal and side splash and explosion shields. Class ABC fire extinguishers shall be fitted to the body of each piece of equipment.

When possible, drums or other containers to be sampled should be opened and sampled in place to minimize handling. However, when drums are stacked or are close together, they may have to be moved to prevent sympathetic detonation of, or chemical reaction with, other drums around the one being opened. The main criterion is distance to other drums--a reasonable distance should be maintained to keep the drum to be opened segregated from others.

Drums or containers exhibiting the following characteristics require special treatment in handling and sampling:

- Leaking or deteriorated drums
- Bulging drums
- Drums containing explosive or shock-sensitive waste
- Drums containing radioactive waste
- Lab packs
- Gas cylinders

When drums are moved, they should be taken to a staging and sampling area that is diked or bermed to control spillage. Again, this area should be far enough away from other drums on the site to prevent a chain reaction. Only one container at a time should be placed in the staging area and opened. One crew can be moving and setting up the remote-opening equipment on the next container while another crew is sampling, labeling, and resealing the first container.

Containers that are inside warehouses, basements, or other buildings must be moved outside before they can be opened. If this is not possible, the Project Manager must be contacted for special assistance in developing the opening plan. Adequate ventilation is critical for container-opening operations.

5.1.5 Remote Opening

Because of the possibility of encountering a drum containing a shock-sensitive material, any drum to be moved and/or sampled should be remotely shaken. One way of doing this is to carefully tie a rope around the drum and shake it from behind a barrier at a safe distance.

The required method of opening drums is by remote means (except as noted in Attachment A). Three types of remote-opening equipment are available: the bung spinner, the remote-controlled drill, and the drum piercer.

The bung spinner consists of:

- Air impact wrench with non-sparking adapter.
- Drum-mounting bracket.
- Two-stage regulator.
- Compressed-air cylinder with 100 feet of air hose and control valve.

The impact wrench is mounted over the bung on top of the drum by means of the steel-mounting bracket. The air tank, regulator, and control valve can be placed up to 100 feet away from the drum in a well-protected location.

A remote-controlled, air-operated, self-feeding, and self-retracting drill can also be used. This tool consists of:

- Self-feeding and self-retracting drill.
- Drum-mounting bracket.
- 100 feet of air and control hoses.
- Two-stage high-pressure regulator.
- Compressed air cylinder.
- Filter/regulator/lubricator unit.

As with the bung spinner, the air tank, regulator, and control valves can be placed up to 100 feet away from the drum in a well-protected location. There are two controls on this piece of equipment--a start valve and an emergency retract valve.

The drum piercer consists of:

- Hydraulic ram with hand pump.
- 100 feet of hydraulic hose.
- Drum-mounting bracket (top or side).
- Piercing nail.

This unit uses the same bracket as the drum drill. The hydraulic ram slowly forces the steel piercer through the drum surface as the hand pump is operated. When the 1/2-inch-diameter hole is complete, opening a relief valve on the pump allows the spring to retract the piercer from the hole.

When any of these pieces of equipment are used, the control lines are to be extended to their maximum, and drum-opening personnel are to operate the controls from behind sandbags, a concrete or brick structure, or other solid barriers. Remember, the opening surfaces of the drill or bung spinner should be decontaminated after each use.

The following guidelines are offered for other types of containers:

- Ring-closed, open-top drums - Loosen the ring and then remove it remotely by means of a rope. If it is necessary to cut the ring, do so near the bolt or clamp/lever so that there will be a place to attach the rope.

- Glass carboys or jugs with lapped/ground-glass stopper or plastic cap - Slowly release any retaining wire and vent any pressure. Remove the stopper or cap by hand only.

- Fiberpacks or corrugated cardboard containers - Release the locking ring and remove the ring and lid by hand.

- Plastic or polyethylene carboys and plastic-lined drums (when necessary) - Use a non-sparking aluminum, brass, or beryllium bung wrench of the proper size. Do not use a bung wrench on any distended drums of this type; remote methods will be applied.

- Plastic Kraft paper, burlap, or cloth bags - Use a trowel or sampling trier. The bags should be resealed or placed in an overpack.

5.1.6 Problem Containers

Special handling techniques are required for containers which may expose personnel to particularly hazardous conditions. These techniques are described in general below, although site-specific conditions may require the development of specialized methods in the Sampling Plan.

5.1.6.1 Leaking or Deteriorated Drums

- The contents of drums that exhibit leakage or apparent deterioration must immediately be transferred to a repack drum. Equipment, including transfer pumps used in the repack operation, must be of explosion-proof construction or otherwise be classified for the material being transferred.

- Leaking drums containing sludges or semi-solids, drums that are structurally sound but which are open and contain liquid or solid waste, and drums which are deteriorated but can be moved without rupture, must be immediately placed in overpack containers.

5.1.6.2 Bulging Drums

- Drums which potentially may be under internal pressure, as evidenced by bulging, must be sampled in place. Extreme care shall be exercised when working with and adjacent to potentially pressurized drums.

- Should movement of a pressurized drum be unavoidable, handle only with a grappler unit constructed for explosive containment. The bulging drum should be moved only as far as necessary to allow seating on firm ground or it should be carefully overpacked.

- Openings into pressurized drums shall be plugged and the bung holes fitted with pressure venting caps set at 5 psi release.

5.1.6.3 Drums Containing Explosive or Shock Sensitive Waste

- If drums containing wastes that have been identified by sampling, or are suspected by visual examination to be explosive in nature are found, the Project Manager and HSO must be notified immediately, before the drums are handled in any way.

- If the Project Manager and HSO approve handling of these drums, they shall be handled with extreme caution. Initial handling shall be by a grappler unit constructed for explosive containment. Drums shall be palletized prior to transport to a high hazard interim storage and disposal area.

- If at any time during site activities, an explosive, pursuant to provisions of Title 18, U.S. Code, Chapter 40 (Importation, Manufacture, Distribution, and Storage of Explosive Materials, 1975 Explosives List) is identified, it should be secured and the appropriate personnel and/or agencies notified.

- Identification of an explosive substance during the course of site activities is usually based on the experience of the onsite personnel. Potentially explosive materials usually may be identified by their physical characteristics--texture, color, density, etc., as well as the way they are packaged or labeled. Most explosives are solids. In some cases they are packaged in water-tight containers to exclude water, while in other cases they are packaged wet to preclude explosion.

- Prior to handling or transporting drums containing explosive wastes, personnel working in the area shall be removed to a safe distance (as determined by the HSO). Continuous contact with the command post shall be maintained until handling or transporting operations are complete. An audible siren signal system, similar to that employed in conventional blasting operations, shall be used to signify the commencement and completion of explosive waste handling or transporting activities.

5.1.6.4 Drums Containing Radioactive Waste

- Drums containing radioactive wastes shall not be handled until radiation levels have been determined by an initial field survey which is recorded in a field notebook. The survey shall include background levels, direct gamma readings and laboratory analysis of drum surface wipe samples.

- Depending on the level of radiation encountered, handling and transport may require special shielding devices to protect personnel. Following handling and transport, equipment used shall be surveyed by the HSO and decontaminated to background levels prior to recommencing work. Surveys shall also be made of the ground surface in the vicinity of original drum storage to identify potential soil contamination by spilled or leaked radioactive waste. Prior to recommencing work in the area, radioactive soil areas shall be isolated to prevent tracking of radioactive contaminants about the site, and workers who entered the area should have their gloves and boots surveyed for radiation.

5.1.6.5 Packaged Laboratory Wastes (Lab Packs)

- If drums known or suspected of containing discarded laboratory chemicals, reagents or other potentially dangerous materials in small volume, or individual containers are found, the Project Manager is to be notified immediately, before the drums or containers are moved or opened.

- If the Project Manager and HSO approve the handling of these containers, they shall be handled with extreme caution. Until otherwise categorized, they shall be considered explosive or shock sensitive wastes. Initial handling shall be by a grappler unit constructed for explosive containment. Drums shall be palletized and overpacked, if required, prior to transport to the Lab pack staging area for sorting, identification, repacking and/or stabilization.

- Prior to handling or transporting Lab Packs from the existing drum area, personnel working in the immediate area shall be removed to a safe distance. Continuous contact with the command post shall be maintained until handling or transporting operations are complete. An audible siren signal system, similar to that employed in conventional blasting operations will be used to signify the commencement and cessation of Lab Pack handling or transporting activities.

5.1.6.6 Air Reactive Wastes

- If the presence of an air reactive substance is verified or suspected, the material should be immediately segregated and transported to a separate high-hazard interim storage and/or disposal area.
- Air reactive wastes may be discovered during opening or sampling operations. Air reactive substances normally require special packaging. They may be stored under water or some other liquid to minimize air contact. They may also be found in sealed ampoules, corrugated drums, stainless steel canisters, or specially lined drums.

5.1.6.7 Gas Cylinders

- Gas cylinders, when encountered, should be stored and disposed of on a special case basis depending on the integrity of the cylinders and type of substance they are expected to contain.

5.1.7 Container Sampling

5.1.7.1 Equipment

- Personal protection equipment.
- One or two 500 mL, wide-mouth amber glass bottle with Teflon cap liner unless the medium reacts with silica.
- Uniquely numbered sample identification labels filled out and affixed to sample containers before sampling commences.
- 4-foot x 3/4-inch ID glass sampling thief/glass tube for aqueous media.
- Plastic or teflon coated trowel for solid media (trowel must be HSO approved).
- Remotely operated opening device.
- One gallon covered cans half-filled with absorbent material (for offsite shipment only).

5.1.7.2 Sampling Procedures

NOTE: Employees not actually involved in opening drums or containers shall be kept a safe distance from the drums or containers being opened.

All drums and mechanical equipment should be grounded prior to the commencement of sampling. If the bung or container lid can be removed, sample contained liquids using a glass thief, which shall then be broken and discarded within the barrel. A barrel that has a badly rusted bung, or that cannot be sampled as above, shall be safely entered with a hydraulic penetrating device operated remotely. All openings shall be plugged except during sampling operation.

The steps to be followed in sampling are as follows:

- Record any markings, special drum conditions, and type of opening in the field notebook, on the sample log sheet, and, later, on the Chain-of-Custody form and locate the general area on a sketch of the site.

- Stencil an identifying number on the drums and record in logbook. Consult the sampling plan for identifications.
- Make certain that the drum/container is set on a firm base, preferably in a fully upright position. Never stand upon or work from drums or containers.
- Open the drum/container as described in Section 5.1.5 and Attachment A.
- Insert glass tubing almost to the bottom of the drum or until a solid layer is encountered. A little over 1 foot of the 4-foot glass sampling thief/glass tube should extend above the drum.
- Allow the waste in the drum to reach its natural level in the glass tube. Then cap the top of the sampling tube with a tapered stopper, ensuring liquid does not come into contact with stopper.
- Carefully remove the capped tube from the drum and insert the uncapped end in the sample container. Do not spill liquid on the outside of the sample container. Release the stopper and allow the glass thief to drain completely into the sample container.
- Deliver 100 to 250 mL of the sample (the sampling plan will specify the amount) to a clean, wide-mouth, 500-mL (1-pint) glass sample jar. If the sample is not free flowing and is taken through a bung opening, repeated sampling may be necessary.
- Place the used sampling tube, along with paper towels or waste rags used to wipe up any spills, into an empty metal barrel for subsequent disposal. If glass tubing has been used, it may be broken and left inside the drum being sampled.
- Cap the sample container tightly and place pre-labeled sample container in a carrier.
- Replace the bung or lids or place plastic over the drum/container.
- Measure the sample for radioactivity and record results in a field notebook. If the meter readings exceed 10 mR/hr, notify the HSO and FOL immediately; they in turn will notify the Project Manager.
- Fill out a Chain-of-Custody Record and carefully pack samples. The finished package will be custody-sealed for shipment to the laboratory. The preferred procedure includes the use of a custody seal across filament tape that is wrapped around the package at least three times. The custody seal (paper, plastic, or metal) is then folded over and stuck to itself so that the only access to the samples is by cutting the filament tape or breaking the seal to unwrap the tape. The seal is signed before the package is shipped.
- Complete the appropriate traffic report. Drum samples are always considered to be high-hazard samples.

5.1.7.3 <u>Sample Preservation and Packing Procedures for Drummed Waste Samples</u>

- No preservatives shall be used.
- Unless the contents of the drum can be positively identified, the sample(s) collected must be shipped as high-hazard samples (see SA-6.2; Sample Handling and Attachment B).
- Arrange for the appropriate transportation mode consistent with the type of hazardous waste involved.

5.1.8 Resealing and Siting Containers

All containers opened for sampling need to be resealed to prevent the escape of vapors and possible reactions from rainwater, air and so on. The resealing methods will depend on the opening methods used and include the following.

- Replacing the bung, screw cap, etc.
- Replacing the lid and retaining ring.
- Placing the drum in an overpack (larger drum) when it cannot be resealed by any other method.
- If a hole is drilled, use of a special rubber or plastic plug. A drum bonnet should be used to ensure that rainwater does not seep around the plug.

It is important to note that these resealing methods are for the purpose of preventing leakage from the container while it is in storage on the site. If the container is to be moved off the site, DOT regulations regarding transportation of drums must be complied with. These will generally require more rigorous sealing procedures.

Once the drum is sampled and resealed, it should be properly identified and left where it cannot react with other containers on the site. For a small number of drums, the storage areas may be the staging and opening area. In any event, the sampled drums should be placed in an area away from other groups of containers on the site. The reason is that slowly progressing chemical reactions can start when a container is opened and the contents exposed to air or the disturbance caused by handling the drum. Such a reaction could take hours or even days to occur.

5.2 Tank Sampling

5.2.1 Access for Sampling

If possible, tanks will be opened and sampled from the top. The physical size, shape, construction material and location of access will determine the best methods of opening and sampling. In some cases, (for example, if the tank is being sampled from a valve at the bottom of the tank) it may be necessary to have spill response personnel on site in case of an accidental release.

When liquids are contained in sealed vessels, gas vapor pressures build up, sludges settle out, and density layering develops. The potential for explosive reactions or the release of noxious gases when containers are opened require considerable safeguards. The vessels should be opened with extreme caution. Preliminary sampling of any headspace gases is typically warranted. As a minimum, a preliminary check with an explosimeter or an organic vapor analyzer will determine levels of personnel protection and may be of aid in selecting a sampling method.

5.2.2 Tank Sampling

At least two persons must always perform tank sampling: one should collect the actual samples and the other should stand back, usually at the head of the access stairway and observe, ready to assist or call for help. If the walls or roof of the tank are corroded, the samplers should not attempt to climb up the outside of a tank, but instead an aerial lift should be used to gain access to the sampling point.

The sampling of tanks is similar to the sampling of drums. The techniques for sampling are the same, except sampling equipment may need to be longer to give a representative sample of deep tanks. Steps to be followed in tanks sampling include the following:

- Record the tank's condition, markings, openings or valve types, and approximate size in gallons in the site logbook and on the sample log sheet. Note the tank location on the site sketch.

- Attach an identification number to the tank using a stencil or weatherproof tag. Number succeeding tanks consecutively. Record the numbers in the site logbook.

- Determine whether the tank contents are stratified by inserting a long plastic or glass tube sampler, withdrawing it, and examining the tube contents. Samples of stratified contents can be taken using a bomb sampler, weighted bottle, or a Kemmerer sampler. For a description of these methods, see Attachment C of this Guideline. If a composite sample is desired, take one sample each for the upper, middle, and lower sections of the tank or for each identified layer, and composite them in one container.

  NOTE: If a reaction is observed when the glass tube is inserted (violent agitation, fumes, light, etc.) the investigators should leave the area immediately. If the glass tube becomes cloudy or smokey after insertion into the tank, the presence of hydrofluoric acid is indicated and a comparable length of rigid plastic tubing should be used.

- If contents of the tank are homogenous, a sample may be taken using glass tubes. See Attachment D for details of this procedure.

- After collecting the sample in the appropriate pre-labeled container(s), tighten the lid, and fill out the appropriate sample log sheets and Chain-of-Custody Record.

5.2.3 Sample Packaging and Shipping

Many samples collected from storage tanks will be shipped as high-hazard samples (see SA-6.2; Sample Handling and Attachment B).

5.3 Lagoon Sampling

5.3.1 Methods of Obtaining Access to Sampling Locations

Because the collected samples must be representative of conditions throughout a lagoon, sampling directly from the shore is usually only appropriate for sampling of very small lagoons or impoundments (less than 10,000 square feet). Samples can also be collected from a platform suspended from shore-based machinery such as a "cherry picker." These platforms may extend to a maximum of 20-25 feet from the shore, depending on the available support on the lagoon bank. Platforms can be outfitted with suitable protective guardrails to provide a relatively safe working environment. However, space is limited and it is often difficult for more than two people to work effectively.

In situations where samples must be collected from the interior sections of a lagoon, a flotation device is often required. Safety is the overriding factor in such an operation and special care must be exercised to insure that a stable work platform is provided.

In many cases, commercially available vessels are not appropriate for lagoon sampling and must be modified to increase stability, facilitate sampling operations over the side or through the hull and allow enough room for personnel, sampling equipment and personal protection equipment. Provisions must also be made to decontaminate or dispose of the vessel after use. Custom designed and built vessels and equipment may also be appropriate, depending on the situation.

A flat-bottomed boat may be used for lagoon sampling but this may still represent a dangerously unstable condition. To overcome instability, a sampling platform can be constructed from two flat-bottomed boats outfitted with a frame, guardrails, stabilizing legs at each corner and an opening in the center.

This opening can be used for caisson placement, hand coring, or liquid sample collection. Other designs and configurations are also possible.

Independent of final design, platforms may be moved over the lagoon by means of ropes, oars or attached outboard motors. The use of ropes is favored for all but the largest lagoons because the ropes will also keep the platform in position. Where movement of the sampling platform is hindered by viscous surface deposits or other impediments, winches or motor vehicles may be required to move the platform.

5.3.2 Methods of Sample Collection

When collecting liquid samples from the shore, the sampling container can be filled directly (as for the collection of surface water samples) or a sampling bucket can be thrown into the lagoon interior to collect samples before transfer to the sampling container. In the latter case, care must be taken to insure that the sample bucket construction materials are inert to the lagoon materials and will not cause potential interferences (contamination) with the analyses of interest. Also, the bucket should not be allowed to drag along the bottom and thus contaminate the liquid sample with sediment.

Samples of sludges and sediments can be collected directly from the shore in a manner similar to the collection of liquid samples. However, substantial mixing with overlying liquid is likely. For compacted or cemented bottom materials, samples may be collected directly from the shore using a trowel or a drive sampler (e.g., split barrel).

In collecting liquid samples from suspended or floating platforms, various surface water and tank sampling devices (such as the Bacon Bomb Sampler or a weighted bottled sampler) may be used. Direct methods used for shore sampling may also be applied. Use of these specialized samplers is essential if samples from discrete depths are required. Except for very shallow lagoons, sampling from the surface is not recommended because of the likelihood that non-representative samples will be obtained.

Sediment coring samples can be obtained from floating or suspended platforms. Sediment coring may be required to examine the extent of contaminant migration below the lagoon floor. Special considerations in this instance include breaching of the lagoon liner, degree of consolidation of lagoon bottom sediments or sludges, depth of the lagoon, and the desired depth of the sample. Generally, sediment core samples can be obtained using an open ended pipe (hand corer) which is driven by hand into the sediments. A sledge hammer is usually adequate for driving the sampler. The sampler should be equipped with a suitable check-valve assembly so that an interior vacuum can be maintained to hold the material in the sampler. The core materials can then be extracted and examined and sampled, or the pipe capped with the sample still within and the entire assembly sent to the lab for analysis. This method will probably not work well with highly liquid samples. In this case, a vacuum pump, weighted bottle sampler, or modified Kemmerer/Van Dorn Sampler may suffice.

In cases where collection of subsurface soil or sediment samples is hindered by the presence of overlying liquid, the liquid will either have to be removed or impounded away from the sampling location prior to sample collection with a hand auger or drive sampler. Application of the former method requires adequate pumping capacity and temporary liquid storage facilities which are often not available or expensive.

If samples are taken from a bottom layer which has served as a seal for the lagoon contents, resealing with a bentonite or equivalent "plug" will be required. This can only be done when dry samples are taken. There is no way to adequately seal the bottom after sample removal by the hand coring method unless the overlying water is removed.

As an alternative to evacuating the lagoon, the liquid may be impounded away from the bottom sampling location by means of implanting a caisson in the lagoon bottom. This caisson may consist of a large diameter pipe which is forced into the lagoon bottom so that liquid can be removed, seepage subsequently controlled and a "dry" lagoon bottom sample obtained via a hand auger or driven sampler. In some cases, a double caisson arrangement may be needed with seepage constantly removed from the outer casing. Caissons are normally driven in place by hand although heavy machinery (backhoes, cherry pickers) may be used if installation is close to shore.

Caisson installation can be a difficult and time-consuming task. It should only be used when alternate methods for collection of bottom sludges or soil samples are not available and when there is a danger of breaching the liner.

5.3.3 Sample Packaging and Shipping

Many samples collected from lagoons will be shipped as high-hazard samples (see SA-6.1; Non-Radiological Sample Handling and Attachment B).

5.4 Waste Pile Sampling

5.4.1 Methods of Sample Collection

The use of stainless steel scoops or trowels to obtain small discrete samples of homogeneous waste piles is usually sufficient for most conditions. Layered (nonhomogeneous) piles require the use of tube/core samplers to obtain cross-sectional samples.

- Collect small equal portions of the waste from several points around the pile, penetrating it as far as practical. Use numbered stakes, if possible, to mark the sampling locations and locate sampling points on the site sketch.
- Place the waste sample in a pre-labeled sample container. Record all the required information in the field logbook and on the sample log sheet and other required forms.

5.4.2 Sample Packaging and Shipping

Many samples collected from waste piles will be shipped as high-hazard samples (see SA-6.1; Sample Handling and Attachment B).

5.5 Dioxin Sampling

5.5.1 Sample Collection and Handling

5.5.1.1 Aqueous Samples

Samples collected for TCDD analysis may be taken using the appropriate methods for collecting other aqueous samples. It is important to use amber glass and to protect samples from light, as the concentration of TCDD is affected by exposure to light.

5.5.1.2 Soil/Sediment Samples

Soil and sediment samples are collected using conventional sampling techniques and equipment. In areas where a highly compacted material such as asphalt covers the soil to be sampled, the overburden is

to be broken and removed, using picks and shovels, until a 1-foot-square area is cleared. All holes are backfilled after sample collection with clean appropriate material(s).

Before the sample is placed in its container, it is homogenized using a stainless steel spoon and mixing bowl. Prior to filling, each sample jar is placed inside a clean plastic baggie held secure with a rubber band. Stainless steel scoops or spoons are used to transfer the homogenized sample to the jar. After filling and capping, the baggie and rubber band are removed, if visual contamination is present, 1,1,1-trichloroethane, allowed to dry, and then placed in a clean baggie. Samples are stored away from light.

5.5.1.3 Wipe Samples

Wipe samples are often collected to determine the extent of surface contamination. The following procedures will be implemented when collecting wipe samples for TCDD analysis (OSHA, 1984):

- Using clean gloves, pre-load vials with appropriate filters. The type of filter will depend on the type of analysis to be performed. Glass fiber filters are to be used with HPLC or GC analysis; paper filters are used with any other analysis.
- Prepare a rough drawing of each of the locations to be sampled.
- Withdraw filter from vial. Solvents such as hexane, methanol and isopropyl alcohol are often used to wet the filter before wiping. These also depend on the analysis to be performed. In some cases, distilled, deionized water is used.
- Wipe a 4-square-inch (100-square-centimeter) area.
- Fold the filter with the exposed area in, fold again, place in vial and cap the vial. It is especially important that the sampler change gloves between samples.
- Include at least one blank filter treated in the same manner, excluding wiping, for each sampled area.

5.5.2 Sample Documentation

In order to track each sample through shipping and analysis, the following documents will be prepared:

- Sample Labels (One per sample bottle).
- Chain-of-Custody Records and Seals.
- Airbills (One for each shipment to an individual laboratory).

In addition, a field log book will be kept by the sampling team leader. The log book will include daily entries describing all site and sampling activities.

5.5.3 Sample Packaging and Shipping

In many cases, samples collected for TCDD analysis may be shipped as high-hazard samples. See Procedure SA-6.1 and Attachment B for proper high-hazard packaging and shipping procedures.

5.5.4 Decontamination

All sampling equipment is to be decontaminated as follows:

- Alconox and potable water wash
- Potable water rinse
- Alcohol rinse
- 1,1,1-Trichloroethane rinse
- Air dry

A sample of the 1,1,1-trichloroethane must be submitted as a rinsate sample. A volume of 6 ounces is to be collected in an 8-ounce glass jar.

All wastes are to be containerized and properly labeled.

6.0 REFERENCES

Casis, J. A., et al., 1985. Guidance Document for cleanup of Surface Tank and Drum Sites. Prepared for Office of Emergency and Remedial Response, U.S. EPA, Washington, D.C. under Contract No. 68-01-6930.

Crawley, W. W., R. L. Shriver, and D. C. Anderson, 1985. In-Situ Sampling of Hazardous Waste Surface Impoundments. Proceedings of the 6th National Conference on Management of Uncontrolled Hazardous Waste Sites, November 4-6, 1985. HMCRI, Silver Spring, Maryland.

Ebasco Services Incorporated; REM III Field Technical Guideline No. FT-7.12, February 28, 1986.

OSHA, 1984 Industrial Hygiene Technical Manual Instruction CPL 2-2.20A, Office of Health Compliance, OSHA Washington, D.C. U.S. EPA, 1982, Methods for Organic Chemical Analysis of Municipal and Industrial Wastewater. EPA-600/4-82-057. Environmental Monitoring and Support Laboratory, Cincinnati, Ohio.

OSHA, 1989, Hazardous Waste Operations and Emergency Response (29 CFR 1910.120) USDOL, Washington, D.C.

U.S. EPA, 1984. User's Guide to the Contract Laboratory Program Office of Emergency and Remedial Response, U.S. EPA, Washington, D.C.

ATTACHMENT A
TECHNIQUES FOR OPENING CONTAINERS

Types	Size	DOT Designation	Type of Opening	Recommended Opening Technique
Steel drum, open-head, unlined and lined	5-110G	DOT 5 - DOT 6 - DOT 17 - DOT 37 - DOT 42 -	Detachable steel lid with a clamp or lever-locking ring, or a ring with forged lugs and secured by a bolt.	Remove bolt. If possible, relieve pressure on clamp or lever-locking ring remotely (i.e., lanyard); remove ring with lanyard. Remove lid by hand.
Steel drum, closed-head, lined	5-110G	DOT 5 - DOT 6 - DOT 17 - DOT 37 - DOT 42 -	Plastic bung opening not larger than 2.3 inches.	Preferred method is to remotely open bung. Manually open otherwise.
Steel drum, closed-head, unlined (steel, monel, stainless, nickel, and aluminum)	5-110G	DOT 5 - DOT 6 - DOT 17 - DOT 37 - DOT 42 -	Steel or other metal bung not over 2.3 inches.	Remote method.
Burlap bag, double Kraft paper bag, cloth bag, plastic bag	Various	DOT 36 - DOT 44 - DOT 45 -	Various.	Open with sharp implement; reseal bag or overpack in fiberpack.
Glass carboys and jugs	6-20G	Usually DOT 1 - branded into the wooden outer sheathing; often sheathing is no longer present.	Lapped or ground glass stopper; occasionally a plastic screw cap will be encountered.	Manually.
Laboratory reagent bottles (amber bottles), small reagent cans	Various	None	Screw top or press lid.	Usually encountered in lab packs. Not to be handled or sampled. Replace drum lid carefully. Contact ZPMO for action.
Polyethylene and other plastic drums or barrels	5-110G	DOT 2 -	Usually bung opening not over 2.7 inches in diameter.	Manually.
Gas cylinders	Various	DOT 3 - DOT 4 - DOT 8 - DOT 39 -	Valve, threaded fitting, quick-connect or puncture-type fittings.	Not to be handled or sampled. Contact ZPMO for action.
Fiberpack or corrugated	5-110G	DOT 12 - DOT 21 - DOT 23 -	Usually a detachable plastic lid with a clamp or lever-locking ring.	Manually remove locking ring and lid.

ATTACHMENT B
PROCEDURES FOR PACKAGING AND SHIPPING HIGH-HAZARD SAMPLES

The U.S. Department of Transportation and other regulatory agencies have specific requirements addressing the packaging, labeling and shipping of hazardous materials (including high-hazard samples). These requirements may or may not apply to Tetra Tech NUS depending upon the chemical and physical properties of samples to be shipped. Given that these requirements can vary considerably, and it is illegal to ship hazardous materials that are not properly packaged and labeled, specific procedures for hazardous materials cannot be identified within the scope of this SOP. Should site activities generate a potentially hazardous material in the form of a collected sample, the following actions must be taken:

- As soon as possible after collecting a high-hazard sample (or as early as possible in anticipation of collecting a high-hazard sample), the FOL must contact Health Sciences in Pittsburgh (412/921/7090). This notification must include the volume of the sample collected, the likely composition of the sample, and any observed properties (color, odor, etc.) of interest in characterizing the sample. Do not wait until you are about to package the sample to contact Health Sciences, as this may delay shipping your sample on-time.

- In concert with Health Sciences, the Proper Shipping Name will be identified for the sample to be shipped. Health Sciences will also identify how the sample needs to be packaged and labeled, and will coordinate securing the proper package and label(s) for shipment if necessary.

- Only employees who have participated in the TtNUS course "Shipping Hazardous Materials" (or similar pre-approved DOT shipping course) are permitted to offer a hazardous material for shipment. If you have not received this training, but anticipate you will need to ship a hazardous material, you should contact Health Sciences or your local Safety Representative to arrange to receive this training.

Questions regarding application of this guidance for high-hazard samples or any other hazardous material should be directed to Health Sciences in Pittsburgh.

ATTACHMENT C
METHODS OF SAMPLING STRATIFIED CONTENTS OF TANKS

1. Sampling Using the Bacon Bomb Sampler

Discussion

The Bacon Bomb (Figure C-1) is designed for the withdrawal of samples by the "thief" method from various levels within a storage tank. It consists of a cylindrical body with an internal tapered plunger that acts as a valve to admit the sample. A line attached to the top of the plunger is used to open and close the valve. A removable top cover provides a point of attachment for the sample and has a locking mechanism to keep the plunger closed after sampling. The Bacon Bomb is usually constructed of chrome-plated brass and bronze with a rubber O-ring acting as the plunger sealing surface. Stainless steel versions are also available. The volumetric capacity is 8, 16, or 32 ounces (236, 473, or 946 milliliters).

Uses

The Bacon Bomb is a heavy sampler for viscous materials held in large storage tanks or in lagoons. If a more non-reactive sampler is needed, the stainless steel version should be used or the samplers could be coated with Teflon.

Sampling Method

1. Attach the sample line and the plunger line to the sampler.
2. Measure and then mark the sampling line at the desired depth for sampling.
3. Gradually lower the sampler by the sample line until the desired level is reached.
4. When the desired level is reached, pull up on the plunger line and allow the sampler to fill before releasing the plunger line to seal off the sampler.
5. Retrieve the sampler by the sample line, being careful not to pull up on the plunger line and thereby prevent accidental opening of the bottom valve.
6. Rinse or wipe off the exterior of the sampler body.
7. Position the sampler over the sample container and release its contents by pulling up on the plunger line.
8. Thoroughly decontaminate the sampler prior to next use.

ATTACHMENT C
METHODS OF SAMPLING STRATIFIED CONTENTS OF TANKS
PAGE TWO

2. Sampling using the Weighted Bottle Sampler

Discussion

The weighted bottle sampler consists of a glass bottle, a weight sinker, a bottle stopper, and a line for opening the bottle and lowering and raising the sampler during sampling (Figure C-2). There are variations of this sampler, as illustrated in the American Society of Testing and Materials (ASTM) Methods D0270 and E-300. This sampler can be either fabricated or purchased commercially.

Uses

Weighted bottle samplers are used to sample liquids at a particular depth. These samplers are difficult to use in very viscous liquids. In addition, the outside of the bottle is exposed to the waste. This is undesirable if the bottle is used as the sample container. An alternative to the weighted bottle sampler is the Kemmerer bottle.

Sampling Method

1. Gently lower the sampler into the liquid to the desired depth so as not to remove the stopper prematurely.

2. Pull out the stopper with a sharp jerk of the sampler line.

3. Allow the bottle to fill completely, as evidenced by the cessation of air bubbles.

4. Raise the sampler and cap the bottle.

5. The bottle can be used as the sample container, but it must be thoroughly decontaminated.

ATTACHMENT C
METHODS OF SAMPLING STRATIFIED CONTENTS OF TANKS
PAGE THREE

3. Collection of Samples from Depth with a Kemmerer Bottle

Discussion

The Kemmerer bottle is a messenger-activated sampling device (see Figure C-3). In the open position, liquid flows easily through the device. Once lowered to the desired depth, a messenger is dropped down the sample line, tripping the release mechanism and closing the bottle. In the closed position, the bottle is sealed, both on top and bottom, from any additional contact with the liquid column and the sample can be retrieved. Most commercially-available Kemmerer bottles are of brass or plastic construction.

Uses

The Kemmerer bottle is currently the most practical method of collecting discrete, at-depth samples from vessels. The application is limited, however, by the incompatibility of various construction materials with some analytical techniques. Proper selection, i.e., all metal assemblies for organic analysis, or all plastic assemblies for trace element analysis, will overcome this deficiency.

Sampling Method

1. Inspect Kemmerer bottle for thorough cleaning and ensure that sample drain valve is closed (if bottle is so equipped).

2. Measure and then mark sample line at desired sampling length.

3. Open bottle by lifting top stopper-trip head assembly.

4. Gradually lower bottle until desired level is reached (predesignated mark from Step 2).

5. Place messenger on sample line and release.

6. Retrieve sampler; hold sampler by center stem to prevent accidental opening of bottle stopper.

7. Rinse or wipe off exterior of sampler body (wear proper gloves and protective clothing).

8. Recover sample by grasping lower stopper and sampler body with one hand (gloved), and transfer sample by either (a) lifting top stopper with other hand and carefully pouring contents into sample bottles, or (b) holding drain valve (if present) over sample bottle and opening valve.

9. Thoroughly decontaminate the sampler prior to next use.

1 **FIGURE C-1**
BACON BOMB SAMPLER

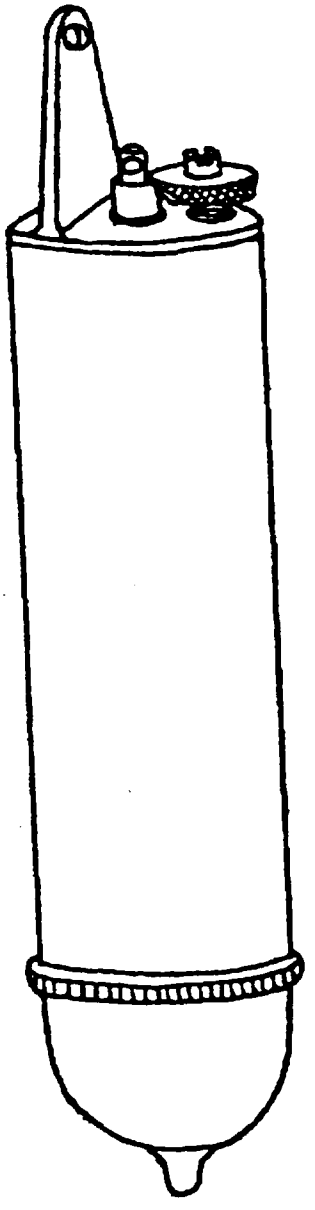

FIGURE C-2
WEIGHTED BOTTLE SAMPLER

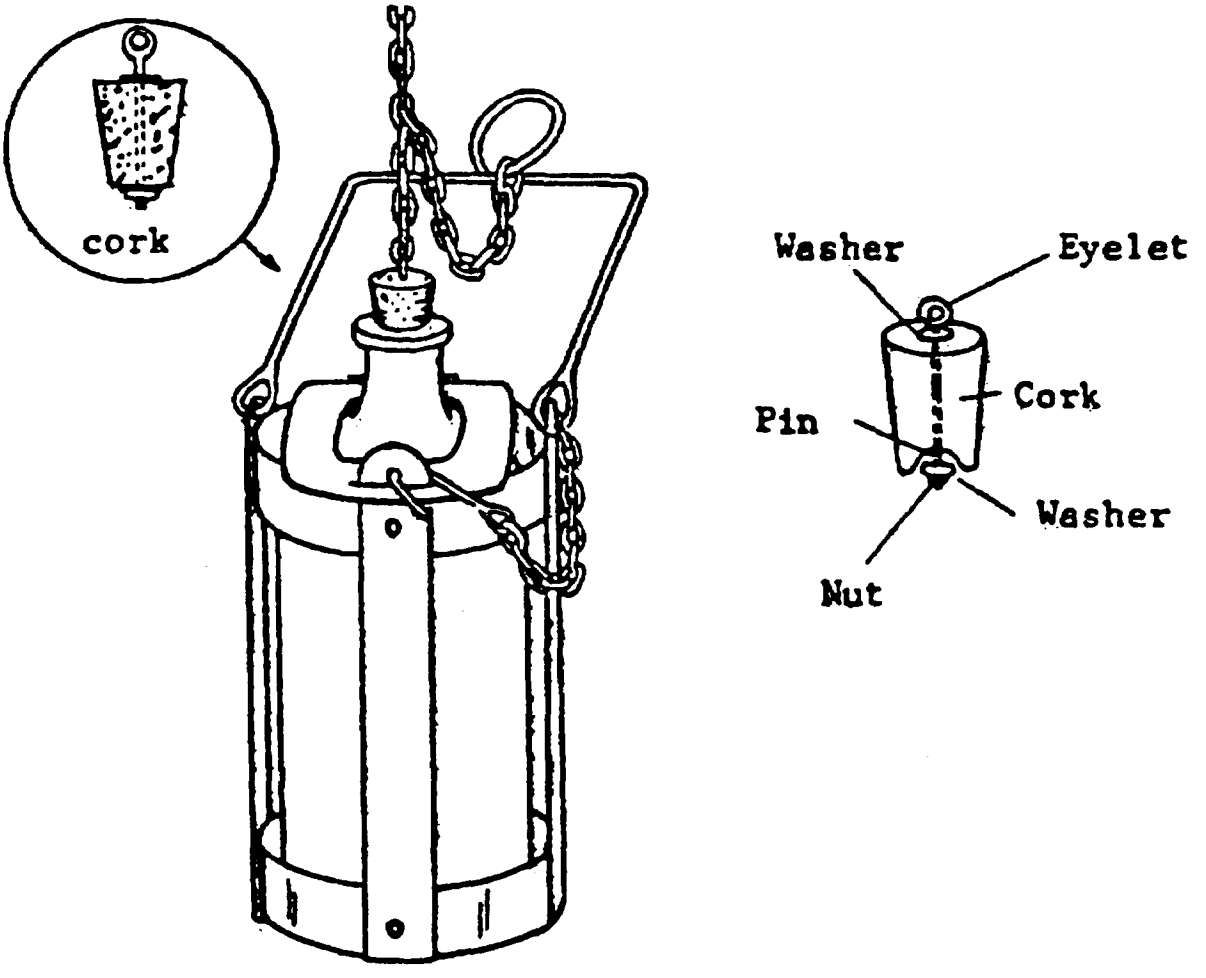

1000-ml (1-quart) weighted bottle catcher

FIGURE C-3
MODIFIED KEMMERER SAMPLER

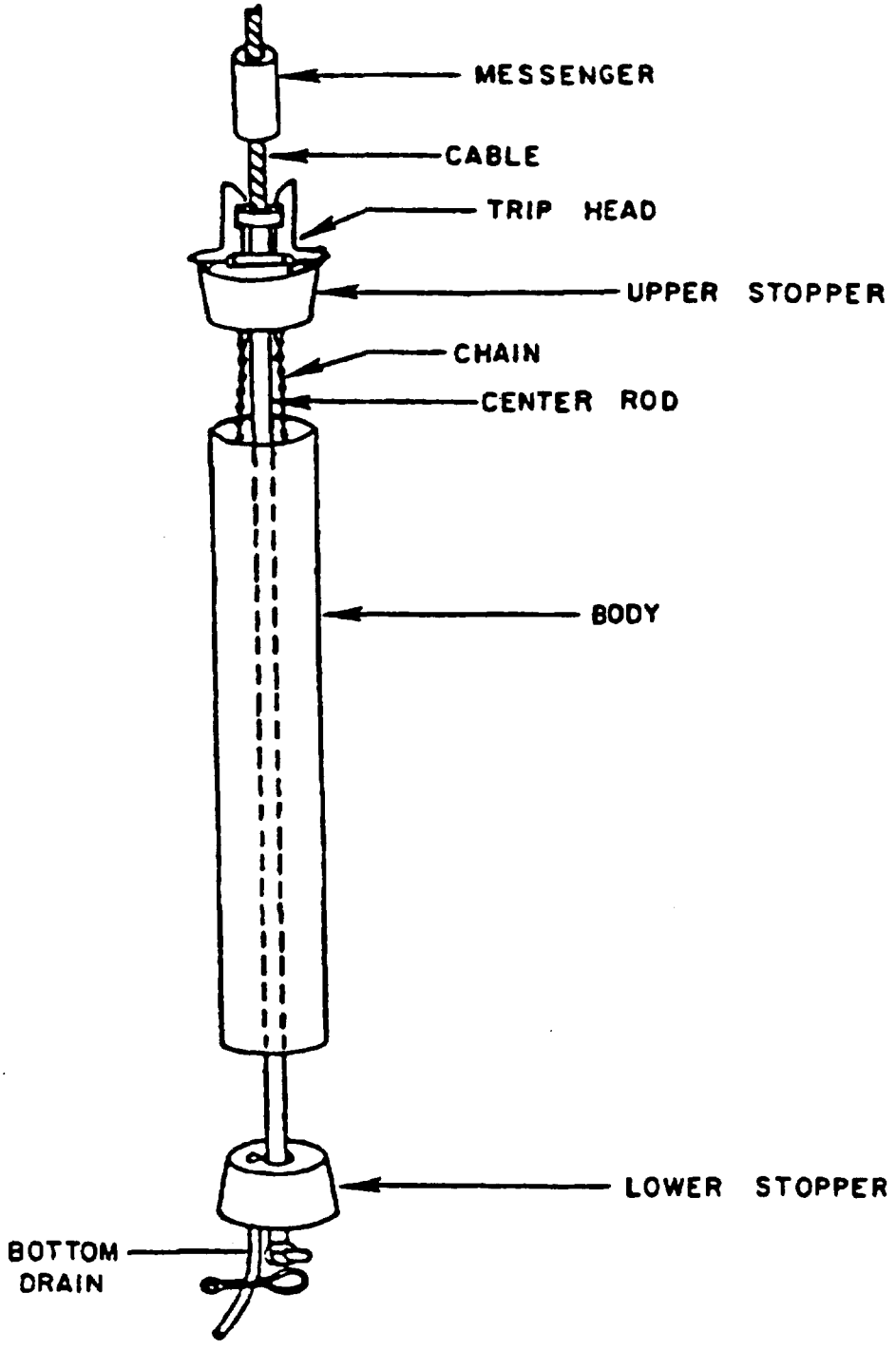

ATTACHMENT D
COLLECTION OF LIQUID CONTAINERIZED WASTES USING GLASS TUBES

Description

Liquid samples from opened containers are collected using lengths of glass tubing. The glass tubes are normally 122 centimeters in length and 6 to 16 millimeters inside diameters. Longer tubes may be used but larger diameter tubing is not effective. The tubing allows inspection of the tank contents for stratification. This method should not be attempted with less than a two-person sampling team.

Uses

This method provides a quick, relatively inexpensive means of collecting containerized wastes. The major disadvantage is from potential sample loss, which is especially prevalent when sampling low viscosity fluids. Splashing can also be a problem, and proper protective clothing should always be worn.

Sampling Method

1. Remove cover from sample container opening.
2. Insert glass tubing almost to the bottom of the container. Try to keep at least 30 centimeters of tubing above the top of the container.
3. Allow the waste in the tank to reach its natural level in the tube, then cap the top of the tube with a rubber stopper or cover tightly with gloved thumb.
4. Carefully remove the capped tube from the tank and insert the uncapped end in the sample container.
5. Release the thumb or stopper on the tube and allow the sample container to fill to approximately 90 percent of its capacity.
6. Repeat Steps 2 through 6 if more volume is needed to fill the sample container.

APPENDIX C-4

USEPA REGION I LOW STRESS PURGING AND SAMPLING PROCEDURES

RECEIVED
SEP 27 1996
Brown & Root Environmental
Wilmington Massachusetts 01887

U.S. ENVIRONMENTAL PROTECTION AGENCY
REGION I

LOW STRESS (low flow) PURGING AND SAMPLING PROCEDURE FOR THE COLLECTION OF GROUND WATER SAMPLES FROM MONITORING WELLS

I. SCOPE & APPLICATION

This standard operating procedure (SOP) provides a general framework for collecting ground water samples that are indicative of mobile organic and inorganic loads at ambient flow conditions (both the dissolved fraction and the fraction associated with mobile particulates). The SOP emphasizes the need to minimize stress by low water-level drawdowns, and low pumping rates (usually less than 1 liter/min) in order to collect samples with minimal alterations to water chemistry. This SOP is aimed primarily at sampling monitoring wells that can accept a submersible pump and have a screen, or open interval length of 10 feet or less (this is the most common situation). However, this procedure is flexible and can be used in a variety of well construction and ground-water yield situations. Samples thus obtained are suitable for analyses of ground water contaminants (volatile and semi-volatile organic analytes, pesticides, PCBs, metals and other inorganics), or other naturally occurring analytes.

This procedure does not address the collection of samples from wells containing light or dense non-aqueous phase liquids (LNAPLs and DNAPLs). For this the reader may wish to check: Cohen, R.M. and J.W. Mercer, 1993, DNAPL Site Evaluation; C.K. Smoley (CRC Press), Boca Raton, Florida and U.S. Environmental Protection Agency, 1992, RCRA Ground-Water Monitoring: Draft Technical Guidance; Washington, DC (EPA/530-R-93-001).

The screen, or open interval of the monitoring well should be optimally located (both laterally and vertically) to intercept existing contaminant plume(s) or along flowpaths of potential contaminant releases. It is presumed that the analytes of interest move (or potentially move) primarily through the more permeable zones within the screen, or open interval.

Use of trademark names does not imply endorsement by U.S.EPA but is intended only to assist in identification of a specific type of device.

Proper well construction and development cannot be overemphasized, since the use of installation techniques that are appropriate to the hydrogeologic setting often prevents "problem well" situations from occurring. It is also recommended that as part of development or redevelopment the well should be tested to determine the appropriate pumping rate to obtain stabilization of field indicator parameters with minimal drawdown in shortest amount of time. With this information field crews can then conduct purging and sampling in a more expeditious manner.

The mid-point of the saturated screen length (which should not exceed 10 feet) is used by convention as the location of the pump intake. However, significant chemical or permeability contrast(s) within the screen may require additional field work to determine the optimum vertical location(s) for the intake, and appropriate pumping rate(s) for purging and sampling more localized target zone(s). Primary flow zones (high(er) permealability and/or high(er) chemical concentrations) should be identified in wells with screen lengths longer than 10 feet, or in wells with open boreholes in bedrock. Targeting these zones for water sampling will help insure that the low stress procedure will not underestimate contaminant concentrations. The Sampling and Analysis Plan must provide clear instructions on how the pump intake depth(s) will be selected, and reason(s) for the depth(s) selected.

Stabilization of indicator field parameters is used to indicate that conditions are suitable for sampling to begin. Achievement of turbidity levels of less than 5 NTU and stable drawdowns of less than 0.3 feet, while desirable, are not mandatory. Sample collection may still take place provided the remaining criteria in this procedure are met. If after 4 hours of purging indicator field parameters have not stabilized, one of 3 optional courses of action may be taken: a) continue purging until stabilization is achieved, b) discontinue purging, do not collect any samples, and record in log book that stabilization could not be achieved (documentation must describe attempts to achieve stabilization) c) discontinue purging, collect samples and provide full explanation of attempts to achieve stabilization (note: there is a risk that the analytical data obtained, especially metals and strongly hydrophobic organic analytes, may not meet the sampling objectives).

Changes to this SOP should be proposed and discussed when the site Sampling and Analysis Plan is submitted for approval. Subsequent requests for modifications of an approved plan must include adequate technical justification for proposed changes. All changes and modifications must be approved before implementation in field.

II. EQUIPMENT

A. Extraction device

Adjustable rate, submersible pumps are preferred (for example, centrifugal or bladder pump constructed of stainless steel or Teflon).

Adjustable rate, peristaltic pumps (suction) may be used with caution. Note that EPA guidance states: "Suction pumps are not recommended because they may cause degassing, pH modification, and loss of volatile compounds" (EPA/540/P-87/001, 1987, page 8.5-11).

The use of inertial pumps is discouraged. These devices frequently cause greater disturbance during purging and sampling and are less easily controlled than the pumps listed above. This can lead to sampling results that are adversely affected by purging and sampling operations, and a higher degree of data variability.

B. Tubing

Teflon or Teflon lined polyethylene tubing are preferred when sampling is to include VOCs, SVOCs, pesticides, PCBs and inorganics.

PVC, polypropylene or polyethylene tubing may be used when collecting samples for inorganics analyses. However, these materials should be used with caution when sampling for organics. If these materials are used, the equipment blank (which includes the tubing) data must show that these materials do not add contaminants to the sample.

Stainless steel tubing may be used when sampling for VOCs, SVOCs, pesticides, and PCBs. However, it should be used with caution when sampling for metals.

The use of 1/4 inch or 3/8 inch (inner diameter) tubing is preferred. This will help ensure the tubing remains liquid filled when operating at very low pumping rates.

Pharmaceutical grade (Pharmed) tubing should be used for the section around the rotor head of a peristaltic pump, to minimize gaseous diffusion.

C. Water level measuring device(s), capable of measuring to 0.01 foot accuracy (electronic "tape", pressure transducer). Recording pressure transducers, mounted above the pump, are especially helpful in tracking water levels during pumping operations, but their use

must include check measurements with a water level "tape" at the start and end of each record.

D. Flow measurement supplies (e.g., graduated cylinder and stop watch).

E. Interface probe, if needed.

F. Power source (generator, nitrogen tank, etc.). If a gasoline generator is used, it must be located downwind and at least 30 feet from the well so that the exhaust fumes do not contaminate the samples.

G. Indicator field parameter monitoring instruments - pH, Eh, dissolved oxygen (DO), turbidity, specific conductance, and temperature. Use of a flow-through-cell is required when measuring all listed parameters, except turbidity. Standards to perform field calibration of instruments. Analytical methods are listed in 40 CFR 136, 40 CFR 141, and SW-846. For Eh measurements, follow manufacturer's instructions.

H. Decontamination supplies (for example, non-phosphate detergent, distilled/deionized water, isopropyl alcohol, etc.).

I. Logbook(s), and other forms (for example, well purging forms).

J. Sample Bottles.

K. Sample preservation supplies (as required by the analytical methods).

L. Sample tags or labels.

M. Well construction data, location map, field data from last sampling event.

N. Well keys.

O. Site specific Sample and Analysis Plan/Quality Assurance Project Plan.

P. PID or FID instrument (if appropriate) to detect VOCs for health and safety purposes, and provide qualitative field evaluations.

III. PRELIMINARY SITE ACTIVITIES

Check well for security damage or evidence of tampering, record pertinent observations.

Lay out sheet of clean polyethylene for monitoring and sampling equipment.

Remove well cap and immediately measure VOCs at the rim of the well with a PID or FID instrument and record the reading in the field logbook.

If the well casing does not have a reference point (usually a V-cut or indelible mark in the well casing), make one. Describe its location and record the date of the mark in the logbook.

A synoptic water level measurement round should be performed (in the shortest possible time) before any purging and sampling activities begin. It is recommended that water level depth (to 0.01 ft.) and total well depth (to 0.1 ft.) be measured the day before, in order to allow for re-settlement of any particulates in the water column. If measurement of total well depth is not made the day before, it should not be measured until after sampling of the well is complete. All measurements must be taken from the established referenced point. Care should be taken to minimize water column disturbance.

Check newly constructed wells for the presence of LNAPLs or DNAPLs before the initial sampling round. If none are encountered, subsequent check measurements with an interface probe are usually not needed unless analytical data or field head space information signal a worsening situation. Note: procedures for collection of LNAPL and DNAPL samples are not addressed in this SOP.

IV. PURGING AND SAMPLING PROCEDURE

Sampling wells in order of increasing chemical concentrations (known or anticipated) is preferred.

1. Install Pump

Lower pump, safety cable, tubing and electrical lines slowly (to minimize disturbance) into the well to the midpoint of the zone to be sampled. The Sampling and Analysis Plan should specify the sampling depth, or provide criteria for selection of intake depth for each well (see Section I). If possible keep the pump intake at least two

feet above the bottom of the well, to minimize mobilization of particulates present in the bottom of the well. Collection of turbid free water samples may be especially difficult if there is two feet or less of standing water in the well.

2. Measure Water Level

Before starting pump, measure water level. If recording pressure transducer is used-initialize starting condition.

3. Purge Well

3a. Initial Low Stress Sampling Event

Start the pump at its lowest speed setting and slowly increase the speed until discharge occurs. Check water level. Adjust pump speed until there is little or no water level drawdown (less than 0.3 feet). If the minimal drawdown that can be achieved exceeds 0.3 feet but remains stable, continue purging until indicator field parameters stabilize.

Monitor and record water level and pumping rate every three to five minutes (or as appropriate) during purging. Record any pumping rate adjustments (both time and flow rate). Pumping rates should, as needed, be reduced to the minimum capabilities of the pump (for example, 0.1 - 0.4 l/min) to ensure stabilization of indicator parameters. Adjustments are best made in the first fifteen minutes of pumping in order to help minimize purging time. During pump start-up, drawdown may exceed the 0.3 feet target and then "recover" as pump flow adjustments are made. Purge volume calculations should utilize stabilized drawdown value, not the initial drawdown. Do not allow the water level to fall to the intake level (if the static water level is above the well screen, avoid lowering the water level into the screen). The final purge volume must be greater than the stabilized drawdown volume plus the extraction tubing volume.

Wells with low recharge rates may require the use of special pumps capable of attaining very low pumping rates (bladder, peristaltic), and/or the use of dedicated equipment. If the recharge rate of the well is lower than extraction rate capabilities of currently manufactured pumps and the well is essentially dewatered during purging, then the well should be sampled as soon as the water level has recovered sufficiently to collect the appropriate volume needed for all anticipated samples (ideally the intake should not be moved during this recovery period). Samples may then be collected even though the indicator field parameters have not stabilized.

3b. Subsequent Low Stress Sampling Events

After synoptic water level measurement round, check intake depth and drawdown information from previous sampling event(s) for each well. Duplicate, to the extent practicable, the intake depth and extraction rate (use final pump dial setting information) from previous event(s). Perform purging operations as above.

4. Monitor Indicator Field Parameters

During well purging, monitor indicator field parameters (turbidity, temperature, specific conductance, pH, Eh, DO) every three to five minutes (or less frequently, if appropriate). Note: during the early phase of purging emphasis should be put on minimizing and stabilizing pumping stress, and recording those adjustments. Purging is considered complete and sampling may begin when all the above indicator field parameters have stabilized. Stabilization is considered to be achieved when three consecutive readings, taken at three (3) to five (5) minute intervals, are within the following limits:

turbidity (10% for values greater than 1 NTU),
DO (10%),
specific conductance (3%),
temperature (3%),
pH (± 0.1 unit),
ORP/Eh (± 10 millivolts).

All measurements, except turbidity, must be obtained using a flow-through-cell. Transparent flow-through-cells are preferred, because they allow field personnel to watch for particulate build-up within the cell. This build-up may affect indicator field parameter values measured within the cell and may also cause an underestimation of turbidity values measured after the cell. If the cell needs to be cleaned during purging operations, continue pumping and disconnect cell for cleaning, then reconnect after cleaning and continue monitoring activities.

The flow-through-cell must be designed in a way that prevents air bubble entrapment in the cell. When the pump is turned off or cycling on/off (when using a bladder pump), water in the cell must not drain out. Monitoring probes must be submerged in water at all times. If two flow-through-cells are used in series, the one containing the dissolved oxygen probe should come first (this parameter is most susceptible to error if air leaks into the system).

5. Collect Water Samples

Water samples for laboratory analyses must be collected before water has passed through the flow-through-cell (use a by-pass assembly or disconnect cell to obtain sample).

VOC samples should be collected first and directly into pre-preserved sample containers. Fill all sample containers by allowing the pump discharge to flow gently down the inside of the container with minimal turbulence.

During purging and sampling, the tubing should remain filled with water so as to minimize possible changes in water chemistry upon contact with the atmosphere. It is recommended that 1/4 inch or 3/8 inch (inside diameter) tubing be used to help insure that the sample tubing remains water filled. If the pump tubing is not completely filled to the sampling point, use one of the following procedures to collect samples: (1) add clamp, connector (Teflon or stainless steel) or valve to constrict sampling end of tubing; (2) insert small diameter Teflon tubing into water filled portion of pump tubing allowing the end to protrude beyond the end of the pump tubing, collect sample from small diameter tubing; (3) collect non-VOC samples first, then increase flow rate slightly until the water completely fills the tubing, collect sample and record new drawdown, flow rate and new indicator field parameter values.

Add preservative, as required by analytical methods, to samples immediately after they are collected if the sample containers are not pre-preserved. Check analytical methods (e.g. EPA SW-846, water supply, etc.) for additional information on preservation. Check pH for all samples requiring pH adjustment to assure proper pH value. For VOC samples, this will require that a test sample be collected during purging to determine the amount of preservative that needs to be added to the sample containers prior to sampling.

If determination of filtered metal concentrations is a sampling objective, collect filtered water samples using the same low flow procedures. The use of an in-line filter is required, and the filter size (0.45 um is commonly used) should be based on the sampling objective. Pre-rinse the filter with approximately 25 - 50 ml of ground water prior to sample collection. Preserve filtered water sample immediately. Note: filtered water samples are not an acceptable substitute for unfiltered samples when the monitoring objective is to obtain chemical concentrations of total mobile contaminants in ground water for human health risk calculations.

Label each sample as collected. Samples requiring cooling (volatile organics, cyanide, etc.) will be placed into a cooler with ice or refrigerant for delivery to the laboratory. Metal samples after acidification to a pH less than 2 do not need to be cooled.

6. Post Sampling Activities

If recording pressure transducer is used, remeasure water level with tape.

After collection of the samples, the pump tubing may either be dedicated to the well for resampling (by hanging the tubing inside the well), decontaminated, or properly discarded.

Before securing the well, measure and record the well depth (to 0.1 ft.), if not measured the day before purging began. Note: measurement of total well depth is optional after the initial low stress sampling event. However, it is recommended if the well has a "silting" problem or if confirmation of well identity is needed.

Secure the well.

V. DECONTAMINATION

Decontaminate sampling equipment prior to use in the first well and following sampling of each subsequent well. Pumps will not be removed between purging and sampling operations. The pump and tubing (including support cable and electrical wires which are in contact with the well) will be decontaminated by one of the procedures listed below.

<u>Procedure 1</u>

The decontaminating solutions can be pumped from either buckets or short PVC casing sections through the pump or the pump can be disassembled and flushed with the decontaminating solutions. It is recommended that detergent and isopropyl alcohol be used sparingly in the decontamination process and water flushing steps be extended to ensure that any sediment trapped in the pump is removed. The pump exterior and electrical wires must be rinsed with the decontaminating solutions, as well. The procedure is as follows:

Flush the equipment/pump with potable water.

Flush with non-phosphate detergent solution. If the solution is

recycled, the solution must be changed periodically.

Flush with potable or distilled/deionized water to remove all of the detergent solution. If the water is recycled, the water must be changed periodically.

Flush with isopropyl alcohol (pesticide grade). If equipment blank data from the previous sampling event show that the level of contaminants is insignificant, then this step may be skipped.

Flush with distilled/deionized water. The final water rinse must not be recycled.

Procedure 2

Steam clean the outside of the submersible pump.

Pump hot potable water from the steam cleaner through the inside of the pump. This can be accomplished by placing the pump inside a three or four inch diameter PVC pipe with end cap. Hot water from the steam cleaner jet will be directed inside the PVC pipe and the pump exterior will be cleaned. The hot water from the steam cleaner will then be pumped from the PVC pipe through the pump and collected into another container. Note: additives or solutions should not be added to the steam cleaner.

Pump non-phosphate detergent solution through the inside of the pump. If the solution is recycled, the solution must be changed periodically.

Pump potable water through the inside of the pump to remove all of the detergent solution. If the solution is recycled, the solution must be changed periodically.

Pump distilled/deionized water through the pump. The final water rinse must not be recycled.

VI. FIELD QUALITY CONTROL

Quality control samples are required to verify that the sample collection and handling process has not compromised the quality of the ground water samples. All field quality control samples must be prepared the same as regular investigation samples with regard to sample volume, containers, and preservation. The following quality control samples shall be collected for each batch of samples (a batch

may not exceed 20 samples). Trip blanks are required for the VOC samples at a frequency of one set per VOC sample cooler.

Field duplicate.

Matrix spike.

Matrix spike duplicate.

Equipment blank.

Trip blank (VOCs).

Temperature blank (one per sample cooler).

Equipment blank shall include the pump and the pump's tubing. If tubing is dedicated to the well, the equipment blank will only include the pump in subsequent sampling rounds.

Collect samples in order from wells with lowest contaminant concentration to highest concentration. Collect equipment blanks after sampling from contaminated wells and not after background wells.

Field duplicates are collected to determine precision of sampling procedure. For this procedure, collect duplicate for each analyte group in consecutive order (VOC original, VOC duplicate, SVOC original, SVOC duplicate, etc.).

If split samples are to be collected, collect split for each analyte group in consecutive order (VOC original, VOC split, etc.). Split sample should be as identical as possible to original sample.

All monitoring instrumentation shall be operated in accordance with EPA analytical methods and manufacturer's operating instructions. EPA analytical methods are listed in 40 CFR 136, 40 CFR 141, and SW-846 with exception of Eh, for which the manufacturer's instructions are to be followed. Instruments shall be calibrated at the beginning of each day. If a measurement falls outside the calibration range, the instrument should be re-calibrated so that all measurements fall within the calibration range. At the end of each day, check calibration to verify that instruments remained in calibration. Temperature measuring equipment, thermometers and thermistors, need not be calibrated to the above frequency. They should be checked for accuracy prior to field use according to EPA Methods and the manufacturer's instructions.

VII. FIELD LOGBOOK

A field log shall be kept to document all ground water field monitoring activities (see attached example matrix), and record all of the following:

Well identification.

Well depth, and measurement technique.

Static water level depth, date, time and measurement technique.

Presence and thickness of immiscible liquid (NAPL) layers and detection method.

Pumping rate, drawdown, indicator parameters values, and clock time, at the appropriate time intervals; calculated or measured total volume pumped.

Well sampling sequence and time of each sample collection.

Types of sample bottles used and sample identification numbers.

Preservatives used.

Parameters requested for analysis.

Field observations during sampling event.

Name of sample collector(s).

Weather conditions.

QA/QC data for field instruments.

Any problems encountered should be highlighted.

Description of all sampling equipment used, including trade names, model number, diameters, material composition, etc.

VIII. DATA REPORT

Data reports are to include laboratory analytical results, QA/QC information, and whatever field logbook information is needed to allow for a full evaluation of data useability.

EXAMPLE (Minimum Requirements) Page____of____

Well PURGING-FIELD WATER QUALITY MEASUREMENTS FORM

Location (Site/Facility Name)_____ Depth to _____/_____ of screen
Well Number_____ Date_____ (below MP) top bottom
Field Personnel_____ Pump Intake at (ft. below MP)_____
Sampling Organization_____ Purging Device; (pump type)_____
Identify MP_____

Clock Time 24 HR	Water Depth below MP ft	Pump Dial[1]	Purge Rate ml/min	Cum. Volume Purged liters	Temp. °C	Spec. Cond.[2] µS/cm	pH	ORP/ Eh[3] mv	DO mg/L	Turb-idity NTU	Comments

1. Pump dial setting (for example: hertz, cycles/min, etc).
2. µSiemens per cm(same as µmhos/cm)at 25°C.
3. Oxidation reduction potential (stand in for Eh).

APPENDIX D

FIELD DOCUMENTATION FORMS

BORING LOG FOR: _____

PROJECT NO.: _____

LOGGED BY: _____

DRILLED BY (Company/Driller): _____

GRD. SURFACE ELEVATION: _____

TRANSCRIBED BY: _____

ELEVATION FROM: _____

BORING NO.: _____

START DATE: _____

COMPLETION: DATE: _____

MON. WELL NO.: _____

CHECKED BY: _____

DEPTH (FEET)	BLOWS PER 6"	SAMP REC. / SAMP LENG.	SAMPLING TIME & SAMPLE NO. (QA/QC STATUS)	DEPTH MAT'L CHG./ WELL PROF'L	SOIL DENSITY/ CONSIS. or ROCK HARD.	CLR	MATERIAL CLASSIFICATION	USCS or ROCK BRKN	REMARKS (moisture condition; odors; geological classification; rock weathering; etc.)	FIELD SCREENING DATA *METHOD* = [FID, (PPM)]

TYPE OF DRILLING RIG: _____

METHOD OF ADVANCING BORING: _____

METHOD OF SOIL SAMPLING: _____

METHOD OF ROCK CORING: _____

GROUNDWATER LEVELS: _____

OTHER OBSERVATIONS: _____

BORING NO.:

Tetra Tech NUS, Inc.

TINUS Form 0018

TETRA TECH NUS, INC.

JAR HEADSPACE ANALYSIS LOG

SITE NAME: _____

SITE LOCATION: _____

PROJECT NO./CTO NO.: _____

SAMPLE LOCATION: _____

INSTRUMENT: _____

SERIAL NO.: _____

MODEL NO.: _____

SAMPLE PREP METHOD[1] _____

HEADSPACE ANALYST: _____

DATE: _____

SAMPLE TYPE[2]/NUMBER	SAMPLE DEPTH (FEET)	READING (ppm)	COMMENTS

Tt NUS Form 0008

1) (a) ambient temp
(h) heated (air)
(w) hot water bath

2) Type of Sample
SB Soil Boring
SD Sediment Sample
GW Groundwater Sample
TP Test Pit Sample
SS Soil Sample

TETRA TECH NUS, INC.

GROUNDWATER LEVEL MEASUREMENT SHEET

SITE INFORMATION

Site Name: _____ Municipality: _____

Project Number: _____ County: _____

Personnel: _____ State: _____

Date: _____ Street or Map Location: _____

(If Off-Site): _____

WEATHER CONDITIONS AND EQUIPMENT

Temperature Range: _____ Equipment No.: _____

Precipitation: _____ Equipment Number: _____

Barometric Pressure: _____ Latest Calibration Date: _____

Tidally-Influenced [ ] Yes [ ] No

Well or Piezometer Number	Date/Time	Elevation of Reference Point (Feet)*	Water Level Indicator Reading (Feet)*	Adjusted Depth (Feet)*	Groundwater Elevation (Feet)*

Tt NUS Form 0010

OVERBURDEN MONITORING WELL CONSTRUCTION LOG — TETRA TECH NUS, INC.

PROJECT NAME: _____ PROJECT NO: _____

PROJECT LOCATION: _____ WELL NO: _____

CLIENT: _____ BORING NO: _____

CONTRACTOR: _____ DRILLER: _____ BORING LOCATION: _____

LOGGED BY: _____ DATE: _____

CHECKED BY: _____ DATE: _____

PAGE: 1 OF 1

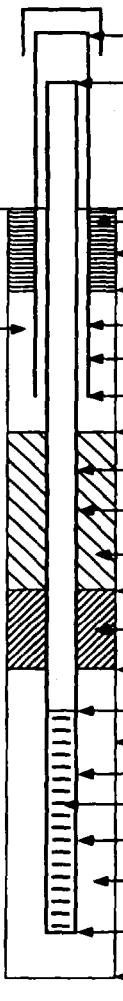

ELEVATION TOP OF PROTECTIVE CASING _____

ELEVATION TOP OF RISER PIPE _____

GROUND ELEVATION _____

SAND DRAIN LAYER

END OF BORING

- LENGTH OF PROTECTIVE CASING ABOVE GROUND SURFACE (Ft.) _____
- LENGTH OF RISER PIPE ABOVE GROUND SURFACE (Ft.) _____
- TYPE OF SURFACE SEAL _____
- DIA. SURFACE SEAL BGS (In.) _____
- DEPTH TO BOTTOM OF SURFACE SEAL (Ft.) _____
- I.D. OF PROTECTIVE CASING (In.) _____
- TYPE OF PROTECTIVE CASING _____
- DEPTH BOTTOM OF PROTECTIVE CASING (Ft.) _____
- DEPTH BOTTOM OF DRAIN LAYER (Ft.) _____
- RISER PIPE (In.) I.D.: _____ O.D.: _____
- TYPE OF RISER PIPE _____
- TYPE OF BACKFILL AROUND RISER PIPE _____
- DEPTH TOP OF SEAL (Ft.) _____
- TYPE OF SEAL _____
- DEPTH BOTTOM OF SEAL (Ft.) _____
- DEPTH TOP OF PERVIOUS SECTION (Ft.) _____
- DIAMETER OF BOREHOLE (In.) _____
- TYPE OF PERVIOUS SECTION _____
- TYPE OF OPENINGS _____
- PERVIOUS SECTION (In.) I.D.: _____ O.D.: _____
- TYPE OF FILTER PACK AROUND PERVIOUS SECTION _____
- DEPTH BOTTOM OF PERVIOUS SECTION (Ft.) _____
- DEPTH BOTTOM OF FILTER PACK (Ft.) _____

GENERAL NOTE:

1. Entry of 0.00 for Ground Elevation, Elev. Top of Riser Pipe & Elev. Top of Protective Casing Indicates that Surveyed Ground Elevation Not Available.

TETRA TECH NUS, INC.

SAMPLE DATA SHEET - WELL DEVELOPMENT

Well No.: _____

PROJECT: _____
PROJECT NO.: _____
SAMPLE ID: _____

DATE: _____
WEATHER: _____
PERSONNEL: _____

Well Screen Depth: _____ / _____ ft. bgs
H&S Monitoring Instrument Reading _____

Pump Type/Material: _____
Pump Intake Depth: _____

Total Purge Volume = _____(gal)
Data Recorded By: _____

Time	Water Level ft below top PVC	Volume mL	Flow Rate mL/min	Temp °C	pH	Sp Cond mS/cm	DO mg/L	Turbidity NTU	Comments

Tt NUS Form 0013

TETRA TECH NUS, INC.

SAMPLE COLLECTION SUMMARY RECORD

PROJECT NAME: _____ TETRA TECH NUS JOB NO./PMS: _____

SAMPLING EVENT: _____ CASE NO.: _____ DAS NO.: _____

DATE	TIME	SAMPLE LOCATION	FIELD QC							COMMENTS

Tt NUS Form 0012

TETRA TECH NUS, INC.

VOC SOIL SAMPLE COLLECTION/PRESERVATION LOG SHEET

Sample Container Lot # _____ Preserved in the field Date: _____

			LOW CONCENTRATION VOC				HIGH CONCENTRATION				LAB
Sample #	Bottle Letter	Vial ID Number	Sodium Bisulfate ($NAHSO_4$) (mL)	Tare Weight Vial + Pres.(g)	Final Weight Vial + Pres. + Sample (g)	Soil Sample Weight (g)	Methanol (mL)	Tare Weight Vial + Pres. (g)	Final Weight (g)	Soil Sample Weight (g)	Final Weight Vial + Pres. + Sample (g)

Note: Tare weight = vial, preservative, cap and magnetic stirrer, if applicable

Severe effervescence: Yes ☐ No ☐

Laboratory Analysts initials: _____ Date: _____

Tt NUS Form 0040

o:\dept\staff\forms\ttforms\ttform40.doc

TETRA TECH NUS, INC.

SAMPLE LOG SHEET - SOLID PHASE

Site Name: _____
Sample ID: _____

Tetra Tech, NUS Job No./PMS _____
QC Information: _____ (if applicable)

Sample Method: _____
Depth Sampled: _____ feet
Sample Date & Time: ___/___/___ _____ hours Dup____ hours
Sampler(s): _____

Data Recorded By: _____
Signature

PID/OVA Monitor Reading: _____ ppm

TYPE OF SAMPLE: (Check all that apply)

____ Soil
____ Sediment
____ Lagoon/Pond
____ Grab
____ Trip Blank*
____ Rinsate Blank*
____ Field Duplicate collected
____ Other (Specify): _____

Description: (Sand, Clay, Muck, Peat, Dry, Moist, Wet, Etc.) _____

SAMPLE DATA/REMARKS: _____

ANALYSIS	BOTTLE LOT NO.	NOTES/SKETCH:

Tt NUS Form 0005A

TETRA TECH NUS, INC.

SAMPLE LOG SHEET - LIQUID PHASE

Site Name: _____

Sample ID: _____

Tetra Tech NUS Job No./PMS _____

QC Information: _____ (if applicable)

Sample Method/Device: _____

Depth Sampled: _____ feet Total Depth _____ feet (SW Only)

Sample Date & Time: ___/___/___ _____ hours

Sampler(s): _____

Date Recorded By: _____

Signature

TYPE OF SAMPLE: (Check all that apply)

- ____ Groundwater
- ____ Surface Water
- ____ Residential Supply
- ____ Grab
- ____ Composite
- ____ Trip Blank*
- ____ Rinsate Blank*
- ____ Field Duplicate Collected
- ____ Other (Specify): _____

*include sample source & lot No.

WELL PURGE DATA:

Well Depth	feet	Purge Start	hrs
Inside Diameter	Inches	Purge Stop Time	hrs
Water Level	feet	Total Gallons Purged	
Well Volume	gal.	Purge Method	

Color: _____ Turbidity: CLR/SL CLDY/CLDY/OPAQ

Micro Tip/OVA Monitor Reading: ppm

Sampling/Purge Data:

Vol. #	Temp °C	pH	Spec. Cond.	DO
0				
1				
3				
4				

ANALYSIS	BOTTLE LOT NO.	TRAFFIC REPORT NO.		COMMENTS
		ORGANIC	INORGANIC	

Tt NUS Form 0004

TETRA TECH NUS, INC.

SAMPLE LOG SHEET - "LOW FLOW" GROUNDWATER

Site Name: _____
Sample ID: _____

Tetra Tech NUS Job No./PMS _____
QC: _____ (If applicable)

Sample Method: _____
Depth Sampled: _____ Feet Screened Interval Depth _____ feet
Sample Date & Time: ____/____/____ _____ hours _____/Dup
Sampler(s): _____
Data Recorded By: _____ Signature: _____
Notes:

H&S Survey Meter _____ PPM Field Instrument Group A/B/C/D
Pre-pump insertion WL _____ ft Post - pump insertion WL _____ ft

Analysis	Bottle Lot#	Analysis	Bottle Lot #	Analysis	Bottle Lot #

Clock Time 24hr	Water Depth below MP ft	Pump Dial 1	Purge Rate ml/min	Cum. Volume Purged liters	Temp °C	Spec. Cond. 2 uS/cm	pH	ORP/Eh3 mv	DO mg/L	Turbidity NTU	Comments

1. Pump dial setting (for example: hertz, cycle/min, etc.)
2. Siemens per cm (same as umhos/cm) at 25 °C.
3. Oxidation reduction potential (stand in for Eh).

Tt NUS Form 0009

TETRA TECH NUS, INC.

SAMPLE LOG SHEET - "LOW FLOW" GROUNDWATER

Site Name: _____

Sample ID: _____

Tetra Tech NUS Job No./PMS _____

QC: _____ (If applicable)

Clock Time 24hr	Water Depth below MP ft	Pump Dial 1	Purge Rate ml/min	Cum. Volume Purged liters	Temp °C	Spec. Cond. 2 uS/cm	pH	ORP/Eh3 mv	DO mg/L	Turbidity NTU	Comments

1. Pump dial setting (for example: hertz, cycle/min, etc.)
2. Siemens per cm (same as umhos/cm) at 25 °C.
3. Oxidation reduction potential (stand in for Eh).

Tt NUS Form 0009

TETRA TECH NUS, INC.

YSI 6820 MULTIPARAMETER METER

Serial No.: _____ Model No.: _____ Decal No.: _____

Site Name: _____ Job No.: _____

Instrument is calibrated in accordance with Manufacturer's Instructions

DATE:	Pre Calibration Readings	Post Calibration Readings	PM Check	Calibration STDs (lot #'s)	Signature	Remarks
Cond. mS/cm						
pH = 4.0						
pH = 7.0						
pH = 10.0						
D.O. mg/l						
REDOX mV						
Turbidity 0 NTUs						
Turbidity 100 NTUs						
Temp °C						
Salinity 0/00						

DATE:						
Cond. mS/cm						
pH = 4.0						
pH = 7.0						
pH = 10.0						
D.O. mg/l						
REDOX mV						
Turbidity 0 NTUs						
Turbidity 100 NTUs						
Temp °C						
Salinity 0/00						

t NUS Form 0024

TETRA TECH NUS, INC.

HORIBA U-10 WATER QUALITY CHECKER

Serial No.: _____ Model No.: _____ Decal No.: _____

Site Name: _____ Job No.: _____ Buffer Lot No.: _____

Instrument is calibrated in accordance with Manufacturer's Instructions

Calibration Date	Initial Readings						Final Readings						Signature	Comments
	pH = 4.0	Cond. m/cm	Turbidity NTUs	D.O. mg/l	Temp. (°C)	Salinity	pH = 4.0	Cond. m/cm	Turbidity NTUs	D.O. mg/l	Temp. (°C)	Salinity		

Tt NUS Form 0023

APPENDIX E

NOTES FROM PLANNING AND TECHNICAL MEETINGS

Meeting notes
Kickoff Conference Call, Source Area Investigation
Centredale Manor TA
Work Assignment 043-TATA-016P
July 13, 2000

Attending:

Kathy Hunt, EPA
Ted Bazenas, EPA
Anna Krasko, EPA
Steve Parker, TtNUS
Charles Race, TtNUS
Arnold Ostrofsky, TtNUS

Phone call convened at 1:30

The scope of work (WAF Revision 4) for the source area investigation under Work Assignment No. 043-TATA-016P was reviewed to assure TtNUS could begin the work plan amendment and cost estimate. It was agreed that a technical meeting would be held at EPA offices later in July to discuss the technical aspects of the work.

The following issues were raised and addressed:

1. Task 1.2 – preparation of site management plan(s) – It was agreed that although the previous work under this WA was performed under the Sampling and Analysis plan (TtNUS October 1999), a new QAPP would need to be prepared for the source area investigation. This new QAPP would cover soil, groundwater, and air and wipe samples.

2. Task 2 – Environmental Sampling – TtNUS asked if the capped areas at the site could be driven on and drilled through without special consideration. EPA stated that this cap is permeable so drilling through the cap is not a problem.

3. Task 2 – Environmental Sampling – TtNUS clarified that the groundwater modeling to be performed would be conceptual model only, or if a temporal, or mathematical model would need to be performed as well to determine time at which contaminants would arrive at a specific location. EPA confirmed that the model would be a conceptual model to show input and output locations, and where contaminants could intercept the river. Groundwater and soil sample analysis will be performed for dioxins, PCBs, pesticides, VOCs, SVOCs, and metals.

4. Task 2 – Environmental Sampling - The use of Sudan IV dye, suggested in the scope of work is dangerous, and TtNUS asked if they could suggest an alternative method of finding NAPL, EPA agreed.

5. Task 2 – Environmental Sampling – TtNUS requested clarification on air and wipe samples. EPA stated that air samples would need to be collected in the building to augment sampling done in 1999, and wipe sampling would need to be conducted also in the building to determine safety of residents. Both parties agreed to discuss this at a later time.

6. Task 2 – Environmental Sampling – TtNUS asked if surface water analysis would be necessary, EPA stated that surface water data available is probably adequate, but groundwater / surface water interface samples may need to be collected.

It was also clarified that the investigation should be phased such that fieldwork could be conducted this fall, and after review of data, could be completed in the spring or summer of 2001.

TtNUS stated that the work plan would be submitted 30 days from the date of this conference call, the closest working day is August 11.

Meeting notes
First Technical Meeting, Source Area Investigation
Centredale Manor TA
Work Assignment 043-TATA-016P
July 27, 2000

Attending:

Andy Beliveau, EPA
Dick Willey, EPA
Anna Krasko, EPA
Cornell Rosiu, EPA
Steve Parker, TtNUS
Mike Healey, TtNUS
Lucy Guzman, TtNUS

Meeting convened at 1:30PM at EPA Region I Office in Boston

A. Krasko provided a brief introduction to the work assignment revision, and oriented everyone to the objectives of the source area investigation. She clarified that the local groundwater classification is GB, and that MCLs do not apply. It needs to be determined that contaminants are not migrating north to the local spring water bottling facility, and not migrating under the river to the west where the classification is GA. Then the only regulatory point is at the river, and contaminant discharges to the river must be identified and quantified if possible.

S. Parker provided a map of the area and oriented everyone to the physical features of the source area. There was a general discussion of the river behavior in this area, the possible geological setting, and the data needs that would fill the objectives of the study.

Sediment Sampling

The need for sediment samples downstream of Lymansville was discussed. The two reaches downstream of Lymansville dam are Manton and Dyerville. Manton is a small pond with a small ramp dam, and Dyerville is a steep sided deep pond. Both have residential and commercial properties abutting them. Manton has easy access points, and Dyerville has fewer access points. It was clarified that the sediments were previously sampled immediately upstream of these dams, but the general pond sediments were not. This effort should focus on the aquatic sediments of each reach, not on the sediments piled up behind the dams. Two bank samples shall also be collected, one from each of the new reaches.

In addition, sediment samples are needed from the pond at Assapumpsett Brook, to provide co-located sediment with future fish samples to be collected for the ecological risk assessment. Samples are also needed at depth from the Centredale raceway.

It was agreed that sediment sampling could be conducted under the existing Sampling and Analysis Plan. Samples will be analyzed for the same suite of contaminants as other aquatic sediment samples collected in 1999.

Air and Wipe Sampling

Anna Krasko stated that air samples are needed from the interior of the Centredale Manor building. Previous sampling was inconclusive because of the presence of known pollutant sources including open paint cans. After some discussion, it was agreed that air samples would be collected for volatile organics using suma canisters and method TO14 analysis. In addition, low flow particulate samples will be collected for dioxin analysis. Wipe samples will be collected from horizontal surfaces at likely areas, including doorways and mechanical spaces. Wipe samples will be analyzed for dioxin.

It was agreed that the air sampling and wipe sampling should be done in the spring, when Anne Marie Burke can participate in selection of sample stations and in the use and interpretation of the data.

Groundwater Sampling

A discussion was held regarding the approach for the groundwater investigation. M. Healey suggested the following approach:

1) Evaluate the surrounding bedrock outcrops to get a preliminary determination on the direction of bedrock fractures,
2) install a series of perimeter wells as clusters to determine vertical gradient and groundwater flow,
3) use this information to identify likely flow paths, then
4) Install a series of temporary well points to determine concentrations of contaminants in groundwater and location of discharge points to the river.

In the discussion that followed, it was decided that quick turnaround of analytical results would not be particularly beneficial. Limited groundwater samples should be analyzed for dioxins, since these contaminants are hydrophobic. Groundwater samples and wells should focus on analysis of volatile organics. PCBs are also present in the areas and may be used as indicator parameters. However, the study does need to evaluate possible transport of dioxins with colloidal particles.

A final conclusion was not reached regarding the approach suggested by M. Healey, and exact locations and numbers of wells were not decided upon. It was agreed that M. Healey and D. Willey would discuss the finer points of the investigation over the next several days.

Soil Sampling

After some discussion, it was agreed that the surface soils were well characterized at the site as a part of the emergency response actions. Some of the subsurface soils were also characterized at that time. It was agreed that the on-site sampling did not need to focus on the soils, at least in this first phase of the investigation. Soils will be sampled as a part of the well installation and characterization of the geology. Some of these samples, particularly those at depth, should be selected for laboratory analysis.

The meeting was adjourned at 4:00 PM