Site: Centredale
Break: 3.4
Other: 25650

EA LABORATORIES ANALYTICAL METHOD	EAL-M-405.1.01	GROUP: Inorganics
Biochemical Oxygen Demand (5 Day) Carbonaceous Biochemical Oxygen Demand (5 Day)	Page 1 of 7	

1.0 SCOPE AND APPLICATION

This method is applicable to drinking, surface, ground, and saline waters and domestic and industrial wastes. This method is approved for National Pollutant Discharge Elimination System (NPDES) compliance monitoring.

2.0 SUMMARY OF METHOD

A sample, or an appropriate dilution, is incubated in the dark for five days at 20 ± 1 °C. The sample can be seeded with a culture of microorganisms to ensure a viable population for the biochemical action. The biochemical oxygen demand (BOD) is the amount of oxygen consumed during incubation as measured by the difference between the final and initial dissolved oxygen in the sample.

3.0 DEFINITIONS

3.1 Biochemical oxygen demand is operationally defined as the amount of dissolved oxygen consumed per liter of sample after incubation in the dark for five days. Materials exerting an oxygen demand include organic material that is usable as food by aerobic organisms, oxidizable nitrogen from inorganic and organic compounds that serve as food for specific bacteria, and oxidizable inorganic species.
3.2 Carbonaceous biochemical oxygen demand is that part of the BOD that does not result from the oxidation of nitrogen. It is determined by adding a nitrification inhibitor, such as 2-chloro- 6-(trichloromethyl)pyridine, to the sample before incubation.
3.3 Ultimate biochemical oxygen demand is the BOD at the point where there is no further change in the oxygen demand of the sample (the asymptotic limit); an incubation period of 20 days is used to approximate this condition (Sawyer and McCarty, 1967).

4.0 SAMPLE HANDLING AND PRESERVATION

4.1 The samples should be collected in glass or polyethylene bottles and held at 4° ± 2°C until analyzed.
4.2 The NPDES holding time for BOD is 48 hours.

5.0 INTERFERENCES

Any conditions in the sample that would retard micrological activity, such as extremes of pH, residual chlorine, or the presence of heavy metals or toxic organics, will interfere with the test.

6.0 APPARATUS AND MATERIALS

6.1 Dissolved oxygen meter, YSI Model 54 or 57, or equivalent.
6.2 Dissolved oxygen probe with integral stirrer, YSI 5720A BOD bottle probe, or equivalent.
6.3 BOD bottles, 300-mL with ground-glass stoppers and flared mouths.
6.4 Incubator, 20° ± 1°C.
6.5 Pipets, with enlarged tips to allow passage of particles present in the samples.
6.6 Carboy, 20-L, with spigot, Nalgene or equivalent.

SDMS DocID 25650

7.0 SAFETY AND CHEMICAL HYGIENE

The toxicity or carcinogenicity of each reagent used in this method has not been precisely defined; however, each chemical compound should be treated as a potential health hazard, and exposure to these chemicals must be reduced to the lowest possible level by whatever means available. The laboratory maintains a reference file of material safety data sheets for the chemicals specified in this method. Additional information on general laboratory safety is available in the Laboratory Safety Plan and from the Laboratory Safety Officer.

8.0 REAGENTS

8.1 Reagents for dilution water.

8.1.1 Reagent water: Deionized or distilled water that has less than 0.01 mg/L copper and is free of chlorine, chloramines, caustic alkalinity, and organic matter.
8.1.2 Phosphate buffer, pH 7.2: Dissolve 8.50 g of potassium dihydrogen phosphate (KH_2PO_4), 21.75 g of potassium hydrogen phosphate (K_2HPO_4), 33.40 g of sodium hydrogen phosphate ($Na_2HPO_4 \cdot 7H_2O$), and 1.70 g of ammonium chloride (NH_4Cl) in 500 mL reagent water and dilute to 1 L; or use the Ricca reagent, catalog No. 5800.
8.1.3 Magnesium sulfate solution: Dissolve 22.5 g $MgSO_4 \cdot 7H_2O$ in reagent water and dilute to 1000 mL; or use the Ricca reagent, catalog No. 4530.
8.1.4 Calcium chloride solution: Dissolve 27.5 g anhydrous $CaCl_2$ in reagent water and dilute to 1000 mL; or use the Ricca reagent, catalog No. 1720.
8.1.5 Ferric chloride solution: Dissolve 0.25 g $FeCl_3 \cdot 6H_2O$ in reagent water and dilute to 1000 mL; or use the Ricca reagent, catalog No. 3100.
8.1.6 Prepared nutrient ingredients, such as Hach nutrient buffer pillows, Catalog No. 14862-98 for 6 L, or equivalent.

8.2 Seeding material.

8.2.1 POLYSEED from Polybac Corporation, a commercial freeze- dried BOD seed. Rehydrate by adding contents of one POLYSEED capsule to 500 mL of dilution water at 20°± 1°C and stirring for 60 min. Discard after 24 hr. Two milliliters of this seed per sample has been found to give satisfactory results.

8.3 Reagents for sample pretreatment.

8.3.1 Sodium hydroxide solution, 1 N: Dissolve 40 g NaOH in reagent water and dilute to 1000 mL.
8.3.2 Sulfuric acid solution, 1 N: Carefully add 28 mL conc. H_2SO_4 to 500 mL reagent water and dilute to 1000 mL.
8.3.3 Sodium sulfite solution, 0.025 N: Dissolve 1.575 g Na_2SO_3 in reagent water and dilute to 1000 mL. Prepare fresh daily when needed.

8.4 Glucose-glutamic acid solution: Dissolve 150 mg each of ACS-grade glucose ($C_6H_{12}O_6$) and glutamic acid ($C_5H_9NO_4$) in reagent water and dilute to 1 L. Prepare fresh approximately every six weeks or if a significate change is detected for the laboratory control sample (LCS). Both solids should be dried for 1 hr at 103°C.
8.5 Reagent for carbonaceous BOD:

8.5.1 2-Chloro-6-(trichloromethyl)pyridine (N-Serve): Available plated on an inert salt from Hach Company as Formula-2533 nitrification inhibitor.

8.5.2 Inhibitor solution: Add 0.133 g of 2-chloro-6-(trichloromethyl) pyridine or 6.4 g of Formula-2533 to 400 mL of deionized water. Some undissolved inert salt may remain in solution if Formula-2533 is used.

9.0 PROCEDURE

9.1 Preparation of dilution water.

9.1.1 Store reagent water to be used to prepare the dilution water in a cotton-plugged bottle long enough to become saturated with atmospheric oxygen, or aerate with air that has been filtered to remove any oil from the compressor.
9.1.2 To the desired quantity of water add per liter 1 mL each of the phosphate buffer, magnesium sulfate, calcium chloride, and ferric chloride solutions. Alternately, use a commercial buffer-nutrient preparation.
9.1.3 Prepare fresh dilution water every five days.

9.2 Sample pretreatment.

9.2.1 Dechlorination: If residual chlorine is present, add the amount of 0.025 N sodium sulfite solution determined by the procedure in Part 5000, Method 5210B, Section 4, Subsection e-2 (APHA 1992) to the sample.
9.2.2 pH adjustment: If the sample pH is outside the range of 6.5 - 8, neutralize to approximately 7 with 1 N H_2SO_4 or 1 N NaOH.
9.2.3 Supersaturation: Samples containing more than 9 mg/L of dissolved oxygen at 20°C are supersaturated and must be deoxygenated before being used to determine BOD. To reduce oxygen content, partially fill a bottle with sample and shake vigorously.

9.3 Sample preparation and seeding.

9.3.1 Select three or four dilutions bracketing the expected BOD value (Table 1). Sample dilutions less than 1:100 can be prepared directly in the BOD bottle. Sample dilutions greater than 1:100 must be prepared from an intermediate dilution, which can be done in a graduated cylinder. Use larger dilutions when determining ultimate BOD because of the longer incubation time.
9.3.2 If seeding is required, add 2 mL of POLYSEED solution or an appropriate volume of other seeding material that will give a depletion of 0.6-1.0 mg/L due to the seed.

NOTE: Domestic wastewater, unchlorinated or otherwise-disinfected effluents from biological waste treatment plants, and surface waters receiving wastewater discharges contain satisfactory microbial populations, and do not require seeding. Some untreated industrial wastes, disinfected wastes, high-temperature wastes, or wastes with extreme pH values do not contain sufficient microbial population, and require seeding.

9.3.3 Add the appropriate volume of well-mixed sample or sample dilution to the bottle.
9.3.4 Fill with dilution water to within ½-1 inch of the top of the bottle neck.
9.3.5 Stopper the bottle, being careful not to trap any air bubbles. With a finger on the stopper, invert several times to mix. Measure the initial dissolved oxygen as described in Section 9.4.
9.3.6 For each batch of samples:

9.3.6.1 Prepare a dilution water blank by filling a BOD bottle with dilution water; no seed is added.
9.3.6.2 Prepare a seed control by adding 25 mL of seed to a BOD bottle and diluting to volume with dilution water.

(The seed control requires at least ten times the volume of seed used for the samples.)
9.3.6.3 Prepare a laboratory control sample by adding 6 mL of glucose-glutamic acid solution and the volume of seed used for the samples to a BOD bottle and diluting to volume with dilution water.

9.4 BOD determination.

9.4.1 Calibrate the dissolved oxygen probe according to method EAL-M-360.2 (Dissolved Oxygen, Membrane Electrode) using the Winkler titration procedure.
9.4.2 After the probe has been calibrated, measure the initial dissolved oxygen of the samples, blanks, and QC sample. Remove the stopper from the bottle, insert the probe, and read the dissolved oxygen.
9.4.3 Restopper the bottle and add enough dilution water to cover the lip of the bottle to make a water seal. Cover the bottle with a cap to prevent water loss.

9.4.4 Incubate the bottles at 20 ± 1°C for five days, counting the preparation day as zero. If an ultimate BOD determination is required, incubate the samples for 20 days.
9.4.5 On the fifth day, or 20th day for ultimate BOD, recalibrate the oxygen probe and measure the final dissolved oxygen in each of the bottles.
9.4.6 Calculate the BOD using the formulas in Section 10.0. **Only those dilutions showing a residual dissolved oxygen of at least 1 mg/L and a depletion of at least 2 mg/L are used in the calculation.** Dilutions with depletions around 5 mg/L are the most reliable. (As an alternative, use the graphical method given in Appendix A.)

9.5 Carbonaceous BOD determination.

9.5.1 Follow the procedure in Steps 9.3 and 9.4, except add 3.33 mg of 2-chloro-6-(trichloromethyl)pyridine or 160 mg of Formula-2533 (8.5.1) to each bottle after adding the sample, or pipet 10 mL of inhibitor solution (8.5.2) to each BOD bottle.
9.5.2 Prepare a carbonaceous BOD seed control sample and a quality control sample each containing the required amount of inhibitor. For carbonaceous BOD calculations use the carbonaceous seed control result for the seed correction factor.

9.6 BOD determination for solid samples.

9.6.1 Weigh an appropriate amount (0.5 to 5.0 g) of the as-received solid sample directly into a BOD bottle. Prepare several different weights of each sample.
9.6.2 Add seed solution, if required, and fill the bottle with dilution water; proceed from Step 9.3.4.

10.0 CALCULATIONS

10.1 *Calculate the seed correction factor, S, if required:*

$$S\ (mg/L) = \frac{V_{ss}}{V_{sc}} (DO_i - DO_f)$$

where: V_{ss} = volume of seed added to sample (mL)
V_{sc} = volume of seed added to seed control (mL)

DO_f = final dissolved oxygen of seed control (mg/L)
DO_i = initial dissolved oxygen of seed control (mg/L)

Site: Centredale
Break: 3-4
Other: 25

10.2 Liquid samples.

10.2.1 Calculate the BOD for each dilution that has a depletion of at least 2 mg/L and a final dissolved oxygen of at least 1 mg/L:

$$BOD\ (mg\ O_2/L) = (DO_i - DO_f - S)\ DF$$

where: DO_i = initial dissolved oxygen of prepared sample (mg/L)
DO_f = final dissolved oxygen of prepared sample (mg/L)
S = seed correction factor (mg/L)
DF = dilution factor = $300/V_s$
V_s = volume of sample used (mL)

10.2.2 If the BODs calculated from several dilutions agree within 30%, report the average value. If they do not agree, do not average; the data must be investigated and a best value selected. The dilution with a depletion around 5 mg/L should produce the best result. A high dilution water blank will cause a wide variation among the dilutions, the BOD value increasing as the volume of sample decreases (see Appendix B).
10.2.3 If none of the dilutions has a depletion of at least 2 mg/L, report the sample BOD as 'less than' using the following:

$$BOD\ (mg\ O_2/L) = <(2.0\ DF)$$

where DF = the dilution factor of the smallest dilution (largest sample volume).

10.2.4 If none of the dilutions has a final dissolved oxygen of at least 1 mg/L, report the sample BOD as 'greater than' using the following:

$$BOD\ (mg\ O_2/L) = >[(DO_i - 1)\ DF]$$

where: DO_i = the initial DO
DF = the dilution factor of the largest dilution (smallest sample volume).

10.3 Solid samples: Calculate the BOD for each weight of sample taken that has a depletion of at least 2 mg/L and a final dissolved oxygen of at least 1 mg/L:

$$BOD\ (mg\ O_2/kg) = (DO_i - DO_f - S)\ \frac{300}{W}$$

where: DO_i = initial dissolved oxygen of prepared sample (mg/L)
DO_f = final dissolved oxygen of prepared sample (mg/L)
S = seed correction factor (mg/L)
W = weight of sample used (g)

Use the same 30% agreement criteria given above (10.2.2) for liquid samples. If none of the prepared samples meets the minimum depletion or final DO criteria, report as described for liquid samples in 10.2.3 or 10.2.4, using 300/W for the dilution factor.

11.0 QUALITY CONTROL

11.1 Glucose-glutamic acid sample: The BOD should be 200 ± 37 mg/L. If the value is not within these limits, the sample results are flagged as estimated due to failure of the control sample. If the results are low, the possible causes include a week seed, toxics in the dilution water or on the glassware, low incubator temperature, and improperly prepared or "old" standard material. If the results are high, the possible causes include contamination in the buffers or reagent water or on the glassware, high incubator temperature, and improperly prepared standard material.
11.2 Dilution water blank: The DO change of the blank should be less than 0.2 mg/L. If the blank exceeds the criteria, special calculations are necessary to compensate for the blank (Appendix B). These calculations are not part of the approved methods but allow salvaging the data. The sample results are flagged to note the departure from the approved method. A blank value greater than 0.2 mg/L can result from contaminated reagent water or buffer solution or from dirty glassware.
11.3 Incubator temperature: The temperature of the BOD incubator must be controlled to 20° ± 1°C and must be recorded for each day that the incubator is used.

12.0 OPERATING NOTES

12.1 Although the dilution water blank should have a DO change of less than 0.2 mg/L, it is possible to correct for the dilution water in order to salvage the sample data and estimated values for the BODs. Standard Methods does not give a formula for a dilution water blank; however, one can be derived. See the Appendix B for the procedure for the dilution water correction.
12.2 Glassware used in determining BOD must be scrupulously clean. Traces of organic matter in the bottles can add to the measured BOD. Hot sudsy water should be used to wash BOD glassware. Great care must be taken to remove the residue of the detergent by rinsing thoroughly with tap and deionized water. High residue concentration will cause low BOD results because of the bacteriostatic properties of detergents. Low concentrations of detergents can increase the BOD because the detergents are biodegradable.

13.0 REFERENCES

13.1 American Public Health Association, American Water Works Association, Water Pollution Control Federation. 1992. Method 5210 - 5-Day BOD Test, in Standard Methods for the Examination of Water and Wastewater, 18th edition. APHA, Washington, D.C.
13.2 Caruso, M. 1982. *Careful procedure needed in determining BOD.* Highlights, Water Pollution Control Federation 19(10):12-15.
13.3 Hach, C.C., R.L. Klein, Jr., and C.R. Gibbs. 1982. *Introduction to Biochemical Oxygen Demand.* Technical Information Booklet No. 7. Hach Company, Loveland, Colorado.
13.4 Plumb, R.H., Jr. 1981. Procedures for Handling and Chemical Analysis of Sediment and Water Samples. EPA/CE-81-1. Environmental Laboratory, U.S. Army Engineer Waterways Experiment Station, Vicksburg, Miss.
13.5 Sawyer, C.N. and P.L. McCarty. 1967. Chemistry for Sanitary Engineers, 2nd ed. McGraw-Hill, New York.
13.6 United States Environmental Protection Agency. 1979. Revised 1983. Method 405.1 - Biochemical oxygen

demand (5 day, 20 C), in Methods for Chemical Analysis of Water and Wastes. EPA-600/4-79-020. U.S. EPA, Cincinnati, Ohio.
13.7 Young, J.C., *Chemical Methods for Nitrification Control*, Federal Journal of Water Pollution Control, 45, p. 637 (1973).

TABLE 1. SAMPLE VOLUMES AND BOD RANGES

Sample Volume (mL)	BOD Range	Sample Type
300	2 -7	'Clean' Waters
200	3 -10	
100	6 -21	Polluted Surface Water
50	12 -42	
20	30 -105	
10	60 -210	Oxidized Effluents
5	120 -420	
2	300 -1,050	Raw and Settled Sewage
1	600 -2,100	
0.5	1,200 -4,200	
0.2**	3,000 -10,500	Strong Trade Wastes
0.1**	6,000 -21,000	
0.05**	12,000 -42,000	
0.02**	30,000 -105,000	

* - The low end of the BOD range was calculated from a minimum oxygen depletion of 2 mg/L; the high end by assuming an initial DO of 8 mg/L and a minimum final DO of 1 mg/L, giving an oxygen depletion of 7 mg/L.

** - Effective volume, resulting from intermediate dilutions:

0.2 mL - 10 mL of 1:50 dilution
0.1 mL - 5 mL of 1:50 dilution
0.05 mL - 5 mL of 1:100 dilution
0.02 mL - 2 mL of 1:100 dilution

APPENDIX A

GRAPHICAL CALCULATION OF BIOCHEMICAL OXYGEN DEMAND

APPENDIX A
GRAPHICAL CALCULATION OF BIOCHEMICAL OXYGEN DEMAND

A1.0 SUMMARY

Klein and Gibbs (1979) have shown that BOD can be calculated using a graphical method that has some substantial advantages over the traditional calculation method. The method involves plotting the final dissolved oxygen (DO) of the diluted samples versus the volume of sample diluted. This requires at least three dilutions and preferably four. The best straight line is fitted through the points. The slope and y—intercept of the line are needed to calculate the BOD. Least-squares regression can be used to fit the line and provide the parameters.

The graphical method of preparing and measuring BOD differs from the traditional method as follows:

1. the initial DOs of the diluted sample need not be measured;
2. the DO of the undiluted sample must be measured;
3. the seed and dilution water corrections are not needed in the calculations; and
4. all dilution are used, even if they do not meet the criteria for minimum depletion and final DO.

The BODs are calculated from the equation:

BOD = 300(-slope) – y—intercept + initial sample DO

The slope is the change in dissolved oxygen per mL of sample used; multiplying the slope by 300 gives the change in DO for an undiluted sample in a 300-mL bottle. The y—intercept is the final DO of a sample consisting of only the seed and dilution water.

A2.0 PROCEDURE

Measure the initial dissolved oxygen of the undiluted sample. Dilute and seed the sample as in the regular method, with a minimum of three dilutions. After the 5-day incubation measure the final DO of the diluted samples. Perform a linear regression on the data using the sample volumes for the x-values and the final DO for the y-values. Record the slope and y—intercept of the fitted line. Calculate the BOD using the formula:

BOD = 300(-slope) – y—intercept + initial sample DO

A3.0 EXAMPLE CALCULATION

The following data are used to illustrate these calculations.

SAMPLE	SAMPLE VOLUME	SEED VOLUME	INITIAL DO	FINAL DO	CALCULATED BOD
Dilution		0	8.50	7.55	-
Seed Control	20	-	8.50	3.60	-
EA 8963	50	2	7.90	1.70	34.3
	20	2	8.25	4.95	42.2
	10	2	8.35	6.00	55.8
	5	2	8.50	6.65	87.6

The calculated BOD column contains values calculated using the Standard Methods (APHA 1992) equation, without a dilution blank correction.

Performing a least-squares regression on the sample volumes and final DOs yielded the following values for the fitted line:

slope = -0.1090 y—intercept = 7.142

If the undiluted sample DO = 5.00 mg/L,

$$\begin{aligned} BOD &= 300(0.1090) - 7.142 + 5.00 \\ &= 32.70 - 2.142 \\ &= 30.56 \text{ mg/L} \end{aligned}$$

These data were generated using a BOD value of 30 mg/L.

A4.0 REFERENCES

A4.1 Hach, C.C., R.L. Klein, Jr., and C.R. Gibbs. 1982. *Introduction to Biochemical Oxygen Demand.* Technical Information Booklet No. 7. Hach Company, Loveland, Colorado.

A4.2 Klein, R.L., Jr. and C.R. Gibbs. 1979. *Graphical method for calculating biochemical oxygen demand.* Journal Water Pollution Control Federation 55:2257-2266.

APPENDIX B

CORRECTING FOR THE DILUTION WATER BLANK

APPENDIX B
CORRECTING FOR THE DILUTION WATER BLANK

B1.0 SUMMARY OF PROCEDURE

1.1 Standard Methods (APHA 1992) stipulates that the oxygen depletion of the dilution water blank must be less than 0.2 mg/L, preferably 0.1 mg/L, but provides no guidance on how to handle samples that have blanks with values outside this range. Because the value for the dilution water blank is only measured after five days, the samples are then pass the holding time. To make it possible to salvage such samples, formulas were derived that allow correcting for the dilution water blank. These formulas only apply when the high value for the blank is due to the dilution water and not to dirty bottles that might not affect all samples. The effect of a high blank will be evident when the BODs calculated from a series of dilutions of a sample do not agree, the BOD value increasing as the volume of sample decreases. The effect of the dilution water blank becomes more pronounced as the volume of sample used decreases.
1.2 Before the sample calculations are performed, a dilution water correction is applied to the seed correction factor, if seeding was used. For the samples a dilution water correction must be calculated for each dilution used. Then, the seed correction factor and the dilution water correction are subtracted from the oxygen depletion for each sample dilution.
1.3 Values calculated using these formulas must be flagged to indicate that the dilution water blank was out of control. The graphical method of calculation, given in Appendix A, automatically compensates for dilution water blanks.

B2.0 CALCULATIONS

B2.1 Calculate a correction factor for the dilution water blank, B, for each sample volume used:

$$B\ (mg/L) = (DO_i - DO_f)\frac{300 - V_s}{300}$$

where: DO_i = initial dissolved oxygen of dilution water blank (mg/L)
DO_f = final dissolved oxygen of dilution water blank (mg/L)
V_s = volume of sample diluted (mL)

B2.2 Calculate the blank-corrected seed correction factor, S:

$$S\ (mg/L) = \frac{V_{ss}}{V_{sc}}(DO_i - DO_f - B)$$

where: V_{ss} = volume of seed added to sample (mL)
V_{sc} = volume of seed added to seed control (mL)
DO_i = initial dissolved oxygen of seed control (mg/L)
DO_f = final dissolved oxygen of seed control (mg/L)
B = dilution water correction factor (mg/L), using V_{sc} for V_s in B2.1

B2.3 Calculate the blank-corrected sample BOD for each dilution:

$$BOD\ (mg\ O_2/L) = (DO_i - DO_f - S - B)\ DF$$

where: DO_i = initial dissolved oxygen of diluted sample (mg/L)
DO_f = final dissolved oxygen of diluted sample (mg/L)
S = blank-corrected seed correction factor (mg/L)
B = dilution water correction factor (mg/L), using $(V_{sam} + V_{ss})$ for V_s in B2.1
V_{sam} = volume of sample used (mL)
DF = sample dilution factor = $300/V_{sam}$

B2.4 To avoid having to calculate a dilution water correction factor for each dilution, use the alternate formula given below:

$$BOD\ (mg\ O_2/L) = (DO_i - DO_f - S)\ DF - \Delta DO_b\ (DF - 1)$$

where: DO_i = initial dissolved oxygen of diluted sample (mg/L)
DO_f = final dissolved oxygen of diluted sample (mg/L)
S = blank-corrected seed correction factor (mg/L)
DF = sample dilution factor = $300/V_{sam}$
ΔDO_b = change in dissolved oxygen of dilution water blank (mg/L)

B3.0 EXAMPLE CALCULATIONS

B3.1 The following data are used illustrate these calculations.

SAMPLE	SAMPLE VOLUME	SEED VOLUME	DO_i	DO_f	UNCORRECTED BOD	CORRECTED BOD
Dilution Water Blank	300	0	8.50	7.55	-	-
Seed Control	20	-	8.50	3.60	-	-
EA 8963	50	2	7.90	1.70	34.3	30.0
	20	2	8.25	4.95	42.2	30.2
	10	2	8.35	6.00	55.8	30.9
	5	2	8.50	6.65	87.6	30.9

The first column of BOD values are those calculated without correcting for the dilution water blank; those in the second were corrected for the blank. As can be seen, the error associated with the uncorrected values increases dramatically as the volume of sample decreases; this is because the dilution water oxygen demand becomes a greater part of the overall demand.

The BOD for the 10-mL dilution was calculated, without correcting for the dilution water blank, by using the formulas in Section 10.0:

$$S = (8.50 - 3.60)(2/20)$$
$$= (4.90)(0.10)$$
$$= 0.490\ mg/L$$

$$BOD = (8.35 - 6.00 - 0.490)(300/10)$$
$$= (1.86)(30)$$
$$= 55.8 \text{ mg/L}$$

The BOD for the same dilution was corrected for the dilution water blank by using the formulas in Section B2:

$$B(seed) = (8.50 - 7.55)(280/300)$$
$$= (0.95)(0.933)$$
$$= 0.886 \text{ mg/L}$$
$$S = (8.50 - 3.60 - 0.886)(2/20)$$
$$= (4.014)(0.10)$$
$$= 0.401 \text{ mg/L}$$

$$B(sample) = (8.50 - 7.55)(290/300)$$
$$= (0.95)(0.967)$$
$$= 0.919 \text{ mg/L}$$

$$BOD = (8.35 - 6.00 - 0.401 - 0.919)(300/10)$$
$$= (1.030)(30)$$
$$= 30.9 \text{ mg/L}$$

Using the alternate calculation (B2.4):

$$BOD = (8.35 - 6.00 - 0.401)(30) - (0.95)(30 - 1)$$
$$= (1.949)(30) - (0.95)(29)$$
$$= 58.47 - 27.55$$
$$= 30.9 \text{ mg/L}$$

CHESAPEAKE BIOLOGICAL LABORATORY (CBL) SOPs

Nutrient Analytical Services Laboratory

Standard Operating Procedures

Christopher F. D'Elia
Erin E. Connor
Nancy L. Kaumeyer
Carolyn W. Keefe
Kathryn V. Wood
Carl F. Zimmermann

Technical Report Series No. 158-97

Chesapeake Biological Laboratory
University of Maryland
Center for Environmental Science
Solomons, Maryland 20688-0038
410-326-7252

May, 1997

TABLE OF CONTENTS

INTRODUCTION 1

DISSOLVED INORGANIC ANALYTES 3

- Orthophosphate 7
- Ammonium 11
- Nitrite 14
- Nitrite + Nitrate 17
- Silicate 21
- Sulfate, Chloride and Nitrate 24

ORGANIC ANALYTES 27

- Total Dissolved Nitrogen and Phosphorus 29
- Total Phosphorus (Acid Persulfate) 35
- Kjeldahl Nitrogen 39
- Total and Dissolved Organic and Inorganic Carbon 43

PARTICULATE ANALYTES 48

- Particulate Carbon and Nitrogen 49
- Particulate Phosphorus 54
- Particulate Biogenic Silica 58
- Total Suspended Solids 62
- Chlorophyll *a* and Phaeopigments 64

FRESHWATER ANALYSES 67

- Hardness - EDTA Titrimetric Method 67
- Carbonate Alkalinity 69

LITERATURE CITED 70

APPENDIX A 71

APPENDIX B 72

ACKNOWLEDGEMENTS 77

LIST OF TABLES

Table 1. Parameters routinely analyzed at the Nutrient Analytical Services Laboratory at CBL 1

Table 2. Sampling and storage for organic analytes 27

Table 3. Minimum limits of detection of CBL, October/November 1987, March 1994 74

LIST OF FIGURES

Figure 1. Manifold assembly for orthophosphate method 7

Figure 2. Manifold assembly for ammonium method 11

Figure 3. Manifold assembly for nitrite method 14

Figure 4. Manifold assembly for nitrite + nitrate method 17

Figure 5. Manifold assembly for silicate method 21

Figure 6. Schematic of the Rainin Co. Inc./Dionex Hybrid Ion Chromatography System 24

Figure 7. Flow diagram of nitrogen analysis 27

Figure 8. Flow diagram of phosphorus analysis 28

Figure 9. Manifold assembly for total dissolved nitrogen method 29

Figure 10. Manifold assembly for total dissolved phosphorus method 30

Figure 11. Manifold assembly for total phosphorus (acid persulfate) method 35

Figure 12. Manifold assembly for Kjeldahl nitrogen method 39

Figure 13. Schematic diagram of the Exeter Analytical, Inc. (EAI) CE-440 Elemental Analyzer 49

Figure 14. Manifold assembly for particulate phosphorus method 54

Figure 15. Manifold assembly for particulate biogenic silica method 58

Figure 16. Percentage recovery of glutamic acid as an internal standard for total dissolved nitrogen digestion/analysis 76

Figure 17. Percentage recovery of glycerophosphate as an internal standard for total dissolved phosphorus digestion/analysis 77

INTRODUCTION

The following pages document the analytical methodologies performed by the Nutrient Analytical Services Laboratory at the University of Maryland Chesapeake Biological Laboratory (CBL). This manual includes sections on dissolved inorganic nutrients, dissolved organic nutrients and particulate nutrients. Within each of these sections, sample collection, storage, preparation and analysis are discussed. A final section addresses data management and quality assurance/quality control (QA/QC).

Many of the procedures discussed are used for the Maryland Mainstem portion of the Chesapeake Bay Program.

Instrumentation includes:

- Technicon AutoAnalyzer II,
- Two channel Technicon TrAAcs-800 Nutrient Analyzer,
- OI Analytical Model 700 TOC Analyzer,
- Shimadzu TOC-5000 Total Organic Carbon Analyzer,
- Turner Designs TD-700 Fluorometer,
- Sequoia Turner Fluorometer Model 112,
- Shimadzu UV-120-02 Spectrophotometer,
- Exeter Analytical, Inc. CE-440 Elemental Analyzer, and
- Rainin Co. Inc./Dionex hybrid Ion Chromatograph.

Gateway 2000 Pentium microcomputers with complete spreadsheet packages are used heavily in data reduction and management.

High quality (18.3 megohm-cm) water is provided via a Barnstead NANOpure II system. The Barnstead system produces Type 1 Reagent Grade water equal to or exceeding standards established by the American Society for Testing and Materials. First, water is filtered through a reverse osmosis membrane. Final product water then passes through a series of five filters: one organic colloid, two mixed bed, one organic free, and one final 0.2 µm filter. Throughout this report, the term "deionized water" refers to 18.3 megohm-cm water and "frozen" refers to temperature < -20°C.

Table 1. Parameters routinely analyzed at the Nutrient Analytical Services Laboratory at CBL

DISSOLVED INORGANIC	ORGANIC	PARTICULATE
Ammonium-Nitrogen	Acid Persulfate Phosphorus	Carbon
Nitrite-Nitrogen	Persulfate Nitrogen	Nitrogen
Nitrite+Nitrate-Nitrogen	Persulfate Phosphorus	Phosphorus
Phosphate-Phosphorus	Dissolved Carbon	Total Suspended Solids
Silicate		Biogenic Silica
Sulfate		Chlorophyll *a*
Chloride		Phaeopigments
Nitrate-Nitrogen		

Sample Data Reduction Process

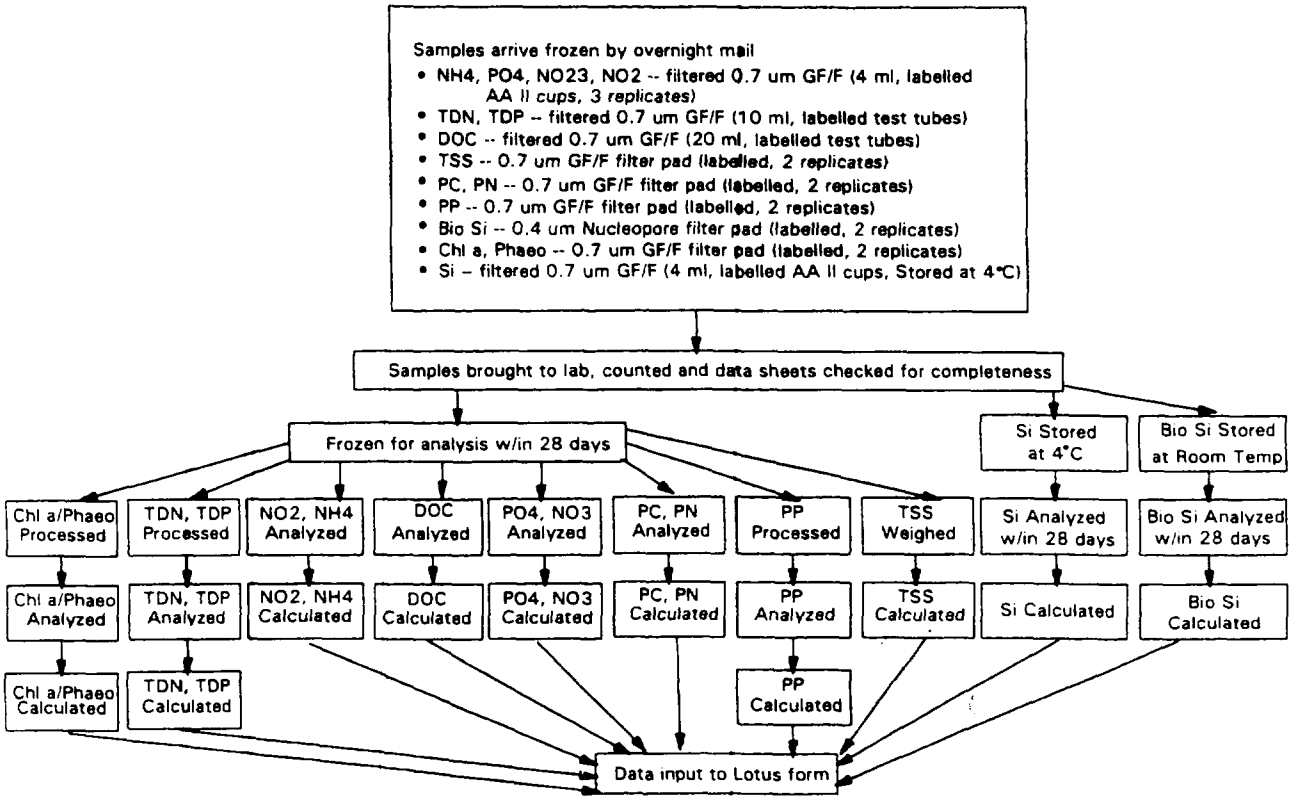

DISSOLVED INORGANIC ANALYTES

Instrumentation

All of the dissolved inorganic nutrient procedures, particulate phosphorus and biogenic silica procedures require the use of a segmented continuous flow analyzer such as the Technicon AutoAnalyzer II where samples and reagents are continuously added in a specific sequence along a path of glass tubing and mixing coils. Within the system of tubes, air bubbles injected at precise intervals sweep the walls of the tubing and prevent diffusion between successive samples. Reactions in the AutoAnalyzer do not develop to completion as in manual methods, but reach identical stages of development within each sample since every sample follows the same path, timing and exposure to specific reagents.

The basic function of each component of the segmented continuous flow analyzer is discussed briefly below. This explanation is similar to that of Sanborn and Larrance (1972).

Automatic Sampler

At a timed interval, the sampler probe alternately draws fluid from a tray of discrete samples and a wash fluid receptacle. After each sample is drawn, the sample tray advances to the next sample position. A bubble of air, which acts as a diffusion barrier, is aspirated into the sample stream between sample and wash. The ratio of sample-to-wash time and the number of samples analyzed per hour are controlled by a cam located in the top well of the sampler assembly. Cams are changed easily and are available for various sampling rates.

The wash solution separates successive samples in the sample stream as indicated on the graphical record by alternating minima (wash) and maxima (sample). The sample probe is connected to a stream divider that delivers identical samples simultaneously to each manifold via the pump.

Proportioning Pump

The proportioning pump is a peristaltic-type pump that continuously delivers air, reagents and samples to the manifold. Plastic pump tubes of various diameters are pressed between a series of moving rollers and a platen. The motion of the rollers along the tubes delivers a continuous flow of samples and reagents. The delivery rate is determined by the inside diameter of the tubes since the rollers move at a constant rate. These pump tubes are available in a large assortment of delivery rates. The pump holds a maximum of 28 tubes and has an air bar that mechanically measures and injects identically sized air bubbles into the analytical stream. The pump tubes delivering reagents, air and samples are connected to appropriate manifolds.

Manifold

Each analysis requires a manifold specifically designed for the chemical determination employed. The manifolds are composed of a series of horizontal glass coils, injection fittings and heating baths arranged for the proper sequence of reactions leading to color development. The glass coils permit mixing of the sample and the reagents; as two solutions with different densities travel around each turn of the mixing coil, the denser solution falls through the less dense one, causing mixing and creation of a homogenous mixture of the

two solutions. The length of the coil determines the amount of time allowed for chemical reaction between the addition of successive reagents. Injection fittings for each of the reagents are placed between mixing coils; thus, a sample enters one end of the manifold, a reagent is added, and then another reagent is added and mixed. After the addition of all reagents, and an adequate reaction time, the solution flows into a colorimeter.

Colorimeter

The colorimeter measures the absorption of monochromatic light by the solution in the flow cell. Light from a single source passes through two separate but identical interference filters that pass light within a narrow spectral band. The light then passes through the appropriate flow cell and is projected onto a phototube. The phototube generates an electrical signal in response to the intensity of the impinging light. The output from each phototube is a measure of transmittance and is converted electronically by the colorimeter to a signal proportional to absorbance. The relationship between transmittance and absorbance is given by the equation $A = \log 1/T$; where A = absorbance and T = transmittance. The resulting signal is linear in absorbance and directly proportional to concentration. As each sample passes through the flow cell, the signals are sent to a recorder.

Recorder

Results of the analyses are continuously recorded by strip chart recorders or by computer using an IBM compatible DP500 software system by Labtronics Inc. Each recorder can simultaneously monitor two separate analyses and the DP500 system can collect and analyze data from up to four different detectors simultaneously. The output of the colorimeter is proportional to absorbance and standards of known concentration must be analyzed to relate absorbance to concentration. The analog signals can be converted to absorbance values by referring to the Technicon reference curve and the standard calibration control.

Sampling and Storage

Collected water samples are filtered through Whatman GF/F filters (nominal pore size 0.7 μm), placed in either polypropylene bottles or directly into 4 ml AutoAnalyzer cups and frozen. Samples for silicate are treated in the same manner but are refrigerated at 4°C. All samples are analyzed within 28 days.

Operating Procedures

The following describes step-by-step operating procedures for the AutoAnalyzer II system.

1. *Colorimeter* - Turn power on and allow 10 minutes for warm-up. Set standard calibration setting for desired determination.

2. *Recorder (or Computer)* - Turn power on and allow 10 minutes for recorder warm-up. Check recorder paper supply. If using computer for data collection, load software and select appropriate sample method and sample table. Refer to Labtronics Inc. DP500 users manual for a description of system operation.

3. *Sampler Water Reservoirs* - Check and fill the deionized water reservoirs.

4. *Pump* - Connect pump tubes and attach platen to pump. Start pump with deionized water flowing through the system. Check for leaks in tubes at connections and for a regular bubble pattern in the manifold.

5. *Recorder* - Start recorder. Paper should begin to move.

6. *Colorimeter* - Check ZERO and FULL SCALE knob. ZERO simulates a zero output so that ZERO adjustment (screwdriver) of the recorder can be made. Set knob to NORMAL and establish a baseline with deionized water using the BASELINE CONTROL adjustment knob and a standard calibration (STD CAL) setting of 1.0.

7. Allow reagents to pump through the system and note any rise in baseline and readjust the baseline to zero. Refer to this rise as the REAGENT BLANK (at a STD CAL of 1.0).

8. An extremely wide range of nutrient concentrations found in Chesapeake Bay waters, both temporally and spatially, requires use of a standard curve covering a large range and that covers a few STD CAL control settings.

9. Reset zero baseline at the STD CAL control setting normally used for that determination (e.g., particulate phosphorus STD CAL of 4.0). Next, switch the STD CAL setting to 1.0. There should be no deflection of the pen at zero baseline. Note peak heights of standards at the various STD CAL settings along with the STD CAL settings. This allows the operator to use STD CAL settings in the range of 1 to 4 (for this example) in analyzing standards and samples that otherwise would have gone off scale. Intersperse standards in the run after approximately every 20 samples, including a standard analyzed at each STD CAL setting employed during the preceding 40 samples. A visual comparison with the day's initial standard curve should indicate no greater variance than 5% of the peak height (e.g., initial standard peak height 60.0; subsequent standards acceptable in the range of 57.0 to 63.0). If the variance exceeds 5%, identify the source of the problem, correct and re-analyze affected samples. Adjust baseline after approximately every 20 samples. If an adjustment of more than 1 unit is required, identify the source of the problem, correct and re-analyze affected samples.

10. At completion of the run, remove lines from reagents and place tubes in deionized water.

11. *Shut-down* - Turn off recorder. Wash system with 1 N hydrochloric acid for 15 minutes, followed by a 15 minute wash with deionized water. Turn off pump, release proportioning platen and loosen pump tubes. Turn off colorimeter.

Glassware

Glassware for all determinations are acid-washed with 10% hydrochloric acid followed by numerous rinses with deionized water.

Calibration and Standardization

Please refer to each specific determination for the appropriate STD CAL control setting and for the standard concentrations used.

The STD CAL control setting located on the colorimeter allows the operator to adjust the electrical output to the concentration range of the samples. Extremely low values (µg/l) require high STD CAL settings (high sensitivity) whereas high values (mg/l) require lower STD CAL settings (lower sensitivity).

Concentrations of nutrients are calculated from the linear regression of the standard concentration (independent variable) against the corresponding peak height (dependent variable). All standards analyzed at a particular STD CAL setting are included in the regression for that set of calculations. Only samples whose peak heights were measured at that individual STD CAL setting are calculated from that regression. If a broad range of sample concentrations requires that more than one STD CAL setting be used throughout the course of a run, then a separate regression must be employed for each STD CAL setting. For example, peak heights obtained from standards read at STD CAL 9.0 are used to obtain the linear regression for calculating only the concentrations of samples whose peak heights were read at STD CAL 9.0. Likewise, peak heights obtained from standards read at STD CAL 2.0 are used to obtain the linear regression for calculating only the concentrations of samples whose peak heights were read at STD CAL 2.0.

Peak heights are read manually from the strip chart or automatically by the DP500 software system, depending on the AutoAnalyzer II system used. Operator vigilance is necessary throughout the run to ensure that all peaks indicate steady state conditions for the reaction for each sample. If steady state conditions are not obtained, the samples are re-analyzed.

Stock standards are prepared with primary standard grade chemicals of each nutrient in deionized water. As a general rule, stock solutions should be made every 6 months and the preparation date logged. Secondary standards, where appropriate, are prepared with deionized water. Working standards are prepared daily with deionized water or the appropriate matrix as described by the specific determination method and should encompass the range of the samples.

All analysis documents are kept in bound notebooks and the carbon copy is given to the investigator or granting agency. Information provided includes:

- name of the method;
- collection date;
- source of samples;
- analyst;
- analysis date;
- sample number;
- sample concentration;
- results of duplicate analyses; and
- results of spike analyses.

ORTHOPHOSPHATE

Revised 1/97

Ammonium molybdate and antimony potassium tartrate react in an acid medium with dilute solutions of phosphorus to form an antimony-phospho-molybdate complex which is reduced to an intensely blue-colored complex by ascorbic acid. Color is proportional to phosphorus concentration.

Methodology

Technicon Industrial Method No. 155-71W/Tentative. 1973. Technicon Industrial Systems. Tarrytown, New York, 10591.

USEPA. 1979. Method No. 365.1 *in* Methods for chemical analysis of water and wastes. United States Environmental Protection Agency, Office of Research and Development. Cincinnati, Ohio. Report No. EPA-600/4-79-020 March 1979. 460pp.

Froelich, P.N. and M.E.Q. Pilson. 1978. Systematic absorbance error with Technicon AutoAnalyzer II colorimeter. Water Res. 12:599-603.

Instrumentation

Technicon AutoAnalyzer II

Manifold Assembly

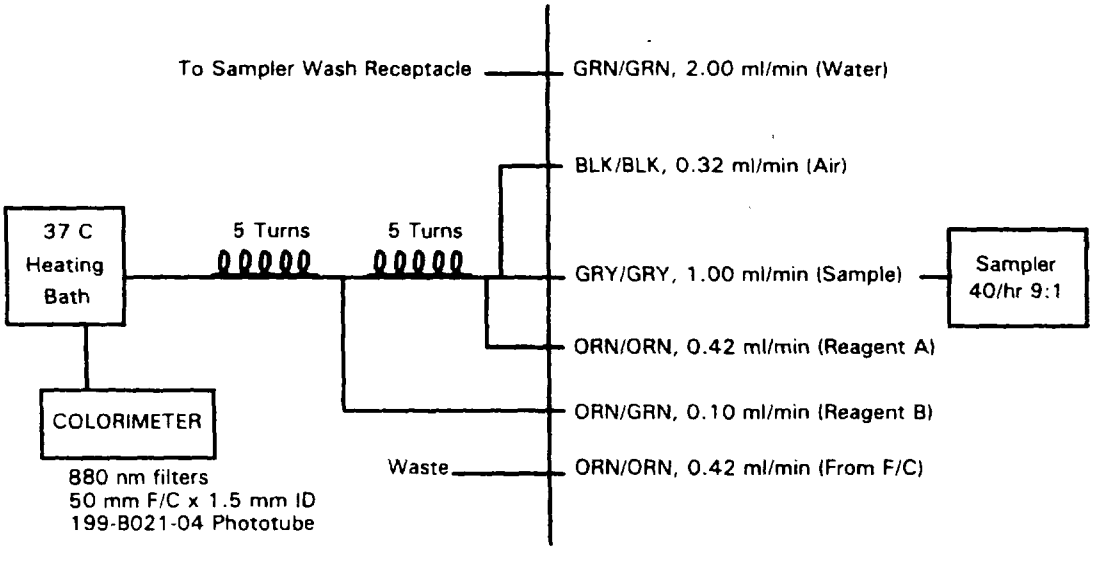

Figure 1. Manifold assembly for orthophosphate method.

Specifications

Standard Calibration Settings: 9.0, 6.0, 2.0, 1.0
Damp: Normal
Sampling Rate: 40/hour, 9:1 sample/wash ratio
Filter: 880 nm
Phototube: 199-B021-04
Flowcell: 50 mm
Relative Absorbance (12 μM P): ~.80

Interferences: Silicon at a level of 100 µM Si causes an interference equivalent to approximately 0.04 µM P. High iron may cause precipitation (i.e., loss) of phosphorus. High sample turbidity and color may interfere.

Reagents

Sulfuric Acid Solution, 4.9 N

Sulfuric acid (H_2SO_4), concentrated (sp. gr. 1.84)	136 ml
Deionized water, q.s.	1000 ml

To a 1000 ml volumetric flask, add 136 ml of concentrated sulfuric acid to approximately 800 ml of deionized water while cooling (cold water bath). After the solution is cooled, dilute to 1000 ml with deionized water.

Ammonium Molybdate Solution

Ammonium molybdate [$(NH_4)_6Mo_7O_{24}\cdot 4\ H_2O$]	40 g
Deionized water	1000 ml

In a 1000 ml volumetric flask, dissolve 40 g of ammonium molybdate in 800 ml of deionized water. Dilute to 1000 ml with deionized water. Store in plastic bottle away from direct sunlight.

Ascorbic Acid Solution

Ascorbic acid ($C_6H_8O_6$)	18 g
Deionized water	1000 ml

In a 1000 ml volumetric flask, dissolve 18 g of ascorbic acid in 800 ml of deionized water. Dilute to 1000 ml with deionized water and dispense ~40 ml aliquots into clean polybottles and freeze. Thaw overnight in the refrigerator before use.

Antimony Potassium Tartrate Solution

Antimony potassium tartrate [$K(SbO)C_4H_4O_6\cdot ½\ H_2O$]	3 g
Deionized water	1000 ml

In a 1000 ml volumetric flask, dissolve 3 g of antimony potassium tartrate in 800 ml deionized water. Dilute to 1000 ml with deionized water.

Working Reagents

Reagent A

Deionized water	64 ml
Sulfuric Acid Solution, 4.9 N	50 ml
Ammonium Molybdate Solution	15 ml
Antimony Potassium Tartrate Solution	5 ml
Sodium dodecyl sulfate, (SDS) [$CH_3(CH_2)_{11}OSO_3Na$; m.w. 288.38; phosphate ≤0.0001%]	0.15 g

Reagent B

Ascorbic Acid Solution	30 ml
SDS	0.05 g

Standards

Stock Orthophosphate Standard, 12,000 µM

Potassium phosphate, monobasic (KH_2PO_4), dried at 45°C	1.632 g
Deionized water	1000 ml
Chloroform ($CHCl_3$)	1 ml

In a 1000 ml volumetric flask, dissolve 1.632 g of potassium phosphate in ~800 ml deionized water. Dilute to 1000 ml with deionized water then add 1 ml of chloroform as a preservative (1 ml contains 12 µmoles P).

Secondary Orthophosphate Standard

Stock Orthophosphate Standard	1 ml
Deionized water, q.s.	100 ml

In a 100 ml volumetric flask, dilute 1 ml of Stock Orthophosphate Standard to 100 ml with deionized water (1 ml contains 0.12 µmoles P).

Working Orthophosphate Standards

Dilute 0.1, 0.25, 0.5, 1.0, 1.25, 2.5, 5 and 10 ml of Secondary Orthophosphate Standard to 100 ml with deionized water to yield concentrations of 0.12 µM P (0.00372 mg/l), 0.3 µM P (0.0093 mg/l), 0.6 µM P (0.0186 mg/l), 1.2 µM P (0.0372 mg/l), 1.5 µM P (0.0465 mg/l), 3.0 µM P (0.093 mg/l), 6.0 µM P (0.186 mg/l) and 12.0 µM P (0.372 mg/l), respectively.

Refractive Index Correction

Working Reagents

Refractive Reagent A

Sulfuric Acid Solution, 4.9 N	50 ml
Deionized water	84 ml
SDS	0.15 g

Refractive Reagent B

Ascorbic Acid Solution	30 ml
SDS	0.05 g

Procedure

1. Obtain peak heights for all samples and standards with Refractive Reagent A and Reagent B in place of the Reagent A and Reagent B of the orthophosphate determination. Peak heights for the refractive index correction must be obtained at the same STD CAL setting and on the same colorimeter as the corresponding samples and standards.

2. Subtract the refractive index peak heights from the heights obtained for the orthophosphate determination.

3. Calculate the regression equation using the corrected standard peak heights.

4. Calculate the concentration of samples from the regression equation using the corrected sample peak heights.

When a large data set has been amassed in which each sample's salinity is known, a regression for the refractive index correction on the colorimeter can be calculated. For each sample, the apparent orthophosphate concentration due to refractive index is calculated from its peak height obtained with Refractive Reagent A and Reagent B, and the regression of orthophosphate standards obtained with orthophosphate Reagent A and Reagent B. The salinity is entered as the independent variable and its apparent orthophosphate concentration due to its refractive index in that colorimeter is entered as the dependent variable. The resulting regression allows the operator to subtract an apparent orthophosphate concentration when the salinity is known, as long as other matrix effects are not present; thus, the operator is not required to obtain the refractive index peak heights for all samples when a large data set has been found to yield consistent orthophosphate concentrations due to salinity.

AMMONIUM

Revised 1/97

Determination of ammonium is by the Berthelot Reaction in which a blue-colored compound similar to indophenol forms when a solution of ammonium salt is added to sodium phenoxide, followed by the addition of sodium hypochlorite. The addition of a potassium sodium tartrate and sodium citrate solution prevents precipitation of hydroxides of calcium and magnesium.

Methodology

Technicon Industrial Method No. 804-86T. August 1986. Technicon Industrial Systems. Tarrytown, New York, 10591.

Instrumentation

Technicon TrAAcs-800 Nutrient Analyzer

Manifold Assembly

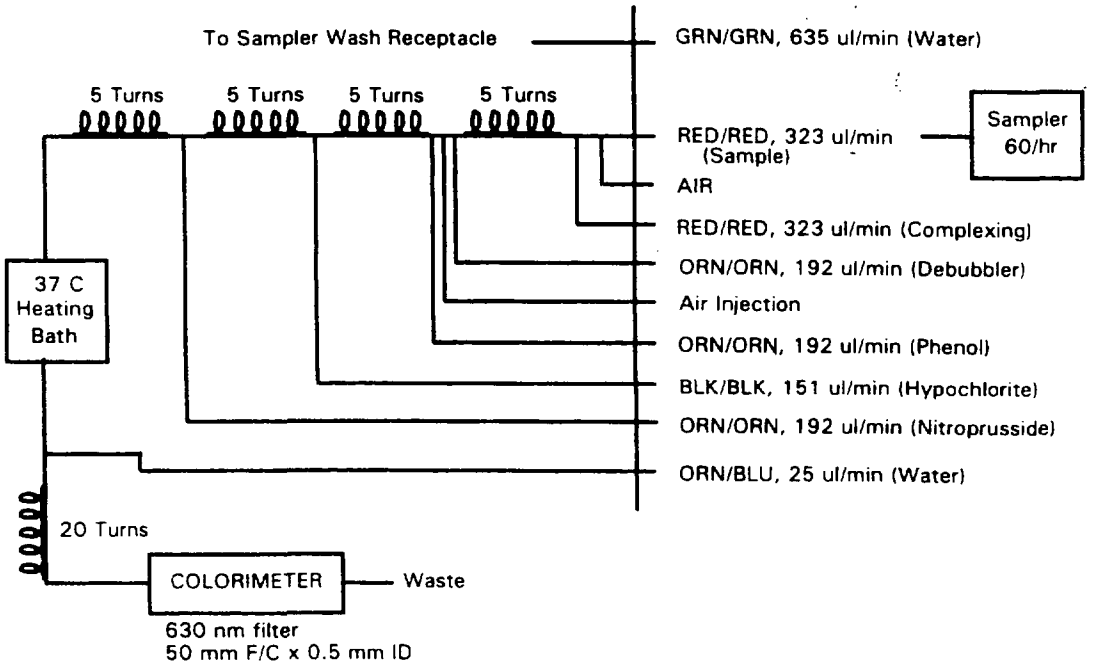

Figure 2. Manifold assembly for ammonium method.

Specifications

Gain: 40 - 45
Baseline: 32 - 38
Sampling Rate: 60/hour
Filter: 630 nm
Flowcell: 50 mm
Relative Absorbance (12 µM N): 0.22 - 0.24

Contamination: Ammonium determination is highly susceptible to skin and atmospheric contamination (Kérouel and Aminot 1987).

Reagents

Complexing Reagent

Sodium potassium tartrate ($KNaC_4H_4O_6 \cdot 4\ H_2O$)	39 g
Sodium citrate [$HOC(COONa)(CH_2OONa)_2 \cdot 2\ H_2O$]	28 g
Sulfuric acid (H_2SO_4), concentrated (sp. gr. 1.84)	as required
Deionized water	1000 ml
Brij-35 (Bran + Luebbe No. T21-0100-06), 30%	1 ml

In a 1000 ml beaker, dissolve 39 g of potassium sodium tartrate and 28 g of sodium citrate in 950 ml of deionized water. Adjust the pH of the solution to 5.0 using concentrated sulfuric acid. Dilute to 1000 ml with deionized water in a volumetric flask. Add 1 ml of 30% Brij-35 and mix thoroughly. Store in a light resistant container and refrigerate. Make fresh weekly.

Alkaline Phenol Reagent

Phenol (C_6H_5OH), 88%	23.6 ml
Sodium hydroxide (NaOH), 50%	18 g
Deionized water, q.s.	250 ml

In a 250 ml volumetric flask, slowly add 23.6 ml of 88% phenol to ~150 ml of deionized water. Weigh out exactly 18 g of 50% sodium hydroxide, then while in an ice bath, slowly add the sodium hydroxide to the phenol/water solution. Dilute to 250 ml with deionized water. Store in a light resistant glass container and refrigerate. Make fresh weekly.

WARNING: Phenol is extremely dangerous and should be handled accordingly. Prepare reagent fresh weekly under a fume hood and wearing protective gloves.

Sodium Hypochlorite, 1%

Sodium hypochlorite (CLOROX)	50 ml
Deionized water	200 ml

In a 250 ml volumetric flask, dilute 50 ml of any commercially available bleach containing 5.25% sodium hypochlorite to 250 ml with deionized water. Make fresh every other day.

Sodium Nitroprusside (Sodium Nitroferricyanide), 0.05%

Sodium nitroprusside [$Na_2Fe(CN)_5NO \cdot 2\ H_2O$]	0.5 g
Deionized water	1000 ml

In a 1000 ml volumetric flask, dissolve 0.5 g of sodium nitroprusside in 900 ml of deionized water. Dilute to 1000 ml with deionized water. Store in a light resistant container.

Standards

Stock Ammonium Standard, 1,500 µM

Ammonium sulfate [$(NH_4)_2SO_4$], dried at 45°C	0.100 g
Deionized water	1000 ml
Chloroform ($CHCl_3$)	1 ml

In a 1000 ml volumetric flask, dissolve 0.1 g of ammonium sulfate in ~900 ml of deionized water. Dilute to 1000 ml with deionized water. Add 1 ml chloroform to act as a preservative (1 ml contains 1.5 µmoles N).

Working Ammonium Standards

Dilute 0.1, 0.2, 0.4, 0.6 and 0.8 ml of Stock Ammonium Standard to 100 ml with deionized water to yield concentrations of 1.5 µM N (0.021 mg/l), 3 µM N (0.042 mg/l), 6 µM N (0.084 mg/l), 9 µM N (0.126 mg/l) and 12 µM N (0.168 mg/l), respectively.

Procedure

1. Check the level of all reagents at start-up to ensure adequate supply.

2. Place all lines into their respective containers and start the proportioning pump. Allow ~10 minutes equilibration time.

3. Place a saline primer (artificial seawater) before the actual samples to avoid an abnormal peak for the first sample. Place a deionized water cup before an intersample calibrant.

   A typical tray protocol appears as follows:

   P, 5C, H@2, 2L@6, A@119, 20S>7, W@120, 2I@3, S@119, 20S>26,....

   where:
   - P = primer (100% FS standard),
   - C = calibrant,
   - H = 100% FS standard,
   - L = 20% FS standard,
   - A = artificial seawater,
   - S = samples,
   - W = deionized water, and
   - I = intersample calibrant.

4. At shut-down, remove all reagent lines from their respective containers excluding the sampler solution line and place them in deionized water containing 1 ml/l of 30% Brij-35.

5. After 5 minutes, allow all lines to pump dry. Stop the pump and release the platen.

NOTES:

1. The gain setting of 40 - 45 should yield peaks of ~70 - 80 lines with a 12 µM N standard.

2. Reagent blanks appear to be quite variable. If the reagent blank is >10 lines with the appropriate gain setting (40 - 45) and baseline setting (32 - 38), then prepare fresh reagent.

3. Close attention should be paid to prevent contamination of samples. Smoking and the use of ammonium-containing cleaning solutions should be prohibited within the air-handling limits surrounding the laboratory. Sample bottles should be stored in a clean environment and only opened when necessary. Samples should never be pipetted by mouth. Samples should be analyzed immediately upon opening.

NITRITE

Revised 1/97

Nitrite reacts under acidic conditions with sulfanilamide to form a diazo compound that couples with N-1-naphthylethylenediamine dihydrochloride to form a reddish-purple azo dye measured at 520 nm..

Methodology

Technicon Industrial Method No. 818-87T. February 1987. Technicon Industrial Systems. Tarrytown, New York, 10591.

Instrumentation

Technicon TrAAcs-800 Nutrient Analyzer

Manifold Assembly

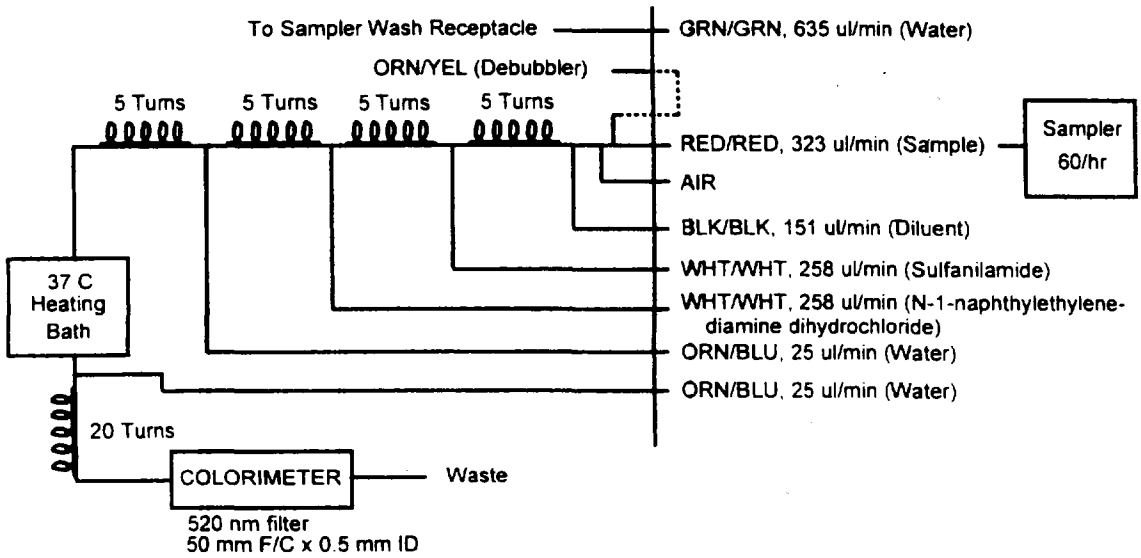

Figure 3. Manifold assembly for nitrite method.

Specifications

Gain: 53
Baseline: 36 - 37
Sampling Rate: 60/hour
Filter: 520 nm
Flowcell: 50 mm
Relative Absorbance (3 µM N): ~0.165

Reagents

Sulfanilamide Solution

Sulfanilamide (4 $NH_2C_6H_4SO_2NH_2$)	2.5 g
Hydrochloric acid (HCl), concentrated	25 ml
Deionized water, qs	500 ml
Triton X-100 (Technicon No. T21-0188-06)	few drops

In a 500 ml volumetric flask, add 2.5 g of sulfanilamide and 25 ml of concentrated hydrochloric acid to ~300 ml of deionized water. Swirl to dissolve and dilute to 500 ml with deionized water. Add a few drops of Triton X and mix thoroughly. Store in light resistant container. Refrigerate when not in use.

N-1-Naphthylethylenediamine Dihydrochloride Solution

N-1-naphthylethylenediamine dihydrochloride ($C_{12}H_{14}N_2 \cdot 2HCl$)	0.25 g
Deionized water	500 ml
Triton X-100 (Technicon No. T21-0188-06)	few drops

In a 500 ml volumetric flask, dissolve 0.25 g of N-1-naphthylethylenediamine dihydrochloride in ~300 ml of deionized water. Dilute to 500 ml with deionized water. Add a few drops of Triton X and mix thoroughly. Store in a light resistant container. Refrigerate when not in use.

Standards

Stock Nitrite Standard, 5,000 µM

Sodium nitrite ($NaNO_2$), dried at 45°C	0.345 g
Deionized water	1000 ml
Chloroform ($CHCl_3$)	1 ml

In a 1000 ml volumetric flask, dissolve 0.345 g of sodium nitrite in ~600 ml of deionized water. Dilute to 1000 ml with deionized water. Add 1 ml of chloroform as a preservative (1 ml contains 5 µmoles N).

Secondary Nitrite Standard

Stock Nitrite Standard	0.8 ml
Deionized water, q.s.	100 ml

In a 100 ml volumetric flask, dilute 0.8 ml of Stock Nitrite Standard to 100 ml with deionized water to yield a concentration of 40 µM N.

Working Nitrite Standards

Dilute 0.5, 1, 2.5, 5 and 7.5 ml of Secondary Nitrite Standard to 100 ml with deionized water to yield concentrations of 0.2 µM N (0.0028 mg/l), 0.4 µM N (0.0056 mg/l), 1 µM N (0.014 mg/l), 2 µM N (0.028 mg/l) and 3 µM N (0.042 mg/l), respectively.

Procedure

Run this analysis concurrently with ammonium, using a synthetic seawater cup prior to a sample set and a deionized water cup prior to an intersample calibrant (See Ammonium methodology). The 3-way stream divider (PT 2 connector, P/N 116-B000-01) used to split the sample is the appropriate size for the pump tubes used. Stream dividers with smaller ports create gas bubbles with the rapid movement of sample through the fitting.

NOTES:

1. A gain setting of 53 should yield peaks of ~80 lines using a 3 μM N standard.

2. This is a very steady analysis with a smooth baseline, well defined peaks, minimal baseline correction and minimal carry-over correction.

NITRITE + NITRATE

Revised 1/97

Filtered samples are passed through a granulated copper-cadmium column to reduce nitrate to nitrite. The nitrite (originally present plus reduced nitrate) then is determined by diazotizing with sulfanilamide and coupling with N-1-naphthylethylenediamine dihydrochloride to form a colored azo dye. Nitrate concentration is obtained by subtracting the corresponding nitrite value from the nitrite + nitrate concentration.

Methodology

Technicon Industrial Method No. 158-71 W/A† Tentative. 1977. Technicon Industrial Systems. Tarrytown, New York, 10591.

USEPA. 1979. Method No. 353.2 *in* Methods for chemical analysis of water and wastes. United States Environmental Protection Agency, Office of Research and Development. Cincinnati, Ohio. Report No. EPA-600/4-79-020 March 1979. 460pp.

Instrumentation

Technicon AutoAnalyzer II

Manifold Assembly

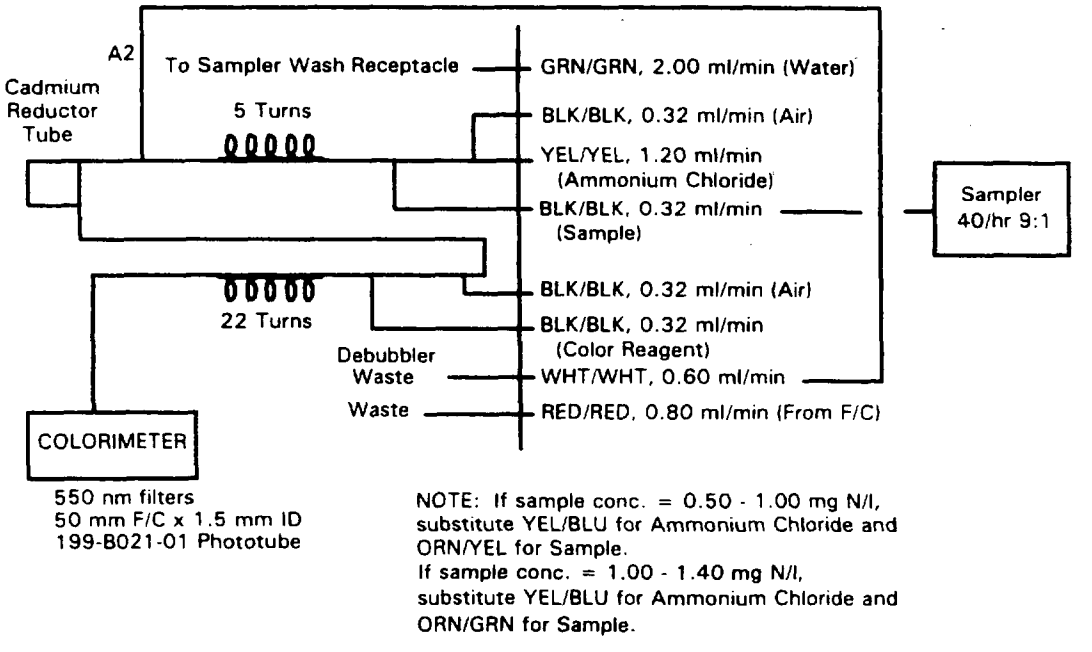

Figure 4. Manifold assembly for nitrite + nitrate method.

Specifications

Standard Calibration Settings:
ORN/GRN sample tube: 1.0
ORN/YEL sample tube: 2.0, 1.0
BLK/BLK sample tube: 9.0, 6.0, 2.0, 1.0
Dilution loop: 2.0, 1.0
Damp: Normal
Sampling Rate: 40/hour, 9:1 sample/wash ratio
Filter: 550 nm
Phototube: 199-B021-01
Flowcell: 50 mm
Relative Absorbance (20 μM NO_3^--N; BLK/BLK sample tube): ~.55

Interferences: Metal ions may interfere if present in sufficient concentrations. The presence of large concentrations of sulfide and/or sulfate greatly reduce the sensitivity of the copper-cadmium column.

Reagents

Alkaline Water

Sodium hydroxide (NaOH, pellets)	0.20 ± 0.02 g
Deionized water	1000 ml

Add 0.20 g of sodium hydroxide pellets to 1000 ml of deionized water.

Copper Sulfate Reagent, 2%

Copper sulfate ($CuSO_4 \cdot 5\ H_2O$)	2 g
Deionized water	100 ml

In a 100 ml volumetric flask, dissolve 2 g of copper sulfate in ~80 ml of deionized water. Dilute to 100 ml with deionized water.

Ammonium Chloride Reagent

Ammonium chloride (NH_4Cl)	10 g
Alkaline Water	1000 ml
Copper Sulfate Reagent, 2%	6 drops

In a 1000 ml volumetric flask, dissolve 10 g of ammonium chloride in ~800 ml of Alkaline Water and dilute to 1000 ml with Alkaline Water. Attain a pH balance of 8.5. Add 6 drops of 2% Copper Sulfate Reagent.

Color Reagent

Sulfanilamide ($C_6H_8N_2O_2S$)	20 g
Phosphoric acid (H_3PO_4), concentrated (80%)	200 ml
N-1-naphthylethylenediamine dihydrochloride ($C_{12}H_{14}N_2 \cdot 2HCl$)	1 g
Deionized water, q.s.	2000 ml
Brij-35 (Bran + Luebbe No. T21-0100-06), 30%	1 ml

In a 2000 ml volumetric flask, add 200 ml concentrated phosphoric acid and 20 g of sulfanilamide to ~1500 ml deionized water. Dissolve completely. Add 1 g of N-1-naphthylethylenediamine dihydrochloride and dissolve. Dilute to 2000 ml with deionized water and add 1 ml of 30% Brij-35. Store in refrigerator. Prepare every 6 weeks.

Preparation of Copper-Cadmium Column

1. Use good quality cadmium filings (25 - 60 mesh size).

2. Clean 10 g of cadmium with 50 ml of [illegible] N hydrochloric acid for 1 minute. Decant the hydrochloric acid and wash the cadmium with another 50 ml of [illegible] N hydrochloric acid for 1 minute.

3. Decant the hydrochloric acid and wash the cadmium several times with deionized water.

4. Decant the deionized water and add 50 ml of 2% (w/v) copper sulfate ($CuSO_4 \cdot 5H_2O$). Wash the cadmium until no blue color remains in the solution.

5. Add another 50 ml of 2% (w/v) copper sulfate and wash the cadmium until no blue color remains in the solution.

6. Decant and wash thoroughly (~10 times) with deionized water.

7. Fill the reductor column (22 cm length of 0.110-inch ID tubing) with Ammonium Chloride Reagent and transfer the prepared cadmium particles to the column using a Pasteur pipette or some other method that prevents contact of the cadmium pellets with air. Do not allow any air bubbles to be trapped in the column. Pack the entire column uniformly with filings such that, visually, the packed filings have separation gaps ≤~1 mm.

8. When the entire column is well-packed with granules, insert glass wool plugs at both ends of the column. With reagents running through the system, attach the column. Remember to have no air bubbles in the valve and to attach the column to the intake side of the valve first.

9. Check for good flow characteristics (good bubble pattern) after the addition of air bubbles beyond the column. If the column is packed too tightly, an inconsistent flow pattern will result.

10. Prior to sample analysis, condition the column with approximately 100 mg nitrate/l for 5 minutes followed by 100 mg nitrite/l for 10 minutes.

11. Analyze Working Standard A (40 μM NO_3^--N) and Working Nitrite Standard (40 μM NO_2^--N). If the peak height of Working Standard A is <90% of the peak height of Working Nitrite Standard, prepare a new cadmium reduction column.

Standards

Stock Nitrate Standard, 5,000 μM

Potassium nitrate (KNO_3), dried at 45°C	0.5055 g
Deionized water	1000 ml

In a 1000 ml volumetric flask, dissolve 0.5055 g of potassium nitrate in ~800 ml of deionized water. Dilute to 1000 ml with deionized water (1 ml contains 5 μmoles N).

Working Standard A

Stock Nitrate Standard	0.8 ml
Deionized water, q.s.	100 ml

In a 100 ml volumetric flask, dilute 0.8 ml of Stock Nitrate Standard to 100 ml with deionized water to yield a concentration of 40 μM N (0.56 mg N/l).

Working Nitrate Standards

Dilute 0.8 ml of Stock Nitrate Standard to 200 ml with deionized water to yield concentrations of 20 µM N (0.28 mg N/l).

Dilute 2.0 ml of Stock Nitrate Standard to 100 ml with deionized water to yield concentrations of 100 µM N (1.40 mg N/l) for use with the ORN/GRN sample tube, YEL/BLU NH_4Cl tube and sample concentrations of 1.00 - 1.40 mg N/l (nitrite + nitrate).

Dilute 1.0 ml and 1.5 ml of Stock Nitrate Standard to 100 ml with deionized water to yield concentrations of 50 and 75 µM N (0.70 and 1.05 mg N/l), respectively for use with the ORN/YEL sample tube, YEL/BLU NH_4Cl tube and sample concentrations of 0.50 - 1.00 mg N/l (nitrite + nitrate).

Dilute 2.5, 5, 10, 15 and 25 ml of Working Standard A to 100 ml with deionized water to yield concentrations of 1 µM N (0.014 mg N/l), 2 µM N (0.028 mg N/l), 4 µM N (0.056 mg N/l), 6 µM N (0.084 mg N/l) and 10 µM N (0.140 mg N/l), respectively.

Dilute 3.0, 5.0, 6.0 and 8.0 ml of Stock Nitrate Standard to 100 ml with deionized water to yield concentrations of 150, 250, 300 and 400 µM N (2.1, 3.5, 4.2 and 5.6 mg N/l) for use with the dilution loop and sample concentrations of 1.40 - 5.60 mg N/l (nitrite + nitrate). The nitrate sample is sampled originally with an ORN/WHT sample tube and YEL/YEL deionized water diluent tube which is then "resampled" to an ORN/YEL resample tube and YEL/BLU NH_4Cl tube.

Stock Nitrite Standard, 5,000 µM

Sodium nitrite ($NaNO_2$), dried at 45°C	0.345 g
Deionized water	1000 ml
Chloroform ($CHCl_3$)	1 ml

In a 1000 ml volumetric flask, dissolve 0.345 g of sodium nitrite in ~600 ml of deionized water. Dilute to 1000 ml with deionized water. Add 1 ml of chloroform as a preservative (1 ml contains 5 µmoles N).

Working Nitrite Standard

Dilute 0.8 ml of Stock Nitrite Standard to 100 ml with deionized water to yield a concentration of 40 µM N (0.56 mg N/l).

SILICATE

Revised 1/97

This reaction is based on the reduction of silicomolybdate in acidic solution to "molybdenum blue" by ascorbic acid. Oxalic acid is added to minimize interference from phosphates.

Methodology

Technicon Industrial Method No. 811-86T. November 1986. Technicon Industrial Systems. Tarrytown, New York, 10591.

Instrumentation

Technicon TrAAcs-800 Nutrient Analyzer

Manifold Assembly

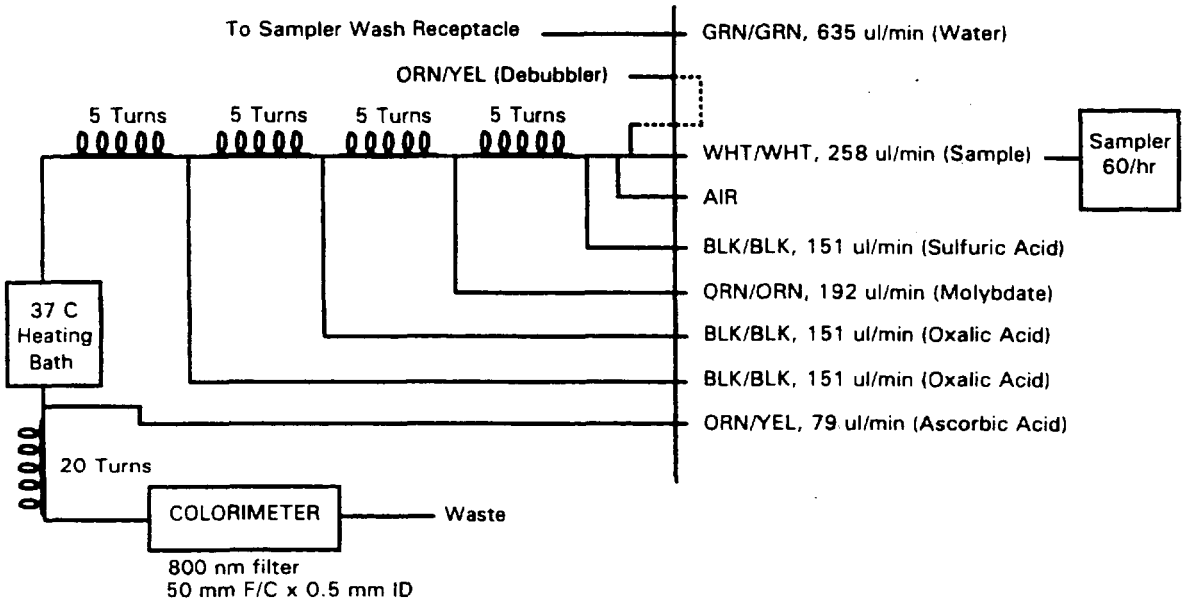

Figure 5. Manifold assembly for silicate method.

Specifications

Gain: 8
Baseline: 39 - 42
Sampling Rate: 60/hour
Filter: 800 nm
Flowcell: 50 mm
Relative Absorbance (75 µM Si): ~1.10
Interferences: Salinity may interfere.

Reagents

Oxalic Acid Solution

Oxalic acid ($H_2C_2O_4 \cdot 2H_2O$)	100 g
Deionized water	1000 ml

In a 1000 ml volumetric flask, dissolve 100 g of oxalic acid in ~900 ml deionized water and dilute to 1000 ml with deionized water.

Ascorbic Acid Solution

Oxalic acid ($H_2C_2O_4 \cdot 2\ H_2O$)	5 g
Ascorbic acid ($C_6H_8O_6$), U.S.P. quality	100 g
Deionized water	1000 ml

In a 1000 ml volumetric flask, dissolve 5 g of oxalic acid in ~800 ml of deionized water. Add 100 g of ascorbic acid and mix until dissolved. Dilute to 1000 ml with deionized water.

Ammonium Molybdate Solution

Ammonium molybdate [$(NH_4)_6Mo_7O_{24} \cdot 4\ H_2O$]	7.5 g
Deionized water	250 ml

In a 250 ml volumetric flask, dissolve 7.5 g of ammonium molybdate in ~200 ml of deionized water. Dilute to 250 ml with deionized water.

Stock Phosphate Solution (Baseline Spike)

Potassium phosphate (KH_2PO_4), dried at 45°C	0.4394 g
Deionized water	1000 ml

In a 1000 ml volumetric flask, dissolve 0.4394 g of potassium phosphate in ~600 ml of deionized water. Dilute to 1000 ml with deionized water. Prepare fresh when making 0.7 N Sulfuric Acid Solution.

Sulfuric Acid Solution, 0.7 N

Sulfuric acid (H_2SO_4), concentrated (sp. gr. 1.84)	4.06 ml
Stock Phosphate Solution	21.4 ml
Sodium dodecyl sulfate, (SDS) [$CH_3(CH_2)_{11}OSO_3Na$; m.w. = 288.38; phosphate ≤0.0001 %]	~0.25 g
Deionized water, q.s.	1000 ml

In a 1000 ml volumetric flask, add 4.06 ml of concentrated sulfuric acid and 21.4 ml of Stock Phosphate Solution to ~600 ml of deionized water. Dilute to 1000 ml with deionized water. Add ~0.25 g of SDS.

Sodium Hydroxide Wash Solution

Sodium hydroxide (NaOH)	4 g
Deionized water	1000 ml

In a 1000 ml volumetric flask, dissolve 4 g of sodium hydroxide in ~800 ml of deionized water. Dilute to 1000 ml with deionized water.

Sampler (Baseline) Solution

Isopropanol [$(CH_3)_2CHOH$]	100 ml
Deionized water, q.s.	1000 ml

In a 1000 ml volumetric flask, dilute 100 ml of isopropanol to 1000 ml with deionized water.

Standards

Stock Silicate Standard, 10,000 µM

Sodium silica fluoride (Na_2SiF_6), dried at 45°C	1.88 g
Deionized water	1000 ml

In a 1000 ml volumetric flask, dissolve 1.88 g of sodium silica fluoride in ~900 ml of deionized water. Dilute to 1000 ml with deionized water (1 ml contains 10 µmoles Si). Store in a plastic container.

Working Silicate Standards

Dilute 0.05, 0.1, 0.2, 0.3, 0.4, 0.5 and 0.75 ml of Stock Silicate Standard to 100 ml with deionized water to yield concentrations of 5 µM Si (0.14 mg/l), 10 µM Si (0.281 mg/l), 20 µM Si (0.562 mg/l), 30 µM Si (0.843 mg/l), 40 µM Si (1.124 mg/l), 50 µM Si (1.41 mg/l) and 75 µM Si (2.10 mg/l), respectively.

NOTE:

1. The use of glassware with this method should be avoided because it may be a source of silica contamination. All chemicals used for reagents and the deionized water should be of good quality and low in silica.

2. Sampler (Baseline) Solution of isopropanol is used instead of deionized water as baseline solution to counter the effect of salt water on the system due to its high refractive index relative to deionized water.

Procedure

1. At start-up, check the level of all reagents to ensure an adequate supply.

2. With the molybdate line pumping air, place all other lines into their respective containers and start the proportioning pump.

3. After 2 - 3 minutes, place the molybdate line into its container. Allow ~10 minutes equilibration.

4. A typical tray protocol appears as follows:

P, 5C, H, 2L, *n*S, I,....

where:
P = primer (100% FS standard),
C = calibrant,
H = 100% FS standard,
L = 20% FS standard,
S = samples, and
I = intersample calibrant.

5. At shut-down, remove all reagent lines and place into the Sodium Hydroxide Wash Solution container. Allow to pump 5 minutes.

6. Remove all lines from the wash container and place into deionized water with SDS. Allow to pump 10 minutes.

SULFATE, CHLORIDE AND NITRATE Revised 1/97

A small volume of filtered sample is introduced into an ion chromatograph (IC). The sample is pumped through a precolumn, separator column, suppressor column and conductivity detector. Anions are separated in the precolumn and separator column based on their affinity for resin exchange sites in the columns. The suppressor column converts the sample anions to their acid form. The separated anions are measured by the conductivity detector. The concentration of anions is determined by comparing peak heights of unknowns to a calibration curve generated from known standards.

Methodology

Pfaff, J.D., C.A. Brockhoff and J.W. O'Dell. August 1991. USEPA Test Method No.300.0. The determination of inorganic anions in water by ion chromatography. Environmental Monitoring and Systems Laboratory, Cincinnati, OH 45268.

USEPA. 1987. Section 11.0 Determination of chloride, nitrate, and sulfate by ion chromatography *in* Handbook of methods for acid deposition studies: Laboratory analysis for surface water chemistry. United States Environmental Protection Agency, Office of Research and Development. Washington, D.C. Report No. EPA 600/4-87/026 September 1987. 336pp.

Instrumentation

Rainin Co. Inc./Dionex Hybrid Ion Chromatography System with Macintosh compatible Dynamax HPLC Method Manager Version 1.3

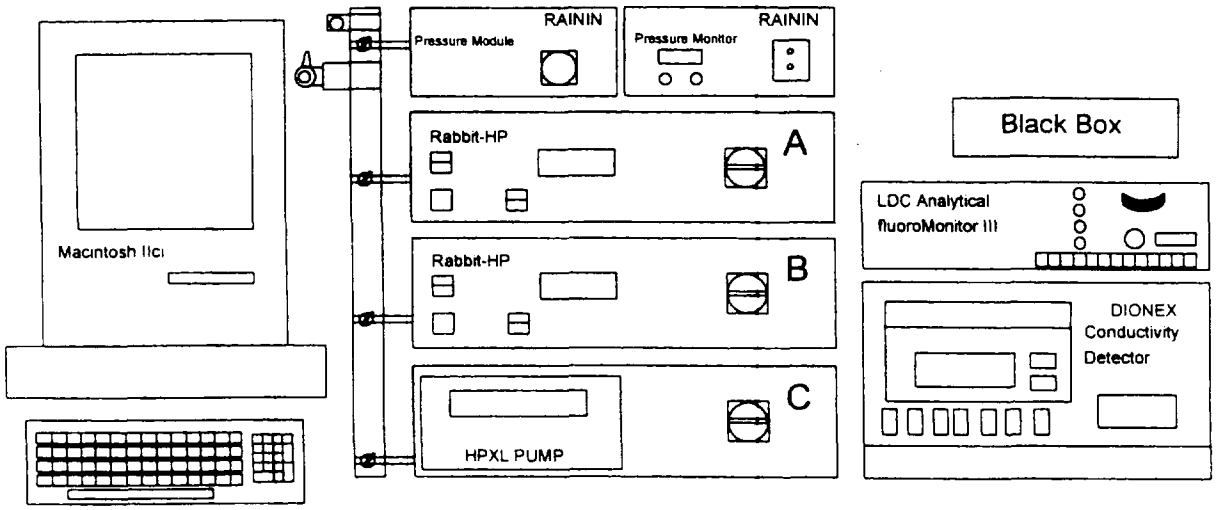

Figure 6. Schematic of the Rainin Co. Inc./Dionex Hybrid Ion Chromatography System.

Reagents

Eluent

Sodium carbonate (Na_2CO_3)	0.3816 g
Sodium bicarbonate ($NaHCO_3$)	0.2856 g
Deionized water	2000 ml

In a 2000 ml volumetric flask, dissolve 0.3816 g of sodium carbonate and 0.2856 g of sodium bicarbonate in ~1500 ml of deionized water. Dilute to 2000 ml with deionized water. Filter through 0.4 µm Nuclepore filter.

Regenerant

Sulfuric acid (H_2SO_4), concentrated	1.4 ml
Deionized water	2000 ml

In a 2000 ml volumetric flask, dilute 1.4 ml of concentrated sulfuric acid to 2000 ml with deionized water.

Standards

Stock Sodium Chloride Standard

Sodium chloride (NaCl), dried at 45°C	1.6485 g
Deionized water	1000 ml

In a 1000 ml volumetric flask, dissolve 1.6485 g of sodium chloride in ~800 ml of deionized water. Dilute to 1000 ml with deionized water (1 ml contains 1 mg Cl^-).

Stock Sodium Sulfate Standard

Sodium sulfate (Na_2SO_4), dried at 45°C	1.8141 g
Deionized water	1000 ml

In a 1000 ml volumetric flask, dissolve 1.8141 g of potassium sulfate in ~800 ml of deionized water. Dilute to 1000 ml with deionized water (1 ml contains 1 mg SO_4^{-2}).

Stock Sodium Nitrate Standard

Sodium nitrate ($NaNO_3$), dried at 45°C	6.0679 g
Deionized water	1000 ml

In a 1000 ml volumetric flask, dissolve 6.0679 g of sodium nitrate in ~800 ml of deionized water. Dilute to 1000 ml with deionized water (1 ml contains 1 mg NO_3^--N).

Working 5:5:0.5 Chloride/Sulfate/Nitrate Standard

Stock Sodium Chloride Standard	0.5 ml
Stock Sodium Sulfate Standard	0.5 ml
Stock Sodium Nitrate Standard	0.05 ml
Deionized water, q.s.	100 ml

In a 100 ml volumetric flask, dilute 0.5 ml of Stock Sodium Chloride Standard, 0.5 ml of Stock Potassium Sulfate Standard and 0.05 ml Stock Sodium Nitrate Standard to 100 ml with deionized water (1 ml contains 5 µg Cl^-, 5 µg SO_4^{-2} and 0.5 µg NO_3^--N).

Working 15:15:1 Chloride/Sulfate/Nitrate Standard

Stock Sodium Chloride Standard	1.5 ml
Stock Sodium Sulfate Standard	1.5 ml
Stock Sodium Nitrate Standard	0.1 ml
Deionized water, q.s.	100 ml

In a 100 ml volumetric flask, dilute 1.5 ml of Stock Sodium Chloride Standard, 1.5 ml of Stock Sodium Sulfate Standard and 0.1 ml of Stock Sodium Nitrate Standard to 100 ml with deionized water (1 ml contains 15 µg Cl^-, 15 µg SO_4^{-2} and 1 µg NO_3^--N).

Working 30:30:2 Chloride/Sulfate/Nitrate Standard

Stock Sodium Chloride Standard	3.0 ml
Stock Sodium Sulfate Standard	3.0 ml
Stock Sodium Nitrate Standard	0.2 ml
Deionized water, q.s.	100 ml

In a 100 ml volumetric flask, dilute 3.0 ml of Stock Sodium Chloride Standard, 3.0 ml of Stock Sodium Sulfate Standard and 0.2 ml of Stock Sodium Nitrate Standard to 100 ml with deionized water (1 ml contains 30 µg Cl^-, 30 µg SO_4^{-2} and 2 µg NO_3^--N).

Working 50:50:4 Chloride/Sulfate/Nitrate Standard

Stock Sodium Chloride Standard	5.0 ml
Stock Sodium Sulfate Standard	5.0 ml
Stock Sodium Nitrate Standard	0.4 ml
Deionized water, q.s.	100 ml

In a 100 ml volumetric flask, dilute 5.0 ml of Stock Sodium Chloride Standard, 5.0 ml of Stock Sodium Sulfate Standard and 0.4 ml of Stock Sodium Nitrate Standard to 100 ml with deionized water (1 ml contains 50 µg Cl^-, 50 µg SO_4^{-2} and 4 µg NO_3^--N).

Procedure

Each sample to be analyzed must be pre-treated to remove organic particles that may bind to column beads, reducing column efficiency and reliability. Organic particles are removed by a Bakerbond SPE C-18 column and filtration through a Gelman 0.2 µm Acrodisk designed for use with an IC system.

1. To prepare the C-18 columns, pass 2 column volumes of HPLC grade methanol through each column. Then pass 3 column volumes of deionized water through each column.

2. To prepare a sample, first remove all of the water from a column then immediately place 1 ml of sample into the column.

3. Place a Gelman Acrodisk on the end of the column containing the sample.

4. Pass the sample through the column using a syringe. Discard the first 5 drops. Capture the next 10 drops in a microcentrifuge tube.

5. The captured sample may then be injected directly into the IC. There is adequate sample to rinse the injection syringe once.

6. Rinse the injection syringe ~6 times with deionized water between consecutive samples.

ORGANIC ANALYTES

Rationale

Methods for measuring dissolved organic carbon, nitrogen and phosphorus are described in the following sections. All procedures except Kjeldahl require the addition of potassium persulfate to a sample, which when under heat and pressure, breaks down the organic constituents to inorganic forms. Inorganic fractions then are subtracted from the total dissolved sample to yield the dissolved organic concentration. See Figures 7 and 8.

Sampling and Storage

Collected water samples are filtered through Whatman GF/F filters (nominal pore size 0.7 μm) and placed in appropriate containers and preserved. Table 2 presents sampling and storage practices for organic analytes. Containers for dissolved organic carbon are acid washed in 10% HCl and rinsed thoroughly with deionized water. Containers for nitrogen and phosphorus are autoclaved with potassium persulfate before use, then rinsed thoroughly with deionized water only.

Table 2. Sampling and storage for organic analytes

ANALYTE	VOLUME (ml)	STORAGE	CONTAINER
Dissolved organic carbon	~30	-20°C	Teflon or Borosilicate Glass Vial[1]
Dissolved nitrogen/phosphorus	10	-20°C	Borosilicate Glass Screw-cap Tube
Dissolved phosphorus (acid persulfate)	20	-20°C	Borosilicate Glass Screw-cap Tube
Dissolved Kjeldahl	~50	H_2SO_4	Polypropylene Centrifuge Tube

[1] Teflon vials are used for freshwater samples. EPA recommended Wheaton-33® low extractable borosilicate glass vials are used for saltwater samples.

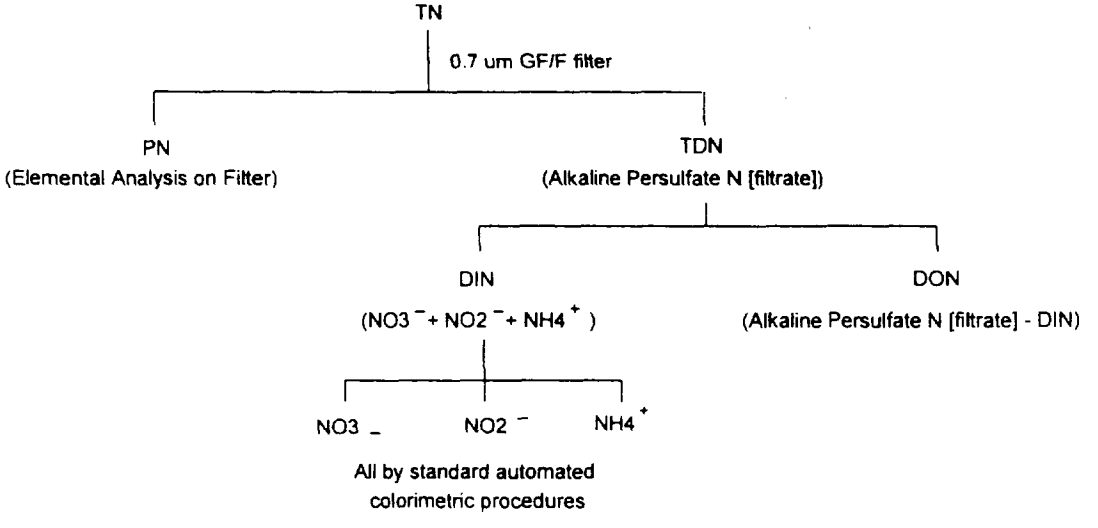

Figure 7. Flow diagram of nitrogen analysis (TN = total nitrogen, PN = particulate nitrogen, TDN = total dissolved nitrogen, DIN = dissolved inorganic nitrogen, DON = dissolved organic nitrogen).

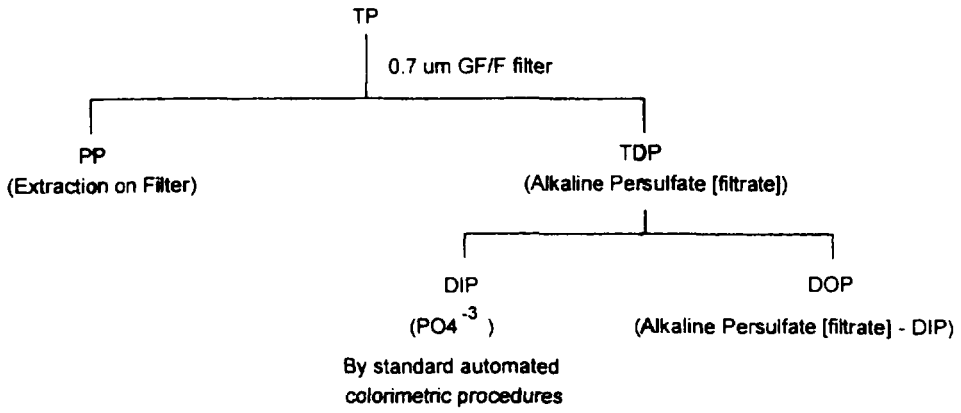

Figure 8. Flow diagram of phosphorus analysis (TP = total phosphorus, PP = particulate phosphorus, TDP = total dissolved phosphorus, DIP = dissolved inorganic phosphorus, DOP = dissolved organic phosphorus).

TOTAL DISSOLVED NITROGEN AND PHOSPHORUS

Revised 1/97

This method is a persulfate oxidation technique for nitrogen and phosphorus where, under initially alkaline conditions, nitrate is the sole nitrogen product. Phosphate is the sole phosphorus product after acidic conditions are achieved following further autodecomposition of the persulfate in the heated oxidation tubes..

Digested samples are passed through a granulated copper-cadmium column to reduce nitrate to nitrite. The nitrite then is determined by diazotizing with sulfanilamide and coupling with N-1-naphthylethylenediamine dihydrochloride to form a colored azo dye. Color is proportional to nitrogen concentration.

Ammonium molybdate and antimony potassium tartrate react in an acid medium with dilute solutions of phosphorus to form an antimony-phospho-molybdate complex which is reduced to an intensely blue-colored complex by ascorbic acid. Color is proportional to phosphorus concentration.

Methodology

D'Elia, C.F., P.A. Steudler and N. Corwin. 1977. Determination of total nitrogen in aqueous samples using persulfate digestion. Limnol. Oceanogr. 22:760-764.

Valderrama, J.C. 1981. The simultaneous analysis of total nitrogen and total phosphorus in natural waters. Mar. Chem. 10:109-122.

Instrumentation

Technicon AutoAnalyzer II

Manifold Assembly

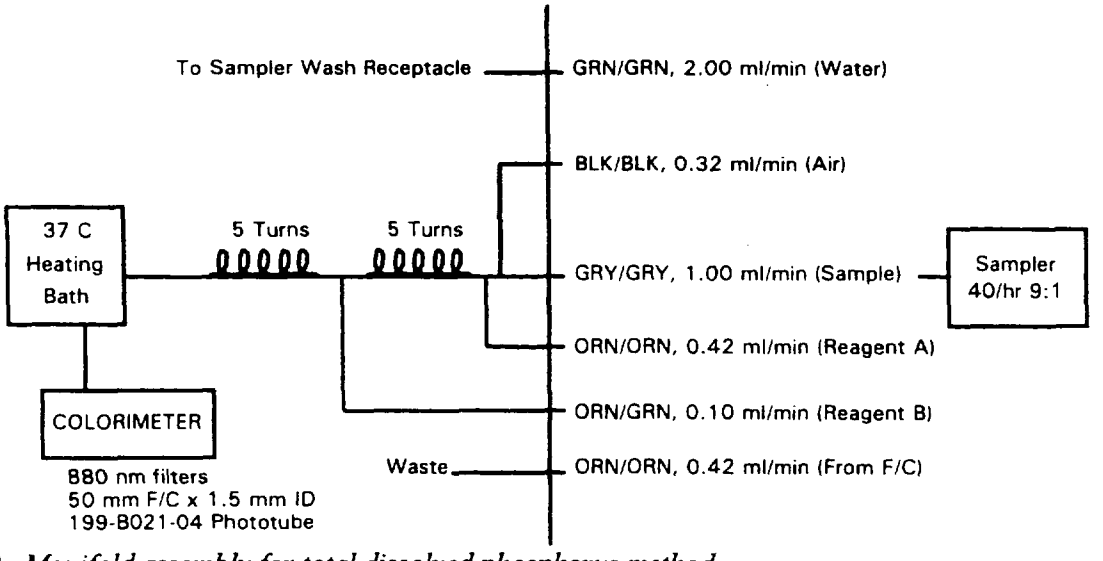

Figure 9. Manifold assembly for total dissolved phosphorus method.

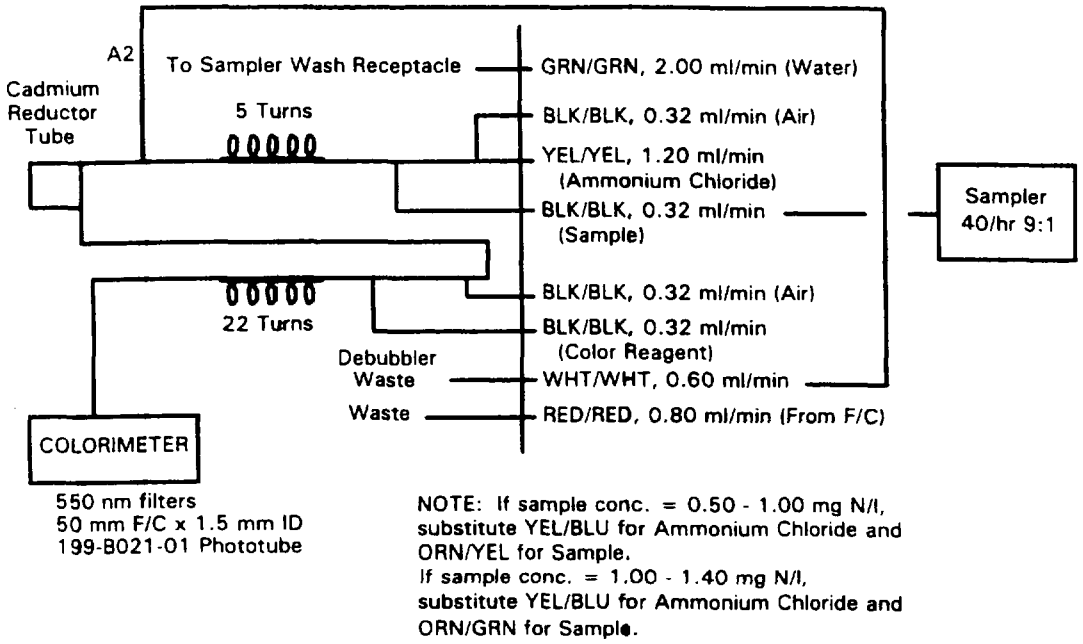

Figure 10. Manifold assembly for total dissolved nitrogen method.

Specifications

Damp: Normal
Sampling Rate: 40/hour, 9:1 sample/wash ratio
Filters: 550 nm for nitrate and 880 nm for phosphate
Phototubes: 199-B021-01 for nitrate and 199-B021-04 for phosphate
Flowcell: 50 mm
Relative Absorbance (40 μM NO_3^--N; OR/YEL sample tube): ~.59
Relative Absorbance (12 μM P): ~.80

Interferences: Metal ions may interfere if present in sufficient concentrations. The presence of high concentrations of sulfate will reduce the sensitivity of the copper-cadmium column. Silicon at a concentration of 100 µM Si causes interferences equivalent to ~0.04 µM P.

Reagents

Oxidizing Reagent - Low N and P Concentrations

Sodium hydroxide (NaOH)	3 g
Potassium persulfate ($K_2S_2O_8$), low N (<0.001 %)	20.1 g
Deionized water	1000 ml

In a 1000 ml volumetric flask, dissolve 3 g of sodium hydroxide and 20.1 g of potassium persulfate in ~800 ml of deionized water. Dilute to 1000 ml with deionized water. Make fresh daily.

Oxidizing Reagent - High N and P Concentrations

Sodium hydroxide (NaOH)	3 g
Potassium persulfate ($K_2S_2O_8$), low N (<0.001 %)	20.1 g
Deionized water	3000 ml

In a 3000 ml volumetric flask, dissolve 3 g of sodium hydroxide and 20.1 g of potassium persulfate in ~800 ml of deionized water. Dilute to 3000 ml with deionized water. Make fresh daily.

Buffer Solution

Boric acid (H_3BO_3)	61.8 g
Sodium hydroxide (NaOH)	8 g
Deionized water	1000 ml

In a 1000 ml volumetric flask, dissolve 61.8 g of boric acid in ~300 ml deionized water. Add 8 g of sodium hydroxide and dilute to 1000 ml with deionized water. The solution is stable for several weeks.

Internal Standards

Stock Glutamic Acid Standard, 5,040 µM

Glutamic acid [$C_3H_2NH_2(COOH)_2$], dried at 45°C	0.3705 g
Deionized water	500 ml
Chloroform ($CHCl_3$)	0.5 ml

In a 500 ml volumetric flask, dissolve 0.3705 g of glutamic acid in ~400 ml of deionized water and dilute to 500 ml with deionized water. Add 0.5 ml of chloroform as a preservative (1 ml contains 5.04 µmoles N).

Working Glutamic Acid Standard - Low N and P Concentrations

Stock Glutamic Acid Standard	1 ml
Deionized water, q.s.	100 ml

In a 100 ml volumetric flask, dilute 1 ml of Stock Glutamic Acid Standard to 100 ml with deionized water to yield a concentration of 50.4 µM N (0.7056 mg N/l).

Working Glutamic Acid Standards - High N and P Concentrations

Stock Glutamic Acid Standard	6 ml
Deionized water, q.s.	100 ml

In a 100 ml volumetric flask, dilute 6 ml of Stock Glutamic Acid Standard to 100 ml with deionized water to yield a concentration of 302.4 µM N (4.23 mg N/l).

Stock Glycerophosphate Standard, 309 µM

β-Glycerophosphoric acid, disodium salt, 5-hydrate [$(HOCH_2)_2CHOPO_3Na_2 \cdot 5\ H_2O$]	0.0473 g
Deionized water	500 ml
Chloroform ($CHCl_3$)	0.5 ml

In a 500 ml volumetric flask, dissolve 0.0473 g of β-Glycerophosphoric acid, disodium salt, 5-hydrate in ~400 ml of deionized water. Dilute to 500 ml with deionized water. Add 0.5 ml of chloroform as a preservative (1 ml contains 0.309 µmoles P).

Working Glycerophosphate Standard - Low N and P Concentrations

Stock Glycerophosphate Standard	1 ml
Deionized water, q.s.	100 ml

In a 100 ml volumetric flask, dilute 1 ml of Stock Glycerophosphate Standard to 100 ml with deionized water to yield a concentration of 3.09 µM P (0.096 mg P/l).

Working Glycerophosphate Standard - High N and P Concentrations

Stock Glycerophosphate Standard	2 ml
Deionized water, q.s.	100 ml

In a 100 ml volumetric flask, dilute 2 ml of Stock Glycerophosphate Standard to 100 ml with deionized water to yield a concentration of 6.18 µM P (0.192 mg P/l).

Working Inorganic Standards

Stock Nitrate Standard, 5,000 µM

Potassium nitrate (KNO_3), dried at 45°C	0.5055 g
Deionized water	1000 ml
Chloroform ($CHCl_3$)	1 ml

In a 1000 ml volumetric flask, dissolve 0.5055 g of potassium nitrate in 1000 ml of deionized water. Add 1 ml of chloroform as a preservative (1 ml contains 5 µmoles N).

Working Nitrate Standards - Low N and P Concentrations

Dilute 0.5, 1.0 and 1.5 ml of Stock Nitrate Standard to 100 ml with deionized water to yield concentrations of 25 µM N (0.35 mg N/l), 50 µM N (0.70 mg N/l) and 75 µM N (1.05 mg N/l), respectively.

Working Nitrate Standards - High N and P Concentrations

Dilute 3.0, 6.0 and 8.0 ml of Stock Nitrate Standard to 100 ml with deionized water to yield concentrations of 150 µM N (2.1 mg N/l), 300 µM N (4.2 mg N/l) and 400 µM N (5.6 mg N/l), respectively.

Stock Orthophosphate Standard, 12,000 µM

Potassium phosphate, monobasic (KH_2PO_4), dried at 45°C	1.632 g
Deionized water	1000 ml
Chloroform ($CHCl_3$)	1 ml

In a 1000 ml volumetric flask, dissolve 1.632 g of potassium phosphate in ~ 800 ml of deionized water. Dilute to 1000 ml with deionized water. Add 1 ml of chloroform as a preservative (1 ml contains 12 µmoles P).

Secondary Orthophosphate Standard

Stock Orthophosphate Standard	1 ml
Deionized water, q.s.	100 ml

In a 100 ml volumetric flask, dilute 1 ml of Stock Orthophosphate Standard to 100 ml with deionized water (1 ml contains 0.12

μmoles P).

Working Orthophosphate Standards - Low N and P Concentrations

Dilute 0.5, 1.0 and 2.5 ml of Secondary Orthophosphate Standard to 100 ml with deionized water to yield concentrations of 0.6 μM P (0.0186 mg/l), 1.2 μM P (0.0372 mg/l) and 3.0 μM P (0.093 mg/l), respectively.

Working Orthophosphate Standards - High N and P Concentrations

Dilute 2.0, 4.0 and 5.0 ml of Secondary Orthophosphate Standard to 100 ml with deionized water to yield concentrations of 2.4 μM P (0.0744 mg/l), 4.8 μM P (0.1488 mg/l) and 6.0 μM P (0.186 mg/l), respectively.

Procedure

1. Select appropriate standards and oxidizing reagent for samples to be analyzed. For 0 - 90 μM N and 0 - 3.0 μM P, use 10 ml samples and 5 ml of Oxidizing Reagent for Low N and P Concentrations, following steps 2L - 9L. For 50 - 400 μM N and 1.0 - 6.0 μM P, use 5 ml samples and 15 ml of Oxidizing Reagent for High N and P Concentrations, following steps 2H - 9H.

2L. Place 10 ml of filtered water (Whatman GF/F filter, 0.7 μm) in a 30 ml screw cap test tube and freeze.

2H. Place 5 ml of filtered water (Whatman GF/F filter, 0.7 μm) in a 30 ml screw cap test tube and freeze.

3L. Place 10 ml of each standard (3 replicates of each) in 30 ml screw cap test tubes and treat exactly as samples.

3H. Place 5 ml of each standard (3 replicates of each) in 30 ml screw cap test tubes and treat exactly as samples.

4. When ready to analyze, thaw samples at room temperature.

5L. Add 5 ml of Oxidizing Reagent. A precipitate will form with seawater samples. Cap test tubes fairly tightly. Invert twice.

5H. Add 15 ml of Oxidizing Reagent. A precipitate will form with seawater samples. Cap test tubes fairly tightly. Invert twice.

6. Place test tubes in a pressure cooker at 100 - 110°C and 3 - 4 psi for 60 minutes. Bring back to atmospheric pressure over 1 hour.

7. Remove test tubes and cool to room temperature. Samples can be stored at this point.

8. Add 1 ml of Buffer Solution to each tube and shake. The pH of the sample should be 4 - 4.5 after the addition of the buffer solution. Transfer an aliquot of each sample to AutoAnalyzer cups using a Pasteur pipette.

9L. Analyze for nitrite + nitrate and orthophosphate as described in the Dissolved Inorganic Analytes section. Use the pump tubes for sample concentrations of 0.50 - 1.00 mg N/l; ORN/YEL NO_3^- sample tube and YEL/BLU NH_4Cl tube.

9H. Analyze for nitrite + nitrate and orthophosphate as described in the Dissolved Inorganic Analytes section. Use a BLK/BLK NO_3^- sample tube and YEL/YEL deionzed water diluent on the dilution loop "resampled" to a BLK/BLK resample tube and YEL/YEL NH_4Cl tube.

NOTES:

1. The use of internal organic standard (glutamic acid and glycerophosphate) allows the check for percentage recovery and is incorporated into each digestion batch.

2. The procedure includes an internal dilution factor of samples and standards due to addition of reagents of 1:1.6 for low N and P concentration samples and 1:4.2 for high N and P concentration samples.

3. Reagent Blanks: Oxidizing reagent only (3 replicates) is digested in 30 ml test tubes, and buffered. The analyzed peak heights of the nitrate and phosphate reagent blanks are normalized to the sample + reagent volume by adding 10 ml of deionized water immediately before analyzing for nitrite + nitrate and phosphate. The resultant reagent blank peak height then is subtracted from the sample peak heights before calculating the concentrations based on the regression from the peak heights of the standards. Reagent blank for N should be ≤8% of the peak height of the 75μM N standard. Reagent blank for P should be ≤6% of the 3.0 μM P standard.

4. Deionized Water Blanks: 10 ml of deionized water (3 replicates) are digested, and analyzed with the samples and standards. Their peak heights are included with the peak height of the digested inorganic working standards in the regression to obtain the slope used to calculate concentrations of the samples. The value of the reagent blank is generally about 0 - 5 chart lines less than the value of the y intercept obtained in the regression of inorganic working standards and deionized water blanks.

TOTAL PHOSPHORUS (ACID PERSULFATE)

Revised 1/97

Ammonium molybdate and antimony potassium tartrate react in an acid medium with dilute solutions of phosphorus to form an antimony-phospho-molybdate complex which is reduced to an intensely blue-colored complex by ascorbic acid. Color is proportional to phosphorus concentration.

Methodology

Menzel, D. W. and N. Corwin. 1965. The measurement of total phosphorus in seawater based on the liberation of organically bound fractions by persulfate oxidation. Limnol. Oceanogr. 10:280-282.

USEPA. 1979. Method No. 365.3 *in* Methods for chemical analysis of water and wastes. United States Environmental Protection Agency, Office of Research and Development. Cincinnati, Ohio. Report No. EPA-600/4-79-020 March 1979. 460pp.

Instrumentation

Technicon AutoAnalyzer II

Manifold Assembly

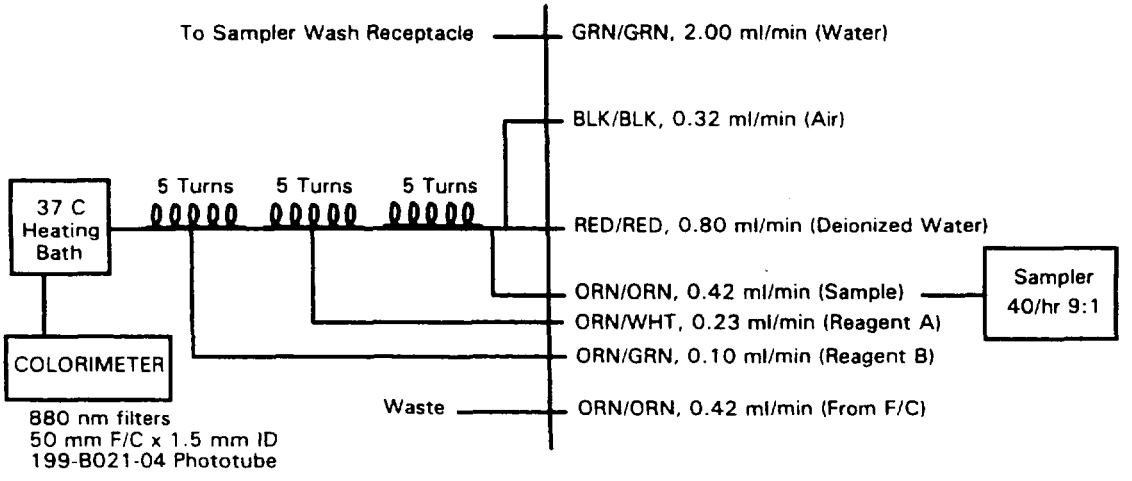

Figure 11. Manifold assembly for total phosphorus (acid persulfate) method.

Specifications

Standard Calibration Setting: 9.0
Damp: Normal
Sampling Rate: 40/hour, 9:1 sample/wash ratio
Filter: 880 nm
Phototube: 199-B021-04
Flowcell: 50 mm
Relative Absorbance (12 μM P): ~.34

Interferences: High concentrations of iron may interfere with reducing agent and cause low phosphorus recovery. High levels of arsenic may interfere.

Reagents

Sulfuric Acid Solution, 4.9 N

Sulfuric acid (H_2SO_4), concentrated (sp. gr. 1.84)	136 ml
Deionized water, q.s.	1000 ml

To a 1000 ml volumetric flask, add 136 ml of concentrated sulfuric acid to approximately 800 ml of deionized water while cooling (cold water bath). After the solution is cooled, dilute to 1000 ml with deionized water.

Ammonium Molybdate Solution

Ammonium molybdate [$(NH_4)_6Mo_7O_{24}\cdot 4\ H_2O$]	40 g
Deionized water	1000 ml

In a 1000 ml volumetric flask, dissolve 40 g of ammonium molybdate in 800 ml of deionized water. Dilute to 1000 ml with deionized water. Store in plastic bottle away from direct sunlight.

Ascorbic Acid Solution

Ascorbic acid ($C_6H_8O_6$)	18 g
Deionized water	1000 ml

In a 1000 ml volumetric flask, dissolve 18 g of ascorbic acid in 800 ml of deionized water. Dilute to 1000 ml with deionized water and dispense ~40 ml into clean polybottles and freeze. Thaw overnight in the refrigerator before use.

Antimony Potassium Tartrate Solution

Antimony potassium tartrate [$K(SbO)C_4H_4O_6\cdot\frac{1}{2}\ H_2O$]	3 g
Deionized water	1000 ml

In a 1000 ml volumetric flask, dissolve 3 g of antimony potassium tartrate in 800 ml deionized water. Dilute to 1000 ml with deionized water.

Working Reagents

Reagent A

Sulfuric Acid Solution, 4.9 N	50 ml
Ammonium Molybdate Solution	15 ml
Antimony Potassium Tartrate Solution	5 ml
Sodium dodecyl sulfate, (SDS) [$CH_3(CH_2)_{11}OSO_3Na$; m.w. = 288.38; phosphate ≤0.001%]	0.15 g

Reagent B

Ascorbic Acid Solution	30 ml
SDS	0.05 g

Standards

Stock Phosphorus Standard, 12,000 µM

Potassium phosphate, monobasic (KH_2PO_4), dried at 45°C	1.632 g
Deionized water	1000 ml
Chloroform ($CHCl_3$)	1 ml

In a 1000 ml volumetric flask, dissolve 1.632 g of potassium phosphate in 1000 ml deionized water and add 1 ml of chloroform as a preservative (1 ml contains 12 µmoles P).

Secondary Phosphorus Standard

Stock Phosphorus Standard	1 ml
Deionized water, q.s.	100 ml

In a 100 ml volumetric flask, dilute 1 ml of Stock Phosphorus Standard to 100 ml with deionized water (0.12 µM P/ml).

Working Phosphorus Standards

Dilute 0.5, 1.0, 2.0 and 2.5 ml of Secondary Phosphorus Standard to 100 ml with deionized water to yield concentrations of 0.6 µM P/l (0.0186 mg/l), 1.2 µM P/l (0.0372 mg/l), 2.4 µM P/l (0.0744 mg/l) 3.0 µM P/l (0.093 mg/l), respectively.

Stock Glycerophosphate Standard, 309 µM

β-Glycerophosphoric acid, disodium salt, 5-hydrate [$(HOCH_2)_2CHOPO_3Na_2 \cdot 5\ H_2O$], dried at 45°C	0.0473 g
Deionized water	500 ml
Chloroform ($CHCl_3$)	0.5 ml

In a 500 ml volumetric flask, dissolve 0.0473 g of β-Glycerophosphoric acid, disodium salt, 5-hydrate in ~400 ml of deionized water. Dilute to 500 ml with deionized water. Add 0.5 ml of chloroform to act as a preservative (1 ml contains 0.309 µmoles P).

Working Glycerophosphate Standard

Stock Glycerophosphate Standard	1 ml
Deionized water, q.s.	100 ml

In a 100 ml volumetric flask, dilute 1 ml of Stock Glycerophosphate Standard to 100 ml with deionized water to yield a concentration of 3.09 µM P/l (0.096 mg P/l).

Procedure

1. Prepare a 5.0% solution of potassium persulfate (25 g $K_2S_2O_8$ diluted to 500 ml with deionized water).
2. To each 20 ml of sample (in 30 ml screw cap test tube), add 3.2 ml of 5% $K_2S_2O_8$ and shake.
3. Place tubes in a pressure cooker at 3 - 4 psi for 1 hour.
4. Place 20 ml of each standard (3 replicates) in 30 ml test tubes and treat the same as samples.
5. Place 20 ml of deionized water (3 replicates) in 30 ml test tubes and treat the same as samples. These will serve as blanks.
6. Cool and shake samples. Transfer aliquot to an AutoAnalyzer cup with a Pasteur pipette and analyze for phosphate.
7. The procedure includes an internal dilution factor of samples and standards due to the addition of the potassium persulfate reagent of 1:1.16.

KJELDAHL NITROGEN

Revised 1/97

This method is no longer routinely performed by Nutrient Analytical Services. See Total Dissolved Nitrogen and Phosphorus for the current method.

The sample is heated with teflon boiling balls in the presence of sulfuric acid, potassium sulfate and mercuric sulfate for 3.5 hours. The residue is cooled, diluted to original volume and analyzed for ammonia. The ammonia determination is based on a colorimetric method in which an emerald-green color is formed by the reaction of ammonia with sodium salicylate, sodium nitroprusside and sodium hypochlorite in a buffered alkaline medium at a pH of 12.8 - 13.0 to form an ammonia salicylate complex.

Methodology

USEPA. 1979. Method No. 351.2 *in* Methods for chemical analysis of water and wastes. United States Environmental Protection Agency, Office of Research and Development. Cincinnati, Ohio. Report No. EPA-600/4-79-020 March 1979. 460pp.

Instrumentation

Technicon AutoAnalyzer II

Manifold Assembly

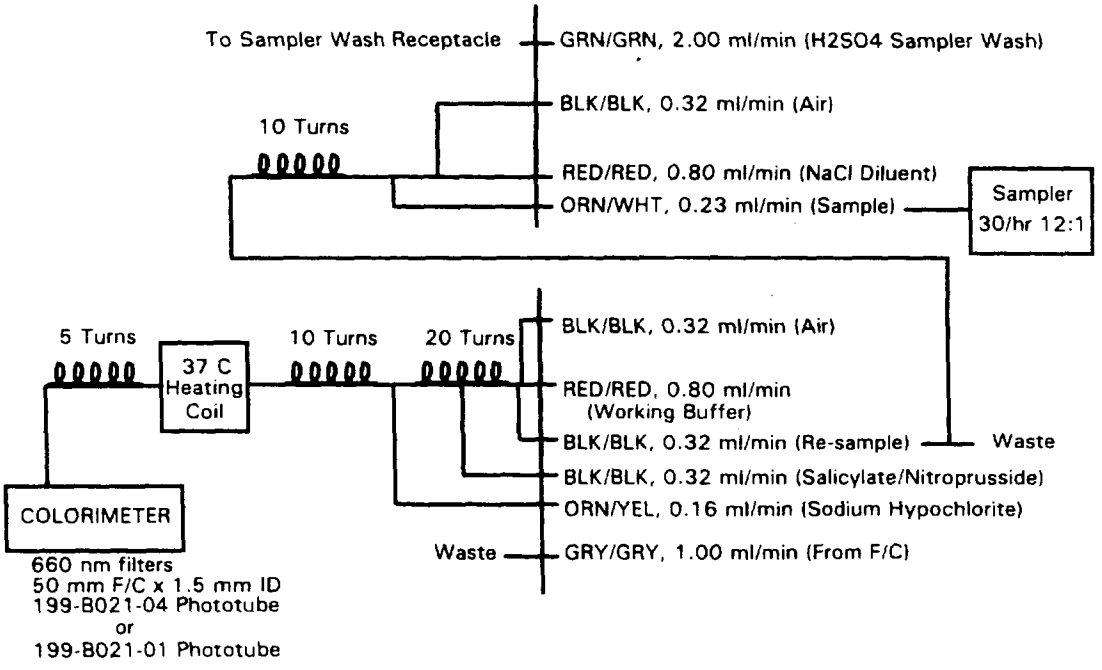

Figure 12. Manifold assembly for Kjeldahl nitrogen method.

Specifications

Standard Calibration Setting: 6.0
Damp: Normal
Sample Rate: 40/hour, 9:1 sample/wash ratio
Filter: 660 nm
Phototube: 199-B021-04 or 199-B021-01
Flowcell: 50 mm
Interferences: None

Digestion Reagents

Stock Mercuric Sulfate

Mercuric oxide (HgO), red	8 g
Sulfuric acid (H_2SO_4), concentrated (sp. gr. 1.84)	10 ml
Deionized water, q.s.	100 ml

In a 100 ml volumetric flask, dissolve 8 g of mercuric oxide in ~80 ml of deionized water. Add 10 ml of concentrated sulfuric acid. Dilute to 100 ml with deionized water.

Digestion Solution

Potassium sulfate (K_2SO_4)	133 g
Sulfuric acid (H_2SO_4), concentrated (sp. gr. 1.84)	200 ml
Stock Mercuric Sulfate	25 ml
Deionized water, q.s.	1000 ml

In a 1000 ml volumetric flask, dissolve 133 g of potassium sulfate in ~500 ml of deionized water and slowly add 200 ml concentrated sulfuric acid. Add 25 ml of Stock Mercuric Sulfate, let cool and dilute to 1000 ml with deionized water.

Digestion Procedure

1. Add 25 ml of sample to each graduated digestion tube.
2. Add 5 ml of Digestion Solution and 2 teflon boiling balls (Fisher Scientific) to each tube and mix with a vortex mixer.
3. Insert silicone rubber air tight plugs in the digestion tubes whenever not being heated.
4. Heat tubes in a block digester at 200°C for 1 hour and then at 360°C for 2.5 hours.
5. Remove tubes from digester and allow to cool for 15 minutes Add ~15 ml of deionized water to each tube to dissolve any precipitate, then cap. Allow to stand overnight.
6. Dilute samples to 25 ml with deionized water.
7. Analyze on AutoAnalyzer II.
8. Clean digestion tubes by boiling 25 ml of deionized water to dryness at 200°C. A rinse with 20% sodium hydroxide (NaOH) followed by several rinses with deionized water may be necessary.

Analysis Reagents

Sulfuric Acid Sampler Wash Solution

Potassium sulfate (K_2SO_4)	34 g
Sulfuric acid (H_2SO_4), concentrated (sp. gr. 1.84)	50 ml
Deionized water, q.s.	1000 ml

In a 1000 ml volumetric flask, dissolve 34 g of potassium sulfate in ~800 ml of deionized water. Slowly add 50 ml of concentrated sulfuric acid and dilute to 1000 ml with deionized water.

Sodium Chloride Diluent Solution

Sodium chloride (NaCl)	10 g
Deionized water	1000 ml

In a 1000 ml volumetric flask, dissolve 10 g of sodium chloride in ~600 ml of deionized water. Dilute to 1000 ml with deionized water.

Sodium Hydroxide Solution

Sodium hydroxide (NaOH)	200 g
Deionized water	1000 ml

In a 1000 ml volumetric flask, carefully and slowly add 200 g of sodium hydroxide to ~600 ml deionized water. Wear eye protection. High heat will be liberated. After the solution has cooled, dilute to 1000 ml with deionized water.

Sodium Salicylate/Sodium Nitroprusside Solution

Sodium salicylate ($HOC_6H_4CO_2Na$)	70 g
Sodium nitroprusside [$Na_2Fe(CN)_5NO \cdot 2\ H_2O$]	0.3 g
Deionized water	1000 ml
Brij-35 (Bran + Luebbe No. T21-0100-06), 30%	1 ml

In a 1000 ml volumetric flask, dissolve 70 g of sodium salicylate and 0.3 g of sodium nitroprusside in ~800 ml of deionized water. Dilute to 1000 ml with deionized water and add 1 ml of 30% Brij-35.

Sodium Hypochlorite Solution

Sodium hypochlorite (Clorox)	12 ml
Deionized water, q.s.	200 ml

In a 200 ml volumetric flask, dilute 12 ml of Clorox to 200 ml with deionized water.

Stock Buffer Solution

Sodium phosphate, dibasic ($Na_2HPO_4 \cdot 7\ H_2O$)	134 g
Sodium hydroxide (NaOH)	20 g
Deionized water	1000 ml

In a 1000 ml volumetric flask, heat to dissolve 134 g of sodium phosphate, dibasic in ~800 ml deionized water. Add 20 g of sodium hydroxide and dilute to 1000 ml with deionized water.

Working Buffer

Sodium potassium tartrate ($KNaC_4H_4O_6 \cdot 4\ H_2O$)	50 g
Stock Buffer Solution	200 ml
Sodium Hydroxide Solution	100 ml
Deionized water, q.s.	1000 ml
Brij-35 (Bran + Luebbe No. T21-0100-06), 30%	0.3 ml

In a 1000 ml volumetric flask, dissolve 50 g sodium potassium tartrate in ~600 ml deionized water. Add 200 ml of Stock Buffer and 100 ml Sodium Hydroxide Solution. Dilute to 1000 ml with deionized water and add 0.3 ml of 30% Brij-35.

Analysis Procedure

1. With the system pumping and deionized water flowing through the system, add all reagent lines except the Sodium Salicylate/Sodium Nitroprusside line. After 10 minutes, add the Sodium Salicylate/Sodium Nitroprusside line. If the pH of the flow stream is low, a precipitate will form. Presence of precipitate requires corrective action (re-make reagents, check for clogged lines, replace worn pump tubes, etc.).

2. Prepare standards and blanks in exactly the same manner as samples, including the digestion procedure.

TOTAL AND DISSOLVED ORGANIC AND INORGANIC CARBON

Revised 1/97

Two methods are available for the analysis of total and dissolved organic carbon. The OI Model 700 uses persulfate oxidation and is used for freshwater samples only. The Shimadzu 5000 utilizes high temperature combustion and is used to analyze all ranges of salinity.

OI ANALYTICAL MODEL 700 TOC ANALYZER METHOD

Total inorganic carbon (TIC) is determined by the measurement of carbon dioxide (CO_2) released by acidification of a sample. As pH decreases, carbonate and bicarbonate ions are converted to dissolved CO_2. The CO_2 is purged from solution, concentrated by trapping on a molecular sieve column, then desorbed and carried into a non-dispersive infrared analyzer (IR). The IR is calibrated to display the mass of TIC in the sample. The sample TIC concentration equals the mass of TIC in the sample divided by the sample volume.

Total organic carbon (TOC) is determined by the measurement of CO_2 released by chemical oxidation of organic carbon in a sample, following the purging of TIC by acidification. When sodium persulfate ($Na_2S_2O_8$), a strong oxidizer, is added, the oxidant quickly reacts with organic carbon in the sample at 100°C to form CO_2. When the oxidation reaction is complete, CO_2 is purged from solution, concentrated by trapping on a molecular sieve column and detected as described for TIC.

Methodology

Menzel, D.W. and R.F. Vaccaro. 1964. The measurement of dissolved organic and particulate carbon in seawater. Limnol. Oceanogr. 9:138-142.

Instrumentation

The OI Analytical Model 700 TOC Analyzer is a totally automated system for analyzing aqueous samples for TOC, TIC, total carbon (TC) and dissolved organic carbon (DOC). A single-beam photometric system in the IR minimizes influences due to vibration and contamination of the measuring cell. Its features dramatically improved long-term stability and signal-to-noise ratio over conventional dual-beam analyzers. The single-beam photometric system requires no optical balance adjustment.

Specifications

Analytical Range: Depends on sample volume. TOC: 4 parts per billion (ppb) to 10,000 parts per million (ppm) C; TIC: 1 ppb to 10,000 ppm C
Precision: TOC: ± 2% or 2 ppb C (greater value); TIC: ± 1% or 0.5 ppb C (greater value)
Calibration: Linear range of 0 - 50 μg C
Single-point calibration is from a prepared standard introduced by the sample loop or syringe injection. The OI Analytical Model 700 TOC Analyzer is factory calibrated over a linear range of 0 - 50 μgC.

Oxidant Volume: 3000 µl for estuarine and seawater samples; 1000 µl for distilled water only
Acid Volume: 300 µl
Sample Volume: This volume is equal to the size of the sample loop. Refer to loop tag for exact volume.
Extended Reaction: 3 minutes and 30 seconds in a salt water matrix

Reagents

Sodium Persulfate

Sodium persulfate, $Na_2S_2O_8$	100 g
Deionized water, boiling	1000 ml

Heat 1000 ml of deionized water to boiling. Add 100 g of sodium persulfate to an empty 1000 ml reagent bottle. Fill bottle with ~1000 ml of boiling deionized water, cap and shake. Quickly filter the hot reagent through a 47 mm Whatman GF/F filter. After filtering, immediately place the reagent bottle in an ice bath or cold running water bath until cooled to room temperature. Make fresh reagent every week. Use of old reagent may result in high blanks.

Phosphoric Acid. 5%

Phosphoric acid (H_3PO_4), concentrated	59 ml
Deionized water, q.s.	1000 ml

To a 1000 ml volumetric flask, add 59 ml of concentrated phosphoric acid to ~800 ml of deionized water. Dilute to 1000 ml with deionized water.

Standards

Stock Sodium Carbonate Standard, 1000 mg/l

Sodium carbonate (Na_2CO_3), dried at 45°C	4.413 g
Deionized water	500 ml

In a 500 ml volumetric flask, dissolve 4.413 g of sodium carbonate in ~400 ml of deionized water. Dilute to 500 ml with deionized water. Refrigerate. Make fresh every 6 months or if an increase in standard average is noted.

Stock Potassium Hydrogen Phthalate (KHP) Standard, 1000 mg/l

Potassium hydrogen phthalate ($HOCOC_6H_4COOK$), dried at 45°C	1.064 g
Deionized water	500 ml

In a 500 ml volumetric flask, dilute 1.064 g of potassium hydrogen phthalate in ~400 ml of deionized water. Dilute to 500 ml with deionized water. Refrigerate. Make fresh every 6 months or if an increase in standard average is noted.

Operation of the OI Analytical Model 700 TOC Analyzer

Start-up

1. Turn on the nitrogen gas (zero grade or better) by the main valve on the tank. The valve on the regulator should be set to ~30 - 32 psi.

2. Turn on the 700 system. The instrument will be in STANDBY mode for about 10 minutes. Continuous STANDBY indicates a problem. Default values and last values (blanks, sample volume, etc.) will be entered automatically.

3. Fill reagent bottles and allow reagents to begin purging.

4. When the instrument enters READY mode, it is ready to run reagent blanks.

5. To start running blanks, push RUN/STOP. Run blanks for several hours or overnight.

6. When blank values have stabilized, average the last 3 or 4 runs and add the values to the existing blank values. Blank values range from 1.00 - 2.75 mV for TIC. Blank values exceeding 3.00 mV are unacceptable. For TOC, blank values range from 8.00 - 13.00 mV. High TOC blanks often result from old oxidant. Make fresh oxidant if high blank values persist.

Running the Calibrating Standard (10 ppm Na_2CO_3/10 pm KHP)

1. Make fresh standard weekly. Dilute 5 ml of each Stock Solution to 500 ml with deionized water. Keep refrigerated.

2. Load standard into the autosampler and run.

3. After the last standard is printed, press CLEAR. The mV output for the 10/10 ppm standard should be ~215 mV and the scaling factor should be between 0.04500 and 0.05500 (0.0500 is optimal). Standard average mV output is inversely proportional to the scaling factor.

4. Average the responses of each replicate and enter the value in CALIBRATION CONSTANTS (select DISPLAY MODE and SELECT NEXT DISPLAY to STD AVG). This value will automatically be calculated to the current scaling factor.

5. After the values are entered, use SELECT DISPLAY MODE to return to the run sequence.

6. Run a range of standards before running samples. Keep standards refrigerated. Standards are good for 1 - 2 weeks.

7. Load samples into the autosampler and run.

8. Shut down the system if no samples are to be run for >24 hours. Turn the instrument off at the power switch. Turn off the gas at the main tank valve.

Sample Handling

Thaw samples at room temperature. Shake samples well before loading and note any particulates.

Quality Assurance/Quality Control

Sample Spikes

A total of 5% of samples should be sample spikes. To prepare a spike, combine 1 ml of 5 ppm KHP and 9 ml of sample in an autosampler vial.

Standard Checks

Run 2 ppm KHP and 5 ppm KHP standards as samples approximately every 12 samples.

Calibration Constants

Use SELECT DISPLAY MODE to reach CALIBRATION CONSTANTS. Use SELECT NEXT DISPLAY to prompt the screen.

- Reagent Blanks are reported in mV.
- Standard Mass (μg C) = Calibrating Standard Concentration x Sample Volume
- Standard Average = Average mV response of the Calibrating Standard
- Scaling Factor = Standard Mass (μg C) / Standard Average (mV)

Normal Maintenance

1. Check for leaks after changing the nitrogen gas cylinder.

2. Check the IR output daily. The optimum working range is 0 - 20 mV. During a run, the best time to check the IR output is during the extended reaction. It can be adjusted during this time.

3. Deionized water should be run through the system occasionally to remove dried reagents from the walls of the digestion vessel. Use a large sample loop and cycle deionized water for several hours.

NOTE: Deionized water containing <200 ppb C is recommended.

SHIMADZU TOC-5000 TOTAL ORGANIC CARBON ANALYZER METHOD

Methodology

Sugimura, Y. and Y. Suzuki. 1988. A high temperature catalytic oxidation method for the determination of non-volatile dissolved organic carbon in seawater by direct injection of a liquid sample. Mar. Chem. 24:105-131.

Instrumentation

The Shimadzu TOC-5000 uses a high temperature combustion method to analyze aqueous samples for TIC, TOC and non-purgeable organic carbon. Samples are treated with hydrochloric acid and sparged with ultra pure carrier grade air to drive off inorganic carbon. High temperature combustion (680°C) on a catalyst bed of platinum-coated alumina balls breaks down organic carbon into carbon dioxide (CO_2). The CO_2 is carried by ultra pure air to a non-dispersive infrared detector (NDIR) where CO_2 is detected.

Specifications

Analytical Range: 100 ppb - 4000 ppm using 250 μl syringe and 4 - 250 μl injection volume
Calibration: Up to 4 concentrations may be used to calibrate the instrument

Reagents

Hydrochloric Acid, 2 N

Hydrochloric acid (HCl), concentrated	166 ml
Deionized water, q.s.	1000 ml

In a 1000 ml volumetric flask, add 166 ml of concentrated hydrochloric acid to ~600 ml of deionized water. Dilute to 1000 ml with deionized water.

Standard

Stock Potassium Hydrogen Phthalate (KHP) Standard, 1000 mg/l

Potassium hydrogen phthalate ($HOCOC_6H_4COOK$), dried at 45°C	2.125 g
Deionized water	1000 ml

In a 1000 ml volumetric flask, dissolve 2.125 g of potassium hydrogen phthalate in ~800 ml of deionized water. Dilute to 1000 ml with deionized water. Make fresh every 4 - 6 months. Store at 4°C.

Procedure

1. Samples are stored frozen at -20°C. When ready to analyze, thaw samples at room temperature and transfer to autosampler vials.

2. Make 3 working standards (generally <20 mg/l) from the Stock KHP Standard and load into autosampler. Use deionized water as the zero concentration.

3. The autosampler adds 50 µl of 2 N Hydrochloric Acid to each sample vial and 200 µl of 2 N Hydrochloric Acid to each standard vial.

4. The standards and samples are sparged with ultra pure carrier (UPC) grade air for 6 minutes at 60 ml/minute, driving off any inorganic carbon in the sample.

5. Standards and samples are injected onto a catalyst bed of platinum-coated alumina balls and combusted at 680°C. The resulting CO_2 gas is carried to the NDIR detector by the UPC grade air.

6. For the standard curve, use the area of the deionized water as the water blank in calculating the 4 standard concentrations.

7. Calculate a linear regression of the 4 standard concentrations, shifted through zero.

8. The absolute value of the y-intercept is an indicator of the instrument blank and is subtracted from the area of the samples. The water blank includes the instrument blank, so only one value is subtracted from the standards.

Calculation of TOC

TOC concentration is calculated using the following equation:

$$\text{mg } TOC/l = \frac{(A_s - \|b\|)}{m}$$

where: A_s = area of the sample,
b = y-intercept, and
m = slope of the regression line.

PARTICULATE ANALYTES

Rationale

The direct measurement of particulate carbon, particulate nitrogen and particulate phosphorus is the preferred method used by the Nutrient Analytical Services Laboratory. A large volume can be filtered onto the pad, yielding a representative sample. The alternative, subtraction of the dissolved concentrations from the total sample concentration to determine the particulate carbon concentration, often yields negative values. Direct measurement is rapid, sensitive and more precise.

Instrumentation

Particulate phosphorus and biogenic silica procedures require the use of a segmented continuous flow analyzer such as the AutoAnalyzer II, previously described in the section Dissolved Inorganic Analytes. Particulate carbon and particulate nitrogen procedures require the use of an elemental analyzer.

Sampling and Storage

A known volume of the collected water is filtered through Whatman GF/F filters (25 mm for particulate carbon and nitrogen, and 47mm for particulate phosphorus, nominal pore size 0.7 μm). The filter is folded, placed in an aluminum foil pouch and frozen until analysis. For biogenic silica, water is filtered through a 0.4 μm Nuclepore polycarbonate filter. The filter is placed in a 50 ml plastic centrifuge tube and stored at room temperature.

Sediment samples are collected, dried and ground with a mortar and pestle to thoroughly blend the sample.

PARTICULATE CARBON AND NITROGEN

Revised 1/97

Samples are combusted in pure oxygen (O_2) under static conditions. Products of combustion are passed over suitable reagents in the combustion tube where complete oxidation occurs. In the reduction tube, oxides of nitrogen (N) are converted to molecular N. The carbon dioxide (CO_2), water vapor and N are mixed and released into the thermal conductivity detector where the concentrations of the sample gases are measured.

Instrumentation

Exeter Analytical, Inc. (EAI) CE-440 Elemental Analyzer

Operating Principles

- Carbon (as CO_2), hydrogen (as H_2O) and nitrogen (N_2) content in organic and inorganic compounds can be determined.
- Combustion of the weighed or filtered sample occurs in pure O_2 under static conditions (Figure 13).

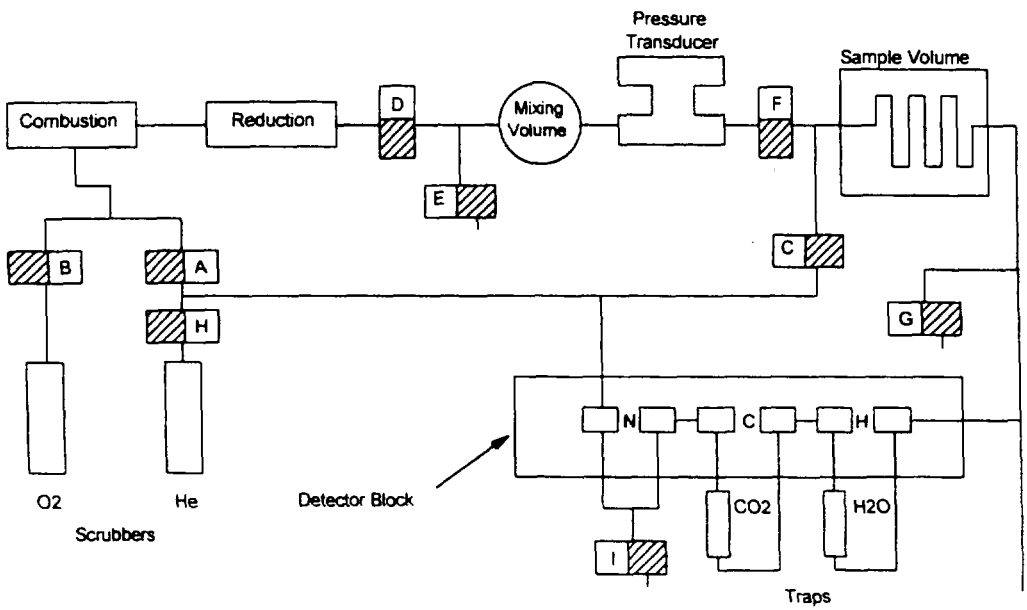

Figure 13. Schematic diagram of the Exeter Analytical, Inc. (EAI) CE-440 Elemental Analyzer.

- Helium (He, ultra-pure carrier grade) carries the combustion products through the analytical system to the atmosphere. Helium also purges the instrument.

- Solenoids A - G control the gas flow through the system. Valves H and I are used for automatic leak testing.

- Products of combustion pass over suitable reagents in the combustion tube where complete oxidation occurs.

- In the reduction tube, oxides of N are converted to molecular N. The CO_2, water vapor and N are then flushed into a mixing volume where they are thoroughly homogenized at a precise volume, temperature and pressure. The mixture is released through the sample volume into the thermal conductivity detector.

- Between the first of three pairs of thermal conductivity cells, an absorption trap removes water (H_2O) from the sample gas. The differential signal read before and after the trap reflects the amount of hydrogen (as H_2O) in the original sample. A similar measure is made of the signal output of a second pair of thermal conductivity cells between which a trap removes CO_2. The remaining gas consists only of N_2 and He. This gas passes through a thermal conductivity cell and the output signal is compared to a reference cell through which pure He flows. This gives the N_2 concentration.

Standard

Standard is acetanilide ($CH_3CONHC_6H_5$) stored at 45°C. Composition of acetanilide is 71.09% C, 6.71% H and 10.36% N.

Procedure

1. Filter a known volume of sample water through a Whatman GF/F filter pad (25 mm; 0.7 µm pore size; pre-combusted at 550°C for 90 minutes and cooled to room temperature in a dessicator). Filter samples in duplicate for back-up and 10% QA/QC.

2. Fold filter pads in half inward, and place in an aluminum foil pouch. Label and freeze for later analysis.

3. When ready for analysis, remove aluminum foil pouches from freezer and place in a drying oven at 45°C overnight.

4. Load nickel sleeves (pre-combusted at 875°C for 90 minutes and cooled to room temperature) into the filter ram. Load filter pads into the nickle sleeves. Place loaded nickel sleeves into the sample wheel.

5. Dry sediment samples at 45°C overnight and weigh into aluminum capsules (pre-combusted at 550°C for 90 minutes and cooled to room temperature). Load nickel sleeves into the sample wheel and place aluminum capsules containing the sediment samples into the nickel sleeves.

6. Load standards (~1500 µg acetanilide) and blanks (empty capsule for standards and weighed samples; filter pad for filtered samples) into the sample wheel. Approximately 50 samples can be run per day.

7. Place 3 standards at the beginning of each run to determine the K-Factor.

8. Insert standard checks between every 15 - 20 samples and at the end of each run.

The Run Cycle

1. At the start of each run, the entire system is flushed with helium (He) at a high flow rate while the sample is in the cool zone.

2. The injection box is automatically purged using the P valve.

3. The combustion train is filled with O_2 and the sample is injected.

4. Shortly after sample injection, D valve closes to seal off the combustion train from the rest of the analytical system that is still being flushed with He.

5. Combustion occurs under static conditions in an excess of O_2 at about 975°C. During this time, the mixing volume is being purged with E and F valves open.

6. Valve F closes to allow the pressure in the mixing volume to reach atmospheric pressure.

7. Close to the end of the combustion period, a high-temperature heating coil around the combustion tube vaporizes any condensates at the entrance of the combustion tube that may have been produced by diffusion of the sample during initial stages of combustion.

8. To assure complete combustion, the ladle is retracted ~1 inch, a small amount of O_2 is added and the ladle is fully injected.

9. During high heat, valve E closes, A and D re-open and the combustion products are completely flushed from the combustion train into the mixing volume.

10. When a pressure of 1500 mm Hg is reached, valve D closes, trapping the sample gas in the mixing volume. The time required to reach this pressure is called "fill time" and is usually 20 - 50 seconds.

11. The combustion train remains under positive pressure until the end of the complete cycle.

12. While the sampling gases are mixing, pure He flows from valve C through the sample volume and through the detectors.

13. The signal from each detector bridge is read and stored in memory to provide a baseline reading with no sample gas in the detector.

14. After mixing is complete and baseline reading is set, F and G open allowing the sample gas captured in the mixing volume to expand through the sample volume to the atmosphere. During this time, valve C is closed and there is low flow through the detector.

15. When sample gases are near atmospheric pressure, valves F and G close and C opens. The H_2O, CO_2 and N_2 concentrations of the sample are measured by displacing the sample gas through the detectors to the atmosphere.

16. The volume of sample gas in the system is large enough so that the He flow allows measurement of the contents of each detector in sequence, under steady-state conditions.

17. The sample gas passes through the detectors at a constant flow, pressure and temperature. This eliminates any variation in water vapor concentration due to changes in water adsorption on the walls of the pneumatic system.

18. While the sample gas is displaced through the detectors, the output signals are recorded.

19. The difference in microvolts (μV) between each "read" signal and the baseline ("zero") level for the same detector is directly proportional to the concentration of the sample gas measured.

20. At the end of a cycle, the exhaust valves open to allow the sample gases to escape to the atmosphere.

21. The computer then prints out the calculated results, places the instrument in standby with C valve open and waits for the next command.

22. With the HA automatic injector, the results are printed after each run. The run cycle continues until the pre-selected number of

runs have been completed.

Definition of Terms

Blank: Blank value = blank read (see Read Signal below) minus blank zero (see Zero Value below).

Capsule: Pre-combusted aluminum or nickel container. Used for sealing samples with an accurate weight and maintains integrity prior to combustion.

Combustion Time: Time for sample to fully combust in O_2 environment.

Combustion Tube: Quartz tube used for packing reagents and for sample combustion.

Conditioner: Coats the walls of the system surfaces, particularly the mixing and sample volumes, with H_2O vapor, CO_2 and N_2 that simulate actual sample running conditions. The conditioner we use is acetanilide as recommended by the manufacturer. A sample is considered conditioner when placed before a blank or a standard in a run. Blanks should be run immediately after a conditioner.

Detector: The heart of the analyzer consisting of three bridges. Determines the percentages of C, H and N in the sample via thermal conductivity.

Detector Oven: Keeps the temperature of the detector, pressure transducer, mixing volume and sample volume constant.

Double Drop: On HA automation, two samples are dropped for one run used for >25 mm filters. Sample ID requires a "+" prefix.

Fill Time: Time required to build up the pressure in the mixing volume to 1500 mm Hg.

Furnace: Heats the reduction and combustion tubes to operating temperature.

Injection: Moving the ladle into the combustion furnace.

Injection Box: For the HA automation, the box assembly that houses the sample wheel.

K-Factor: Instrument sensitivity factor in μV/μg, calibrated using a chemical standard.

Ladle: Transports the boat or capsule containing the sample into the combustion furnace.

Mixing Volume: Spherical bottle in which sample gases become homogenous.

Mother Board: The main circuit board. Where all CE-440 power supplies are located.

Read Signal: Steady-state signal produced by the detector when sample gases are present in stable concentration.

Reduction Tube: Quartz tube with reduced copper that removes excess O_2 from the sample gas and reduces

oxides of N_2 to free N.

Run: One sample analysis from start to finish, including print-out.

Run Cycle: The entire analytical sequence of runs from the first run to the last run in a day, including the transfer of the run cycle data to the disk.

Sample Volume: Tube where sample gas is exhausted from the mixing volume prior to entering the detector.

Scrubbers: Removes water and CO_2 from gas supplies.

Traps: Used for removing water and CO_2 from the sample gas.

Zero Value: Bridge signal with only pure He flowing through the detector.

Calibration

The following formula is used to calculate K-Factors, as well as C, N and H concentrations in unknown samples:

$$\% = \frac{(R - Z - B)}{K \times W} \times 100$$

where:
- K = calibration factor of the instrument,
- W = sample weight,
- R = read signal of sample gas,
- Z = zero reading or instrument baseline, and
- B = blank signal (instrument, ladle and capsules).

Always run a conditioner before a standard and before and after a blank.

K-Factors vary greatly among instruments but should be within the following ranges:

K_C = 18 - 25
K_H = 55 - 76
K_N = 7 - 10

PARTICULATE PHOSPHORUS

Revised 1/97

Ammonium molybdate and antimony potassium tartrate react in an acid medium with dilute solutions of phosphorus to form an antimony-phospho-molybdate complex which is reduced to an intensely blue-colored complex by ascorbic acid. Color is proportional to phosphorus concentration.

Methodology

Aspila, I., H. Agemian and A.S.Y. Chau. 1976. A semi-automated method for the determination of inorganic, organic and total phosphate in sediments. Analyst 101:187-197.

Instrumentation

Technicon AutoAnalyzer II with IBM compatible Labtronics Inc. DP500 Software data collection system

Manifold Assembly

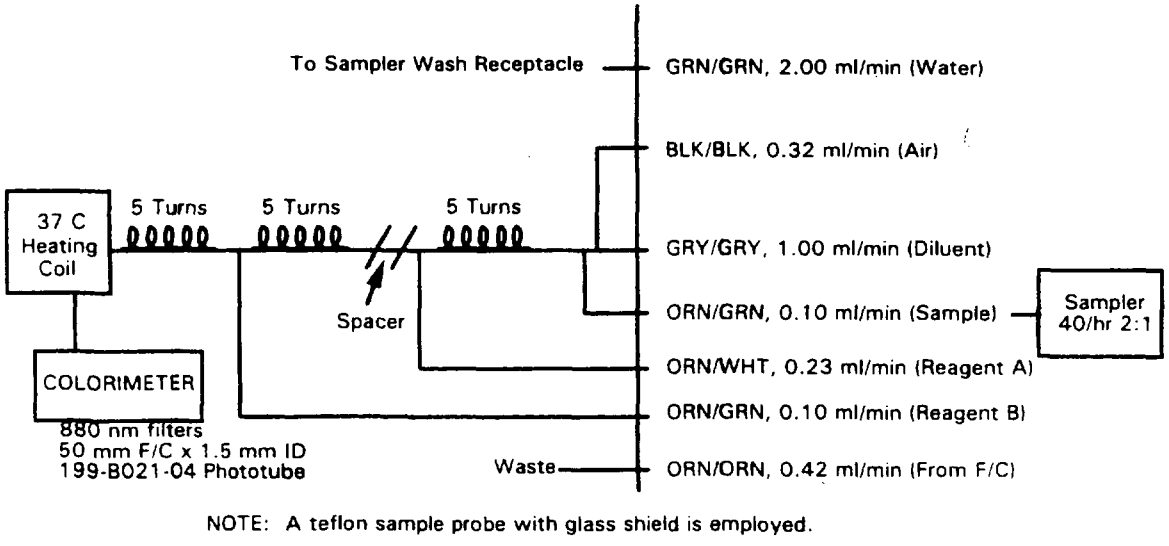

NOTE: A teflon sample probe with glass shield is employed.

Figure 14. Manifold assembly for particulate phosphorus method.

Specifications

Standard Calibration Setting: 4.0
Damp: Normal
Sample Rate: 40/hour, 2:1 sample/wash ratio
Filter: 880 nm
Phototube: 199-B021-04
Flowcell: 50 mm
Relative Absorbance (48 μM P): ~.27

Interferences: Silicon (Si) at analysis temperature >40°C and/or <2.2 N sulfuric acid in the mixed reagent solution causes interference in the concentration range of >0.05 mg/ml Si in the extract. These conditions are avoided by maintaining an acid concentration of 2.45 N sulfuric acid in the reagents and analysis at 37°C.

Reagents

Hydrochloric Acid, 1 N

Hydrochloric acid (HCl), concentrated (sp. gr. 1.9)	86 ml
Deionized water, q.s.	1000 ml

In a 1000 ml volumetric flask, add 86 ml of concentrated hydrochloric acid to ~800 ml of deionized water. After cooled, dilute to 1000 ml with deionized water.

Deionized Water Diluent

Sodium dodecyl sulfate, (SDS) [$CH_3(CH_2)_{11}OSO_3Na$; m.w. = 288.38; phosphate ≤0.0001 %]	0.05 g
Deionized water	500 ml

Add 0.05 g of sodium lauryl sulfate to 500 ml deionized water. Mix well.

Sulfuric Acid Solution , 4.9 N

Sulfuric acid (H_2SO_4), concentrated (sp. gr. 1.84)	136 ml
Deionized water, q.s.	1000 ml

To a 1000 ml volumetric flask, add 136 ml of concentrated sulfuric acid to approximately 800 ml of deionized water while cooling (cold water bath). After the solution is cooled, dilute to 1000 ml with deionized water.

Ammonium Molybdate Solution

Ammonium molybdate [$(NH_4)_6Mo_7O_{24} \cdot 4\ H_2O$]	40 g
Deionized water	1000 ml

In a 1000 ml volumetric flask, dissolve 40 g of ammonium molybdate in 800 ml of deionized water. Dilute to 1000 ml with deionized water. Store in plastic bottle away from direct sunlight.

Ascorbic Acid Solution

Ascorbic acid ($C_6H_8O_6$)	18 g
Deionized water	1000 ml

In a 1000 ml volumetric flask, dissolve 18 g of ascorbic acid in 800 ml of deionized water. Dilute to 1000 ml with deionized water and dispense ~40 ml into clean polybottles and freeze. Thaw overnight in the refrigerator before use.

Antimony Potassium Tartrate Solution

Antimony potassium tartrate [$K(SbO)C_4H_4O_6 \cdot \frac{1}{2}\ H_2O$]	3 g
Deionized water	1000 ml

In a 1000 ml volumetric flask, dissolve 3 g of antimony potassium tartrate in 800 ml deionized water. Dilute to 1000 ml with deionized water.

Working Reagents

Reagent A

Sulfuric Acid Solution, 4.9 N	50 ml
Ammonium Molybdate Solution	15 ml
Antimony Potassium Tartrate Solution	5 ml
SDS	0.15 g

Reagent B

Ascorbic Acid Solution	30 ml
SDS	0.05 g

Standards

Stock Phosphorus Standard, 12,000 µM

Potassium phosphate, monobasic (KH_2PO_4), dried at 45°C	1.632 g
Deionized water	1000 ml
Chloroform ($CHCl_3$)	1 ml

In a 1000 ml volumetric flask, dissolve 1.632 g of potassium phosphate in ~800 ml of deionized water. Dilute to 1000 ml with deionized water. Add 1 ml of chloroform to act as a preservative (1 ml contains 12 µmoles P).

Working Phosphorus Standards

Dilute 0.05, 0.1, 0.2, 0.3 and 0.4 ml of Stock Phosphorus Standard to 100 ml with 1 N Hydrochloric Acid to yield concentrations of 6 µM P/l (0.185 mg P/l), 12 µM P/l (0.37 mg P/l), 24 µM P/l (0.74 mg P/l), 36 µM P/l (1.11 mg P/l) and 48 µM P/l (1.48 mg P/l), respectively.

Procedure

1. Filter a known volume of water through a Whatman GF/F filter (47 mm; 0.7 µm pore size, pre-dried at 103 - 105°C for 24 hours). Using forceps, fold filter papers in half, sample inside, and place in an aluminum foil pouch. Collect sediment samples in a clean container.

2. Freeze aluminum foil pouches and/or sediments.

3. If filters are used also for Total Suspended Solids dry overnight at 103-105°C. Dry sediments at 50°C overnight or until dry. Grind sediment samples to blend thoroughly.

4. Fold filters in quarters using forceps and place in numbered crucibles with lids. Weigh sediment into crucibles. In our laboratory, generally about 25 mg of sediment is used. Cover crucibles. Record sample numbers and corresponding crucible numbers. Prepare 5% of samples in duplicate.

5. Muffle crucibles at 550°C for 90 minutes.

6. When crucibles are cool, remove from muffle furnace. Place filter or sediment in a labelled 50 ml plastic screw cap centrifuge tube.

7. Add 10 ml of 1 N Hydrochloric Acid to each tube containing a filter. For sediments, add 20 ml to each tube.

8. Cap tubes and let stand for a minimum of 24 hours. Shake tubes several times during the 24-hour period.

9. Transfer supernatant to an AutoAnalyzer cup with a Pasteur pipette.

10. Analyze for phosphate using an AutoAnalyzer II system. Spike 5% of samples 1:1 with 1.11 mg P/l standard solution and analyze.

11. Blank filter papers should be carried through the procedure above. In our laboratory, we use 1 Blank per ~20 samples.

Calculation of Phosphorus Concentration

Phosphorus concentration is calculated using Labtronics Inc. DP500 software. The calculation is based on the following equation:

$$\text{mg P/l} = \frac{[(\%\ \text{on AA Chart}) - B] \times F \times V_E}{V_F}$$

where: B = mean reading of blanks,
F = inverse of the regression slope of the standards,
V_E = volume of hydrochloric acid used for extraction (l) (i.e., 0.01 for filters and 0.02 for sediments), and
V_F = volume of sample filtered (l).

Technicon AutoAnalyzer II with 50 mm flowcell and STD CAL setting of 4.0 typically gives the following results:

slope	43.63
r^2	0.9999

PARTICULATE BIOGENIC SILICA

Revised 1/97

Silicomolybdate is reduced in acid solution to "molybdenum blue" by ascorbic acid. Oxalic acid is added to eliminate interference from phosphates. Detection of the silicomolybdate complex is by colorimetry.

Methodology

Technicon Industrial Method No. 186-72W/B†. Technicon Industrial Systems. Tarrytown, New York, 10591.

Paasche, E. 1973. Silicon and the ecology of marine plankton diatoms. I. *Thalassiosira pseudonana (Cyclotella nana)* grown in a chemostat with silicate as limiting nutrient. Mar. Biol. 19:117-126.

Instrumentation

Technicon AutoAnalyzer II with IBM compatible Labtronics Inc. DP500 Software data collection system

Manifold Assembly

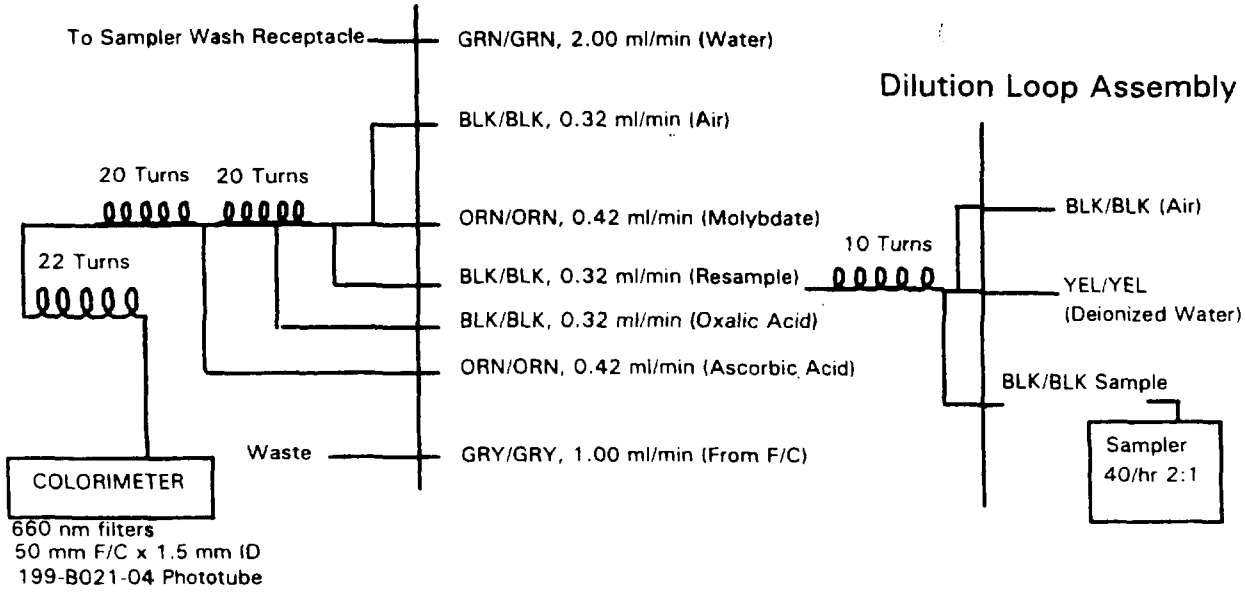

Figure 15. Manifold assembly for particulate biogenic silica method.

Specifications

Standard Calibration Setting: 6.0
Damp: Normal
Sampling Rate: 40/hour, 2:1 sample/wash ratio
Filter: 660 nm
Phototube: 199-B021-04
Flowcell: 50 mm
Relative Absorbance (42 μM Si): ~.23

Interferences: Tannin, large quantities of iron and sulfide, strong coloration and turbidity may interfere.

Digestion Equipment

2 digital timers
100°C water bath
ice bath
centrifuge tube racks
2 polypropylene re-pipettes
2 1000 ml polypropylene volumetric flasks
AutoAnalyzer II system for silicate determination equipped with dilution loop

Digestion Reagents

Sodium Hydroxide , 0.2 N

Sodium hydroxide (NaOH)	8 g
Deionized water	1000 ml

In a 1000 ml polypropylene volumetric flask, dissolve 8 g of sodium hydroxide pellets in ~800 ml of deionized water. Dilute to 1000 ml with deionized water.

Sulfuric Acid Solution, 1 N

Sulfuric acid (H_2SO_4), concentrated (sp. gr. 1.84)	28 ml
Deionized water, q.s.	1000 ml

In a 1000 ml volumetric flask, carefully add 28 ml of concentrated sulfuric acid to ~800 ml of deionized water. When cool, dilute to 1000 ml with deionized water.

Sample Collection

1. Filter a known volume (10 - 500 ml) of water through a 0.4 µm Nuclepore® polycarbonate filter.

2. Fold filter in half, sample inside, and place in a labelled 50 ml polypropylene centrifuge tube, cap and freeze.

Procedure

1. Fill water bath to depth that will cover liquid in tubes and heat to 100°C.

2. Prepare ice bath.

3. To the sample pad in the centrifuge tube, add 10 ml of 0.2 N Sodium Hydroxide from a polypropylene re-pipette. Make sure that the filter pad is covered by the Sodium Hydroxide. Cap the tube leaving it loosened ¼ turn.

4. Place the centrifuge tube in the 100°C water bath for 20 minutes.

5. After 20 minutes, remove the tube from the hot water bath and place in ice bath for 4 minutes.

6. Add 2.5 ml of 1 N Sulfuric Acid Solution to tube to neutralize. Cap and shake.

7. Wait ~20 minutes then transfer extract to an AutoAnalyzer cup using a Pasteur pipette. Avoid particulate pieces. Samples may need to be centrifuged at 5000 rpm for 10 minutes.

8. Analyze for silicon on an AutoAnalyzer II system. In our laboratory, we use a dilution loop to supply the AutoAnalyzer II sample line. The dilution system we use is BLK/BLK sample line at 0.32 ml/minute and YEL/YEL deionized water diluent line at 1.2 ml/minute with the diluted solution then supplying the BLK/BLK re-sample line of the manifold.

9. Digest blanks and standards interspersed with samples. Digest 5% of samples in duplicate and spike 5% of sample duplicates with 0.4 ml of Secondary Silica Standard (2.5 µM Si/ml).

Analysis Reagents

Oxalic Acid Solution

Oxalic acid ($H_2C_2O_4 \cdot 2H_2O$)	50 g
Deionized water	1000 ml

In a 1000 ml volumetric flask, dissolve 50 g of oxalic acid in ~900 ml deionized water and dilute to 1000 ml with deionized water.

Ascorbic Acid Solution

Ascorbic acid ($C_6H_8O_6$), U.S.P. quality	17.6 g
Acetone [$(CH_3)_2CO$]	50 ml
Sodium dodecyl sulfate, (SDS) [$CH_3(CH_2)_{11}OSO_3Na$; m.w. = 288.38; phosphate ≤0.0001 %]	0.3 g
Deionized water, q.s.	1000 ml

In a 1000 ml volumetric flask, dissolve 17.6 g of ascorbic acid in 500 ml of deionized water and 50 ml of acetone. Mix and dilute to 1000 ml with deionized water. Add 0.3 g of sodium lauryl sulfate. Dispense 200 ml aliquots into poly bottles and freeze.

Sulfuric Acid Solution, 0.1 N

Sulfuric acid (H_2SO_4), concentrated (sp. gr. 1.84)	2.8 ml
Deionized water, q.s.	1000 ml

In a 1000 ml volumetric flask, add 2.8 ml of concentrated sulfuric acid to ~800 ml of deionized water. Dilute to 1000 ml with deionized water.

Ammonium Molybdate Solution

Ammonium molybdate [$(NH_4)_6Mo_7O_{24} \cdot 4\ H_2O$]	10 g
Sulfuric Acid Solution, 0.1 N	1000 ml

Dissolve 10 g of ammonium molybdate in 1000 ml of 0.1 N Sulfuric Acid Solution. Store in an amber plastic container in the dark.

Prepare fresh every few days.

Standards

Stock Silica Standard, 10,000 µM

Sodium silicofluoride (Na_2SiF_6), dried at 45°C	1.88 g
Deionized water	1000 ml

In a 1000 ml polypropylene volumetric flask, dissolve 1.88 g of sodium silicofluoride in ~800 ml of deionized water. Dilute to 1000 ml with deionized water (1 ml contains 10 µmoles Si).

Secondary Silica Standard

Stock Silica Standard	25 ml
Deionized water, q.s.	100 ml

In a 100 ml polypropylene volumetric flask, dilute 25 ml of Stock Silica Standard to 100 ml with deionized water (1 ml contains 2.5 µmoles Si).

Working Silica Standards

To labelled 50 ml polypropylene screw cap centrifuge tubes, add 0, 0.1, 0.2, 0.3, 0.4, 0.5 and 0.6 ml of Secondary Silica Standard. Digest standards as samples. After digestion, standard tubes will contain 0, 7.0, 14.0, 21.1. 28.1, 35.1 and 42.2 µg Si, respectively.

NOTE: The use of glassware with this method should be avoided because it may be a source of Si contamination. All chemicals used for reagents and the deionized water should be of good quality and low in Si concentration.

Calculation of Silica Concentration

Silica concentration is calculated using Labtronics Inc. DP500 software. The calculation is based on the following equation:

$$\text{mg Si/l} = \frac{[(\%\ \text{AA on Chart}) - B] \times F}{V}$$

where: B = mean reading of the blanks,
F = inverse of the regression slope of the standards, and
V = volume filtered.

Technicon AutoAnalyzer II with 50 mm flowcell and STD CAL setting of 6.0 typically gives the following results:

slope	1.60
r^2	0.9998

TOTAL SUSPENDED SOLIDS

Revised 1/97

Total suspended solids (TSS) is the retained material on a standard glass filter pad after filtration of a well-mixed sample of water. Results are expressed in mg/l.

Methodology

APHA. 1975. Method 208 D. Total Nonfilterable Residue Dried at 103 - 105 C (Total Suspended Matter) *in* Standard Methods for the Examination of Water and Wastewater, 14th Edition. American Public Health Association. Washington, D.C. 1193pp.

USEPA. 1979. Method No. 160.2 (with slight modification) *in* Methods for chemical analysis of water and wastes. United States Environmental Protection Agency, Office of Research and Development. Cincinnati, Ohio. Report No. EPA-600/4-79-020 March 1979. 460pp.

Specifications

Interferences: Excessive residue may form a water-trapping crust. Sample size should be limited to yield <200 mg of residue.

Sample Collection and Handling

1. Sequentially number Whatman 47 mm GF/F filters (0.7 µm pore size) along the outside edge, where the sample will not pass through, using a fine-tipped marker.
2. Dry filters at 103 - 105°C overnight.
3. Weigh filters to 4 decimal places to obtain pre-weight. Pre-weighed filters are stored in sealed containers until ready for use.
4. Filter a known volume of water through the filter pad (conducted in the field). Rinse filter with deionized water to remove salts. Fold pad in half, sample inside, and place in aluminum foil pouch.
5. Freeze filter pads for storage.

Procedure

1. Dry filters at 103 - 105°C overnight.
2. Weigh filters and record weights.
3. Subsample a portion of the filters and replace them in the drying oven for a minimum of 1 hour.
4. Re-weigh subsampled filters. If there is >0.5 mg weight loss between the first and second weight of the subsampled filter pads, then all filter pads should be re-dried and re-weighed.
5. Repeat steps 3 and 4 as necessary.

Calculation of TSS

TSS concentration is calculated using the following equation:

$$\text{mg TSS/l} = \frac{(W_{post} - W_{pre})}{V}$$

where: W_{post} = dry weight of filter pad after filtering (mg),
W_{pre} = dry weight of filter pad before filtering (mg), and
V = volume of water filtered (l).

CHLOROPHYLL *a* AND PHAEOPIGMENTS

Revised 1/97

Two fluorometric methods are available for analysis of Chlorophyll *a*. Chlorophyll, in a measured volume of water, is concentrated by filtering through a glass fiber filter, and the pigments on the filter are extracted in 90% acetone. Fluorescence is proportional to chlorophyll concentration. In one method, fluorescence of the extract is measured before and after acidification using a fluorometer. In the second method, the fluorometer is equipped with specific wavelength filters which read only emissions from chlorophyll *a*, without interferences from chlorophyll *b* and phaeopigments. Therefore, the sample is not acidified.

Methodology

Strickland, J.D.H. and T.R. Parsons. 1972. A practical handbook of seawater analysis. Bulletin 167 (2nd ed.). Fisheries Research Board of Canada, Ottawa, Canada.

Parsons, T.R., Y. Maita and C.M. Lalli. 1984. Determination of chlorophylls and total carotenoids: Spectrophotometric method. pp. 101 - 112 *in* Parsons, T.R., Y. Maita and C.M. Lalli. A manual of chemical and biological methods for seawater analysis. Pergamon Press, Oxford.

Welschmeyer, N.A. 1994. Fluorometric analysis of chlorophyll *a* in the presence of chlorophyll *b* and phaeopigments. Limnol. Oceanogr., 39: 1985-1992.

Instrumentation

Fluorometer: Sequoia Turner Fluorometer Model 112 calibrated against a spectrophotometer using pure chlorophyll *a* from spinach (Sigma Chemical Company, C 5753).
Excitation filter: Corning CS5-60
Emission filter: Corning CS2-64 coupled with a 10% neutral density filter
Lamp: GE F4T4BL

Welschmeyer Technique:
Fluorometer: Turner Designs Model TD700 calibrated against a spectrophotometer using pure chlorophyll *a* from spinach (Sigma Chemical Company, C 5753).
Excitation Filter: 436 nm
Emission Filter: 680 nm
Lamp: blue, F4T4.5B2 equivalent

Reagents

Acetone, 90%

Acetone [$(CH_3)_2CO$]	900 ml
Deionized water	100 ml

In a 1000 ml volumetric flask, add 900 ml of acetone and dilute to 1000 ml with deionized water.

Hydrochloric Acid, 5%

Hydrochloric acid (HCl), concentrated	5 ml
Deionized water	95 ml

In a 100 ml volumetric flask, add 5 ml of concentrated hydrochloric acid to ~70 ml of deionized water. Dilute to 100 ml with deionized water.

Procedure

1. Filter a known volume of water through a Whatman GF/F filter pad (nominal pore size 0.7 µm). Only a faint color is needed on the pad.
2. Fold pad in half, sample inside, wrap in aluminum foil, label and freeze for analysis within 3 weeks.
3. Before analysis, briefly thaw pads, then place in a 15 ml glass centrifuge tube. Add 10 ml of 90% Acetone.
4. Using a glass rod, grind the filter against the side of the tube until the filter is well ground. Allow the sample to extract for 2 - 24 hours in the dark under refrigeration.
5. Remove tubes from refrigerator and allow to warm to room temperature.
6. Shake tubes, centrifuge at ~1760 rpm for 5 minutes and decant liquid into a 5 ml round cuvette for reading on the fluorometer.
7. If phaeopigments are to be measured, add 2 drops of 5% Hydrochloric Acid and read on the fluorometer again. If using the Welschmeyer technique, **do not** acidify the sample.

Calculation of Chlorophyll *a* and Phaeopigment Concentration

Chlorophyll *a* and phaeopigment concentrations are calculated using the following equations:

$$\mu g \text{ Chlorophyll } a/l = \frac{F_d \times R_b}{V}$$

and

$$\mu g \text{ Phaeopigments}/l = \frac{F_d \times \left(\frac{\tau}{\tau - 1}\right) \times (R_a - R_b)}{V}$$

where:
R_b = fluorometric reading before adding acid,
R_a = fluorometric reading after adding acid,
F_d = door factor (C_a/R_d),
τ = R_b/R_a determined on a calibrating extract, and
V = volume filtered (l).

Calibration of the TD700: Determine the concentration of the chlorophyll *a* stock solution on the spectrophotometer. Use up to 5 standards within the concentration ranges needed, and 1 blank to determine the standard curve.

Calculation for the Welschmeyer Technique:

$$\mu g\ chl\ a/l = \frac{(Reading) \times 10 \times dilution}{mls\ filtered}$$

The instrument can be calibrated to read in concentration. To correct for volume filtered, the below calculation is used:

Chlorophyll *a* Calibration of the Model 112:

1. Empty 1 mg of dried chlorophyll *a* into a 100 ml volumetric flask and dilute to 100 ml with 90% Acetone (10 mg/l).

2. Make serial dilutions of 1.0 mg/l, 0.1 mg/l, and 0.01 mg/l from the 10 mg/l solution (10 ml of each solution diluted to 100 ml with 90% Acetone).

3. Read the 10 mg/l and 1 mg/l solutions on a spectrophotometer with a 10 cm cell path length at 750 nm, 665 nm, 664 nm, 647 nm and 630 nm. Add 2 drops of 5% Hydrochloric Acid and read again. The reading at 750 nm is a turbidity blank. If its value is greater than .005, centrifuge the sample at 1160 rpm for 5 minutes and read it again. The reading at 665 nm is used in the determination of phaeopigments.

4. Read the 10, 1, 0.1 and 0.01 mg/l solutions on the fluorometer, using many dilutions and all slit widths.

5. The calculations for the Spec. numbers are as follows:

$$\text{mg Chl } a\ /l = 11.85(R_{664}) - 1.54(R_{647}) - 0.08(R_{630})$$

where: R_n = Reading at *n* nm

Determination of the door factors:

Multiply the 1 mg/l value by 10, and average this value and the 10 mg/l value. By using this average and the fluorescence readings from each standard, including dilutions, factors for each door, or slit width , can be calculated.

$$\text{Door Factor} = \frac{C \times 10}{R_b \times dilution}$$

C = concentration of standard. This value is multiplied by 10 to correct for the 10 cm cell path length of the spectrophotometer.

R_b = fluorescence reading before adding acid. If the reading does not go above 25, do not use in the calculation of the door factor.

Determination of τ:

Determine the ratio of R_b/R_a for all of the readings at each door. Average.
Use a rolling average of the last three calibrations as the working door factors and τ.

FRESHWATER ANALYSES

Revised 1/97

HARDNESS - EDTA TITRIMETRIC METHOD

EDTA forms a chelated soluble complex when added to a solution of certain metal cations. If a small amount of dye is added to a solution containing calcium and magnesium ions at a pH of 10 ± 0.1, the solution turns wine red. If EDTA then is added as a titrant, the calcium and magnesium are complexed. When all of the calcium and magnesium is complexed, the solution turns from wine red to blue.

Methodology

APHA. 1975. Method 309 B. EDTA Titrimetric Method *in* Standard Methods for the Examination of Water and Wastewater, 14th Edition. American Public Health Association. Washington, D.C. 1193pp.

Reagents

Buffer Solution

Hydrochloric acid (HCl), concentrated	55 ml
2 - Aminomethanol ($HOCH_2CH_2NH_2$)	310 ml
Ethylene diamine tetraacetic acid disodium salt (EDTA)	5 g
Deionized water	635 ml

In a 1000 ml volumetric flask, add 55 ml of concentrated hydrochloric acid to ~400 ml deionized water. Slowly add 310 ml of 2-aminomethanol. Add 5 g of EDTA and dilute to 1000 ml with deionized water.

Indicator

Calmagite ($C_{17}H_{14}N_2O_5S$)	0.5 g
Hydroxylamine hydrochloride ($NH_2OH{\cdot}HCl$)	4.5 g
Ethyl alcohol (CH_3CH_2OH) or Isopropyl alcohol ($CH_3CH(OH)CH_3$), 95%	100 ml

Mix 0.5 g of calmagite with 4.5 g of hydroxylamine hydrochloride. Dissolve in 100 ml of 95% ethyl or isopropyl alcohol.

Standard EDTA Titrant

Ethylene diamine tetraacetic acid disodium salt (EDTA) solution, 0.1 M	100 ml
Deionized water	900 ml

Add 100 ml of 0.1 M EDTA to exactly 900 ml of deionized water.

Hydrochloric Acid, 50%

Hydrochloric acid (HCl), concentrated	500 ml
Deionized water	500 ml

In a 1000 ml container, add 500 ml of concentrated hydrochloric acid to 500 ml of deionized water.

Standard Calcium Solution

Calcium carbonate ($CaCO_3$), anhydrous, dried at 45°C	1.000 g
Hydrochloric Acid, 50%	As needed
Deionized water, q.s.	1000 ml
Methyl red indicator	3 drops

Weigh 1.000 g of anhydrous calcium carbonate into a 500 ml Erlenmeyer flask. Slowly add 50% Hydrochloric Acid until all of the calcium carbonate dissolves. Add 200 ml of deionized water and boil for a few minutes to expel the carbon dioxide. Cool. Dilute to 1000 ml with deionized water (1 ml contains 1.00 mg $CaCO_3$).

Procedure

1. On a mixer with a stir bar, add 50 ml of sample to a 125 ml Erlenmeyer flask. Add 2 ml of buffer solution to bring pH to 10.0 - 10.1.

2. Add 3 drops of Indicator.

3. Add Standard EDTA Titrant slowly, with continuous stirring until the last reddish tinge disappears from solution. Add the last few drops at 3 - 5 second intervals. The end point is normally blue.

4. Run samples in replicate and include blanks.

Calculation of Hardness

Hardness is calculated using the following equation:

$$\text{Hardness (mg/l } CaCO_3) = \frac{A \times B \times 1000}{\text{ml sample}}$$

where: A = volume of EDTA titrated (ml), and
B = weight of $CaCO_3$ equivalent to 1 ml EDTA titrant (mg).

To calculate B, do a titration using the Standard Calcium Solution.

CARBONATE ALKALINITY

Dissolved inorganic carbon concentration is determined by the OI Model 700 TOC Analyzer. Refer to Total and Dissolved Organic and Inorganic Carbon methodology.

Calculation of Carbonate Alkalinity

Carbonate alkalinity is calculated using the following equation:

$$\text{mg } CaCO_3/l = \frac{\text{mg C/l DIC x 100}}{12}$$

NOTE: This method can be used also on saline waters of <10 ppt salinity.

LITERATURE CITED

Kérouel, R. and A. Aminot. 1987. Procédure optimisée hors-contaminations pour l'analyze des éléments nutritifs dissous dans l'eau de mer. Mar. Environ. Res. 22:19-32.

Sanborn, H. and J. Larrance. 1972. An operations manual of the AutoAnalyzer for seawater nutrient analysis. NOAA/NMFS. Seattle, Washington. 44pp.

APPENDIX A

SAMPLE CUSTODY

Upon arrival at the laboratory, samples are counted, observed for potential problems (melting, broken containers, etc.) and placed in a freezer until analysis. Sample information and date of arrival are recorded on a log sheet.

INSTRUMENT MAINTENANCE

Analytical instruments are maintained on a regular basis and records are kept of hours of operation, scheduled maintenance, pump tube changes, etc.

A critical spare parts inventory is maintained for each instrument. Instrument down-time is minimized by troubleshooting instrument problems telephonically with manufacturers and service representatives. Spare parts can be received within 24 hours via next-day air service.

TEMPERATURE LOGS

Temperature logs of freezers, refrigerators and drying ovens are kept on a monthly basis. Thermometers used in this equipment are calibrated against a certified NBS thermometer.

DATA HANDLING

Data are input in a pre-determined format onto IBM compatible floppy disks in LOTUS-123 spreadsheet format on a microcomputer. Print-outs of the data are made and verified by laboratory personnel. Any necessary corrections are noted and made. Data then are checked via a series of programs to verify the following:

- NO_3^-, NO_2^- and NH_4^+ < Total Dissolved Nitrogen,
- Dissolved Phosphorus < Total Phosphorus,
- PO_4^{-3} < Total Dissolved Phosphorus,
- DOC < TOC,
- NO_2^- < NO_2^- + NO_3^-, and
- Dissolved Kjeldahl Nitrogen < Total Kjeldahl Nitrogen.

Any data indicating errors are given specific error codes. Final printed data files are created and sent along with an electronic copy to the client.

APPENDIX B

STATEMENT ON INSTRUMENT COMPARABILITY

The Nutrient Analytical Services Laboratory develops a data quality maintenance program for each analyte whenever new instrumentation is acquired. It is the policy of the Nutrient Analytical Services Laboratory to report any data from new instrumentation only after thorough and satisfactory side-by-side comparisons with existing instrumentation are preformed.

No predetermined number of data pairs are used to make the assessment on data comparability between new and existing methodology. Even in the case of instrumentation with similar methods of detection (i.e., automated colorimetric), no specific number of data pairs is used. Comparability at low and high concentrations, salinity and other possible matrix interferences, sensitivity and precision are all factors in determining the number of pairs that must be addressed before bringing an instrument on-line and in determining instrument comparability.

The analyst who performs these comparisons should be experienced, open-minded and impartial. This person can give an evaluation of ease of instrument operation and a very important general statement of comparability. This statement on comparability must then be substantiated via statistical analysis of the data. As previously mentioned, these data must encompass the entire concentration range, matrix interferences, percent recovery, results of standard reference material analyses, etc. The data interpretation must support comparability. The analyst and laboratory QA/QC officer must concur and finally, some sort of presentation (written or verbal) must be given to the contractor explaining what procedure was followed and the results that were obtained to bring this instrument on-line.

STATEMENT OF QUALITY ASSURANCE/QUALITY CONTROL PROCEDURES

A constant consideration of Nutrient Analytical Services is assuring the quality of data generated by the procedures presented in this manual. Further, indication of data quality is accomplished by analyzing duplicates, spikes, standards-as-samples, standard reference materials and participating in cross-calibration exercises.

Laboratory Duplicates

Approximately 5% of the total number of samples analyzed consist of laboratory duplicates. For dissolved analytes, after a sample is analyzed, the same sample container is placed farther along in the automatic sampler tray and re-analyzed. The mean of the two values is reported as the concentration for that sample. If a difference of >10% is observed between replicates, then all of the replicates for that particular analytical run are carefully reviewed. If only one of the duplicate pairs is in question, then only that sample is re-analyzed. If all show a similar trend, then instrumentation/reagent problems are suspected and the analytical run is halted until such time as the problem is resolved. This procedure is practiced for all dissolved analytes that are not consumed completely in the analytical procedure. For those that are completely consumed and for particulate analytes, duplicate samples constitute actual duplicate samples collected in the field and analyzed in the same analytical run.

Values for each duplicate analyzed are recorded in a separate QA/QC data file along with the sample

number, sample collection date and analysis date. The mean concentration and standard deviation of the replicates are calculated in this data file.

In the case of particulate carbon and nitrogen, total suspended solids and chlorophyll *a*, 10% of the total number of samples are analyzed as duplicates. This generates sufficient quality assurance data to compensate for the omission of laboratory spikes for these non-aqueous samples.

Laboratory duplicates serve as an indicator of instrument stability, consistency in laboratory sample preparation and analysis, as well as an estimate of field proficiency.

Laboratory Spikes

Approximately 5% of the total number of samples analyzed consist of laboratory spikes. A spike is prepared by adding a known volume of standard to a known volume of pre-analyzed sample. We routinely add enough concentrated standard to provide a significant response on our instruments that is distinguishable from the original concentration of the sample. This concentrated standard is used to minimize any possible change in sample matrix by the addition of spike.

The spiked sample is analyzed and its expected concentration calculated as the sum of the original concentration and the spike concentration, normalized for the constituent volumes.. A comparison is made between the actual value and the expected value. These concentrations (original, expected and actual) are recorded in a separate QA/QC data file along with sample number, sample collection date, analysis date and the amount of spike added. In the case of particulate phosphorus, the volume filtered is not used in the calculation to determine percentage recovery.

If a value of >115% or <85% is observed for percentage recovery of the spike, then all of the spikes for that particular analytical run are carefully reviewed. If only one of the spikes is in question, then only that sample is re-analyzed. If all show poor recovery, then instrumentation/reagent problems are suspected and the analytical run is halted until such time that the problem is resolved. This procedure is adhered to for all dissolved analytes and for particulate phosphorus and biogenic silica.

Documentation of Slopes, etc.

A running record of the slopes of the standard curves (the so-called "F," "S" and "K" factors) is maintained for each analysis. Random up and down movement within a predetermined range as a function of time indicates the analysis is under control. Consistent upward or downward trend of these factors indicates the analysis is out of control and requires immediate attention.

Limits of Detection

Limits of detection, the lowest concentration of an analyte that the analytical procedure can reliable detect, have been established for all parameters routinely measured by Nutrient Analytical Services. The limit of detection is 3 times the standard deviation of a minimum of 7 replicates of a single low concentration sample.

Table 3 presents the current minimum limits of detection. These values are reviewed and revised periodically.

Standard as Sample

Standards are analyzed as samples throughout the analytical run. This is an excellent means of evaluating instrument performance during the course of an analytical run. Standards are analyzed every 12 - 20 samples, depending on the instrument and analyte.

Table 3. Minimum limits of detection of CBL, October/November 1987, March 1994[a]

NUTRIENT	MEAN CONC. (mg/l)	STANDARD DEVIATION	DETECTION LIMIT (mg/l)	(μM)
Ammonium	0.0190	0.001	0.0030	0.21
Nitrite	0.0024	0.00005	0.0002	0.01
Nitrite + Nitrate	0.0298	0.00005	0.0002	0.01
Phosphate	0.0165	0.00019	0.0006	0.02
Dissolved Organic Carbon	2.9600	0.080	0.2400	20.00
Total Suspended Solids	4.0000	0.500	1.5000	
Particulate Phosphorus	0.0119	0.0004	0.0012	0.04
Particulate Inorganic Phosphorus	0.0027	0.0002	0.0006	0.02
Total Dissolved Nitrogen	0.4280	0.007	0.0200	1.43
Total Dissolved Phosphorus	0.0157	0.0004	0.0010	0.03
Silicate	0.6949	0.002	0.0100	0.36
Particulate Nitrogen	0.0632	0.004	0.0105	0.75
Particulate Carbon	0.3100	0.021	0.0633	5.28
Particulate Biogenic Silica	0.1630	0.003	0.0090	0.32
Sediment C (10 mg)	2.1830%	0.044	0.1300%	
Sediment N (10 mg)	0.1950%	0.003	0.0084%	
Sediment P (34.8 mg)	0.0304%	0.003	0.0087%	
FRESHWATER DETECTION LIMITS (1991)				
Total Volatile Solids	3.95	0.67	1.98	
Hardness	41.80	2.10	6.30	
Chloride	5.84	0.08	0.23	6.57
Sulfate	4.90	0.03	0.09	2.80
Carbonate Alkalinity		1.46	4.38	
Chlorophyll *a*	4.00	0.68	2.00 (μg/l)	

[a] Results based on a minimum of seven replicates collected from one cubitainer and analyzed randomly on a typical day of analyses.

Standard Reference Materials

Particulate Carbon, Nitrogen and Phosphorus: BCSS-1 is a marine sediment reference material prepared by

the National Research Council of Canada. It is certified by the Council for carbon content, gives a non-certified range of results for phosphorus, but no information for nitrogen. We have analyzed this sediment for many years and maintain a substantial database for nitrogen and phosphorus, as well as carbon values. We analyze this sediment quarterly and compare these results to the certified value, non-certified range of values and our historical values.

Dissolved Analytes and Hardness: Standard reference materials for ammonium, nitrite + nitrate, nitrite, orthophosphate, dissolved nitrogen, dissolved phosphorus, dissolved organic carbon, sulfate and chloride and hardness are supplied by SPEX, a US EPA certified company. The samples arrive in ampules and we prepare final concentrations to approximate typical estuarine concentrations. The samples are then placed in pre-cleaned poly bottles, frozen and analyzed on a quarterly basis.

The analysis of these frozen standard reference materials as a function of time also provides data on the effect of our preservation technique (freezing) on the integrity of the concentration of samples. The US EPA recommends a holding time of 28 days for many of the parameters we routinely analyze.

Dissolved organic carbon results provide a good example. SPEX standards (2 and 5 mg C/l) were prepared in deionized water on 31 May 1993. Several of each concentration were placed in pre-cleaned Teflon bottles and frozen for subsequent analysis. Results for two types of carbon analyzers are presented below:

OI ANALYTICAL MODEL 700 TOC ANALYZER
(Concentrations in mg C/l)

	ANALYSIS DATE			
Standard	5/31/95 (Initial)	6/1/95 (Refrigerated)	7/18/95 (Frozen)	8/16/95 (Frozen)
5.00	5.40	5.29	5.46	5.29
2.00	2.23	2.29	2.29	2.22

SHIMADZU TOC-5000 TOTAL ORGANIC CARBON ANALYZER
(Concentrations in mg C/l)

	ANALYSIS DATE			
Standard	6/14/95 (Frozen)	7/5/95 (Frozen)	8/16/95 (Frozen)	11/6/95 (Frozen)
5.00	5.30	5.23	5.32	5.42
2.00	2.11	2.13	2.15	2.13

Organic compounds are included with each dissolved nitrogen and dissolved phosphorus digestion to determine the completeness of the digestion procedure. Glutamic acid and glycerophosphate are used as the N and P sources, respectively. Figures 14 and 15 illustrate the percentage recoveries of these internal standards for a specific project in which we participated in 1994 - 1995.

Cross Calibration Exercises

Nutrient Analytical Services has participated in many cross calibration exercises. Participation in such programs is an excellent means of determining accuracy of results. Examples of such cross calibration exercises include the Chesapeake Bay Quarterly Split Sample Program, US EPA Method Validation Studies and International Council for the Exploration of the Sea Intercomparison Exercise for Nutrients in Sea Water.

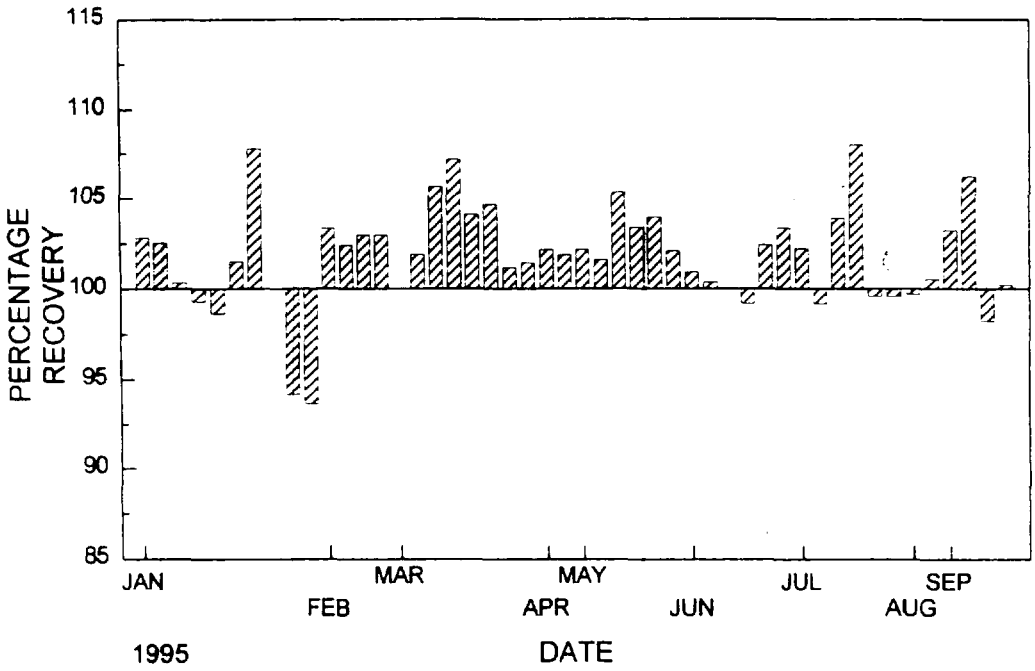

Figure 16. Percentage recovery of glutamic acid as an internal standard for total dissolved nitrogen digestion/analysis.

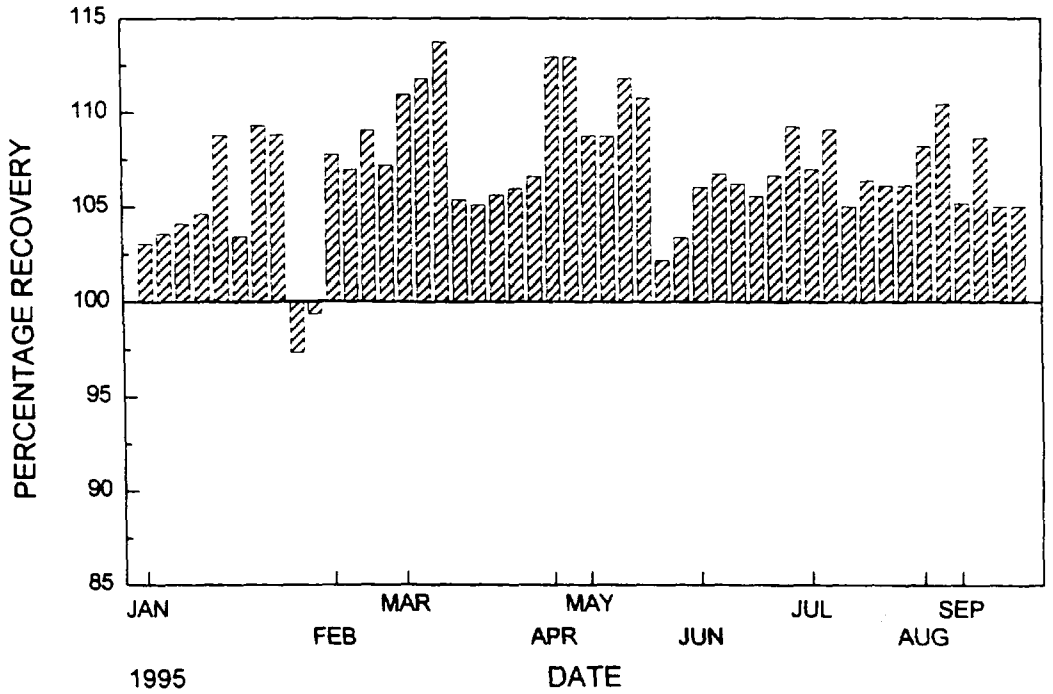

Figure 17. Percentage recovery of glycerophosphate as an internal standard for total dissolved phosphorus digestion/analysis.

ACKNOWLEDGEMENTS

We wish to thank Dr. Theodore Loder and Dr. Leonard Haas for their editorial suggestions and review of this document.

GREAT LAKES ENVIRONMENTAL CENTER (GLEC) SOPs

Great Lakes Environmental Center
Standard Operating Procedures
For

SAMPLE RECEIPT, CUSTODY, AND HANDLING

I, II. SCOPE/PURPOSE

Sample receipt, custody and handling (sample control) is a vital aspect of any environmental monitoring program which generates data that may be used for regulatory purposes or as evidence in a court of law. Additionally, the complexity of many environmental sampling programs, which may involve the collection and analysis of samples of various media from different sites, makes a sample control system essential. This standard operating procedure (SOP) defines the procedures, organizational responsibilities, and documentation requirements associated with Great Lakes Environmental Center's sample control system.

Additional sample control procedures may be required to meet the needs of specific projects. These procedures will be defined in the project plan.

III. DEFINITIONS

Custody Records: The laboratory records associated with the possession history of each sample for the time of collection, through analysis, to final disposal.

Chain-of-Custody Records: The laboratory records associated with the physical possession and/or storage history of each individual sample which may include the purchase and preparation of each sample container and sampling apparatus to the final analytical result and sample disposal.

Sample Control: The system designed to provide sufficient information to reconstruct the history of each sample, including collection, shipment, receipt and distribution within the laboratory, analysis, storage or disposal, and data reporting.

Sample custody: Samples are considered to be in a person's custody if

- The samples are in a person's actual possession
- The samples are in a person's view after being in that person's possession

- The samples were in a person's possession and then were locked or sealed up to prevent tampering
- The samples are in a secure area

IV. RESPONSIBILITIES

Sample Collector – The person collecting the samples is responsible for:

- Collecting and preserving samples in accordance with approved procedures, as specified in the project-specific plan and SOPs
- Assigning a number or code at the time of collection that uniquely identifies that sample
- Labeling each sample container with the sample number, project identification, date of collection, collector's initials, and storage requirements (room temperature, frozen, chilled)
- Documenting sample collection and preservation
- Packaging samples are maintained at the appropriate temperature
- Completing and signing the chain-of-custody records accurately and legibly
- Ensuring integrity of the samples by sealing or locking the shipping container(s) and applying custody tape (if required)
- Arranging timely transportation of samples to the laboratory, including identifying on the shipping label the name of the person to whom the samples should be delivered.

Laboratory Sample Custodian – The responsibilities of the Laboratory Sample Custodian include:

- Receiving samples
- Maintaining records of sample receipt, movement in and out of storage, and release, archival, and disposal
- Distributing completed custody forms
- Returning the shipping cooler to the client or shipper
- Communicating sample custody problems to the project manager and implementing corrective action as directed

Alternate Sample Custodian – The Alternate Sample Custodian is responsible for assisting the Laboratory Sample Custodian.

Project Manager – The Project Manager is responsible for communicating:

- Expected receipt dates and project-specific receipt requirements to the Sample Custodian
- Sample custody-related problems to the client
- Corrective action to the sample custodian and laboratory manager

Laboratory Manager -- The Laboratory Manager is responsible for designating the Laboratory Sample Custodian and the Alternate Sample Custodian and for ensuring that these individuals are trained to perform the tasks specified in this SOP.

V. PROCEDURES

5.1 SAMPLE RECEIPT

5.1.1 HOURS

Samples that are admitted to the laboratory during normal business hours are either delivered to the front desk or to a designated area in the laboratory. The Sample Custodian is notified immediately.

It is GLEC policy that samples are not received outside of regular business hours unless the project or laboratory manager has made specific arrangements with the sample custodian in advance. Samples receive in the laboratory outside of normal business hours are placed in a secure area under the appropriate storage conditions until they can be released to the Laboratory Sample Custodian.

- If samples are shipped by commercial carrier, the person receiving the samples should document the date and time of receipt on the container, and place the samples in a secure location

- If samples are transported form the field to the laboratory by GLEC sampling personnel, the samples should be place in a pre-arranged, secure location until the can be relinquished to the Laboratory Custodian.

In either case, on the next business day, the Laboratory Sample Custodian logs in the samples. (Note that the receipt form allows for separate entries of receipt and log-in date)

5.1.2 Sample Handling

The sample custodian must determine whether the sample condition upon receipt is acceptable. That is, the sample temperatures and containers are appropriate for the intended analysis; and that the samples have been received within the required holding

times. If sample containers, preservation, or timely delivery do not meet the criteria then the sample custodian must notify the project manager who in turn must notify the client.

The sample custodian must review and document the following for proper receipt of the samples:

1. Method of delivery (i.e. commercial carrier, hand delivered) and presence/absence of chains-of-custodies.

2. Inspect the shipping container(s) for the presence/absence and condition of custody seals.

3. Inspect each sample for the presence/absence and condition of samples and custody seals.

4. Inspect each sample for breaks or leaks.

5. Review the accompanying records for completeness and accuracy of sample labels and sample transmittal forms.

6. Measure and record the temperature of each container to document whether or not the samples were maintained at the appropriate temperature (frozen, cool, or room temperature) during shipment. The temperature of a cooler blank (if available), melt water, or the external temperature of the sample containers should be measured and documented. (Thermometers or probes are never inserted into a sample container).

7. Upon completion of the sample inspection, the Laboratory Sample Custodian formally acknowledges receipt of the samples by signing, dating, and noting the current time on the sample transmittal form(s).

8. Log-in and assign unique laboratory identification numbers to each sample.

9. Storage of samples in the appropriate storage location until samples are ready to be further processed.

10. Communicate sample custody forms as follows: The original stays with the sample analysis data sheets, copies are made to distribute with reports.

11. Return the shipping coolers to the client or shipper, if necessary.

5.1.3 Sample Acceptance/Rejection Criteria

It is the responsibility of the project manager to specify in the QAPP that project samples are being analyzed for compliance monitoring. In these cases samples could be rejected if:

- The integrity of the sample is comprised (leaks, cracks grossly contaminated container exteriors or shipping coolers interiors, obvious odor, etc.)
- The identity of the container cannot be verified
- The proper preservation of the container cannot be established
- Incomplete sample custody forms: the sample collector is not documented or the custody forms are signed and dated by the person who relinquished the samples
- The sample collector did not relinquish the samples

If the sample custodian identifies any of the above conditions the project manager must be notified.

5.1.4 Documentation

Documentation of sample receipt includes the original sample custody forms (or copies of the originals are returned to the shipper), any additional records of transmittal, the shippers airbill (if applicable), and the sample check-in form. Sample custody records are filled by date in the Custody Logbook, which is kept in the access controlled sample custody area. A record of GLEC laboratory ID numbers, including cross-reference to original field Ids, are kept as hard copies and stored in the custody area.

The condition of the samples, integrity of the custody seals, discrepancies between sample labels and transmittal forms, and unusual events or deviations from the project work plan or SOP are documented and any problems are recorded on the original custody forms, if present.

5.2 DISTRIBUTION

The sample custodian will provide the project manager and Lab manager with a copy of all documentation that accompanied the samples.

The custodian should make the following distribution of custody forms:

- Copies of the same receipt and custody forms are provided to the project manager,

5.3 SAMPLE LOG-IN

The receipt of samples received by the laboratory will be recorded in the Laboratory Sample Receipt Logbook. Each incoming sample is assigned a unique ID (GLC) number, which is clearly and indelibly marked on each sample container and the custody form. Samples that contain more than one jar for the same analysis will be labeled with the same Lab ID and the jar number (e.g., 1 of 2 and 2 of 2). Alternatively, a separate ID number can be assigned to each container. The full ID including the jar number will be called out in the preparatory records. Upon completion of log-in procedures, samples are placed in a limited-access area and at the appropriate temperature.

5.4 SAMPLE STORAGE

Upon completion of sample log-in procedures, samples are transferred to a secure location for storage. This location may be room, refrigerator, or freezer, depending on the storage requirements of the samples.

5.5 SAMPLE TRACKING

Each technician is responsible for the care and appropriate storage of the samples in his/her custody, and for documenting the conditions under which the samples are maintained. Labs/areas which house samples in-progress must be controlled-access (locked) during non-working hours.

5.6 CLIENT NOTIFICATION

The client must be notified immediately if problems are noted during sample receipt and log-in so that corrective action may be initiated. The sample custodian may communicate directly with the client custodian ort representative if discrepancies between sample labels and custody forms are noted or if samples are missing. The project manager should communicate other problems (e.g., holding time exceedences, preservation issues, incomplete or improper custody records). It must be specifically documented if the client approves analysis of the samples. All corrective action is communicated to the sample custodian or laboratory manager in writing.

Specific samples may include other client notification requirements (e.g., if permit thresh hold limits are exceeded the client must be notified within 24 hours of verified sample data). The project manager should define requirements such as theses in the Study Plan or in the QAPP.

5.7 SAMPLE ARCHIVAL AND DISPOSAL

Samples are returned to the custody of the sample custodian. Once sample analysis is considered final, the samples can be archived.

The decision to archive samples should be made by the client and the project manager when the project is initiated. Sample disposition and the length of storage should be defined in the project plan. In the absence of other directives, unexpended samples are archived for one month after the delivery date of the final data. Unless otherwise specified by the client, the samples will be discarded in the proper waste stream after this period. The project manager will be notified prior to disposal of samples.

5.8 SAFETY

Sample handling must always assume that samples are potentially "contaminated". Therefore personnel protective equipment is worn when unpacking samples (safety glasses, lab coat, and gloves).

Occasionally, samples are received broken. Because the potential hazard may be unknown all spills must be treated as if the material is hazardous. Clean-up materials should be maintained in the same custody room

The hazardous waste coordinator and/or Project Manager should be contacted to determine the proper disposal procedures for spilled samples. In general, water samples are absorbed into chemical absorbent; sediment soil, or tissues are placed in heavy-duty plastic bags. These are both disposed of in the laboratory's waste stream. Broken glass containers are placed in the glass disposal container.

5.9 TRAINING

A person who is being trained as a sample custodian must first read this SOP. The person may then perform specific tasks under the supervision of a qualified instructor (laboratory Sample Custodian or Alternate). Tasks performed by the trainee are reviewed and co-signed by the Laboratory sample Custodian or Alternate until it has been established that the trainee is able to perform these tasks without supervision.

Originated By: _____

Approved By: _____
Mgr. of Operations

Standard Operating Procedure
for
Storage and Handling of Test Materials

I/II. Scope/Purpose

1.1 This Standard Operating Procedure (SOP) describes the procedures for storage and handling of test materials.

III. References

None.

IV. Definitions

None.

V. Procedure

5.1 When test materials have been properly logged-in following receipt (SOP GLEC I-004), they will be transported to a designated storage area.

5.2 Each container will be labeled with an Great Lakes Environmental Center (GLC) number taken from the test material (effluent) log book.

VI. Quality Control

6.1 Records will be kept as indicated in this SOP. These are reviewed by the study director and/or supervisory personnel.

6.2 Personnel must have prior written training documentation and check-off by designated training/supervisory personnel.

Originated by: Pamela F. Smith Date 4/18/01
Pamela F. Smith

Approved by: Donald L. McCauley for Date 4/18/01
Laboratory Manager D McCauley

Standard Operating Procedure for Receipt of Test Materials

I/II. Scope/Purpose

1.1 This Standard Operating Procedure (SOP) describes the procedure for receipt of test materials.

III. References

None.

IV. Definitions

None

V. Procedure

5.1 The principal investigator or a designated technician for each study will be responsible for the receipt and handling of all test material used in that study.

5.2 When test materials arrive at the Laboratory they will be immediately taken to the sample storage room or testing room, and the pertinent information recorded in the Test Materials (Effluent) Log Book.

5.3 The following information will be recorded in the log book for each test material as it is received:

5.3.1 Great Lakes Environmental Center (GLC) Number

5.3.2 Date test material is received

5.3.3 Project number

5.3.4 Volume or weight of test material

5.3.5 General characteristics of test material

5.3.6 Type of container

5.3.7 Storage location

5.3.8 Date of disposal

5.4 Each container of test material will be labeled with a GLC number and stored according to the SOP on Storage and Handling of Test Material.

5.5 All entries in the test material (effluent) log book will be made in ink (preferably black ink). Each line and column in the test material log book must be completed using the letters NA in spaces that are not applicable.

VI. Quality Control

6.1 All data will be recorded on data forms and in a record book.

Originated by: Pamela F. Smith Date 01-02-01
Pamela F. Smith

Approved by: Dana J McCauley Date 2/19/01
Laboratory Manager

Standard Operating Procedure
for
Manual Cleaning of Glassware and
Equipment Used in Toxicity Tests

I/II. Scope/Purpose

1.1 This Standard Operating Procedure (SOP) describes the procedure for the manual cleaning of glassware and equipment used in toxicity tests.

III. References

None

IV. Definitions

None.

V. Procedures

5.1 Remove any marker or tape labels from glassware. A paper towel wet with acetone can be used to remove marker from glass dishes.

5.2 Wash all glassware and equipment used during testing (aquaria, beakers, graduated cylinders, etc.) with a phosphate-free detergent and appropriate brushes. A Pub-Scrub® with rotating brushes can be used to clean large numbers of beakers efficiently.

5.3 Rinse thoroughly with hot tap water until sudsing has ceased.

5.4 Rinse with a 10% solution of HCL ensuring that all interior surfaces are covered.

5.5 Rinse thoroughly (3 to 5 times) with reverse osmosis water.

5.6 Rinse glassware with 100% acetone and air-dry glassware and equipment on a counter top which is covered by absorbent paper.

5.7 Rinse thoroughly with reverse osmosis water.

5.8 Store equipment and glassware in its proper location.

5.9 Rinse any glassware with Millipore water before using in toxicity tests.

5.11 Special Instructions for culture equipment

Omit step 5.6

VI. Quality Control

6.1 10% HCL should be renewed bi-weekly (at minimum). 100% acetone solutions should be renewed daily as needed.

6.2 Personnel must have prior written training documentation and check-off by designated training/supervisory personnel.

VII. Safety

7.1 Technician will wear appropriate protective clothing, at a minimum a lab coat, glasses and gloves, when disposing of test materials and cleaning glassware or equipment.

Originated by: Pamela F. Smith Date 4/18/01
Pamela F. Smith

Approved by: Donald L McCauley (for D McCauley) Date 4/18/01
Laboratory Manager

Standard Operating Procedure for Determination of Alkalinity of a Water Sample

I/II. Scope/Purpose

1.1 This Standard Operating Procedure (SOP) describes the method for the titrimetric determination of alkalinity of a water sample using a titration to an electrometrically determined end point of pH 4.5.

III. References

None.

IV. Definitions

4.1 Alkalinity is reported as mg/L $CaCo_3$.

V. Procedure

5.1 Method

5.1.1 Place 50 ml of a water sample into a 100 ml beaker.

5.1.2 Place the pH electrode so that the tip of the probe is submersed in the water sample.

5.1.3 Measure the pH of the sample.

5.1.4 Lower the buret so that the tip remains above the water sample.

5.1.5 Record the volume of standard sulfuric acid titrant (0.02 N H_2SO_4) in the buret to 0.1 ml.

5.1.6 Add standard sulfuric acid, 0.02 N, stirring gently but thoroughly with a magnetic stirrer, and allow the pH meter reading to reach equilibrium.

5.1.7 Titrate until the pH is 4.5.

5.1.8 Record the volume of titrant in the buret to 0.1ml. Subtract the initial reading from the final reading to obtain the total volume of titrant used. Calculate the alkalinity and record this on the data sheets.

5.2 Calculation of alkalinity as mg/L $CaCO_3$:

Alkalinity (mg/L as CaCO3) = [(A)(N)(50,000)] ÷ (ml of sample)

where:

A = ml of standard acid used in titration
N = Normality of the standard acid (0.02)

VI. Quality Control

6.1 All data will be recorded on data forms or in record books.

6.2 pH meter should be calibrated daily according to SOP.

6.3 Burets should be cleaned periodically

6.4 Personnel must have prior written training documentation by designated training/supervisory personnel.

Originated by: Pamela F. Smith Date 3/13/01
Pamela F. Smith

Approved by: D. McCauley Date 3/13/01
Laboratory Manager

Standard Operating Procedure for Use of Dissolved Oxygen Meters

I/II. Scope/Purpose

1.1 This Standard Operating Procedure (SOP) describes the probe method for measuring dissolved oxygen (DO) using 3 different meters.

1.1.1 YSI Model 50 Oxygen Meter
1.1.2 YSI Model 54 Oxygen Meter
1.1.3 YSI Model 57 Oxygen Meter

1.2 All instruments are designed to read directly in parts per million (ppm = mg/L) and compensate for temperature effects on both probe membrane permeability and oxygen solubility in water.

III. References

3.1 Refer to instrument operation manuals for YSI Oxygen Meter, Model 50, 54, or 57 (Yellow Springs Instrument Co. Inc., Yellow Springs, Ohio, 45387, (513) 767-7241).

IV. Definitions

None.

V. Procedures

5.1 Initial Set-up

5.1.1 YSI Models 54 and 57 Oxygen Meters

A. Prepare the probe according to the manufacturer's probe instructions.

B. Connect the probe to the meter, then place the probe in a constant oxygen environment such as: a BOD bottle, the bottomless calibration bottle supplied or a flask containing water.

C. Set function switch to **RED LINE** and adjust meter to the red line on dial using the red line knob.

D. For model 54 - with the instrument turned off, check the mechanical zero of the meter (pointer should indicate zero). Adjust with the screw on the meter case. Recheck when the position of the instrument is changed. For model 57 - set function switch to **ZERO** and adjust meter to zero on the dial using the zero knob.

NOTE: It is not necessary to turn the instrument off after each measurement. In normal use, the meter may be left on in any switch position between measurements, and turned off at the end of a series of measurements. Each startup from **OFF** may require a 5 to 15 minute wait for probe stabilization.

5.1.2 YSI Model 50 Oxygen Meter

A. Prepare the probe according to the manufacturer's probe instructions.

B. Connect the probe to the meter, then place the probe in a constant oxygen environment such as a BOD bottle or the bottomless calibration bottle supplied.

C. Set the function switch to the **TEMP °C** position. An audible tone will sound. This is a signal that the microprocessor's Power On Self Testing (POST) diagnostic mode has been activated. Check to see that all meter segments are displayed. A second tone will sound in about 7 seconds to signal the end of the POST diagnosis, and the display will blink briefly.

D. If the POST diagnosis discovers a fault in instrument operation, the display will not appear, or will "freeze". Should this occur, it is necessary to return the instrument for repair to the dealer or to YSI. See Warranty and Repair section of the Operations Manual.

E. Temperature will be displayed after the second tone. Observe the reading for stability. Temperature equilibration may take up to 5 minutes.

F. Set the function switch to either the % or the mg/L position and allow 15 minutes for the system to stabilize. If calibration is attempted prematurely, calibration values will drift and may be out of specification.

NOTE: It is not necessary or desirable to turn the instrument off after each measurement. In normal laboratory use, the meter may be left on in any switch position between measurements, and turned off only at the end of the day. Each start-up from OFF could require a 5 to 15 minute wait for probe stabilization.

5.2 Calibration of DO meters

5.2.1 Air Method

A. Follow the Initial Set-up procedures described earlier.

B. Set the function switch to **TEMP °C**.

C. Place a moist sponge or a wet piece of cloth in the plastic calibration bottle provided with the probe. Loosen the bottle lid about one-half turn and slip the open end of the bottle over the probe guard up to the body. Place the probe in a protected location where temperature is not changing, or wrap in a cloth or other insulator, and allow 3 to 5 minutes for temperature equilibration.

D. From the Solubility of Oxygen Table on the back of the instrument, record the mg/L value, in the zero salinity column, corresponding to the temperature indicated on the dial (models 54 and 57) or digital display (model 50).

E. Determine the local altitude or the true atmospheric pressure. (Note that "true" atmospheric pressure is as read on a mercury barometer. Weather Bureau reporting of atmospheric pressure is corrected to sea level.) Using the Atmospheric Pressures and Altitudes Table on the back of the instrument, determine the calibration correction for the pressure or altitude.

F. Multiply the value in mg/L recorded in step D by the correction determined in step E. The result, divided by 100, is the correct calibration value.

G. For model 50, turn the function switch to **mg/L CAL**. Using the key pads beneath the digit positions in the display, set the calibration value determined in step F. Each separate pressure on a key pad lowers the displayed digit by one count. Continuous pressure will cause the displayed value to cycle. Turn the function switch to **mg/L**. **CAL** will appear on the display, followed in a few seconds by one or two tones. Next the calibration value that was set will appear. Observe the reading for stability for two or three minutes. Drift in the reading of more than two digits may mean that insufficient warm-up time was allowed.

For models 54 and 57 - turn the function switch to the appropriate **Calibrate** setting (either 10 or 20 mg/L) and using the calibrate knob, set to the value determined in step F (corrected calibration value).

H. Record calibration daily, when used, in the instrument log book.

5.2.2 Water Method

A. Fill a beaker with water and aerate vigorously at room temperature for at least 15 minutes.

B. Place the probe in the aerated water and stir gently.

C. Follow steps D - I in the air method of calibration to complete the water method of calibration.

5.3 Measurement of DO

5.3.1 Set function switch to appropriate mg/L position.

5.3.2 Place probe in solution to be measured and agitate solution (or probe).

5.3.3 Allow to come to equilibrium and record the value from the dial (models 54 and 57) or the digital display (model 50).

VI. Quality Control

6.1 Records will be kept as indicated in this SOP. These are reviewed by the study director and/or supervisory personnel.

6.2 Personnel should have prior written training documentation by designated training/supervisory personnel.

VII. Sample Calculations

7.1 Example Using Altitude: At a temperature of 21°C, the oxygen value at sea level of 760 mm Hg atmospheric pressure is 8.92 mg/L for saturated air). At an altitude of 1400 feet, the calibration correction is 95%. The correct calibration value is (8.92 mg/L x 95)/100 = 8.47 mg/L.

7.2 Example Using Atmospheric Pressure: At a temperature of 18°C, the oxygen value at sea level is 9.47 mg/L. At a pressure of 745 mm Hg, the calibration correction is 98%. The correct calibration value is (9.47 mg/L x 98)/100 = 9.28 mg/L.

Originated by: Pam Smith Date 3/13/01

Approved by: D M Cauley Date 3/13/01
Laboratory Manager

Standard Operating Procedure
for
For Use of Conductivity Meters

I./II. Scope/Purpose

1.1 This Standard Operating Procedure (SOP) describes the methods for determining the conductivity of unknown solutions using 3 different meters.

1.1.1 YSI Model 33 Conductivity Meter

1.1.2 YSI Model 35 Conductance Meter

1.1.3 Barnstead PM-70CB Conductivity Bridge

III. References

3.1 Refer to appropriate instrument manuals for; YSI Conductance Meter, Model 33 and 35, Jan. 1988, (Yellow Springs Instrument Co., Yellow Springs, Ohio 45387; (513) 767-7241), or
Instrument Manual for Banstead Conductivity Bridge, Model PM-70CB (Barnstead/Thermolyne, 2555 Kerper Blvd., Dubuque IA 52001; (319) 556-2241).

IV. Definitions

4.1 Each meter encompasses different conductance ranges.

4.1.1 YSI Model 33 - This meter has a readability of as low as 2.5 umhos/cm, and a range between 0 to 50,000 umhos/cm.

4.1.2 YSI Model 35 - This meter is capable of conductance measurements from 0.01 umhos/cm^{-1} to 1999 millimhos/cm^{-1}.

4.1.3 Barnstead PM-70CB - This bridge is capable of conductance measurements from 0.1 umho to 0.12 mho.

V. Procedures

5.1 YSI Model 33 Conductivity Meter

5.1.1 Calibration Check

A. The conductivity meter is calibrated by the manufacturer to an accuracy of ± 1.5%.

B. A calibration check may be performed periodically, using a YSI 3161 conductivity calibrator following the manufacturers instructions or a 0.01 demal KCl solution (0.74 g of pure dry KCl diluted with distilled water until the solution is 1 kg).

C. The conductivity measured by the meter at the temperature of the solution is checked against the values in Table A. Note however that since distilled water is slightly conductive, the measured conductivity will be higher by an amount equal to the water's conductivity.

Table A. Calibration check with 0.01 demal KCl solution.

Temperature °C	Conductivity µmhos/cm
15	1141.5
16	1167.5
17	1193.6
18	1219.9
19	1246.4
20	1273.0
21	1299.7
22	1326.6
23	1353.6
24	1380.8
25	1408.1
26	1436.5
27	1463.2
28	1490.9
29	1518.7
30	1546.7

5.1.2 Conductivity Measurement

A. Adjust meter zero (if necessary) by turning the bakelite screw on the meter face so that the meter needle coincides with the zero on the conductivity scale.

B. Turn the **MODE** control to **REDLINE** and adjust the **REDLINE** control so the meter needle lines up with the redline on the meter face. If this cannot be accomplished, replace the batteries.

C. Plug the probe into the probe jack on the side of the instrument.

D. Put the probe in the solution to be measured so that there are no obstructions near the probe. At least two inches of clearance from non-metallic underwater objects, and six inches from metallic objects must be maintained. Gentle agitation by raising and lowering the probe several times during a measurement insures flow of specimen solution through the probe.

E. Switch the **MODE** control to the x100 scale. If the reading is below 50 on the 0-500 range, switch to the x10 scale. If the reading is still below 50, switch to the x1 scale. Read the meter scale and multiply the reading appropriately to get the conductivity in umhos/cm.

F. When measuring on the x100 and x10 scales, depress the **CELL TEST** button. The meter reading should fall less than 2%; if greater, the probe is fouled. Clean the probe and re-measure. The **CELL TEST** does not function on the x1 scale.

G. Rotate switch to **OFF** position. Rinse the probe with deionized (or distilled) water before reinserting it in the next solution.

5.1.3 Maintenance

A. When the cell test indicates low readings, the probable cause is dirty electrodes. For normal cleaning, soak the probe for five minutes with a locally available bathroom tile cleaning preparation. For stronger cleaning, a five minute soak in a solution made of 10 parts distilled water, 10 parts isopropyl alcohol and one part HCl can be used. Rinse the probe with distilled water after cleaning and before storage.

B. Probes are best stored in deionized (or distilled) water. If the probe has been stored dry, soak with deionized (or distilled) water before use.

5.2 YSI Model 35 Conductance Meter

5.2.1 Calibration

A. Plug conductance meter into appropriate power source.

B. Set conductance meter to desired range.

C. Choose one of the seven conductance calibrators and insert the leads of the calibrator into the binding posts of the meter marked **CELL**.

D. After the meter reading becomes steady, note the reading. The conductance meter reading should agree with the nominal value of the calibrator.

E. If there is a disagreement, a correction factor (F) must be calculated. The correction factor is calculated by the equation:

$$F = \frac{\text{Nominal Value of Calibrator}}{\text{Instrument Reading for Calibrator}}$$

5.2.2 Conductance Measurement

A. Connect the instrument to an appropriate power source.

B. Connect the conductivity cell leads to the terminals marked **CELL**.

C. Immerse the conductivity cell into the solution to be measured. The electrodes must be submerged and the electrode chamber must be free of trapped air. Dip the cell in the solution repeatedly to assure proper wetting.

D. The cell should be at least ¼-inch away from the walls or bottom of the solution container.

E. Rotate the range switch to the lowest range position which results in a reading (within range) on the display.

F. The conductance value of the solution is displayed on the meter. Conductance is expressed as umhos/cm or millimhos/cm.

G. Rinse electrode with deionized water.

H. Rotate switch counter-clockwise to the **OFF** position.

5.3 Barnstead PM-70CB Conductivity Bridge

5.3.1 Bridge Range Calibration

A. Rotate the **MULTIPLIER** knob to the **KILOHMS X1 (CAL)** position.

B. Set the Digital switch to 10.00.

C. Place the **CHECK-OPER.** switch to the **CHECK** position.

D. Place the **OFF-ON** switch to the **ON** position.

E. Rotate the **SENSITIVITY** knob to near the center position.

F. Rotate the **OHMS** screw as required until the meter needle is aligned with the 0 mark on the meter.

G. Rotate the **MULTIPLIER** knob to the **MICROMHOS X10 (CAL)** position.

H. Rotate the **MHOS** screw as required until the meter needle is aligned with the 0 mark on the meter.

I. Document in calibration recordbook noting the date.

5.3.2 Conductance Measurement

A. Connect the conductivity cell terminals to the binding posts.

B. Submerge the cell above its vent slots in the liquid.

C. Tilt the cell and lightly tap it to expel through the vent slots any air trapped in the cell. (Keep suspended in sample, do not touch glass surfaces.)

D. Allow sample to come to room temperature, if possible.

E. Place the **OFF-ON** switch to the **ON** position.

F. Place the **CHECK-OPER.** switch to the **OPER.** position.

G. Rotate the **SENSITIVITY** knob fully clockwise.

H. Set the digital switch to 11.99.

I. Set the **MULTIPLIER** knob at the **NANOMHOS X 100** position.

J. Starting with the lift digit, decrease the setting on the digital switch until the meter is at null.

K. The measured conductivity is the setting on the digital switch times the setting on the **MULTIPLIER** scale x the cell constant.

L. Determine temperature of sample within 0.5 °C. If the temperature of the samples is not 25 °C, make temperature correction as follows:

1. If the temperature is below 25 °C, add 2% of the reading per degree.

2. If the temperature is above 25 °C, subtract 2% of the reading per degree.

M. Report results as Specific Conductance, umhos/cm at 25°C.

5.3.3 Bridge Zero Adjustment

A. Rotate the **MULTIPLIER** knob to the **KILOHMS X1 (CAL)** position.

B. Short circuit the binding posts.

C. Set the Digital switch to 0.00.

D. Place the **CHECK-OPER.** switch to the **OPER.** position.

E. Place the **OFF-ON** switch to the **ON** position.

F. Rotate the **SENSITIVITY** knob fully clockwise.

G. Rotate the **ZERO ADJUST** screw as required until the meter needle is aligned with the 0 mark on the meter.

H. Remove the short circuit from the binding posts.

5.3.4 Cell Calibration

A. Check the accuracy of the cell constant and conductivity bridge monthly using standard potassium chloride solution as given in the following table:

Conductivity (Degrees °C)	0.01 M KCl Micromhos/cm
21	1305
22	1332
23	1359
24	1386
25	1413
26	1441
27	1468
28	1496

VI. Quality Control

6.1 Document in calibration record book the date of cell calibration and the temperature at which calibration was performed.

6.2 Note routine maintenance in instrument log book.

6.3 Personnel must have written training documentation by designated training/supervisory personnel.

Originated by: Pamela F. Smith Date 4/10/01

Approved by: Dennis T McCauley Date 4/9/01
Laboratory Manager

Standard Operating Procedure
for
Use of Orion Research
Ammonia Electrode Model 95-12

I/II. Scope/Purpose

1.1 This Standard Operating Procedure (SOP) describes the procedure for use of the Model 95-12 Ammonia Electrode which allows fast, simple, economical, and accurate measurements of dissolved ammonia in aqueous solutions using the Orion Model 701A pH/ISE meter.

III. References

3.1 Refer to the Instruction Manual for Orion 701A pH/ISE Meter (Orion Research Inc., 380 Putnam Avenue, Cambridge, MA 02139; (617) 864-5400.

3.2 Refer to the Instruction Manual for the Orion Ammonia Electrode Model 95-12 (Orion Research Inc., 380 Putnam Avenue, Cambridge, MA 02139; (617) 864-5400).

3.3 Orion Research Analytical Methods Guide, Eighth Edition, May 1977 (Orion Research Inc., 380 Putnam Avenue, Cambridge, MA 02139; (617) 864-5400.

IV. Definitions

None.

V. Procedure

5.1. Check electrode slope as follows:

5.1.1. Prepare two or more standards in the expected sample range. For example:

Using ammonia as nitrogen standard (ammonia chloride 1000 ± 5 ppm as N)

Conc (mg/L)	Vol. Std. (ml)	Vol. Deionized Water (ml)
1.00	0.1	99.9
5.00	0.5	99.5
10.0	1.0	99.0
50.0	5.0	95.0
100.0	10.0	90.0

5.1.2. Add 2 ml of 5M NaOH Ionic Strength Adjustor (ISA) to each 100 ml of standard.

5.1.3. Press **mode** key until CONC mode indicator is displayed.

5.1.4. Place electrode in least concentrated standard and stir with magnetic stirrer. Calibrate meter from low to high as indicate din the 710A Meter Instruction Manual (page 16).

5.1.5. Record slope in the record book for the 710A meter. The slope should be between -54 and -60 to be valid.

5.2. Direct measurement of Aqueous Ammonia

5.2.1. Warm 100 ml of sample to be analyzed to room temperature.

5.2.2. Add 2 ml of 5M NaOH Ionic Strength Adjustor (ISA) to each 100 ml of sample.

5.2.3. Rinse electrode and place in sample to be analyzed. While sample is being stirred with a magnetic stirrer, measure ammonia concentration directly when meter stabilizes. Record concentration in study files.

VI. Quality Control

6.1 Run a blank sample to ensure that no interference is being introduced.

6.2 When possible analyze duplicate samples.

6.3 Records will be kept as indicated in this SOP. These are reviewed by the study director and/or supervisory personnel.

6.4 Personnel must have prior written training documentation and check-off by designated training/supervisory personnel.

Originated by: Pamela F. Smith Date 4/10/01

Approved by: Dennis McCauley Date 4/9/01
Laboratory Manager

Standard Operating Procedure
for the
Use of the Orion 710A pH Meter and Orion pH Electrode

I/II. Scope/Purpose

1.1 This Standard Operating Procedure (SOP) describes the procedure to be followed for the operation, calibration, repair and maintenance of the Orion 710A pH meter with an Orion Ross® pH electrode.

III. References

3.1 Orion Ross® Combination pH Electrode Instruction Manual, 1997, Orion Research Incorporated.

3.2 Orion Benchtop pH/ISE Meters Models 410A, 420A, 520A, 525A, 710A, 720A 920A Instruction Manual, 1999, Orion Research Incorporated.

3.3 ASTM Standard Methods, Method D 1293, Test Method B, 1992, American Society for Testing and Materials.

IV. Definitions

4.1. A maintenance log is a book or other like bound volume in which are kept records of routine maintenance, replacement of expendables, or repairs performed on the instrument. In addition, it shall contain the following information:

4.1.1. Name and make of the instrument;

4.1.2. Serial Number;

4.1.3. The name and model number of the pH meter and the electrode(s) used with it;

4.1.4. Current location and date of operation;

4.1.5. Person currently responsible for the instrument with their location and phone number;

4.1.6. The printed names, signatures, and initials of all persons making entries into the log; and

V. Procedures

5.1 Calibration

5.1.1. Select two or three buffers whose pH bracket the expected pH of the sample, with one buffer having a pH of 7.00. Fresh buffer must be used at the start of each day, and replaced during the day if contamination is suspected. Buffer of pH 4.00 and/or pH 10.00 is used to appropriately bracket the pH range anticipated.

5.1.2. All samples and buffers should be at the same temperature, as small variations in temperature can cause errors in measurement. The slope of the pH electrode, the potential of the reference electrode, and the pH of the buffer are temperature-dependent. If many samples are to be run or if the temperature of the room changes, the unit should be recalibrated with pH 7.00 buffer hourly.

5.1.3. Connect the electrode to the 710A pH meter and turn the meter on by pressing the POWER key. Allow the meter to warm up for at least 15 minutes.

5.1.4 Select the pH calibration mode by pressing **2nd** then the **cal** key. The date and last time of calibration will be displayed. P1 is also displayed indicating the meter is ready for the first buffer.

5.1.5 Place rinsed electrode into clean buffer (beginning with the buffer with the lowest calibration value). Wait for the beep and "ready" to be displayed beside the reading to make sure the pH reading has stabilized (the reading will flash). If the reading is accurate press the **yes** key. If not press the scroll up or scroll down key. Then just one of the numbers will flash at a time. Adjust the reading to the correct value for the first digit and press **yes**, then the next digit should blink and correct the digit using the scroll keys and continue until all the digits have been corrected.

Note: If any of the readings for the pH buffers have to be adjusted more than .05 units, the meter check-out procedure described in the manual should be performed and then the calibration procedure.

5.1.6 The next display should be P2 indicating the meter is ready for the next buffer. Rinse the electrode with deionized water and place it in the buffer and repeat the process above.

5.1.7 Press measure to end the calibration. The electrode slope is calculated and displayed for five seconds. Record this number in the meter calibration log. The meter will automatically proceed to the "measure" mode.

5.1.8 Record in a bound log book the date of calibration, buffers used, and the initials of the calibrating technician.

5.2 pH Measurement of Samples

5.2.1. The instrument can be calibrated using at least two pHs and up to as many as five. Three pHs, usually pH 7.00 and pH 4.00 and 10.00, are used to bracket the expected sample pH for toxicity testing.

5.2.2. All solutions must be stirred, either with the electrode itself or with a stir bar.

5.2.3. The electrode must be thoroughly rinsed with water before immersing in a new solution. Shake off excess drops to prevent carryover or dilution.

5.2.4 Place the electrode in the sample, and wait for the meter reading to stabilize. Record the sample pH.

5.3. Maintenance

5.3.1. Routine Maintenance:

a. The electrode is refilled weekly with a KCl "Ross® Internal Filling solution (Orion Cat. No. 810007). DO NOT USE ANY FILLING SOLUTION WHICH CONTAINS SILVER FOR THE 8102 ROSS® COMBINATION ELECTRODE.

b. If the electrode shows slow or erratic responses, it should be cleaned. Soak the electrode in 1 N HCl for 15 minutes to one hour, followed by soaking in 1 N NaOH and then in pH 7.00 buffer solution with 1gm of KCL in 200 mls of pH 7.00 buffer solution for at least 30 minutes.

c. Electrode Storage:

1. short term - store the electrode in a pH 7 buffer. The electrode may also be stored in the open air for up to one hour. Do not store in water, as this will shorten the electrode life.

2. long term - Store the electrode with the protective cap (used for shipping) on after adding a few drops of electrode storage solution.

5.3.2. If electrical malfunctions occur to the meter, refer to Orion's handbook for suggested remedies. The self-test and meter check-out procedures will remedy most meter malfunctions.

5.3.3 The pH electrode can be checked out by taking readings of buffers using the millivolt measurement mode:

Millivolt Reading of pH 4.00 buffer	Range should be 140-210
Millivolt Reading of pH 7.00 buffer	Range should be 0 ± 30

The probe is functioning properly if the difference between the two buffers is between 160 and 180.

5.3.4 Electrical repairs should be performed by a qualified electronics technician or return it to the manufacturer for repair.

5.3.3. A description of all routine and non-routine maintenance or repairs shall be recorded in the maintenance log book along with the date and signature/initials or the person responsible.

5.4. Safety

5.4.1 If a parallel ground adapter is necessary for plugging in the three-pronged cord, be sure that ground is established. Do not use this adapter to obtain isolation.

5.4.2. Lab coat and glasses are required for all sample handling. Gloves are required for safe handling of radioactive other hazardous substances.

5.4.3. Spills should be wiped up immediately and the instrument and electrode are decontaminated as needed. Clamping of sample vials will reduce spillage hazards.

VI. Materials

6.1 pH meter, Orion model 710A

6.2 pH electrode, Orion Ross® combination electrode.

6.3 Buffers. pH 4.00, pH 7.00 and pH 10.0; these buffers are commercially prepared and are no to be used past the expiration dates on the bottles.

6.4 Deionized water, for rinsing the electrode.

6.5 Storage solution, Orion (catalog no. 910001).

6.6 Cleaning solutions, 1 N HCl and 1 N NaOH.

VII. Quality Control

7.1 Refer to the calibration procedures outlined in Section 5.1. These procedures are to be performed before beginning a set of measurements, and may be repeated at intervals during a long set of measurements at the study director's discretion.

7.2 The electrode calibration may be checked between measurement by measuring the pH of one or more standard buffers every three hours.

Originated by: Pamela F. Smith Date 4/18/01

Approved by: Donald L. Mizner (for D. McCauley) Date 4/18/01
Laboratory Manager

Standard Operating Procedure
for
Using the Mettler AE 240 Analytical Electronic Balance
and
the Mettler PJ 400 Top Loading Balance

I/II. Scope/Purpose

1.1 This Standard Operating Procedure (SOP) describes the general procedure to be followed for the operation, calibration, repair and maintenance of the Mettler AE 240 and PJ 400 electronic balances.

III. References

3.1 Balance Manuals, which are available near each balance.

IV. Definitions

4.1. A maintenance log is a book or other like bound volume in which are kept records of routine maintenance, replacement of expendables, or repairs performed on the instrument. In addition, it shall contain the following information:

4.1.1. Name and make of the instrument;

4.1.2. Serial Number;

4.1.3. The name and model number of any accessories attached to the instrument;

4.1.4. Current location and date of initial creation of the maintenance log;

4.1.5. Location and phone number of the Balance Supervisor (see below)

4.1.6. The printed names, signatures, and initials of all persons making entries into the log;

4.1.7. A list of the error codes used in the book with an explanation for each.

4.1.8. Weight traceability certificate.

4.2. The Balance Supervisor is an individual appointed by management. The Balance Supervisor will have responsibility for scheduling routine balance service and all other balance use activities which require management by a central authority.

V. Procedures

5.1. Operation

5.1.1. No operator shall use the balance until properly trained.

5.1.2. Verify that the balance service interval sticker is current (i.e., the "date of next service" indication is a future date, not a present or past date).

5.1.3. Verify that the balance is level using the built-in bubble indicators (if present). Adjust if necessary.

5.1.4. Check the balance accuracy using the autocalibration procedure daily on the Mettler AE 240 analytical balance, following the instructions in the manual (and posted near the balances). Monthly, perform a manual check with Instrument Lab certified calibration weights, according to instructions in the balance manuals for the Mettler AE 240 and the Mettler PJ400 top loading balance. Record this information in the calibration logbook.

5.1.5. If the balance passes the appropriate accuracy check test, record the actual weights and accuracy check test weights in the study records. If the accuracy check test is not associated with a regulated study, record the weights in the instrument maintenance log.

5.1.6. If the balance did not pass the accuracy test, the particulars of the failure should be recorded in the instrument maintenance log book, the balance should be labeled as out of calibration and not be used, and the Balance Supervisor should be notified.

5.2. Maintenance

5.2.1. User maintenance is limited to cleaning the pan and pan housing area of debris following use.

5.2.2. Whenever spillage of radioactive materials occurs on the balance pan or in the pan housing area, cleanup must be verified with a radioactivity detector.

5.2.3. Whenever an operator suspects a balance is not functioning correctly, the operator shall label the balance "out of service" and the Balance Supervisor will be notified.

5.2.4. Balance repairs shall be performed by professional service technicians only.

5.2.5 Yearly routine maintenance is performed by a Mettler technician. The date of maintenance and traceability certificates are kept with the calibration logbook.

5.3. Appendices.

5.3.1. None.

5.4. Safety

5.4.1 Outside of the hazards of exposure to materials weighted (which are covered by other pertinent safety regulations) there are no hazards associated with the operation of balance.

5.4.2. Lab coat and glasses are required for all sample handling. Gloves are required for safe handling of radioactive other hazardous substances.

5.4.3. Spills should be wiped up immediately and the are decontaminated as needed. Clamping of sample vials will reduce spillage hazards.

VI. Quality Control

6.1 Refer to the calibration procedures outlined in the Procedures Section. These procedures are to be preformed before beginning a set of measurements, and may be repeated at intervals during a long set of measurements at the study director's discretion.

Originated by: Pamela F. Smith Date 4/10/01

Approved by: Denis J. McCauley Date 4/9/01
Laboratory Manager