FINAL
BASIS OF DESIGN REPORT

OPERABLE UNIT 1
Callahan Mine Superfund Site
Brooksville, Maine

Prepared for:

Maine Department of Transportation
Augusta, Maine

Prepared by:

MACTEC Engineering and Consulting, Inc.
511 Congress St.
Portland, ME 04101

September 23, 2010

MACTEC PROJECT: 3612062047

SDMS DocID 454668

FINAL
BASIS OF DESIGN REPORT

OPERABLE UNIT 1
Callahan Mine Superfund Site
Brooksville, Maine

Prepared for:

Maine Department of Transportation
Augusta, Maine

Prepared by:

MACTEC

MACTEC Engineering and Consulting, Inc.
511 Congress St.
Portland, ME 04101

September 23, 2010

MACTEC PROJECT: 3612062047

STATE OF MAINE
MARK A. PETERS
No. 6631
LICENSED
PROFESSIONAL ENGINEER

Peter S. Baker, C.G.
Principal Project Manager

Mark A. Peters, P.E.
Principal Engineer

TABLE OF CONTENTS

ACRONYMS AND ABBREVIATIONS ii

EXECUTIVE SUMMARY ES-1

1.0 INTRODUCTION 1-1
1.1 GENERAL-PROJECT SCOPE 1-1
1.2 PROJECT WORK AREA 1-4
1.2.1 Residential Use Area 1-4
1.2.2 PCB-Contaminated Soil and Mine Operations Area 1-6
1.2.3 Petroleum-Contaminated Soil Commingled with CERCLA Waste in Mine Operations Area 1-7
1.2.4 Surface Water Management and Ore Pad 1-8
1.2.5 Surface Water Drainage for Mine Operations Area 1-10
1.2.6 Stockpile Management 1-10

2.0 JURISDICTIONAL AND REGULATORY REQUIREMENTS 2-1

3.0 CLEANUP LEVELS 3-1

4.0 ESTIMATED CLEANUP AREAS AND VOLUMES 4-1

5.0 INTERIM STOCKPILE AREA 5-1

6.0 VALUE ENGINEERING SCREEN 6-1

7.0 REFERENCES 7-1

LIST OF FIGURES

1 Site Location Map
2 Site Features
3 Residential Use Area Remediation
4 Mine Operations Area Conceptual Ditches and Sedimentation Ponds
5 Conceptual Drainage and Stockpile Details
6 Conceptual Tailings Impoundment Interim Stockpile and Run-on Controls
7 Areas Exceeding PCB PRGS and DRO/GRO Cleanup Goals

LIST OF APPENDICES

A RI Data for Contaminants of Concern for Residential Use Area and Mine Operations Area

B Value Engineering Screen

C Technical Specifications

ACRONYMS AND ABBREVIATIONS

ABA	acid base accounting
bgs	below ground surface
CERCLA	Comprehensive Environmental Response, Compensation, and Liability Act
DRO	diesel range organics
GRO	gasoline range organics
ICP-MS	inductively coupled plasma and mass spectrography
MCL	Maximum Contaminant Level
MEG	Maximum Exposure Guideline
MEDEP	Maine Department of Environmental Protection
MaineDOT	Maine Department of Transportation
mg/kg	milligrams per kilogram
NCP	National Oil and Hazardous Substances Pollution Contingency Plan
OSWER	USEPA Office of Solid waste and Emergency Response
OU	operable unit
PCB	polychlorinated biphenyl
ppm	parts per million
RI	remedial investigation
ROD	Record of Decision
Site	Callahan Mine Superfund Site
SPLP	Synthetic Precipitation Leaching Procedure
USEPA	U.S. Environmental Protection Agency
UST	underground storage tank
UTL	upper tolerance level
VE	value engineering
XRF	x-ray fluorescence

EXECUTIVE SUMMARY

This Design Basis report was prepared to provide the conceptual description and design basis for proposed remedial actions for soil and mine waste material for Operable Unit (OU) 1 at the Callahan Mine Superfund Site in the village of Harborside in the Town of Brooksville, Maine.

The U.S. Environmental Protection Agency is the lead federal agency for the cleanup action. The Maine Department of Environmental Protection (MEDEP) is the lead State agency for the implementation of the OU1 cleanup actions on behalf of the State of Maine. References to the Owner refer to the MEDEP.

The major scope elements of the OU1 project consist of 1) excavation and on-site disposal, at the Tailings Impoundment, of soil from the residential-use lots along Old Mine Road contaminated with arsenic, lead, and thallium exceeding residential use cleanup levels, 2) restoration of the residential use lots, 3) excavation and off-site disposal of soil from the former Mine Operations Area contaminated with polychlorinated biphenyls (PCBs) exceeding recreational use cleanup levels, and 4) excavation and off-site disposal of petroleum-contaminated soil commingled with Comprehensive Environmental Response, Compensation, and Liability Act waste at the former Mine Operations Area exceeding Park User (i.e., recreational) cleanup levels. In addition, depending on the implementation plan for the excavation of the PCBs and commingled petroleum-contaminated waste, the Contractor may be asked to implement the following optional work items: excavation of the former Ore Pad and additional areas of the Mine Operations Area to provide better drainage, sediment control, and minimize discharge of run-off with metal concentrations above water quality criteria and stability and drainage controls for the Tailings Impoundment; including storm water run-on and run-off controls and/or stabilization measures (that could include improved internal drainage) at the Tailings Impoundment.

A value engineering (VE) screen was completed for the Callahan Mine Site OU1 remedial design. The VE screen identified several components of the design that are critical items with respect to cost. The remedial design has taken these items into consideration.

1.0 INTRODUCTION

This Design Basis report was prepared to provide the conceptual description and design basis for proposed remedial actions for soil and mine waste material for Operable Unit (OU) 1 at the Callahan Mine Superfund Site (Site) in the village of Harborside in the Town of Brooksville, Maine.

The Site is located approximately 15 miles west of the Town of Blue Hill and 35 miles west of the Town of Bar Harbor on the northwest side of the Cape Rosier peninsula on Penobscot Bay. The Site includes the former Callahan Mine property, an elongated 120-acre property oriented north-south and accessed from Goose Falls Road (Figure 1) and the associated areas where contamination has come to be located. Goose Pond and Holbrook Island Sanctuary State Park are immediately east of the Site property. Private residences and seasonal homes are located adjacent to the Site property on Goose Falls Road and Cape Rosier Road. There are three residential use properties on Old Mine Road, the main entrance to the site, that are used on a seasonal basis.

Intermittent exploration and mining for copper and zinc occurred at the Site from the 1880s to the 1970s. For five years from 1968 through 1972, the massive-sulfide ore deposits were mined with an open pit mine in the drained Goose Pond estuary. Copper, lead, and zinc ores were crushed, milled, and concentrated on-site, and the concentrate shipped off site for smelting. Waste rock and tailings were disposed of on-site. Figure 2 shows major features at the Site.

The Site is a Superfund site and was added to the U.S. Environmental Protection Agency (USEPA) National Priorities List in September 2002. The Site is undergoing investigation and clean-up activities pursuant to the Comprehensive Environmental Response, Compensation, and Liability Act (CERCLA) and the National Oil and Hazardous Substances Pollution Contingency Plan (NCP). The USEPA is the lead federal agency for the cleanup action. The Maine Department of Environmental Protection (MEDEP) is the lead State agency for the implementation of the OU1 cleanup actions on behalf of the State of Maine. References to the Owner refer to the MEDEP.

1.1 GENERAL-PROJECT SCOPE

The major scope elements of the OU1 project consist of 1) excavation and on-site disposal, at the Tailings Impoundment, of soil from the residential-use lots along Old Mine Road contaminated

with arsenic, lead, and thallium exceeding residential use cleanup levels, 2) restoration of the residential use lots, 3) excavation and off-site disposal of soil from the former Mine Operations Area contaminated with polychlorinated biphenyls (PCBs) exceeding recreational use cleanup levels, and 4) excavation and off-site disposal of petroleum-contaminated soil commingled with Comprehensive Environmental Response, Compensation, and Liability Act waste at the former Mine Operations Area exceeding Park User (i.e., recreational) cleanup levels. In addition, depending on the implementation plan for the excavation of the PCBs and commingled petroleum contaminated waste, the Contractor may be asked to implement the following optional work items: excavation of the former Ore Pad and additional areas of the Mine Operations Area to provide better drainage, sediment control, and minimize discharge of run-off with metal concentrations above water quality criteria and stability and drainage controls for the Tailings Impoundment; including storm water run-on and run-off controls and/or stabilization measures (that could include improved internal drainage) at the Tailings Impoundment.

The remedial design reflects cleanup of the residential use lots to meet criteria for residential use and cleanup of Mine Operations Area soil contaminated with PCBs as well as Mine Operations Area soil contaminated with petroleum comingled CERCLA waste to meet criteria for anticipated future recreational use. These remedial actions are being performed pursuant to the USEPA Record of Decision (ROD) for OU1 (USEPA, 2009). In April 2010, USEPA divided the selected remedy described in the OU1 ROD into two components: "new" OU1 which included the activities described above, and OU3 which included all other components of the "old" OU1 ROD. The State of Maine is obligated to perform the remediation in order to implement the work required under the Administrative Settlement Agreement and Order on Consent for Remedial Design for OU1 ROD and OU2 Early Action.

The preparation of the remedial design is based on the approach set forth in the OU1 ROD as modified by USEPA in April 2010. The components of the proposed remedial actions include:

Residential Use Area

- Performing pre-excavation characterization of Residential Use Area soil to delineate contamination extent exceeding cleanup levels;
- Excavation of soil (including Old Mine Road) containing arsenic, lead, and thallium above cleanup levels in the residential use area of the Site to a depth at which cleanup level exceedances no longer occur and disposal of excavated material on site at the Tailings Impoundment;

- Restoring excavated lawn areas by backfilling with clean borrow and topsoil, grading, fertilizing, and seeding;
- Restoring excavated garden and landscaped areas by backfilling with clean borrow and topsoil, grading, fertilizing, mulching, and installing plantings similar to those removed; and
- Restoring excavated driveways and roadway by backfilling with clean gravel, grading, and compacting.

Establishing Interim Stockpile Area

- Preparing for approval grading, cover, and drainage plans for stockpiling excavated Residential Use Area soil at the Tailings Impoundment;
- Covering stockpiled material in a manner to prevent erosion, route runoff away from the Tailings Impoundment, and minimize infiltration to the Tailings Impoundment; and
- Implementing measures, as necessary, to ensure the stability of the Tailings Impoundment after the increase in loading from any material placed in a stockpile on the Tailings Impoundment.

PCB-Contaminated Soil

- Performing pre-excavation characterization of PCB contaminated soil to refine estimates of PCB-contamination extent equal to or exceeding 50 parts per million (ppm);
- Excavating soil with PCB concentrations equal to or greater than 50 ppm for disposal in a hazardous waste landfill permitted for PCB disposal (or at a PCB disposal facility approved under 40 CFR Part 761)
- Excavating soil with PCB concentrations greater than 1 ppm but less than 50 ppm for disposal of at a facility permitted, licensed, or registered to manage municipal solid waste, non-municipal non-hazardous solid waste, or a permitted hazardous waste landfill or PCB disposal facility;
- Characterizing and shipping excavated PCB-contaminated soil in accordance with the requirements of the disposal facility;
- Grading of excavated areas to blend excavation limits smoothly into surrounding grades, eliminating steep slopes, and providing proper drainage; and
- Grading of the Ore Pad Area, as necessary, to prevent discharge of surface water with high levels of metals into Dyer Cove.

Petroleum-Contaminated Soil Commingled with CERCLA Waste

- Performing pre-excavation characterization to delineate extent of petroleum contamination areas exceeding cleanup levels;
- Excavating petroleum-contaminated soil commingled with CERCLA waste and exceeding the following:

Tier 2 Cumulative Risk-Based Soil Remediation Guidelines for Petroleum Target Compounds and Hydrocarbon Fractions (Table 5, Park User) as listed in Remediation Guidelines for Petroleum Contaminated Sites in Maine, Maine Department of Environmental Protection, Bureau of Remediation and Waste Management, effective date December 1, 2009;

- Characterizing, shipping, and disposing excavated petroleum-contaminated soil with commingled CERCLA waste in accordance with the requirements of the disposal facility;
- Grading of excavated areas to blend excavation limits smoothly into surrounding grades, eliminating steep slopes, and providing proper drainage; and
- Grading and installation of sediment control structures as necessary, to prevent discharge of surface water with high levels of metals into Dyer Cove.

1.2 PROJECT WORK AREA

This subsection summarizes existing conditions at project work areas.

1.2.1 Residential Use Area

The residential use area comprises three properties along Old Mine Road which were identified as Lots A, B, C, and D during the remedial investigation (RI) (Figure 3). Lots B and C are, in fact, part of the same property. Each lot typically consists of a residence and one or more garages or sheds, although Lot B is a garage with a second floor apartment associated with Lot C. Bedrock outcrops are extensive and prominent, and the buildings are typically shoe-horned between the outcrops, sometimes building around them. Building foundations include field stone and mortar, concrete block, and poured concrete. The buildings are served by drilled wells with water lines that in some instances run above ground and between buildings. Available information indicates that domestic wastewater is disposed of by on-site (septic tank and leach field) treatment systems. At Lots B and C, aboveground piping is used to transport wastewater from Lot B to a treatment system shared with the main residence on Lot C. Aboveground piping also carries drinking water from a well at Lot B to Lot C. Approximate locations of water supply and waste water disposal system components, if known, are shown on Residential Lot Restoration Plan figures. Actual locations must be verified by the implementation contractor so as to avoid damage to system components. Sensitive foundations, water supply systems, and waste water treatment/disposal systems must all be protected from damage during site work or replaced/restored to meet applicable/relevant/appropriate codes and requirements. The abundance of outcrops notwithstanding, Lots A, C, and D all have lawns and ornamental gardens and plantings. Lawns,

gardens, plantings, and significant features removed or damaged during site work must be restored or replaced, unless otherwise directed by the Owner, consistent with the Restoration Plans provided. Excavation beyond the excavation limits in the Restoration Plans will require the implementation Contractor to develop and obtain approval of a revised Restoration Plan from the property owners and Owner.

The RI included surface soil sampling in residential areas bordering the northern portion of the former Callahan Mine property along Old Mine Road and Goose Falls Road. In addition, residential areas south of the former Callahan Mine property were sampled along the southern access road. These samples were used to assess whether surface soils had been affected by fugitive dust and/or contaminated fill.

Fifty residential area soil samples were collected for on-site x-ray fluorescence (XRF) analysis for metals, and six were collected for off-site metals analysis by inductively coupled plasma and mass spectrography (ICP-MS). The results for field XRF metals analyses are summarized in RI Appendix R, and results for ICP-MS metals analysis are summarized in RI Table 4.1-11 (MACTEC, 2009a). Summary statistics for the XRF analytical results are shown in the following table. XRF data are shown because they represent a larger data set than the ICP-MS data. The XRF and off-site data for arsenic, lead, and thallium collected during the RI for the Residential Use Area can be found in Appendix A.

Summary Statistics for Residential Area Surface Soil On-Site XRF Analytical Results - Arsenic, Cadmium, Copper, Lead, and Zinc

Analyte	Background Concentration	Frequency of Detection	Range of Detected Concentrations	Average Conc.	Percent > Background
Arsenic	15	38 / 50	10 - 86	24	52
Cadmium	NC	2 / 50	37 - 39	21	NC
Copper	99	41 / 50	25 - 1,400	297	46
Lead	124	48 / 50	22 - 1,500	395	58
Zinc	177	50 / 50	59 - 11,000	1,706	68

Notes:
All concentrations in milligrams per kilogram (mg/kg).
Statistics based on on-site XRF analyses for metals.
Average calculations use half the detection limit for non-detects.
Background concentration is based on on-site analysis 95-percent upper tolerance level (UTL).
NC = not calculated.
Source: MACTEC, 2009b, Subsection 4.1

Higher concentrations of metals contamination were observed primarily in the vicinity of Old Mine Lane. Arsenic, lead, and thallium (not shown above) in surface soil at residential use areas along Old Mine Road exceed USEPA risk management guidance for residential exposure based on the findings of the risk assessment performed as part of the RI. Metals data suggest that airborne migration of dust during mine operations most likely occurred and affected surface soils peripheral to Old Mine Road.

If not completed prior to award of this contract, the Contractor will be responsible for additional sampling to confirm the extent contamination exceeding cleanup levels at the Residential Use Area.

1.2.2 PCB-Contaminated Soil and Mine Operations Area

The Mine Operations Area is the former location of the machinery that was used to mill and process the ore that was staged at the Ore Pad. At least two underground fuel storage tanks were located in this area (2,000 and 4,000 gallons), but these were removed in 1987. The Mine Operations Area included a machine shop, and assay laboratory, the two rock crushers, and the concentrator building. All of these structures have been removed from the Site; except for some of the building foundations and breached walls of the concentrator building.

The Mine Operations Area is underlain by variable thicknesses of waste rock fill and native soil consisting of clay and silt overlying glacial till. The overburden thickness varies greatly from 12.5 feet to as much as 82 feet. In general, a thin layer (2 to 3 feet) of sandy and gravelly fill overlies the fine grained stratified clay and silt. In the absence of the clay and silt, the gravelly, sandy fill extends to bedrock (12.5 feet) near the former flotation building (near SB-614). The clay and silt varies in thickness from 10 to 31 feet across the Site. Up to 72 feet of till was encountered at SB-610, indicating the presence of a narrow and deep channel between the northern and southern ridges that dominated the pre-mine topography of the Site.

During the RI, 34 soil samples were collected at the Mine Operations Area for analysis for PCBs, seven were collected for on-site XRF analysis for metals, and five were collected for off-site metals analysis by ICP-MS. The results of PCB analyses are summarized in RI Table 4.1-1, results for field XRF metals screening are summarized in RI Appendix R, and results for ICP-MS metals analysis are summarized in RI Table 4.1-3 (MACTEC, 2009a). Summary statistics for the PCB

and XRF analytical results are shown in the following table. XRF data are shown because they represent a larger data set than the ICP-MS data. The XRF and off-site data for arsenic, lead, PCBs, DRO, and GRO collected during the RI for the Mine Operations Area can be found in Appendix A.

Summary Statistics for Mine Operations Area Surface Soil Analytical Results – PCBs, Arsenic, Cadmium, Copper, Lead, and Zinc

Analyte	Background Concentration	Frequency of Detection	Range of Detected Concentrations	Average Conc.	Percent > Background
Aroclor-1242	NC	9 / 34	0.051 - 7,900	245	NC
Aroclor-1248	NC	13 / 34	0.16 - 1,800	59	NC
Arsenic	15	7 / 7	34 - 99	62	100
Cadmium	NC	6 / 7	43 - 98	58	NC
Copper	99	7 / 7	1,900 - 21,000	7,543	100
Lead	124	7 / 7	520 - 3,000	1,613	100
Zinc	177	7 / 7	12,000 - 64,000	28,714	100

Notes:
All concentrations in mg/kg.
Statistics based on off-site analysis for PCBs and on-site XRF analysis for metals.
Average calculations use half the detection limit for non-detects.
Background concentration is based on on-site analysis 95-percent UTL.
NC = not calculated
Source: MACTEC, 2009b, Subsection 4.1

The presence of PCBs in the Mine Operations Area may be related to former transformers located near the southern portion of the Primary and Secondary Crusher buildings. A 10- by 20-foot buried concrete pad was identified that may have served as a transformer location serving the Secondary Crusher building. Very high concentrations of PCBs in surface soils suggest direct discharge of transformer oils to the ground surface. PCBs, arsenic, and lead in surface soil at the Mine Operations Area exceed USEPA risk management guidance for recreational exposure based on the findings of the risk assessment performed as part of the RI. In addition, PCB concentrations exceeded Toxic Substances Control Act PCB management standards.

1.2.3 Petroleum-Contaminated Soil Commingled with CERCLA Waste in Mine Operations Area

Two test pits completed in the Mine Operations Area showed the presence of oily soils. Oil stained subsurface soils were exposed in TP-7119 and TP-7124. TP-7124 was excavated in what is interpreted to be a tank grave associated with underground storage tanks (USTs) reportedly removed in 1987. Oil stained silt and clay materials were observed extending from 3 to 6 feet below ground surface (bgs). The sample collected at 3 feet bgs showed the presence diesel range

organics (DRO) and gasoline range organics (GRO) at concentrations of 13,000 mg/kg and 390 mg/kg, respectively.

TP-7119 was excavated downgradient of the tank grave depression. Oil stained soils were observed at the interface between waste rock and the underlying silty clay at 9 feet bgs. The sample collected at 9 feet bgs showed the presence DRO and GRO at concentrations of 4,900 mg/kg and 160 mg/kg, respectively. The presence of these DRO and GRO has been attributed to fuel storage and dispensing. The concentrations of DRO and GRO exceeded Maine Petroleum Remediation Guidelines in effect at the time of the RI and may or may not exceed current Remediation Guidelines for Petroleum Contaminated Sites in Maine, effective date December 1, 2009. The Contractor will be responsible for additional sampling to assess if and to what extent remediation of petroleum-contaminated soil is required under the current guidelines.

1.2.4 Surface Water Management and Ore Pad

The implementation plan shall take into consideration whether the removal of the waste from the Mine Operations Area and the creation of direct drainage to Dyer Cove would result in an unacceptable surface water discharge from the Ore Pad to Dyer Cove. The contractor shall include measures, to be implemented at the discretion of the owner, to remove the Ore Pad material and place this material in the stockpile created for the residential soils and non-PCB/petroleum contaminated mine waste.

The Ore Pad is where ore was stockpiled prior to crushing and milling (Figure 2). The unlined Ore Pad covers approximately 2.1 acres and contains an estimated 16,000 cubic yards of waste rock. Today, fragments of ore and mineralized rock are visible over much of the Ore Pad. Surface soil in the area is conspicuously limonite-stained, imparting a yellow-brown to orange-brown, and brownish-black color and coating on soil and rock surfaces that stretches from the top of the exposed slope downhill to the Mine Operations Area. In addition to zinc-, copper-, and lead-sulfide ore fragments, the soils in this area also have a considerable number of blue and blue-green mineral fragments and rarer whitish mineral coating that may have been supergene ore minerals (copper-, lead-, and zinc-carbonates and -sulfates), or hydrated copper sulfates and soluble sulfate salts produced from more recent weathering of material remaining on the Ore Pad. The primary ore crushers were located downslope from the Ore Pad.

The waste rock fill at the Ore Pad is relatively thin and is mixed together with the till at the till contact. The till varies in thickness up to 11 feet. Bedrock was encountered at depths ranging from 9 to 15 feet bgs. The Ore Pad has some of the most highly oxidized surface soils containing mineralized waste rock and ore observed at the Site.

During the RI, two surface soil samples were collected from the Ore Pad for off-site metals analysis by ICP-MS. The results of ICP-MS metals analysis are summarized in RI Table 4.1-2 (MACTEC, 2009a). Summary statistics for the analytical results are shown in the following table.

Summary Statistics for Ore Pad Surface Soil Off-Site Analytical Results - Arsenic, Cadmium, Copper, Lead, and Zinc

Analyte	Background Concentration	Frequency of Detection	Range of Detected Concentrations	Average Concentration	Percent >Background
Arsenic	14	2 / 2	46 - 50	48	100
Cadmium	0.15	2 / 2	0.37 - 24	12	100
Copper	11	2 / 2	6,600 - 14,000	10,300	100
Lead	37	2 / 2	350 - 1,600	975	100
Zinc	89	2 / 2	110 - 8,800	4,455	100

Notes:
All concentrations in milligrams per kilogram (mg/kg).
Statistics based on off-site ICP-MS analyses for metals.
Average calculations use half the detection limit for non-detects.
Background concentration is based on off-site 95-percent UTL
Source: MACTEC, 2009b, Subsection 4.1

Data collected during the RI to assess the potential for acid rock drainage included whole rock analysis, mineralogy, acid base accounting (ABA), Synthetic Precipitation Leaching Procedure (SPLP), field paste pH, and field leaching tests. Field leach tests indicated that cadmium and lead could leach at concentrations above the federal drinking water Maximum Contaminant Level (MCL) and/or the Maine Maximum Exposure Guidelines for Drinking Water (MEGs). In addition, SPLP results show potential for antimony, cadmium, copper, and lead to leach at concentrations above the MCL/MEG. Other metals that may leach include aluminum, cobalt, and zinc. ABA and paste pH data indicated net acid producing conditions persist at the Ore Pad, though some samples have a net neutralizing potential. Waste rock at the Ore Pad is considered a major source of groundwater contamination at the Site.

Arsenic and lead in surface soil at the Mine Operations Area exceed USEPA risk management guidance for recreational exposure based on the findings of the risk assessment performed as part of the RI.

The estimated area and volume of material at the Ore Pad are provided in Section 4.0.

Excavated areas will be graded to blend excavation limits smoothly into surrounding grades, eliminate steep slopes, and provide proper drainage.

1.2.5 Surface Water Drainage for Mine Operations Area

The implementation plan shall include drainage measures to reduce erosion and transport of surface material from the Mine Operations Area to Goose Pond. These measures may include construction of drainage ditches and storm water sedimentation ponds. Figure 4 provides a conceptual depiction in plan view of drainage measures at the Mine Operations Area. Figure 5 provides conceptual details of the drainage measures.

1.2.6 Stockpile Management

The implementation plan shall include measures to ensure that surface run-off from the stockpile does not adversely impact Goose Pond and that the stability of the Tailings Impoundment is acceptable during the period of interim storage of material prior to the implementation of OU3. Stockpile management may include measures to 1) reduce storm water run-on and infiltration at the Tailings Impoundment, 2) increase the overall stability of the Tailings Impoundment; and 3) reduce storm water erosion and transport of surface material to Goose Pond. These measures may include construction of drainage ditches and/or swales and storm water sedimentation ponds. Internal drainage controls may also be required if the stability analysis supports the need for such measures to promote the stability of the Tailings Impoundment. Figure 6 provides a conceptual depiction in plan view of drainage measures at the Tailings Impoundment Interim Stockpile Area. Figure 5 provides conceptual details of the drainage measures.

2.0 JURISDICTIONAL AND REGULATORY REQUIREMENTS

The Site is a Superfund site and is undergoing investigation and clean-up activities pursuant to CERCLA and the NCP. USEPA is the lead regulatory agency at the Site.

CERCLA and the NCP require that on-site Superfund remedial actions must attain federal standards, requirements, limitations, or more stringent state standards determined to be legally applicable or relevant and appropriate to the circumstances at a given site. CERCLA on-site remedial response actions must only comply with all substantive requirements that are "applicable" or "relevant and appropriate," but not the administrative requirements, such as any requirement to obtain federal, state, or local permits (CERCLA §121(e)). The NCP defines on-site as "the areal extent of contamination and all suitable areas in very close proximity to the contamination necessary for implementation of the response action." The Residential Use Area is considered to be "on site". Off-site response actions must comply with both the substantive and administrative requirements of an applicable regulation.

3.0 CLEANUP LEVELS

The OU1 ROD established the following cleanup levels:

Residential Use Area Soil	
Arsenic	14 mg/kg
Lead	375 mg/kg
Thallium	15 mg/kg
Mine Operations Area PCB-Contaminated Soil	
PCBs	1 mg/kg

In addition, petroleum contaminated soil commingled with CERCLA waste at the Mine Operations Area will be cleaned up to meet Tier 2 Cumulative Risk-Based Soil Remediation Guidelines for Petroleum Target Compounds and Hydrocarbon Fractions (Table 5, Park User) as listed in Remediation Guidelines for Petroleum Contaminated Sites in Maine, Maine Department of Environmental Protection, Bureau of Remediation and Waste Management, effective date December 1, 2009.

4.0 ESTIMATED CLEANUP AREAS AND VOLUMES

The estimated areas and volumes exceeding cleanup levels based on data gathered during the RI are listed below. Actual areas and depths may differ based on field conditions and additional characterization to be performed by the Implementation Contractor.

Work Area	**Estimated Area, sq. ft.**	**Estimated Average Depth/Thickness, ft.**	**Estimated Volume, c.y.**
Residential Use Area	41,060	2	3,040
PCB-Contaminated Soil >1 ppm, < 50 ppm	26,708	2	1,980
PCB-Contaminated Soil ≥ 50 ppm	2,958	2	220
Petroleum-Contaminated Soil **	2,615	3	600
Ore Pad *	90,161	4.8	16,000

* Optional task depending on extent of funding available to Owner.
** Because of uncertainty in the delineation of petroleum-contaminated soil, volume estimated as twice that based on area and thickness.

With the exception of Old Mine Lane, the excavation at the Residential Use Area is not to extend beyond the residential lot boundaries unless directed by the Owner. Figures 3 and 7 show the estimated cleanup areas at the Residential Use Area and at the Mine Operations Area.

5.0 INTERIM STOCKPILE AREA

The Tailings Impoundment Area has been identified as the most likely area for the temporary stockpiling of material excavated from the Residential Use Area and the Ore Pad. The implementation plan developed by the contractor shall include the appropriate assessments to ensure that stability of the Tailings Impoundment. Additional stability controls, including run-on/run-off controls or internal drainage controls, may be necessary to meet acceptable stability criteria if the Tailings Impoundment is used as a stockpile. Material should be stockpiled in locations approved by USEPA and MEDEP. The design assumes that the stockpile should be placed at the western edge of the Tailings Impoundment and should be graded and covered to minimize infiltration, promote runoff, and prevent erosion. A clear area without stockpiled material should be maintained along the northern and southern berm. Material should not be stockpiled over the wetland area in the center of the Tailings Impoundment. Figure 6 provides a conceptual depiction of the stockpile area. The detailed implementation plan to be developed for OU1 may select another location for the stockpile based on a further evaluation of the estimated volume of material, nature of the material, and the results of the geotechnical analysis.

6.0 VALUE ENGINEERING SCREEN

A value engineering (VE) screen is required for all USEPA superfund lead cleanup actions. In the VE screen, the designer reviews the proposed process and identifies potential high cost design elements or subsystems that may become candidates for a formal VE study. Guidance for performing the VE screen is provided in the USEPA Remedial Design/Remedial Action Handbook EPA 540/R-95/059 and USEPA pamphlet Value Engineering (For Fund-Financed Superfund Remedial Design/Remedial Action Projects), OSWER 9355.5-24FS. A VE screen for the proposed OU1 actions is provided in Appendix B.

7.0 REFERENCES

MACTEC, 2009a. Final Remedial Investigation Report, Callahan Mine Superfund Site, Brooksville, Maine. April.

MACTEC, 2009b. Final Feasibility Study Report, Callahan Mine Superfund Site, Brooksville, Maine. July.

USEPA, 2009. Record of Decision, Operable Unit 1, Callahan Mine Superfund Site, Brooksville, Maine. September.

FIGURES

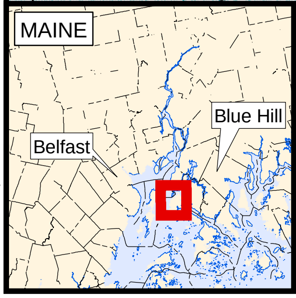

1:24,000 scale digital topographic map obtained from Maine Office of GIS at http://apollo.ogis.state.me.us/catalog

N

0 2,000 4,000 Feet

Prepared/Date: BRP 07/12/10 | Checked/Date: SWR 07/12/10

Figure 1
Site Location Map

OU1 Design
Callahan Mine Superfund Site
Brooksville, Maine
MACTEC, Inc.

Document: P:\Projects\mdot\Callahan Mine\6.0 GIS\MapDocuments\OU1 Design\OU1_Design_SiteMap_8x11.mxd   PDF: P:\Projects\mdot\Callahan Mine\6.0 GIS\Figures\OU1 Design\Figure 1.pdf   07/12/2010 8:18 AM   brpeters

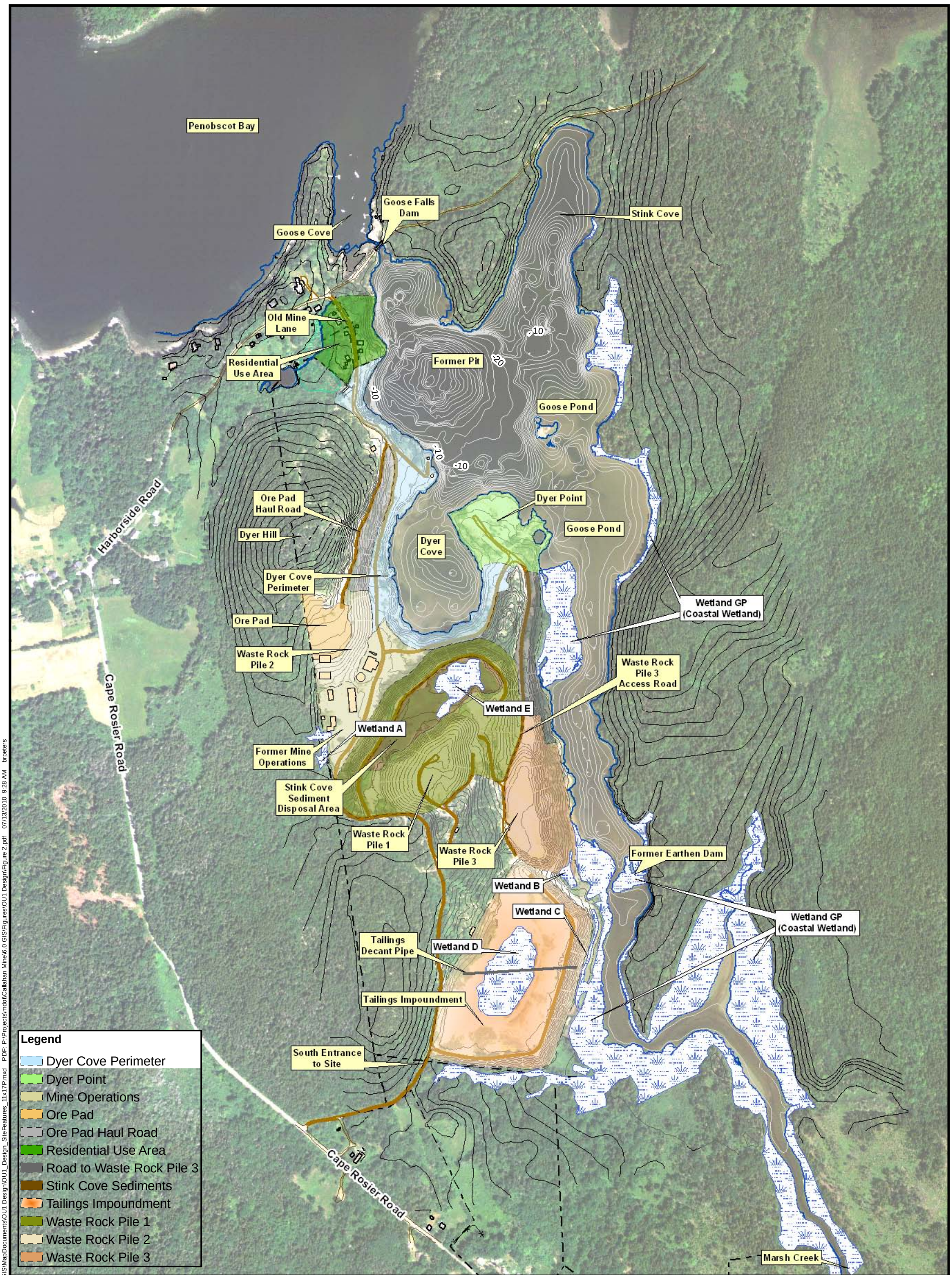

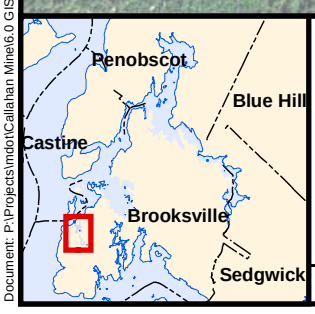

Note:
Contour intervals vary.
Off-site topo 10 foot
On-site topo 5 foot
Bathymetry 1 foot
Pit Bathymetry 20 foot

Legend
Bathymetric Contour
Delineated Wetlands

N
0 275 550 Feet

Prepared/Date: BRP 07/13/10 | Checked/Date: SWR 07/13/10

Figure 2
Site Features

OU1 Design
Callahan Mine Superfund Site
Brooksville, Maine
MACTEC, Inc.

Document: P:\Projects\mdot\Callahan Mine\6.0 GIS\MapDocuments\OU1 Design\OU1_Design_SiteFeatures_11x17P.mxd PDF: P:\Projects\mdot\Callahan Mine\6.0 GIS\Figures\OU1 Design\Figure 2.pdf 07/13/2010 9:28 AM brpeters

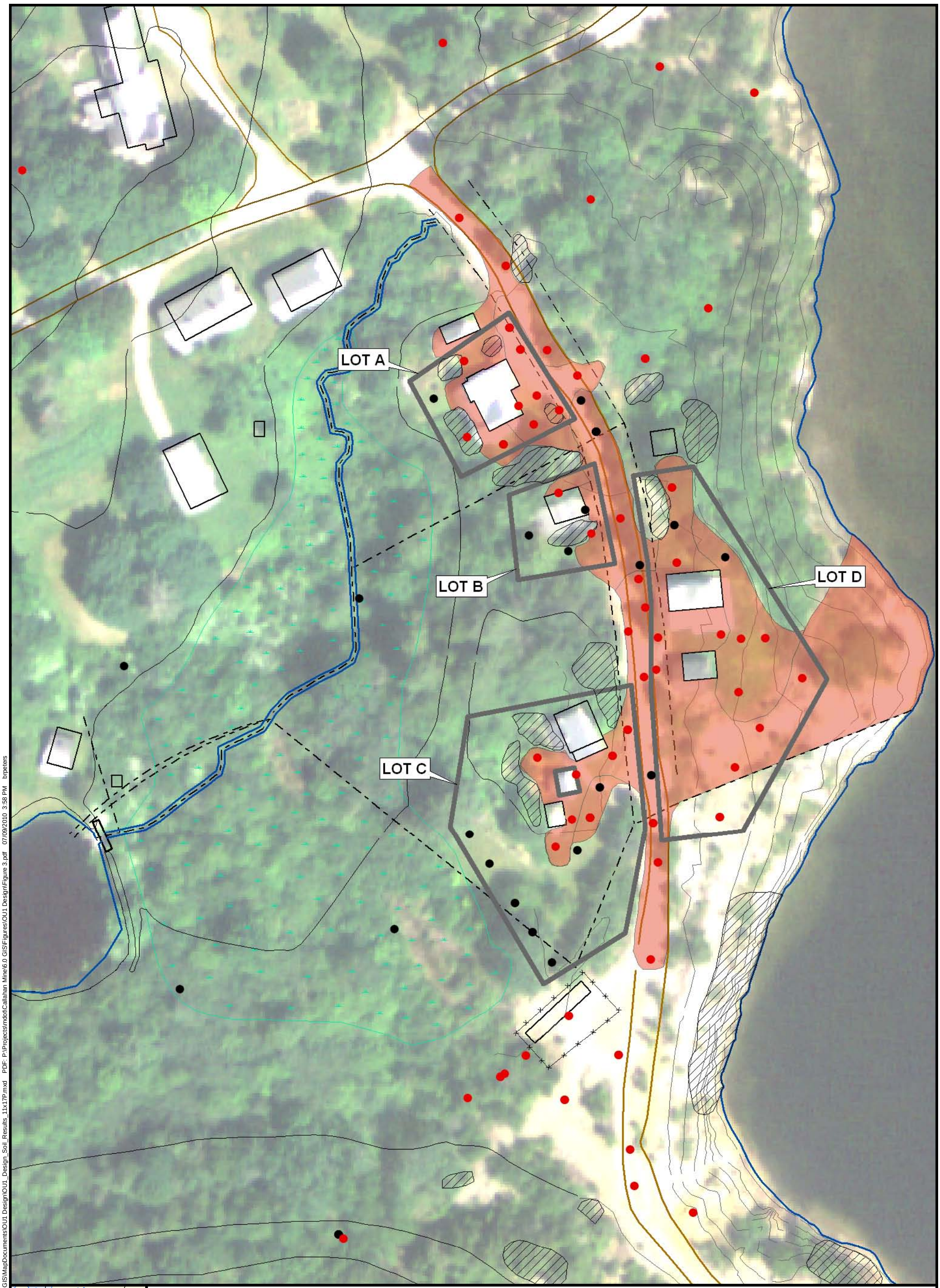

Legend

- Arsenic <= 14, Lead <= 375, and Thallium <= 15 mg/kg
- Arsenic > 14, Lead > 375, and Thallium > 15 mg/kg
- Bedrock Outcrops
- Risk Assessment Data Groups
- Area to be excavated - 41060 Sq. Feet
- Property Line

0 30 60 Feet

N

Prepared/Date: BRP 07/09/10 | Checked/Date: SWR 07/09/10

Figure 3
Residential Use Area Remediation

OU1 Design
Callahan Mine Superfund Site
Brooksville, Maine
MACTEC, Inc.

Document: P:\Projects\mdot\Callahan Mine\6.0 GIS\MapDocuments\OU1 Design\OU1_Design_Soil_Results_11x17P.mxd PDF: P:\Projects\mdot\Callahan Mine\6.0 GIS\Figures\OU1 Design\Figure 3.pdf 07/09/2010 3:58 PM brpeters

P:\Projects\CADD-PORT\Projects\Callahan Mine Site\OU1 Concept Design\OU1 Conceptual Design.dwg Thu, 23 Sep 2010 - 1:35pm tdonovan

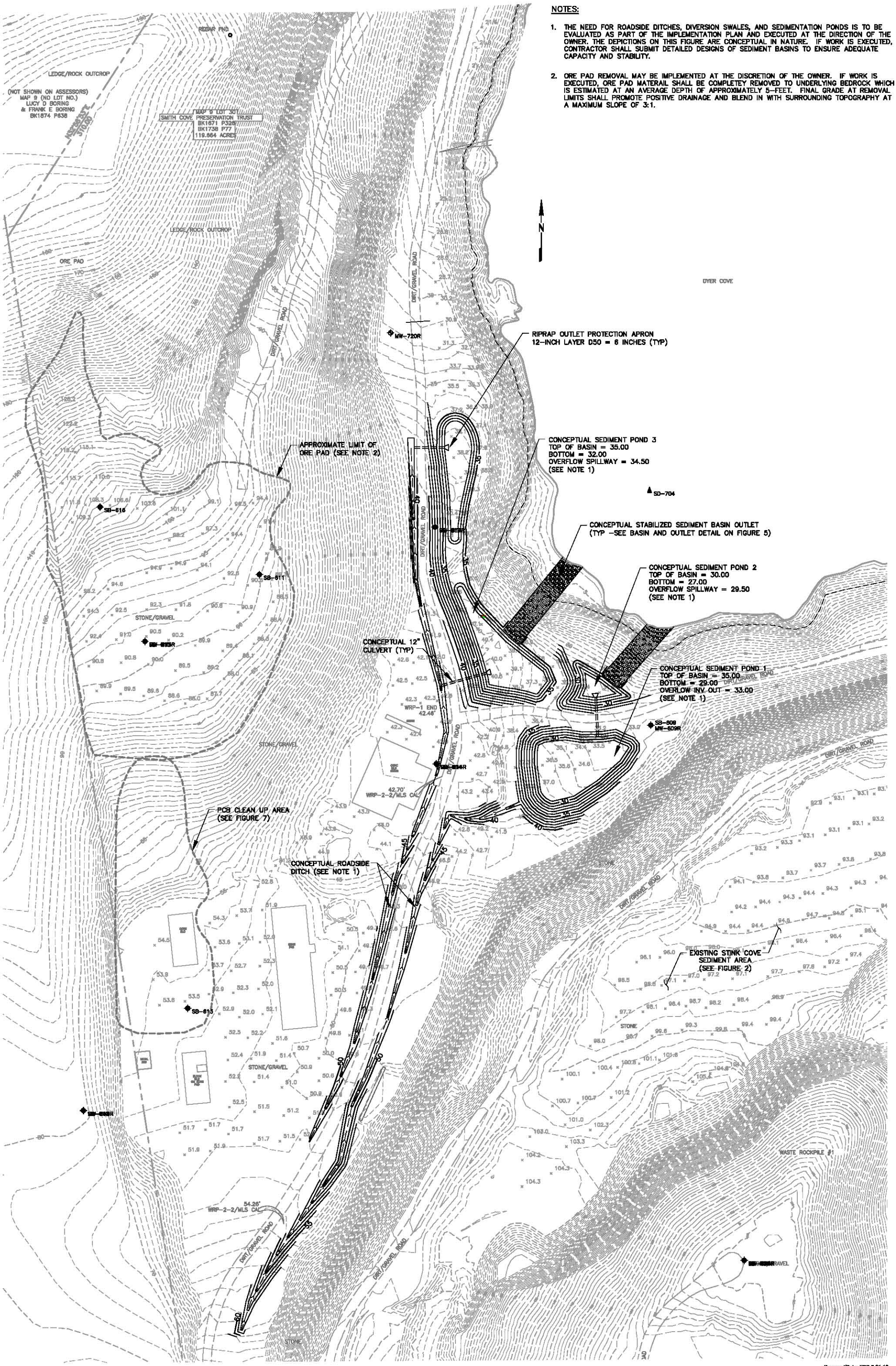

Prepared/Date: TDD 7-21-10
Checked/Date: MAP 7-23-10

NOT FOR CONSTRUCTION

0 25 50 100
SCALE IN FEET

OU1 DESIGN
CALLAHAN MINE SUPERFUND SITE
BROOKSVILLE, MAINE

MACTEC

FIGURE 4
MINE OPERATIONS AREA CONCEPTUAL
DITCHES AND SEDIMENTATION PONDS

NOTES:

1. THE NEED FOR ROADSIDE DITCHES, DIVERSION SWALES, AND SEDIMENTATION PONDS IS TO BE EVALUATED AS PART OF THE IMPLEMENTATION PLAN AND EXECUTED AT THE DIRECTION OF THE OWNER. THE DEPICTIONS ON THIS FIGURE ARE CONCEPTUAL IN NATURE. IF WORK IS EXECUTED, CONTRACTOR SHALL SUBMIT DETAILED DESIGNS OF SEDIMENT BASINS TO ENSURE ADEQUATE CAPACITY AND STABILITY.

2. ORE PAD REMOVAL MAY BE IMPLEMENTED AT THE DISCRETION OF THE OWNER. IF WORK IS EXECUTED, ORE PAD MATERAIL SHALL BE COMPLETEY REMOVED TO UNDERLYING BEDROCK WHICH IS ESTIMATED AT AN AVERAGE DEPTH OF APPROXIMATELY 5-FEET. FINAL GRADE AT REMOVAL LIMITS SHALL PROMOTE POSITIVE DRAINAGE AND BLEND IN WITH SURROUNDING TOPOGRAPHY AT A MAXIMUM SLOPE OF 3:1.

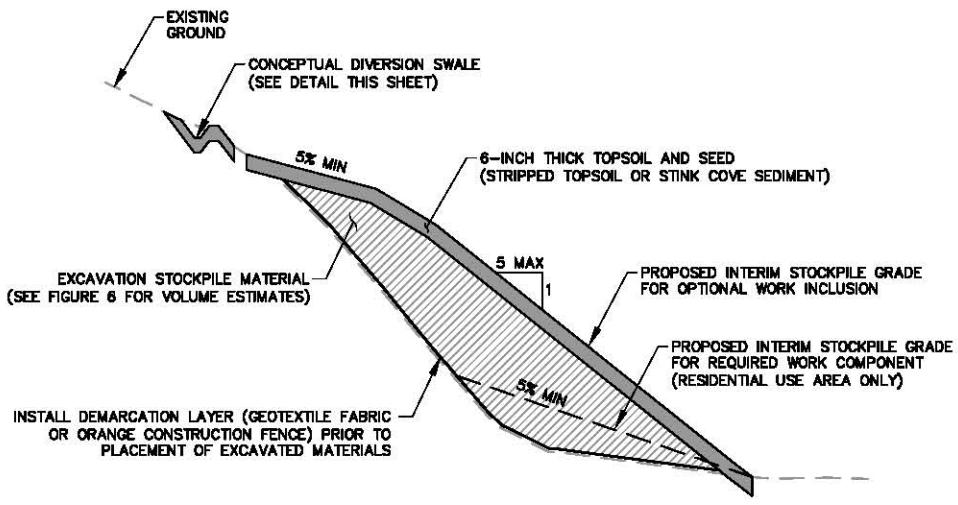

CONCEPTUAL TAILINGS IMPOUNDMENT INTERIM STOCKPILE SECTION
NTS

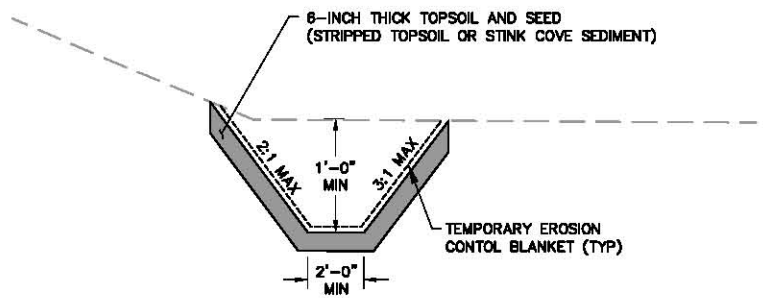

CONCEPTUAL ROADSIDE DITCH
NTS

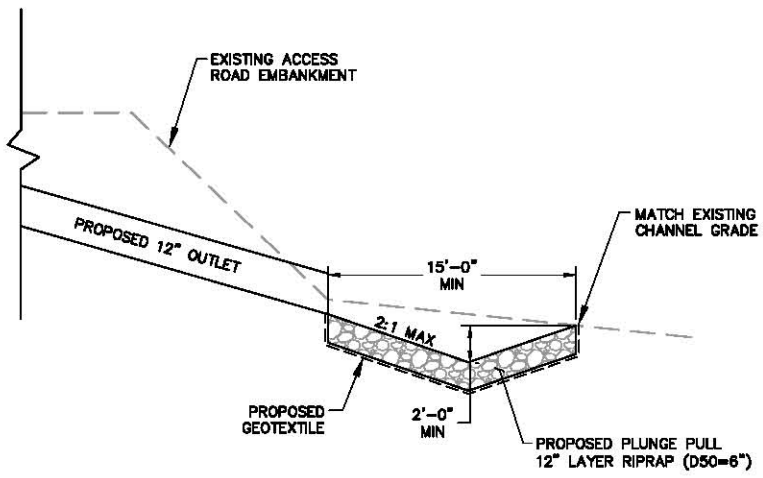

CONCEPTUAL PLUNGE POOL OUTLET PROTECTION DETAIL
NTS

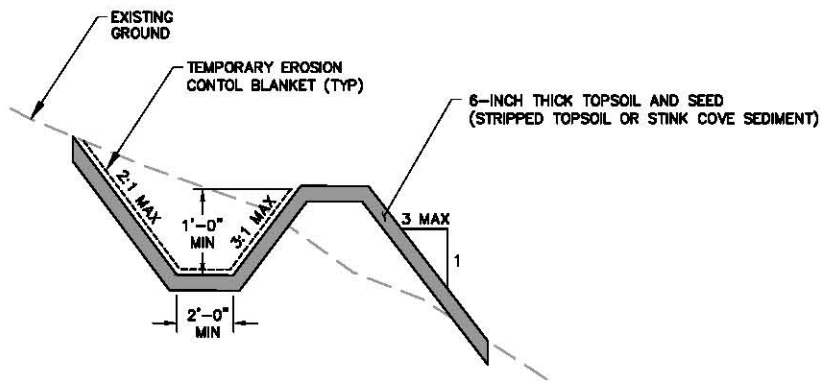

CONCEPTUAL DIVERSION SWALE
NTS

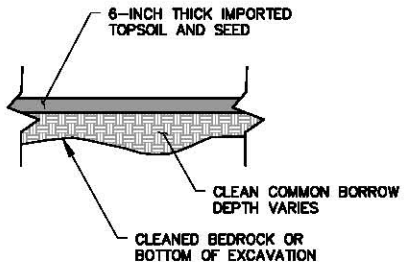

RESIDENTIAL VEGETATION RESTORATION DETAIL
NTS

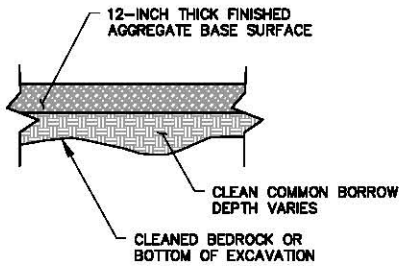

RESIDENTIAL GRAVEL RESTORATION DETAIL
NTS

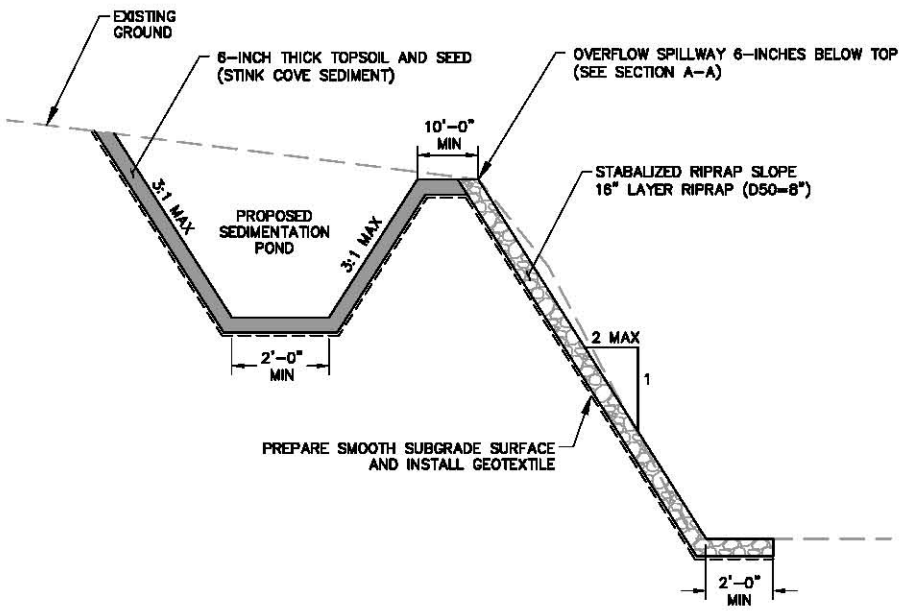

TYPICAL SECTION
NTS

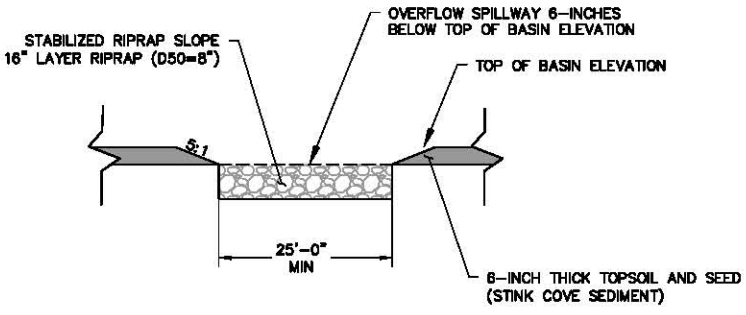

SECTION A-A
NTS

CONCEPTUAL SEDIMENTATION POND AND OVERFLOW OUTLET DETAIL
NTS

Prepared/Date: TDD 7-23-10
Checked/Date: MAP 7-23-10

NOT FOR CONSTRUCTION

OU1 DESIGN
CALLAHAN MINE SUPERFUND SITE
BROOKSVILLE, MAINE

MACTEC

FIGURE 5
CONCEPTUAL DRAINAGE AND STOCKPILE DETAILS

P:\Projects\CADD-PORT\Projects\Callahan Mine Site\OU1 Concept Design\OU1 Conceptual Design.dwg Thu, 23 Sep 2010 - 11:45am tddonovan

APPROXIMATE LOCATION EXISITING 48" CMP

EXISTING FLOW PATH TO BE MAINTAINED

EXISTING WETLAND WITH BERMED RETENTION

EXISTING FLOOD LIMIT (TYP)

NO MATERIAL TO BE PLACED IN THIS AREA

CONCEPTUAL DIVERSION SWALE (SEE NOTE 3)

EXISTING TAILINGS IMPOUNDMENT WETLAND LIMIT (SEE NOTE 2)

CONCEPTUAL ROADSIDE DITCH (SEE NOTE 3)

CONCEPTUAL 38,000 C.Y. STOCKPILE CONTOURS (SEE NOTE 1)

LIMIT OF CONCEPTUAL 4,000 C.Y. STOCKPILE (SEE INSERT THIS SHEET)

NO MATERIAL TO BE PLACED IN THIS AREA

CONCEPTUAL 12" CULVERT FROM PROPOSED ROADSIDE SWALE TO PLUNGE POOL OUTLET PROTECTION (SEE DETAIL ON FIGURE 8)

CONCEPTUAL 4,000 CY STOCKPILE

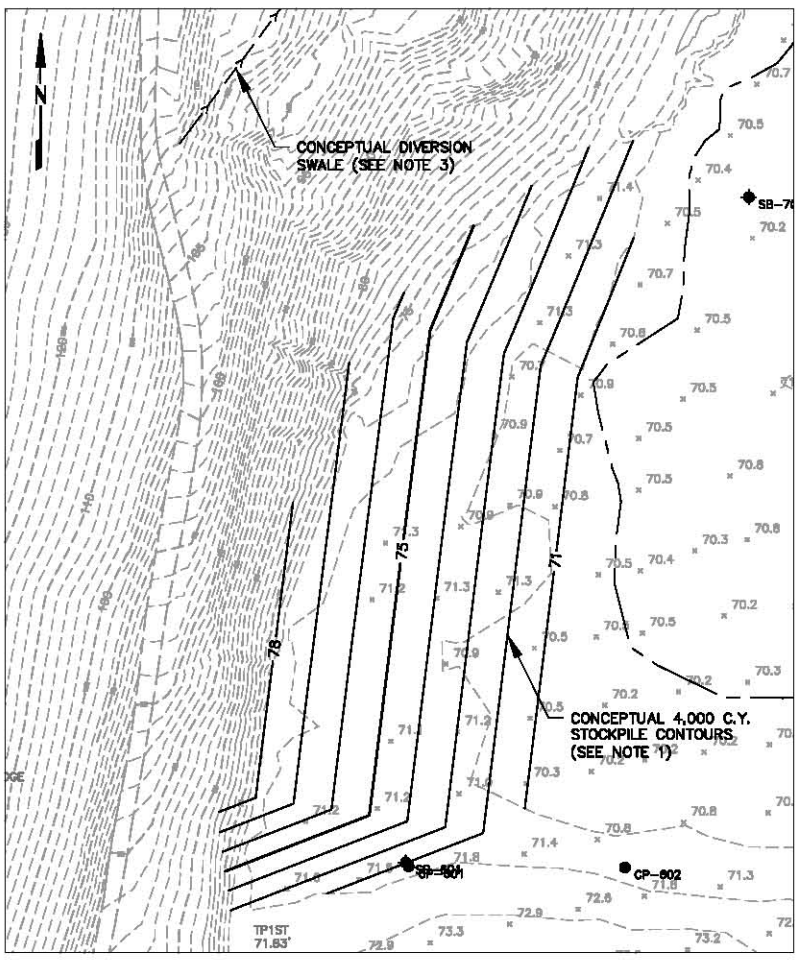

NOTES:

1. STOCKPILE CONTOURS REPRESENT CONCEPTUAL GRADING PROVIDING APPROXIMATELY 38,000 C.Y. OF STORAGE VOLUME. THE REQUIRED WORK COMPONENT FOR THIS PROJECT (RESIDENTIAL USE AREA) WILL GENERATE AN ESTIMATED EXCAVATION VOLUME OF 3,400 C.Y (SEE 4,000 C.Y INSERT). SHOULD CONTRACTOR BE REQUESTED TO COMPLETE ADDITIONAL WORK ITEMS (ORE PAD REMOVAL AND DRAINAGE IMPROVEMENTS – SEE FIGURE 4), EXCAVATION VOLUMES MAY EXCEED 30,000 C.Y. CONTRACTOR SHALL PREPARE AND SUBMIT A PROPOSED STOCKPILING PLAN TO ADEQUATELY ADDRESS MEANS AND METHODS BASED ON UNCERTAINTY IN VOLUMES.
2. STOCKPILE MATERIAL SHALL NOT ENCROACH INTO THE EXISTING WETLANDS DUE TO PRESENCE OF SOFT SOILS AND RELATED STABILITY ISSUES.
3. ROADSIDE DITCH AND DIVERSION SWALE CONSTRUCTION ARE TO BE EVALUATED AS PART OF THE IMPLEMENTATION PLAN. DITCH ALIGNMENTS SHOWN ARE CONCEPTUAL AND MAY BE FIELD ADJUSTED BY CONTRACTOR BASED ON EXISTING CONDITIONS AND TOPOGRAPHY.

Prepared/Date: TDD 7-21-10
Checked/Date: MAP 7-23-10

NOT FOR CONSTRUCTION

0 25 50 100
SCALE IN FEET

OU1 DESIGN
CALLAHAN MINE SUPERFUND SITE
BROOKSVILLE, MAINE

MACTEC

FIGURE 6
CONCEPTUAL TAILINGS IMPOUNDMENT
INTERIM STOCKPILE AND RUN-ON CONTROL

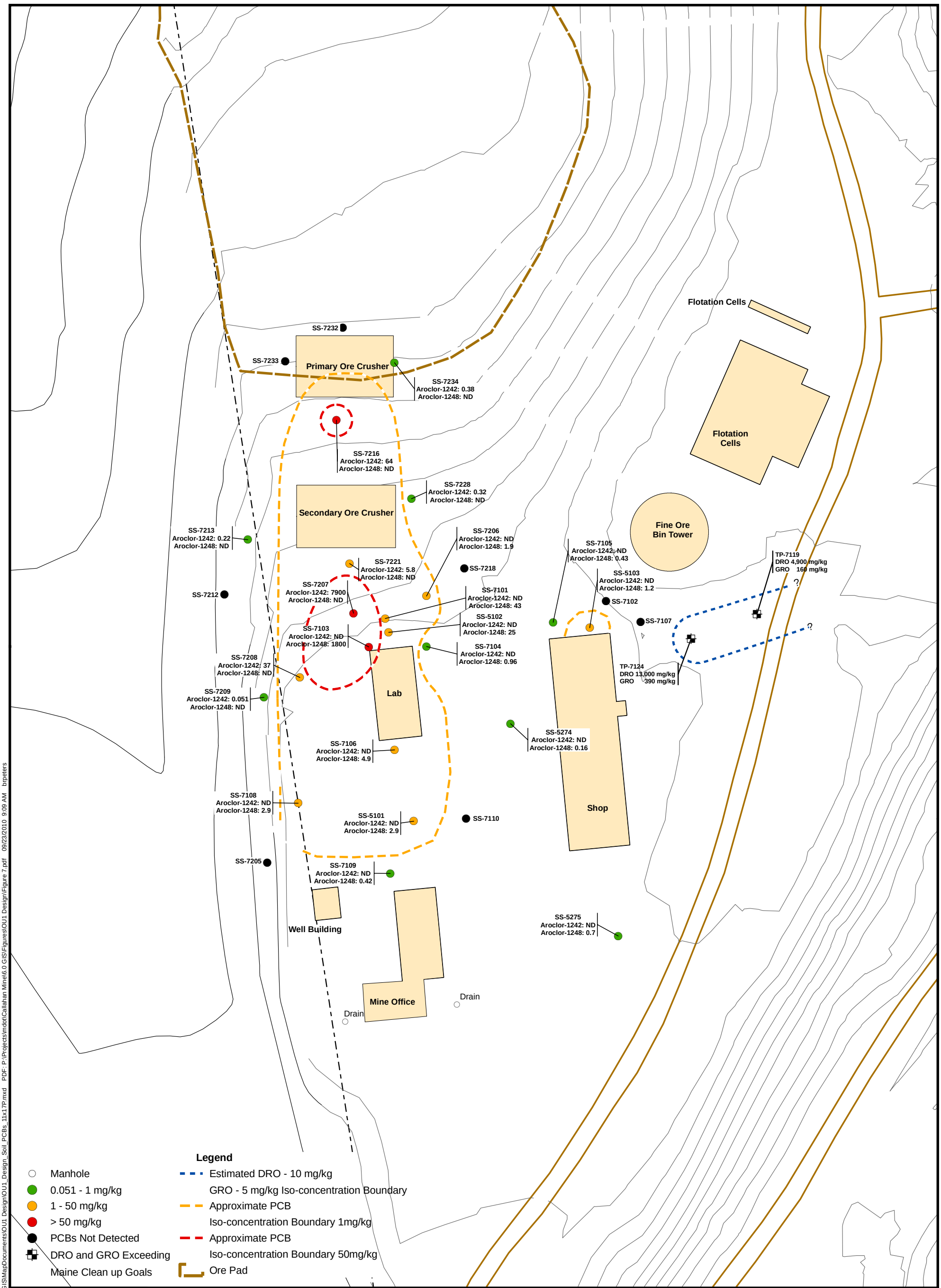

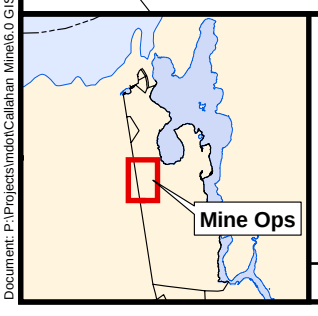

Figure 7
Areas Exceeding PCB PRGs and DRO/GRO Cleanup Goals

Prepared/Date: BRP 09/23/10 | Checked/Date: SWR 09/23/10

0 30 60 Feet

N

OU1 Design
Callahan Mine Superfund Site
Brooksville, Maine
MACTEC, Inc.

Document: P:\Projects\mdot\Callahan Mine\6.0 GIS\MapDocuments\OU1_Design\OU1_Design_Soil_PCBs_11x17P.mxd PDF: P:\Projects\mdot\Callahan Mine\6.0 GIS\Figures\OU1 Design\Figure 7.pdf 09/23/2010 9:09 AM brpeters

APPENDIX A

RI DATA FOR CONTAMINANTS OF CONCERN FOR RESIDENTIAL USE AREA AND MINE OPERATIONS AREA

Table 4.1-2
Summary of Ore Pad Surface Soil Sample Results

			Aoc Name	Ore Pad		Ore Pad		Ore Pad		Ore Pad		Ore Pad	
			Exposure Area	Exposure Area 9A		Exposure Area 9A		Exposure Area 9A		Exposure Area 9A		Exposure Area 9A	
			Field Sample Date	12/2/2004		12/2/2004		6/15/2006		6/15/2006		6/16/2006	
			Loc Name	SS-415		SS-414		SB-615		SB-615		SB-616	
			Sample ID	D05723		D05722		SB-615001XXXXD		SB-615001XXXXX		SB-616001XXXXX	
			Qc Code	FS		FS		FD		FS		FS	
Parameter	**Units**	**Human**	**Ecological**	Result		Result		Result		Result		Result	
VOCs (SW8260)													
1,2-Dichlorobenzene	MG/KG	17	20					-		-		-	
1,3-Dichlorobenzene	MG/KG	1.6	20					-		-		-	
2-Hexanone	MG/KG							-		-		-	
4-Methyl-2-pentanone	MG/KG	79						-		-		-	
Acetic acid, methyl ester	MG/KG	220						-		-		-	
Acetone	MG/KG	16	350					-		-		-	
Carbon disulfide	MG/KG	36						-		-		-	
Chlorodibromomethane	MG/KG							-		-		-	
Chloroform	MG/KG	0.36						-		-		-	
Dichlorodifluoromethane	MG/KG	9.4						0.015		0.012		-	
Methyl Tertbutyl Ether	MG/KG	62						-		-		-	
Methylene chloride	MG/KG	0.02						-		-		-	
Toluene	MG/KG	12	200					-		-		-	
Trichlorofluoromethane	MG/KG	39						0.001	J	-		-	
SVOCs (SW8270)													
Acetophenone	MG/KG		199					-		-		-	
Bis(2-Ethylhexyl)phthalate	MG/KG	35						-		-		-	
Butylbenzylphthalate	MG/KG	1,200						-		-		-	
Chrysene	MG/KG	62	18.8					-		-		-	
Di-n-butylphthalate	MG/KG	610	200					-		-		-	
Dimethylphthalate	MG/KG	100,000	200					-		-		-	
Fluoranthene	MG/KG	230	26.5					-		-		-	
Pyrene	MG/KG	230	32.3					-		-		-	
Metals (SW6010B)													
Aluminum	MG/KG	7,600	50	**40000**		**46000**							
Antimony	MG/KG	3.1	0.27	**4.1**	J	-							
Arsenic	MG/KG	0.39	18	**46**	J	**50**	J						
Barium	MG/KG	540	330	8.2	EB	6.5	EB						
Beryllium	MG/KG	15	10	0.3	J	0.12	J						
Cadmium	MG/KG	3.7	0.36	**24**	J	0.37	J						
Calcium	MG/KG			1500	J	30	J						
Chromium	MG/KG	21	0.4	11	JEB	1.5	JEB						
Cobalt	MG/KG	470	13	1.7	J	-							

Table 4.1-2
Summary of Ore Pad Surface Soil Sample Results

			Aoc Name	Ore Pad		Ore Pad		Ore Pad		Ore Pad		Ore Pad	
			Exposure Area	Exposure Area 9A		Exposure Area 9A		Exposure Area 9A		Exposure Area 9A		Exposure Area 9A	
			Field Sample Date	12/2/2004		12/2/2004		6/15/2006		6/15/2006		6/16/2006	
			Loc Name	SS-415		SS-414		SB-615		SB-615		SB-616	
			Sample ID	D05723		D05722		SB-615001XXXXD		SB-615001XXXXX		SB-616001XXXXX	
			Qc Code	FS		FS		FD		FS		FS	
Parameter	**Units**	**Human**	**Ecological**	Result		Result		Result		Result		Result	
Copper	MG/KG	310	28	**6600**	J	**14000**	J						
Iron	MG/KG	2,300	200	**42000**		**83000**							
Lead	MG/KG	400	11	**1600**	J	350	J						
Magnesium	MG/KG			77000	J	97000	J						
Manganese	MG/KG	180	100	**960**	J	**890**	J						
Mercury	MG/KG	2.3	0.1	1.5	J	0.14	J						
Nickel	MG/KG	160	30	6.8	JEB	0.2	JEB						
Potassium	MG/KG			2400	J	2700							
Selenium	MG/KG	39	0.52	10	J	24	J						
Silver	MG/KG	39	2	7	J	12	J						
Sodium	MG/KG			62	J	21	J						
Thallium	MG/KG	0.52	1	**1.3**	J	**1.3**	J						
Vanadium	MG/KG	55	2	15	J	16	J						
Zinc	MG/KG	2,300	49	**8800**	J	110	J						
Mercury	MG/KG	2.3	0.1										

Notes:
AOC - Area of Concern
Dash "-" represents analyte analyzed for and not detected
Blank cell = not analyzed
Qualifiers = J - estimated value

Prepared\Date: JKR 02/29/08
Checked\Date: SFC 03/28/08

Shaded cell = result greater than the USEPA Region IX PRGs

Table source: MACTEC 2009, Callahan Mine Superfund Site, Final RI Report

R- rejected result
EB - contamination in associated equipment blank

Table 4.1-3
Summary of Mine Operations Surface Soil Sample Results

			Aoc Name	Mine Ops Area		Mine Ops Area		Mine Ops Area		Mine Ops Area		Mine Ops Area		Mine Ops Area		Mine Ops Area	
			Exposure Area	Exposure Area 9A		Exposure Area 9A		Exposure Area 9A		Exposure Area 9A		Exposure Area 9A		Exposure Area 9A		Exposure Area 9A	
			Field Sample Date	12/4/2004		12/4/2004		12/4/2004		12/4/2004		12/4/2004		12/4/2004		9/8/2005	
			Loc Name	SS-410		SS-410		SS-411		SS-412		SS-413		SS-416		SS-5102	
			Sample ID	A19C8		D05718		D05719		D05720		D05721		D05724		SS-510200001XX	
			Qc Code	FS		FS		FS		FS		FS		FS		FS	
Parameter	**Units**	**Human**	**Ecological**	Result		Result		Result		Result		Result		Result		Result	
VOCs (SW8082)																	
1,2-Dichlorobenzene	MG/KG	17	20														
1,3-Dichlorobenzene	MG/KG	1.6	20														
2-Hexanone	MG/KG																
4-Methyl-2-pentanone	MG/KG	79															
Acetic acid, methyl ester	MG/KG	220															
Acetone	MG/KG	16	350														
Carbon disulfide	MG/KG	36															
Chlorodibromomethane	MG/KG																
Chloroform	MG/KG	0.36															
Dichlorodifluoromethane	MG/KG	9.4															
Methyl Tertbutyl Ether	MG/KG	62															
Methylene chloride	MG/KG	0.02															
Toluene	MG/KG	12	200														
Trichlorofluoromethane	MG/KG	39															
SVOCs (SW8270)																	
Acetophenone	MG/KG		199														
Bis(2-Ethylhexyl)phthalate	MG/KG	35															
Butylbenzylphthalate	MG/KG	1,200															
Chrysene	MG/KG	62	18.8														
Di-n-butylphthalate	MG/KG	610	200														
Dimethylphthalate	MG/KG	100,000	200														
Fluoranthene	MG/KG	230	26.5														
Pyrene	MG/KG	230	32.3														
PCBs (SW8082)																	
Aroclor, Total	MG/KG															36.4	
Aroclor-1242	MG/KG															-	
Aroclor-1248	MG/KG															**25**	
Metals (SW6010B)																	
Aluminum	MG/KG	7,600	50			**17000**		**16000**		**29000**		**22000**		**21000**			
Antimony	MG/KG	3.1	0.27			0.77	J	0.85	J	0.74	J	0.96	J	0.61	J		
Arsenic	MG/KG	0.39	18			**26**	J	**31**	J	**220**	J	**34**	J	**57**	J		
Barium	MG/KG	540	330			25	EB	30	EB	26	EB	26	EB	13	EB		
Beryllium	MG/KG	15	10			0.34	J	0.46	J	0.49	J	0.53	J	0.17	J		
Cadmium	MG/KG	3.7	0.36			**27**	J	**41**	J	**170**	J	**29**	J	2.7	J		
Calcium	MG/KG					11000	J	7800	J	2800	J	3600	J	440	J		
Chromium	MG/KG	21	0.4			**33**	J	**30**	J	**27**	J	**27**	J	**27**	J		
Cobalt	MG/KG	470	13			14	J	13	J	14	J	11	J	1.7	J		
Copper	MG/KG	310	28			**2300**	J	**5700**	J	**8700**	J	**3500**	J	**1200**	J		
Iron	MG/KG	2,300	200			**24000**		**34000**		**84000**		**29000**		**36000**			
Lead	MG/KG	400	11			**510**	J	**2300**	J	**1800**	J	**700**	J	**1000**	J		
Magnesium	MG/KG					22000	J	18000		49000		26000		36000			
Manganese	MG/KG	180	100			**1300**	J	**740**	J	**1800**	J	**870**	J	**530**	J		
Mercury	MG/KG	2.3	0.1			0.33		1.1		1.2		0.58		1.7			
Nickel	MG/KG	160	30			30	JEB	30	JEB	23	JEB	28	JEB	13	JEB		
Potassium	MG/KG					970		1400		2300		1800		1300			
Selenium	MG/KG	39	0.52			2	J	4.3	J	19	J	3.2	J	7.4	J		
Silver	MG/KG	39	2			2	J	3.5	J	5.5	J	4.8	J	3.9	J		
Sodium	MG/KG					60	JEB	56	JEB	63	JEB	93	JEB	51	JEB		
Thallium	MG/KG	0.52	1			0.49	J	**0.59**	J	**6.7**	J	**0.64**	J	**0.77**	J		
Vanadium	MG/KG	55	2			23	J	24	J	21	J	22	J	19	J		
Zinc	MG/KG	2,300	49			**5800**	J	**16000**	J	**63000**	J	**10000**	J	1200	J		

Table 4.1-3
Summary of Mine Operations Surface Soil Sample Results

			Aoc Name	Mine Ops Area		Mine Ops Area		Mine Ops Area		Mine Ops Area		Mine Ops Area		Mine Ops Area		Mine Ops Area		Mine Ops Area	
			Exposure Area	Exposure Area 9A		Exposure Area 9A		Exposure Area 9A		Exposure Area 9A		Exposure Area 9A		Exposure Area 9A		Exposure Area 9A		Exposure Area 9A	
			Field Sample Date	9/8/2005		9/8/2005		11/21/2005		11/21/2005		6/6/2006		6/6/2006		7/12/2007		7/12/2007	
			Loc Name	SS-5101		SS-5101		SS-5275		SS-5274		SB-613		SB-614		SS-7135		SS-7105	
			Sample ID	SS-510100001XD		SS-510100001XX		SS-527500001X2		SS-527400001X2		SB-613001XXXXX		SB-614000XXXXX		SS-713500001XX		SS-710500001XX	
			Qc Code	FD		FS		FS		FS		FS		FS		FS		FS	
Parameter	**Units**	**Human**	**Ecological**	Result		Result		Result		Result		Result		Result		Result		Result	
VOCs (SW8082)																			
1,2-Dichlorobenzene	MG/KG	17	20									-		-					
1,3-Dichlorobenzene	MG/KG	1.6	20									-		-					
2-Hexanone	MG/KG											-		-					
4-Methyl-2-pentanone	MG/KG	79										0.006	J	-					
Acetic acid, methyl ester	MG/KG	220										-		-					
Acetone	MG/KG	16	350									-		-					
Carbon disulfide	MG/KG	36										-		-					
Chlorodibromomethane	MG/KG											-		-					
Chloroform	MG/KG	0.36										-		-					
Dichlorodifluoromethane	MG/KG	9.4										-		-					
Methyl Tertbutyl Ether	MG/KG	62										-		-					
Methylene chloride	MG/KG	0.02										-		-					
Toluene	MG/KG	12	200									-		-					
Trichlorofluoromethane	MG/KG	39										-		-					
SVOCs (SW8270)																			
Acetophenone	MG/KG		199									-		-					
Bis(2-Ethylhexyl)phthalate	MG/KG	35										-		-					
Butylbenzylphthalate	MG/KG	1,200										-		-					
Chrysene	MG/KG	62	18.8									-		-					
Di-n-butylphthalate	MG/KG	610	200									-		-					
Dimethylphthalate	MG/KG	100,000	200									-		-					
Fluoranthene	MG/KG	230	26.5									-		-					
Pyrene	MG/KG	230	32.3									-		-					
PCBs (SW8082)																			
Aroclor, Total	MG/KG			2.108		3.452		0.814		0.268									
Aroclor-1242	MG/KG			-		-		-		-								-	
Aroclor-1248	MG/KG			**2**	J	**2.9**		**0.7**		**0.16**								**0.43**	
Metals (SW6010B)																			
Aluminum	MG/KG	7,600	50																
Antimony	MG/KG	3.1	0.27																
Arsenic	MG/KG	0.39	18																
Barium	MG/KG	540	330																
Beryllium	MG/KG	15	10																
Cadmium	MG/KG	3.7	0.36																
Calcium	MG/KG																		
Chromium	MG/KG	21	0.4																
Cobalt	MG/KG	470	13																
Copper	MG/KG	310	28																
Iron	MG/KG	2,300	200																
Lead	MG/KG	400	11																
Magnesium	MG/KG																		
Manganese	MG/KG	180	100																
Mercury	MG/KG	2.3	0.1																
Nickel	MG/KG	160	30																
Potassium	MG/KG																		
Selenium	MG/KG	39	0.52																
Silver	MG/KG	39	2																
Sodium	MG/KG																		
Thallium	MG/KG	0.52	1																
Vanadium	MG/KG	55	2																
Zinc	MG/KG	2,300	49																

Table 4.1-3
Summary of Mine Operations Surface Soil Sample Results

			Aoc Name	Mine Ops Area		Mine Ops Area		Mine Ops Area		Mine Ops Area		Mine Ops Area		Mine Ops Area		Mine Ops Area		Mine Ops Area	
			Exposure Area	Exposure Area 9A		Exposure Area 9A		Exposure Area 9A		Exposure Area 9A		Exposure Area 9A		Exposure Area 9A		Exposure Area 9A		Exposure Area 9A	
			Field Sample Date	7/12/2007		7/12/2007		7/12/2007		7/12/2007		7/12/2007		7/12/2007		7/12/2007		7/12/2007	
			Loc Name	SS-7102		SS-7107		SS-7106		SS-7108		SS-7109		SS-7110		SS-7110		SS-7103	
			Sample ID	SS-710200001XX		SS-710700001XX		SS-710600001XX		SS-710800001XX		SS-710900001XX		SS-711000001XD		SS-711000001XX		SS-710300001XX	
			Qc Code	FS		FS		FS		FS		FS		FD		FS		FS	
Parameter	**Units**	**Human**	**Ecological**	Result		Result		Result		Result		Result		Result		Result		Result	
VOCs (SW8082)																			
1,2-Dichlorobenzene	MG/KG	17	20																
1,3-Dichlorobenzene	MG/KG	1.6	20																
2-Hexanone	MG/KG																		
4-Methyl-2-pentanone	MG/KG	79																	
Acetic acid, methyl ester	MG/KG	220																	
Acetone	MG/KG	16	350																
Carbon disulfide	MG/KG	36																	
Chlorodibromomethane	MG/KG																		
Chloroform	MG/KG	0.36																	
Dichlorodifluoromethane	MG/KG	9.4																	
Methyl Tertbutyl Ether	MG/KG	62																	
Methylene chloride	MG/KG	0.02																	
Toluene	MG/KG	12	200																
Trichlorofluoromethane	MG/KG	39																	
SVOCs (SW8270)																			
Acetophenone	MG/KG		199																
Bis(2-Ethylhexyl)phthalate	MG/KG	35																	
Butylbenzylphthalate	MG/KG	1,200																	
Chrysene	MG/KG	62	18.8																
Di-n-butylphthalate	MG/KG	610	200																
Dimethylphthalate	MG/KG	100,000	200																
Fluoranthene	MG/KG	230	26.5																
Pyrene	MG/KG	230	32.3																
PCBs (SW8082)																			
Aroclor, Total	MG/KG																		
Aroclor-1242	MG/KG			-		-		-		-		-		-		-		-	
Aroclor-1248	MG/KG			-		-		**4.9**		**2.9**		**0.42**		-		-		**1800**	
Metals (SW6010B)																			
Aluminum	MG/KG	7,600	50																
Antimony	MG/KG	3.1	0.27																
Arsenic	MG/KG	0.39	18																
Barium	MG/KG	540	330																
Beryllium	MG/KG	15	10																
Cadmium	MG/KG	3.7	0.36																
Calcium	MG/KG																		
Chromium	MG/KG	21	0.4																
Cobalt	MG/KG	470	13																
Copper	MG/KG	310	28																
Iron	MG/KG	2,300	200																
Lead	MG/KG	400	11																
Magnesium	MG/KG																		
Manganese	MG/KG	180	100																
Mercury	MG/KG	2.3	0.1																
Nickel	MG/KG	160	30																
Potassium	MG/KG																		
Selenium	MG/KG	39	0.52																
Silver	MG/KG	39	2																
Sodium	MG/KG																		
Thallium	MG/KG	0.52	1																
Vanadium	MG/KG	55	2																
Zinc	MG/KG	2,300	49																

Table 4.1-3
Summary of Mine Operations Surface Soil Sample Results

			Aoc Name	Mine Ops Area		Mine Ops Area		Mine Ops Area		Mine Ops Area		Mine Ops Area		Mine Ops Area		Mine Ops Area	
			Exposure Area	Exposure Area 9A		Exposure Area 9A		Exposure Area 9A		Exposure Area 9A		Exposure Area 9A		Exposure Area 9A		Exposure Area 9A	
			Field Sample Date	7/12/2007		7/12/2007		7/26/2007		7/26/2007		7/26/2007		7/26/2007		8/14/2007	
			Loc Name	SS-7101		SS-7104		SS-7190		SS-7191		SS-7192		SS-7193		SS-7205	
			Sample ID	SS-710100001XX		SS-710400001XX		SS-719000001XX		SS-719100001XX		SS-719200001XX		SS-719300001XX		SS-720500001XX	
			Qc Code	FS		FS		FS		FS		FS		FS		FS	
Parameter	**Units**	**Human**	**Ecological**	Result		Result		Result		Result		Result		Result		Result	
VOCs (SW8082)																	
1,2-Dichlorobenzene	MG/KG	17	20														
1,3-Dichlorobenzene	MG/KG	1.6	20														
2-Hexanone	MG/KG																
4-Methyl-2-pentanone	MG/KG	79															
Acetic acid, methyl ester	MG/KG	220															
Acetone	MG/KG	16	350														
Carbon disulfide	MG/KG	36															
Chlorodibromomethane	MG/KG																
Chloroform	MG/KG	0.36															
Dichlorodifluoromethane	MG/KG	9.4															
Methyl Tertbutyl Ether	MG/KG	62															
Methylene chloride	MG/KG	0.02															
Toluene	MG/KG	12	200														
Trichlorofluoromethane	MG/KG	39															
SVOCs (SW8270)																	
Acetophenone	MG/KG		199														
Bis(2-Ethylhexyl)phthalate	MG/KG	35															
Butylbenzylphthalate	MG/KG	1,200															
Chrysene	MG/KG	62	18.8														
Di-n-butylphthalate	MG/KG	610	200														
Dimethylphthalate	MG/KG	100,000	200														
Fluoranthene	MG/KG	230	26.5														
Pyrene	MG/KG	230	32.3														
PCBs (SW8082)																	
Aroclor, Total	MG/KG																
Aroclor-1242	MG/KG			-		-		-		-		-		-		-	
Aroclor-1248	MG/KG			**43**		**0.96**		-		-		-		-		-	
Metals (SW6010B)																	
Aluminum	MG/KG	7,600	50														
Antimony	MG/KG	3.1	0.27														
Arsenic	MG/KG	0.39	18														
Barium	MG/KG	540	330														
Beryllium	MG/KG	15	10														
Cadmium	MG/KG	3.7	0.36														
Calcium	MG/KG																
Chromium	MG/KG	21	0.4														
Cobalt	MG/KG	470	13														
Copper	MG/KG	310	28														
Iron	MG/KG	2,300	200														
Lead	MG/KG	400	11														
Magnesium	MG/KG																
Manganese	MG/KG	180	100														
Mercury	MG/KG	2.3	0.1														
Nickel	MG/KG	160	30														
Potassium	MG/KG																
Selenium	MG/KG	39	0.52														
Silver	MG/KG	39	2														
Sodium	MG/KG																
Thallium	MG/KG	0.52	1														
Vanadium	MG/KG	55	2														
Zinc	MG/KG	2,300	49														

Table 4.1-3
Summary of Mine Operations Surface Soil Sample Results

			Aoc Name	Mine Ops Area		Mine Ops Area		Mine Ops Area		Mine Ops Area		Mine Ops Area		Mine Ops Area		Mine Ops Area	
			Exposure Area	Exposure Area 9A		Exposure Area 9A		Exposure Area 9A		Exposure Area 9A		Exposure Area 9A		Exposure Area 9A		Exposure Area 9A	
			Field Sample Date	8/14/2007		8/14/2007		8/14/2007		8/14/2007		10/2/2007		10/2/2007		10/2/2007	
			Loc Name	SS-7206		SS-7207		SS-7208		SS-7103		SS-7209		SS-7212		SS-7213	
			Sample ID	SS-720600001XX		SS-720700001XX		SS-720800001XX		SS-710301001XX		SS-720900001XX		SS-721200001XX		SS-721300001XX	
			Qc Code	FS		FS		FS		FS		FS		FS		FS	
Parameter	**Units**	**Human**	**Ecological**	Result		Result		Result		Result		Result		Result		Result	
VOCs (SW8082)																	
1,2-Dichlorobenzene	MG/KG	17	20														
1,3-Dichlorobenzene	MG/KG	1.6	20														
2-Hexanone	MG/KG																
4-Methyl-2-pentanone	MG/KG	79															
Acetic acid, methyl ester	MG/KG	220															
Acetone	MG/KG	16	350														
Carbon disulfide	MG/KG	36															
Chlorodibromomethane	MG/KG																
Chloroform	MG/KG	0.36															
Dichlorodifluoromethane	MG/KG	9.4															
Methyl Tertbutyl Ether	MG/KG	62															
Methylene chloride	MG/KG	0.02															
Toluene	MG/KG	12	200														
Trichlorofluoromethane	MG/KG	39															
SVOCs (SW8270)																	
Acetophenone	MG/KG		199														
Bis(2-Ethylhexyl)phthalate	MG/KG	35															
Butylbenzylphthalate	MG/KG	1,200															
Chrysene	MG/KG	62	18.8														
Di-n-butylphthalate	MG/KG	610	200														
Dimethylphthalate	MG/KG	100,000	200														
Fluoranthene	MG/KG	230	26.5														
Pyrene	MG/KG	230	32.3														
PCBs (SW8082)																	
Aroclor, Total	MG/KG																
Aroclor-1242	MG/KG			-		**7900**		**37**		**300**		**0.051**	J	-		**0.22**	J
Aroclor-1248	MG/KG			**1.9**		-		-		-		-		-		-	
Metals (SW6010B)																	
Aluminum	MG/KG	7,600	50														
Antimony	MG/KG	3.1	0.27														
Arsenic	MG/KG	0.39	18														
Barium	MG/KG	540	330														
Beryllium	MG/KG	15	10														
Cadmium	MG/KG	3.7	0.36														
Calcium	MG/KG																
Chromium	MG/KG	21	0.4														
Cobalt	MG/KG	470	13														
Copper	MG/KG	310	28														
Iron	MG/KG	2,300	200														
Lead	MG/KG	400	11														
Magnesium	MG/KG																
Manganese	MG/KG	180	100														
Mercury	MG/KG	2.3	0.1														
Nickel	MG/KG	160	30														
Potassium	MG/KG																
Selenium	MG/KG	39	0.52														
Silver	MG/KG	39	2														
Sodium	MG/KG																
Thallium	MG/KG	0.52	1														
Vanadium	MG/KG	55	2														
Zinc	MG/KG	2,300	49														

Table 4.1-3
Summary of Mine Operations Surface Soil Sample Results

			Aoc Name	Mine Ops Area		Mine Ops Area		Mine Ops Area		Mine Ops Area		Mine Ops Area		Mine Ops Area		Mine Ops Area	
			Exposure Area	Exposure Area 9A		Exposure Area 9A		Exposure Area 9A		Exposure Area 9A		Exposure Area 9A		Exposure Area 9A		Exposure Area 9A	
			Field Sample Date	10/2/2007		10/2/2007		10/2/2007		10/2/2007		11/7/2007		11/7/2007		11/7/2007	
			Loc Name	SS-7216		SS-7218		SS-7221		SS-7228		SS-7232		SS-7233		SS-7234	
			Sample ID	SS-721600001XX		SS-721800001XX		SS-722100001XX		SS-722800001XX		SS-723200001XX		SS-723300001XX		SS-723400001XX	
			Qc Code	FS		FS		FS		FS		FS		FS		FS	
Parameter	**Units**	**Human**	**Ecological**	Result		Result		Result		Result		Result		Result		Result	
VOCs (SW8082)																	
1,2-Dichlorobenzene	MG/KG	17	20														
1,3-Dichlorobenzene	MG/KG	1.6	20														
2-Hexanone	MG/KG																
4-Methyl-2-pentanone	MG/KG	79															
Acetic acid, methyl ester	MG/KG	220															
Acetone	MG/KG	16	350														
Carbon disulfide	MG/KG	36															
Chlorodibromomethane	MG/KG																
Chloroform	MG/KG	0.36															
Dichlorodifluoromethane	MG/KG	9.4															
Methyl Tertbutyl Ether	MG/KG	62															
Methylene chloride	MG/KG	0.02															
Toluene	MG/KG	12	200														
Trichlorofluoromethane	MG/KG	39															
SVOCs (SW8270)																	
Acetophenone	MG/KG		199														
Bis(2-Ethylhexyl)phthalate	MG/KG	35															
Butylbenzylphthalate	MG/KG	1,200															
Chrysene	MG/KG	62	18.8														
Di-n-butylphthalate	MG/KG	610	200														
Dimethylphthalate	MG/KG	100,000	200														
Fluoranthene	MG/KG	230	26.5														
Pyrene	MG/KG	230	32.3														
PCBs (SW8082)																	
Aroclor, Total	MG/KG																
Aroclor-1242	MG/KG			**64**	J	-		**5.8**	J	**0.32**	J	-		-		**0.38**	
Aroclor-1248	MG/KG			-		-		-		-		-		-		-	
Metals (SW6010B)																	
Aluminum	MG/KG	7,600	50														
Antimony	MG/KG	3.1	0.27														
Arsenic	MG/KG	0.39	18														
Barium	MG/KG	540	330														
Beryllium	MG/KG	15	10														
Cadmium	MG/KG	3.7	0.36														
Calcium	MG/KG																
Chromium	MG/KG	21	0.4														
Cobalt	MG/KG	470	13														
Copper	MG/KG	310	28														
Iron	MG/KG	2,300	200														
Lead	MG/KG	400	11														
Magnesium	MG/KG																
Manganese	MG/KG	180	100														
Mercury	MG/KG	2.3	0.1														
Nickel	MG/KG	160	30														
Potassium	MG/KG																
Selenium	MG/KG	39	0.52														
Silver	MG/KG	39	2														
Sodium	MG/KG																
Thallium	MG/KG	0.52	1														
Vanadium	MG/KG	55	2														
Zinc	MG/KG	2,300	49														

Notes:
AOC - Area of Concern
Dash "-" represents analyte analyzed for and not detected
Blank cell = not analyzed

Qualifiers = J - estimated value

Shaded cell = result greater than the USEPA Region IX PRGs

R- rejected result
EB - contamination in associated equipment blank

Prepared\Date: JKR 02/29/08
Checked\Date: SFC 03/28/08

Table source: MACTEC 2009, Callahan Mine Superfund Site, Final RI Report

Table 4.2-8
Summary of Volatile and Semi-volatile Compounds (Includes Diesel Range and Gasoline Range Organics) in Soil and Waste Rock

			AOC Name	Ore Pad		Ore Pad		Ore Pad		Ore Pad		Mine Ops Area		Mine Ops Area	
			Location	SB-615		SB-615		SB-615		SB-616		SB-613		SB-613	
			Sample ID	SB-615001XXXXD		SB-615001XXXXX		SB-615006XXXXX		SB-616001XXXXX		SB-613001XXXXX		SB-613010XXXXX	
			Sample Date	6/15/2006		6/15/2006		6/15/2006		6/16/2006		6/6/2006		6/6/2006	
			Fraction	Total		Total		Total		Total		Total		Total	
			Top Depth	1		1		6		1		1		10	
			Bottom Depth	2		2		7		2		2		11	
			QC Code	FD		FS		FS		FS		FS		FS	
Parameter	**RES**	**GW**	**Units**	Result	Qualifier	Result	Qualifier	Result	Qualifier	Result	Qualifier	Result	Qualifier	Result	Qualifier
VOCs															
2-Hexanone	NA	NA	MG/KG	-		-		-		-		-		-	
4-Methyl-2-pentanone	790	NA	MG/KG	-		-		-		-		0.006	J	-	
Acetic acid, methyl ester	22,000	NA	MG/KG	-		-		-		-		-		-	
Acetone	1,600	NA	MG/KG	-		-		-		-		-		-	
Carbon disulfide	360	NA	MG/KG	-		-		-		-		-		-	
Chlorodibromomethane	1.1	NA	MG/KG	-		-		-		-		-		-	
Chloroform	3.6	NA	MG/KG	-		-		-		-		-		-	
Dichlorodifluoromethane	94	NA	MG/KG	0.015		0.012		0.039	J	-		-		-	
Methyl Tertbutyl Ether	62	NA	MG/KG	-		-		-		-		-		-	
Methylene chloride	9.1	28	MG/KG	-		-		-		-		-		-	
Toluene	520	12	MG/KG	-		-		-		-		-		0.005	J
Trichlorofluoromethane	390	NA	MG/KG	0.001	J	-		-		-		-		-	
SVOCs															
All Target Compounds	NA	NA	MG/KG	-		-				-		-			
DRO/GRO															
Diesel Range Organics	NA	NA	MG/KG												
Gasoline Range Organics	NA	NA	MG/KG												

Table 4.2-8
Summary of Volatile and Semi-volatile Compounds (Includes Diesel Range and Gasoline Range Organics) in Soil and Waste Rock

			AOC Name	Mine Ops Area		Mine Ops Area		Mine Ops Area		Mine Ops Area		WRP-1		WRP-1	
			Location	TP-7119		TP-7124		SB-614		SB-614		SB-606		SB-606	
			Sample ID	TP-711909001XX		TP-712403001XX		SB-614000XXXXX		SB-614002XXXXX		SB-606004XXXXX		SB-606009XXXXX	
			Sample Date	7/18/2007		7/18/2007		6/6/2006		6/8/2006		6/19/2006		6/19/2006	
			Fraction	Total		Total		Total		Total		Total		Total	
			Top Depth	9		3		0		2		4		9	
			Bottom Depth	10		4		1		3		6		10	
			QC Code	FS		FS		FS		FS		FS		FS	
Parameter	**RES**	**GW**	**Units**	Result	Qualifier	Result	Qualifier	Result	Qualifier	Result	Qualifier	Result	Qualifier	Result	Qualifier
VOCs															
2-Hexanone	NA	NA	MG/KG					-		-		-		-	
4-Methyl-2-pentanone	790	NA	MG/KG					-		0.005	J	-		-	
Acetic acid, methyl ester	22,000	NA	MG/KG					-		-		-		-	
Acetone	1,600	NA	MG/KG					-		-		-		-	
Carbon disulfide	360	NA	MG/KG					-		-		-		0.007	
Chlorodibromomethane	1.1	NA	MG/KG					-		-		-		-	
Chloroform	3.6	NA	MG/KG					-		-		0.0008	J	-	
Dichlorodifluoromethane	94	NA	MG/KG					-		-		-		-	
Methyl Tertbutyl Ether	62	NA	MG/KG					-		-		-		-	
Methylene chloride	9.1	28	MG/KG					-		-		-		-	
Toluene	520	12	MG/KG					-		-		-		-	
Trichlorofluoromethane	390	NA	MG/KG					-		-		-		-	
SVOCs															
All Target Compounds	NA	NA	MG/KG					-						-	
DRO/GRO															
Diesel Range Organics	NA	NA	MG/KG	4900		13000									
Gasoline Range Organics	NA	NA	MG/KG	160		390									

Table 4.2-8
Summary of Volatile and Semi-volatile Compounds (Includes Diesel Range and Gasoline Range Organics) in Soil and Waste Rock

			AOC Name	WRP-1		WRP-1		WRP-1		WRP-1		WRP-1		WRP-1	
			Location	SB-606		SB-607		SB-607		SB-608		SB-609		SB-619	
			Sample ID	SB-606020XXXXX		SB-607001XXXXX		SB-607004XXXXX		SB-608006XXXXX		SB-609000XXXXX		SB-619001XXXX	
			Sample Date	6/19/2006		6/13/2006		6/13/2006		6/12/2006		6/9/2006		6/27/2006	
			Fraction	Total		Total		Total		Total		Total		Total	
			Top Depth	20		1		4		6		0		1	
			Bottom Depth	22		2		6		7		2		2	
			QC Code	FS		FS		FS		FS		FS		FS	
Parameter	**RES**	**GW**	**Units**	Result	Qualifier	Result	Qualifier	Result	Qualifier	Result	Qualifier	Result	Qualifier	Result	Qualifier
VOCs															
2-Hexanone	NA	NA	MG/KG	-		-		-		-		-		-	
4-Methyl-2-pentanone	790	NA	MG/KG	-		-		-		-		-		-	
Acetic acid, methyl ester	22,000	NA	MG/KG	-		-		-		-		-		-	
Acetone	1,600	NA	MG/KG	-		-		-		-		-		-	
Carbon disulfide	360	NA	MG/KG	-		-		-		-		-		0.001	J
Chlorodibromomethane	1.1	NA	MG/KG	-		-		-		-		-		-	
Chloroform	3.6	NA	MG/KG	-		-		-		-		-		-	
Dichlorodifluoromethane	94	NA	MG/KG	-		0.086	J	0.12	J	0.093	J	0.054		0.018	
Methyl Tertbutyl Ether	62	NA	MG/KG	-		-		-		-		-		-	
Methylene chloride	9.1	28	MG/KG	-		0.006	J	-		-		-		-	
Toluene	520	12	MG/KG	-		-		-		-		-		-	
Trichlorofluoromethane	390	NA	MG/KG	0.003	J	0.004	J	-		-		-		-	
SVOCs															
All Target Compounds	NA	NA	MG/KG			-				-		-		-	
DRO/GRO															
Diesel Range Organics	NA	NA	MG/KG												
Gasoline Range Organics	NA	NA	MG/KG												

Table 4.2-8
Summary of Volatile and Semi-volatile Compounds (Includes Diesel Range and Gasoline Range Organics) in Soil and Waste Rock

			AOC Name	WRP-1		WRP-1		WRP-1		WRP-2		WRP-2		WRP-3	
			Location	SB-619		SB-619		SB-620		SB-611		SB-617		SB-612	
			Sample ID	SB-619001XXXXD		SB-619007XXXX		SB-620018XXXXX		SB-611002XXXXX		SB-617002XXXXX		SB-612001XXXXX	
			Sample Date	6/27/2006		6/27/2006		6/27/2006		6/16/2006		6/16/2006		6/14/2006	
			Fraction	Total		Total		Total		Total		Total		Total	
			Top Depth	1		7		18		2		2		1	
			Bottom Depth	2		8		19		3		3		2	
			QC Code	FD		FS		FS		FS		FS		FS	
Parameter	**RES**	**GW**	**Units**	Result	Qualifier	Result	Qualifier	Result	Qualifier	Result	Qualifier	Result	Qualifier	Result	Qualifier
VOCs															
2-Hexanone	NA	NA	MG/KG	-		-		-		-		-		-	
4-Methyl-2-pentanone	790	NA	MG/KG	-		-		-		-		-		-	
Acetic acid, methyl ester	22,000	NA	MG/KG	-		-		-		-		-		-	
Acetone	1,600	NA	MG/KG	-		-		-		-		-		-	
Carbon disulfide	360	NA	MG/KG	0.0007	J	0.004	J	0.022		-		-		-	
Chlorodibromomethane	1.1	NA	MG/KG	-		-		-		-		-		-	
Chloroform	3.6	NA	MG/KG	-		-		-		-		-		-	
Dichlorodifluoromethane	94	NA	MG/KG	0.009		0.015		0.28	J	0.074		-		0.14	J
Methyl Tertbutyl Ether	62	NA	MG/KG	-		-		-		-		-		-	
Methylene chloride	9.1	28	MG/KG	-		-		-		-		-		-	
Toluene	520	12	MG/KG	-		-		-		-		-		-	
Trichlorofluoromethane	390	NA	MG/KG	-		-		-		-		-		-	
SVOCs															
All Target Compounds	NA	NA	MG/KG					-		-		-		-	
DRO/GRO															
Diesel Range Organics	NA	NA	MG/KG												
Gasoline Range Organics	NA	NA	MG/KG												

Table 4.2-8
Summary of Volatile and Semi-volatile Compounds (Includes Diesel Range and Gasoline Range Organics) in Soil and Waste Rock

			AOC Name	WRP-3		Tailings Pile		Tailings Pile		Tailings Pile		Tailings Pile		Tailings Pile	
			Location	SB-612		MW-604R		MW-604R		MW-604R		MW-604R		MW-604R	
			Sample ID	SB-612008XXXXX		MW-604R001XXXX		MW-604R005XXXD		MW-604R005XXXX		MW-604R025XXXX		MW-604R056XXXX	
			Sample Date	6/14/2006		6/23/2006		6/27/2006		6/23/2006		6/23/2006		6/27/2006	
			Fraction	Total		Total		Total		Total		Total		Total	
			Top Depth	8		1		5		5		25		56	
			Bottom Depth	9		2		6		6		26		57	
			QC Code	FS		FS		FD		FS		FS		FS	
Parameter	**RES**	**GW**	**Units**	Result	Qualifier	Result	Qualifier	Result	Qualifier	Result	Qualifier	Result	Qualifier	Result	Qualifier
VOCs															
2-Hexanone	NA	NA	MG/KG	-		-		-		-		-		-	
4-Methyl-2-pentanone	790	NA	MG/KG	-		-		-		-		-		-	
Acetic acid, methyl ester	22,000	NA	MG/KG	-		-		-		-		-		-	
Acetone	1,600	NA	MG/KG	-		-		-		-		-		-	
Carbon disulfide	360	NA	MG/KG	-		-		0.016	J	0.007	J	0.01		0.035	
Chlorodibromomethane	1.1	NA	MG/KG	-		-		-		-		-		-	
Chloroform	3.6	NA	MG/KG	-		-		-		-		-		-	
Dichlorodifluoromethane	94	NA	MG/KG	0.054	J	0.006		0.014		0.009		0.053		0.15	
Methyl Tertbutyl Ether	62	NA	MG/KG	-		-		-		-		-		-	
Methylene chloride	9.1	28	MG/KG	-		-		-		-		-		-	
Toluene	520	12	MG/KG	-		-		-		-		-		-	
Trichlorofluoromethane	390	NA	MG/KG	-		-		-		-		-		-	
SVOCs															
All Target Compounds	NA	NA	MG/KG							-				-	
DRO/GRO															
Diesel Range Organics	NA	NA	MG/KG												
Gasoline Range Organics	NA	NA	MG/KG												

Table 4.2-8
Summary of Volatile and Semi-volatile Compounds (Includes Diesel Range and Gasoline Range Organics) in Soil and Waste Rock

			AOC Name	Tailings Pile		Tailings Pile		Tailings Pile		Tailings Pile		Tailings Pile		Tailings Pile	
			Location	SB-601		SB-601		SB-601		SB-602		SB-602		SB-602	
			Sample ID	SB-601002XXXXX		SB-601004XXXXX		SB-601010XXXXX		SB-602002XXXXX		SB-602006XXXXX		SB-602038XXXXX	
			Sample Date	7/10/2006		7/10/2006		7/10/2006		7/6/2006		7/6/2006		7/7/2006	
			Fraction	Total		Total		Total		Total		Total		Total	
			Top Depth	2		4		10		2		6		38	
			Bottom Depth	4		6		12		4		8		40	
			QC Code	FS		FS		FS		FS		FS		FS	
Parameter	**RES**	**GW**	**Units**	Result	Qualifier	Result	Qualifier	Result	Qualifier	Result	Qualifier	Result	Qualifier	Result	Qualifier
VOCs															
2-Hexanone	NA	NA	MG/KG	-		-		-		-		-		0.031	
4-Methyl-2-pentanone	790	NA	MG/KG	0.012	J	-		-		-		-		0.058	
Acetic acid, methyl ester	22,000	NA	MG/KG	0.008		-		-		-		-		-	
Acetone	1,600	NA	MG/KG	-		-		-		-		-		0.12	J
Carbon disulfide	360	NA	MG/KG	0.026		0.014		0.01		0.01		0.018		0.015	
Chlorodibromomethane	1.1	NA	MG/KG	-		-		-		0.002	J	-		-	
Chloroform	3.6	NA	MG/KG	-		-		-		-		-		-	
Dichlorodifluoromethane	94	NA	MG/KG	0.033		0.037		0.076		0.045		0.11		0.032	
Methyl Tertbutyl Ether	62	NA	MG/KG	-		0.008		0.008		-		-		-	
Methylene chloride	9.1	28	MG/KG	-		-		-		-		-		-	
Toluene	520	12	MG/KG	-		-		-		-		-		-	
Trichlorofluoromethane	390	NA	MG/KG	-		-		0.001	J	-		0.001	J	-	
SVOCs															
All Target Compounds	NA	NA	MG/KG	-						-					
DRO/GRO															
Diesel Range Organics	NA	NA	MG/KG												
Gasoline Range Organics	NA	NA	MG/KG												

Table 4.2-8
Summary of Volatile and Semi-volatile Compounds (Includes Diesel Range and Gasoline Range Organics) in Soil and Waste Rock

			AOC Name	Tailings Pile		Tailings Pile		Tailings Pile		Tailings Pile		Tailings Pile		Tailings Pile	
			Location	SB-603		SB-603		SB-603		SB-605A		SB-605A		SB-605B	
			Sample ID	SB-603003XXXXX		SB-603008XXXXX		SB-603016XXXXX		SB-605002XXXXX		SB-605006XXXXX		SB-605B024XXXX	
			Sample Date	7/11/2006		7/11/2006		7/11/2006		7/12/2006		7/12/2006		7/12/2006	
			Fraction	Total		Total		Total		Total		Total		Total	
			Top Depth	3		8		16		2		6		24	
			Bottom Depth	4		10		18		4		8		26	
			QC Code	FS		FS		FS		FS		FS		FS	
Parameter	**RES**	**GW**	**Units**	Result	Qualifier	Result	Qualifier	Result	Qualifier	Result	Qualifier	Result	Qualifier	Result	Qualifier
VOCs															
2-Hexanone	NA	NA	MG/KG	-		-		-		-		-		-	
4-Methyl-2-pentanone	790	NA	MG/KG	-		-		-		-		-		-	
Acetic acid, methyl ester	22,000	NA	MG/KG	-		-		-		-		-		-	
Acetone	1,600	NA	MG/KG	-		-		-		-		-		-	
Carbon disulfide	360	NA	MG/KG	0.03		0.014		0.016		0.019		0.024		0.038	
Chlorodibromomethane	1.1	NA	MG/KG	-		-		-		-		-		-	
Chloroform	3.6	NA	MG/KG	-		-		-		-		-		-	
Dichlorodifluoromethane	94	NA	MG/KG	0.17		0.068		0.11		0.28		0.12		0.057	
Methyl Tertbutyl Ether	62	NA	MG/KG	-		-		-		-		-		-	
Methylene chloride	9.1	28	MG/KG	-		-		-		-		-		-	
Toluene	520	12	MG/KG	-		-		-		-		-		-	
Trichlorofluoromethane	390	NA	MG/KG	-		-		-		-		-		-	
SVOCs															
All Target Compounds	NA	NA	MG/KG			-						-			
DRO/GRO															
Diesel Range Organics	NA	NA	MG/KG												
Gasoline Range Organics	NA	NA	MG/KG												

Notes:

RES - Region 9 Residential Surface Soil, or MEDEP Remedial Action Guideline (RAG).
GW - MEDEP Groundwater RAGs.
Dash "-" represents analyte analyzed for and not detected
Blank cell = not analyzed
Qualifiers = J - estimated value
Shaded cell = greater than lower of RES and GW

Prepared/Date: SFC 03/29/07
Checked/Date: JKR 07/05/07

Table source: MACTEC 2009, Callahan Mine Superfund Site, Final RI Report

Table 4.1-11
Summary of Residential Area Surface Soil Sample Results

			Aoc Name	Halo		Halo	
			Exposure Area	Residential Soil		Residential Soil	
			Field Sample Date	8/1/2007		8/1/2007	
			Loc Name	SS-7243H		SS-7244H	
			Sample ID	SS-7243H0001XX		SS-7244H0001XX	
			Qc Code	FS		FS	
Parameter	**Units**	**Human**	**Ecological**	Result		Result	
Metals (SW6010B)							
Aluminum	MG/KG	7,600	50	**16900**	J	**23500**	J
Antimony	MG/KG	3.1	0.27	1.3	J	**3.8**	J
Arsenic	MG/KG	0.39	18	**33.7**		**47.5**	
Barium	MG/KG	540	330	19.2		23.8	
Beryllium	MG/KG	15	10	0.29	J	0.42	J
Cadmium	MG/KG	3.7	0.36	**22.3**		**23.4**	
Calcium	MG/KG			9460	J	9640	
Chromium	MG/KG	21	0.4	**35.6**		**57.5**	J
Cobalt	MG/KG	470	13	7.2		8	J
Copper	MG/KG	310	28	**936**		**1250**	
Iron	MG/KG	2,300	200	**19800**		**25400**	
Lead	MG/KG	400	11	346		**633**	
Magnesium	MG/KG			20000		35900	
Manganese	MG/KG	180	100	**522**		**685**	
Nickel	MG/KG	160	30	29		32.4	
Potassium	MG/KG			1240	J	1760	J
Selenium	MG/KG	39	0.52	1.2	J	1.7	J
Silver	MG/KG	39	2	2.1		2.9	J
Sodium	MG/KG			-		**77.7**	J
Thallium	MG/KG	0.52	1	0.42		-	
Vanadium	MG/KG	55	2	23.6		26	
Zinc	MG/KG	2,300	49	**7420**		**6550**	
Mercury	MG/KG	2.3	0.1	0.29		1	

Table 4.1-11
Summary of Residential Area Surface Soil Sample Results

			Aoc Name	Halo		Halo		Halo		Halo	
			Exposure Area	Residential Soil		Residential Soil		Residential Soil		Residential Soil	
			Field Sample Date	8/1/2007		8/2/2007		8/2/2007		8/2/2007	
			Loc Name	SS-7247H		SS-7248H		SS-7249H		SS-7251H	
			Sample ID	SS-7247H0001XX		SS-7248H0001XX		SS-7249H0001XX		SS-7251H0001XX	
			Qc Code	FS		FS		FS		FS	
Parameter	**Units**	**Human**	**Ecological**	Result		Result		Result		Result	
Metals (SW6010B)											
Aluminum	MG/KG	7,600	50	**24400**	J	**14500**	J	**17400**	J	**19500**	J
Antimony	MG/KG	3.1	0.27	0.51	J	0.38	J	1.1	J	-	
Arsenic	MG/KG	0.39	18	**14.1**		**12.5**		**10.2**		**11.8**	
Barium	MG/KG	540	330	100		45.4		92.7		59.8	
Beryllium	MG/KG	15	10	0.69		0.37	J	0.44	J	0.52	
Cadmium	MG/KG	3.7	0.36	0.36		**5.4**		**6.1**		1.2	
Calcium	MG/KG			1080	J	1810	J	3290		2850	J
Chromium	MG/KG	21	0.4	**40.8**		19.1		**26.2**	J	**25**	
Cobalt	MG/KG	470	13	9.4		5.7		3.6	J	5.4	
Copper	MG/KG	310	28	42.8		**388**		124		54.7	
Iron	MG/KG	2,300	200	**29900**		**16900**		**19800**		**20600**	
Lead	MG/KG	400	11	124		208		337		90.8	
Magnesium	MG/KG			6210		6240		4060		4060	
Manganese	MG/KG	180	100	**471**		**366**		**336**		**299**	
Nickel	MG/KG	160	30	30.5		15.9		14.1		17.8	
Potassium	MG/KG			2530	J	867	J	1280	J	1350	J
Selenium	MG/KG	39	0.52	-		-		0.48	J	-	
Silver	MG/KG	39	2	-		0.72	J	0.2	J	-	
Sodium	MG/KG			-		-		**156**	J	-	
Thallium	MG/KG	0.52	1	0.21	J	0.15	J	-		0.14	J
Vanadium	MG/KG	55	2	41		20.8		28.5		29.1	
Zinc	MG/KG	2,300	49	200		1220		1640		301	
Mercury	MG/KG	2.3	0.1	0.06		0.26		0.2		0.11	

Notes:
AOC - Area of Concern
Dash "-" represents analyte analyzed for and not detected
Blank cell = not analyzed
Qualifiers = J - estimated value

Prepared\Date: JKR 02/29/08
Checked\Date: SFC 03/28/08

Shaded cell = result greater than the USEPA Region IX PRGs

R- rejected result
EB - contamination in associated equipment blank

Table source: MACTEC 2009, Callahan Mine Superfund Site, Final RI Report

Table R-2.4
Summary of XRF Surface Soil Sample Results-Halo
Remedial Investigation Report

Callahan Mine Superfund Site
Brooksville, Maine

			Aoc Name	Halo		Halo		Halo		Halo		Halo		Halo		Halo	
			Exposure Area	Residential Soil		Residential Soil		Residential Soil		Residential Soil		Residential Soil		Residential Soil		Residential Soil	
			Field Sample Date	8/1/2007		8/1/2007		8/1/2007		8/1/2007		8/1/2007		8/2/2007		8/2/2007	
			Loc Name	SS-7243H		SS-7244H		SS-7245H		SS-7246H		SS-7247H		SS-7250H		SS-7248H	
			Sample ID	SS-7243H0001XX		SS-7244H0001XX		SS-7245H0001XX		SS-7246H0001XX		SS-7247H0001XX		SS-7250H0001XX		SS-7248H0001XX	
			Qc Code	FS		FS		FS		FS		FS		FS		FS	
Parameter	**Units**	**Human**	**Ecological**	Result		Result		Result		Result		Result		Result		Result	
XRF																	
Antimony	MG/KG	3.1	0.27	-		-		-		-		-		-		-	
Arsenic	MG/KG	0.39	18	**35**		**56**		**41**		**27**		**13**		**12**		**32**	
Barium	MG/KG	540	330	**770**		**1300**		-		**790**		-		-		-	
Cadmium	MG/KG	3.7	0.36	-		-		**37**	J	-		-		-		-	
Chromium	MG/KG	21	0.4	**130**		**160**		-		-		**98**		-		-	
Cobalt	MG/KG	470	13	-		-		-		-		-		-		-	
Copper	MG/KG	310	28	**860**		**1300**		**870**		110		45		69		**750**	
Lead	MG/KG	400	11	**580**		**1000**		**980**		**530**		160		90		**480**	
Manganese	MG/KG	180	100	**1200**		**1400**		**940**		**1500**		**750**		**540**		**910**	
Mercury	MG/KG	2.3	0.1	-		-		-		-		-		-		-	
Nickel	MG/KG	160	30	-		-		-		-		-		-		-	
Selenium	MG/KG	39	0.52	-		-		-		-		-		-		-	
Silver	MG/KG	39	2	-		-		-		-		-		-		-	
Thallium	MG/KG	0.52	1	-		-		-		-		-		-		-	
Zinc	MG/KG	2,300	49	**9700**		**11000**		**3300**		710		240		460		**2600**	

Notes:
AOC - Area of Concern
Dash "-" represents analyte analyzed for and not detected
Blank cell = not analyzed
Qualifiers = J - estimated value

Shaded cell = result greater than the lower of the human health

R- rekected result
EB - contamination in associated equipment blank

or ecological screening value

Table R-2.4
Summary of XRF Surface Soil Sample Results-Halo
Remedial Investigation Report

Callahan Mine Superfund Site
Brooksville, Maine

			Aoc Name	Halo		Halo		Halo		Halo		Halo		Halo		Halo	
			Exposure Area	Residential Soil		Residential Soil		Residential Soil		Residential Soil		Residential Soil		Residential Soil		Residential Soil	
			Field Sample Date	8/2/2007		8/2/2007		8/2/2007		8/16/2007		8/16/2007		8/16/2007		8/16/2007	
			Loc Name	SS-7249H		SS-7252H		SS-7251H		SS-7258H		SS-7253H		SS-7254H		SS-7255H	
			Sample ID	SS-7249H0001XX		SS-7252H0001XX		SS-7251H0001XX		SS-7258H0001XX		SS-7253H0001XX		SS-7254H0001XX		SS-7255H0001XX	
			Qc Code	FS		FS		FS		FS		FS		FS		FS	
Parameter	**Units**	**Human**	**Ecological**	Result		Result		Result		Result		Result		Result		Result	
XRF																	
Antimony	MG/KG	3.1	0.27	-		-		-		-		-		-		-	
Arsenic	MG/KG	0.39	18	**30**		**14**		**21**		**39**		**42**		**30**		-	
Barium	MG/KG	540	330	**960**		-		-		**1200**		-		-		-	
Cadmium	MG/KG	3.7	0.36	**39**	J	-		-		-		-		-		-	
Chromium	MG/KG	21	0.4	-		-		-		**180**		-		-		-	
Cobalt	MG/KG	470	13	-		-		-		-		-		-		-	
Copper	MG/KG	310	28	250		41		72		**860**		**350**		100		25	
Lead	MG/KG	400	11	**660**		130		130		**540**		**720**		**480**		41	
Manganese	MG/KG	180	100	**920**		**980**		**540**		**1500**		**940**		**1000**		**650**	
Mercury	MG/KG	2.3	0.1	-		-		-		-		-		-		-	
Nickel	MG/KG	160	30	-		-		-		-		-		-		-	
Selenium	MG/KG	39	0.52	-		-		-		-		-		-		-	
Silver	MG/KG	39	2	-		-		-		-		-		-		-	
Thallium	MG/KG	0.52	1	-		-		-		-		-		-		-	
Zinc	MG/KG	2,300	49	**3500**		300		420		**5800**		**2400**		1300		150	

Notes:
AOC - Area of Concern
Dash "-" represents analyte analyzed for and not detected
Blank cell = not analyzed
Qualifiers = J - estimated value

Shaded cell = result greater than the lower of the human health

R- rekected result
EB - contamination in associated equipment blank

or ecological screening value

Table R-2.4
Summary of XRF Surface Soil Sample Results-Halo
Remedial Investigation Report

Callahan Mine Superfund Site
Brooksville, Maine

			Aoc Name	Halo		Halo		Halo		Halo		Halo		Halo		Halo	
			Exposure Area	Residential Soil		Residential Soil		Residential Soil		Residential Soil		Residential Soil		Residential Soil		Residential Soil	
			Field Sample Date	8/16/2007		8/16/2007		9/12/2007		9/12/2007		9/12/2007		9/12/2007		9/12/2007	
			Loc Name	SS-7256H		SS-7257H		SS-7259H		SS-7260H		SS-7261H		SS-7262H		SS-7263H	
			Sample ID	SS-7256H0001XX		SS-7257H0001XX		SS-7259H0001XX		SS-7260H0001XX		SS-7261H0001XX		SS-7262H0001XX		SS-7263H0001XX	
			Qc Code	FS		FS		FS		FS		FS		FS		FS	
Parameter	**Units**	**Human**	**Ecological**	Result		Result		Result		Result		Result		Result		Result	
XRF																	
Antimony	MG/KG	3.1	0.27	-		-		-		-		-		-		-	
Arsenic	MG/KG	0.39	18	**19**		**19**		**13**		**17**		**11**		**10**		**86**	
Barium	MG/KG	540	330	-		-		-		-		-		-		-	
Cadmium	MG/KG	3.7	0.36	-		-		-		-		-		-		-	
Chromium	MG/KG	21	0.4	-		-		-		-		-		-		-	
Cobalt	MG/KG	470	13	-		-		-		-		-		-		-	
Copper	MG/KG	310	28	140		74		88		98		-		-		**1200**	
Lead	MG/KG	400	11	310		160		44		70		41		34		**1400**	
Manganese	MG/KG	180	100	**1000**		**640**		**350**		**360**		**450**		**740**		**1100**	
Mercury	MG/KG	2.3	0.1	-		-		-		-		-		-		-	
Nickel	MG/KG	160	30	-		-		-		-		-		-		-	
Selenium	MG/KG	39	0.52	-		-		-		-		-		-		-	
Silver	MG/KG	39	2	-		-		-		-		-		-		-	
Thallium	MG/KG	0.52	1	-		-		-		**21**		-		**18**		-	
Zinc	MG/KG	2,300	49	1300		590		330		350		160		200		**2600**	

Notes:
AOC - Area of Concern
Dash "-" represents analyte analyzed for and not detected
Blank cell = not analyzed
Qualifiers = J - estimated value

Shaded cell = result greater than the lower of the human health

R- rekected result
EB - contamination in associated equipment blank

or ecological screening value

Table R-2.4
Summary of XRF Surface Soil Sample Results-Halo
Remedial Investigation Report

Callahan Mine Superfund Site
Brooksville, Maine

			Aoc Name	Halo		Halo		Halo		Halo		Halo		Halo		Halo	
			Exposure Area	Residential Soil		Residential Soil		Residential Soil		Residential Soil		Residential Soil		Residential Soil		Residential Soil	
			Field Sample Date	9/12/2007		9/12/2007		9/12/2007		9/12/2007		9/12/2007		9/12/2007		9/12/2007	
			Loc Name	SS-7265H		SS-7266H		SS-7267H		SS-7268H		SS-7269H		SS-7269H		SS-7270H	
			Sample ID	SS-7265H0001XX		SS-7266H0001XX		SS-7267H0001XX		SS-7268H0001XX		SS-7269H0001XD		SS-7269H0001XX		SS-7270H0001XX	
			Qc Code	FS		FS		FS		FS		FD		FS		FS	
Parameter	**Units**	**Human**	**Ecological**	Result		Result		Result		Result		Result		Result		Result	
XRF																	
Antimony	MG/KG	3.1	0.27	-		-		-		-		-		-		-	
Arsenic	MG/KG	0.39	18	**19**		**40**		-		**30**		**30**		**56**		**49**	
Barium	MG/KG	540	330	-		-		-		-		-		-		-	
Cadmium	MG/KG	3.7	0.36	-		-		-		-		**48**		-		-	
Chromium	MG/KG	21	0.4	-		-		-		-		-		-		-	
Cobalt	MG/KG	470	13	-		260		-		280		-		210		-	
Copper	MG/KG	310	28	64		**1300**		**1400**		**450**		**1400**		**1300**		130	
Lead	MG/KG	400	11	200		**720**		**860**		**460**		**640**		**570**		**1500**	
Manganese	MG/KG	180	100	**520**		**1100**		**930**		**430**		**960**		**790**		**520**	
Mercury	MG/KG	2.3	0.1	-		-		-		-		-		-		-	
Nickel	MG/KG	160	30	-		-		-		-		-		-		-	
Selenium	MG/KG	39	0.52	-		-		-		-		-		-		-	
Silver	MG/KG	39	2	-		-		-		-		-		-		-	
Thallium	MG/KG	0.52	1	-		-		-		-		-		-		-	
Zinc	MG/KG	2,300	49	580		**6200**		**9200**		1100		**5500**		**5600**		2000	

Notes:
AOC - Area of Concern
Dash "-" represents analyte analyzed for and not detected
Blank cell = not analyzed
Qualifiers = J - estimated value

Shaded cell = result greater than the lower of the human health

R- rekected result
EB - contamination in associated equipment blank

or ecological screening value

Table R-2.4
Summary of XRF Surface Soil Sample Results-Halo
Remedial Investigation Report

Callahan Mine Superfund Site
Brooksville, Maine

			Aoc Name	Halo		Halo		Halo		Halo		Halo		Halo		Halo	
			Exposure Area	Residential Soil		Residential Soil		Residential Soil		Residential Soil		Residential Soil		Residential Soil		Residential Soil	
			Field Sample Date	9/12/2007		9/12/2007		9/12/2007		9/12/2007		9/12/2007		9/12/2007		9/12/2007	
			Loc Name	SS-7271H		SS-7272H		SS-7273H		SS-7274H		SS-7275H		SS-7276H		SS-7277H	
			Sample ID	SS-7271H0001XX		SS-7272H0001XX		SS-7273H0001XX		SS-7274H0001XX		SS-7275H0001XX		SS-7276H0001XX		SS-7277H0001XX	
			Qc Code	FS		FS		FS		FS		FS		FS		FS	
Parameter	**Units**	**Human**	**Ecological**	Result		Result		Result		Result		Result		Result		Result	
XRF																	
Antimony	MG/KG	3.1	0.27	-		-		-		-		-		-		-	
Arsenic	MG/KG	0.39	18	-		-		-		**14**		**14**		-		-	
Barium	MG/KG	540	330	-		-		-		-		-		-		-	
Cadmium	MG/KG	3.7	0.36	-		-		-		-		-		-		-	
Chromium	MG/KG	21	0.4	-		-		-		-		-		-		-	
Cobalt	MG/KG	470	13	-		-		-		220		-		160		-	
Copper	MG/KG	310	28	270		150		-		60		47		27		31	
Lead	MG/KG	400	11	**1100**		**800**		30		59		56		29		47	
Manganese	MG/KG	180	100	**2800**		**1200**		**330**		**330**		**380**		**240**		**270**	
Mercury	MG/KG	2.3	0.1	-		-		-		-		-		-		-	
Nickel	MG/KG	160	30	-		-		-		-		-		-		-	
Selenium	MG/KG	39	0.52	-		-		-		-		-		-		-	
Silver	MG/KG	39	2	-		-		-		-		-		-		-	
Thallium	MG/KG	0.52	1	-		-		-		-		-		-		-	
Zinc	MG/KG	2,300	49	**3600**		1600		74		470		250		110		140	

Notes:
AOC - Area of Concern
Dash "-" represents analyte analyzed for and not detected
Blank cell = not analyzed
Qualifiers = J - estimated value

Shaded cell = result greater than the lower of the human health

R- rekected result
EB - contamination in associated equipment blank

or ecological screening value

Table R-2.4
Summary of XRF Surface Soil Sample Results-Halo
Remedial Investigation Report

Callahan Mine Superfund Site
Brooksville, Maine

			Aoc Name	Halo		Halo		Halo		Halo		Halo		Halo		Halo	
			Exposure Area	Residential Soil		Residential Soil		Residential Soil		Residential Soil		Residential Soil		Residential Soil		Residential Soil	
			Field Sample Date	9/12/2007		9/12/2007		9/12/2007		9/12/2007		9/12/2007		9/12/2007		9/13/2007	
			Loc Name	SS-7278H		SS-7278H		SS-7279H		SS-7280H		SS-7281H		SS-7282H		SS-7283H	
			Sample ID	SS-7278H0001XD		SS-7278H0001XX		SS-7279H0001XX		SS-7280H0001XX		SS-7281H0001XX		SS-7282H0001XX		SS-7283H0001XX	
			Qc Code	FD		FS		FS		FS		FS		FS		FS	
Parameter	**Units**	**Human**	**Ecological**	Result		Result		Result		Result		Result		Result		Result	
XRF																	
Antimony	MG/KG	3.1	0.27	-		-		-		-		-		-		-	
Arsenic	MG/KG	0.39	18	-		**51**		**13**		**21**		-		**34**		**60**	
Barium	MG/KG	540	330	-		-		-		-		-		-		-	
Cadmium	MG/KG	3.7	0.36	-		-		-		-		-		-		-	
Chromium	MG/KG	21	0.4	-		-		-		-		-		-		-	
Cobalt	MG/KG	470	13	-		-		-		-		-		-		-	
Copper	MG/KG	310	28	-		140		-		-		120		200		**430**	
Lead	MG/KG	400	11	-		**1000**		22		-		280		240		**1100**	
Manganese	MG/KG	180	100	-		**190**		**340**		**320**		110		**360**		**1100**	
Mercury	MG/KG	2.3	0.1	-		-		-		-		-		-		-	
Nickel	MG/KG	160	30	-		-		-		-		-		-		-	
Selenium	MG/KG	39	0.52	-		-		-		-		-		-		-	
Silver	MG/KG	39	2	-		-		-		-		-		-		-	
Thallium	MG/KG	0.52	1	-		-		-		-		-		-		-	
Zinc	MG/KG	2,300	49	-		530		84		79		170		960		1300	

Notes:
AOC - Area of Concern
Dash "-" represents analyte analyzed for and not detected
Blank cell = not analyzed
Qualifiers = J - estimated value

Shaded cell = result greater than the lower of the human health

R- rekected result
EB - contamination in associated equipment blank

or ecological screening value

Table R-2.4
Summary of XRF Surface Soil Sample Results-Halo
Remedial Investigation Report

Callahan Mine Superfund Site
Brooksville, Maine

			Aoc Name	Halo		Halo		Halo		Halo	
			Exposure Area	Residential Soil		Residential Soil		Residential Soil		Residential Soil	
			Field Sample Date	9/13/2007		9/13/2007		9/13/2007		9/13/2007	
			Loc Name	SS-7284H		SS-7285H		SS-7286H		SS-7287H	
			Sample ID	SS-7284H0001XX		SS-7285H0001XX		SS-7286H0001XX		SS-7287H0001XX	
			Qc Code	FS		FS		FS		FS	
Parameter	**Units**	**Human**	**Ecological**	Result		Result		Result		Result	
XRF											
Antimony	MG/KG	3.1	0.27	-		-		-		-	
Arsenic	MG/KG	0.39	18	**57**		**17**		-		**45**	
Barium	MG/KG	540	330	-		-		-		-	
Cadmium	MG/KG	3.7	0.36	-		-		-		-	
Chromium	MG/KG	21	0.4	-		-		-		-	
Cobalt	MG/KG	470	13	180		270		200		-	
Copper	MG/KG	310	28	**810**		-		-		55	
Lead	MG/KG	400	11	**1000**		38		22		340	
Manganese	MG/KG	180	100	**960**		**300**		**350**		**760**	
Mercury	MG/KG	2.3	0.1	-		-		-		-	
Nickel	MG/KG	160	30	-		-		-		-	
Selenium	MG/KG	39	0.52	-		-		-		-	
Silver	MG/KG	39	2	-		-		-		-	
Thallium	MG/KG	0.52	1	-		-		-		-	
Zinc	MG/KG	2,300	49	2200		130		65		540	

Notes:
AOC - Area of Concern
Dash "-" represents analyte analyzed for and not detected
Blank cell = not analyzed
Qualifiers = J - estimated value

Shaded cell = result greater than the lower of the human health

R- rekected result
EB - contamination in associated equipment blank

Table source: MACTEC 2009, Callahan Mine Superfund Site , Final RI Report, Appendix R
Checked by: SWR 09/16/2010

or ecological screening value

Table R-2.5
Summary of XRF Surface Soil Sample Results-Mine Ops
Remedial Investigation Report

Callahan Mine Superfund Site
Brooksville, Maine

			Aoc Name	Mine Ops Area		Mine Ops Area		Mine Ops Area		Mine Ops Area		Mine Ops Area		Mine Ops Area	
			Exposure Area	Exposure Area 9A		Exposure Area 9A		Exposure Area 9A		Exposure Area 9A		Exposure Area 9A		Exposure Area 9A	
			Field Sample Date	7/12/2007		7/12/2007		7/12/2007		7/12/2007		7/12/2007		7/12/2007	
			Loc Name	SS-7141		SS-7135		SS-7136		SS-7137		SS-7138		SS-7139	
			Sample ID	SS-714100001XX		SS-713500001XX		SS-713600001XX		SS-713700001XX		SS-713800001XX		SS-713900001XX	
			Qc Code	FS		FS		FS		FS		FS		FS	
Parameter	**Units**	**Human**	**Ecological**	Result		Result		Result		Result		Result		Result	
XRF															
Antimony	MG/KG	3.1	0.27	-		-		-		-		-		-	
Arsenic	MG/KG	0.39	18	**39**		**99**		**86**		**86**		**54**		**39**	
Barium	MG/KG	540	330	**1600**		**5400**		**4700**		**1800**		**1000**		**1800**	
Cadmium	MG/KG	3.7	0.36	-		**98**		**77**		**52**		**43**		**60**	
Chromium	MG/KG	21	0.4	**210**		-		**540**		**300**		**250**		-	
Cobalt	MG/KG	470	13	-		-		-		-		-		-	
Copper	MG/KG	310	28	**2300**		**16000**		**21000**		**5200**		**1900**		**4300**	
Lead	MG/KG	400	11	**960**		**2500**		**3000**		**2400**		**970**		**940**	
Manganese	MG/KG	180	100	**1600**		**2900**		**3300**		**3000**		**1400**		**1600**	
Mercury	MG/KG	2.3	0.1	-		-		-		-		-		-	
Nickel	MG/KG	160	30	-		-		-		-		-		-	
Selenium	MG/KG	39	0.52	-		-		-		-		-		-	
Silver	MG/KG	39	2	-		-		**120**		**110**		-		-	
Thallium	MG/KG	0.52	1	-		-		-		-		-		-	
Zinc	MG/KG	2,300	49	**12000**		**64000**		**62000**		**23000**		**12000**		**16000**	

Notes:
AOC - Area of Concern
Dash "-" represents analyte analyzed for and not detected
Blank cell = not analyzed
Qualifiers = J - estimated value

Shaded cell = result greater than the lower of the human health

R- rekected result
EB - contamination in associated equipment blank

or ecological screening value

Table R-2.5
Summary of XRF Surface Soil Sample Results-Mine Ops
Remedial Investigation Report

Callahan Mine Superfund Site
Brooksville, Maine

			Aoc Name	Mine Ops Area		Mine Ops Area		Mine Ops Area		Mine Ops Area		Mine Ops Area	
			Exposure Area	Exposure Area 9A		Exposure Area 9A		Exposure Area 9A		Exposure Area 9A		Exposure Area 9A	
			Field Sample Date	7/12/2007		7/18/2007		7/18/2007		7/18/2007		7/18/2007	
			Loc Name	SS-7140		TP-7119		TP-7119		TP-7119		TP-7121	
			Sample ID	SS-714000001XX		TP-711909001XD		TP-711909001XX		TP-711904001XX		TP-712101001XX	
			Qc Code	FS		FD		FS		FS		FS	
Parameter	**Units**	**Human**	**Ecological**	Result		Result		Result		Result		Result	
XRF													
Antimony	MG/KG	3.1	0.27	-		-		-		-		-	
Arsenic	MG/KG	0.39	18	**34**		-		**16**		**62**		-	
Barium	MG/KG	540	330	**1100**		-		-		**1500**		-	
Cadmium	MG/KG	3.7	0.36	**57**		-		-		**37**		-	
Chromium	MG/KG	21	0.4	**170**		-		-		-		-	
Cobalt	MG/KG	470	13	-		-		-		-		-	
Copper	MG/KG	310	28	**2100**		49		54		**2200**		280	
Lead	MG/KG	400	11	**520**		54		47		**980**		**430**	
Manganese	MG/KG	180	100	**1700**		**520**		**530**		**1500**		**590**	
Mercury	MG/KG	2.3	0.1	-		-		-		-		-	
Nickel	MG/KG	160	30	91		-		-		-		-	
Selenium	MG/KG	39	0.52	-		-		-		-		-	
Silver	MG/KG	39	2	-		-		-		-		-	
Thallium	MG/KG	0.52	1	-		-		-		-		-	
Zinc	MG/KG	2,300	49	**12000**		260		220		**9200**		510	

Notes:
AOC - Area of Concern
Dash "-" represents analyte analyzed for and not detected
Blank cell = not analyzed
Qualifiers = J - estimated value

Shaded cell = result greater than the lower of the human health

R- rekected result
EB - contamination in associated equipment blank

Table source: MACTEC 2009, Callahan Mine Superfund Site , Final RI Report, Appendix R
Checked by: SWR 09/16/2010

or ecological screening value

APPENDIX B

VALUE ENGINEERING SCREEN

Value Engineering Screen
Callahan Mine Superfund Site
OU1 Remedial Action

Introduction

A value engineering (VE) screen is required as part of the design for Superfund Remedial Action programs (OSWER Directive 9355.5-24). A VE screen was performed for the Callahan Mine Superfund Site Operable Unit (OU) 1 Remedial Action as part of the Remedial Design.

Outcome

The VE screen for the Callahan Mine Superfund Site OU1 Remedial Action confirmed that the volume of material to be excavated, off-site disposal costs (including transportation), and interim management of materials are the critical cost elements for the OU1 Remedial Action. The Remedial Design was developed with a good understanding of these items and issues. The VE screen determined that a VE study would not be necessary for the Remedial Action because of the nature of the cleanup (excavation and disposal/stockpile) and the overall cost being below the $25 million level that would trigger a mandatory VE study. More detail regarding the VE screen is provided below.

Value Engineering Screen

Figure 4-13 of the U.S. Environmental Protection Agency (EPA) Remedial Design/Remedial Action Handbook (EPA 540/R-95/059) provides an outline of the factors to be considered in a VE screen. These factors were applied to the two major components of the Callahan Mine Superfund Site Operable Unit 1 Remedial Action. The components are:

1. Excavation of polychlorinated biphenyls (PCBs) in the former Mine Operations Area, off-site disposal of PCBs, and grading/restoration of disturbed areas; and

2. Excavation of arsenic, lead, and thallium contaminated soil in residential use properties and creation of a stockpile and management of the stockpile containing the arsenic/lead/thallium contaminated soil.

Common to all components of the Remedial Design is the response to the questions:

> Was the design rushed?; and
> Does it (Remedial Design) use traditional design?.

The design was completed on an accelerated schedule, but it was not rushed to the extent that quality or completeness is a concern. The Remedial Design is also fairly streamlined because of the nature of the work and follows the components of traditional design appropriate for the work. The initial submittal was the draft final Remedial Design. The initial design components (conceptual and intermediate) were addressed in technical meetings with EPA, Maine Department of Environmental Protection, and Maine Department of Transportation. This approach was a VE of the design process, given that the selected Remedial Action reduced initial cost and allowed for the project to be completed on schedule.

1. Excavation of PCBs in the Former Mine Operations Area and Off-Site disposal

This activity involves the excavation of PCBs above the Site cleanup level of 1 milligram per kilogram. The cost of this component for the Remedial Action is highly dependent upon the volume of soil/waste above the cleanup level. All other aspects, including methods and equipment, are fairly standard with flexibility in the design to accommodate the use of the most cost effective approach to excavate. A pre-excavation survey will be completed to better define the extent of contamination and allow for segregation of the material based on disposal requirements. The VE screen identified that the volume of material is the critical component relative to the cost of this component of the Remedial Action. The current volume estimate was based on the Remedial Investigation program sampling activities with a contingency adjustment for additional volume. A pre-excavation sampling program will be performed to refine the volume estimate. While the volume to be excavated is a significant cost factor, no changes to the Remedial Design would be necessary were the volume to increase as the cleanup approach is the only acceptable option for this material. The same is true for off-site disposal. The Remedial Design allows for the selection of the most cost-effective location that complies with the EPA Off-Site Rule.

The grading and restoration activities are standard construction activities that do not require special equipment. This cost will be driven by the need to ensure that the Site is very stable for the period between the implementation of OU1 and OU3 and that surface water run-on and run-

off for the area affected by the cleanup is properly addressed to avoid conditions that could increase the release of contamination to Goose Pond. Because the majority of the excavation will not be backfilled to allow for the OU3 Remedial Design to determine the final grading plan for that area, sediment basins and more extensive grading of the area leading into the Ore Pad area will be performed to prevent a release to surface water.

2. Excavation of Arsenic, Lead, and Thallium Contaminated Soil in Residential Use Properties

This activity involves the excavation of arsenic, lead, and thallium contaminated soil exceeding the Site cleanup levels of 14 mg/kg for arsenic; 375 mg/kg for lead; and 15 mg/kg for thallium. The Remedial Design allows for the material to placed at the western edge of the Tailings Impoundment. As with the first component, the cost of this component of the Remedial Action is highly dependent upon the volume of soil/waste above the cleanup levels. All other aspects, including methods and equipment, are standard construction activities with flexibility in the design to accommodate the use of the most cost effective excavation approach. A pre-excavation survey will be completed to better define the extent of contamination and allow for segregation of the material based on disposal requirements.

The VE screen identified that the volume of material is the critical component relative to the cost of this component of the Remedial Action. The current volume estimate was based on the sampling activities of the Remedial Investigation program with a contingency adjustment for additional volume. A pre-excavation sampling program will be performed to refine the volume estimate. While the volume to be excavated is a significant cost factor, no changes to the Remedial Design would be necessary were the volume to increase as the cleanup approach is the only acceptable option for this material.

The placement of the material at the back of the Tailings Impoundment was identified as an activity that would incur greater cost than simply creating a stockpile. The decision to place the material at the back of the Tailings Impoundment, however, avoids having to excavate and move the material a second time during the OU3 Remedial Action. In addition, the material will be placed in a manner and location that will contribute to the OU3 Remedial Action.

Summary

A VE screen was completed for the Callahan Mine Operable Unit 1 Remedial Design. The VE screen identified several components of the design that are critical items with respect to cost. The Remedial Design has taken these items into consideration in developing the final Remedial Design.

VE Screen Summary Table

Screening Question	**Component 1**	**Component 2**
Is the item expensive (relative to the other components of the Design)?	Yes	Yes
Is the item complex?	No	No
Is it a high-volume item? Can a simple change in one item produce large savings in the total project?	Yes	Yes
Does the item use critical materials?	No	No
Is it difficult to construct?	No	No
Does it have a high O & M cost?	No	No
Does it require specialized skills to construct or operate?	No	No
Does the design advocate proprietary technology (with royalties)?	No	No
Will it require highly trained personnel to operate?	No	No
Is the design treating everything using a single piece of equipment, when several pieces of equipment would be more cost effective and efficient?	No	No
Is the design using technology already proven in the industry in similar commercial applications?	Yes	Yes
Has the design used predesigned skids or equipment packages effectively?	N/A	N/A
Does it use obsolete materials and methods?	No	No
Was the design rushed?	See text	See text
Does it use traditional design?	See text	See text
Is the competition producing the item at a lower cost?	No	No

APPENDIX C

TECHNICAL SPECIFICATIONS

TECHNICAL SPECIFICATIONS
OPERABLE UNIT 1

Callahan Mine Superfund Site
Brooksville, Maine

DIVISION 1 – GENERAL REQUIREMENTS

01010	Summary of Work
01340	Submittals
01351	Health and Safety
01450	Construction Quality Assurance
01600	Site Management
01780	Project Record Documents

DIVISION 2 – SITE WORK

02315	Earthwork
02332	Off-Site Shipment and Disposal
02370	Sediment and Erosion Control
02741	Road Construction
02950	Restoration

SECTION 01010

SUMMARY OF WORK

PART 1 - GENERAL

1.1 SUMMARY

A. The scope of work for the Operable Unit (OU) 1 and Early Action OU2 at the Callahan Mine Superfund Site (Site) involves cleanup activities associated with mine waste materials, rock, and soils. The Site is located in the village of Harborside in the Town of Brooksville, Maine. The work to be completed is based on the United States Environmental Protection Agency (EPA) Record of Decision (ROD) for OU1 and a Memorandum dated September 30, 2009, regarding Early Action for OU2. The U.S. Environmental Protection Agency is the lead federal agency for the cleanup action. The Maine Department of Environmental Protection (MEDEP) is the lead State agency for the implementation of the OU1 cleanup actions on behalf of the State of Maine. References to the Owner refer to the Maine DEP. The OU1 remediation consists of two main work areas identified as the former Mine Operations Area and a Residential Use Area located at the north end of the Site. The work will be completed as a performance based contract with the implementation Contractor providing all required design documents and implementing the identified cleanup activities. The following list provides a summary of the required work components associated with the selected remedy for the OU1 and Early Action OU2:

- Preparation of required implementation Project Work Plans, including Cleanup Implementation Drawings, Construction Quality Assurance Plan (includes Sampling and Analysis Plan), Off-Site Shipment and Disposal Plan, Sediment and Erosion Control Plan, Site Management Plan, Interim Stockpile Plan, Property Restoration Plan, and a Site Health and Safety Plan (HASP);
- Pre-excavation investigation studies, including conducting pre-characterization soil sampling and analyses;
- Excavation and proper off-site disposal of soil contaminated with polychlorinated biphenyls (PCBs) exceeding site-specific cleanup levels within the former Mine Operation Area;
- Excavation and off-site disposal of Comprehensive Environmental Response and Liability Act (CERCLA) waste commingled with petroleum-contaminated soil exceeding site-specific cleanup levels within the former Mine Operation Area;
- Excavation of soil containing arsenic, thallium, and lead exceeding site-specific cleanup levels in the Residential Use Area of the Site;
- Backfill of Residential Use Area excavations with clean imported material and surface restoration to match existing conditions;
- Placement of excavated soils from the Residential Use Area within the existing Tailings Impoundment located on the former Callahan Mine property;

- Excavated soil material placed within the Tailings Impoundment shall be covered with topsoil and seeded. Onsite topsoil material, either suitable topsoil grubbed from work areas or "Stink Cove Sediment" (available from the bench located below Waste Rock Pile #1), shall be used for covering materials placed in the Tailings Impoundment.
- As necessary to complete the work, conduct upgrades to existing haul roads and make drainage improvements to facilitate access and control surface runoff.

B. Optional Work Components: In addition to the required work components additional remedial activities may be necessary to stabilize the Site until subsequent Remedial Actions can be implemented. The activities are identified as options for the purpose of the bid and pricing and shall be implemented based on direction from the Owner... The following work components shall be considered optional and may be completed in whole or in part based on direction of the Owner:

1. To establish stable grades surrounding the area where PCBs will be excavated and to prevent the direct release of contaminated surface water run-off to Dyer Cove as a result of drainage changes it may be necessary to remove the waste rock in the Ore Pad. The ore rock located in the Ore Pad, basically identified by an orange color, may be excavated to bedrock (±5 feet). The excavation limits will be conducted by visual observation and as directed by the Resident. The edges of the excavation limits shall be graded to minimize steep slopes and blend into surrounding grades. Excavated materials will be placed onto the Tailings Impoundment. This material shall be stabilized to prevent erosion.

2. Drainage and Sedimentation Pond improvements within the former Mine Operations Area. This optional work may consist of constructing several stormwater sedimentation ponds as well as drainage ditch improvements/construction to direct surface runoff to the sedimentation ponds.

.

3. To prevent erosion and transport of sediment from the area designated to stockpile the excavated contaminated soils from the Residential Use Area and non-PCB material excavated from the PCB cleanup area (or Ore Pad), drainage controls may be necessary to prevent run-on and control run-off. Construction of a bermed swale along the west side of the Tailings Impoundment to provide stormwater run-on control and convey upgradient surface runoff around the Tailings Impoundment to several stabilized outfalls may be needed.

C. The following list summarizes the primary actions and anticipated construction sequence:

1. Prior to conducting construction activities, submit required Project Work Plans, including but not limited to: Implementation Drawings, Construction Quality Assurance Plan, Off-Site Shipment and Disposal Plan, Sediment and Erosion Control Plan, Site Management Plan, Interim Stockpile Plan, Property Restoration Plan, Mine Road Restoration Plan, and a Site Health and Safety Plan. Requirements for the required Project Work Plans are outlined in related Project specifications.
2. Establish staging areas and mobilize equipment and personnel to the Site.

3. Attend and support pre-construction meetings with each Residential Use Property owner and perform pre-construction documentation of the properties including conducting visual inspections and taking photograph and video documentation of the existing features at each property within the limits of the Residential Work Area.
4. Conduct pre-excavation characterization sampling and analyses activities at the Mine Operations Area (PCBs) to verify and establish the actual remediation excavation limits.
5. Perform pre-excavation field surveys to be used to verify existing conditions and determining remediation limits and quantities;
6. Prepare the work areas for remediation: install temporary facilities, install construction perimeter fencing and/or warning barriers, establish equipment and material staging/storage areas, and install erosion and sedimentation controls.
7. Demolish existing features (excluding permanent structures to remain) located within the remediation excavation limits and segregate, process, and properly dispose of debris offsite unless otherwise directed by the Owner. Concrete structures, including slabs, foundations, and walls within the PCB remediation area at the Mine Operations Area shall be removed and may be processed, reinforcement bars cut and used as backfill in completed excavations at the Mine Operations Area, or placed in the Tailings Impoundment with the Residential Use excavated soil.
8. Conduct the remediation activities at Residential Use properties and the Mine Operations Area. Excavate contaminated soil/rock materials from the limits indicated on the drawings and confirmed based on pre-excavation characterization activities. Shallow bedrock present in many areas within the remediation area of the Residential Use properties in addition to occupied buildings and completion of excavations will likely require some specialized removal techniques (hand, vacuum).
9. PCB-Contaminated material shall be properly disposed of off-site in accordance with the approved Off-Site Shipment and Disposal Plan.
10. Arsenic, lead, and thallium contaminated soils from the Residential Use Area shall be placed within the Tailings Impoundment in accordance with the approved Stockpiling Plan.
11. Perform post-excavation sampling in accordance with the approved Construction Quality Control Plan.
12. Perform post-excavation or soil removal field surveys to document limits and validate excavation quantities.
13. Completed excavations within the Residential Use Area shall be backfilled as soon as practical. The backfill materials will be specified based on finish restoration requirements: granular common borrow and topsoil below vegetated areas; and granular common borrow and gravel in non-vegetated areas. All backfill material shall be subjected to laboratory analyses to ensure compliance with the Residential Use Area and Mine Operations Area Construction Quality Assurance Plan(s).
14. Restoration will be conducted on all disturbed areas at each of the private properties within the Residential Use Area following completion of the remediation activities. Existing features will be restored to at least an equivalent condition that existed prior to the remediation and/or in accordance with the Restoration Plan for each property.

15. Restoration at the Mine Operations Area by completely backfilling excavations is not required, but shall be conducted by grading of existing material to blend excavation limits smoothly into surrounding grades, eliminating steep slopes, and providing proper drainage.
16. As directed by the Owner, Optional Work Components described in paragraph 1.1.B may be conducted in full or in part depending on available funding.
17. Remove temporary facilities, temporary erosion and sedimentation controls (if Site is adequately stabilized), and clean Site.
18. Provide post-construction Site photographs and topographic survey and as-built drawings including accurate remediation limits.
19. Provide a Remedial Action Report prepared in accordance with EPA guidance Close Out Procedures for National Priorities List Sites, EPA 540-R-98-016, OSWER Directive 9320.2-09A-P, PB98-963223, January 2000.
20. Provide an Operation and Maintenance Plan.
21. Several final inspections shall be performed: a construction completion inspection (which may generate a punch list); a follow-up inspection to verify that punch list items have been satisfactorily addressed (this inspection shall also occur after submittal of draft Remedial Action Report); and an inspection not longer than one year after completion to verify that all work remains operational and functional.

1.2 USE OF PROPERTIES

A. The Mine Operation Area, Mine Tailings Impoundment, Ore Pad, and Waste Rock Piles outside of the Residential properties are under direct control of the Owner and use of the property shall be coordinated with the Owner.

B. Draft Property Restoration Plans have been prepared for the individual Residential Properties. These Plans shall be updated and finalized by the Contractor as required to include actual construction and restoration activities. In addition, the Contractor, in coordination with the Resident, shall attend and support pre-construction meetings with each property owner. The pre-construction meetings will be conducted to review the construction and restoration activities and schedule as well as to address concerns or questions property owners may have.

C. Contractor shall take special precautions when working in close proximity to these occupied areas or adjacent to structures or features which are to remain. Safe access to these occupied facilities must be maintained throughout the Work.

D. Any damage to the property, including septic systems, foundations, driveways, or structures shall be repaired as part of the cleanup action.

1.3 OTHER GENERAL REQUIREMENTS

A. Obtain all necessary construction permits prior to the commencement of work. The Contractor will be responsible for obtaining all required permits. Section 121 (e) 1 of the Superfund law states that “No Federal, State, or Local permit shall be required for the portion of any removal or remedial action conducted entirely on-site, where such Remedial Action is selected and carried out in compliance with section 121” of the Comprehensive Environmental Response, Compensation, and Liability Act, as amended. For the Callahan Mine, all areas within the former Callahan Mine portion of the property and the entire

Residential Use area are within the definition of on-site for the purpose of the permit exclusion.

B. Make arrangements for temporary storage of materials and supplies and for timely delivery to the job site.

C. Maintain up-to-date records.

D. Maintain the Project Site in a neat and safe condition.

1.4 DEFINITIONS

A. "Resident" or "Owner's Representative" as used in these specifications shall mean the Owner's Representative in the field.

B. "Owner" as used in these specifications shall mean the Owner of the Project, which is the Maine DEP.

C. "Contractor or Implementation Contactor" is the firm selected to conduct the remedial construction activities and shall be under contract to the Owner.

D. US EPA is the lead federal agency and will provide oversight of the Remedial Action

E. MEDEP is the lead state agency and will be responsible for implementation of OU1.

END OF SECTION 01010

SECTION 01340

SUBMITTAL PROCEDURES

PART 1 - GENERAL

1.1 DESCRIPTION

A. Required submittals are identified in each technical performance-based specification section of the Contract Documents. The Contractor shall develop a submittal schedule to track the status of all submittals required as part of the work. Submittals shall be provided to the Owner's Representative, as required, unless otherwise specified. The Contractor shall furnish all labor, equipment, and materials necessary to demonstrate that proposed products/materials and proposed means/methods of construction conform to the intent of the performance based specification. Submittals may include:

1. Drawings;
2. Data;
3. Instructions;
4. Schedules;
5. Statements;
6. Reports;
7. Certificates;
8. Samples;
9. Records; and
10. Operation and Maintenance Manuals.

B. The two main work areas for the OU1 remediation in the Contract Documents are identified as the former Mine Operations Area and the Residential Use Area. Contractor shall, at a minimum, prepare and submit the following work plans for approval. Upon approval, these plans will become part of the Contract:

1. Mine Operations Area
   a. Draft and Final Implementation Drawings
   b. Construction Quality Assurance Plan
   c. Off-Site Shipment and Disposal Plan
   d. Sediment and Erosion Control Plan
   e. Site Management Plan
   f. Site Health and Safety Plan
2. Residential Use Area
   a. Draft and Final Implementation Drawings
   b. Construction Quality Assurance Plan
   c. Sediment and Erosion Control Plan
   d. Site Management Plan
   e. Interim Stockpile Plan
   f. Property Restoration Plan
   g. Site Health and Safety Plan

1.2 GENERAL REQUIREMENTS

A. All costs necessary for compliance with requirements of this Section shall be incidental to the bid items under which labor, equipment, and material is paid.

B. All data, drawings, and correspondence from Contractors, manufacturers, or suppliers shall be routed through Contractor. Owner's Representative shall review only such data and details as are transmitted to him by Contractor. All correspondence from Contractor to Owner's Representative shall refer to appropriate specification number and paragraph and/or sheet number of the Drawings containing subject matter of inquiry.

C. Upon review and acceptance of the Submittal by the Owner's Representative, the Submittal shall become a part of the Contract, and the work executed shall be in conformity with the same. Review of Submittals, however, shall in no way release the Contractor from his responsibility for proper fulfillment, by any fabrication, of the requirements of this Contract.

D. The Contractor's attention is specifically directed to the fact that no work shall be conducted, nor equipment or materials ordered, nor any construction performed, prior to approval by Owner's Representative of Submittals applicable thereto. Construction performed in violation of this requirement will be neither approved nor certified for payment until applicable Submittals have been submitted and approved. If any equipment or materials are ordered by Contractor prior to submission and approval of Submittals, it is done at Contractor's risk.

E. The Contractor is responsible for making necessary changes to other items, which may result from deviations or changes requested by the Contractor and approved by Owner's Representative, so that all items of work satisfy the requirements and intent of Contract Documents.

F. All submittals shall be submitted in an electronic format consistent with the requirements for an electronic submittal to the EPA New England Record Center, unless otherwise approved by the Owner.

1.3 CONTRACTOR RESPONSIBILITIES

A. Review submittals prior to submission.

B. Coordinate each submittal with requirements of work and of Contract Documents.

C. Contractor's responsibility for errors and omissions in submittals is not relieved by the Owner or Owner's Representative's review of submittals.

D. Contractor's responsibility for deviations in submittals from requirements of Contract Documents is not relieved by the Owner or Owner's Representative's review of submittals, unless Owner's Representative gives written acceptance of specific deviations.

E. Notify Owner's Representative, in writing at time of submission, of deviations in submittals from requirements of Contract Documents.

F. Begin work which requires submittals after return of Owner or Owner's Representative's approval.

G. After Owner or Owner's Representative's review, maintain file copies.

H. Contractor shall create and maintain a Project Submittal Register. The register shall detail submittal type, review history, approval status, and follow up action. The register shall be provided and updated as a requirement of progress payment approval.

1.4 OWNER'S REPRESENTATIVE'S REVIEW OF SUBMITTALS

A. The Owner or Owner's Representative's review of submittals shall not be construed as a complete check, but is only for general conformance with the specifications for the project and general compliance with the information given in the Contract Documents. Review will not relieve the Contractor of the responsibility for any error which may exist, as the Contractor is responsible for dimensions, the development of adequate drawings and details, the fabrication processes, the construction methods, and the satisfactory

construction of all work.

B. Owner's Representative's review action codes are listed below.
   1. No Exceptions Taken (Code 1): Fabrication and installation may proceed.
   2. Make Corrections Noted (Code 2): Contractor shall make the changes noted, and then may proceed with fabrication or installation.
   3. Amend and Resubmit (Code 3): Contractor shall make the changes noted, and resubmit for an additional review cycle.
   4. Rejected - See Remarks (Code 4): Contractor shall make the changes noted, which may involve a complete new product submittal, and resubmit for an additional review cycle.

C. After submittals have received a review action 1 or 2 by the Owner's Representative, no resubmittal for the purpose of substituting materials or equipment will be considered unless accompanied by a detailed explanation of why a substitution is necessary.

PART 2 - PRODUCTS

Not Applicable.

PART 3 - EXECUTION

3.1 GENERAL

A. The Contractor shall make submittals as required by the individual specification sections.

B. The Owner's Representative may request submittals in addition to those specified when deemed necessary to adequately describe the work covered in the respective sections.

C. Units of weights and measures used on all submittals shall be the same as those used in the contract drawings.

D. Each submittal shall be complete and in sufficient detail to allow ready determination of compliance with contract requirements.

E. Prior to submittal, all items shall be checked and reviewed by the Contractor and each item shall be certified, signed, and dated by the Contractor. Proposed deviations from the Contract Documents shall be clearly identified.

F. Submittals shall include items such as:
   1. Manufacturer's or fabricator's drawings;
   2. Descriptive literature including (but not limited to) catalog cuts, diagrams, operating charts or curves;
   3. Test reports;
   4. Samples;
   5. O&M manuals (including parts list);
   6. Certifications;
   7. Warranties; and
   8. Other pertinent data.

G. Submittals requiring Owner's Representative review shall be scheduled and made prior to the acquisition of the material or equipment covered thereby.

H. Samples remaining upon completion of the work shall be picked up and disposed of in accordance with manufacturer's Material Safety Data Sheets (MSDS) and in compliance with existing laws and regulations.

3.2 SUBMITTAL REQUIREMENTS

A. Transmittal Form:

1. A Contractor Shop & Vendor Submittal Transmittal Form shall accompany all submittals.
2. The Transmittal shall be completed and furnished by the Contractor. Submittals shall be provided in hard copies as well as in an electronic format as specified in Section 1.2F above.
3. Transmittals shall include the following information, at a minimum:
   a. Submittal number in sequence, beginning with 1 (subsequent revised submittals shall be identified with a number and letter);
   b. Date;
   c. Project title and project number;
   d. Contractor's name and address;
   e. Identification of each item submitted;
   f. Reference to the specification number and paragraph and/or sheet number of the Contract Drawings pertinent to the data submitted.
   g. Notification of any deviations from Contract Documents;
   h. Return date required by Contractor; and
   i. Other pertinent data.

B. Contractor Certification: The Contractor's Certification that the submittal meets contract requirements shall contain the following:

1. Contractor firm name;
2. Point of contact name, signature, and title;
3. Date; and
4. Contractor's corrections as noted on submittal data and/or attached sheets(s).
5. The certification may be provided as part of the Transmittal, on a separate sheet attached to the form, or as a stamp on the submittal itself.

C. Procedures:

1. The Contractor shall schedule submissions at least 10 days before dates reviewed submittals will be needed, except where a different lead time is specified.
2. The Contractor shall deliver to Owner's Representative three copies of all submittals and Transmittals. To expedite the review of smaller submittals, the Contractor may provide a legible fax or e-mail, if followed by the required number of hard copies.
3. The Contractor shall maintain one copy of the submittal and Transmittal on site.
4. At the time of each submission, the Contractor shall call to the Owner's Representative's attention, in writing, any deviations that the submittal may have from the requirements of the Contract Documents.

D. Submittals shall include:

1. Date and revision dates;
2. Project title and number;
3. The names of:
   a. Resident or Owner's Representative;
   b. Contractor;
   c. Contractor's Contractor;
   d. Supplier;
   e. Manufacturer; and

f. Separate detailer when pertinent.

4. Identification of product or material;
5. Field dimensions, clearly identified as such;
6. Specification section number and paragraph or sheet number of the Drawings; and
7. Applicable standards, such as ASTM number or Federal Specification.
8. For submittals which include proposed deviations requested by the Contractor, "variation" shall be clearly indicated on the transmittal form. The Contractor shall state the reason for any deviations and annotate such deviations on the submittal. The Owner's Representative reserves the right to rescind inadvertent acceptance of submittals containing unnoted deviations.

E. Submittals shall be of standardized sizes.

1. Approved standard sizes shall be:
   a. 22 inches by 34 inches;
   b. 11 inches by 17 inches; and
   c. 11 inches by 8 1/2 inches.
2. Provision shall be made in preparing submittals to afford a binding margin on left hand side of sheet.
3. Submittals put forward other than as specified herein may be returned for resubmittal without being reviewed.

3.3 RESUBMITTALS

A. The Contractor shall make all corrections required by the Owner's Representative and promptly furnish a corrected submittal in the form and number of copies specified for the initial submittal. If the Contractor considers any correction indicated on a submittal to constitute a change to the Contract, a notice in accordance with the Contract shall be given promptly to the Owner and the Owner's Representative.

B. Identify as a resubmission by adding a letter suffix to the original submittal number (1A for the first resubmission of the first submittal; 1B for the second resubmission; etc.).

3.4 REVIEW OF SUBMITTALS

A. Upon completion of review of submittals, the Owner's Representative will fax or email review action and comments to the Contractor.

B. The copies of the submittal will be retained by the Owner's Representative, with review action and comments attached to each copy.

C. The Contractor will attach the Owner's Representative's review action and comments to each copy of the submittal in his possession.

3.5 DISTRIBUTION OF SUBMITTALS

A. A file of all submittals made to the Owner's Representative, reviews by the Owner's Representative, resubmittals, and final approved submittals shall be maintained by the Contractor.

B. This file or a copy of the file shall be maintained by the Contractor at the job site while work is being conducted at the site.

END OF SECTION

SECTION 01351

HEALTH AND SAFETY

PART 1 - GENERAL

1.1 DESCRIPTION

A. This Section covers the health and safety requirements to be followed for remedial construction activities at a site in the village of Harborside in the Town of Brooksville, Maine, as shown specified herein, and as shown on the drawings. The Section provides requirements for preparing and submitting a Site Health and Safety Plan (HASP). The requirements shall apply to all work performed at the site.

B. The remediation will consist of: 1) Excavation and proper off-site disposal of soil contaminated with polychlorinated biphenyls (PCBs) exceeding site-specific cleanup levels within the former Mine Operation Area; and 2) Excavation and off-site disposal of Comprehensive Environmental Response and Liability Act (CERCLA) waste commingled with petroleum-contaminated soil exceeding site-specific cleanup levels within the former Mine Operation Area; and 3) Excavation of soil containing arsenic, thallium, and lead exceeding site-specific cleanup levels in the Residential Use Area of the Site.

C. Work at the Site will include excavation and handling contaminated soil and rock materials and could potentially expose workers to the site-specific contaminants. Employees potentially exposed to the contaminated material will be required to meet the training and health monitoring requirements of OSHA 29 CFR 1910.

1.2 RELATED WORK SPECIFIED ELSEWHERE

A. Section 01010: Summary of Work

B. Section 01340: Submittal Procedures

1.3 REFERENCES

A. The publications listed below form a part of this specification to the extent referenced. The publications are referred to in the text by basic designation only.

1. CODE OF FEDERAL REGULATIONS (CFR)

a. 29 CFR 1910 Occupational Safety and Health Standards

b. 29 CFR 1926 Safety and Health Regulations for Construction.

1.4 SUBMITTALS

A. The following shall be submitted in accordance with Section 01340, Submittal Procedures:

1. HASP: The HASP shall detail the health and safety procedures to be followed during completion of the work and shall be developed in accordance with this specification. The Contractor shall periodically review the plan during work operations to keep it current and technically correct. The HASP shall include, but not be limited to, the following:

a. Activity Hazard Analyses for each task scheduled to be completed as part of the work as specific in paragraph 1.9.

b. Emergency Response Plan.

1.5 REGULATORY REQUIREMENTS

A. Work performed under this contract shall comply with applicable federal, state, and local safety and occupational health laws and regulations. This includes, but is not limited to, Occupational Safety and Health Administration (OSHA) standards, 29 CFR 1910, especially Section .120, "Hazardous Waste Site Operations and Emergency Response" and 29 CFR 1926 for specific site activities.

1.6 PRE-CONSTRUCTION CONFERENCE

A. As part of the Pre-construction Conference the Contractor, or his/her representative, the on-site construction superintendent and designated Site Safety and Health Officer (SSHO) will provide general details of the Contractor's HASP.

1. Recommended discussion topics include:

a. Discussion and review of the Contractor's accident prevention plan.

b. Review of any project or site specific health and safety requirements.

c. Review of the Contractor's list of anticipated phases of work requiring an activity hazard analysis.

d. Review of accident investigation and reporting requirements.

2. The discussions at the pre-construction safety conference shall become a matter of record and shall be included as amendments to the Contractor's accident prevention plan.

1.7 SAFETY AND HEALTH PROGRAM

A. OSHA Standards 29 CFR 1910, Section .120 (b) and 29 CFR 1926, Section .65 (b) require employers to develop and implement a written Safety and Health Program for employees involved in hazardous waste operations. The site-specific program requirements of the OSHA Standards shall be integrated into one site-specific document. The HASP shall interface with the Contractor's overall Safety and Health Program. Any portions of the overall Safety and Health Program that are referenced in the HASP shall be included as appendices to the HASP.

1.8 SITE HEALTH AND SAFETY PLAN

A. Preparation and Implementation. A HASP shall be prepared covering on-site work to be performed by the Contractor and all subcontractors. The Contractor's SSHO shall be responsible for the development, implementation and oversight of the HASP. The HASP shall establish, in detail, the protocols necessary for the anticipation, recognition, evaluation, and control of hazards associated with each phase of the work. The HASP shall address site-specific safety and health requirements and procedures based upon site-specific conditions. The level of detail provided in the HASP shall be tailored to the type of work, complexity of operations to be performed, and hazards anticipated. Details about some activities may not be available when the initial HASP is prepared and submitted. Therefore, the HASP shall address, in as much detail as possible, anticipated tasks, their related hazards and anticipated control measures. Additional details shall be included in the activity hazard analyses as described in Section 1.9 Hazard/Risk Analysis.

B. Acceptance and Modifications. Prior to submittal, the HASP shall be signed by the SSHO and the Site Superintendent. The HASP shall be submitted for review 7 days prior to execution of work at the site. On-site work shall not begin until the plan has been accepted. A copy of the written HASP shall be maintained on site. As work proceeds, the HASP shall be adapted to new situations and new conditions. Changes and modifications to the accepted HASP shall be made with the knowledge and concurrence

of the SSHO, the Contractor's Site Superintendent, and the Owner. Disregard for the provisions of this specification or the accepted HASP shall be cause for stopping of work until the matter has been resolved.

1.9 HAZARD/RISK ANALYSIS

A. The HASP shall include a safety and health hazard/risk analysis for site tasks and operations to be performed as part of the contract. The hazard/risk analysis shall provide information necessary for determining safety and health procedures, equipment, and training to protect on-site personnel, the environment, and the public. The following elements, at a minimum, shall be addressed.

1. Site Tasks and Operations (Workplan). The HASP shall summarize the tasks and objectives of the site operations of this project, and the logistics and resources required to achieve those tasks and objectives safely.

2. Hazards. The following potential hazards may be encountered during site work. They are not complete lists; therefore, they shall be expanded and/or revised as necessary during preparation of the HASP.

a. Safety Hazards. Potential safety hazards associated with the work on the Project could be related to operation of construction equipment, safety hazards associated with working near water, and safety hazards from scattered debris.

b. Chemical Hazards. Potential chemical hazards that may be encountered during Site work will be discussed in the HASP. The Hazard/Risk Analysis section of the HASP shall describe the chemical, physical, and toxicological properties of contaminants, sources and pathways of employee exposures, anticipated on-site and off-site exposure level potentials, and regulatory (including federal, state, and local) or recommended protective exposure standards. The HASP shall also address employee exposure to hazardous substances brought on site, and shall comply with the requirements of 29 CFR 1910, Section .1200 Hazard Communication and 29 CFR 1926, Section .59, Hazard Communication. A copy of the Owner's Health and Safety Plan will be provided to the Contractor to assist in determining the potential hazards/risks.

c. Physical Agents. Potential physical hazards during work on the Site could include heat stress and cold stress; noise related hazards; physical strain from heavy lifting; and slips, trips, and falls from scattered debris on the site.

d. Biological Hazards. Potential biological hazards associated with the work on the Site could include insect and animal bites and contact with poison ivy.

3. Action Levels. Action levels shall be established in the HASP for situations anticipated or potential at the site.

1.10 ACTIVITY OR JOB HAZARD ANALYSES

A. Prior to beginning work, Activity or Job Hazard Analyses (JHA) shall be prepared for each anticipated activity, by the Contractor performing that work. Analyses shall define the activities to be performed and identify the sequence of work, the specific hazards anticipated, and the control measures to be implemented to eliminate or reduce each hazard to an acceptable level. The activity hazard analyses shall be continuously reviewed and when appropriate modified to address changing site conditions or

operations, with the concurrence of the SSHO, and the Site Superintendent. Activity hazard analyses shall be attached to, and become a part of, the HASP.

1.11 STAFF ORGANIZATION, QUALIFICATIONS, AND RESPONSIBILITIES

A. An organizational structure shall be developed that sets forth lines of authority (chain of command), responsibilities, and communication procedures concerning site safety, health, and emergency response.

1.12 TRAINING

A. Personnel shall receive training in accordance with the Contractor's written safety and health training program and 29 CFR 1910 Section .120, 29 CFR 1926 Section .65, and 29 CFR 1926 Section .21.

1. Site-specific Training. Site-specific training sessions shall be documented, scheduled in advance and attendance shall be mandatory for the appropriate personnel.

a. Initial Session (Pre-entry Briefing). Prior to commencement of on-site field activities, all site employees shall attend a site-specific safety and health training session of appropriate duration. Training shall be conducted by the SSHO or other qualified individual to ensure that all personnel are familiar with requirements and responsibilities for maintaining a safe and healthful work environment

b. Periodic Sessions. Periodic on-site training shall be conducted by the SSHO as needed for new personnel assigned to work at the site or personnel assigned to new tasks during the execution of the project. The training shall address safety and health procedures, work practices, any changes in the HASP, activity hazard analyses, work tasks, or schedule; and review of safety discrepancies and accidents shall be included.

c. Daily tail-gate or general health and safety discussions pertinent to the day’s work shall be held and documented in daily Contractor field reports.

1.13 PERSONAL PROTECTIVE EQUIPMENT

A. PPE Program. In accordance with 29 CFR 1910 Section .120 (g)(5) and 29 CFR 1926 Section .65 (g)(5), a written Personal Protective Equipment (PPE) program which addresses the elements listed in that regulation, and which complies with respiratory protection program requirements of 29 CFR 1910 Section .134, is to be included in the Contractor’s Safety and Health Program. The HASP shall detail the minimum PPE ensembles (including any necessary respiratory protection) and specific materials from which the PPE components are constructed for each site-specific task and operation to be performed. On-site personnel shall be provided with appropriate personal protective equipment. Protective equipment and clothing shall be kept clean and well maintained. The PPE Section of the HASP shall include site-specific procedures to determine PPE program effectiveness and storage of PPE.

B. Levels of Protection. The SSHO shall establish appropriate levels of protection for each work activity based on review of historical site information, existing data, and an evaluation of the potential for exposure (inhalation, dermal, ingestion) during each phase of the work.

1.14 MEDICAL SURVEILLANCE

A. The Contractor’s medical surveillance program shall be detailed in the HASP.

B. A medical examination statement shall be obtained for all employees conducting work at the site similar to the one provided at the end of this specification.

1.15 DUST CONTROL

A. Dust monitoring shall consist of continual visual observation of dust generation during construction activities to ensure off-site migration of dust is not occurring. At the first observation of dust being generated, dust controls shall be implemented immediately.

B. During non-working hours, the Site shall be left in a condition that will prevent dust from being generated. The Contractor shall monitor weather reports for dry and/or windy conditions and prepare the Site accordingly, including site activity procedure revisions as necessary.

1.16 HEAT AND COLD STRESS MONITORING

A. The Site SSHO shall develop a heat stress and cold stress monitoring program for on-site activities. Schedules for work and rest, and physiological monitoring requirements, shall be described in the HASP. Details regarding the monitoring program shall be included in the HASP only as changes to the program are anticipated. Personnel shall be trained to recognize the symptoms of heat and cold stress. The SSHO and an alternate person shall be designated to be responsible for the heat and cold stress monitoring program.

1.17 SAFETY PROCEDURES, ENGINEERING CONTROLS AND WORK PRACTICES

A. The HASP shall describe the standard operating safety procedures, engineering controls and safe work practices to be implemented for the work. Possible procedures may include, but shall not be limited to, the following:

1. General Site Rules/Prohibitions,
2. Security Procedures,
3. Material Handling Procedures, and
4. Spill and Discharge Control

1.18 PERSONAL HYGENE

A. Personnel, equipment, and material entering the Site shall adhere to the personal hygiene provisions identified in the HASP. A discussion of personal hygiene and potential decontamination facilities and procedures to be followed by site workers shall be submitted as part of the HASP.

1.19 EMERGENCY EQUIPMENT AND FIRST AID REQUIREMENTS

A. The HASP shall describe the emergency and first aid equipment to be available on site, the specific locations of the equipment and identification of individuals trained in the use of such equipment who are first aid and /or CPR certified by a recognized training organization (e.g., American Red Cross).

1.20 EMERGENCY RESPONSE AND CONTINGENCY PROCEDURES

A. An Emergency Response Plan, that meets the requirements of 29 CFR 1910 Section .120 (l) and 29 CFR 1926 Section .65 (l), shall be developed and implemented as a Section of the HASP. This plan/Section shall be formatted as a stand alone document.

B. In the event of any emergency associated with remediation activities, the Contractor shall, without delay, alert all on-site employees that there is an emergency situation; take action to remove or otherwise minimize the cause of the emergency; alert the Owner and institute measures necessary to prevent repetition of the conditions or actions leading to,

or resulting in, the emergency. Employees that are required to respond to hazardous emergency situations shall be trained in how to respond to such expected emergencies.

C. The Contractor shall meet and discuss with local emergency response personnel and dispatchers of the work in progress and provide documentation of such meetings.

1.21 INSPECTIONS

A. The SSHO shall perform inspections of the jobsite and the work in progress to ensure compliance with the Safety and Health Program, and other occupational health and safety requirements of the contract. Procedures for correcting deficiencies should be included.

B. Safety inspection activity logs shall be used to document the inspections, noting safety and health deficiencies, and corrective actions taken. The SSHO's Daily Inspection Logs shall be attached to and submitted with the Daily project reporting and shall include the date, work area checked, employees present in work area, PPE and work equipment being used in each area, special safety and health issues and notes, and signature of preparer. In the event of an accident, the Owner shall be notified immediately of any reportable accident; an appropriate Accident Report shall be completed and submitted by the Contractor within 24 hours of the accident.

EMPLOYEE MEDICAL EXAMINATION STATEMENT: I have had a medical examination within the last twelve months which was paid for by my employer. The examination included: health history, pulmonary function tests and may have included an evaluation of a chest x-ray. A physician made a determination regarding my physical capacity to perform work tasks on the project while wearing protective equipment including a respirator. I was personally provided a copy and informed of the results of that examination. My employer's industrial hygienist evaluated the medical certification provided by the physician and checked the appropriate blank below. The physician determined that there:

Were no limitations to performing the required work tasks; ( )

Were identified physical limitations to performing the required work tasks. ( )

Date medical exam completed

[Employee's][Visitor's] Signature _____

Date _____

Printed Name _____

Social Security Number _____

Contractor's Site Safety and Health Officer Signature _____

Date _____

Printed Name _____

Social Security Number _____

END OF SECTION

SECTION 01450

CONSTRUCTION QUALITY ASSURANCE

PART 1 - GENERAL

1.1 DESCRIPTION

A. This Section covers quality assurance and testing procedures to be completed during Work. Prior to commencement of Work, the Contractor shall prepare a Construction Quality Assurance (CQA) Plan detailing the procedures to be followed and testing to be completed. The CQA Plan shall include a Sampling and Analysis Plan for an in-situ sampling program designed to pre-characterize and delineate horizontal and vertical extent of contamination at the Mine Operations Area and the Residential Use Area, as well as include verification sampling and analyses of completed excavations.

B. Quality assurance testing shall be executed by the Contractor as required in this specification.

C. The sampling and analysis shall be conducted in accordance with USEPA and MEDEP standards and requirements for environmental sampling and analysis.

1.2 RELATED WORK SPECIFIED ELSEWHERE

A. Section 01010: Summary of Work

B. Section 01340: Submittal Procedures

C. Section 01780: Project Record Documents

1.3 SUBMITTALS

A. Mine Operations Area - Construction Quality Assurance Plan:

1. Contractor shall prepare and submit a CQA Plan for Work to be completed within the former Mine Operations Area. The CQA plan shall identify personnel, procedures, instructions, records, and forms to be used in carrying out the requirements of this project.

2. The CQC Plan shall include the proposed field sampling plan and quality assurance project plan for in-situ pre-excavation delineation of PCB-contaminated soil. The in-situ sampling program shall be designed to delineate horizontal and vertical extent of PCB-contaminated soil based on concentrations of less than 50 mg/kg and equal to or greater than 50 mg/kg.

3. Excavated PCB-contaminated soil shall be segregated based on PCB concentrations less than 50 mg/kg and equal to or greater than 50 mg/kg and shall not be commingled. The in-situ sampling program shall also be designed to delineate the area with Comprehensive Environmental Response, Compensations, and Liability Act (CERCLA) waste contaminated soil commingled with petroleum-contaminated soil.

4. The sampling plan shall describe the sampling requirements to confirm that the remaining soil in completed excavations is equal to or less than the cleanup level threshold of 1 mg/kg for PCBs.

5. Proposed Project Analytical Laboratory and certifications, personnel qualifications, equipment, analytical methods, and sample quantitation limits.

6. No work on-site shall be permitted until comments received are adequately addressed by the Contractor and the CQA Plan is approved by the Owner.

B. Residential Use Area - Construction Quality Assurance Plan:

1. Contractor shall prepare and submit a CQA Plan for Work to be completed within the Residential Use Area. The CQA plan shall identify field sampling and quality assurance procedures for the sampling of arsenic, lead, and thallium.
2. The plan shall include the use of field measurements using portable x-ray fluorescence (XRF) techniques at each property to confirm the extent of lead above 375 mg/kg, arsenic above 14 mg/kg, and thallium above 15 mg/kg.
3. Pre-excavation sampling procedures shall be outlined for areas that showed isolated detections in the remedial investigation not originally targeted for excavation to confirm whether the background concentration for arsenic is potentially higher than 14 mg/kg.
4. The sampling plan shall describe the sampling requirements to confirm that the remaining soil in completed excavations is below the site-specific cleanup levels.
5. Proposed Project Analytical Laboratory and certifications, personnel qualifications, equipment, analytical methods, and sample quantitation limits.
6. No work on-site shall be permitted until comments received are adequately addressed by the Contractor and the CQA Plan is approved by the Owner.

C. Sampling and Analysis Reports:

1. Submit the following reports:
   a. Field sampling data records including copies of completed field sheets, chain-of-custodies, and field log book entries;
   b. Electronic and hard copy Laboratory Data Deliverable;
   c. Data Usability Summary Report including certification that a representative portion of the data has been validated by a person independent of the laboratory according to Region I, EPA – New England Data Validation Functional Guidelines for Evaluating Environmental Analyses, Revised December 1996. Validation shall be at a rate of 10% Tier 3 and 90% Tier 2 validation.

D. Following the pre-excavation in-situ sampling program, prepare and submit drawings showing the revised excavation limits for the Mine Operations Area and the Residential Use Area for approval by the Owner.

PART 2 - PRODUCTS

Not Applicable

PART 3 - EXECUTION

3.1 GENERAL REQUIREMENTS

A. The quality and design of all Work shall be the responsibility of the Contractor.

B. Perform sufficient inspections and tests of all items of work, on a continuing basis, including that of subcontractors, to ensure conformance to applicable performance based specifications with respect to the quality of materials, workmanship, construction, and functional performance.

C. Provide qualified personnel, appropriate facilities, instruments, and testing devices necessary for the performance of the quality control function.

D. Controls shall be adequate to cover all construction operations, shall be keyed to the proposed construction sequence, and shall be coordinated by the Contractor's quality assurance personnel.

3.2 CONTRACTOR QUALITY CONTROL (CQC) PLAN

A. Prepare and submit Construction Quality Assurance Plans to the Owner for approval.

B. Comments or approval from the Owner will be submitted to the Contractor within 10 calendar days following receipt of the plan. Contractor shall adequately respond to comments to the satisfaction of the Owner within 14 calendar days following receipt of any comments from the Owner.

C. No work on-site shall be permitted until the comments received are adequately addressed by the Contractor and the CQA Plan is approved by the Owner.

D. The CQA Plan, at a minimum, shall include the following:

1. A description of the Quality Assurance Organization, including charts showing lines of internal Contractor authority, and external Contractor, subcontractor, and Owner relationships. The Quality Assurance Organization shall include the names, qualifications, duties, and responsibilities of each person assigned to a quality control function. The Quality Assurance Organization chart shall identify a Contractor's Quality Assurance Manager whose responsibilities and qualifications are described in the Article entitled "Construction Quality Assurance Organization" in this Section.

2. The method for performing, documenting and enforcing quality assurance operations of both Contractor and subcontract work including sampling, inspecting, and testing.

3. Inspections as described in the article entitled, "Inspections" in this Section.

4. A list of analytical or testing laboratories to be used by the Contractor for testing required by these technical specifications.

5. Protocol describing corrective actions to be taken by the Contractor with specifically defined feedback systems. The Resident will then decide what further corrective action, if any, shall be taken by the Contractor. Personnel responsible for initiating and carrying out corrective action shall be indicated in the protocol.

E. Submit Weekly CQA Reports, Test Reports, Deficiency Reports and Project Summary as required by this specification.

3.3 NOTIFICATION OF CHANGE

A. After submittal and approval of the CQA Plan, the Owner shall be notified in writing of any proposed changes to the CQA Plan.

3.4 CONSTRUCION QUALITY ASSURANCE ORGANIZATION

A. CQA Manager:

1. Identify an individual, within the Contractor's organization at the work site, who shall be responsible for overall management of the CQA Plans and have the authority to act in all CQA matters for the Contractor.
2. The CQA Manager for this contract shall be a qualified construction manager/engineer or comparable individual with a minimum of 2 years of applicable experience, at the Project Manager, Project Engineer, Superintendent or CQA Manager level, whose responsibility is to ensure compliance with the contract specifications. The CQA Manager shall be independent of the Project Superintendent.
3. The CQA Manager shall be on-site whenever work is in progress so that he/she may be in charge of the CQA Plan for the project.
4. All submittals for approval shall be reviewed and modified or corrected as needed by the CQA Manager or authorized assistants prior to forwarding each submittal to the Owner.

3.5 PRE-EXCAVATION SOIL SAMPLE COLLECTION

A. Collect pre-excavation soil samples from the Mine Operations Area excavation areas to pre-characterize and determine excavation limits and PCB-contaminated soil stockpile segregation requirements described in Part 1.3 of this specification prior to starting excavating activities.

B. Samples shall be collected by using a small drill rig, geoprobe, hand auger, trowel, or spoon.

C. The required volume, containerization methods, and sample preservation methods shall be as directed by the Project Analytical Laboratory .

D. PCB-contaminated soil pre-characterization samples shall be collected to define the 50 mg/kg boundary with a vertical resolution of 1 foot or less and a horizontal resolution of 5 feet or less perpendicular to the 50 mg/kg boundary and 30 feet or less parallel to the 50 mg/kg boundary.

E. Residential Use Area soil pre-characterization shall be performed to define the cleanup boundary with a vertical resolution of 1 foot or less and a horizontal resolution of 5 feet or less perpendicular to the cleanup boundary and 30 feet or less parallel to the cleanup boundary. Collection of contiguous samples at 5-foot intervals along transects is not required as long as a horizontal resolution of 5 feet or less perpendicular to the cleanup boundary is achieved. Horizontal resolution perpendicular the cleanup boundary shall be confirmed with samples not more than 10 feet beyond the bounding sample.

F. The site-specific cleanup levels for Residential Use Areas are listed below:

1. Arsenic - 14 mg/kg
2. Lead - 375 mg/kg
3. Thallium - 15mg/kg

3.6 POST-EXCAVATION SOIL SAMPLE COLLECTION

A. Post-excavation soil samples shall be collected from the exposed excavation bottom and side slopes prior to backfilling.

B. Samples shall be collected by using a hand auger, trowel, or spoon to obtain the necessary volume of soil for each sample.

C. Samples shall be collected from the side slopes of the excavation at a rate of one sample per 17 linear feet of excavation sidewall taken from the mid-height of the

side wall and one sample per 289 square feet of excavation bottom.

D. The required volume, containerization methods, and sample preservation methods shall be as directed by the Project Analytical Laboratory.

E. Based on the results of the soil sampling, additional soil excavation around any failed sample location shall be conducted consisting of an additional 6 inches deep by ½ the distance from adjacent acceptable sample results.

F. The site-specific cleanup levels are listed below:

1. PCB - 1 mg/kg (Mine Operations Area)
2. Petroleum Target Compounds and Hydrocarbon Fractions (EPA-VPH) – As listed for Park User in Table 5 of Remediation Guidelines for Petroleum Contaminated Sites in Maine, effective date December 1, 2009 (Mine Operations Area)
3. Arsenic - 14 mg/kg (Residential Use Area)
4. Lead - 375 mg/kg (Residential Use Area)
5. Thallium - 15mg/kg (Residential Use Area)

3.7 LABORATORY ANALYSIS

A. Soil samples shall be analyzed by the Project Analytical Laboratory for metals using USEPA Method 3050B/6010B, for PCBs using USEPA Method 8082 (extraction 3500B/3540C), and for Volatile Petroleum Hydrocarbons and Extractable Petroleum Hydrocarbons using Massachusetts Department of Environmental Protection Hydrocarbon Fraction Analytical Methods as adopted by the Maine Department of Environmental Protection.

B. The Project Analytical Laboratory shall provide full Contract Laboratory Program (CLP) – like data deliverables, including QC summaries and all supporting raw data and log book records.

C. Contractor shall prepare a Sampling and Analysis Report.

3.8 CONSTRUCTION INSPECTIONS

A. The CQA Plan shall include the following inspections and tests:

1. The Contractor shall perform preparatory inspections prior to beginning each feature of work on any on-site construction work conducted by the Contractor or a subcontractor. Preparatory inspections for the applicable feature of work shall include:
   a. review of submittal requirements and all other Contract requirements with the performance of the work;
   b. check to assure that provisions have been made to provide required field work control testing;
   c. examine the work area to ascertain that all preliminary work has been completed;
   d. verify all field dimensions and advise the Resident of any discrepancies;
   e. perform a physical examination of materials and equipment to assure that they conform to approved shop drawings or submittal data and that all required materials and/or equipment are on hand and comply with the contract requirements.
2. Perform initial inspection as soon as work begins on a representative portion of the particular feature of work, and include examination of the quality of workmanship as well as review of control testing for compliance with project requirements.

3. Perform follow-up inspections continuously as any particular feature of work progresses to ensure compliance with Contract requirements, including control testing, until completion of that feature of work.

3.9 TESTING

A. The Contractor shall be responsible for all required testing, documentation, and corrective measures. The Contractor shall perform tests specified or required to verify that control measures are adequate to provide a product which conforms to contract requirements.

3.10 REPORTING

A. An original and two copies of all inspection and testing results shall be reported daily, weekly, and in project reports unless noted otherwise. All reports shall be prepared and signed by the CQA Manager and submitted in an electronic format consistent with the USEPA format for electronic submissions to the EPA New England Record Center. All reports shall be legible, literate, complete, and must be submitted on time.

1. Daily Submittals: Reproduce and fully execute the attached sample "CQA Report" to show all inspections, samples collected and test results and submit to the Resident on the first work day following the date covered by the report. Submit an original and two copies of this report. Complete the attached sample "CQA Test Report List" and attach to the CQA Report for submittal to the Owner.
2. Deficiency Report: Submit a report to the Owner of any problems which arise with analysis, instrument calibration or quality control within 48 hours of the occurrence. Include proposed remedial action to be taken to correct the deficiency. A list of ongoing deficiencies to be corrected will be attached to the CQA Report daily. As deficiencies are corrected they are to be acknowledged in the day's CQA Report and deleted from the list.
3. Project Summary: At the end of the construction, prepare a summary of CQA during the project. The report shall be a consolidation and summary of the CQA daily reports. Submit to the Owner.

-- END OF SECTION --

CQC REPORT

No. _____ Date

1. Contractor's name and address:

_____

_____

2. Project Title: _____

Location: _____

Contract No.: _____

3. Weather: _____

4. Description and Location of Work (include days of no work and reasons for delay):

5. Follow-up Inspections Performed. Results and Corrective Actions Taken:

SHEET 1 OF

6. Job Safety:

7. Miscellaneous Activities and Remarks (Check Appropriate Box):

A. Preparatory or initial inspection held (see attached minutes)

B. Testing Performed-See Attached Test Results and/or "CQC Test Report"

C. Outstanding Deficiencies - See Attached "List"

D. Verbal Instructions Received (or Comments)

E. Delivery of Equipment and Materials

F. Submittal Actions

G. Misc/Remarks

Use space below to describe checked items as appropriate.

8. Contractor's Verification: The above report and attachments are complete and all supplies, materials, equipment and workmanship incorporated into the work are in full compliance with the contract except as noted.

SIGNED_____ SHEET 2 OF

CQC TEST REPORT LIST

CQC REPORT NO._____SHEET ___OF _____
PROJECT TITLE:_____
LOCATION:_____

DATE:
CONTRACTOR:
CONTRACT NUMBER:

1. SPEC. PARA. OR DWG. REF.	2. TYPE OF TEST	3. DATE PERFORMED	4. RESULTS	5. REMARKS

Notes on Use of This Form: Contractor shall make up a list of tests by filling out Columns 1 and 2, allowing 3 lines for each entry. Contractor shall submit to Resident as part of the Quality Control Plan. As tests are performed the contractor will fill Columns 3, 4 and 5, including name of lab, and submit individual sheets as part of CQC report.

SECTION 01600

SITE MANAGMENT

PART 1 - GENERAL

1.1 DESCRIPTION

A. The Contractor shall furnish all labor, equipment, and materials necessary to provide for the proper on-site handling and management of materials including, but not limited to, excavated contaminated soils, borrow soils, fill materials, etc. Contractor will be responsible for preparing a Site Management Plan for both OU1 work areas: the Mine Operations Area, and the Residential Use Area. These plans shall identify site access, traffic routing, and site controls as well as proposed methods of managing equipment, materials, dust, stockpiles, and site facilities. Improvements to existing on-site haul roads and drainage upgrades in order to conduct the Work shall be the sole responsibility of the Contractor as required to safely access the various work areas and control surface drainage. No remediation activities shall occur prior to approval of Site Management Plans.

B. PCB-contaminated and commingled petroleum-contaminated soils to be excavated in the Mine Operations Area shall be direct loaded for off-site disposal or segregated and temporarily stockpiled with appropriate control measures. Stockpiling of excavated PCB-contaminated soils shall not be allowed unless Contractor prepares and submits a stockpile plan which adequately controls the potential for contamination of surrounding areas.

C. Excavation of soils from the Residential Use Area shall be directly loaded and stockpiled in the existing Tailings Impoundment area. Stockpiling excavated material on residential properties shall not be conducted. Contractor shall prepare and submit an Interim Stockpile Plan for placement of contaminated materials within the Tailings Impoundment. The plan shall include location of stockpile and proposed management activities to prevent surface run-on and runoff and prohibit any contamination of surrounding areas. The Interim Stockpile Plan shall be approved by the Owner prior to any remedial activities.

D. The Contractor shall provide a system to weigh loaded trucks for the tracking of material to be disposed of offsite. The scale location and method shall be submitted by the Contractor for Owner approval to document and verify disposal quantities. The system shall include a certified truck scale such as a portable truck scale or similar device approved by the Resident and/or Owner. A scale shall be certified and shall be calibrated in accordance with the manufacturer's recommendations. Calibration shall be made at least monthly.

1.2 RELATED WORK SPECIFIED ELSEWHERE

A. Section 01010: Summary of Work
B. Section 01340: Submittal Procedures
C. Section 01351: Health and Safety
D. Section 01450: Construction Quality Assurance
E. Section 02315: Earthwork
F. Section 02332: Off-Site Shipment and Disposal
G. Section 02370: Erosion and Sedimentation Control
H. Section 02741: Road Construction

1.3 SUBMITTALS

A. Submit to the Owner for approval the following in accordance with Section 01340, "Submittal Procedures":

1. Site Management Plan – A Site Management Plan shall be prepared for both the Mine Operations Area and the Residential Use Area. The plans shall include the means and methods for conducting the work and managing the site including but not limited to:
   a. Identifying the materials requiring management.
   b. Temporary site facilities to be used or provided.
   c. Equipment and personnel to be used.
   d. General sequencing of the Work.
   e. Excavation procedures.
   f. Proposed access and haul routes.
   g. Site controls for dust and security.
   h. The use of the Site for staging, stockpiling or other activities.
   i. Means/methods of coordinating/scheduling the work with approved Disposal Facility;
   j. Means/methods of coordinating and scheduling work with private property owners/tenants.
   k. Truck scale location and procedures for weighing and documenting offsite disposal quantities.
   l. The Site Management Plan will be prepared in coordination with other required plans: Implementation Drawings; Construction Quality Assurance Plan (includes Sampling and Analysis Plan); Off-Site Shipment and Disposal Plan; Sediment and Erosion Control Plan; Interim Stockpile Plan; Property Restoration Plan; and Site Health and Safety Plan.
2. Interim Stockpile Plan – Tailing Impoundment Area
   a. The plan shall provide a detailed design of the proposed interim stockpile within the existing Tailings Impoundment including means and methods for material placement. The implementation plan shall also provide the proposed dimensions, elevations, and footprint of the proposed stockpile. Contractor shall provide contours and cross sections of the interim stockpile as well as proposed management activities of excavated material. Contractor shall provide means/methods to allow visually segregating the interim stockpile material (i.e. fabric or snow fence demarcation layer prior to placement of excavated material, etc.) from existing tailings material to allow removal if required for future remediation activities. The contractor shall provide sufficient geotechnical analysis and information to determine the appropriate placement location and placement method for the material to be placed in the stockpile. The contractor shall also assess run-on/run-off controls and internal drainage measures to prevent unacceptable run-off from the stockpile and achieve acceptable stability criteria. The completed Interim Stockpile shall consist of a topsoil cover and seeding. Onsite topsoil material ("Stink Cove Sediment") for covering materials placed in the Tailings Impoundment is available located below Waste Rock Pile #1.

1.4 ON-SITE MANAGEMENT AND STORAGE OF MATERIALS

A. The Contractor shall be responsible for proper on-site management of debris, excavated soil and rock, and other wastes generated as part of the Work, in compliance with all Federal, State, and Local regulations and requirements.

B. The Contractor shall be responsible for movement/direction of the containers, trucks, etc. into positions required for proper loading and management of material.

C. For PCB contaminated soil, the Contractor shall provide a suitable base liner (i.e. 10-mil polyethylene sheeting) for temporary stockpiles to prevent direct contact and cross-contamination of the underlying soil. If used, the plastic sheeting shall be properly overlapped to protect against direct soil contact.

D. The Contractor shall cover any temporary PCB contaminated soil stockpiles during non-working periods at minimum with 6-mil polyethylene sheeting to prevent erosion of the stockpiles or uncontrolled runoff. The plastic sheeting shall be properly anchored.

E. Temporary stockpiles (if required) shall be located in a designated Stockpile Area, as approved by the Resident. The base of all stockpiles shall be contained by suitable sediment barriers such as siltation fence reinforced with staked straw bales.

1.5 TEMPORARY FACILITES

A. Contractor's facilities shall be of size and content for adequate administration of the contract, storage of materials required, and provision for personnel shelter.

B. Equipment required for personal safety of workmen shall be furnished in full compliance with specific safety requirements of local, state, and Federal agencies, including OSHA.

C. Required facilities include:

a. Sanitary facilities for crews conforming to local codes and OSHA requirements
b. Fire protection
c. Safety equipment
d. Temporary Site security fence

D. Other facilities that may be necessary or provided, depending on the Contractor’s approach to the work and the preference of the Contractor, include, but are not limited to:

a. Contractor’s office and storage facilities. If provided, include adequate facilities for Resident (i.e., lighting, desk, and file cabinets).
b. Yard lighting (if necessary).
c. Construction warning, protection, and control devices for maintenance and safety of vehicular and pedestrian traffic (if necessary).

E. Provide and maintain sanitary facilities in sufficient numbers, for the use of all persons employed on the work at suitable locations in accordance with State and local ordinances. Rigorously enforce the use of the provided sanitary facilities.

F. Provide sufficient drinking water for all employees from an approved source.

G. Completely remove all temporary equipment and materials upon completion of the work and repair all damage caused by the installation of temporary utilities.

1.6 MEETINGS AND DAILY REPORTS

A. Contractor shall schedule and/or attend regular meeting with the Owner and Engineer as follows:
   1. Pre-excavation kick-off meeting to review plans and schedule;
   2. Attend and provide technical support for public and property owner meetings;
   3. Weekly progress meeting to discuss work;
   4. Completion meetings for each component of work;
   5. Completion meetings for each property; and
   6. Overall completion meetings to confirm resolution of punch list items

B. Contractor shall prepare and submit daily work reports to include the following:
   1. Work completed and equipment utilized;
   2. Any unforeseen conditions or variations in the implementation plan;
   3. Personnel on site and weather conditions; and
   4. Provided photographic documentation of work progression in accordance with Section 01780, “Project Record Documents.

PART 2 - PRODUCTS

Not Applicable.

PART 3 - EXECUTION

Not Applicable.

--END OF SECTION--

SECTION 01780

PROJECT RECORD DOCUMENTS

PART 1 - GENERAL

1.1 DESCRIPTION

A. Keep accurate record documents for all additions, substitutions of material, variations in work, and any other revisions to the Contract Documents.

B. Provide pre-construction photographs of all work areas.

C. Provide pre-construction photographs and videos within the Residential Use Area to document existing conditions and restoration work.

D. Provide a final survey of project site and as-built drawings of the completed work.

1.2 RELATED WORK SPECIFIED ELSEWHERE

A. Section 01340: Submittal Procedures

B. Section 01460: Field Engineering and Survey Control

1.3 PROJECT CLOSEOUT

A. The Contractor shall comply with the procedures stated in the General Conditions of the Contract for issuance of Certificate of Substantial Completion.

B. The Contractor shall submit written certification that that the Work is complete in accordance with Contract Documents and ready for the Owner's inspection/review.

C. Provide submittals as required by these Specifications.

1.4 FINAL CLEANING

A. Execute final cleaning of Site and adjacent paved haul routes prior to final project inspection.

1. Remove all debris and provide surface restoration as required by these Specifications.
2. Clean project site areas, including sweeping all paved areas and raking landscaped surfaces.
3. Remove waste and surplus materials, rubbish, and construction facilities from the Site.

1.6 MAINTENANCE OF RECORD DOCUMENTS

A. Record documents shall be stored in a dry, safe place apart from construction documents, and be available for inspection by the Resident. The record documents shall not be used for construction purposes.

B. Clearly label each document "Project Record." During the execution of the work, keep record documents current.

C. Provide files and racks for storage of documents.

D. Maintain one copy of the following documents at the job site:

1. Drawings showing progress of work;
2. Specifications;
3. Addenda;
4. Reviewed submittals;
5. Change Orders;
6. Other modifications to the Contract;

7. Modified Project Plans: Design Drawings; Construction Quality Assurance Plan; Off-Site Shipment and Disposal Plan; Sediment and Erosion Control Plan; Site Management Plan; Interim Stockpile Plan; Property Restoration Plan; and Site Health and Safety Plan
8. Applicable permit documents;
9. Subcontractor's certifications;
10. Shop drawings and product data;
11. Daily reports, including:
    a. Records of all site work;
    b. Inspection records; and
    c. Reports on any emergency response actions.
12. Construction photographs;
13. Deficiency reports;
14. Offsite disposal documentation including manifests and load tickets.
15. All analytical and geotechnical laboratory testing data, field laboratory data, and construction materials testing reports;
16. Construction Quality Assurance Project Summary, compiled upon project completion;
17. Field notes, surveys, and records of quantities for progress payments;
18. All survey data required for measurement and payment;
19. As-Built Drawings: Legibly mark on Drawings to record actual construction including as-built final grade information.

E. Specifications and addenda shall be legibly marked up to record changes made by Change Order or Field Order, or other matters not originally specified.

1.7 SUBMITTALS

A. At the completion of field operations, the Contractor shall deliver two sets of project record documents to the Owner as a condition of final payment. Submit project record documents in accordance with Section 01340, "Submittal Procedures", and as specified herein.

B. Accompany the project record documents with a transmittal letter containing the following:
1. Date;
2. Project title and number;
3. Contractor's name and address;
4. Title and number of each record;
5. Certification that each document as submitted is complete and accurate; and
6. Signature of the Contractor or his authorized representative.

1.8 PROJECT PHOTOGRAPHS

A. Submit a key plan with notation of vantage points marked for location and direction of each photograph. Provide two prints of each photograph within seven days of taking photographs.
1. Photographs shall be smooth surface matte prints (8-inch x 10-inch) on single-weight commercial grade photographic paper mounted on linen or card stock to allow for a 1-inch wide margin. Card stock to be placed in clear plastic sleeves punched for a standard 3-ring binder.
2. On the back of each print, provide an applied label or rubber-stamped impression with the following information:
    a. Name of Project
    b. Name and address of photographer

c. Name of Owner
d. Name of Contractor
e. Date photograph was taken if not date stamped by camera
f. Description of vantage point, indicating location and direction
g. Unique sequential identifier

3. Submit complete set of photographic negatives in individually protected sleeves with labels matching photographic prints.
4. Submit complete set of digital image electronic files on DVD or CD-ROM with labels matching photographic prints.
5. Engage a professional photographer of construction projects with a minimum of three years experience.

1.9 FINAL SURVEY

A. The Contractor shall perform a topographic survey of the Site encompassing the actual limits of the Work at the completion of field operations; refer to Section 01460, "Field Engineering and Survey Control". The survey shall be performed by a Land Surveyor registered in the State of Maine. The survey shall consist of a ground control survey and shall include the following:
   1. Base map of the project site;
   2. Topographic contours shall be provided at 0.5-foot intervals;
   3. Establish appropriate horizontal and vertical control at the site (i.e., locating existing/new benchmarks) including at least two (2) permanent survey control points (x, y, z coordinates)and;
   4. The map shall contain all pertinent features within the Work areas.

B. Provide electronic files of digital mapping data on CD. Data shall be compatible with AutoCAD 2008 or later computer software.

C. Prepare and submit an Operable Unit (OU1) Remedial Action Report that complies with EPA guidance.

END OF SECTION

SECTION 02315

EARTHWORK

PART 1 - GENERAL

1.1 DESCRIPTION

A. This Section covers excavation, filling/backfilling, compaction, and grading. The work includes:

1. Excavation in PCB contaminated soil and in Comprehensive Environmental Response and Liability Act (CERCLA) waste commingled with petroleum-contaminated soil exceeding site-specific cleanup levels at the Mine Operations Area.
2. Excavation of soil containing arsenic, lead, and thallium exceeding site-specific cleanup levels within the Residential Use Area of the Site
3. Placement and compaction of granular common borrow in completed excavations for restoration activities.
4. Finish grading of all disturbed areas;
5. Laboratory testing of borrow source and existing (in-place) materials;
6. Other miscellaneous earthwork activities.
7. As directed by the Owner, conduct the optional work components including excavation of the Ore Pad, excavation and construction of sedimentation ponds, diversion swale construction for drainage run-on control above the Tailings Impoundment, stability measures for the Tailings Impoundment, and placement of excavated material in the Tailings Impoundment.

B. Control of surface water run-off during construction shall be in accordance with Section 02370, “Erosion and Sedimentation Control”, and the site-specific Erosion Control Plan to be prepared by Contractor and approved by Owner.

1.2 RELATED WORK SPECIFIED ELSEWHERE

A. Section 01330: Submittal Procedures
B. Section 02120: Off-Site Shipment and Disposal
C. Section 02370: Sediment and Erosion Control
D. Section 02741: Road Construction
E. Section 02950: Restoration

1.3 REFERENCES

The publications listed below form a part of this specification to the extent referenced. Unless otherwise noted, the latest edition of the publications shall be used. The publications are referred to within the text by the basic designation only.

A. American Society for Testing and Materials (ASTM):

1. ASTM C 136 Sieve Analysis of Fine and Coarse Aggregates;
2. ASTM D 422 Standard Test Method for Particle-Size Analysis of Soils;
3. ASTM D 698 Standard Test Methods for Laboratory Compaction Characteristics of Soil Using Standard Effort (12,400 ft-lbf/ft^3);
4. ASTM D 1140 Amount of Material in Soils Finer than the No. 200 (75-micrometer) Sieve;
5. ASTM D2487 Standard Classification of Soils for Engineering Purposes (Unified Soil Classification System);

6. ASTM D 2974 Standard Test Method for Moisture, Ash, and Organic Matter of Peat and Other Organic Soils;
7. ASTM D 3017 Standard Test Method for Water Content of Soil and Rock by Nuclear Methods (Shallow Depth);
8. ASTM D 3740 Standard Practice for Minimum Requirements for Agencies Engaged in the Testing and/or Inspection of Soil and Rock as Used in Engineering Design and Construction;
9. ASTM D 4318 Standard Test Method for Liquid Limit, Plastic Limit, and Plasticity Index of Soils;
10. ASTM D 4972 Standard Test Method for pH of Soils;
11. ASTM D 5268 Specification for Topsoil Used for Landscaping Purposes;
12. ASTM D 6938 Standard Test Methods for In-Place Density and Water Content of Soil and Soil-Aggregate by Nuclear Methods (Shallow Depth).

B. State of Maine Department of Transportation (MaineDOT):
1. MaineDOT SS Standard Specifications.

1.4 SUBMITTALS

Submit to the Owner for approval the following in accordance with Section 01340, "Submittal Procedures":

A. Borrow Source(s):
The Contractor shall provide the proposed source(s) for offsite borrow material prior to initiation of work. Available/previous laboratory testing data shall be provided. Provide a certification from the borrow source that the soil material is clean relative to the EPA Site specific cleanup levels and MEDEP residential standards.

B. Contractor Quality Control Testing Laboratory:
The name and qualifications of an independent third-party commercial testing laboratory to be used for borrow source testing and in-place soil/construction materials testing shall be submitted as soon as possible, but no later than 7 days following notice to proceed.

C. Test Reports:
Submit 4 copies of the following reports from the testing laboratory to the Resident, with copy to the Contractor:
1. All test reports for borrow source materials including grain size distribution and soil classification.
2. At least one moisture density curve for each type of borrow source material and native soil to be utilized.
3. Field in-place density (compaction) test reports.

1.5 JOB CONDITIONS:

A. Site Information:
Data provided on subsurface conditions are not intended as representations or warranties of accuracy or continuity between soil borings. It is expressly understood that the Owner is responsible for interpretations or conclusions drawn there from by Contractor. Data are made available for the convenience and information of the Contractor. Additional test borings and other exploratory operations may be made by Contractor at no cost to Owner.

B. Existing Utilities:
1. The Contractor shall locate existing underground utilities in the areas of work. If utilities are to remain in place, provide adequate means of protection during earthwork operations.

2. Do not interrupt existing utilities serving facilities occupied, except when permitted in writing by the Owner and if required, only after acceptable temporary utility services have been provided.

C. Use of Explosives:

1. Use of explosives shall not be allowed.

D. Protection of Persons and Property:

1. Barricade and mark open excavations occurring as part of this work in accordance with applicable standards.
2. Protect structures, utilities, sidewalks, pavements, and other facilities designated to remain from damage caused by settlement, lateral movement, undermining, washout, and other hazards created by earthwork operations and truck traffic.

1.6 DEFINITIONS

A. Contaminated Soil/Material:

1. Contaminated soils/materials include:
   a. PCB-contaminated soils
   b. Petroleum-contaminated soils commingled with CERCLA waste
   c. Arsenic, lead, and thallium contaminated soils
2. Unless this work has been completed prior to award of the contract, Contractor shall be required to develop and execute an in-situ pre-excavation characterization sampling and testing plan (Construction Quality Assurance Plan) to determine the actual horizontal and vertical extent of contamination for all work areas prior to the start of excavation activities.
3. Contractor shall be required to develop and execute a post excavation sampling and testing plan to confirm remaining soil/waste is below the cleanup level thresholds listed below:
   a. PCB 1 mg/kg (Mine Operations Area)
   b. Petroleum Target Compounds and Hydrocarbon Fractions (EPA & VPH) – As listed for Park User in Table 5 of Remediation Guidelines for Petroleum Contaminated Sites in Maine, effective date December 1, 2009 (Mine Operations Area)
   c. Arsenic 14 mg/kg (Residential Use Area)
   d. Lead 375 mg/kg (Residential Use Area)
   e. Thallium 15mg/kg (Residential Use Area)

B. Unsatisfactory Soil/Material:

Unsatisfactory soils/materials include but are not limited to peat and/or highly organic soils (classified as OL, OH, or PT by ASTM D 2487), stumps/brush, trash, refuse, debris, frozen soils, soils containing materials greater than the allowable size (see below), saturated soils, fine-grained soils above their liquid limit at the time of compaction, and soils which when left in place are either too wet or too dry to compact, as determined by the Resident.

C. Satisfactory Soil/Material:

Satisfactory soils/materials shall meet the requirements specified in Part 2 of this Section and shall be used to backfill excavations for restoration activities in remediated areas in the Residential Use Area or as directed by the Resident. In addition, satisfactory soils/materials shall satisfy the following conditions:

1. Satisfactory soils/materials shall be free of all Unsatisfactory Soil/Material conditions listed above;
2. Satisfactory soils from off-site borrow sources shall be free of materials greater than 6 inches in any dimension, unless otherwise specified or approved by the Resident.

3. Satisfactory soils shall not exceed 14 mg/kg arsenic, 375 mg/kg lead, thallium 15 mg/kg, 1 mg/kg PCBs, or any other constituent at a concentration, alone or in combination, that would pose an unacceptable risk to human health.

D. Cohesionless and Cohesive Soils:

Cohesionless soils include gravels, sand-gravel mixtures, sands, and gravelly-sands, classified as GW, GP, SW, or SP by the Unified Soil Classification System (ASTM D 2487). Cohesive soils include clayey gravels, sand-clay mixtures, clayey sands, clays, and silts, classified as GC, SC, CL, CH, ML, or MH by the Unified Soil Classification System (ASTM D 2487). Soils classified as GM and SM will be identified as cohesionless only when the "fines" are determined to be non-plastic. Testing required for the classification of soil shall be in accordance with ASTM D 4318, ASTM C 136, ASTM D 422, and ASTM D 1140.

E. Degree of Compaction:

Degree of compaction (percent compaction) required is expressed as a percentage of the maximum dry density, at the optimum moisture content. The maximum dry density and optimum moisture content shall be obtained by the test procedure presented in ASTM D 698.

1.7 QUALITY ASSURANCE:

A. Codes and Standards:

Perform excavation work in compliance with applicable requirements of governing authorities having jurisdiction.

1.8 PLACEMENT OF EXCAVATED MATERIALS

A. PCB-Contaminated soil and petroleum-contaminated soil commingled with CERCLA waste shall be disposed off-site in accordance with Section 02332, "Off-Site Shipment and Disposal."

B. Arsenic, lead, and thallium contaminated soils from the Residential Use Area shall be loaded and stockpiled in the existing Tailings Impoundment in accordance with the approved Interim Stockpile Plan prepared by the Contractor. The contaminated soil placement within the tailings Impoundment shall occur generally within the limits indicated on the drawings. The material shall be placed over a demarcation layer (geotextile or construction fencing) to allow material removal if required during future remediation activities. Placement of the excavated material shall occur in

C. Satisfactory Soil/Material:

1. Satisfactory clean soils/materials obtained from on-site excavations may be re-used to backfill completed excavations within the Residential Use Area as directed and approved by the Resident.
2. No Satisfactory Soil/Material shall be wasted or removed from the Site without specific written authorization from the Resident.
3. Soils/Material removed from the Mine Operation Area may not require backfill if grading can be completed to eliminate steep slopes, low points, and provide positive drainage.

PART 2 - PRODUCTS

2.1 COMMON BORROW

A. Common Borrow provided to backfill completed excavations within the Residential Use Area shall consist of a clean, reasonably well-graded granular material. It shall be of such

a nature and character that it can be compacted to the specified density or greater, with reasonable effort and length of time.

B. Common Borrow shall be free of trash, ice, snow, tree stumps, roots and excessive organic and deleterious materials.

C. Common Borrow shall not contain stones greater than 6 inches in any dimension. Oversized particles may be removed after placement as approved by the Resident.

D. Common Borrow shall contain 5% to a maximum of 35% (by weight) passing the No. 200 sieve.

E. The moisture content shall be sufficient to provide the required compaction and a stable firm surface. In no case shall the moisture content exceed 4% above optimum, which shall be determined in accordance with ASTM D 698.

2.2 AGGREGATE BASE

A. For road reconstruction, Aggregate Base material provided to backfill the top 12-inches of subgrade of completed excavations located within the road areas shall consist of a clean screened or crushed gravel of hard durable particles meeting the requirements of Type A Aggregate Base material in accordance with section 703.05 of the MaineDOT SS.

B. Aggregate Base shall be free of trash, ice, snow, tree stumps, roots and excessive organic and deleterious materials.

C. The moisture content shall be sufficient to provide the required compaction and a stable firm surface. In no case shall the moisture content exceed 4% above optimum, which shall be determined in accordance with ASTM D 698.

2.3 OFFSITE TOPSOIL - RESIDENTIAL USE AREA

A. Offsite Topsoil shall be provided as the final surficial soil in all disturbed areas to be restored by vegetation in the Residential Use Area.

B. Topsoil shall be of good quality, friable, and free of objectionable weed roots or seeds, clay lumps, sticks, trash, slag, cinders, stones larger than 1 inch in any dimension, or other extraneous material harmful to plant growth.

C. Topsoil shall be as defined in ASTM D 5268 and shall have a texture of sandy loam as defined by the USDA textural classification.

D. Topsoil shall have a minimum of 6 percent organic material content and the pH of the material is recommended to be between 6.0 and 7.6 as guidance.

E. Import topsoil or manufactured topsoil from off-site sources. Obtain topsoil displaced from naturally well-drained construction or mining sites where topsoil occurs at least 4 inches deep; do not obtain from agricultural land, bogs, or marshes.

2.4 ONSITE TOPSOIL

A. Other areas to be restored with vegetation including the Interim Stockpile and sedimentation ponds (Optional work item) may utilize onsite material for topsoil as approved and directed by the Owner.

B. Onsite topsoil material, either suitable topsoil grubbed from work areas or “Stink Cove Sediment” (available from the bench located below Waste Rock Pile #1), shall be used for covering materials placed in the Tailings Impoundment or vegetating the sedimentation ponds and drainage ditches.

2.5 BORROW SOURCE TESTING

A. Borrow source testing, including geotechnical characterization requirements, shall be conducted on all soil materials proposed for construction. Third-party geotechnical laboratory testing requirements and frequency for materials shall be as listed below.

B. Common Borrow and Aggregate Base:

Test	Methodology[1]	Frequency[2]
Particle-Size Analysis (to #200 Sieve)	ASTM D 422	1 test/1,000 cy
Modified Proctor	ASTM D 1557	1 test/1,000 cy

C. Offsite Topsoil:

Test	Methodology[1]	Frequency[2]
Particle-Size Analysis (to #200 Sieve)	ASTM D 422	1 test/source/material
pH	ASTM D 4972	1 test/source/material
Organic Content	ASTM D 2974	1 test/source/material

Notes:

1. Other testing methods may be considered acceptable, based on prior approval of the Resident.
2. Testing frequency shall be as listed, at any change in borrow source, or at any discernable change in material delivered to the site (as determined by the Resident).
3. Provide a certification from the borrow source that the soil material is clean relative to MEDEP residential standards

D. All material to be used for backfill, including common borrow, aggregate base, topsoil, and compost/mulch shall be verified to not contain arsenic exceeding 14 mg/kg, lead exceeding 375 mg/kg, or thallium exceeding 15 mg/kg. Confirmation analysis shall be provided at a rate of 1 sample per 1,000 cy.

PART 3 - EXECUTION

3.1 INSPECTION

A. Examine the areas and conditions under which excavating, filling, and grading are to be performed and notify the Resident, in writing of conditions detrimental to the proper and timely completion of the work. Do not proceed with the work until unsatisfactory conditions have been corrected in an acceptable manner.

3.2 EXCAVATION

A. General: Excavation consists of removal and offsite disposal of PCB-contaminated soil and petroleum-contaminated soils commingled with CERCLA waste within the former Mine Operations Area as well as excavation and stockpiling of contaminated soils from the Residential Use Area.

B. Optional excavation as directed by Resident during construction may include the removal of Ore Pad material within the former Mine Operations Area and stockpiling of this material within the existing Tailings Impoundment. Excavation and fill shall be performed in a manner and sequence that will provide proper drainage at all times.

C. Occupied buildings and shallow bedrock in many areas within the remediation area of the Residential Use properties will likely require some specialized soil removal techniques (hand, vacuum) to complete excavations and prevent damage to structures.

D. Excavation activities in shallow bedrock areas shall be conducted to a "clean and scraped rock surface" condition as approved by the Resident. A "clean and scraped rock surface" shall in general consist of an exposed rock surface with no significant (less than a full hand shovel) soil-filled crevices or depressions remaining.

E. Excavations shall be deemed complete based on post-excavation confirmation sampling. The Contractor shall require expedited turnaround times on sample results from the analytical laboratory to minimize open excavations within the Residential Use Area.

3.3 STABILITY OF EXCAVATIONS

A. Slope sides of excavations to comply with applicable codes and ordinances. Shore and brace where sloping is not possible because of space restrictions or stability of material excavated.

B. Maintain sides and slopes of excavations in a safe condition until completion of backfilling, or longer if specified or directed by the Resident.

C. Adjacent to resident building structures, careful excavation methods shall be conducted that prevent causing damage to foundations or the supported structure. The Contractor shall locate underground structures or utilities prior to starting excavation activities.

3.4 GRADING

A. General:

The Contractor shall uniformly grade areas within the limits of work. Smooth finish completed surfaces; grade and compact to uniform levels or slopes between points to match existing grades.

B. Finish surfaces to be free from irregular surface changes.

3.8 BACKFILL AND FILL

A. General:

Place acceptable common borrow soil material in layers to required subgrade elevations. Do not place backfill or fill material on surfaces that are muddy, frozen, or contain frost or ice.

B. Backfill excavations as promptly as work permits, but not until completion of the following:

1. Acceptance by Resident of post-excavation confirmation results.
2. Inspection, approval, and recording the limits of soil removal.
3. Removal of trash and debris.

C. Before compaction, moisten or aerate each layer as necessary to provide the optimum moisture content. Compact each layer to required percentage of maximum dry density (Part 3.9).

D. Place backfill and fill materials evenly adjacent to structures, to required elevations. Take care to prevent wedging action of backfill against structures by carrying the material uniformly around structure to approximately same elevation in each lift.

3.9 COMPACTION

A. General:

Control soil compaction during construction providing minimum percentage of density specified for each area classification.

B. Prior to backfilling, proof-roll bottom of completed excavations with compaction equipment until a firm unyielding surface is achieved. If the bottom of the excavation is unsatisfactory

material or saturated silty sand, this could be detrimental; consult the Resident as some field judgment may be necessary relative to appropriate proof-rolling effort.

C. Percentage of Maximum Density Requirements:

a. For backfilling of excavations within the Residential Use Area, compact granular backfill material at a moisture content that shall not exceed 4 percent above optimum to not less than 88% of maximum dry density for areas to be vegetated or not less than 95% of maximum dry density for roads/driveways or traffic areas. Maximum dry density shall be determined in accordance with ASTM D 698.

b. Compaction of excavated material within the Tailings Impoundment shall be conducted with spreading equipment to provide a firm unyielding surface for each layer placed, as observed and approved by the Resident. No in place compaction testing will be required.

D. Moisture Control:

1. Where a layer of soil material must be moisture conditioned before compaction, uniformly apply water to surface layer of soil material, in proper quantities to prevent free water appearing on surface during or subsequent to compaction operations.

2. Remove and replace, or scarify and air dry, soil material that is too wet to permit compaction to specified density.

3. Soil material that has been removed because it is too wet to permit compaction may be stockpiled or spread and allowed to dry. Assist drying by discing, harrowing, or pulverizing until moisture content is reduced to a satisfactory level.

3.10 TOPSOILING

A. General:

This work consists of placing Topsoil of the specified thickness on prepared subgrade in all areas disturbed by construction and not otherwise surfaced or covered by structures.

B. Material:

Provide Topsoil from offsite sources (Residential Use Area) or onsite sources , as specified in Part 2 of this Section.

C. Placing and Grading:

Place Topsoil at the locations and specified thickness. Grade and rake the Topsoil to remove all foreign material and rocks over 1 (1) inch. Compact Topsoil to minimum degree of compaction specified. Re-rake the Topsoil to provide a loose finished surface suitable to receive the specified seeding.

D. Maintenance:

Maintain the topsoiled areas until vegetation is established, as required in Section 02950, “Restoration”.

3.11 FIELD QUALITY CONTROL TESTING

A. Quality Control Testing During Construction:

1. Where required, allow testing service to examine and test backfill layers. Before further construction work is performed, compaction test results meeting the requirements of Part 3.9.C of this Section.

2. Perform field density tests in accordance with ASTM D 6938 (nuclear method), or other Resident approved methods, as applicable.

3. For each layer of backfill placed, conduct one compaction test for every 2000 square feet, but in no case less than 3 tests per lift.

4. If in opinion of Resident, based on testing service reports and inspection, backfill materials which have been placed are below specified density, provide additional compaction and testing at no additional expense to the Contractor.

3.12 MAINTENANCE

A. Protection of Graded Areas:
Protect newly graded areas from traffic and erosion. Keep free of trash and debris.

B. Repair and re-establish grades in settled, eroded, and rutted areas to specified tolerances.

C. Reconditioning Compacted Areas:
Where completed compacted areas are disturbed by subsequent construction operations or adverse weather, scarify surface, re-shape, and compact to required density prior to further construction.

END OF SECTION

SECTION 02332

OFF-SITE SHIPMENT AND DISPOSAL

PART 1 - GENERAL

1.1 DESCRIPTION

A. This Section covers the transportation and off-site disposal requirements for PCB-contaminated soils and CERCLA waste commingled with petroleum contaminated soils excavated from within the former Mine Operations Area.

B. Contaminated waste soil scheduled for off-site disposal shall be conducted by the Contractor and delivered to a facility permitted to receive such waste and approved by the Owner.

1.2 RELATED WORK SPECIFIED ELSEWHERE:

A. Section 01010: Summary of Work

B. Section 01330: Submittal Procedures

C. Section 02315: Earthwork

1.3 REFERENCES

The publications listed below form a part of this specification to the extent referenced. The publications are referred to in the text by basic designation only.

A. U.S. NATIONAL ARCHIVES AND RECORDS ADMINISTRATION (NARA)

1. 40 CFR 261 Identification and Listing of Hazardous Waste;
2. 40 CFR 264 Standards for Owners and Operators of Hazardous Waste Treatment, Storage, and Disposal Facilities;
3. 40 CFR 279 Standards for the Management of Used Oil;
4. 40 CFR 300 National Oil and Hazardous Substances Pollution Contingency Plan;
5. 40 CFR 302 Designation, Reportable Quantities, and Notification;
6. 40 CFR 761 Polychlorinated Biphenyls (PCBs) Manufacturing, Processing, Distribution in Commerce, and Use Prohibitions
7. 49 CFR 107 Hazardous Materials Program Procedures;
8. 49 CFR 172 Hazardous Materials Table, Special Provisions, Hazardous Materials Communications, Emergency Response Information, and Training Requirements;
9. 49 CFR 173 Shippers General Requirements for Shipments and Packaging; and
10. 49 CFR 178 Specifications for Packaging.

1.4 DEFINITIONS

A. Hazardous Material: A substance or material which has been determined by the Secretary of Transportation to be capable of posing an unreasonable risk to health, safety, and property when transported in commerce, and which has been so designated pursuant to the Hazardous Materials Transportation Act, 49 U.S.C. Appendix Section 1801 et seq. The term includes materials designated as hazardous materials under the provisions of 49 CFR 172, Sections .101 and .102 and materials which meet the defining criteria for hazard classes and divisions in 49 CFR 173. EPA designated hazardous wastes are also hazardous materials.

B. Hazardous Waste: A waste which meets criteria established in RCRA or specified by the EPA in 40 CFR 261 or which has been designated as hazardous by a RCRA authorized state program.

1.5 SUBMITTALS

A. An Off-Site Shipment and Disposal Plan shall be submitted for approval in accordance with Section 01340, "Submittal Procedures". At a minimum, the Off-Site Shipment and Disposal Plan shall include:

1. Proposed Disposal Facilities. The Contractor shall provide a list of pre-screened facilities that are acceptable for disposal of PCB-contaminated soil and petroleum–contaminated soil commingled with CERCLA waste. The Owner has the right to approve or reject the Contractors' proposed disposal facilities.
2. Identification of the shipment and disposal requirements of the PCB contaminated soil at the concentrations detected at the Site.
3. The name of the Contractor's Transportation and Disposal Coordinator and his/her qualifications.
4. Recordkeeping: Information necessary to file state annual or EPA reports for all hazardous waste transported, treated, stored, or disposed of under this contract. The Contractor shall not forward these data directly to the regulatory agency but to the Owner at the specified time. The submittal shall contain all the information necessary for filing of the formal reports in the form and format required by the governing federal or state regulatory agency. A cover letter shall accompany the data to include the contract number, Contractor name, and project location.
5. Spill Response: In the event of a spill or release of a hazardous substance (as designated in 40 CFR 302), or pollutant or contaminant, or oil (as governed by the Oil Pollution Act (OPA), 33 U.S.C. 2701 et seq.), the Contractor shall notify the Resident immediately. If the spill exceeds a reporting threshold, the Contractor shall follow the pre-established procedures for immediate reporting to the Owner.
6. Evidence of Licensed Transporters: License information for all transporters of waste shall be submitted.
7. Qualifications: Copies of the current certificates of registration issued to the Contractor and/or subcontractors or written statements certifying exemption from these requirements shall be submitted.
8. Shipping Documents and Packaging Certification: All transportation related shipping documents shall be submitted to the Owner, including draft bill of ladings, lists of corresponding proposed labels, packages, marks, and placards to be used for shipment, and any supporting waste analysis documents, for review a minimum of five days prior to anticipated pickup. Packaging assurances shall be furnished prior to transporting hazardous material. Bill of ladings and any supporting waste analysis documents shall be furnished when shipments are originated. "Receipt copies" of waste shipment records at the designated disposal facility shall be furnished not later than 35 days after acceptance of the shipment.
9. Notification of Potential Hazardous Waste: The Contractor shall immediately notify the Resident should any wastes be generated that the Contractor believes may be a hazardous waste as defined in 40 CFR 261.

1.6 QUALIFICATIONS

A. Transportation and Disposal Coordinator: The Contractor shall designate, by position and title, one person to act as the Transportation and Disposal Coordinator (TDC) for this

contract. The TDC shall serve as the single point of contact for all environmental regulatory matters and shall have overall responsibility for total environmental compliance at the site including, but not limited to, accurate identification and classification of hazardous materials; determination of proper shipping names; identification of marking, labeling, packaging and placarding requirements; completion of waste profiles, bills of lading, and all other environmental documentation. The TDC shall have, at a minimum, one year of specialized experience in the management and transportation of hazardous materials.

B. Training: The Contractor's hazardous materials employees shall be trained, tested, and certified to safely and effectively carry out their assigned duties. The Contractor's employees transporting hazardous materials or preparing hazardous materials for transportation shall be trained, tested, and certified in accordance with 49 CFR 172.

C. Certification: The Contractor and/or subcontractors transporting hazardous materials shall possess a current certificate of registration issued by the Research and Special Programs Administration (RSPA), U.S. Department of Transportation, when required by 49 CFR 107, Subpart G.

1.7 LAWS AND REGULATIONS REQUIREMENTS

A. Work shall meet or exceed the minimum requirements established by federal, State, and local laws and regulations which are applicable. These requirements are amended frequently and the Contractor shall be responsible for complying with amendments as they become effective. In the event that compliance exceeds the scope of work or conflicts with specific requirements of the contract, the Contractor shall notify the Resident immediately.

PART 2 - PRODUCTS

2.1 MATERIALS

A. The Contractor shall provide all of the materials required for the packaging, labeling, marking, placarding, and transportation of wastes in accordance with all applicable Federal, State, and local requirements.

B. Wastes that are determined to be Hazardous Materials shall be packaged, labeled, marked, and placarded in conformance with Department of Transportation standards. Details listed below in this specification shall not be construed as establishing the limits of the Subcontractor's responsibility.

1. Packaging: The Contractor shall provide bulk containers for packaging hazardous materials consistent with the authorizations referenced in the Hazardous Materials Table in 49 CFR 172, Section .101, Column 8. Bulk and non-bulk packaging shall meet the corresponding specifications in 49 CFR 173 referenced in the Hazardous Materials Table, 49 CFR 172, Section .101. Each packaging shall conform to the general packaging requirements of Subpart B of 49 CFR 173, to the requirements of 49 CFR 178 at the specified packing group performance level, to the requirements of special provisions of column 7 of the Hazardous Materials Table in 49 CFR 172, Section .101, and shall be compatible with the material to be packaged. The Contractor shall also provide other packaging related materials such as materials used to cushion or fill voids in over packed containers, etc. Sorbent materials shall not be capable of reacting dangerously with, being decomposed by, or being ignited by the hazardous materials being packaged. Additionally, sorbents used to treat free liquids to be

disposed of in landfills shall be non-biodegradable as specified in 40 CFR 264, Section 314.

2. Markings: The Contractor shall provide markings for each hazardous material package, freight container, and transport vehicle consistent with the requirements of 49 CFR 172, Subpart D. Markings shall be capable of withstanding, without deterioration or substantial color change, a 180-day exposure to conditions reasonably expected to be encountered during container storage and transportation.
3. Labeling: The Contractor shall provide primary and subsidiary labels for hazardous materials consistent with the requirements in the Hazardous Materials Table in 49 CFR 172, Section .101, Column 6. Labels shall meet design specifications required by 49 CFR 172, Subpart E including size, shape, color, printing, and symbol requirements. Labels shall be durable and weather resistant and capable of withstanding, without deterioration or substantial color change, a 180 day exposure to conditions reasonably expected to be encountered during container storage and transportation.
4. Placards: For each off-site shipment of hazardous material, the Contractor shall provide primary and subsidiary placards consistent with the requirements of 49 CFR 172, Subpart F. Placards shall be provided for each side and each end of bulk packaging, freight containers, transport vehicles, and rail cars requiring such placarding. Placards may be plastic, metal, or other material capable of withstanding, without deterioration, a 30-day exposure to open weather conditions and shall meet design requirements specified in 49 CFR 172, Subpart F.

C. Spill Response Materials: The Contractor shall provide spill response materials including, but not limited to, containers, adsorbents, shovels, booms, and personal protective equipment. Spill response materials shall be available at all times in which hazardous materials are being handled or transported. Spill response materials shall be compatible with the type of material being handled.

2.2 EQUIPMENT AND TOOLS

A. The Contractor shall provide miscellaneous equipment and tools necessary to handle hazardous materials in a safe and environmentally sound manner.

PART 3 - EXECUTION

3.1 TREATMENT/DISPOSAL FACILITY

A. Shipments of PCB-contaminated soil, petroleum–contaminated soil commingled with CERCLA waste, and any other potential contaminated or hazardous materials shall be sent to a licensed and Owner approved facility. The Contractor shall submit the proposed facility for each waste category including the following information:

1. Name;
2. Location;
3. Ownership;
4. USEPA identification number;
5. State identification number;
6. Permitting/licensing information;
7. Telephone number; and

8. A letter from the EPA region in which the facility(s) are located stating that facility(s) are in full compliance with Resource Conservation and Recovery Act (RCRA) or other applicable federal of state requirements.

B. Disposal of PCB contaminated soil shall be in accordance with the requirements of 40 CFR 761.

3.2 SHIPPING REQUIREMENTS

A. The Contractor, in consultation with the Resident and disposal facility, shall evaluate, prior to shipment of any material off-site, whether the material is regulated as a hazardous material. This shall be done for the purpose of determining proper shipping descriptions, marking requirements, etc., as described below.

1. Identification of Proper Shipping Names: The Contractor shall use 49 CFR 172, Section .101 to identify proper shipping names for each hazardous material to be shipped off-site. Proper shipping names shall be submitted to the Resident in the form of draft shipping documents for review and approval.
2. Packaging, Labeling, and Marking: The Contractor shall package, label, and mark hazardous materials using the specified materials and in accordance with the referenced authorizations.
3. Shipping Documents: The Contractor shall ensure that each shipment of waste sent off-site is accompanied by properly completed shipping documents. The Contractor shall prepare at a minimum a bill of lading for each shipment of waste. The bill of lading shall satisfy the requirements of 49 CFR 172, Subpart C, and any applicable state or local law or regulation, and shall be submitted to the Resident for review and approval. For laboratory samples or treatability study samples, the Contractor shall prepare bills of lading and other documentation as necessary to satisfy the regulations including any sample exclusions that may apply. Bills of lading requiring shipper's certifications shall be signed by the Contractor.

B. At a minimum, bills of lading shall be prepared for all shipments even if the waste is not considered a hazardous material.

C. Transportation shall comply with all applicable requirements in the Department of Transportation referenced regulations in the 49 CFR series.

D. All bills of lading, manifests and other documentation shall be provided for all waste disposal shipments and correlated with certified weight tickets from the disposal facility employed. The Contractor shall provide all documents to the Resident with an accurate waste tracking report in spreadsheet format including disposal dates, disposal tracking numbers, certified weights, cumulative weights, waste description, and disposal facility. The disposal facility shall provide a written certification that all waste material has been disposed in accordance with specified and regulatory and facility permit requirements.

3.3 SPILL RESPONSE

A. The Contractor shall respond to any spill of hazardous material or hazardous waste which is in the custody or care of the Contractor, pursuant to this contract. Any direction from the Resident concerning a spill or release shall not be considered a change under the contract. The Contractor shall comply with all applicable requirements of Federal, state, or local laws or regulations regarding any spill incident.

3.4 EMERGENCY CONTACTS

A. The Contractor shall be responsible for complying with the emergency contact provisions in 49 CFR 172, Section .604. Whenever the Contractor ships hazardous materials, the Subcontractor shall provide a 24-hour emergency response contact and phone number of a person knowledgeable about the hazardous materials being shipped and who has comprehensive emergency response and incident mitigation information for that material, or has immediate access to a person who possesses such knowledge and information. The phone must be monitored on a 24-hour basis at all times when the hazardous materials are in transportation, including during storage incidental to transportation. The Contractor shall ensure that information regarding this emergency contact and phone number are placed on all hazardous material shipping documents.

END OF SECTION

SECTION 02370

SEDIMENT AND EROSION CONTROL

PART 1 - GENERAL

1.1 DESCRIPTION

A. Prepare and submit for approval an Erosion and Sediment Control Plan that provides the best management practices (BMPs) based on federal and State of Maine regulations, polices, guidance, and standards that will be implemented to minimize erosion, control stormwater, and otherwise manage disturbed areas during the remediation activities. The Erosion and Sediment Control Plan shall include appropriate BMPs for all aspects of the work, including the Residential Use Area, Mine Operations Area, as well as the optional work components described in Section 01010, "Summary of Work" and as shown on the drawings.

B. Provide materials, equipment, and labor necessary for the installation, inspection, and maintenance of silt and erosion control structures as specified herein or as required to protect surface waters throughout the Project.

C. At the completion of the remedial construction, provide materials, equipment, and labor necessary for the removal, transport, and disposal of silt, sediment, and erosion control structures not specified to remain. Remove, transport, and dispose of silt and sediment resulting from erosion control measures collected from disturbed areas by means consistent with the overall intent of this specification and which do not result in additional erosion.

1.2 RELATED WORK SPECIFIED ELSEWHERE

A. Section 01010: Summary of Work

B. Section 01340: Submittal Procedures

C. Section 02315: Earthwork

D. Section 02950: Restoration

1.3 SEDIMENT CONTROL GUIDELINES

A. "Maine Erosion and Sediment Control BMPs" Bureau of Land and Water Quality, Maine Department of Environmental Protection (MEDEP), March 2003.

B. *Standard Specifications* (SS), State of Maine Department of Transportation (MaineDOT), December 2002.

1.4 SEDIMENT AND EROSION CONTROL PLAN

A. The construction activities for this project require compliance with the "Maine Erosion and Sediment Control BMPs", Maine Department of Environmental Protection, March 2003. Erosion and sediment control measures and procedures shall be in compliance with these standards and the requirements of the local soil conservation district (Hancock County).

B. The Contractor shall prepare and submit a draft Erosion Control Plan to the Owner for review. A final Erosion Control Plan shall be submitted prior to commencing remediation activities in accordance with these requirements.

C. The Contractor shall notify the Owner one week prior to the pre-construction conference, one week prior to the commencement of land disturbing activity, and one week prior to the final inspection.

1.5 REVIEW AND/OR INSPECTION OF SEDIMENTATION CONTROL MEASURES

A. Construction under this project may be subject to review and/or inspection by the appropriate local, State, and Federal agencies responsible for ensuring the adequacy of sedimentation control measures.

B. Daily statements of erosion and sediment control inspections shall be provided in the Contractor's daily field reports.

PART 2 - PRODUCTS

2.1 MATERIALS

A. Mulch:

1. Late cut, matured, and cured hay or straw that is free from primary noxious weed seeds and rough or woody materials meeting the requirements of MaineDOT SS Subsection 717.04.a.
2. Cellulose fiber mulch shall consist of elongated wood fibers from virgin or recycled sources and post consumer newsprint meeting the requirements of MaineDOT SS Subsection 717.04.b.
3. Bark mulch shall consist of soft wood bark fragments that have been aged for at least 6 months and meeting the requirements of MaineDOT SS Subsection 717.04.c.
4. Erosion Control Mix shall be an organic substance of source separated materials, separated at the point of waste generation, and may include: forest residues, bark, paper mill flume grit, stump grindings, and aged wood waste meeting the requirements of MaineDOT SS Subsection 717.04.d.

B. Mulch Binder: Mulch binder shall consist of commercially developed products for tacking of hay or straw. Binder shall be free of refuse, physical contaminants, materials toxic to plant growth, and asphalt and shall meet the requirements of MaineDOT SS subsection 717.05.

C. Seed for Erosion Control:

1. Temporary Control:

   Temporary seed mixes shall be in accordance with MEDEP guidelines based on seeding dates:

   a. April 1 to July 1 – Use Oats or Annual Rye Grass;
   b. May 15 to August 15 – Use Sudan grass;
   c. August 15 to September 15 – Use Perennial Rye Grass or Oats;
   d. August 15 to October 1 – Use Winter Rye; and
   e. October 1 to April 1 – Use Temporary mulch with dormant seeding.
2. Permanent Control: Refer to Section 02950, "Restoration".

D. Hay Bales: Hay bales shall consist of rectangular-shaped bales of hay or straw weighing approximately 40 pounds per bale and shall be free from primary noxious weed seeds and rough or woody materials.

E. Silt Fence:

1. Silt fence shall consist of Envirofence, as manufactured by Mirafi Inc., (or an approved equal) having an equivalent opening size of 30 (or an approved equal).
2. At critical locations, or as indicated or directed by the Resident, provide hog or chicken wire reinforcing with 6-inch or smaller openings or provide an approved integral silt fence and plastic mesh reinforcing, as necessary.

F. Permanent Seeding: Refer to Section 02950, "Restoration".

G. Temporary Erosion Control Blankets (ECB):

a. Temporary ECBs shall be used for the protection of newly seeded and/or disturbed soils and may be used as a substitute for temporary soil protection and for mulch for seed. Following placement of topsoil and seeding, temporary ECBs may be installed on disturbed soils where slopes are 4:1 or steeper, in constructed swales or ditches or as required to prevent erosion and allow vegetation to become established.

b. Temporary ECBs shall be 100% biodegradable or photodegradable within two years but without substantial degradation over the period of intended usage (8 months maximum).

H. Silt Curtain:

1. The floating silt curtain shall consist of a barrier curtain, a flotation system, and an anchorage system. It shall be installed in the locations were work is conducted at the edge of surface waters to mitigate the migration of sediment resulting from the work to downstream areas outside of the work area.

2. The barrier curtain material shall consist of 10-mil polyethylene sheeting or a PVC or urethane coated polyester. A tension member consisting of a galvanized or stainless steel wire rope or nylon rope shall be installed in a top reinforced pocket sewn into the barrier curtain. The barrier curtain shall be a minimum of 24 inches deep and shall not extend to the bottom of the water body.

3. The floatation system shall be comprised of two floats one attached to each side of the barrier curtain. The floats shall be located at a maximum 5-foot interval along the barrier curtain. An alternate floatation system may consist of a continuous close-cell foam tube.

4. The anchorage system shall consist of anchor lines, anchor weights, and anchors. The system shall maintain the location of the barrier curtain under predicted flow conditions. The system shall be of the appropriate size and strength to absorb the stresses induced by the hydrodynamic forces (currents, waves, etc.) and forces due to the wind. The system should allow for easy deployment and retrieval of the barrier curtain.

a. Anchor lines shall hold the silt curtain in its deployed location and configuration. The anchor lines shall be a minimum ¼-inch nylon or manila rope or a suitable steel cable.

b. Anchor weights of a suitable size and weight shall be set along the river bottom a minimum of 12 inches below the barrier at 10-foot intervals. Alternately, a ballast system comprised of a continuous ballast chain installed in a reinforced pocket sewn into the bottom of the barrier curtain may be used.

c. Anchors to connect the tensioning member of the turbidity curtain to the bank shall consist of steel rods or helical soil anchors with a minimum pull out and lateral load capacity as required to securely connect the turbidity curtain to the shoreline.

PART 3 - EXECUTION

3.1 PERFORMANCE

A. General:

1. The Contractor shall implement and maintain erosion and sedimentation control measures which effectively prevent accelerated erosion and sedimentation.
2. Earthmoving activities shall be conducted in such a manner as to prevent accelerated erosion and sedimentation.
3. Land disturbance shall be kept to a minimum.
4. The erosion and sediment control measures shall be constructed in accordance with the approved Drawings and Erosion Control Plan prepared by Contractor.
5. Temporary erosion and sediment control measures shall be installed as the first step in construction, shall be continuously maintained, and shall not be removed until permanent cover is completely established and stabilized.
6. Removal of temporary erosion and sediment control measures requires the approval of the Resident, at a minimum.
7. The following work areas will require erosion and sediment control measures:
   a. Perimeter of excavations or disturbed areas;
   b. Landscaped areas; and
   c. Temporary stockpile areas.
8. Furnish and place silt fence, and hay bales as temporary erosion and sedimentation control devices at locations as shown on the Drawings or as conditions warrant to control erosion.
9. Erosion control measures shall be employed to protect the site within the limit of work and any adjacent surface waters, drainage ways, or wetland.
10. Permanent erosion control measures shall be installed within 2 days of completion of finish grading activities. Areas to be completed with a vegetative cover shall be seeded and mulched.

B. Diverting Surface Water:
1. Build, maintain, and operate berms, channels, flumes, sumps, and other temporary diversion and protection works needed to divert surface water through or around the construction site and away from the construction work while construction is in progress.
2. Storm runoff from disturbed areas must discharge through temporary erosion control measures prior to discharge into a natural drainage way.

C. Erosion Control Provisions (as necessary):
1. Protect areas where existing banks are to be disturbed by constructing straw/hay bale or earth dikes at the top of slope to divert storm runoff from the disturbed area or at the toe of the slope to retain sediments, as conditions permit.
2. Contain discharge from any necessary pumping operations during dewatering operations with a dike constructed to prevent siltation of down gradient areas. Protect the discharge pipe outlet area against erosion by flowing water through a rock or timber apron.
4. Prior to removal of sediment barriers, remove retained silt or other materials at no additional cost to the contract.

D. Mulch: Hay or straw mulch shall be placed loosely approximately 3 inches deep or at the rate of 70 to 90 pounds per 1000 square feet.

E. Seed for Erosion Control:
1. Temporary Seeding: Minimum application rate shall be in accordance with MEDEP requirements for seed mix used (based on seeding dates):
   a. Winter Rye – 112 pounds/acre;
   b. Oats – 80 pounds\acre; and
   c. Ryegrass and Sudan grass – 40 pounds/acre.

2. Limestone: Apply limestone based on soil test results. When testing is not provided, apply at a minimum rate of 2 tons per acre.
3. Fertilizer: Apply fertilizer based on nutrient analysis. When testing is not provided, apply at a minimum rate of 500 pounds per acre.
4. Permanent Seeding: Refer to Section 02950, “Restoration”.

F. Silt Fence: Install per manufacturer's requirements, and in locations shown on the Drawings or as directed by the Resident.

G. Hay bales for Erosion Control:
1. Place as shown on Drawings or as conditions change and additional controls are needed to provide for temporary control of erosion or pollution or both.
2. Stake bales with the required stakes.

H. Other Sediment Barriers: Sediment barriers constructed from berms of erosion control mix, compost/bark, or compost-filled filter socks maybe used at locations suitable for their use and as approved by the Resident.

3.2 MAINTENANCE

A. General
1. Erosion and sediment control activities shall be conducted in accordance with the approved Erosion Control Plan prepared by the Contractor.
2. Erosion and sedimentation control measures shall be inspected by the Contractor on a daily basis, immediately prior to forecasted precipitation events, and at least twice daily during prolonged rainfall events. Inspection, repair, and/or maintenance of erosion and sedimentation control measures will be made after significant rainfall events and documentation of site conditions and necessary repairs shall be recorded in daily reports.
3. Maintain the integrity of erosion control measures throughout construction period, including during any shut-down period.
4. All access roads shall be maintained during construction in a smooth and passable condition. Rutting, potholes, displacement of gravel and ditching for drainage shall be created and maintained in a manner acceptable to the Resident.

END OF SECTION

SECTION 02741

ROAD CONSTRUCTION

PART 1 - GENERAL

1.01 DESCRIPTION

Provide hot-mix asphalt paving and/or gravel road base according to materials, workmanship, and other applicable requirements of State of Maine, Department of Transportation, Standard Specifications, Revision of December 2002, hereafter designated as MaineDOT Specifications.

1.02 RELATED WORK SPECIFIED ELSEWHERE

A. Section 01330: Submittal Procedures
B. Section 02315: Earthwork

1.03 REFERENCES

The publications listed below form a part of this specification to the extent referenced. Unless otherwise noted, the latest edition of the publications shall be used. The publications are referred to within the text by the basic designation only.

AMERICAN ASSOCIATION OF STATE HIGHWAY AND TRANSPORTATION OFFICIALS (AASHTO)

AASHTO M248	Standard Specification for Ready-Mixed White and Yellow Traffic Paints, Single User Digital Publication

AMERICAN SOCIETY FOR TESTING AND MATERIALS (ASTM)

ASTM D 1557	Standard Test Methods for Laboratory Compaction Characteristics of Soil Using Modified Effort (56,000 ft-lbf/ft^3)
ASTM D 3549	Standard Test Method for Thickness or Height of Compacted Bituminous Mixture Specimens

STATE of MAINE DEPARTMENT of TRANSPORTATION (MaineDOT)

MaineDOT SS	Standard Specifications.

1.04 SUBMITTALS

Submit to the Owner's Representative for approval the following in accordance with Section 01330, "Submittal Procedures":

A. Product Data: For each type of product indicated. Include technical data and tested physical and performance properties.

B. Job-Mix Designs: Provide the Owner's Representative with a job mix formula for each course used in the work.
C. Qualification Data: For manufacturer and testing laboratory.
D. Material Test Reports: For each paving material.
E. Field Quality Control test results
E. Borrow source test results for Aggregate Base and Subbase soil materials – see Section 02315, 'Earthwork".

1.05 QUALITY CONTROL
A. Manufacturer Qualifications: Manufacturer shall be a paving-mix manufacturer regularly engaged in production of hot-mix, hot-laid bituminous pavement.
B. Qualifications of Testing Agency: Use only recognized commercial testing laboratories with not less than 5 years experience in conducting tests and evaluations of bituminous concrete materials and design.

1.06 DELIVERY, STORAGE, AND HANDLING
A. Deliver pavement-marking materials to Project site in original packages with seals unbroken and bearing manufacturer's labels containing brand name and type of material, date of manufacture, and directions for storage.
B. Store pavement-marking materials in a clean, dry, protected location within temperature range required by manufacturer. Protect stored materials from direct sunlight.

1.07 PROJECT CONDITIONS
A. Environmental Limitations: Do not apply asphalt materials if subgrade is wet or excessively damp or if the following conditions are not met:
B. Pavement-Marking Paint: Proceed with pavement marking only on clean, dry surfaces and at a minimum ambient or surface temperature of 40 deg F for oil-based materials, 50 deg F for water-based materials, and not exceeding 95 deg F.

PART 2 - PRODUCTS

2.01 AGGREGATES
A. Pavement Aggregate. Conform to Section 703 of MaineDOT Specifications.

2.02 ASPHALT MATERIALS
A. Asphalt Binder: Conform to Section 702.01 of MaineDOT Specifications

2.03 PAVEMENT MARKING PAINT
A. Pavement-Marking Paint: Paint for final marking shall meet the requirements of MaineDOT SS Section 708.03 and AASHTO M248. Use Type F, fast dry.
1. Colors: White and Yellow.

2.04 MIXES
A. Hot-Mix Asphalt: Dense, hot-laid, hot-mix asphalt plant mixes in accordance with MaineDOT specifications as follows:
1. Provide mixes with a history of satisfactory performance in geographical area where Project is located.

2. Base Course: MaineDOT Type 12.5 mm.
3. Surface Course: MaineDOT Type 9.5 mm.

2.05 AGGREGATE BASE

A. Aggregate Base shall be provided beneath hot-mix asphalt paved streets and sidewalks as shown on the Drawings.

B. Aggregate Base shall consist of Type A aggregate for base as specified in the MaineDOT Standard Specifications, Section 703.06a.

C. Aggregate Base shall be free of trash, ice, snow, tree stumps, roots and excessive organic and deleterious materials.

D. The moisture content shall be sufficient to provide the required compaction and a stable firm surface. In no case shall the moisture content exceed 4% above optimum, which shall be determined in accordance with ASTM D 1557.

2.06 AGGREGATE SUBBASE

A. Aggregate Subbase shall be provided beneath aggregate base in hot-mix asphalt paved parking areas and accesses as shown on the Drawings.

B. Aggregate Subbase shall consist of Type D aggregate for subbase as specified in the MaineDOT Standard Specifications, Section 703.06b.

C. Aggregate Subbase shall be free of trash, ice, snow, tree stumps, roots and excessive organic and deleterious materials.

D. The moisture content shall be sufficient to provide the required compaction and a stable firm surface. In no case shall the moisture content exceed 4% above optimum, which shall be determined in accordance with ASTM D 1557.

2.07 SIGNING

A. Street signing shall conform to the Manual on Uniform Traffic Control Devices (MUTCD), 2003 edition or later and in accordance with MaineDOT SS Section 645, Type I or Type II regulatory or warning signs, consisting of engineering grade reflective sheeting letter, numeral, symbols, and border on an engineering grade reflective sheeting background adhered to a sheet aluminum sign panel with steel support posts.

B. Shape, size, text, and construction of signs shall be in conformance with MUTCD standards.

PART 3 - EXECUTION

3.01 AGGREGATE SUBBASE AND BASE

A. Aggregate subbase and base shall be placed and compacted in accordance with Section 02315, “Earthwork”.

3.02 PAVEMENT INSTALLATION

A. Plant Mix Hot Bituminous Pavement: Produce and place in conformance with Section 401 of MaineDOT Specifications.

3.03 PATCHING

A. Hot-Mix Asphalt Pavement: Saw cut perimeter of patch and excavate existing pavement section to sound base. Excavate rectangular or trapezoidal patches, extending 12 inches into adjacent sound pavement, unless otherwise indicated. Cut excavation faces vertically. Remove excavated material. Recompact existing unbound-aggregate base course to form new subgrade.

B. Tack Coat: Apply uniformly to vertical surfaces abutting or projecting into new, hot-mix asphalt paving at a rate of 0.05 to 0.15 gal./sq. yd.

1. Allow tack coat to cure undisturbed before applying hot-mix asphalt paving.
2. Avoid smearing or staining adjoining surfaces, appurtenances, and surroundings. Remove spillages and clean affected surfaces.

C. Patching: Partially fill excavated pavements with hot-mix asphalt base mix and, while still hot, compact. Cover asphalt base course with compacted, hot-mix surface layer finished flush with adjacent surfaces.

3.04 ASPHALT INSTALLATION TOLERANCES

A. Thickness: Compact each course to produce the thickness indicated within the following tolerances:

1. Base Course: Plus ½ inch or minus ¼ inch.
2. Surface Course: Plus ¼ inch, no minus.

B. Surface Smoothness: Compact each course to produce a surface smoothness within the following tolerances as determined by using a 10-foot straightedge applied transversely or longitudinally to paved areas:

1. Base Course: ¼ inch.
2. Surface Course: ¼ inch.

3.05 PAVEMENT MARKING

A. Do not apply pavement-marking paint until layout, colors, and placement have been verified with Owner’s Representative.

B. Allow paving to age for 30 days before starting pavement marking.

C. Sweep and clean surface to eliminate loose material and dust.

D. Apply paint with mechanical equipment to produce pavement markings, of dimensions indicated, with uniform, straight edges. Apply at manufacturer's recommended rates to provide a minimum wet film thickness of 15 mils.

3.06 FIELD QUALITY CONTROL

A. Testing Agency: The Subcontractor will engage a qualified independent testing and inspecting agency to perform field tests and inspections for hot-mix asphalt placement and to prepare test reports.

1. Testing agency will conduct and interpret tests and state in each report whether tested hot-mix asphalt complies with or deviates from specified requirements.
2. Thickness: In-place compacted thickness of hot-mix asphalt courses will be determined according to ASTM D 3549.
3. Surface Smoothness: Finished surface of each hot-mix asphalt course will be tested for compliance with smoothness tolerances.

4. In-Place Density: Testing agency will take samples of uncompacted paving mixtures and compacted pavement in accordance with the Method A&B quality control requirements of MaineDOT specification 4.01.

B. Remove and replace or install additional hot-mix asphalt where test results or measurements indicate that it does not comply with specified requirements.

3.07 DISPOSAL

A. Except for material indicated to be recycled, remove excavated materials from Project site and legally dispose of them in accordance with Section 02332, "Off-site Shipment and Disposal"

END OF SECTION

SECTION 02950

RESTORATION

PART 1 – GENERAL

1.1 DESCRIPTION

A. This includes providing materials, equipment and labor necessary to conduct restoration activities of areas disturbed by the remediation activities, including the private properties within the Residential Use Area to as close to pre-excavation conditions as possible. In addition, establishment of grass vegetation shall be conducted for the cover over the Interim Stockpile in the Tailings Impoundment.

B. This Section also includes the requirements for documenting existing conditions prior to conducting construction activities at identified individual properties within the Residential Use Area requiring remediation and for documenting the work and final restored conditions.

C. The photographic documentation includes administrative and procedural requirements for the following:

1. Preconstruction photographs and video,
2. Final condition photographs and video

D. Several optional work components as described in Section 01010, 'Summary of Work" and as shown on the drawings will required establishment of vegetation, including the sedimentation ponds at the Mine Operations Area and the run-on diversion swale above the Tailings Impoundment.

1.2 RELATED WORK SPECIFIED ELSEWHERE:

A. Related Sections include the following:

1. Section 01340: Submittal Procedures
2. Section 01780: Project Record Documents
3. Section 02315: Earthwork

1.3 DEFINITIONS

A. Finish Grade: Completed elevation of finished surface.

B. Topsoil: Native or imported topsoil, manufactured topsoil, or surface soil modified to become topsoil; mixed with soil amendments. Refer to Section 02315, "Earthwork".

C. Subgrade: Surface or elevation of subsoil remaining after completing excavation, or top surface of a fill or backfill immediately beneath topsoil or final gravel surface.

1.4 SUBMITTALS

A. Property Restoration Plans

1. Draft Property Restoration Plans have been prepared and shall be used by the Contractor in preparation of final Property Restoration Plans. The draft plans were prepared based on the preliminary limits of excavation shown on the drawings. The Property Restoration Plans will require modification and updating based on the final limits of soil excavation determined by the Contractor. All modified or amended Property Restoration Plans will require review and approval by the Owner as well as the private property owners prior to completing restoration activities.

2. Contractor shall prepare and submit final modified or amended Property Restoration Plans for all disturbed areas for each private property within the Residential Use Area. The Plans shall identify the activities to be performed to document the existing conditions of each residential property and the activities to restore the property to as close to pre-excavation conditions as possible.

B. Photograph Log and Key Plan: Prepare a log of photographs taken for each property along with a marked-up Individual Property Sketch with notation of vantage points marked for location and direction of each photograph. Indicate the progress of construction. Include same label information as corresponding set of photographs.

C. Digital Images: Submit a complete set of digital electronic files of photographs and videos for each individual property on DVD. Identify electronic media with property address and date photographs and video were taken.

D. Nomenclature/Identification of Photographs: Establish a photographic log to document all photographs. The photographic log may be in the form of a Microsoft Word or Excel file, or in the tag of the photograph. At a minimum, the log should include the following information:

1. Project number and name.
2. Property address.
3. Date photograph was taken if not digitally stamped by camera.
4. Description and purpose of photograph.
5. Vantage point, indicating location, direction (by compass point), and stage of construction.
6. Unique picture identification number.

E. Seed:

1. The Contractor shall select and submit proposed seed mixes for each restoration area depending on the use, level of maintenance, growing condition, etc.
2. Certification of Grass Seed: From seed vendor for each grass-seed mono-stand or mixture stating the botanical and common name and percentage by weight of each species and variety, and percentage of purity, germination, and weed seed. Include the year of production and date of packaging.
3. Seeding Schedule: Indicating anticipated dates for seeding.

F. Plants:

1. Submit the quality, size, genus, species, and variety of plants indicated in the Property Restoration Plans for each property
2. Planting Schedule: Indicating anticipated dates for planting.

G. Other Landscape Items:

1. Submit catalog cuts and/or vendor product data for other miscellaneous landscape restoration items (walkway/patio pavers, garden edging, etc.) as identified in the Property Restoration Plans.

1.5 COORDINATION AND COOPERATION WITH PROPERTY OWNERS

A. Coordinate and schedule access to each property with the property owners for property access prior to entering property in accordance with the signed Access Agreements. Notify the Resident or Owner in a timely fashion for issues concerning access or the ability to adequately document existing property conditions

1.6 QUALITY CONTROL

A. Provide quality, size, genus, species, and variety of plants indicated in the Property Restoration Plans for each property.

B. Provide quality materials and construction for the landscape restoration items indicated in the Property Restoration Plans for each property

1.7 DELIVERY, STORAGE, AND HANDLING

A. Seed: Deliver seed in original sealed, labeled, and undamaged containers.

B. Plants:

1. Deliver bare-root stock plants freshly dug. Immediately after digging up bare-root stock, pack root system in wet straw, hay, or other suitable material to keep root system moist until planting.
2. Do not prune trees and shrubs before delivery. Protect bark, branches, and root systems from sun scald, drying, wind burn, sweating, whipping, and other handling and tying damage. Do not bend or bind-tie trees or shrubs in such a manner as to destroy their natural shape. Provide protective covering of plants during shipping and delivery. Do not drop plants during delivery and handling.
3. Handle planting stock by root ball.
4. Store bulbs, corms, and tubers in a dry place at 60 to 65 deg F until planting.
5. Deliver plants after preparations for planting have been completed, and install immediately. If planting is delayed more than six hours after delivery, set plants and trees in their appropriate aspect (sun, filtered sun, or shade), protect from weather and mechanical damage, and keep roots moist.

1.8 SCHEDULING

A. Planting Restrictions: Plant during one of the following periods. Coordinate planting periods with maintenance periods to provide required maintenance from date of Substantial Completion.

1. Spring Planting: April 1 – June 1.
2. Fall Planting: August 15 - September 15
3. Dormant Seeding – After September 15 – before snow fall. If dormant seeding is conducted, additional seeding will likely be required the following spring.

B. Weather Limitations: Proceed with planting only when existing and forecasted weather conditions permit.

1.9 MAINTENANCE SERVICE

A. Initial Maintenance Service: Provide maintenance of grass and plantings as required in Part 3. Begin maintenance immediately after seeding and plants are installed and continue until turf and plantings are acceptably healthy and well established, but for not less than maintenance period below.

1. Maintenance Period for Trees and Shrubs: 3 months from date of planting completion.
2. Maintenance Period for Ground Cover and Other Plants: 1 month from date of planting completion.
3. Seeded Turf: 60 days from date of planting completion. When initial maintenance period has not elapsed before end of planting season, or if turf is not fully established, continue maintenance during next planting season.

B. Maintain and establish vegetation by watering, fertilizing, replanting, and other operations. Re-grade, and replant bare or eroded areas and re-mulch to produce a uniform growth. In areas where mulch has been disturbed by wind or maintenance operations, add new mulch. Anchor as required to prevent displacement.

C. Watering of seeded areas: Provide and maintain temporary piping, hoses, and watering equipment to convey water from sources and to keep seeded area uniformly moist to a depth of 4 inches.
   1. Schedule watering to prevent wilting, puddling, erosion, and displacement of seed or mulch. Lay out temporary watering system to avoid walking over muddy or newly planted areas.
   2. Water seeded areas at a minimum rate of 1 inch per week.

D. Plant watering: Provide and maintain temporary piping, hoses, and watering equipment to convey water from sources to planting locations as follows:
   1. The plants shall be watered immediately following planting.
   2. Soak the plants thoroughly again within a twenty-four (24) hour period after initial planting.
   3. Additional watering shall be made at least once every three weeks, unless otherwise directed, until final acceptance of the plant material.

1.10 WARRANTY

A. Warranty: Reseed, repair or replace plantings and accessories that fail in materials, workmanship, or growth within specified warranty period.

B. Failures include, but are not limited to, the following:
   1. Death and unsatisfactory growth, except for defects resulting from abuse, lack of adequate maintenance, or neglect by property owner, or incidents that are beyond Contractor's control.
   2. Structural failures including plantings falling or blowing over.

C. Warranty Periods from Date of Seeding or Planting Completion:
   1. Trees, Shrubs, Vines, and Ornamental Grasses: 12 months.
   2. Ground Covers, Biennials, Perennials, and Other Plants: 12 months.
   3. Annuals: 3 months.
   4. Grass Turf will be 12 months.

PART 2 - PRODUCTS

2.1 PHOTOGRAPHIC MEDIA

A. Digital Images: Provide images in uncompressed TIFF format or JPEG, produced by a digital camera with minimum sensor size of 4.0 megapixels, and at an image resolution of not less than 1024 by 768 pixels. Software for image viewing will be Adobe® Acrobat Professional.

2.2 VIDEO MEDIA

A. Digital Video: Provide video using a DVD camera with image stabilizer in MPEG-2 or MPEG-4 format.

2.3 TOPSOIL:

A. Refer to Section 02315, “Earthwork”.

2.4 SOIL MIX FOR PLANTS

A. Planting soil will be a mixture of topsoil, inorganic and organic soil amendments, and fertilizer. Topsoil will meet the requirements Section 02315, “Earthwork”.

B. For ericaceous plants and broad-leaved evergreens requiring an acid soil, planting soil will have a true pH of 4.5 to 5.5. If not, pH will be amended by the Contractor at his own expense to the proper range by mixing with sulfur.

C. Planting soil for general planting of nonacid-loving plants will have a true pH value of 6.0 to 7.0. If not, pH will be amended by the Contractor at his own expense to the proper range by mixing with dolomite limestone.

D. The amount of either sulfur or limestone required to adjust the planting soil to the proper pH range (above) will be determined on the basis of soil analysis tests.

2.5 INORGANIC SOIL AMENDMENTS

A. Provide soil inorganic amendments based on recommendations for soil analysis to be added to produce satisfactory planting soil suitable for healthy, viable plants.

B. Lime: Agricultural ground dolomite limestone conforming to the standards of the Association of Official Agricultural Chemists (AOAC).

C. Sulfur: Granular, biodegradable, containing a minimum of 90 percent sulfur, and with a minimum of 99 percent passing through No. 6 sieve and a maximum of 10 percent passing through No. 40 sieve.

D. Iron Sulfate: Granulated ferrous sulfate containing a minimum of 20 percent iron and 10 percent sulfur.

E. Aluminum Sulfate: Commercial grade, unadulterated.

F. Perlite: Horticultural perlite, soil amendment grade.

G. Agricultural Gypsum: Minimum 90 percent calcium sulfate, finely ground with 90 percent passing through No. 50 sieve.

H. Sand: Clean, washed, natural or manufactured, and free of toxic materials.

I. Diatomaceous Earth: Calcined, 90 percent silica, with approximately 140 percent water absorption capacity by weight.

2.6 ORGANIC SOIL AMENDMENTS

A. Provide soil organic amendments based on recommendations for soil analysis or; add peat or compost at a ratio of 1 to 10 topsoil and manure at a ratio of 1 to 4 topsoil; to produce satisfactory planting soil suitable for healthy, viable plants.

B. Compost: Well-composted, stable, and weed-free organic matter, pH range of 5.5 to 8; moisture content 35 to 55 percent by weight; 100 percent passing through 1/2-inch, and free of substances toxic to plantings.

C. Sphagnum Peat: Partially decomposed sphagnum peat moss, finely divided or of granular texture, with a pH range of 3.4 to 4.8.

D. Muck Peat: Partially decomposed moss peat, native peat, or reed-sedge peat, finely divided or of granular texture, with a pH range of 6 to 7.5.

E. Wood Derivatives: Decomposed, nitrogen-treated sawdust, ground bark, or wood waste; of uniform texture and free of chips, stones, sticks, soil, or toxic materials.

F. Manure: Well-rotted, unleached, stable or cattle manure containing not more than 25 percent by volume of straw, sawdust, or other bedding materials; free of toxic substances, stones, sticks, soil, weed seed, and material harmful to plant growth.

2.7 SEED

A. Grass Seed: Fresh, clean, dry, new-crop seed complying with AOSA's "Journal of Seed Technology; Rules for Testing Seeds" for purity and germination tolerances.

B. Seed Species: State-certified seed of grass species with not less than 80 percent germination, not less than 85 percent pure seed. Proposed seed mixes shall be suitable for the location, use, and maintenance requirements (i.e. lawn or unmaintained area).

C. Contractor proposed mix as recommended by Hancock County Conservation District and/or approved by the Owner.

2.8 PLANT MATERIAL

A. General: Furnish nursery-grown plants true to genus, species, variety, cultivar, stem form, shearing, and other features the Property Restoration Plans for each property. General requirements for all plants are specified herein. All plants will be first-class representatives of their normal species or varieties. Plants will have well-furnished branch systems together with vigorous fibrous root systems. Plants will be free from all insect pests, plant diseases, disfiguring knots, stubs, sun-scalds, abrasions of the bark, or any other form of injury or objectionable disfigurements. All plant material will comply with state and federal laws with respect to inspection for plant diseases and insect infestations. Plants will not be pruned before delivery, and no plants will be cut back from larger sizes to meet the sizes specified. Plants will be nursery grown unless otherwise specified and bear evidence of proper nursery care, including adequate transplanting and root pruning. No plant will be considered to be nursery grown unless it has been growing in a nursery for at least two years and unless it has been root pruned or transplanted no more than five years prior to digging.

B. Root-Ball Depth: Furnish trees and shrubs with root balls measured from top of root ball, which shall begin at root flare according to ANSI Z60.1. Root flare will be visible before planting.

C. Annuals and Biennials: Provide healthy, disease-free plants of species and variety shown or listed, with well-established root systems reaching to sides of the container to maintain a firm ball, but not with excessive root growth encircling the container. Provide only plants that are acclimated to outdoor conditions before delivery.

2.9 WATER

A. Clean, fresh potable water.

2.10 MULCHES FOR SEEDING

A. Straw Mulch: Provide air-dry, clean, mildew-and see-free, salt hay or threshed straw of wheat, rye, oats or barley.

B. Paper Fiber Mulch:

2.11 MULCHES FOR PLANTINGS

A. Provide organic or mineral mulch in accordance the Property Restoration Plan for each property.

B. Organic Mulch: Shredded hardwood, or Ground or shredded bark.

C. Compost Mulch: Well-composted, stable, and weed-free organic matter, pH range of 5.5 to 8; moisture content 35 to 55 percent by weight; 100 percent passing through 1-inch sieve; and free of substances toxic to plantings.

D. Mineral Mulch: Rounded riverbed gravel or smooth-faced stone; Crushed stone or gravel; Marble chips; or Granite chips.

1. Size Range: 1 inch maximum, 1/4 inch minimum.
2. Color: Uniform color range.

2.12 WEED-CONTROL BARRIERS

A. Nonwoven Geotextile Filter Fabric: Polypropylene or polyester fabric, 3 oz./sq. yd. minimum.

B. Composite Fabric: Woven, needle-punched polypropylene substrate bonded to a nonwoven polypropylene fabric, 4.8 oz./sq. yd.

PART 3 - EXECUTION

3.1 PRE-CONSTRUCTION DOCUMENTATION

A. General: Document existing property conditions prior to starting construction activities.
   1. Take photographs and video using the maximum range of depth of field, and that are in focus, to clearly show the condition of existing features.
   2. Photographs or video that are blurry or out-of-focus will not be accepted.
   3. If required, provide temporary lighting required to produce clear, well-lit photographs or videos without obscuring shadows.

B. Digital Images: Provide digital images exactly as originally recorded in the digital camera, without alteration, manipulation, editing, or modifications using image-editing software.
   1. Field Office Images: Maintain one set of images on DVD in the field office at Project site, available at all times for reference. Identify images same as for those submitted to Resident.
   2. Maintain the photograph log and key plan with each set of property photographs that identifies each photographic location.

C. Preconstruction Photographs: Before starting construction, take color**,** digital photographs of each individual property to suitably document existing conditions.
   1. Document existing features that are to be removed and replaced during the work.
   2. Flag excavation areas and/or construction limits before taking construction photographs.
   3. Take a suitable number of photographs to document existing conditions before starting the Work, and as required provide images from different vantage points.
   4. The Resident with the Contractor will conduct interior and exterior photographic documentation of existing buildings or permanent structures to accurately record existing conditions prior to the start of construction. Include condition of foundations or basement walls, floors, walls, doors and windows, and ceilings. Existing observed damage will receive detailed documentation (i.e. width and lengths of cracking utilizing scales or rules; infrared shots of cracks; floors using long levels; bulging or leaning walls; etc.).

D. Preconstruction Video: Video documentation may be used to supplement the still image photographs. Provide audio recording of comments or observations as required during the recording.

3.2 FINAL CONDITION PHOTOGRAPHS

A. Final Condition Photographs: After construction is completed, including restoration of all features, take color**,** digital photographs of each individual property to suitably document final conditions.
   1. Document features that have been restored during the work.
   2. Document the condition of existing features that remained in place during the Work.
   3. Take a suitable number of photographs to document final conditions following completion of the Work, and provide images from similar vantage points as the pre-construction photographs.

4. Include interior and exterior photographic documentation of existing buildings or permanent structures to accurately record conditions following completion of construction. Include condition of foundations or basement walls, floors, walls, doors and windows, and ceilings. Existing or new damage will receive detailed documentation.

B. Final Condition Video: Video documentation may be used to supplement the still image photographs. Provide audio recording of comments or observations as required during the recording.

3.3 EXAMINATION

A. Examine areas to be seeded or planted for compliance with requirements and other conditions affecting performance. Proceed with installation only after unsatisfactory conditions have been corrected.

3.3 GRADING AND SPREADING TOPSOIL:

A. Remove all debris and other inorganic materials on any prepared subgrades, and reshape and dress any damaged or eroded slopes, swales, and other areas. Scarify and loosen subgrade to a friable condition in any areas where compaction may have occurred. Loam shall not be placed until subgrade is in suitable condition and free of excessive moisture or frozen materials. Stockpiled and off-site loam shall be spread as required on all disturbed and bare areas to produce a total depth of 4” or 8” as shown on the plan. Fill all depressions in existing grades with suitable fill materials as specified in Section 02200 prior to spreading or loam, then shape and finish grade to depth of loam required.

B. Area shall be progressively fine graded and machine and hand raked, with stockpiled and off-site loam added as required to correct depressions and other irregularities, to produce smooth and unbroken finish grades and the depth of topsoil required. Where additional topsoil is placed on existing loam disc harrow to mix to 4”.

C. Drawings show grading design intent to achieve a uniform grade not less than 1.25% slope. Finish grades shall conform to lines, grades, sections, and shapes of lawn areas as required. Provide positive drainage. Provide smooth, uniform, rounded transitions at all changes and break in grade.

D. Starter fertilizers: All required materials shall be spread and distributed into the soil at rates and amounts specified herein.

E. After establishment of finish grade, entire area shall be hand raked and rolled using a light roller.

3.4 PREPARATION OF AREAS FOR SEEDING:

A. This work shall consist of the preparation of the seed bed. Work shall be done as described herein:

1. Areas shall be finely raked to a finished grade. Substantially, all sticks, litter, wire, weeds, cable or stones larger than one inch (1”) in greater dimension shall be removed and disposed of as directed.
2. Where the soil has become compacted, prior to fine raking, areas to be seeded shall be scarified by discing, york raking or other approved methods to a minimum depth of two inches (2”).
3. No seeding will be permitted on areas where the seedbed has not been properly prepared or where the soil is compacted.
4. Request inspection of the work for approval before proceeding with seeding.

3.5 APPLICATION OF LIMESTONE:

A. When applied dry, limestone shall be spread evenly and incorporated thoroughly into the soil by discing or other approved means.
B. When applied hydraulically, no discing will be necessary.
C. Granular treatment to be applied at the rate of 25 to 50lbs per 1000 S.F. or as required by soil pH test to produce a pH of 6.0 to 6.5.

3.6 APPLICATION OF LAWN STARTER FERTILIZER:
A. After the incorporation of ground limestone into the seed bed, then apply the fertilizer.
B. Fertilizer shall be applied at the rate of 20lbs per 1000 S.F.
C. Apply fertilizer according to manufacturer's recommendations.

3.7 APPLICATION OF TURF MAINTENANCE FERTILIZER:
A. One application of turf maintenance fertilizer will be required before final acceptance of seeded areas.
B. Fertilizer shall be applied at the rate of 2lbs per 1,000 S.F. after seeding has been established.
C. Fertilizer should be applied at a time which shall be requested in writing by the Contractor and approved in writing by the Resident.

3.8 SEEDING
A. Dry Method
1. Sow seed with spreader or seeding machine. Do not broadcast or drop seed when wind velocity exceeds 5 mph. Evenly distribute seed by sowing equal quantities in two directions at right angles to each other.
2. Do not use wet seed or seed that is moldy or otherwise damaged.
3. Rake seed lightly into top 1/8 inch of topsoil, roll lightly, and water with fine spray.
B. Hydraulic Method
1. The application of grass, seed, fertilizer, limestone, and a suitable mulch, if approved, may be accomplished in one operation by the use of an approved spraying machine.
2. Mix materials with water in the machine and keep in an agitated state in order that the materials may be uniformly suspended in the water.
3. The spraying equipment shall be so designed that when the solution is sprayed over an area, the resulting deposits of limestone, fertilizer, and grass seed are equal in quantity to the required rates.
4. Flush and clean hydraulic seeding and fertilizing machine each day before seeding is to be started.
5. If the results of the spray operations are unsatisfactory, abandon this method and apply the materials by the dry method.
6. When inoculum is required, mix with the seed and spray.
7. Compaction or rolling not required.
8. Unless mulch material required is applied during the seeding operation or within 1/2 hour following the seeding operation, take measures to protect the seed from sunlight and heat such as the use of a light brush dragged over the seeded areas to stir the seed into the soil, taking care not to carry the seed ahead.
C. Sow seed at the rate recommended for each seed mix.
D. Protect seeded areas by spreading straw mulch. Spread uniformly at a minimum rate of 2 tons/acre to form a continuous blanket 1-1/2 inches in loose depth over seeded areas. Spread by hand, blower, or other suitable equipment.

1. Anchor straw mulch by crimping into topsoil with suitable mechanical equipment.

3.9 SATISFACTORY GRASS TURF GROWTH

A. Satisfactory Seeded Growth: At end of maintenance period, a healthy, uniform, close stand of grass has been established, with coverage exceeding 85 percent over any 10 sq. ft. and bare spots not exceeding 5 by 5 inches. Contractor is responsible for providing water as necessary to ensure establishment and growth.

B. The Contractor shall be responsible for ensuring adequate grass growth and maintenance through two (2) cuttings.

3.10 PLANTING AREA ESTABLISHMENT

A. Loosen subgrade of planting areas to a minimum depth of 6 inches. Remove stones larger than 2 inches in any dimension and sticks, roots, rubbish, and other extraneous matter.

1. Thoroughly blend planting soil before spreading or spread topsoil, apply soil amendments and fertilizer on surface, and thoroughly blend planting soil.
2. Spread planting soil to a depth of 8 inches but not less than required for plant requirements and to meet finish grades after natural settlement. Do not spread if planting soil or subgrade is frozen, muddy, or excessively wet.

B. Finish Grading: Grade planting areas to a smooth, uniform surface plane with loose, uniformly fine texture. Roll and rake, remove ridges, and fill depressions to meet finish grades.

3.11 EXCAVATION FOR TREES AND SHRUBS

A. Planting Pits and Trenches: Excavate circular planting pits with sides sloping slightly inward. Ensure that root ball will sit on firmly compacted topsoil in the base of the hole to prevent settling. Scarify sides of planting pit smeared or smoothed during excavation.

1. Excavate at least 12 inches wider than root spread and deep enough to accommodate vertical roots for bare-root stock.
2. Do not excavate deeper than the depth of compacted topsoil base and depth of the root ball, measured from the root flare to the bottom of the root ball.

3.12 TREE, SHRUB, AND VINE PLANTING

A. Before planting, verify that root flare is visible at top of root ball according to ANSI Z60.1.

B. Remove stem girdling roots and kinked roots. Remove injured roots by cutting cleanly; do not break.

C. Set stock plumb and in center of planting pit or trench with root flare 1 to 2 inches above adjacent finish grades.

1. Use planting soil for backfill.
2. Balled and Burlapped: After placing some backfill around root ball to stabilize plant, carefully cut and remove burlap, rope, and wire baskets from tops of root balls and from sides, but do not remove from under root balls. Remove pallets, if any, before setting. Do not use planting stock if root ball is cracked or broken before or during planting operation.
3. Container-Grown: Carefully remove root ball from container without damaging root ball or plant.

4. Fabric Bag-Grown Stock: Carefully remove root ball from fabric bag without damaging root ball or plant. Do not use planting stock if root ball is cracked or broken before or during planting operation.
5. Backfill around root ball in layers, tamping to settle soil and eliminate voids and air pockets. When planting pit is approximately one-half filled, water thoroughly before placing remainder of backfill. Repeat watering until no more water is absorbed.
6. Place planting tablets in each planting pit when pit is approximately one-half filled; in amounts recommended in soil reports from soil-testing laboratory. Place tablets beside the root ball about 1 inch from root tips; do not place tablets in bottom of the hole.
7. Continue backfilling process. Water again after placing and tamping final layer of soil.

D. Bare-Root Stock: Set and support bare-root stock in center of planting pit or trench with root flare 1 to 2 inches above adjacent finish grade.
1. Use planting soil for backfill.
2. Spread roots without tangling or turning toward surface, and carefully work backfill around roots by hand. Puddle with water until backfill layers are completely saturated. Plumb before backfilling, and maintain plumb while working backfill around roots and placing layers above roots.
3. Place planting tablets in each planting pit when pit is approximately one-half filled; in amounts recommended in soil reports from soil-testing laboratory. Place tablets beside soil-covered roots about 1 inch from root tips; do not place tablets in bottom of the hole or touching the roots.
4. Continue backfilling process. Water again after placing and tamping final layer of soil.

E. When planting on slopes, set the plant so the root flare on the uphill side is flush with the surrounding soil on the slope; the edge of the root ball on the downhill side will be above the surrounding soil. Apply enough soil to cover the downhill side of the root ball.

3.13 TREE, SHRUB, AND VINE PRUNING

A. Prune, thin, and shape trees, shrubs, and vines according to standard professional horticultural and arboricultural practices. Unless otherwise indicated by Resident, do not cut tree leaders; remove only injured, dying, or dead branches from trees and shrubs; and prune to retain natural character.

3.14 GROUND COVER AND PLANT PLANTING

A. Set out and space ground cover and plants other than trees, shrubs, and vines nursery or planting instructions in even rows with triangular spacing.
B. Use planting soil for backfill.
C. Dig holes large enough to allow spreading of roots.
D. Work soil around roots to eliminate air pockets and leave a slight saucer indentation around plants to hold water.
E. Water thoroughly after planting, taking care not to cover plant crowns with wet soil.
D. Protect plants from hot sun and wind; remove protection if plants show evidence of recovery from transplanting shock.

3.15 PLANTING AREA MULCHING

A. Install weed-control barriers before mulching according to manufacturer's written instructions. Completely cover area to be mulched, overlapping edges a minimum of 4 inches and secure seams with galvanized pins.

B. Mulch backfilled surfaces of planting areas and other areas indicated.

1. Trees and Tree-like Shrubs in Turf Areas: Apply organic or mineral mulch ring of 2-inch average thickness, with a minimum 18-inch radius around trunks or stems unless otherwise directed. Do not place mulch within 3 inches of trunks or stems.

2. Organic Mulch and Mineral Mulch in Planting Areas: Apply 2-inch average thickness of mulch extending approximately 8 inches beyond edge of individual planting pit or trench and over whole surface of planting area, and finish level with adjacent finish grades. Do not place mulch within 3 inches of trunks or stems.

3.16 PLANT MAINTENANCE

A. Maintain plantings by pruning, cultivating, watering, weeding, fertilizing, mulching, restoring planting saucers, resetting to proper grades or vertical position, and performing other operations as required to establish healthy, viable plantings. Spray or treat as required to keep trees and shrubs free of insects and disease.

B. Fill in as necessary soil subsidence that may occur because of settling or other processes. Replace mulch materials damaged or lost in areas of subsidence.

C. Apply treatments as required to keep plant materials, planted areas, and soils free of pests and pathogens or disease. Use practices to minimize the use of pesticides and reduce hazards.

D. Apply pesticides and other chemical products and biological control agents in accordance with authorities having jurisdiction and manufacturer's written recommendations. Coordinate applications with other construction operations and others in proximity to the Work. Notify Owner before each application is performed.

E. Protect plants from damage due to landscape operations and operations of other contractors and trades. Maintain protection during installation and maintenance periods.

3.17 CLEANUP AND PROTECTION

A. Promptly remove soil and debris created by seeding work from paved areas. Clean wheels of vehicles before leaving site to avoid tracking soil onto roads, walks, or other paved areas.

B. Erect barricades and warning signs as required to protect newly planted areas from traffic. Maintain barricades throughout maintenance period and remove after lawn is established.

C. Remove erosion-control measures after grass establishment period.

3.18 WINTERIZATION

A. Should Project timing and schedule require establishing a vegetated cover during the following, the Contractor shall completely and adequately mulch all disturbed areas at the end of construction activities and temporary and applicable erosion and sediment control measures left in place.

B. The Contractor may conduct dormant seeding prior to mulching the Site, but additional seeding in the spring will likely be required. The seeding maintenance period will be cared over to the following spring.

3.19 ROAD RESTORATION

A. Old Mine Road and any other disturbed roadways within the Residential Use Area shall be replaced to the original location and upgraded as required to meet the minimum standards/requirements identified by the Town of Brooksville in accordance with Section 02741, “Road Construction”.

END OF SECTION