Known for excellence.
Built on trust.

GEOTECHNICAL
ENVIRONMENTAL
ECOLOGICAL
WATER
CONSTRUCTION MANAGEMENT

5 Commerce Park North
Suite 201
Bedford, NH 03110
T: 603.623.3600
F: 603.624.9463
www.gza.com

VIA EMAIL

June 28, 2019
File No. 04.0190824.01

Ms. Shauna Little
Remediation General Permit
Notice of Intent Processing
United States Environmental Protection Agency
5 Post Office Square, Suite 100
Mail Code OEP06-4
Boston, Massachusetts 02109-3912

Re: National Pollution Discharge Elimination System
Notice of Intent (NOI) Addendum
Remediation General Permit
Eversource Energy
Newington, New Hampshire

Dear Ms. Little:

This letter transmits an addendum to the Notice of Intent (NOI) submitted by GZA on June 7, 2019 requesting a determination of coverage under the United States Environmental Protection Agency's (EPA's) Remedial General Permit (RGP), pursuant EPA's National Pollutant Discharge Elimination System (NPDES) program. This addendum was prepared in response to your email dated June 20, 2019 requesting NOI corrections and additional information. The revised NOI Form is attached to this submittal, along with supporting documentation consistent with our phone communications on June 25, 2019.

1. ALUMINUM SAMPLING

GZA conducted aluminum sampling of both the untreated effluent (monitoring wells B101 and B102) and receiving water (Knights Brook) on June 25, 2019. Sampling was conducted in accordance with New Hampshire's standard for aluminum, which is based on the acid soluble fraction (Env-Wq 1703.21, Table 1703-1). Results indicated that aluminum was detected at the reporting limit of 0.01 milligrams per liter (mg/L) in monitoring well B101. Aluminum was not detected in monitoring well B102 or Knights Brook. While there is no Ambient Groundwater Quality Standard for aluminum, the detection at the reporting limit of 0.01 mg/L does not exceed the New Hampshire Department of Environmental Services (NHDES) Water Quality Criteria For Toxic Substances (Fresh Acute Criteria = 0.75 mg/L, Fresh Chronic Criteria = 0.087 mg/L), or the more stringent NHDES Drinking Water Program Analytical Requirements for Community Public Water Systems (MCL = 0.05 – 0.2 mg/L, Trigger = 0.05 mg/L). The analytical laboratory report is included in **Attachment A**.

An Equal Opportunity Employer M/F/V/H

Based on these results, it is not anticipated that the proposed dewatering activities will result in exceedances of the NHDES Water Quality Criteria for aluminum in Knights Brook.

2. 7Q10, WQBEL, AND DILUTION FACTOR CALCULATIONS

Based on communications with Haley Franz of NHDES and review of a supplemental document for the Dingman Method, the NOI Form and supporting documentation have been revised to reflect a 7Q10 value of 0.0006 cfs and a dilution factor of 1, as indicated by NHDES via email on 5/22/2019. Revised 7Q10, dilution factor, and WQBEL calculations are provided in **Attachment B**.

3. ADDITIONAL SOURCE WATER INFORMATION

GZA provides the information and data below as an alternate rationale for absence of parameters in the contamination types listed in tables B-F. The work described below was conducted as part of an extensive review of the work area by Eversource and their consultant, GEI, Inc. (GEI), consistent with requirements of the Site Evaluation Committee for permit authorization for the Seacoast Reliability Project. The work below resulted from review of potential sources of contamination in the vicinity of the project site and was guided based on recommendations from NHDES and municipal input over several years.

On August 26, 2016, GEI observed DrillEx Environmental of West Boylston, Massachusetts advance three borings and install three groundwater monitoring wells (B101, B102, and B103) to evaluate environmental site conditions. Boring locations are shown on Figure 2, included in GZA's original NOI Submittal. Borings were advanced to approximately 8 feet below grade using hollow stem augers with continuous split spoon sampling. GEI collected two soil samples from each boring consisting of composite samples from the 0- to 4-foot interval and the 4- to 8-foot interval (B101[S1-S2], B101[S3-S4], B102 [S1-S2], B102 [S3-S4], B103[S1-S2], B103[S3-S4]).

GEI submitted the soil samples to Alpha Analytical, Inc. (Alpha) of Westborough, Massachusetts to be tested for PFOA, PFOS, and off-site disposal characterization parameters including: volatile organic compounds (VOCs), semi-volatile organic compounds (SVOCs), total petroleum hydrocarbons (TPH), polychlorinated biphenyls (PCBs), RCRA 8 metals (arsenic, barium, cadmium, chromium [total], lead, mercury, selenium, silver), conductivity, corrosivity, ignitability, and reactivity (cyanide and sulfide).

In general, VOCs, SVOCs, TPH, and PCBs were either not detected or detected well below applicable standards. Based on these results, GZA has concluded that these contaminants are believed absent on the site. Soil chemical testing results are summarized, and the laboratory data report is included in **Attachment C**.

4. TREATMENT DETAILS

Consistent with recent discussions between Eversource, their consultants (GZA and GEI), and NHDES, the proposed treatment system is designed to reduce total suspended solids (TSS) and concentrations of per- and polyfluorinated alkyl substances (PFAS) at a maximum flow rate of 25 gallons per minute (gpm). A detailed description of the water treatment system, system schematic, and cut sheets for major system components sheets prepared by Lockwood Remediation Technologies, LLC are provided in **Attachment D**.

It is GZA's opinion that the proposed discharge is eligible for coverage under the NPDES RGP. On behalf of Eversource, GZA is requesting coverage under the NPDES RGP for the discharge of groundwater to Knights Brook

in support of construction dewatering activities that are to take place in the Eversource Right-of-Way at Frink Farm and north of Hannah Lane in Newington, New Hampshire.

If you have additional questions, please contact Mr. Matthew Deane at 603-232-8711 or at matthew.deane@gza.com.

Very truly yours,

GZA GEOENVIRONMENTAL, INC.

Matthew J. Deane
Assistant Project Manager

Deborah M. Zarta Gier, CNRP
Principal

MJD/DMZ:tmd
\\gzabedford\jobs\04jobs\0190800s\04.0190842.00 jcr -eversource f107\04.0190842.01\work\dewatering\frink farm rgp\addendum\final 04.0190842.01 rpg noi cvr letter 062819.docx

Attachments: Remediation General Permit Notice of Intent Form
Attachment A – Analytical Laboratory Results (Aluminum)
Attachment B – Flow and Effluent Calculations
Attachment C – Analytical Laboratory Results (Soil VOCs, SVOCs, TPH, and PCBs)
Attachment D – Treatment System Information

cc: Kurt Nelson, Eversource
Haley Franz, Water Division, New Hampshire Department of Environmental Services
Town Clerk, Town of Newington, New Hampshire

Remediation General Permit Notice of Intent Form

II. Suggested Format for the Remediation General Permit Notice of Intent (NOI)

A. General site information:

1. Name of site: F107 Transmission Line Rebuild - Frink Farm Trench Excavation	Site address: Transmission Line Right of Way - N/A Street:		
	City: Newington	State: NH	Zip: 03801
2. Site owner John Frink 272 Nimble Hill Road Newington, NH 03801 Owner is (check one): ☐ Federal ☐ State/Tribal ■ Private ☐ Other; if so, specify:	Contact Person: Dena Champy, Eversource		
	Telephone: 508-954-2736	Email: dena.champy@eversource.com	
	Mailing address: Street: 13 Legends Drive		
	City: Hooksett	State: NH	Zip: 03106
3. Site operator, if different than owner Eversource Energy 13 Legends Drive Hooksett, NH 03106	Contact Person: Dena Champy, Eversource		
	Telephone: 508-954-2736	Email: dena.champy@eversource.com	
	Mailing address: Street: 13 Legends Drive		
	City: Hooksett	State: NH	Zip: 03106
4. NPDES permit number assigned by EPA: NHR1000QH NPDES permit is (check all that apply: ☐ RGP ☐ DGP ■ CGP ☐ MSGP ☐ Individual NPDES permit ☐ Other; if so, specify:	5. Other regulatory program(s) that apply to the site (check all that apply): ☐ MA Chapter 21e; list RTN(s): ☐ NH Groundwater Management Permit or Groundwater Release Detection Permit:	☐ CERCLA ☐ UIC Program ☐ POTW Pretreatment ☐ CWA Section 404	

B. Receiving water information:

1. Name of receiving water(s):	Waterbody identification of receiving water(s):	Classification of receiving water(s):
Knights Brook	NHRIV600030904-09	Class B

Receiving water is (check any that apply): ☐ Outstanding Resource Water ☐ Ocean Sanctuary ☐ territorial sea ☐ Wild and Scenic River

2. Has the operator attached a location map in accordance with the instructions in B, above? (check one): ■ Yes ☐ No Refer to **Figure 1**

Are sensitive receptors present near the site? (check one): ■ Yes ☐ No

If yes, specify: Surface water (receiving water), wetlands, as illustrated on Figure 1 and Figure 2.

3. Indicate if the receiving water(s) is listed in the State's Integrated List of Waters (i.e., CWA Section 303(d)). Include which designated uses are impaired, and any pollutants indicated. Also, indicate if a final TMDL is available for any of the indicated pollutants. For more information, contact the appropriate State as noted in Part 4.6 of the RGP. Refer to **Attachment A**

4. Indicate the seven day-ten-year low flow (7Q10) of the receiving water determined in accordance with the instructions in Appendix V for sites located in Massachusetts and Appendix VI for sites located in New Hampshire.	0.0006 cfs
5. Indicate the requested dilution factor for the calculation of water quality-based effluent limitations (WQBELs) determined in accordance with the instructions in Appendix V for sites in Massachusetts and Appendix VI for sites in New Hampshire.	1

6. Has the operator received confirmation from the appropriate State for the 7Q10and dilution factor indicated? (check one): ■ Yes ☐ No

If yes, indicate date confirmation received: 5/22/19

7. Has the operator attached a summary of receiving water sampling results as required in Part 4.2 of the RGP in accordance with the instruction in Appendix VIII? (check one): ■ Yes ☐ No

C. Source water information:

1. Source water(s) is (check any that apply):

☐ Contaminated groundwater Has the operator attached a summary of influent sampling results as required in Part 4.2 of the RGP in accordance with the instruction in Appendix VIII? (check one): ☐ Yes ■ No	☐ Contaminated surface water Has the operator attached a summary of influent sampling results as required in Part 4.2 of the RGP in accordance with the instruction in Appendix VIII? (check one): ☐ Yes ☐ No	☐ The receiving water ☐ A surface water other than the receiving water; if so, indicate waterbody:	☐ Potable water; if so, indicate municipality or origin: ■ Other; if so, specify: Groundwater containing low levels of PFAS below NHAGQS.

2. Source water contaminants: Groundwater containing low levels of PFOA and PFOS below NHAGQS.	
a. For source waters that are contaminated groundwater or contaminated surface water, indicate are any contaminants present that are not included in the RGP? (check one): ☐ Yes ■ No If yes, indicate the contaminant(s) and the maximum concentration present in accordance with the instructions in Appendix VIII. Refer to **Attachment B**	b. For a source water that is a surface water other than the receiving water, potable water or other, indicate any contaminants present at the maximum concentration in accordance with the instructions in Appendix VIII? (check one): ☐ Yes ☐ No
3. Has the source water been previously chlorinated or otherwise contains residual chlorine? (check one): ☐ Yes ■ No	

D. Discharge information

1.The discharge(s) is a(n) (check any that apply): ☐ Existing discharge ■ New discharge ☐ New source	
Outfall(s): Outfall 001 discharges to Knight Brook.	Outfall location(s): (Latitude, Longitude) 43° 6'3.26"N , 70°50'13.57"W
Discharges enter the receiving water(s) via (check any that apply): ■ Direct discharge to the receiving water ☐ Indirect discharge, if so, specify: Direct discharge to Knight's Brook via stationary settling tanks. Prior to discharge, water be stored in settling tanks and run through a silt bag & carbon filte ☐ A private storm sewer system ☐ A municipal storm sewer system If the discharge enters the receiving water via a private or municipal storm sewer system: Has notification been provided to the owner of this system? (check one): ☐ Yes ☐ No Has the operator has received permission from the owner to use such system for discharges? (check one): ☐ Yes ☐ No, if so, explain, with an estimated timeframe for obtaining permission: Has the operator attached a summary of any additional requirements the owner of this system has specified? (check one): ☐ Yes ☐ No	
Provide the expected start and end dates of discharge(s) (month/year): August 1, 2019 to October 31, 2019. Indicate if the discharge is expected to occur over a duration of: ■ less than 12 months ☐ 12 months or more ☐ is an emergency discharge	
Has the operator attached a site plan in accordance with the instructions in D, above? (check one): ■ Yes ☐ No Refer to **Figure 1**	

<table>
<tr><td>2. Activity Category: (check all that apply)</td><td colspan="2">3. Contamination Type Category: (check all that apply)</td></tr>
<tr><td rowspan="4">☐ I – Petroleum-Related Site Remediation
☐ II – Non-Petroleum-Related Site Remediation
■ III – Contaminated Site Dewatering
☐ IV – Dewatering of Pipelines and Tanks
☐ V – Aquifer Pump Testing
☐ VI – Well Development/Rehabilitation
☐ VII – Collection Structure Dewatering/Remediation
☐ VIII – Dredge-Related Dewatering</td><td colspan="2">a. If Activity Category I or II: (check all that apply)

☐ A. Inorganics
☐ B. Non-Halogenated Volatile Organic Compounds
☐ C. Halogenated Volatile Organic Compounds
☐ D. Non-Halogenated Semi-Volatile Organic Compounds
☐ E. Halogenated Semi-Volatile Organic Compounds
☐ F. Fuels Parameters</td></tr>
<tr><td colspan="2">b. If Activity Category III, IV, V, VI, VII or VIII: (check either G or H)</td></tr>
<tr><td>■ G. Sites with Known Contamination</td><td>☐ H. Sites with Unknown Contamination</td></tr>
<tr><td>c. If Category III-G, IV-G, V-G, VI-G, VII-G or VIII-G: (check all that apply)

■ A. Inorganics
☐ B. Non-Halogenated Volatile Organic Compounds
☐ C. Halogenated Volatile Organic Compounds
☐ D. Non-Halogenated Semi-Volatile Organic Compounds
☐ E. Halogenated Semi-Volatile Organic Compounds
☐ F. Fuels Parameters</td><td>d. If Category III-H, IV-H, V-H, VI-H, VII-H or VIII-H Contamination Type Categories A through F apply</td></tr>
</table>

4. Influent and Effluent Characteristics

Parameter	Known or believed absent	Known or believed present	# of samples	Test method (#)	Detection limit (µg/l)	Influent		Effluent Limitations	
						Daily maximum (µg/l)	Daily average (µg/l)	TBEL	WQBEL
A. Inorganics									
Ammonia	✔							Report mg/L	---
Chloride		✔	1	44,300.0	12.5	145,000		Report µg/l	---
Total Residual Chlorine	✔							0.2 mg/L	
Total Suspended Solids		✔						30 mg/L	---
Antimony		✔	1	3,200.8	4	ND		206 µg/L	36.9
Arsenic		✔	1	3,200.8	0.5	0.29		104 µg/L	86
Cadmium		✔	1	3,200.8	0.2	ND		10.2 µg/L	3.1462
Chromium III		✔	1	3,200.8	10	ND		323 µg/L	1034.5
Chromium VI		✔	1	1,7196A	10	ND		323 µg/L	98.1
Copper		✔	1	3,200.8	1	ND		242 µg/L	113.6
Iron		✔	1	3,200.8	50	158		5,000 µg/L	8580
Lead		✔	1	3,200.8	1	ND		160 µg/L	46.01
Mercury		✔	1	3,200.8	0.2	ND		0.739 µg/L	7.77
Nickel		✔	1	3,200.8	2	1.01		1,450 µg/L	633.1
Selenium		✔	1	3,200.8	5	ND		235.8 µg/L	42.9
Silver		✔	1	3,200.8	0.4	ND		35.1 µg/L	65.7
Zinc		✔	1	3,200.8	10	ND		420 µg/L	1455.1
Cyanide	✔							178 mg/L	
B. Non-Halogenated VOCs									
Total BTEX	✔							100 µg/L	---
Benzene	✔							5.0 µg/L	---
1,4 Dioxane	✔							200 µg/L	---
Acetone	✔							7.97 mg/L	---
Phenol	✔							1,080 µg/L	

Parameter	Known or believed absent	Known or believed present	# of samples	Test method (#)	Detection limit (µg/l)	Influent		Effluent Limitations	
						Daily maximum (µg/l)	Daily average (µg/l)	TBEL	WQBEL
C. Halogenated VOCs									
Carbon Tetrachloride	✔							4.4 µg/L	---
1,2 Dichlorobenzene	✔							600 µg/L	---
1,3 Dichlorobenzene	✔							320 µg/L	---
1,4 Dichlorobenzene	✔							5.0 µg/L	---
Total dichlorobenzene	✔							763 µg/L in NH	---
1,1 Dichloroethane	✔							70 µg/L	---
1,2 Dichloroethane	✔							5.0 µg/L	---
1,1 Dichloroethylene	✔							3.2 µg/L	---
Ethylene Dibromide	✔							0.05 µg/L	---
Methylene Chloride	✔							4.6 µg/L	---
1,1,1 Trichloroethane	✔							200 µg/L	---
1,1,2 Trichloroethane	✔							5.0 µg/L	---
Trichloroethylene	✔							5.0 µg/L	---
Tetrachloroethylene	✔							5.0 µg/L	---
cis-1,2 Dichloroethylene	✔							70 µg/L	---
Vinyl Chloride	✔							2.0 µg/L	---
D. Non-Halogenated SVOCs									
Total Phthalates	✔							190 µg/L	
Diethylhexyl phthalate	✔							101 µg/L	
Total Group I PAHs	✔							1.0 µg/L	---
Benzo(a)anthracene	✔							As Total PAHs	
Benzo(a)pyrene	✔								
Benzo(b)fluoranthene	✔								
Benzo(k)fluoranthene	✔								
Chrysene	✔								
Dibenzo(a,h)anthracene	✔								
Indeno(1,2,3-cd)pyrene	✔								

Parameter	Known or believed absent	Known or believed present	# of samples	Test method (#)	Detection limit (µg/l)	Influent		Effluent Limitations	
						Daily maximum (µg/l)	Daily average (µg/l)	TBEL	WQBEL
Total Group II PAHs	✔							100 µg/L	---
Naphthalene	✔							20 µg/L	---
E. Halogenated SVOCs									
Total PCBs	✔							0.000064 µg/L	---
Pentachlorophenol	✔							1.0 µg/L	---
F. Fuels Parameters									
Total Petroleum Hydrocarbons	✔							5.0 mg/L	---
Ethanol	✔							Report mg/L	---
Methyl-tert-Butyl Ether	✔							70 µg/L	
tert-Butyl Alcohol	✔							120 µg/L in MA 40 µg/L in NH	---
tert-Amyl Methyl Ether	✔							90 µg/L in MA 140 µg/L in NH	---
Other (i.e., pH, temperature, hardness, salinity, LC_{50}, additional pollutants present); if so, specify:									
pH		✔	1	121,4500H		6.8 SU			
PFOA		✔	7	537M	1.78-8.01	11.2 ng/L	5.81 ng/L		
PFOS		✔	7	537M	1.78-8.01	25.1 ng/L	10.02 ng/L		

E. Treatment system information

1. Indicate the type(s) of treatment that will be applied to effluent prior to discharge: (check all that apply)

☐ Adsorption/Absorption ☐ Advanced Oxidation Processes ☐ Air Stripping ■ Granulated Activated Carbon ("GAC")/Liquid Phase Carbon Adsorption
☐ Ion Exchange ☐ Precipitation/Coagulation/Flocculation ☐ Separation/Filtration ■ Other; if so, specify:
Settling tanks, filter bag, liquid phase carbon filtration

2. Provide a written description of all treatment system(s) or processes that will be applied to the effluent prior to discharge.

Groundwater will be pumped from the excavation directly into two (2) mobile water totes. These water totes will transport the water to two (2) stationary settling/frac tanks located in proximity to Knight's Brook. After sufficient time has passed to allow for the settling of suspended solids, the water will be pumped to dewatering filter bag and then pumped to a sampling tank equipped with a liquid phase carbon filtration vessel. Once filtered, water will be discharged to Knights Brook via Outfall 1.

Identify each major treatment component (check any that apply):
■ Fractionation tanks☐ Equalization tank ☐ Oil/water separator ☐ Mechanical filter ☐ Media filter
☐ Chemical feed tank ☐ Air stripping unit ■ Bag filter ■ Other; if so, specify: liquid phase carbon filtration

Indicate if either of the following will occur (check any that apply):
☐ Chlorination ☐ De-chlorination

3. Provide the **design flow capacity** in gallons per minute (gpm) of the most limiting component. Indicate the most limiting component: outlet from settling tanks Is use of a flow meter feasible? (check one): ■ Yes ☐ No, if so, provide justification:	3.125 GPM
Provide the proposed maximum effluent flow in gpm.	3.125 GPM
Provide the average effluent flow in gpm.	1.188 GPM
If Activity Category IV applies, indicate the estimated total volume of water that will be discharged:	N/A

4. Has the operator attached a schematic of flow in accordance with the instructions in E, above? (check one): ■ Yes ☐ No Refer to **Figure 3**

F. Chemical and additive information

1. Indicate the type(s) of chemical or additive that will be applied to effluent prior to discharge or that may otherwise be present in the discharge(s): (check all that apply)

☐ Algaecides/biocides ☐ Antifoams ☐ Coagulants ☐ Corrosion/scale inhibitors ☐ Disinfectants ☐ Flocculants ☐ Neutralizing agents ☐ Oxidants ☐ Oxygen ☐ scavengers ☐ pH conditioners ☐ Bioremedial agents, including microbes ☐ Chlorine or chemicals containing chlorine ☐ Other; if so, specify:
N/A

2. Provide the following information for each chemical/additive, using attachments, if necessary:

a. Product name, chemical formula, and manufacturer of the chemical/additive;
b. Purpose or use of the chemical/additive or remedial agent;
c. Material Safety Data Sheet (MSDS) and Chemical Abstracts Service (CAS) Registry number for each chemical/additive;
d. The frequency (hourly, daily, etc.), duration (hours, days), quantity (maximum and average), and method of application for the chemical/additive;
e. Any material compatibility risks for storage and/or use including the control measures used to minimize such risks; and
f. If available, the vendor's reported aquatic toxicity (NOAEL and/or LC50 in percent for aquatic organism(s)).

3. Has the operator attached an explanation which demonstrates that the addition of such chemicals/additives may be authorized under this general permit in accordance with the instructions in F, above? (check one): ☐ Yes ☐ No; if no, has the operator attached data that demonstrates each of the 126 priority pollutants in CWA Section 307(a) and 40 CFR Part 423.15(j)(1) are non-detect in discharges with the addition of the proposed chemical/additive?
(check one): ☐ Yes ☐ No

G. Endangered Species Act eligibility determination

1. Indicate under which criterion the discharge(s) is eligible for coverage under this general permit:

■ **FWS Criterion A**: No endangered or threatened species or critical habitat are in proximity to the discharges or related activities or come in contact with the "action area".

☐ **FWS Criterion B**: Formal or informal consultation with the FWS under section 7 of the ESA resulted in either a no jeopardy opinion (formal consultation) or a written concurrence by FWS on a finding that the discharges and related activities are "not likely to adversely affect" listed species or critical habitat (informal consultation). Has the operator completed consultation with FWS? (check one): ☐ Yes ☐ No; if no, is consultation underway? (check one): ☐ Yes ☐ No

☐ **FWS Criterion C**: Using the best scientific and commercial data available, the effect of the discharges and related activities on listed species and critical habitat have been evaluated. Based on those evaluations, a determination is made by EPA, or by the operator and affirmed by EPA, that the discharges and related activities will have "no effect" on any federally threatened or endangered listed species or designated critical habitat under the jurisdiction of the FWS. This determination was made by: (check one) ☐ the operator ☐ EPA ☐ Other; if so, specify:

☐ **NMFS Criterion**: A determination made by EPA is affirmed by the operator that the discharges and related activities will have "no effect" or are "not likely to adversely affect" any federally threatened or endangered listed species or critical habitat under the jurisdiction of NMFS and will not result in any take of listed species. Has the operator previously completed consultation with NMFS? (check one): ☐ Yes ☐ No

2. Has the operator attached supporting documentation of ESA eligibility in accordance with the instructions in Appendix I, and G, above? (check one): ■ Yes ☐ No

Refer to **Attachment C**

Does the supporting documentation include any written concurrence or finding provided by the Services? (check one): ☐ Yes ■ No; if yes, attach.

H. National Historic Preservation Act eligibility determination

1. Indicate under which criterion the discharge(s) is eligible for coverage under this general permit:

■ **Criterion A**: No historic properties are present. The discharges and discharge-related activities (e.g., BMPs) do not have the potential to cause effects on historic properties.

☐ **Criterion B**: Historic properties are present. Discharges and discharge related activities do not have the potential to cause effects on historic properties.

☐ **Criterion C**: Historic properties are present. The discharges and discharge-related activities have the potential to have an effect or will have an adverse effect on historic properties.

2. Has the operator attached supporting documentation of NHPA eligibility in accordance with the instructions in H, above? (check one): ■ Yes ☐ No

Refer to **Attachment D**

Does the supporting documentation include any written agreement with the State Historic Preservation Officer (SHPO), Tribal Historic Preservation Officer (TPHO), or other tribal representative that outlines measures the operator will carry out to mitigate or prevent any adverse effects on historic properties? (check one): ☐ Yes ■ No

I. Supplemental information

Describe any supplemental information being provided with the NOI. Include attachments if required or otherwise necessary.

Figure 1 - Site Plan / Locus Plan
Figure 2 - Sensitive Receptors Plan
Figure 3 - Dewatering Layout
Attachment A – Receiving Water Information
Attachment B – Source Water Information
Attachment C – Endangered Species Information

Has the operator attached data, including any laboratory case narrative and chain of custody used to support the application? (check one): ■ Yes ☐ No

Has the operator attached the certification requirement for the Best Management Practices Plan (BMPP)? (check one): ■ Yes ☐ No

J. Certification requirement

I certify under penalty of law that this document and all attachments were prepared under my direction or supervision in accordance with a system designed to assure that qualified personnel properly gathered and evaluated the information submitted. Based on my inquiry of the person or persons who manage the system, or those persons directly responsible for gathering the information, the information submitted is, to the best of my knowledge and belief, true, accurate, and complete. I have no personal knowledge that the information submitted is other than true, accurate, and complete. I am aware that there are significant penalties for submitting false information, including the possibility of fine and imprisonment for knowing violations.

BMPP certification statement: A BMPP meeting the requirements of this general permit will be developed and implemented upon initiation of discharge per Part 2.5.1.c of the RGP.	
Notification provided to the appropriate State, including a copy of this NOI, if required.	Check one: Yes ■ No ☐
Notification provided to the municipality in which the discharge is located, including a copy of this NOI, if requested.	Check one: Yes ■ No ☐
Notification provided to the owner of a private or municipal storm sewer system, if such system is used for site discharges, including a copy of this NOI, if requested.	Check one: Yes ☐ No ☐ NA ■
Permission obtained from the owner of a private or municipal storm sewer system, if such system is used for site discharges. If yes, attach additional conditions. If no, attach explanation and timeframe for obtaining permission.	Check one: Yes ☐ No ☐ NA ■
Notification provided to the owner/operator of the area associated with activities covered by an additional discharge permit(s). Additional discharge permit is (check one): ☐ RGP ☐ DGP ☐ CGP ■ MSGP ☐ Individual NPDES permit ☐ Other; if so, specify:	Check one: Yes ■ No ☐ NA ☐
Signature:	Date: 6/27/19
Print Name and Title: Kurt Nelson, Senior Permitting Specialist	

Attachment A – Analytical Laboratory Results (Aluminum)

Eastern Analytical, Inc.

professional laboratory and drilling services

Deborah Zarta-Gier
GZA GeoEnvironmental, Inc. (NH)
5 Commerce Park North, Suite 201
Bedford , NH 03110

Subject: Laboratory Report

Eastern Analytical, Inc. ID: 197054
Client Identification: Frink Farm / 04.0190842.01
Date Received: 6/25/2019

Dear Ms. Zarta-Gier :

Enclosed please find the laboratory report for the above identified project. All analyses were performed in accordance with our QA/QC Program. Unless otherwise stated, holding times, preservation techniques, container types, and sample conditions adhered to EPA Protocol. Samples which were collected by Eastern Analytical, Inc. (EAI) were collected in accordance with approved EPA procedures. Eastern Analytical, Inc. certifies that the enclosed test results meet all requirements of NELAP and other applicable state certifications. Please refer to our website at www.easternanalytical.com for a copy of our NELAP certificate and accredited parameters.

The following standard abbreviations and conventions apply to all EAI reports:

Solid samples are reported on a dry weight basis, unless otherwise noted
< : "less than" followed by the reporting limit
> : "greater than" followed by the reporting limit
%R : % Recovery

Eastern Analytical Inc. maintains certification in the following states: Connecticut (PH-0492), Maine (NH005), Massachusetts (M-NH005), New Hampshire/NELAP (1012), Rhode Island (269), Vermont (VT1012) and New York (12072).

The following information is contained within this report: Sample Conditions summary, Analytical Results/Data, Quality Control data (if requested) and copies of the Chain of Custody. This report may not be reproduced except in full, without the the written approval of the laboratory.

If you have any questions regarding the results contained within, please feel free to directly contact me or the chemist(s) who performed the testing in question. Unless otherwise requested, we will dispose of the sample (s) 30 days from the sample receipt date.

We appreciate this opportunity to be of service and look forward to your continued patronage.

Sincerely,

Lorraine Olashaw, Lab Director	6-26-19 Date	4 # of pages (excluding cover letter)

SAMPLE CONDITIONS PAGE

EAI ID#: **197054**

Client: **GZA GeoEnvironmental, Inc. (NH)**

Client Designation: **Frink Farm / 04.0190842.01**

Temperature upon receipt (°C): 18.5 **Received on ice or cold packs (Yes/No): N**

Acceptable temperature range (°C): 0-6

Lab ID	Sample ID	Date Received	Date Sampled	Sample Matrix	% Dry Weight	Exceptions/Comments (other than thermal preservation)
197054.01	MW-B101	6/25/19	6/25/19	Acid Soluble		Adheres to Sample Acceptance Policy
197054.02	MW-B102	6/25/19	6/25/19	Acid Soluble		Adheres to Sample Acceptance Policy
197054.03	SW-1	6/25/19	6/25/19	Acid Soluble		Adheres to Sample Acceptance Policy

Samples were properly preserved and the pH measured when applicable unless otherwise noted. Analysis of solids for pH, Flashpoint, Ignitability, Paint Filter, Corrosivity, Conductivity and Specific Gravity are reported on an "as received" basis.
Immediate analyses, pH, Total Residual Chlorine, Dissolved Oxygen and Sulfite, performed at the laboratory were run outside of the recommended 15 minute hold time.
All results contained in this report relate only to the above listed samples.
References include:
1) EPA 600/4-79-020, 1983
2) Standard Methods for Examination of Water and Wastewater, 20th, 21st, 22nd & 23rd Edition or noted Revision year.
3) Test Methods for Evaluating Solid Waste SW 846 3rd Edition including updates IVA and IVB
4) Hach Water Analysis Handbook, 4th edition, 1992

LABORATORY REPORT

EAI ID#: **197054**

Client: **GZA GeoEnvironmental, Inc. (NH)**

Client Designation: **Frink Farm / 04.0190842.01**

Sample ID:	MW-B101	MW-B102	SW-1						
Lab Sample ID:	197054.01	197054.02	197054.03						
Matrix:	Acid Soluble	Acid Soluble	Acid Soluble						
Date Sampled:	6/25/19	6/25/19	6/25/19						
Date Received:	6/25/19	6/25/19	6/25/19	**RL**	**Analytical Matrix**	**Units**	**Analysis Date**	**Method**	**Analyst**
Aluminum	**0.01**	< 0.01	< 0.01	0.01	AcSolubl	mg/L	6/26/19	200.8	HEH

QC REPORT

EAI ID#: **197054**

Client: **GZA GeoEnvironmental, Inc. (NH)**

Client Designation: **Frink Farm / 04.0190842.01**

Parameter Name	Blank	LCS	LCSD		Units	Date of Analysis	Limits	RPD	Method
Aluminum	< 0.05	11 (96 %R)		NA	mg/L	6/26/19	85 - 115	20	200.8

Samples were analyzed within holding times unless noted on the sample results page.
Instrumentation was calibrated in accordance with the method requirements.
The method blanks were free of contamination at the reporting limits.
The associated matrix spikes and/or Laboratory Control Samples met the above stated criteria.
Exceptions to the above statements are flagged or noted above or on the QC Narrative page.
*/! Flagged analyte recoveries deviated from the QA/QC limits.

Page 1 of 1

Chain-of-Custody Record

For 197054

Bold Fields Required. Please Circle Requested Analysis.

Sample I.D.	Sampling Date / Time *If Composite, Indicate Both Start & Finish Date / Time	Matrix (see below)	Grab/*Composite	VOC: 524.2 524.2 BTEX / 524.2 MTBE only	VOC: 8260 624 / VTICs 1, 4 Dioxane	VOC: 8021 BTEX / HALOS	VOC: 8015 GRO / MAVPH	SVOC: 8270 625 / SVTICs EDB DBCP ABN A BN PAH	SVOC: TPH8100 L1 L2	SVOC: 8015 DRO / MAEPH	SVOC: PEST 608 / PCB 608 PEST 8081 / PCB 8082	SVOC: Oil & Grease 1664 / TPH 1664	TCLP: TCLP 1311 / ABN Metals VOC Pest Herb	Metals: Dissolved Metals (list below)	Metals: Total Metals (list below)	Inorganics: TS TSS TDS Spec. Con.	Inorganics: Br Cl F SO_4 NO_2 NO_3 NO_2NO_2	Inorganics: BOD CBOD T. Alk.	Inorganics: TKN NH_3 T. Phos. O. Phos.	Inorganics: pH T. Res. Chlorine	Inorganics: COD Phenols TOC DOC	Inorganics: Total Cyanide Total Sulfide	Inorganics: Reactive Cyanide Reactive Sulfide Flashpoint Ignitability	Micro: Total Coliform E. Coli Fecal Coliform	Micro: Enterococci Heterotrophic Plate Count	Other: Acid-Soluble Al	Other	Other	# of Containers	Notes MeOH Vial #
MW-B101	6-~~24~~ 25-19 / 1040																									X			1	
MW-B102	↓ / 1120																									X			1	
SW-1	↓ / 1025																									X			1	

Matrix: A-Air; S-Soil; GW-Ground Water; SW-Surface Water; DW-Drinking Water; WW-Waste water

Preservative: H-HCL; N-HNO_3; S-H_2SO_4; Na-NaOH; M-MEOH

Project Manager: D. Zarta Gier

Company: GZA

Address: 5 Commerce Park N.

City: Bedford State: NH Zip: 03110

Phone: 603-232-8731 Ext.:

Fax:

E-Mail: deborah.zartagier@gza.com

Site Name: Fink Farm

Project #: 04.0190842.01

State: NH MA ME VT Other:

Regulatory Program: NPDES: RGP POTW Stormwater or GWP, Oil Fund, Brownfield or Other:

Quote #: PO #:

Date Needed: 6-26-19 (or earlier)

QA/QC Reporting Level: A B C OR MA MCP

Reporting Options: Prelims: Yes or No

Electronic Options: E-Mail PDF Equis Excel

Temp. 18.5 °C

Ice? Yes No

Sampler(s): M. Murphy 6-25-19

Relinquished By: Meeper Mb Date: ~~6-24-19~~ Time: 1310 Received By:

Relinquished By: Date: Time: Received By:

Relinquished By: Date: Time: Received By:

Metals: 8 RCRA 13 PP Fe, Mn Pb, Cu

Other Metals: AL

Samples Field Filtered? ☐ Yes ☐ No

Notes: (ie: Special Detection Limits, Billing Info, If Different)

field-filtered

*Date sampled per customer

Site History:

Suspected Contamination:

Field Readings:

Eastern Analytical, Inc.
professional laboratory and drilling services

25 Chenell Drive | Concord, NH 03301 | Tel: 603.228.0525 | 1.800.287.0525 | E-Mail: CustomerService@EasternAnalytical.com | www.EasternAnalytical.com

(WHITE: Original GREEN: Project Manager)

Attachment B – Flow and Effluent Calculations

I. Dilution Factor

Calculated
Data Entry

A. 7Q10 Estimate using the Dingman Equation for ungaged streams:

$$\widehat{L7Q10} = -2.22 + 1.25 \cdot LA + (4.00 \times 10^{-4}) \cdot Y + 1.49 \cdot D. \quad (12)$$

$$\widehat{7Qt} = 10^{L7\hat{Q}t}. \quad (13)$$

Where:
LA = Base-10 Logarithm of Drainage Area (sq mi)
Y = Mean Drainage-Basin Elevation, (ft a.s.l.)
D = Fraction of Basin Covered with Coarse-Grained Stratified Drift in Contact with Streams

Source: Dingman, S.L., and Lawlor, S.C. 1995. Estimating Low-Flow Quantiles from Drainage-Basin Characteristics in New Hampshire and Vermont. American Water Resources Association, Water Resources Bulletin: pp 243-256

I.A.3 7Q10 Estimate

A =	0.04	sq mi	LA =	-1.3565	sq mi
Y =	75	ft			
D =	0.45				
L7Q10 =	-3.2151842				
7Q10 =	0.000602	cfs			

B. Dilution Factor:

1. The equation used to calculate the dilution factor is:

$$\frac{Q_S + Q_D}{Q_D} \times 0.9$$

Where:
Q_S = 7Q10 in million gallons per day (MGD)
Q_D = Discharge flow in MGD
0.9 = Factor to reserve 10 percent of the receiving water's assimilative capacity

Q_S =	0.000602	cfs	x 0.6463	MGD/cfs =	0.000389	MGD	
Q_D = [1]	8	gpm	x 60*10	4800	gal/day	0.0048	MGD

1. Q_D value determined by the designed treatment system estimated maximum flow volume
2. Anticipating 10 hour work days during which discharge will occur.

Knight's Brook		
Q_S	0.0004	MGD
Q_D	0.0048	MGD

Dilution Factor	Knight's Brook
1	

Enter number values in green boxes below

Enter values in the units specified

↓

0.0384	Q_R = Enter upstream flow in **MGD**
0.0048	Q_P = Enter discharge flow in **MGD**
0.0006	Downstream 7Q10

Enter a dilution factor, if other than zero

↓

1

Enter values in the units specified

↓

20	C_d = Enter influent hardness in **mg/L** $CaCO_3$
166	C_s = Enter receiving water hardness in **mg/L** $CaCO_3$

Enter **receiving water** concentrations in the units specified

↓

7.1	pH in **Standard Units**
19.0	Temperature in **°C**
0	Ammonia in **µg/L**
166	Hardness in **mg/L** $CaCO_3$
0	Salinity in **ppt**
0	Antimony in **µg/L**
0	Arsenic in **µg/L**
0	Cadmium in **µg/L**
0	Chromium III in **µg/L**
0	Chromium VI in **µg/L**
0	Copper in **µg/L**
185	Iron in **µg/L**
0	Lead in **µg/L**
0	Mercury in **µg/L**
0	Nickel in **µg/L**
0	Selenium in **µg/L**
0	Silver in **µg/L**
0	Zinc in **µg/L**

Notes:

Freshwater: critical low flow equal to the 7Q10; enter alternate low flow if approved by the State

Saltwater (estuarine and marine): enter critical low flow if approved by the State; enter 0 if no entry

Discharge flow is equal to the design flow or 1 MGD, whichever is less

Optional entry for Q_r; leave 0 if no entry

Saltwater (estuarine and marine): only if approved by the State

Leave 0 if no entry

pH, temperature, and ammonia required for all discharges

Hardness required for freshwater

Salinity required for saltwater (estuarine and marine)

Metals required for all discharges if present and if dilution factor is > 1

Enter 0 if non-detect or testing not required

Enter **influent** concentrations in the units specified

if >1 sample, enter maximum

if >10 samples, may enter 95th percentile

Enter 0 if non-detect or testing not required

↓	
0	TRC in **µg/L**
0	Ammonia in **mg/L**
0	Antimony in **µg/L**
0.29	Arsenic in **µg/L**
0	Cadmium in **µg/L**
0	Chromium III in **µg/L**
0	Chromium VI in **µg/L**
0	Copper in **µg/L**
158	Iron in **µg/L**
0	Lead in **µg/L**
0	Mercury in **µg/L**
1.01	Nickel in **µg/L**
0	Selenium in **µg/L**
0	Silver in **µg/L**
0	Zinc in **µg/L**
0	Cyanide in **µg/L**
0	Phenol in **µg/L**
0	Total Dichlorobenzene in **µg/L**
0	Total Phthalates in **µg/L**
0	Diethylhexylphthalate in **µg/L**
0	Benzo(a)anthracene in **µg/L**
0	Benzo(a)pyrene in **µg/L**
0	Benzo(b)fluoranthene in **µg/L**
0	Benzo(k)fluoranthene in **µg/L**
0	Chrysene in **µg/L**
0	Dibenzo(a,h)anthracene in **µg/L**
0	Indeno(1,2,3-cd)pyrene in **µg/L**

I. Dilution Factor Calculation Method

A. 7Q10

Refer to Appendix V for determining critical low flow; must be approved by State before use in calculations.

B. Dilution Factor

Calculated as follows:

$$Df = \frac{Q_R + Q_P}{Q_P} \times 0.9$$

Q_R = 7Q10 in MGD

Q_P = Discharge flow, in MGD

0.9 = Factor to reserve 10% of the receiving water's assimilitive capacity

II. Effluent Limitation Calculation Method

A. Calculate Water Quality Criterion:

Step 1. Downstream hardness, calculated as follows:

$$C_r = \frac{Q_d C_d + Q_s C_s}{Q_r}$$

C_r = Downstream hardness in mg/L

Q_d = Discharge flow in MGD

C_d = Discharge hardness in mg/L

Q_s = Upstream flow (7Q10) in MGD

C_s = Upstream (receiving water) hardness in mg/L

Q_r = Downstream receiving water flow in MGD

Step 2. Total recoverable water quality criteria for hardness-dependent metals, calculated as follows:

Total Recoverable Criteria = $\exp\{m_c [\ln(h)] + b_c\}$

m_c = Pollutant-specific coefficient (m_a for silver)

b_c = Pollutant-specific coefficient (b_a for silver)

ln = Natural logarithm

h = Hardness calculated in Step 1

Step 3. Total recoverable water quality criteria for non-hardness-dependent metals, calculated as follows:

$$\text{WQC in µg/L} = \frac{\text{dissolved WQC in µg/L}}{\text{dissolved to total recoverable factor}}$$

B. Calculate WQBEL:

Step 1. WQBEL calculated as follows for parameter sampled in and detected in the receiving water:

$$C_d = \frac{[Q_r (C_r \times 0.9) - Q_s C_s]}{Q_d}$$

C_r = Water quality criterion in µg/L

Q_d = Discharge flow in MGD

C_d = WQBEL in µg/L

Q_s = Upstream flow (7Q10) in MGD

C_s = Ustream (receiving water) concentration in µg/L

Q_r = Downstream receiving water flow in MGD

0.9 = Factor to reserve 10% of the receiving water's assimilitive capacity

Step 2. WQBEL calculated as follows for parameter not sampled in or not detected in receiving water:

$$C_d = (Q_r/Q_d) \times C_r \times 0.9$$

C_r = Water quality criterion in µg/L
Q_d = Discharge flow in MGD
Q_r = Downstream receiving water flow in MGD
0.9 = Factor to reserve 10% of the receiving water's assimilitive capacity

C. Determine if a WQBEL applies:

Step 1. For parameter sampled in and detected in receiving water, downstream concentrations calculated as follows:

$$C_r = \frac{Q_d C_d + Q_s C_s}{Q_r}$$

C_r = Downstream concentration in µg/L
Q_d = Discharge flow in MGD
C_d = Influent concentration in µg/L
Q_s = Upstream flow (7Q10) in MGD
C_s = Upstream (receiving water) concentration in µg/L
Q_r = Downstream receiving water flow in MGD

The WQBEL applies if:

1) the projected downstream concentration calculated in accordance with Step 1, above, and the discharge concentration of a parameter are greater than the WQC calculated for that parameter in accordance with II.A, above

AND

2) the WQBEL determined for that parameter in accordance with II.B, above, is less than the TBEL in Part 2.1.1 of the RGP for that parameter. Otherwise, the TBEL in Part 2.1.1 of the RGP for that parameter applies.

Step 2. For a parameter not sampled in or not detected in receiving water, the WQBEL applies if:

1) the discharge concentration of a parameter is greater than the WQBEL determined for that parameter in accordance with II.A or II.B, above;

AND

2) the WQBEL determined for that parameter in accordance with II.A or II.B, above is less than the TBEL in Part 2.1.1 of the RGP for that parameter. Otherwise, the TBEL in Part 2.1.1 of the RGP for that parameter applies.

Dilution Factor	8.1					
A. Inorganics	TBEL applies if bolded		WQBEL applies if bolded		Compliance Level applies if shown	
Ammonia	**Report**	mg/L	---			
Chloride	**Report**	µg/L	---			
Total Residual Chlorine	0.2	mg/L	**11**	µg/L	50	µg/L
Total Suspended Solids	**30**	mg/L	---			
Antimony	**206**	µg/L	4.3	mg/L		
Arsenic	**104**	µg/L	10	µg/L		
Cadmium	**10.2**	µg/L	8.6786	µg/L		
Chromium III	**323**	µg/L	3983.4	µg/L		
Chromium VI	**323**	µg/L	11.4	µg/L		
Copper	**242**	µg/L	509.1	µg/L		
Iron	**5000**	µg/L	1000	µg/L		
Lead	**160**	µg/L	1231.33	µg/L		
Mercury	**0.739**	µg/L	0.91	µg/L		
Nickel	**1450**	µg/L	2735.9	µg/L		
Selenium	**235.8**	µg/L	5.0	µg/L		
Silver	**35.1**	µg/L	11868.1	µg/L		
Zinc	**420**	µg/L	6322.5	µg/L		
Cyanide	**178**	mg/L	5.2	µg/L	---	µg/L
B. Non-Halogenated VOCs						
Total BTEX	**100**	µg/L	---			
Benzene	**5.0**	µg/L	---			
1,4 Dioxane	**200**	µg/L	---			
Acetone	**7970**	µg/L	---			
Phenol	**1,080**	µg/L	300	µg/L		

C. Halogenated VOCs						
Carbon Tetrachloride	**4.4**	µg/L	---			
1,2 Dichlorobenzene	**600**	µg/L	---			
1,3 Dichlorobenzene	**320**	µg/L	---			
1,4 Dichlorobenzene	**5.0**	µg/L	---			
Total dichlorobenzene	**---**	µg/L	---			
1,1 Dichloroethane	**70**	µg/L	---			
1,2 Dichloroethane	**5.0**	µg/L	---			
1,1 Dichloroethylene	**3.2**	µg/L	---			
Ethylene Dibromide	**0.05**	µg/L	---			
Methylene Chloride	**4.6**	µg/L	---			
1,1,1 Trichloroethane	**200**	µg/L	---			
1,1,2 Trichloroethane	**5.0**	µg/L	---			
Trichloroethylene	**5.0**	µg/L	---			
Tetrachloroethylene	**5.0**	µg/L	---			
cis-1,2 Dichloroethylene	**70**	µg/L	---			
Vinyl Chloride	**2.0**	µg/L	---			
D. Non-Halogenated SVOCs						
Total Phthalates	**190**	µg/L	3.0	µg/L		
Diethylhexyl phthalate	**101**	µg/L	2.2	µg/L		
Total Group I Polycyclic Aromatic Hydrocarbons	**1.0**	µg/L	---			
Benzo(a)anthracene	**1.0**	µg/L	0.0038	µg/L	---	µg/L
Benzo(a)pyrene	**1.0**	µg/L	0.0038	µg/L	---	µg/L
Benzo(b)fluoranthene	**1.0**	µg/L	0.0038	µg/L	---	µg/L
Benzo(k)fluoranthene	**1.0**	µg/L	0.0038	µg/L	---	µg/L
Chrysene	**1.0**	µg/L	0.0038	µg/L	---	µg/L
Dibenzo(a,h)anthracene	**1.0**	µg/L	0.0038	µg/L	---	µg/L
Indeno(1,2,3-cd)pyrene	**1.0**	µg/L	0.0038	µg/L	---	µg/L
Total Group II Polycyclic Aromatic Hydrocarbons	**100**	µg/L	---			
Naphthalene	**20**	µg/L	---			

E. Halogenated SVOCs					
Total Polychlorinated Biphenyls	**0.000064**	µg/L	---	0.5	µg/L
Pentachlorophenol	**1.0**	µg/L	---		
F. Fuels Parameters					
Total Petroleum Hydrocarbons	**5.0**	mg/L	---		
Ethanol	**Report**	mg/L	---		
Methyl-tert-Butyl Ether	**70**	µg/L	---		
tert-Butyl Alcohol	**120**	µg/L	---		
tert-Amyl Methyl Ether	**90**	µg/L	---		

Attachment C – Analytical Laboratory Results
(Soil VOCs, SVOCs, TPH, and PCBs)

Table 1. Laboratory Testing Results - Soil
Darius Frink Farm
Eversource NH Seacoast Reliability Project
Newington, New Hampshire

					B101		B102		B103	
					S1-S2	S3-S4	S1-S2	S3-S4	S1-S2	S3-S4
					8/26/2016		8/26/2016		8/26/2016	
					0-4	4-8	0-4	4-6.8	0-4	4-8
Analyte	**Method**	**Units**	**NH S-1**	**NHDES Background**						
Perflourinated Compounds (PFCs)	537	ng/g								
Perfluorooctanoic Acid (PFOA)			NS	NS	< 1.96	< 1.96	< 1.95	< 1.95	< 1.93	< 2.02
Perfluorooctane Sulfanate (PFOS)			NS	NS	< 1.96	< 1.96	< 1.95	< 1.95	< 1.93	< 2.02
Volatile Organic Compounds (VOCs)	8260C	mg/kg								
Total VOCs			NS	NS	ND	ND	ND	ND	ND	ND
Semi-Volatile Organic Compounds (SVOCs)	8270D	mg/kg								
Total SVOCs			NS	NS	ND	ND	ND	ND	ND	ND
Total Petroleum Hydrocarbons (TPH)	8015	mg/kg								
Total Petroleum Hydrocarbons			10000	NS	39.0	< 39.8	< 39.5	< 39.9	< 35.5	< 34.1
Polychlorinated Biphenyls (PCBs)	8082A	mg/kg								
Total PCBs			1	NS	ND	ND	ND	ND	ND	ND
Total Metals		mg/kg								
Arsenic	6010C		11	11	7.4	5.6	**12**	**12**	9.0	7.1
Barium	6010C		1,000	NS	28	33	44	31	30	18
Cadmium	6010C		33	2	< 0.47	< 0.48	< 0.47	< 0.49	< 0.42	< 0.42
Chromium (Total)	6010C		1,000	33	14 F-,G	16 F-,G	19 F-,G	18 F-,G	30 F-,G	26 F-,G
Lead	6010C		400	51	5.7 F-	4.6 F-	6.8 F-	8.9 F-	7.2 F-	8.6 F-
Mercury	7471B		7	0.3	< 0.08	< 0.08	< 0.08	< 0.08	< 0.07	< 0.07
Selenium	6010C		180	5	< 0.94	< 0.96	< 0.94	< 0.98	< 0.85	< 0.84
Silver	6010C		89	NS	< 0.47	< 0.48	< 0.47	< 0.49	< 0.42	< 0.42
Other										
Conductivity	EPA 120.1M	umhos/cm	NS	NS	< 10	< 10	< 10	28 G	< 10	44 G
Corrosivity (pH)	9045D	S.U.	NS	NS	6.2 A	6.4 A	6.3 A	7.4 A	5.7 A	0.3
Oxidation-Reduction Potential	ASTM D1498-76M	mv	NS	NS	180 A	170 A	170 A	190 A	170 A	150 A
Flashpoint	1030	deg F	NS	NS	NI	NI	NI	NI	NI	NI
Reactive Cyanide	CHAP7	mg/kg	NS	NS	< 10	< 10	< 10	< 10	< 10	< 10
Reactive Sulfide	CHAP7	mg/kg	NS	NS	< 10	< 10	< 10	< 10	< 10	< 10
Percent Solids	SM 2540G-97 MOD	%	NS	NS	84.2	80.9	83.6	79.2	93.3	92.4

General Notes:
1. In general, analytes detected in at least one sample are reported here. For a complete list of analytes see the laboratory data sheets.
2. "<" = The analyte was not detected at a concentration above the specified laboratory reporting limit.
3. NH S-1 and NHDES Background standards from The New Hampshire Code of Administrative Rules, Chapter Env-Or 600 - Contaminated Site Management.
4. Values in bold exceed the NH S-1 and/or NDHES Background values.
5. NS = No standard or criteria has been established for this analyte.
6. NI = Not Ignitable
7. ND = Not detected.
8. Soil samples for VOC analysis were preserved in the field with methanol.
10. mg/kg = milligrams per kilogram.
9. umhos/cm = micromhos per centimeter.
10. S.U. = standard units.
11. mv = millivolts.
12. deg F = degrees Fahrenheit.
13. ng/g = nanograms per gram.

Qualifying Notes:
A The result is estimated due to exceedance of holding time criteria.
F- The result has a low bias due to matrix spike recovery below lower control limits.
G The result is estimated due to duplicate precision outside control limits.

Table 2. Laboratory Testing Results - Groundwater and Surface Water
Darius Frink Farm
Eversource NH Seacoast Reliability Project
Newington, New Hampshire

			Sample Location:	1607530-B101(MW)		1607530-B102(MW)		1607530-B103(MW)	1607530-SW1
			Sample Date:	9/1/2016	6/2/2017	9/1/2016	6/2/2017	6/2/2017	9/1/2016
			Screen Interval:	2-8'	2-8'	2-7'	2-7'	2-8'	NA
Analyte	**Method**	**Units**	**NH AGQS**						
Perflourinated Compounds (PFCs)	537	ug/L							
Perfluorooctanoic Acid (PFOA)			0.07	< 0.00786	0.00248	0.0112	0.00711	< 0.00185	**0.842**
Perfluorooctane Sulfanate (PFOS)			0.07	< 0.00786	0.00305	0.0161	0.0142	0.00187	**2.91**
Total PFCs			0.07	ND	0.00553	0.0273	0.02131	0.00187	**3.752**

General Notes:

1. In general, analytes detected in at least one sample are reported here. For a complete list of analytes see the laboratory data sheets.
2. "<" = The analyte was not detected at a concentration above the specified laboratory reporting limit.
3. NH AGQS = New Hampshire Ambient Groundwater Quality Standards
4. NH AGQS for PFOA and PFOS from Emergency Rule 05-31-16 to Amend The New Hampshire Code of Administrative Rules Env-OR 603.03(b), eff 6-1-15
5. Values in bold exceed the NH AGQS values.
6. ND = Not detected.
7. ug/L = milligrams per liter.

ANALYTICAL REPORT

Lab Number:	L1627010
Client:	GEI Consultants 400 Unicorn Park Drive Woburn, MA 01801
ATTN:	Mike Sabulis
Phone:	(781) 721-4114
Project Name:	EVERSOURCE NH SRP
Project Number:	1607530
Report Date:	09/15/16

The original project report/data package is held by Alpha Analytical. This report/data package is paginated and should be reproduced only in its entirety. Alpha Analytical holds no responsibility for results and/or data that are not consistent with the original.

Certifications & Approvals: MA (M-MA086), NY (11148), CT (PH-0574), NH (2003), NJ NELAP (MA935), RI (LAO00065), ME (MA00086), PA (68-03671), VA (460195), MD (348), IL (200077), NC (666), TX (T104704476), DOD (L2217), USDA (Permit #P-330-11-00240).

Eight Walkup Drive, Westborough, MA 01581-1019
508-898-9220 (Fax) 508-898-9193 800-624-9220 - www.alphalab.com

Project Name: EVERSOURCE NH SRP
Project Number: 1607530

Lab Number: L1627010
Report Date: 09/15/16

Alpha Sample ID	Client ID	Matrix	Sample Location	Collection Date/Time	Receive Date
L1627010-01	1607530-B103(S1-S2)	SOIL	NEWINGTON, NH	08/26/16 09:25	08/29/16
L1627010-02	1607530-B103(S3-S4)	SOIL	NEWINGTON, NH	08/26/16 09:55	08/29/16
L1627010-03	1607530-B102(S1-S2)	SOIL	NEWINGTON, NH	08/26/16 10:45	08/29/16
L1627010-04	1607530-B102(S3-S4)	SOIL	NEWINGTON, NH	08/26/16 11:00	08/29/16
L1627010-05	1607530-B101(S1-S2)	SOIL	NEWINGTON, NH	08/26/16 11:45	08/29/16
L1627010-06	1607530-B101(S3-S4)	SOIL	NEWINGTON, NH	08/26/16 12:00	08/29/16

Project Name: EVERSOURCE NH SRP **Lab Number:** L1627010
Project Number: 1607530 **Report Date:** 09/15/16

Case Narrative

The samples were received in accordance with the Chain of Custody and no significant deviations were encountered during the preparation or analysis unless otherwise noted. Sample Receipt, Container Information, and the Chain of Custody are located at the back of the report.

Results contained within this report relate only to the samples submitted under this Alpha Lab Number and meet NELAP requirements for all NELAP accredited parameters unless otherwise noted in the following narrative. The data presented in this report is organized by parameter (i.e. VOC, SVOC, etc.). Sample specific Quality Control data (i.e. Surrogate Spike Recovery) is reported at the end of the target analyte list for each individual sample, followed by the Laboratory Batch Quality Control at the end of each parameter. Tentatively Identified Compounds (TICs), if requested, are reported for compounds identified to be present and are not part of the method/program Target Compound List, even if only a subset of the TCL are being reported. If a sample was re-analyzed or re-extracted due to a required quality control corrective action and if both sets of data are reported, the Laboratory ID of the re-analysis or re-extraction is designated with an "R" or "RE", respectively. When multiple Batch Quality Control elements are reported (e.g. more than one LCS), the associated samples for each element are noted in the grey shaded header line of each data table. Any Laboratory Batch, Sample Specific % recovery or RPD value that is outside the listed Acceptance Criteria is bolded in the report. All specific QC information is also incorporated in the Data Usability format of our Data Merger tool where it can be reviewed along with any associated usability implications. Soil/sediments, solids and tissues are reported on a dry weight basis unless otherwise noted. Definitions of all data qualifiers and acronyms used in this report are provided in the Glossary located at the back of the report.

In reference to questions H (CAM) or 4 (RCP) when "NO" is checked, the performance criteria for CAM and RCP methods allow for some quality control failures to occur and still be within method compliance. In these instances the specific failure is not narrated but noted in the associated QC table. The information is also incorporated in the Data Usability format of our Data Merger tool where it can be reviewed along with any associated usability implications.

Please see the associated ADEx data file for a comparison of laboratory reporting limits that were achieved with the regulatory Numerical Standards requested on the Chain of Custody.

HOLD POLICY
For samples submitted on hold, Alpha's policy is to hold samples (with the exception of Air canisters) free of charge for 21 calendar days from the date the project is completed. After 21 calendar days, we will dispose of all samples submitted including those put on hold unless you have contacted your Client Service Representative and made arrangements for Alpha to continue to hold the samples. Air canisters will be disposed after 3 business days from the date the project is completed.

Please contact Client Services at 800-624-9220 with any questions.

Project Name:	EVERSOURCE NH SRP	**Lab Number:**	L1627010
Project Number:	1607530	**Report Date:**	09/15/16

Case Narrative (continued)

Report Submission

This final report replaces the partial report issued September 6, 2016 and includes the results of all requested analyses.

The analyses of PFOA and PFOS by Method 537 were subcontracted. A copy of the laboratory report is included as an addendum. Please note: This data is only available in PDF format and is not available on Data Merger.

I, the undersigned, attest under the pains and penalties of perjury that, to the best of my knowledge and belief and based upon my personal inquiry of those responsible for providing the information contained in this analytical report, such information is accurate and complete. This certificate of analysis is not complete unless this page accompanies any and all pages of this report.

Authorized Signature: Kelly Stenstrom

Title: Technical Director/Representative

Date: 09/15/16

ORGANICS

VOLATILES

Project Name: EVERSOURCE NH SRP **Lab Number:** L1627010

Project Number: 1607530 **Report Date:** 09/15/16

SAMPLE RESULTS

Lab ID:	L1627010-01	Date Collected:	08/26/16 09:25
Client ID:	1607530-B103(S1-S2)	Date Received:	08/29/16
Sample Location:	NEWINGTON, NH	Field Prep:	Not Specified
Matrix:	Soil		
Analytical Method:	1,8260C		
Analytical Date:	09/05/16 12:20		
Analyst:	BN		
Percent Solids:	93%		

Parameter	Result	Qualifier	Units	RL	MDL	Dilution Factor
Volatile Organics by EPA 5035 High - Westborough Lab						
Methylene chloride	ND		ug/kg	610	--	1
1,1-Dichloroethane	ND		ug/kg	92	--	1
Chloroform	ND		ug/kg	92	--	1
Carbon tetrachloride	ND		ug/kg	61	--	1
1,2-Dichloropropane	ND		ug/kg	210	--	1
Dibromochloromethane	ND		ug/kg	61	--	1
1,1,2-Trichloroethane	ND		ug/kg	92	--	1
Tetrachloroethene	ND		ug/kg	61	--	1
Chlorobenzene	ND		ug/kg	61	--	1
Trichlorofluoromethane	ND		ug/kg	300	--	1
1,2-Dichloroethane	ND		ug/kg	61	--	1
1,1,1-Trichloroethane	ND		ug/kg	61	--	1
Bromodichloromethane	ND		ug/kg	61	--	1
trans-1,3-Dichloropropene	ND		ug/kg	61	--	1
cis-1,3-Dichloropropene	ND		ug/kg	61	--	1
1,3-Dichloropropene, Total	ND		ug/kg	61	--	1
1,1-Dichloropropene	ND		ug/kg	300	--	1
Bromoform	ND		ug/kg	240	--	1
1,1,2,2-Tetrachloroethane	ND		ug/kg	61	--	1
Benzene	ND		ug/kg	61	--	1
Toluene	ND		ug/kg	92	--	1
Ethylbenzene	ND		ug/kg	61	--	1
Chloromethane	ND		ug/kg	300	--	1
Bromomethane	ND		ug/kg	120	--	1
Vinyl chloride	ND		ug/kg	120	--	1
Chloroethane	ND		ug/kg	120	--	1
1,1-Dichloroethene	ND		ug/kg	61	--	1
trans-1,2-Dichloroethene	ND		ug/kg	92	--	1
Trichloroethene	ND		ug/kg	61	--	1
1,2-Dichlorobenzene	ND		ug/kg	300	--	1

Project Name: EVERSOURCE NH SRP **Lab Number:** L1627010

Project Number: 1607530 **Report Date:** 09/15/16

SAMPLE RESULTS

Lab ID: L1627010-01 Date Collected: 08/26/16 09:25

Client ID: 1607530-B103(S1-S2) Date Received: 08/29/16

Sample Location: NEWINGTON, NH Field Prep: Not Specified

Parameter	Result	Qualifier	Units	RL	MDL	Dilution Factor
Volatile Organics by EPA 5035 High - Westborough Lab						
1,3-Dichlorobenzene	ND		ug/kg	300	--	1
1,4-Dichlorobenzene	ND		ug/kg	300	--	1
Methyl tert butyl ether	ND		ug/kg	120	--	1
p/m-Xylene	ND		ug/kg	120	--	1
o-Xylene	ND		ug/kg	120	--	1
Xylenes, Total	ND		ug/kg	120	--	1
cis-1,2-Dichloroethene	ND		ug/kg	61	--	1
1,2-Dichloroethene, Total	ND		ug/kg	61	--	1
Dibromomethane	ND		ug/kg	610	--	1
1,4-Dichlorobutane	ND		ug/kg	610	--	1
1,2,3-Trichloropropane	ND		ug/kg	610	--	1
Styrene	ND		ug/kg	120	--	1
Dichlorodifluoromethane	ND		ug/kg	610	--	1
Acetone	ND		ug/kg	2200	--	1
Carbon disulfide	ND		ug/kg	610	--	1
2-Butanone	ND		ug/kg	610	--	1
Vinyl acetate	ND		ug/kg	610	--	1
4-Methyl-2-pentanone	ND		ug/kg	610	--	1
2-Hexanone	ND		ug/kg	610	--	1
Ethyl methacrylate	ND		ug/kg	610	--	1
Acrylonitrile	ND		ug/kg	240	--	1
Bromochloromethane	ND		ug/kg	300	--	1
Tetrahydrofuran	ND		ug/kg	1200	--	1
2,2-Dichloropropane	ND		ug/kg	300	--	1
1,2-Dibromoethane	ND		ug/kg	240	--	1
1,3-Dichloropropane	ND		ug/kg	300	--	1
1,1,1,2-Tetrachloroethane	ND		ug/kg	61	--	1
Bromobenzene	ND		ug/kg	300	--	1
n-Butylbenzene	ND		ug/kg	61	--	1
sec-Butylbenzene	ND		ug/kg	61	--	1
tert-Butylbenzene	ND		ug/kg	300	--	1
o-Chlorotoluene	ND		ug/kg	300	--	1
p-Chlorotoluene	ND		ug/kg	300	--	1
1,2-Dibromo-3-chloropropane	ND		ug/kg	300	--	1
Hexachlorobutadiene	ND		ug/kg	300	--	1
Isopropylbenzene	ND		ug/kg	61	--	1
p-Isopropyltoluene	ND		ug/kg	61	--	1
Naphthalene	ND		ug/kg	300	--	1
n-Propylbenzene	ND		ug/kg	61	--	1

Project Name: EVERSOURCE NH SRP **Lab Number:** L1627010

Project Number: 1607530 **Report Date:** 09/15/16

SAMPLE RESULTS

Lab ID: L1627010-01 Date Collected: 08/26/16 09:25

Client ID: 1607530-B103(S1-S2) Date Received: 08/29/16

Sample Location: NEWINGTON, NH Field Prep: Not Specified

Parameter	Result	Qualifier	Units	RL	MDL	Dilution Factor
Volatile Organics by EPA 5035 High - Westborough Lab						
1,2,3-Trichlorobenzene	ND		ug/kg	300	--	1
1,2,4-Trichlorobenzene	ND		ug/kg	300	--	1
1,3,5-Trimethylbenzene	ND		ug/kg	300	--	1
1,2,4-Trimethylbenzene	ND		ug/kg	300	--	1
trans-1,4-Dichloro-2-butene	ND		ug/kg	300	--	1
Ethyl ether	ND		ug/kg	300	--	1

Surrogate	% Recovery	Qualifier	Acceptance Criteria
1,2-Dichloroethane-d4	97		70-130
Toluene-d8	100		70-130
4-Bromofluorobenzene	98		70-130
Dibromofluoromethane	94		70-130

Project Name: EVERSOURCE NH SRP **Lab Number:** L1627010

Project Number: 1607530 **Report Date:** 09/15/16

SAMPLE RESULTS

Lab ID:	L1627010-02	Date Collected:	08/26/16 09:55
Client ID:	1607530-B103(S3-S4)	Date Received:	08/29/16
Sample Location:	NEWINGTON, NH	Field Prep:	Not Specified
Matrix:	Soil		
Analytical Method:	1,8260C		
Analytical Date:	09/05/16 12:47		
Analyst:	BN		
Percent Solids:	92%		

Parameter	Result	Qualifier	Units	RL	MDL	Dilution Factor
Volatile Organics by EPA 5035 High - Westborough Lab						
Methylene chloride	ND		ug/kg	520	--	1
1,1-Dichloroethane	ND		ug/kg	77	--	1
Chloroform	ND		ug/kg	77	--	1
Carbon tetrachloride	ND		ug/kg	52	--	1
1,2-Dichloropropane	ND		ug/kg	180	--	1
Dibromochloromethane	ND		ug/kg	52	--	1
1,1,2-Trichloroethane	ND		ug/kg	77	--	1
Tetrachloroethene	ND		ug/kg	52	--	1
Chlorobenzene	ND		ug/kg	52	--	1
Trichlorofluoromethane	ND		ug/kg	260	--	1
1,2-Dichloroethane	ND		ug/kg	52	--	1
1,1,1-Trichloroethane	ND		ug/kg	52	--	1
Bromodichloromethane	ND		ug/kg	52	--	1
trans-1,3-Dichloropropene	ND		ug/kg	52	--	1
cis-1,3-Dichloropropene	ND		ug/kg	52	--	1
1,3-Dichloropropene, Total	ND		ug/kg	52	--	1
1,1-Dichloropropene	ND		ug/kg	260	--	1
Bromoform	ND		ug/kg	210	--	1
1,1,2,2-Tetrachloroethane	ND		ug/kg	52	--	1
Benzene	ND		ug/kg	52	--	1
Toluene	ND		ug/kg	77	--	1
Ethylbenzene	ND		ug/kg	52	--	1
Chloromethane	ND		ug/kg	260	--	1
Bromomethane	ND		ug/kg	100	--	1
Vinyl chloride	ND		ug/kg	100	--	1
Chloroethane	ND		ug/kg	100	--	1
1,1-Dichloroethene	ND		ug/kg	52	--	1
trans-1,2-Dichloroethene	ND		ug/kg	77	--	1
Trichloroethene	ND		ug/kg	52	--	1
1,2-Dichlorobenzene	ND		ug/kg	260	--	1

Project Name: EVERSOURCE NH SRP **Lab Number:** L1627010

Project Number: 1607530 **Report Date:** 09/15/16

SAMPLE RESULTS

Lab ID: L1627010-02 Date Collected: 08/26/16 09:55

Client ID: 1607530-B103(S3-S4) Date Received: 08/29/16

Sample Location: NEWINGTON, NH Field Prep: Not Specified

Parameter	Result	Qualifier	Units	RL	MDL	Dilution Factor
Volatile Organics by EPA 5035 High - Westborough Lab						
1,3-Dichlorobenzene	ND		ug/kg	260	--	1
1,4-Dichlorobenzene	ND		ug/kg	260	--	1
Methyl tert butyl ether	ND		ug/kg	100	--	1
p/m-Xylene	ND		ug/kg	100	--	1
o-Xylene	ND		ug/kg	100	--	1
Xylenes, Total	ND		ug/kg	100	--	1
cis-1,2-Dichloroethene	ND		ug/kg	52	--	1
1,2-Dichloroethene, Total	ND		ug/kg	52	--	1
Dibromomethane	ND		ug/kg	520	--	1
1,4-Dichlorobutane	ND		ug/kg	520	--	1
1,2,3-Trichloropropane	ND		ug/kg	520	--	1
Styrene	ND		ug/kg	100	--	1
Dichlorodifluoromethane	ND		ug/kg	520	--	1
Acetone	ND		ug/kg	1800	--	1
Carbon disulfide	ND		ug/kg	520	--	1
2-Butanone	ND		ug/kg	520	--	1
Vinyl acetate	ND		ug/kg	520	--	1
4-Methyl-2-pentanone	ND		ug/kg	520	--	1
2-Hexanone	ND		ug/kg	520	--	1
Ethyl methacrylate	ND		ug/kg	520	--	1
Acrylonitrile	ND		ug/kg	210	--	1
Bromochloromethane	ND		ug/kg	260	--	1
Tetrahydrofuran	ND		ug/kg	1000	--	1
2,2-Dichloropropane	ND		ug/kg	260	--	1
1,2-Dibromoethane	ND		ug/kg	210	--	1
1,3-Dichloropropane	ND		ug/kg	260	--	1
1,1,1,2-Tetrachloroethane	ND		ug/kg	52	--	1
Bromobenzene	ND		ug/kg	260	--	1
n-Butylbenzene	ND		ug/kg	52	--	1
sec-Butylbenzene	ND		ug/kg	52	--	1
tert-Butylbenzene	ND		ug/kg	260	--	1
o-Chlorotoluene	ND		ug/kg	260	--	1
p-Chlorotoluene	ND		ug/kg	260	--	1
1,2-Dibromo-3-chloropropane	ND		ug/kg	260	--	1
Hexachlorobutadiene	ND		ug/kg	260	--	1
Isopropylbenzene	ND		ug/kg	52	--	1
p-Isopropyltoluene	ND		ug/kg	52	--	1
Naphthalene	ND		ug/kg	260	--	1
n-Propylbenzene	ND		ug/kg	52	--	1

Project Name: EVERSOURCE NH SRP **Lab Number:** L1627010

Project Number: 1607530 **Report Date:** 09/15/16

SAMPLE RESULTS

Lab ID: L1627010-02 Date Collected: 08/26/16 09:55

Client ID: 1607530-B103(S3-S4) Date Received: 08/29/16

Sample Location: NEWINGTON, NH Field Prep: Not Specified

Parameter	Result	Qualifier	Units	RL	MDL	Dilution Factor
Volatile Organics by EPA 5035 High - Westborough Lab						
1,2,3-Trichlorobenzene	ND		ug/kg	260	--	1
1,2,4-Trichlorobenzene	ND		ug/kg	260	--	1
1,3,5-Trimethylbenzene	ND		ug/kg	260	--	1
1,2,4-Trimethylbenzene	ND		ug/kg	260	--	1
trans-1,4-Dichloro-2-butene	ND		ug/kg	260	--	1
Ethyl ether	ND		ug/kg	260	--	1

Surrogate	% Recovery	Qualifier	Acceptance Criteria
1,2-Dichloroethane-d4	99		70-130
Toluene-d8	100		70-130
4-Bromofluorobenzene	98		70-130
Dibromofluoromethane	94		70-130

Project Name: EVERSOURCE NH SRP **Lab Number:** L1627010

Project Number: 1607530 **Report Date:** 09/15/16

SAMPLE RESULTS

Lab ID:	L1627010-03	Date Collected:	08/26/16 10:45
Client ID:	1607530-B102(S1-S2)	Date Received:	08/29/16
Sample Location:	NEWINGTON, NH	Field Prep:	Not Specified
Matrix:	Soil		
Analytical Method:	1,8260C		
Analytical Date:	09/05/16 13:13		
Analyst:	BN		
Percent Solids:	84%		

Parameter	Result	Qualifier	Units	RL	MDL	Dilution Factor
Volatile Organics by EPA 5035 High - Westborough Lab						
Methylene chloride	ND		ug/kg	650	--	1
1,1-Dichloroethane	ND		ug/kg	97	--	1
Chloroform	ND		ug/kg	97	--	1
Carbon tetrachloride	ND		ug/kg	65	--	1
1,2-Dichloropropane	ND		ug/kg	230	--	1
Dibromochloromethane	ND		ug/kg	65	--	1
1,1,2-Trichloroethane	ND		ug/kg	97	--	1
Tetrachloroethene	ND		ug/kg	65	--	1
Chlorobenzene	ND		ug/kg	65	--	1
Trichlorofluoromethane	ND		ug/kg	320	--	1
1,2-Dichloroethane	ND		ug/kg	65	--	1
1,1,1-Trichloroethane	ND		ug/kg	65	--	1
Bromodichloromethane	ND		ug/kg	65	--	1
trans-1,3-Dichloropropene	ND		ug/kg	65	--	1
cis-1,3-Dichloropropene	ND		ug/kg	65	--	1
1,3-Dichloropropene, Total	ND		ug/kg	65	--	1
1,1-Dichloropropene	ND		ug/kg	320	--	1
Bromoform	ND		ug/kg	260	--	1
1,1,2,2-Tetrachloroethane	ND		ug/kg	65	--	1
Benzene	ND		ug/kg	65	--	1
Toluene	ND		ug/kg	97	--	1
Ethylbenzene	ND		ug/kg	65	--	1
Chloromethane	ND		ug/kg	320	--	1
Bromomethane	ND		ug/kg	130	--	1
Vinyl chloride	ND		ug/kg	130	--	1
Chloroethane	ND		ug/kg	130	--	1
1,1-Dichloroethene	ND		ug/kg	65	--	1
trans-1,2-Dichloroethene	ND		ug/kg	97	--	1
Trichloroethene	ND		ug/kg	65	--	1
1,2-Dichlorobenzene	ND		ug/kg	320	--	1

Project Name: EVERSOURCE NH SRP **Lab Number:** L1627010

Project Number: 1607530 **Report Date:** 09/15/16

SAMPLE RESULTS

Lab ID: L1627010-03 Date Collected: 08/26/16 10:45

Client ID: 1607530-B102(S1-S2) Date Received: 08/29/16

Sample Location: NEWINGTON, NH Field Prep: Not Specified

Parameter	Result	Qualifier	Units	RL	MDL	Dilution Factor
Volatile Organics by EPA 5035 High - Westborough Lab						
1,3-Dichlorobenzene	ND		ug/kg	320	--	1
1,4-Dichlorobenzene	ND		ug/kg	320	--	1
Methyl tert butyl ether	ND		ug/kg	130	--	1
p/m-Xylene	ND		ug/kg	130	--	1
o-Xylene	ND		ug/kg	130	--	1
Xylenes, Total	ND		ug/kg	130	--	1
cis-1,2-Dichloroethene	ND		ug/kg	65	--	1
1,2-Dichloroethene, Total	ND		ug/kg	65	--	1
Dibromomethane	ND		ug/kg	650	--	1
1,4-Dichlorobutane	ND		ug/kg	650	--	1
1,2,3-Trichloropropane	ND		ug/kg	650	--	1
Styrene	ND		ug/kg	130	--	1
Dichlorodifluoromethane	ND		ug/kg	650	--	1
Acetone	ND		ug/kg	2300	--	1
Carbon disulfide	ND		ug/kg	650	--	1
2-Butanone	ND		ug/kg	650	--	1
Vinyl acetate	ND		ug/kg	650	--	1
4-Methyl-2-pentanone	ND		ug/kg	650	--	1
2-Hexanone	ND		ug/kg	650	--	1
Ethyl methacrylate	ND		ug/kg	650	--	1
Acrylonitrile	ND		ug/kg	260	--	1
Bromochloromethane	ND		ug/kg	320	--	1
Tetrahydrofuran	ND		ug/kg	1300	--	1
2,2-Dichloropropane	ND		ug/kg	320	--	1
1,2-Dibromoethane	ND		ug/kg	260	--	1
1,3-Dichloropropane	ND		ug/kg	320	--	1
1,1,1,2-Tetrachloroethane	ND		ug/kg	65	--	1
Bromobenzene	ND		ug/kg	320	--	1
n-Butylbenzene	ND		ug/kg	65	--	1
sec-Butylbenzene	ND		ug/kg	65	--	1
tert-Butylbenzene	ND		ug/kg	320	--	1
o-Chlorotoluene	ND		ug/kg	320	--	1
p-Chlorotoluene	ND		ug/kg	320	--	1
1,2-Dibromo-3-chloropropane	ND		ug/kg	320	--	1
Hexachlorobutadiene	ND		ug/kg	320	--	1
Isopropylbenzene	ND		ug/kg	65	--	1
p-Isopropyltoluene	ND		ug/kg	65	--	1
Naphthalene	ND		ug/kg	320	--	1
n-Propylbenzene	ND		ug/kg	65	--	1

Project Name: EVERSOURCE NH SRP **Lab Number:** L1627010

Project Number: 1607530 **Report Date:** 09/15/16

SAMPLE RESULTS

Lab ID: L1627010-03 Date Collected: 08/26/16 10:45

Client ID: 1607530-B102(S1-S2) Date Received: 08/29/16

Sample Location: NEWINGTON, NH Field Prep: Not Specified

Parameter	Result	Qualifier	Units	RL	MDL	Dilution Factor
Volatile Organics by EPA 5035 High - Westborough Lab						
1,2,3-Trichlorobenzene	ND		ug/kg	320	--	1
1,2,4-Trichlorobenzene	ND		ug/kg	320	--	1
1,3,5-Trimethylbenzene	ND		ug/kg	320	--	1
1,2,4-Trimethylbenzene	ND		ug/kg	320	--	1
trans-1,4-Dichloro-2-butene	ND		ug/kg	320	--	1
Ethyl ether	ND		ug/kg	320	--	1

Surrogate	% Recovery	Qualifier	Acceptance Criteria
1,2-Dichloroethane-d4	96		70-130
Toluene-d8	101		70-130
4-Bromofluorobenzene	98		70-130
Dibromofluoromethane	94		70-130

Project Name: EVERSOURCE NH SRP **Lab Number:** L1627010

Project Number: 1607530 **Report Date:** 09/15/16

SAMPLE RESULTS

Lab ID:	L1627010-04	Date Collected:	08/26/16 11:00
Client ID:	1607530-B102(S3-S4)	Date Received:	08/29/16
Sample Location:	NEWINGTON, NH	Field Prep:	Not Specified
Matrix:	Soil		
Analytical Method:	1,8260C		
Analytical Date:	09/05/16 13:40		
Analyst:	BN		
Percent Solids:	79%		

Parameter	Result	Qualifier	Units	RL	MDL	Dilution Factor
Volatile Organics by EPA 5035 High - Westborough Lab						
Methylene chloride	ND		ug/kg	480	--	1
1,1-Dichloroethane	ND		ug/kg	73	--	1
Chloroform	ND		ug/kg	73	--	1
Carbon tetrachloride	ND		ug/kg	48	--	1
1,2-Dichloropropane	ND		ug/kg	170	--	1
Dibromochloromethane	ND		ug/kg	48	--	1
1,1,2-Trichloroethane	ND		ug/kg	73	--	1
Tetrachloroethene	ND		ug/kg	48	--	1
Chlorobenzene	ND		ug/kg	48	--	1
Trichlorofluoromethane	ND		ug/kg	240	--	1
1,2-Dichloroethane	ND		ug/kg	48	--	1
1,1,1-Trichloroethane	ND		ug/kg	48	--	1
Bromodichloromethane	ND		ug/kg	48	--	1
trans-1,3-Dichloropropene	ND		ug/kg	48	--	1
cis-1,3-Dichloropropene	ND		ug/kg	48	--	1
1,3-Dichloropropene, Total	ND		ug/kg	48	--	1
1,1-Dichloropropene	ND		ug/kg	240	--	1
Bromoform	ND		ug/kg	190	--	1
1,1,2,2-Tetrachloroethane	ND		ug/kg	48	--	1
Benzene	ND		ug/kg	48	--	1
Toluene	ND		ug/kg	73	--	1
Ethylbenzene	ND		ug/kg	48	--	1
Chloromethane	ND		ug/kg	240	--	1
Bromomethane	ND		ug/kg	97	--	1
Vinyl chloride	ND		ug/kg	97	--	1
Chloroethane	ND		ug/kg	97	--	1
1,1-Dichloroethene	ND		ug/kg	48	--	1
trans-1,2-Dichloroethene	ND		ug/kg	73	--	1
Trichloroethene	ND		ug/kg	48	--	1
1,2-Dichlorobenzene	ND		ug/kg	240	--	1

Project Name: EVERSOURCE NH SRP **Lab Number:** L1627010

Project Number: 1607530 **Report Date:** 09/15/16

SAMPLE RESULTS

Lab ID: L1627010-04 Date Collected: 08/26/16 11:00

Client ID: 1607530-B102(S3-S4) Date Received: 08/29/16

Sample Location: NEWINGTON, NH Field Prep: Not Specified

Parameter	Result	Qualifier	Units	RL	MDL	Dilution Factor
Volatile Organics by EPA 5035 High - Westborough Lab						
1,3-Dichlorobenzene	ND		ug/kg	240	--	1
1,4-Dichlorobenzene	ND		ug/kg	240	--	1
Methyl tert butyl ether	ND		ug/kg	97	--	1
p/m-Xylene	ND		ug/kg	97	--	1
o-Xylene	ND		ug/kg	97	--	1
Xylenes, Total	ND		ug/kg	97	--	1
cis-1,2-Dichloroethene	ND		ug/kg	48	--	1
1,2-Dichloroethene, Total	ND		ug/kg	48	--	1
Dibromomethane	ND		ug/kg	480	--	1
1,4-Dichlorobutane	ND		ug/kg	480	--	1
1,2,3-Trichloropropane	ND		ug/kg	480	--	1
Styrene	ND		ug/kg	97	--	1
Dichlorodifluoromethane	ND		ug/kg	480	--	1
Acetone	ND		ug/kg	1700	--	1
Carbon disulfide	ND		ug/kg	480	--	1
2-Butanone	ND		ug/kg	480	--	1
Vinyl acetate	ND		ug/kg	480	--	1
4-Methyl-2-pentanone	ND		ug/kg	480	--	1
2-Hexanone	ND		ug/kg	480	--	1
Ethyl methacrylate	ND		ug/kg	480	--	1
Acrylonitrile	ND		ug/kg	190	--	1
Bromochloromethane	ND		ug/kg	240	--	1
Tetrahydrofuran	ND		ug/kg	970	--	1
2,2-Dichloropropane	ND		ug/kg	240	--	1
1,2-Dibromoethane	ND		ug/kg	190	--	1
1,3-Dichloropropane	ND		ug/kg	240	--	1
1,1,1,2-Tetrachloroethane	ND		ug/kg	48	--	1
Bromobenzene	ND		ug/kg	240	--	1
n-Butylbenzene	ND		ug/kg	48	--	1
sec-Butylbenzene	ND		ug/kg	48	--	1
tert-Butylbenzene	ND		ug/kg	240	--	1
o-Chlorotoluene	ND		ug/kg	240	--	1
p-Chlorotoluene	ND		ug/kg	240	--	1
1,2-Dibromo-3-chloropropane	ND		ug/kg	240	--	1
Hexachlorobutadiene	ND		ug/kg	240	--	1
Isopropylbenzene	ND		ug/kg	48	--	1
p-Isopropyltoluene	ND		ug/kg	48	--	1
Naphthalene	ND		ug/kg	240	--	1
n-Propylbenzene	ND		ug/kg	48	--	1

Project Name: EVERSOURCE NH SRP **Lab Number:** L1627010

Project Number: 1607530 **Report Date:** 09/15/16

SAMPLE RESULTS

Lab ID: L1627010-04 Date Collected: 08/26/16 11:00

Client ID: 1607530-B102(S3-S4) Date Received: 08/29/16

Sample Location: NEWINGTON, NH Field Prep: Not Specified

Parameter	Result	Qualifier	Units	RL	MDL	Dilution Factor
Volatile Organics by EPA 5035 High - Westborough Lab						
1,2,3-Trichlorobenzene	ND		ug/kg	240	--	1
1,2,4-Trichlorobenzene	ND		ug/kg	240	--	1
1,3,5-Trimethylbenzene	ND		ug/kg	240	--	1
1,2,4-Trimethylbenzene	ND		ug/kg	240	--	1
trans-1,4-Dichloro-2-butene	ND		ug/kg	240	--	1
Ethyl ether	ND		ug/kg	240	--	1

Surrogate	% Recovery	Qualifier	Acceptance Criteria
1,2-Dichloroethane-d4	97		70-130
Toluene-d8	101		70-130
4-Bromofluorobenzene	98		70-130
Dibromofluoromethane	93		70-130

Project Name: EVERSOURCE NH SRP **Lab Number:** L1627010

Project Number: 1607530 **Report Date:** 09/15/16

SAMPLE RESULTS

Lab ID:	L1627010-05	Date Collected:	08/26/16 11:45
Client ID:	1607530-B101(S1-S2)	Date Received:	08/29/16
Sample Location:	NEWINGTON, NH	Field Prep:	Not Specified
Matrix:	Soil		
Analytical Method:	1,8260C		
Analytical Date:	09/05/16 14:06		
Analyst:	BN		
Percent Solids:	84%		

Parameter	Result	Qualifier	Units	RL	MDL	Dilution Factor
Volatile Organics by EPA 5035 High - Westborough Lab						
Methylene chloride	ND		ug/kg	650	--	1
1,1-Dichloroethane	ND		ug/kg	98	--	1
Chloroform	ND		ug/kg	98	--	1
Carbon tetrachloride	ND		ug/kg	65	--	1
1,2-Dichloropropane	ND		ug/kg	230	--	1
Dibromochloromethane	ND		ug/kg	65	--	1
1,1,2-Trichloroethane	ND		ug/kg	98	--	1
Tetrachloroethene	ND		ug/kg	65	--	1
Chlorobenzene	ND		ug/kg	65	--	1
Trichlorofluoromethane	ND		ug/kg	320	--	1
1,2-Dichloroethane	ND		ug/kg	65	--	1
1,1,1-Trichloroethane	ND		ug/kg	65	--	1
Bromodichloromethane	ND		ug/kg	65	--	1
trans-1,3-Dichloropropene	ND		ug/kg	65	--	1
cis-1,3-Dichloropropene	ND		ug/kg	65	--	1
1,3-Dichloropropene, Total	ND		ug/kg	65	--	1
1,1-Dichloropropene	ND		ug/kg	320	--	1
Bromoform	ND		ug/kg	260	--	1
1,1,2,2-Tetrachloroethane	ND		ug/kg	65	--	1
Benzene	ND		ug/kg	65	--	1
Toluene	ND		ug/kg	98	--	1
Ethylbenzene	ND		ug/kg	65	--	1
Chloromethane	ND		ug/kg	320	--	1
Bromomethane	ND		ug/kg	130	--	1
Vinyl chloride	ND		ug/kg	130	--	1
Chloroethane	ND		ug/kg	130	--	1
1,1-Dichloroethene	ND		ug/kg	65	--	1
trans-1,2-Dichloroethene	ND		ug/kg	98	--	1
Trichloroethene	ND		ug/kg	65	--	1
1,2-Dichlorobenzene	ND		ug/kg	320	--	1

Project Name: EVERSOURCE NH SRP **Lab Number:** L1627010

Project Number: 1607530 **Report Date:** 09/15/16

SAMPLE RESULTS

Lab ID: L1627010-05 Date Collected: 08/26/16 11:45

Client ID: 1607530-B101(S1-S2) Date Received: 08/29/16

Sample Location: NEWINGTON, NH Field Prep: Not Specified

Parameter	Result	Qualifier	Units	RL	MDL	Dilution Factor
Volatile Organics by EPA 5035 High - Westborough Lab						
1,3-Dichlorobenzene	ND		ug/kg	320	--	1
1,4-Dichlorobenzene	ND		ug/kg	320	--	1
Methyl tert butyl ether	ND		ug/kg	130	--	1
p/m-Xylene	ND		ug/kg	130	--	1
o-Xylene	ND		ug/kg	130	--	1
Xylenes, Total	ND		ug/kg	130	--	1
cis-1,2-Dichloroethene	ND		ug/kg	65	--	1
1,2-Dichloroethene, Total	ND		ug/kg	65	--	1
Dibromomethane	ND		ug/kg	650	--	1
1,4-Dichlorobutane	ND		ug/kg	650	--	1
1,2,3-Trichloropropane	ND		ug/kg	650	--	1
Styrene	ND		ug/kg	130	--	1
Dichlorodifluoromethane	ND		ug/kg	650	--	1
Acetone	ND		ug/kg	2300	--	1
Carbon disulfide	ND		ug/kg	650	--	1
2-Butanone	ND		ug/kg	650	--	1
Vinyl acetate	ND		ug/kg	650	--	1
4-Methyl-2-pentanone	ND		ug/kg	650	--	1
2-Hexanone	ND		ug/kg	650	--	1
Ethyl methacrylate	ND		ug/kg	650	--	1
Acrylonitrile	ND		ug/kg	260	--	1
Bromochloromethane	ND		ug/kg	320	--	1
Tetrahydrofuran	ND		ug/kg	1300	--	1
2,2-Dichloropropane	ND		ug/kg	320	--	1
1,2-Dibromoethane	ND		ug/kg	260	--	1
1,3-Dichloropropane	ND		ug/kg	320	--	1
1,1,1,2-Tetrachloroethane	ND		ug/kg	65	--	1
Bromobenzene	ND		ug/kg	320	--	1
n-Butylbenzene	ND		ug/kg	65	--	1
sec-Butylbenzene	ND		ug/kg	65	--	1
tert-Butylbenzene	ND		ug/kg	320	--	1
o-Chlorotoluene	ND		ug/kg	320	--	1
p-Chlorotoluene	ND		ug/kg	320	--	1
1,2-Dibromo-3-chloropropane	ND		ug/kg	320	--	1
Hexachlorobutadiene	ND		ug/kg	320	--	1
Isopropylbenzene	ND		ug/kg	65	--	1
p-Isopropyltoluene	ND		ug/kg	65	--	1
Naphthalene	ND		ug/kg	320	--	1
n-Propylbenzene	ND		ug/kg	65	--	1

Project Name: EVERSOURCE NH SRP **Lab Number:** L1627010

Project Number: 1607530 **Report Date:** 09/15/16

SAMPLE RESULTS

Lab ID: L1627010-05 Date Collected: 08/26/16 11:45

Client ID: 1607530-B101(S1-S2) Date Received: 08/29/16

Sample Location: NEWINGTON, NH Field Prep: Not Specified

Parameter	Result	Qualifier	Units	RL	MDL	Dilution Factor
Volatile Organics by EPA 5035 High - Westborough Lab						
1,2,3-Trichlorobenzene	ND		ug/kg	320	--	1
1,2,4-Trichlorobenzene	ND		ug/kg	320	--	1
1,3,5-Trimethylbenzene	ND		ug/kg	320	--	1
1,2,4-Trimethylbenzene	ND		ug/kg	320	--	1
trans-1,4-Dichloro-2-butene	ND		ug/kg	320	--	1
Ethyl ether	ND		ug/kg	320	--	1

Surrogate	% Recovery	Qualifier	Acceptance Criteria
1,2-Dichloroethane-d4	98		70-130
Toluene-d8	101		70-130
4-Bromofluorobenzene	97		70-130
Dibromofluoromethane	94		70-130

Project Name: EVERSOURCE NH SRP **Lab Number:** L1627010

Project Number: 1607530 **Report Date:** 09/15/16

SAMPLE RESULTS

Lab ID:	L1627010-06	Date Collected:	08/26/16 12:00
Client ID:	1607530-B101(S3-S4)	Date Received:	08/29/16
Sample Location:	NEWINGTON, NH	Field Prep:	Not Specified
Matrix:	Soil		
Analytical Method:	1,8260C		
Analytical Date:	09/05/16 14:33		
Analyst:	BN		
Percent Solids:	81%		

Parameter	Result	Qualifier	Units	RL	MDL	Dilution Factor
Volatile Organics by EPA 5035 High - Westborough Lab						
Methylene chloride	ND		ug/kg	480	--	1
1,1-Dichloroethane	ND		ug/kg	71	--	1
Chloroform	ND		ug/kg	71	--	1
Carbon tetrachloride	ND		ug/kg	48	--	1
1,2-Dichloropropane	ND		ug/kg	170	--	1
Dibromochloromethane	ND		ug/kg	48	--	1
1,1,2-Trichloroethane	ND		ug/kg	71	--	1
Tetrachloroethene	ND		ug/kg	48	--	1
Chlorobenzene	ND		ug/kg	48	--	1
Trichlorofluoromethane	ND		ug/kg	240	--	1
1,2-Dichloroethane	ND		ug/kg	48	--	1
1,1,1-Trichloroethane	ND		ug/kg	48	--	1
Bromodichloromethane	ND		ug/kg	48	--	1
trans-1,3-Dichloropropene	ND		ug/kg	48	--	1
cis-1,3-Dichloropropene	ND		ug/kg	48	--	1
1,3-Dichloropropene, Total	ND		ug/kg	48	--	1
1,1-Dichloropropene	ND		ug/kg	240	--	1
Bromoform	ND		ug/kg	190	--	1
1,1,2,2-Tetrachloroethane	ND		ug/kg	48	--	1
Benzene	ND		ug/kg	48	--	1
Toluene	ND		ug/kg	71	--	1
Ethylbenzene	ND		ug/kg	48	--	1
Chloromethane	ND		ug/kg	240	--	1
Bromomethane	ND		ug/kg	95	--	1
Vinyl chloride	ND		ug/kg	95	--	1
Chloroethane	ND		ug/kg	95	--	1
1,1-Dichloroethene	ND		ug/kg	48	--	1
trans-1,2-Dichloroethene	ND		ug/kg	71	--	1
Trichloroethene	ND		ug/kg	48	--	1
1,2-Dichlorobenzene	ND		ug/kg	240	--	1

Project Name: EVERSOURCE NH SRP **Lab Number:** L1627010

Project Number: 1607530 **Report Date:** 09/15/16

SAMPLE RESULTS

Lab ID: L1627010-06 Date Collected: 08/26/16 12:00

Client ID: 1607530-B101(S3-S4) Date Received: 08/29/16

Sample Location: NEWINGTON, NH Field Prep: Not Specified

Parameter	Result	Qualifier	Units	RL	MDL	Dilution Factor
Volatile Organics by EPA 5035 High - Westborough Lab						
1,3-Dichlorobenzene	ND		ug/kg	240	--	1
1,4-Dichlorobenzene	ND		ug/kg	240	--	1
Methyl tert butyl ether	ND		ug/kg	95	--	1
p/m-Xylene	ND		ug/kg	95	--	1
o-Xylene	ND		ug/kg	95	--	1
Xylenes, Total	ND		ug/kg	95	--	1
cis-1,2-Dichloroethene	ND		ug/kg	48	--	1
1,2-Dichloroethene, Total	ND		ug/kg	48	--	1
Dibromomethane	ND		ug/kg	480	--	1
1,4-Dichlorobutane	ND		ug/kg	480	--	1
1,2,3-Trichloropropane	ND		ug/kg	480	--	1
Styrene	ND		ug/kg	95	--	1
Dichlorodifluoromethane	ND		ug/kg	480	--	1
Acetone	ND		ug/kg	1700	--	1
Carbon disulfide	ND		ug/kg	480	--	1
2-Butanone	ND		ug/kg	480	--	1
Vinyl acetate	ND		ug/kg	480	--	1
4-Methyl-2-pentanone	ND		ug/kg	480	--	1
2-Hexanone	ND		ug/kg	480	--	1
Ethyl methacrylate	ND		ug/kg	480	--	1
Acrylonitrile	ND		ug/kg	190	--	1
Bromochloromethane	ND		ug/kg	240	--	1
Tetrahydrofuran	ND		ug/kg	950	--	1
2,2-Dichloropropane	ND		ug/kg	240	--	1
1,2-Dibromoethane	ND		ug/kg	190	--	1
1,3-Dichloropropane	ND		ug/kg	240	--	1
1,1,1,2-Tetrachloroethane	ND		ug/kg	48	--	1
Bromobenzene	ND		ug/kg	240	--	1
n-Butylbenzene	ND		ug/kg	48	--	1
sec-Butylbenzene	ND		ug/kg	48	--	1
tert-Butylbenzene	ND		ug/kg	240	--	1
o-Chlorotoluene	ND		ug/kg	240	--	1
p-Chlorotoluene	ND		ug/kg	240	--	1
1,2-Dibromo-3-chloropropane	ND		ug/kg	240	--	1
Hexachlorobutadiene	ND		ug/kg	240	--	1
Isopropylbenzene	ND		ug/kg	48	--	1
p-Isopropyltoluene	ND		ug/kg	48	--	1
Naphthalene	ND		ug/kg	240	--	1
n-Propylbenzene	ND		ug/kg	48	--	1

Project Name: EVERSOURCE NH SRP **Lab Number:** L1627010

Project Number: 1607530 **Report Date:** 09/15/16

SAMPLE RESULTS

Lab ID: L1627010-06 Date Collected: 08/26/16 12:00

Client ID: 1607530-B101(S3-S4) Date Received: 08/29/16

Sample Location: NEWINGTON, NH Field Prep: Not Specified

Parameter	Result	Qualifier	Units	RL	MDL	Dilution Factor
Volatile Organics by EPA 5035 High - Westborough Lab						
1,2,3-Trichlorobenzene	ND		ug/kg	240	--	1
1,2,4-Trichlorobenzene	ND		ug/kg	240	--	1
1,3,5-Trimethylbenzene	ND		ug/kg	240	--	1
1,2,4-Trimethylbenzene	ND		ug/kg	240	--	1
trans-1,4-Dichloro-2-butene	ND		ug/kg	240	--	1
Ethyl ether	ND		ug/kg	240	--	1

Surrogate	% Recovery	Qualifier	Acceptance Criteria
1,2-Dichloroethane-d4	97		70-130
Toluene-d8	101		70-130
4-Bromofluorobenzene	98		70-130
Dibromofluoromethane	93		70-130

Project Name: EVERSOURCE NH SRP **Lab Number:** L1627010

Project Number: 1607530 **Report Date:** 09/15/16

Method Blank Analysis
Batch Quality Control

Analytical Method: 1,8260C
Analytical Date: 09/05/16 08:21
Analyst: BN

Parameter	Result	Qualifier	Units	RL	MDL
Volatile Organics by EPA 5035 High - Westborough Lab for sample(s): 01-06 Batch: WG929175-5					
Methylene chloride	ND		ug/kg	500	--
1,1-Dichloroethane	ND		ug/kg	75	--
Chloroform	ND		ug/kg	75	--
Carbon tetrachloride	ND		ug/kg	50	--
1,2-Dichloropropane	ND		ug/kg	180	--
Dibromochloromethane	ND		ug/kg	50	--
1,1,2-Trichloroethane	ND		ug/kg	75	--
2-Chloroethylvinyl ether	ND		ug/kg	1000	--
Tetrachloroethene	ND		ug/kg	50	--
Chlorobenzene	ND		ug/kg	50	--
Trichlorofluoromethane	ND		ug/kg	250	--
1,2-Dichloroethane	ND		ug/kg	50	--
1,1,1-Trichloroethane	ND		ug/kg	50	--
Bromodichloromethane	ND		ug/kg	50	--
trans-1,3-Dichloropropene	ND		ug/kg	50	--
cis-1,3-Dichloropropene	ND		ug/kg	50	--
1,3-Dichloropropene, Total	ND		ug/kg	50	--
1,1-Dichloropropene	ND		ug/kg	250	--
Bromoform	ND		ug/kg	200	--
1,1,2,2-Tetrachloroethane	ND		ug/kg	50	--
Benzene	ND		ug/kg	50	--
Toluene	ND		ug/kg	75	--
Ethylbenzene	ND		ug/kg	50	--
Chloromethane	ND		ug/kg	250	--
Bromomethane	ND		ug/kg	100	--
Vinyl chloride	ND		ug/kg	100	--
Chloroethane	ND		ug/kg	100	--
1,1-Dichloroethene	ND		ug/kg	50	--
trans-1,2-Dichloroethene	ND		ug/kg	75	--

Project Name: EVERSOURCE NH SRP **Lab Number:** L1627010

Project Number: 1607530 **Report Date:** 09/15/16

Method Blank Analysis
Batch Quality Control

Analytical Method: 1,8260C
Analytical Date: 09/05/16 08:21
Analyst: BN

Parameter	Result	Qualifier	Units	RL	MDL
Volatile Organics by EPA 5035 High - Westborough Lab for sample(s): 01-06 Batch: WG929175-5					
Trichloroethene	ND		ug/kg	50	--
1,2-Dichlorobenzene	ND		ug/kg	250	--
1,3-Dichlorobenzene	ND		ug/kg	250	--
1,4-Dichlorobenzene	ND		ug/kg	250	--
Methyl tert butyl ether	ND		ug/kg	100	--
p/m-Xylene	ND		ug/kg	100	--
o-Xylene	ND		ug/kg	100	--
Xylenes, Total	ND		ug/kg	100	--
cis-1,2-Dichloroethene	ND		ug/kg	50	--
1,2-Dichloroethene, Total	ND		ug/kg	50	--
Dibromomethane	ND		ug/kg	500	--
1,4-Dichlorobutane	ND		ug/kg	500	--
1,2,3-Trichloropropane	ND		ug/kg	500	--
Styrene	ND		ug/kg	100	--
Dichlorodifluoromethane	ND		ug/kg	500	--
Acetone	ND		ug/kg	1800	--
Carbon disulfide	ND		ug/kg	500	--
2-Butanone	ND		ug/kg	500	--
Vinyl acetate	ND		ug/kg	500	--
4-Methyl-2-pentanone	ND		ug/kg	500	--
2-Hexanone	ND		ug/kg	500	--
Ethyl methacrylate	ND		ug/kg	500	--
Acrolein	ND		ug/kg	1200	--
Acrylonitrile	ND		ug/kg	200	--
Bromochloromethane	ND		ug/kg	250	--
Tetrahydrofuran	ND		ug/kg	1000	--
2,2-Dichloropropane	ND		ug/kg	250	--
1,2-Dibromoethane	ND		ug/kg	200	--
1,3-Dichloropropane	ND		ug/kg	250	--

Project Name: EVERSOURCE NH SRP **Lab Number:** L1627010

Project Number: 1607530 **Report Date:** 09/15/16

Method Blank Analysis
Batch Quality Control

Analytical Method: 1,8260C
Analytical Date: 09/05/16 08:21
Analyst: BN

Parameter	Result	Qualifier	Units	RL	MDL
Volatile Organics by EPA 5035 High - Westborough Lab for sample(s): 01-06 Batch: WG929175-5					
1,1,1,2-Tetrachloroethane	ND		ug/kg	50	--
Bromobenzene	ND		ug/kg	250	--
n-Butylbenzene	ND		ug/kg	50	--
sec-Butylbenzene	ND		ug/kg	50	--
tert-Butylbenzene	ND		ug/kg	250	--
1,3,5-Trichlorobenzene	ND		ug/kg	200	--
o-Chlorotoluene	ND		ug/kg	250	--
p-Chlorotoluene	ND		ug/kg	250	--
1,2-Dibromo-3-chloropropane	ND		ug/kg	250	--
Hexachlorobutadiene	ND		ug/kg	250	--
Isopropylbenzene	ND		ug/kg	50	--
p-Isopropyltoluene	ND		ug/kg	50	--
Naphthalene	ND		ug/kg	250	--
n-Propylbenzene	ND		ug/kg	50	--
1,2,3-Trichlorobenzene	ND		ug/kg	250	--
1,2,4-Trichlorobenzene	ND		ug/kg	250	--
1,3,5-Trimethylbenzene	ND		ug/kg	250	--
1,2,4-Trimethylbenzene	ND		ug/kg	250	--
trans-1,4-Dichloro-2-butene	ND		ug/kg	250	--
Halothane	ND		ug/kg	2000	--
Ethyl ether	ND		ug/kg	250	--
Methyl Acetate	ND		ug/kg	1000	--
Ethyl Acetate	ND		ug/kg	1000	--
Isopropyl Ether	ND		ug/kg	200	--
Cyclohexane	ND		ug/kg	1000	--
Tert-Butyl Alcohol	ND		ug/kg	5000	--
Ethyl-Tert-Butyl-Ether	ND		ug/kg	200	--
Tertiary-Amyl Methyl Ether	ND		ug/kg	200	--
1,4-Dioxane	ND		ug/kg	5000	--

Project Name: EVERSOURCE NH SRP **Lab Number:** L1627010

Project Number: 1607530 **Report Date:** 09/15/16

Method Blank Analysis
Batch Quality Control

Analytical Method: 1,8260C
Analytical Date: 09/05/16 08:21
Analyst: BN

Parameter	Result	Qualifier	Units	RL	MDL
Volatile Organics by EPA 5035 High - Westborough Lab for sample(s): 01-06 Batch: WG929175-5					
Methyl cyclohexane	ND		ug/kg	200	--
1,1,2-Trichloro-1,2,2-Trifluoroethane	ND		ug/kg	1000	--
p-Diethylbenzene	ND		ug/kg	200	--
4-Ethyltoluene	ND		ug/kg	200	--
1,2,4,5-Tetramethylbenzene	ND		ug/kg	200	--

Surrogate	%Recovery	Qualifier	Acceptance Criteria
1,2-Dichloroethane-d4	98		70-130
Toluene-d8	99		70-130
4-Bromofluorobenzene	98		70-130
Dibromofluoromethane	96		70-130

Lab Control Sample Analysis
Batch Quality Control

Project Name: EVERSOURCE NH SRP
Project Number: 1607530
Lab Number: L1627010
Report Date: 09/15/16

Parameter	LCS %Recovery	Qual	LCSD %Recovery	Qual	%Recovery Limits	RPD	Qual	RPD Limits
Volatile Organics by EPA 5035 High - Westborough Lab Associated sample(s): 01-06 Batch: WG929175-3 WG929175-4								
Methylene chloride	89		87		70-130	2		30
1,1-Dichloroethane	96		95		70-130	1		30
Chloroform	95		93		70-130	2		30
Carbon tetrachloride	93		91		70-130	2		30
1,2-Dichloropropane	94		92		70-130	2		30
Dibromochloromethane	92		92		70-130	0		30
1,1,2-Trichloroethane	94		93		70-130	1		30
2-Chloroethylvinyl ether	94		93		70-130	1		30
Tetrachloroethene	103		98		70-130	5		30
Chlorobenzene	96		94		70-130	2		30
Trichlorofluoromethane	112		107		70-139	5		30
1,2-Dichloroethane	93		92		70-130	1		30
1,1,1-Trichloroethane	95		93		70-130	2		30
Bromodichloromethane	92		89		70-130	3		30
trans-1,3-Dichloropropene	96		94		70-130	2		30
cis-1,3-Dichloropropene	95		95		70-130	0		30
1,1-Dichloropropene	107		104		70-130	3		30
Bromoform	83		83		70-130	0		30
1,1,2,2-Tetrachloroethane	94		93		70-130	1		30
Benzene	97		94		70-130	3		30
Toluene	97		94		70-130	3		30

Lab Control Sample Analysis
Batch Quality Control

Project Name: EVERSOURCE NH SRP
Project Number: 1607530
Lab Number: L1627010
Report Date: 09/15/16

Parameter	LCS %Recovery	Qual	LCSD %Recovery	Qual	%Recovery Limits	RPD	Qual	RPD Limits
Volatile Organics by EPA 5035 High - Westborough Lab Associated sample(s): 01-06 Batch: WG929175-3 WG929175-4								
Ethylbenzene	99		95		70-130	4		30
Chloromethane	115		111		52-130	4		30
Bromomethane	109		103		57-147	6		30
Vinyl chloride	104		99		67-130	5		30
Chloroethane	112		104		50-151	7		30
1,1-Dichloroethene	89		85		65-135	5		30
trans-1,2-Dichloroethene	99		95		70-130	4		30
Trichloroethene	98		94		70-130	4		30
1,2-Dichlorobenzene	99		98		70-130	1		30
1,3-Dichlorobenzene	100		98		70-130	2		30
1,4-Dichlorobenzene	99		97		70-130	2		30
Methyl tert butyl ether	92		91		66-130	1		30
p/m-Xylene	101		97		70-130	4		30
o-Xylene	101		98		70-130	3		30
cis-1,2-Dichloroethene	97		94		70-130	3		30
Dibromomethane	91		90		70-130	1		30
1,4-Dichlorobutane	94		92		70-130	2		30
1,2,3-Trichloropropane	94		94		68-130	0		30
Styrene	100		97		70-130	3		30
Dichlorodifluoromethane	118		112		30-146	5		30
Acetone	86		86		54-140	0		30

Lab Control Sample Analysis
Batch Quality Control

Project Name: EVERSOURCE NH SRP
Project Number: 1607530
Lab Number: L1627010
Report Date: 09/15/16

Parameter	LCS %Recovery	Qual	LCSD %Recovery	Qual	%Recovery Limits	RPD	Qual	RPD Limits
Volatile Organics by EPA 5035 High - Westborough Lab Associated sample(s): 01-06 Batch: WG929175-3 WG929175-4								
Carbon disulfide	73		72		59-130	1		30
2-Butanone	77		78		70-130	1		30
Vinyl acetate	95		96		70-130	1		30
4-Methyl-2-pentanone	89		88		70-130	1		30
2-Hexanone	86		86		70-130	0		30
Ethyl methacrylate	84		83		70-130	1		30
Acrolein	**44**	Q	**47**	Q	70-130	7		30
Acrylonitrile	84		83		70-130	1		30
Bromochloromethane	97		95		70-130	2		30
Tetrahydrofuran	84		85		66-130	1		30
2,2-Dichloropropane	97		94		70-130	3		30
1,2-Dibromoethane	94		92		70-130	2		30
1,3-Dichloropropane	96		94		69-130	2		30
1,1,1,2-Tetrachloroethane	95		93		70-130	2		30
Bromobenzene	100		97		70-130	3		30
n-Butylbenzene	109		106		70-130	3		30
sec-Butylbenzene	104		101		70-130	3		30
tert-Butylbenzene	103		100		70-130	3		30
1,3,5-Trichlorobenzene	104		102		70-139	2		30
o-Chlorotoluene	98		95		70-130	3		30
p-Chlorotoluene	98		97		70-130	1		30

Lab Control Sample Analysis
Batch Quality Control

Project Name: EVERSOURCE NH SRP
Project Number: 1607530
Lab Number: L1627010
Report Date: 09/15/16

Parameter	LCS %Recovery	Qual	LCSD %Recovery	Qual	%Recovery Limits	RPD	Qual	RPD Limits
Volatile Organics by EPA 5035 High - Westborough Lab Associated sample(s): 01-06 Batch: WG929175-3 WG929175-4								
1,2-Dibromo-3-chloropropane	84		87		68-130	4		30
Hexachlorobutadiene	107		104		67-130	3		30
Isopropylbenzene	102		98		70-130	4		30
p-Isopropyltoluene	106		103		70-130	3		30
Naphthalene	96		95		70-130	1		30
n-Propylbenzene	104		101		70-130	3		30
1,2,3-Trichlorobenzene	101		100		70-130	1		30
1,2,4-Trichlorobenzene	103		102		70-130	1		30
1,3,5-Trimethylbenzene	102		98		70-130	4		30
1,2,4-Trimethylbenzene	103		101		70-130	2		30
trans-1,4-Dichloro-2-butene	90		90		70-130	0		30
Halothane	107		105		70-130	2		20
Ethyl ether	105		102		67-130	3		30
Methyl Acetate	101		100		65-130	1		30
Ethyl Acetate	92		94		70-130	2		30
Isopropyl Ether	93		92		66-130	1		30
Cyclohexane	108		105		70-130	3		30
Tert-Butyl Alcohol	76		76		70-130	0		30
Ethyl-Tert-Butyl-Ether	94		93		70-130	1		30
Tertiary-Amyl Methyl Ether	91		90		70-130	1		30
1,4-Dioxane	78		75		65-136	4		30

Lab Control Sample Analysis
Batch Quality Control

Project Name: EVERSOURCE NH SRP
Project Number: 1607530
Lab Number: L1627010
Report Date: 09/15/16

Parameter	LCS %Recovery	Qual	LCSD %Recovery	Qual	%Recovery Limits	RPD	Qual	RPD Limits
Volatile Organics by EPA 5035 High - Westborough Lab Associated sample(s): 01-06 Batch: WG929175-3 WG929175-4								
Methyl cyclohexane	114		109		70-130	4		30
1,1,2-Trichloro-1,2,2-Trifluoroethane	101		96		70-130	5		30
p-Diethylbenzene	107		104		70-130	3		30
4-Ethyltoluene	109		105		70-130	4		30
1,2,4,5-Tetramethylbenzene	105		103		70-130	2		30

Surrogate	LCS %Recovery	Qual	LCSD %Recovery	Qual	Acceptance Criteria
1,2-Dichloroethane-d4	95		97		70-130
Toluene-d8	101		100		70-130
4-Bromofluorobenzene	101		100		70-130
Dibromofluoromethane	100		100		70-130

SEMIVOLATILES

Project Name: EVERSOURCE NH SRP **Lab Number:** L1627010

Project Number: 1607530 **Report Date:** 09/15/16

SAMPLE RESULTS

Lab ID:	L1627010-01	Date Collected:	08/26/16 09:25
Client ID:	1607530-B103(S1-S2)	Date Received:	08/29/16
Sample Location:	NEWINGTON, NH	Field Prep:	Not Specified
Matrix:	Soil	Extraction Method:	EPA 3546
Analytical Method:	1,8270D	Extraction Date:	08/31/16 00:26
Analytical Date:	09/02/16 04:52		
Analyst:	KV		
Percent Solids:	93%		

Parameter	Result	Qualifier	Units	RL	MDL	Dilution Factor
Semivolatile Organics by GC/MS - Westborough Lab						
Acenaphthene	ND		ug/kg	140	--	1
Benzidine	ND		ug/kg	580	--	1
1,2,4-Trichlorobenzene	ND		ug/kg	180	--	1
Hexachlorobenzene	ND		ug/kg	110	--	1
Bis(2-chloroethyl)ether	ND		ug/kg	160	--	1
2-Chloronaphthalene	ND		ug/kg	180	--	1
1,2-Dichlorobenzene	ND		ug/kg	180	--	1
1,3-Dichlorobenzene	ND		ug/kg	180	--	1
1,4-Dichlorobenzene	ND		ug/kg	180	--	1
3,3'-Dichlorobenzidine	ND		ug/kg	180	--	1
2,4-Dinitrotoluene	ND		ug/kg	180	--	1
2,6-Dinitrotoluene	ND		ug/kg	180	--	1
Azobenzene	ND		ug/kg	180	--	1
Fluoranthene	ND		ug/kg	110	--	1
4-Chlorophenyl phenyl ether	ND		ug/kg	180	--	1
4-Bromophenyl phenyl ether	ND		ug/kg	180	--	1
Bis(2-chloroisopropyl)ether	ND		ug/kg	210	--	1
Bis(2-chloroethoxy)methane	ND		ug/kg	190	--	1
Hexachlorobutadiene	ND		ug/kg	180	--	1
Hexachlorocyclopentadiene	ND		ug/kg	500	--	1
Hexachloroethane	ND		ug/kg	140	--	1
Isophorone	ND		ug/kg	160	--	1
Naphthalene	ND		ug/kg	180	--	1
Nitrobenzene	ND		ug/kg	160	--	1
NDPA/DPA	ND		ug/kg	140	--	1
n-Nitrosodi-n-propylamine	ND		ug/kg	180	--	1
Bis(2-ethylhexyl)phthalate	ND		ug/kg	180	--	1
Butyl benzyl phthalate	ND		ug/kg	180	--	1
Di-n-butylphthalate	ND		ug/kg	180	--	1
Di-n-octylphthalate	ND		ug/kg	180	--	1

Project Name: EVERSOURCE NH SRP **Lab Number:** L1627010

Project Number: 1607530 **Report Date:** 09/15/16

SAMPLE RESULTS

Lab ID: L1627010-01 Date Collected: 08/26/16 09:25

Client ID: 1607530-B103(S1-S2) Date Received: 08/29/16

Sample Location: NEWINGTON, NH Field Prep: Not Specified

Parameter	Result	Qualifier	Units	RL	MDL	Dilution Factor
Semivolatile Organics by GC/MS - Westborough Lab						
Diethyl phthalate	ND		ug/kg	180	--	1
Dimethyl phthalate	ND		ug/kg	180	--	1
Benzo(a)anthracene	ND		ug/kg	110	--	1
Benzo(a)pyrene	ND		ug/kg	140	--	1
Benzo(b)fluoranthene	ND		ug/kg	110	--	1
Benzo(k)fluoranthene	ND		ug/kg	110	--	1
Chrysene	ND		ug/kg	110	--	1
Acenaphthylene	ND		ug/kg	140	--	1
Anthracene	ND		ug/kg	110	--	1
Benzo(ghi)perylene	ND		ug/kg	140	--	1
Fluorene	ND		ug/kg	180	--	1
Phenanthrene	ND		ug/kg	110	--	1
Dibenzo(a,h)anthracene	ND		ug/kg	110	--	1
Indeno(1,2,3-cd)pyrene	ND		ug/kg	140	--	1
Pyrene	ND		ug/kg	110	--	1
Biphenyl	ND		ug/kg	400	--	1
Aniline	ND		ug/kg	210	--	1
4-Chloroaniline	ND		ug/kg	180	--	1
1-Methylnaphthalene	ND		ug/kg	180	--	1
2-Nitroaniline	ND		ug/kg	180	--	1
3-Nitroaniline	ND		ug/kg	180	--	1
4-Nitroaniline	ND		ug/kg	180	--	1
Dibenzofuran	ND		ug/kg	180	--	1
2-Methylnaphthalene	ND		ug/kg	210	--	1
n-Nitrosodimethylamine	ND		ug/kg	350	--	1
2,4,6-Trichlorophenol	ND		ug/kg	110	--	1
p-Chloro-m-cresol	ND		ug/kg	180	--	1
2-Chlorophenol	ND		ug/kg	180	--	1
2,4-Dichlorophenol	ND		ug/kg	160	--	1
2,4-Dimethylphenol	ND		ug/kg	180	--	1
2-Nitrophenol	ND		ug/kg	380	--	1
4-Nitrophenol	ND		ug/kg	250	--	1
2,4-Dinitrophenol	ND		ug/kg	850	--	1
4,6-Dinitro-o-cresol	ND		ug/kg	460	--	1
Pentachlorophenol	ND		ug/kg	140	--	1
Phenol	ND		ug/kg	180	--	1
2-Methylphenol	ND		ug/kg	180	--	1
3-Methylphenol/4-Methylphenol	ND		ug/kg	250	--	1
2,4,5-Trichlorophenol	ND		ug/kg	180	--	1

Project Name: EVERSOURCE NH SRP **Lab Number:** L1627010

Project Number: 1607530 **Report Date:** 09/15/16

SAMPLE RESULTS

Lab ID: L1627010-01 Date Collected: 08/26/16 09:25

Client ID: 1607530-B103(S1-S2) Date Received: 08/29/16

Sample Location: NEWINGTON, NH Field Prep: Not Specified

Parameter	Result	Qualifier	Units	RL	MDL	Dilution Factor
Semivolatile Organics by GC/MS - Westborough Lab						
Benzoic Acid	ND		ug/kg	570	--	1
Benzyl Alcohol	ND		ug/kg	180	--	1
Carbazole	ND		ug/kg	180	--	1
Pyridine	ND		ug/kg	710	--	1

Surrogate	% Recovery	Qualifier	Acceptance Criteria
2-Fluorophenol	98		25-120
Phenol-d6	101		10-120
Nitrobenzene-d5	103		23-120
2-Fluorobiphenyl	83		30-120
2,4,6-Tribromophenol	89		10-136
4-Terphenyl-d14	84		18-120

Project Name: EVERSOURCE NH SRP **Lab Number:** L1627010

Project Number: 1607530 **Report Date:** 09/15/16

SAMPLE RESULTS

Lab ID:	L1627010-02	Date Collected:	08/26/16 09:55
Client ID:	1607530-B103(S3-S4)	Date Received:	08/29/16
Sample Location:	NEWINGTON, NH	Field Prep:	Not Specified
Matrix:	Soil	Extraction Method:	EPA 3546
Analytical Method:	1,8270D	Extraction Date:	08/31/16 00:26
Analytical Date:	09/02/16 05:18		
Analyst:	KV		
Percent Solids:	92%		

Parameter	Result	Qualifier	Units	RL	MDL	Dilution Factor
Semivolatile Organics by GC/MS - Westborough Lab						
Acenaphthene	ND		ug/kg	140	--	1
Benzidine	ND		ug/kg	580	--	1
1,2,4-Trichlorobenzene	ND		ug/kg	180	--	1
Hexachlorobenzene	ND		ug/kg	100	--	1
Bis(2-chloroethyl)ether	ND		ug/kg	160	--	1
2-Chloronaphthalene	ND		ug/kg	180	--	1
1,2-Dichlorobenzene	ND		ug/kg	180	--	1
1,3-Dichlorobenzene	ND		ug/kg	180	--	1
1,4-Dichlorobenzene	ND		ug/kg	180	--	1
3,3'-Dichlorobenzidine	ND		ug/kg	180	--	1
2,4-Dinitrotoluene	ND		ug/kg	180	--	1
2,6-Dinitrotoluene	ND		ug/kg	180	--	1
Azobenzene	ND		ug/kg	180	--	1
Fluoranthene	ND		ug/kg	100	--	1
4-Chlorophenyl phenyl ether	ND		ug/kg	180	--	1
4-Bromophenyl phenyl ether	ND		ug/kg	180	--	1
Bis(2-chloroisopropyl)ether	ND		ug/kg	210	--	1
Bis(2-chloroethoxy)methane	ND		ug/kg	190	--	1
Hexachlorobutadiene	ND		ug/kg	180	--	1
Hexachlorocyclopentadiene	ND		ug/kg	500	--	1
Hexachloroethane	ND		ug/kg	140	--	1
Isophorone	ND		ug/kg	160	--	1
Naphthalene	ND		ug/kg	180	--	1
Nitrobenzene	ND		ug/kg	160	--	1
NDPA/DPA	ND		ug/kg	140	--	1
n-Nitrosodi-n-propylamine	ND		ug/kg	180	--	1
Bis(2-ethylhexyl)phthalate	ND		ug/kg	180	--	1
Butyl benzyl phthalate	ND		ug/kg	180	--	1
Di-n-butylphthalate	ND		ug/kg	180	--	1
Di-n-octylphthalate	ND		ug/kg	180	--	1

Project Name: EVERSOURCE NH SRP **Lab Number:** L1627010

Project Number: 1607530 **Report Date:** 09/15/16

SAMPLE RESULTS

Lab ID: L1627010-02 Date Collected: 08/26/16 09:55

Client ID: 1607530-B103(S3-S4) Date Received: 08/29/16

Sample Location: NEWINGTON, NH Field Prep: Not Specified

Parameter	Result	Qualifier	Units	RL	MDL	Dilution Factor
Semivolatile Organics by GC/MS - Westborough Lab						
Diethyl phthalate	ND		ug/kg	180	--	1
Dimethyl phthalate	ND		ug/kg	180	--	1
Benzo(a)anthracene	ND		ug/kg	100	--	1
Benzo(a)pyrene	ND		ug/kg	140	--	1
Benzo(b)fluoranthene	ND		ug/kg	100	--	1
Benzo(k)fluoranthene	ND		ug/kg	100	--	1
Chrysene	ND		ug/kg	100	--	1
Acenaphthylene	ND		ug/kg	140	--	1
Anthracene	ND		ug/kg	100	--	1
Benzo(ghi)perylene	ND		ug/kg	140	--	1
Fluorene	ND		ug/kg	180	--	1
Phenanthrene	ND		ug/kg	100	--	1
Dibenzo(a,h)anthracene	ND		ug/kg	100	--	1
Indeno(1,2,3-cd)pyrene	ND		ug/kg	140	--	1
Pyrene	ND		ug/kg	100	--	1
Biphenyl	ND		ug/kg	400	--	1
Aniline	ND		ug/kg	210	--	1
4-Chloroaniline	ND		ug/kg	180	--	1
1-Methylnaphthalene	ND		ug/kg	180	--	1
2-Nitroaniline	ND		ug/kg	180	--	1
3-Nitroaniline	ND		ug/kg	180	--	1
4-Nitroaniline	ND		ug/kg	180	--	1
Dibenzofuran	ND		ug/kg	180	--	1
2-Methylnaphthalene	ND		ug/kg	210	--	1
n-Nitrosodimethylamine	ND		ug/kg	350	--	1
2,4,6-Trichlorophenol	ND		ug/kg	100	--	1
p-Chloro-m-cresol	ND		ug/kg	180	--	1
2-Chlorophenol	ND		ug/kg	180	--	1
2,4-Dichlorophenol	ND		ug/kg	160	--	1
2,4-Dimethylphenol	ND		ug/kg	180	--	1
2-Nitrophenol	ND		ug/kg	380	--	1
4-Nitrophenol	ND		ug/kg	250	--	1
2,4-Dinitrophenol	ND		ug/kg	840	--	1
4,6-Dinitro-o-cresol	ND		ug/kg	460	--	1
Pentachlorophenol	ND		ug/kg	140	--	1
Phenol	ND		ug/kg	180	--	1
2-Methylphenol	ND		ug/kg	180	--	1
3-Methylphenol/4-Methylphenol	ND		ug/kg	250	--	1
2,4,5-Trichlorophenol	ND		ug/kg	180	--	1

Project Name: EVERSOURCE NH SRP **Lab Number:** L1627010

Project Number: 1607530 **Report Date:** 09/15/16

SAMPLE RESULTS

Lab ID: L1627010-02 Date Collected: 08/26/16 09:55

Client ID: 1607530-B103(S3-S4) Date Received: 08/29/16

Sample Location: NEWINGTON, NH Field Prep: Not Specified

Parameter	Result	Qualifier	Units	RL	MDL	Dilution Factor
Semivolatile Organics by GC/MS - Westborough Lab						
Benzoic Acid	ND		ug/kg	570	--	1
Benzyl Alcohol	ND		ug/kg	180	--	1
Carbazole	ND		ug/kg	180	--	1
Pyridine	ND		ug/kg	700	--	1

Surrogate	% Recovery	Qualifier	Acceptance Criteria
2-Fluorophenol	93		25-120
Phenol-d6	98		10-120
Nitrobenzene-d5	98		23-120
2-Fluorobiphenyl	85		30-120
2,4,6-Tribromophenol	92		10-136
4-Terphenyl-d14	93		18-120

Project Name: EVERSOURCE NH SRP **Lab Number:** L1627010

Project Number: 1607530 **Report Date:** 09/15/16

SAMPLE RESULTS

Lab ID:	L1627010-03	Date Collected:	08/26/16 10:45
Client ID:	1607530-B102(S1-S2)	Date Received:	08/29/16
Sample Location:	NEWINGTON, NH	Field Prep:	Not Specified
Matrix:	Soil	Extraction Method:	EPA 3546
Analytical Method:	1,8270D	Extraction Date:	08/31/16 00:26
Analytical Date:	09/02/16 05:43		
Analyst:	KV		
Percent Solids:	84%		

Parameter	Result	Qualifier	Units	RL	MDL	Dilution Factor
Semivolatile Organics by GC/MS - Westborough Lab						
Acenaphthene	ND		ug/kg	150	--	1
Benzidine	ND		ug/kg	640	--	1
1,2,4-Trichlorobenzene	ND		ug/kg	190	--	1
Hexachlorobenzene	ND		ug/kg	120	--	1
Bis(2-chloroethyl)ether	ND		ug/kg	170	--	1
2-Chloronaphthalene	ND		ug/kg	190	--	1
1,2-Dichlorobenzene	ND		ug/kg	190	--	1
1,3-Dichlorobenzene	ND		ug/kg	190	--	1
1,4-Dichlorobenzene	ND		ug/kg	190	--	1
3,3'-Dichlorobenzidine	ND		ug/kg	190	--	1
2,4-Dinitrotoluene	ND		ug/kg	190	--	1
2,6-Dinitrotoluene	ND		ug/kg	190	--	1
Azobenzene	ND		ug/kg	190	--	1
Fluoranthene	ND		ug/kg	120	--	1
4-Chlorophenyl phenyl ether	ND		ug/kg	190	--	1
4-Bromophenyl phenyl ether	ND		ug/kg	190	--	1
Bis(2-chloroisopropyl)ether	ND		ug/kg	230	--	1
Bis(2-chloroethoxy)methane	ND		ug/kg	210	--	1
Hexachlorobutadiene	ND		ug/kg	190	--	1
Hexachlorocyclopentadiene	ND		ug/kg	550	--	1
Hexachloroethane	ND		ug/kg	150	--	1
Isophorone	ND		ug/kg	170	--	1
Naphthalene	ND		ug/kg	190	--	1
Nitrobenzene	ND		ug/kg	170	--	1
NDPA/DPA	ND		ug/kg	150	--	1
n-Nitrosodi-n-propylamine	ND		ug/kg	190	--	1
Bis(2-ethylhexyl)phthalate	ND		ug/kg	190	--	1
Butyl benzyl phthalate	ND		ug/kg	190	--	1
Di-n-butylphthalate	ND		ug/kg	190	--	1
Di-n-octylphthalate	ND		ug/kg	190	--	1

Project Name: EVERSOURCE NH SRP **Lab Number:** L1627010

Project Number: 1607530 **Report Date:** 09/15/16

SAMPLE RESULTS

Lab ID: L1627010-03 Date Collected: 08/26/16 10:45

Client ID: 1607530-B102(S1-S2) Date Received: 08/29/16

Sample Location: NEWINGTON, NH Field Prep: Not Specified

Parameter	Result	Qualifier	Units	RL	MDL	Dilution Factor
Semivolatile Organics by GC/MS - Westborough Lab						
Diethyl phthalate	ND		ug/kg	190	--	1
Dimethyl phthalate	ND		ug/kg	190	--	1
Benzo(a)anthracene	ND		ug/kg	120	--	1
Benzo(a)pyrene	ND		ug/kg	150	--	1
Benzo(b)fluoranthene	ND		ug/kg	120	--	1
Benzo(k)fluoranthene	ND		ug/kg	120	--	1
Chrysene	ND		ug/kg	120	--	1
Acenaphthylene	ND		ug/kg	150	--	1
Anthracene	ND		ug/kg	120	--	1
Benzo(ghi)perylene	ND		ug/kg	150	--	1
Fluorene	ND		ug/kg	190	--	1
Phenanthrene	ND		ug/kg	120	--	1
Dibenzo(a,h)anthracene	ND		ug/kg	120	--	1
Indeno(1,2,3-cd)pyrene	ND		ug/kg	150	--	1
Pyrene	ND		ug/kg	120	--	1
Biphenyl	ND		ug/kg	440	--	1
Aniline	ND		ug/kg	230	--	1
4-Chloroaniline	ND		ug/kg	190	--	1
1-Methylnaphthalene	ND		ug/kg	190	--	1
2-Nitroaniline	ND		ug/kg	190	--	1
3-Nitroaniline	ND		ug/kg	190	--	1
4-Nitroaniline	ND		ug/kg	190	--	1
Dibenzofuran	ND		ug/kg	190	--	1
2-Methylnaphthalene	ND		ug/kg	230	--	1
n-Nitrosodimethylamine	ND		ug/kg	390	--	1
2,4,6-Trichlorophenol	ND		ug/kg	120	--	1
p-Chloro-m-cresol	ND		ug/kg	190	--	1
2-Chlorophenol	ND		ug/kg	190	--	1
2,4-Dichlorophenol	ND		ug/kg	170	--	1
2,4-Dimethylphenol	ND		ug/kg	190	--	1
2-Nitrophenol	ND		ug/kg	420	--	1
4-Nitrophenol	ND		ug/kg	270	--	1
2,4-Dinitrophenol	ND		ug/kg	930	--	1
4,6-Dinitro-o-cresol	ND		ug/kg	500	--	1
Pentachlorophenol	ND		ug/kg	150	--	1
Phenol	ND		ug/kg	190	--	1
2-Methylphenol	ND		ug/kg	190	--	1
3-Methylphenol/4-Methylphenol	ND		ug/kg	280	--	1
2,4,5-Trichlorophenol	ND		ug/kg	190	--	1

Project Name: EVERSOURCE NH SRP **Lab Number:** L1627010

Project Number: 1607530 **Report Date:** 09/15/16

SAMPLE RESULTS

Lab ID: L1627010-03 Date Collected: 08/26/16 10:45

Client ID: 1607530-B102(S1-S2) Date Received: 08/29/16

Sample Location: NEWINGTON, NH Field Prep: Not Specified

Parameter	Result	Qualifier	Units	RL	MDL	Dilution Factor
Semivolatile Organics by GC/MS - Westborough Lab						
Benzoic Acid	ND		ug/kg	630	--	1
Benzyl Alcohol	ND		ug/kg	190	--	1
Carbazole	ND		ug/kg	190	--	1
Pyridine	ND		ug/kg	770	--	1

Surrogate	% Recovery	Qualifier	Acceptance Criteria
2-Fluorophenol	89		25-120
Phenol-d6	93		10-120
Nitrobenzene-d5	96		23-120
2-Fluorobiphenyl	82		30-120
2,4,6-Tribromophenol	90		10-136
4-Terphenyl-d14	86		18-120

Project Name: EVERSOURCE NH SRP
Project Number: 1607530
Lab Number: L1627010
Report Date: 09/15/16

SAMPLE RESULTS

Lab ID:	L1627010-04	Date Collected:	08/26/16 11:00
Client ID:	1607530-B102(S3-S4)	Date Received:	08/29/16
Sample Location:	NEWINGTON, NH	Field Prep:	Not Specified
Matrix:	Soil	Extraction Method:	EPA 3546
Analytical Method:	1,8270D	Extraction Date:	08/31/16 00:26
Analytical Date:	09/02/16 06:08		
Analyst:	KV		
Percent Solids:	79%		

Parameter	Result	Qualifier	Units	RL	MDL	Dilution Factor
Semivolatile Organics by GC/MS - Westborough Lab						
Acenaphthene	ND		ug/kg	170	--	1
Benzidine	ND		ug/kg	690	--	1
1,2,4-Trichlorobenzene	ND		ug/kg	210	--	1
Hexachlorobenzene	ND		ug/kg	120	--	1
Bis(2-chloroethyl)ether	ND		ug/kg	190	--	1
2-Chloronaphthalene	ND		ug/kg	210	--	1
1,2-Dichlorobenzene	ND		ug/kg	210	--	1
1,3-Dichlorobenzene	ND		ug/kg	210	--	1
1,4-Dichlorobenzene	ND		ug/kg	210	--	1
3,3'-Dichlorobenzidine	ND		ug/kg	210	--	1
2,4-Dinitrotoluene	ND		ug/kg	210	--	1
2,6-Dinitrotoluene	ND		ug/kg	210	--	1
Azobenzene	ND		ug/kg	210	--	1
Fluoranthene	ND		ug/kg	120	--	1
4-Chlorophenyl phenyl ether	ND		ug/kg	210	--	1
4-Bromophenyl phenyl ether	ND		ug/kg	210	--	1
Bis(2-chloroisopropyl)ether	ND		ug/kg	250	--	1
Bis(2-chloroethoxy)methane	ND		ug/kg	220	--	1
Hexachlorobutadiene	ND		ug/kg	210	--	1
Hexachlorocyclopentadiene	ND		ug/kg	600	--	1
Hexachloroethane	ND		ug/kg	170	--	1
Isophorone	ND		ug/kg	190	--	1
Naphthalene	ND		ug/kg	210	--	1
Nitrobenzene	ND		ug/kg	190	--	1
NDPA/DPA	ND		ug/kg	170	--	1
n-Nitrosodi-n-propylamine	ND		ug/kg	210	--	1
Bis(2-ethylhexyl)phthalate	ND		ug/kg	210	--	1
Butyl benzyl phthalate	ND		ug/kg	210	--	1
Di-n-butylphthalate	ND		ug/kg	210	--	1
Di-n-octylphthalate	ND		ug/kg	210	--	1

Project Name: EVERSOURCE NH SRP **Lab Number:** L1627010

Project Number: 1607530 **Report Date:** 09/15/16

SAMPLE RESULTS

Lab ID: L1627010-04 Date Collected: 08/26/16 11:00

Client ID: 1607530-B102(S3-S4) Date Received: 08/29/16

Sample Location: NEWINGTON, NH Field Prep: Not Specified

Parameter	Result	Qualifier	Units	RL	MDL	Dilution Factor
Semivolatile Organics by GC/MS - Westborough Lab						
Diethyl phthalate	ND		ug/kg	210	--	1
Dimethyl phthalate	ND		ug/kg	210	--	1
Benzo(a)anthracene	ND		ug/kg	120	--	1
Benzo(a)pyrene	ND		ug/kg	170	--	1
Benzo(b)fluoranthene	ND		ug/kg	120	--	1
Benzo(k)fluoranthene	ND		ug/kg	120	--	1
Chrysene	ND		ug/kg	120	--	1
Acenaphthylene	ND		ug/kg	170	--	1
Anthracene	ND		ug/kg	120	--	1
Benzo(ghi)perylene	ND		ug/kg	170	--	1
Fluorene	ND		ug/kg	210	--	1
Phenanthrene	ND		ug/kg	120	--	1
Dibenzo(a,h)anthracene	ND		ug/kg	120	--	1
Indeno(1,2,3-cd)pyrene	ND		ug/kg	170	--	1
Pyrene	ND		ug/kg	120	--	1
Biphenyl	ND		ug/kg	480	--	1
Aniline	ND		ug/kg	250	--	1
4-Chloroaniline	ND		ug/kg	210	--	1
1-Methylnaphthalene	ND		ug/kg	210	--	1
2-Nitroaniline	ND		ug/kg	210	--	1
3-Nitroaniline	ND		ug/kg	210	--	1
4-Nitroaniline	ND		ug/kg	210	--	1
Dibenzofuran	ND		ug/kg	210	--	1
2-Methylnaphthalene	ND		ug/kg	250	--	1
n-Nitrosodimethylamine	ND		ug/kg	420	--	1
2,4,6-Trichlorophenol	ND		ug/kg	120	--	1
p-Chloro-m-cresol	ND		ug/kg	210	--	1
2-Chlorophenol	ND		ug/kg	210	--	1
2,4-Dichlorophenol	ND		ug/kg	190	--	1
2,4-Dimethylphenol	ND		ug/kg	210	--	1
2-Nitrophenol	ND		ug/kg	450	--	1
4-Nitrophenol	ND		ug/kg	290	--	1
2,4-Dinitrophenol	ND		ug/kg	1000	--	1
4,6-Dinitro-o-cresol	ND		ug/kg	540	--	1
Pentachlorophenol	ND		ug/kg	170	--	1
Phenol	ND		ug/kg	210	--	1
2-Methylphenol	ND		ug/kg	210	--	1
3-Methylphenol/4-Methylphenol	ND		ug/kg	300	--	1
2,4,5-Trichlorophenol	ND		ug/kg	210	--	1

Project Name: EVERSOURCE NH SRP **Lab Number:** L1627010

Project Number: 1607530 **Report Date:** 09/15/16

SAMPLE RESULTS

Lab ID: L1627010-04 Date Collected: 08/26/16 11:00

Client ID: 1607530-B102(S3-S4) Date Received: 08/29/16

Sample Location: NEWINGTON, NH Field Prep: Not Specified

Parameter	Result	Qualifier	Units	RL	MDL	Dilution Factor
Semivolatile Organics by GC/MS - Westborough Lab						
Benzoic Acid	ND		ug/kg	680	--	1
Benzyl Alcohol	ND		ug/kg	210	--	1
Carbazole	ND		ug/kg	210	--	1
Pyridine	ND		ug/kg	830	--	1

Surrogate	% Recovery	Qualifier	Acceptance Criteria
2-Fluorophenol	91		25-120
Phenol-d6	94		10-120
Nitrobenzene-d5	97		23-120
2-Fluorobiphenyl	79		30-120
2,4,6-Tribromophenol	84		10-136
4-Terphenyl-d14	82		18-120

Project Name: EVERSOURCE NH SRP **Lab Number:** L1627010

Project Number: 1607530 **Report Date:** 09/15/16

SAMPLE RESULTS

Lab ID:	L1627010-05	Date Collected:	08/26/16 11:45
Client ID:	1607530-B101(S1-S2)	Date Received:	08/29/16
Sample Location:	NEWINGTON, NH	Field Prep:	Not Specified
Matrix:	Soil	Extraction Method:	EPA 3546
Analytical Method:	1,8270D	Extraction Date:	08/31/16 00:26
Analytical Date:	09/02/16 06:34		
Analyst:	KV		
Percent Solids:	84%		

Parameter	Result	Qualifier	Units	RL	MDL	Dilution Factor
Semivolatile Organics by GC/MS - Westborough Lab						
Acenaphthene	ND		ug/kg	160	--	1
Benzidine	ND		ug/kg	640	--	1
1,2,4-Trichlorobenzene	ND		ug/kg	200	--	1
Hexachlorobenzene	ND		ug/kg	120	--	1
Bis(2-chloroethyl)ether	ND		ug/kg	180	--	1
2-Chloronaphthalene	ND		ug/kg	200	--	1
1,2-Dichlorobenzene	ND		ug/kg	200	--	1
1,3-Dichlorobenzene	ND		ug/kg	200	--	1
1,4-Dichlorobenzene	ND		ug/kg	200	--	1
3,3'-Dichlorobenzidine	ND		ug/kg	200	--	1
2,4-Dinitrotoluene	ND		ug/kg	200	--	1
2,6-Dinitrotoluene	ND		ug/kg	200	--	1
Azobenzene	ND		ug/kg	200	--	1
Fluoranthene	ND		ug/kg	120	--	1
4-Chlorophenyl phenyl ether	ND		ug/kg	200	--	1
4-Bromophenyl phenyl ether	ND		ug/kg	200	--	1
Bis(2-chloroisopropyl)ether	ND		ug/kg	230	--	1
Bis(2-chloroethoxy)methane	ND		ug/kg	210	--	1
Hexachlorobutadiene	ND		ug/kg	200	--	1
Hexachlorocyclopentadiene	ND		ug/kg	560	--	1
Hexachloroethane	ND		ug/kg	160	--	1
Isophorone	ND		ug/kg	180	--	1
Naphthalene	ND		ug/kg	200	--	1
Nitrobenzene	ND		ug/kg	180	--	1
NDPA/DPA	ND		ug/kg	160	--	1
n-Nitrosodi-n-propylamine	ND		ug/kg	200	--	1
Bis(2-ethylhexyl)phthalate	ND		ug/kg	200	--	1
Butyl benzyl phthalate	ND		ug/kg	200	--	1
Di-n-butylphthalate	ND		ug/kg	200	--	1
Di-n-octylphthalate	ND		ug/kg	200	--	1

Project Name: EVERSOURCE NH SRP **Lab Number:** L1627010

Project Number: 1607530 **Report Date:** 09/15/16

SAMPLE RESULTS

Lab ID: L1627010-05 Date Collected: 08/26/16 11:45

Client ID: 1607530-B101(S1-S2) Date Received: 08/29/16

Sample Location: NEWINGTON, NH Field Prep: Not Specified

Parameter	Result	Qualifier	Units	RL	MDL	Dilution Factor
Semivolatile Organics by GC/MS - Westborough Lab						
Diethyl phthalate	ND		ug/kg	200	--	1
Dimethyl phthalate	ND		ug/kg	200	--	1
Benzo(a)anthracene	ND		ug/kg	120	--	1
Benzo(a)pyrene	ND		ug/kg	160	--	1
Benzo(b)fluoranthene	ND		ug/kg	120	--	1
Benzo(k)fluoranthene	ND		ug/kg	120	--	1
Chrysene	ND		ug/kg	120	--	1
Acenaphthylene	ND		ug/kg	160	--	1
Anthracene	ND		ug/kg	120	--	1
Benzo(ghi)perylene	ND		ug/kg	160	--	1
Fluorene	ND		ug/kg	200	--	1
Phenanthrene	ND		ug/kg	120	--	1
Dibenzo(a,h)anthracene	ND		ug/kg	120	--	1
Indeno(1,2,3-cd)pyrene	ND		ug/kg	160	--	1
Pyrene	ND		ug/kg	120	--	1
Biphenyl	ND		ug/kg	440	--	1
Aniline	ND		ug/kg	230	--	1
4-Chloroaniline	ND		ug/kg	200	--	1
1-Methylnaphthalene	ND		ug/kg	200	--	1
2-Nitroaniline	ND		ug/kg	200	--	1
3-Nitroaniline	ND		ug/kg	200	--	1
4-Nitroaniline	ND		ug/kg	200	--	1
Dibenzofuran	ND		ug/kg	200	--	1
2-Methylnaphthalene	ND		ug/kg	230	--	1
n-Nitrosodimethylamine	ND		ug/kg	390	--	1
2,4,6-Trichlorophenol	ND		ug/kg	120	--	1
p-Chloro-m-cresol	ND		ug/kg	200	--	1
2-Chlorophenol	ND		ug/kg	200	--	1
2,4-Dichlorophenol	ND		ug/kg	180	--	1
2,4-Dimethylphenol	ND		ug/kg	200	--	1
2-Nitrophenol	ND		ug/kg	420	--	1
4-Nitrophenol	ND		ug/kg	270	--	1
2,4-Dinitrophenol	ND		ug/kg	940	--	1
4,6-Dinitro-o-cresol	ND		ug/kg	510	--	1
Pentachlorophenol	ND		ug/kg	160	--	1
Phenol	ND		ug/kg	200	--	1
2-Methylphenol	ND		ug/kg	200	--	1
3-Methylphenol/4-Methylphenol	ND		ug/kg	280	--	1
2,4,5-Trichlorophenol	ND		ug/kg	200	--	1

Project Name: EVERSOURCE NH SRP **Lab Number:** L1627010

Project Number: 1607530 **Report Date:** 09/15/16

SAMPLE RESULTS

Lab ID: L1627010-05 Date Collected: 08/26/16 11:45

Client ID: 1607530-B101(S1-S2) Date Received: 08/29/16

Sample Location: NEWINGTON, NH Field Prep: Not Specified

Parameter	Result	Qualifier	Units	RL	MDL	Dilution Factor
Semivolatile Organics by GC/MS - Westborough Lab						
Benzoic Acid	ND		ug/kg	630	--	1
Benzyl Alcohol	ND		ug/kg	200	--	1
Carbazole	ND		ug/kg	200	--	1
Pyridine	ND		ug/kg	780	--	1

Surrogate	% Recovery	Qualifier	Acceptance Criteria
2-Fluorophenol	86		25-120
Phenol-d6	89		10-120
Nitrobenzene-d5	95		23-120
2-Fluorobiphenyl	78		30-120
2,4,6-Tribromophenol	90		10-136
4-Terphenyl-d14	87		18-120

Project Name: EVERSOURCE NH SRP **Lab Number:** L1627010

Project Number: 1607530 **Report Date:** 09/15/16

SAMPLE RESULTS

Lab ID:	L1627010-06	Date Collected:	08/26/16 12:00
Client ID:	1607530-B101(S3-S4)	Date Received:	08/29/16
Sample Location:	NEWINGTON, NH	Field Prep:	Not Specified
Matrix:	Soil	Extraction Method:	EPA 3546
Analytical Method:	1,8270D	Extraction Date:	08/31/16 00:26
Analytical Date:	09/02/16 07:00		
Analyst:	KV		
Percent Solids:	81%		

Parameter	Result	Qualifier	Units	RL	MDL	Dilution Factor
Semivolatile Organics by GC/MS - Westborough Lab						
Acenaphthene	ND		ug/kg	160	--	1
Benzidine	ND		ug/kg	660	--	1
1,2,4-Trichlorobenzene	ND		ug/kg	200	--	1
Hexachlorobenzene	ND		ug/kg	120	--	1
Bis(2-chloroethyl)ether	ND		ug/kg	180	--	1
2-Chloronaphthalene	ND		ug/kg	200	--	1
1,2-Dichlorobenzene	ND		ug/kg	200	--	1
1,3-Dichlorobenzene	ND		ug/kg	200	--	1
1,4-Dichlorobenzene	ND		ug/kg	200	--	1
3,3'-Dichlorobenzidine	ND		ug/kg	200	--	1
2,4-Dinitrotoluene	ND		ug/kg	200	--	1
2,6-Dinitrotoluene	ND		ug/kg	200	--	1
Azobenzene	ND		ug/kg	200	--	1
Fluoranthene	ND		ug/kg	120	--	1
4-Chlorophenyl phenyl ether	ND		ug/kg	200	--	1
4-Bromophenyl phenyl ether	ND		ug/kg	200	--	1
Bis(2-chloroisopropyl)ether	ND		ug/kg	240	--	1
Bis(2-chloroethoxy)methane	ND		ug/kg	220	--	1
Hexachlorobutadiene	ND		ug/kg	200	--	1
Hexachlorocyclopentadiene	ND		ug/kg	580	--	1
Hexachloroethane	ND		ug/kg	160	--	1
Isophorone	ND		ug/kg	180	--	1
Naphthalene	ND		ug/kg	200	--	1
Nitrobenzene	ND		ug/kg	180	--	1
NDPA/DPA	ND		ug/kg	160	--	1
n-Nitrosodi-n-propylamine	ND		ug/kg	200	--	1
Bis(2-ethylhexyl)phthalate	ND		ug/kg	200	--	1
Butyl benzyl phthalate	ND		ug/kg	200	--	1
Di-n-butylphthalate	ND		ug/kg	200	--	1
Di-n-octylphthalate	ND		ug/kg	200	--	1

Project Name: EVERSOURCE NH SRP **Lab Number:** L1627010

Project Number: 1607530 **Report Date:** 09/15/16

SAMPLE RESULTS

Lab ID: L1627010-06 Date Collected: 08/26/16 12:00

Client ID: 1607530-B101(S3-S4) Date Received: 08/29/16

Sample Location: NEWINGTON, NH Field Prep: Not Specified

Parameter	Result	Qualifier	Units	RL	MDL	Dilution Factor
Semivolatile Organics by GC/MS - Westborough Lab						
Diethyl phthalate	ND		ug/kg	200	--	1
Dimethyl phthalate	ND		ug/kg	200	--	1
Benzo(a)anthracene	ND		ug/kg	120	--	1
Benzo(a)pyrene	ND		ug/kg	160	--	1
Benzo(b)fluoranthene	ND		ug/kg	120	--	1
Benzo(k)fluoranthene	ND		ug/kg	120	--	1
Chrysene	ND		ug/kg	120	--	1
Acenaphthylene	ND		ug/kg	160	--	1
Anthracene	ND		ug/kg	120	--	1
Benzo(ghi)perylene	ND		ug/kg	160	--	1
Fluorene	ND		ug/kg	200	--	1
Phenanthrene	ND		ug/kg	120	--	1
Dibenzo(a,h)anthracene	ND		ug/kg	120	--	1
Indeno(1,2,3-cd)pyrene	ND		ug/kg	160	--	1
Pyrene	ND		ug/kg	120	--	1
Biphenyl	ND		ug/kg	460	--	1
Aniline	ND		ug/kg	240	--	1
4-Chloroaniline	ND		ug/kg	200	--	1
1-Methylnaphthalene	ND		ug/kg	200	--	1
2-Nitroaniline	ND		ug/kg	200	--	1
3-Nitroaniline	ND		ug/kg	200	--	1
4-Nitroaniline	ND		ug/kg	200	--	1
Dibenzofuran	ND		ug/kg	200	--	1
2-Methylnaphthalene	ND		ug/kg	240	--	1
n-Nitrosodimethylamine	ND		ug/kg	400	--	1
2,4,6-Trichlorophenol	ND		ug/kg	120	--	1
p-Chloro-m-cresol	ND		ug/kg	200	--	1
2-Chlorophenol	ND		ug/kg	200	--	1
2,4-Dichlorophenol	ND		ug/kg	180	--	1
2,4-Dimethylphenol	ND		ug/kg	200	--	1
2-Nitrophenol	ND		ug/kg	440	--	1
4-Nitrophenol	ND		ug/kg	280	--	1
2,4-Dinitrophenol	ND		ug/kg	970	--	1
4,6-Dinitro-o-cresol	ND		ug/kg	520	--	1
Pentachlorophenol	ND		ug/kg	160	--	1
Phenol	ND		ug/kg	200	--	1
2-Methylphenol	ND		ug/kg	200	--	1
3-Methylphenol/4-Methylphenol	ND		ug/kg	290	--	1
2,4,5-Trichlorophenol	ND		ug/kg	200	--	1

Project Name: EVERSOURCE NH SRP **Lab Number:** L1627010

Project Number: 1607530 **Report Date:** 09/15/16

SAMPLE RESULTS

Lab ID: L1627010-06 Date Collected: 08/26/16 12:00

Client ID: 1607530-B101(S3-S4) Date Received: 08/29/16

Sample Location: NEWINGTON, NH Field Prep: Not Specified

Parameter	Result	Qualifier	Units	RL	MDL	Dilution Factor
Semivolatile Organics by GC/MS - Westborough Lab						
Benzoic Acid	ND		ug/kg	650	--	1
Benzyl Alcohol	ND		ug/kg	200	--	1
Carbazole	ND		ug/kg	200	--	1
Pyridine	ND		ug/kg	810	--	1

Surrogate	% Recovery	Qualifier	Acceptance Criteria
2-Fluorophenol	111		25-120
Phenol-d6	115		10-120
Nitrobenzene-d5	120		23-120
2-Fluorobiphenyl	92		30-120
2,4,6-Tribromophenol	92		10-136
4-Terphenyl-d14	90		18-120

Project Name: EVERSOURCE NH SRP
Project Number: 1607530
Lab Number: L1627010
Report Date: 09/15/16

Method Blank Analysis
Batch Quality Control

Analytical Method: 1,8270D
Analytical Date: 09/02/16 03:36
Analyst: KV

Extraction Method: EPA 3546
Extraction Date: 08/31/16 00:26

Parameter	Result	Qualifier	Units	RL	MDL
Semivolatile Organics by GC/MS - Westborough Lab for sample(s): 01-06 Batch: WG927494-1					
Acenaphthene	ND		ug/kg	130	--
Benzidine	ND		ug/kg	540	--
1,2,4-Trichlorobenzene	ND		ug/kg	160	--
Hexachlorobenzene	ND		ug/kg	98	--
Bis(2-chloroethyl)ether	ND		ug/kg	150	--
2-Chloronaphthalene	ND		ug/kg	160	--
1,2-Dichlorobenzene	ND		ug/kg	160	--
1,3-Dichlorobenzene	ND		ug/kg	160	--
1,4-Dichlorobenzene	ND		ug/kg	160	--
3,3'-Dichlorobenzidine	ND		ug/kg	160	--
2,4-Dinitrotoluene	ND		ug/kg	160	--
2,6-Dinitrotoluene	ND		ug/kg	160	--
Azobenzene	ND		ug/kg	160	--
Fluoranthene	ND		ug/kg	98	--
4-Chlorophenyl phenyl ether	ND		ug/kg	160	--
4-Bromophenyl phenyl ether	ND		ug/kg	160	--
Bis(2-chloroisopropyl)ether	ND		ug/kg	200	--
Bis(2-chloroethoxy)methane	ND		ug/kg	180	--
Hexachlorobutadiene	ND		ug/kg	160	--
Hexachlorocyclopentadiene	ND		ug/kg	470	--
Hexachloroethane	ND		ug/kg	130	--
Isophorone	ND		ug/kg	150	--
Naphthalene	ND		ug/kg	160	--
Nitrobenzene	ND		ug/kg	150	--
NDPA/DPA	ND		ug/kg	130	--
n-Nitrosodi-n-propylamine	ND		ug/kg	160	--
Bis(2-ethylhexyl)phthalate	ND		ug/kg	160	--
Butyl benzyl phthalate	ND		ug/kg	160	--
Di-n-butylphthalate	ND		ug/kg	160	--

Project Name: EVERSOURCE NH SRP
Project Number: 1607530
Lab Number: L1627010
Report Date: 09/15/16

Method Blank Analysis
Batch Quality Control

Analytical Method: 1,8270D
Analytical Date: 09/02/16 03:36
Analyst: KV

Extraction Method: EPA 3546
Extraction Date: 08/31/16 00:26

Parameter	Result	Qualifier	Units	RL	MDL
Semivolatile Organics by GC/MS - Westborough Lab for sample(s): 01-06 Batch: WG927494-1					
Di-n-octylphthalate	ND		ug/kg	160	--
Diethyl phthalate	ND		ug/kg	160	--
Dimethyl phthalate	ND		ug/kg	160	--
Benzo(a)anthracene	ND		ug/kg	98	--
Benzo(a)pyrene	ND		ug/kg	130	--
Benzo(b)fluoranthene	ND		ug/kg	98	--
Benzo(k)fluoranthene	ND		ug/kg	98	--
Chrysene	ND		ug/kg	98	--
Acenaphthylene	ND		ug/kg	130	--
Anthracene	ND		ug/kg	98	--
Benzo(ghi)perylene	ND		ug/kg	130	--
Fluorene	ND		ug/kg	160	--
Phenanthrene	ND		ug/kg	98	--
Dibenzo(a,h)anthracene	ND		ug/kg	98	--
Indeno(1,2,3-cd)pyrene	ND		ug/kg	130	--
Pyrene	ND		ug/kg	98	--
Biphenyl	ND		ug/kg	370	--
Aniline	ND		ug/kg	200	--
4-Chloroaniline	ND		ug/kg	160	--
1-Methylnaphthalene	ND		ug/kg	160	--
2-Nitroaniline	ND		ug/kg	160	--
3-Nitroaniline	ND		ug/kg	160	--
4-Nitroaniline	ND		ug/kg	160	--
Dibenzofuran	ND		ug/kg	160	--
2-Methylnaphthalene	ND		ug/kg	200	--
n-Nitrosodimethylamine	ND		ug/kg	330	--
2,4,6-Trichlorophenol	ND		ug/kg	98	--
p-Chloro-m-cresol	ND		ug/kg	160	--
2-Chlorophenol	ND		ug/kg	160	--

Project Name: EVERSOURCE NH SRP
Project Number: 1607530

Lab Number: L1627010
Report Date: 09/15/16

Method Blank Analysis
Batch Quality Control

Analytical Method: 1,8270D
Analytical Date: 09/02/16 03:36
Analyst: KV

Extraction Method: EPA 3546
Extraction Date: 08/31/16 00:26

Parameter	Result	Qualifier	Units	RL	MDL
Semivolatile Organics by GC/MS - Westborough Lab for sample(s): 01-06 Batch: WG927494-1					
2,4-Dichlorophenol	ND		ug/kg	150	--
2,4-Dimethylphenol	ND		ug/kg	160	--
2-Nitrophenol	ND		ug/kg	350	--
4-Nitrophenol	ND		ug/kg	230	--
2,4-Dinitrophenol	ND		ug/kg	780	--
4,6-Dinitro-o-cresol	ND		ug/kg	420	--
Pentachlorophenol	ND		ug/kg	130	--
Phenol	ND		ug/kg	160	--
2-Methylphenol	ND		ug/kg	160	--
3-Methylphenol/4-Methylphenol	ND		ug/kg	240	--
2,4,5-Trichlorophenol	ND		ug/kg	160	--
Benzoic Acid	ND		ug/kg	530	--
Benzyl Alcohol	ND		ug/kg	160	--
Carbazole	ND		ug/kg	160	--
Pyridine	ND		ug/kg	650	--

Surrogate	%Recovery	Qualifier	Acceptance Criteria
2-Fluorophenol	71		25-120
Phenol-d6	71		10-120
Nitrobenzene-d5	74		23-120
2-Fluorobiphenyl	61		30-120
2,4,6-Tribromophenol	64		10-136
4-Terphenyl-d14	67		18-120

Lab Control Sample Analysis
Batch Quality Control

Project Name: EVERSOURCE NH SRP
Project Number: 1607530
Lab Number: L1627010
Report Date: 09/15/16

Parameter	LCS %Recovery	Qual	LCSD %Recovery	Qual	%Recovery Limits	RPD	Qual	RPD Limits
Semivolatile Organics by GC/MS - Westborough Lab Associated sample(s): 01-06 Batch: WG927494-2 WG927494-3								
Acenaphthene	74		75		31-137	1		50
Benzidine	52		47		10-66	10		50
1,2,4-Trichlorobenzene	73		82		38-107	12		50
Hexachlorobenzene	74		74		40-140	0		50
Bis(2-chloroethyl)ether	75		85		40-140	13		50
2-Chloronaphthalene	74		75		40-140	1		50
1,2-Dichlorobenzene	69		83		40-140	18		50
1,3-Dichlorobenzene	67		80		40-140	18		50
1,4-Dichlorobenzene	68		82		28-104	19		50
3,3'-Dichlorobenzidine	82		76		40-140	8		50
2,4-Dinitrotoluene	**96**	Q	**93**	Q	28-89	3		50
2,6-Dinitrotoluene	83		84		40-140	1		50
Azobenzene	76		77		40-140	1		50
Fluoranthene	80		77		40-140	4		50
4-Chlorophenyl phenyl ether	75		75		40-140	0		50
4-Bromophenyl phenyl ether	74		75		40-140	1		50
Bis(2-chloroisopropyl)ether	73		80		40-140	9		50
Bis(2-chloroethoxy)methane	77		84		40-117	9		50
Hexachlorobutadiene	71		77		40-140	8		50
Hexachlorocyclopentadiene	89		93		40-140	4		50
Hexachloroethane	73		88		40-140	19		50

Lab Control Sample Analysis
Batch Quality Control

Project Name: EVERSOURCE NH SRP
Project Number: 1607530
Lab Number: L1627010
Report Date: 09/15/16

Parameter	LCS %Recovery	Qual	LCSD %Recovery	Qual	%Recovery Limits	RPD	Qual	RPD Limits
Semivolatile Organics by GC/MS - Westborough Lab Associated sample(s): 01-06 Batch: WG927494-2 WG927494-3								
Isophorone	82		89		40-140	8		50
Naphthalene	73		79		40-140	8		50
Nitrobenzene	89		100		40-140	12		50
NDPA/DPA	76		77		36-157	1		50
n-Nitrosodi-n-propylamine	86		92		32-121	7		50
Bis(2-ethylhexyl)phthalate	88		84		40-140	5		50
Butyl benzyl phthalate	95		91		40-140	4		50
Di-n-butylphthalate	89		85		40-140	5		50
Di-n-octylphthalate	98		95		40-140	3		50
Diethyl phthalate	82		79		40-140	4		50
Dimethyl phthalate	83		81		40-140	2		50
Benzo(a)anthracene	79		77		40-140	3		50
Benzo(a)pyrene	86		84		40-140	2		50
Benzo(b)fluoranthene	81		80		40-140	1		50
Benzo(k)fluoranthene	81		75		40-140	8		50
Chrysene	76		74		40-140	3		50
Acenaphthylene	80		81		40-140	1		50
Anthracene	81		80		40-140	1		50
Benzo(ghi)perylene	82		80		40-140	2		50
Fluorene	77		77		40-140	0		50
Phenanthrene	72		72		40-140	0		50

Lab Control Sample Analysis
Batch Quality Control

Project Name: EVERSOURCE NH SRP
Project Number: 1607530
Lab Number: L1627010
Report Date: 09/15/16

Parameter	LCS %Recovery	Qual	LCSD %Recovery	Qual	%Recovery Limits	RPD	Qual	RPD Limits
Semivolatile Organics by GC/MS - Westborough Lab Associated sample(s): 01-06 Batch: WG927494-2 WG927494-3								
Dibenzo(a,h)anthracene	84		83		40-140	1		50
Indeno(1,2,3-cd)pyrene	84		83		40-140	1		50
Pyrene	77		74		35-142	4		50
Biphenyl	80		81		54-104	1		50
Aniline	64		69		40-140	8		50
4-Chloroaniline	66		74		40-140	11		50
1-Methylnaphthalene	72		78		26-130	8		50
2-Nitroaniline	91		91		47-134	0		50
3-Nitroaniline	84		79		26-129	6		50
4-Nitroaniline	86		83		41-125	4		50
Dibenzofuran	75		76		40-140	1		50
2-Methylnaphthalene	74		78		40-140	5		50
1,2,4,5-Tetrachlorobenzene	75		80		40-117	6		50
Acetophenone	83		91		14-144	9		50
n-Nitrosodimethylamine	69		83		22-100	18		50
2,4,6-Trichlorophenol	84		83		30-130	1		50
p-Chloro-m-cresol	90		91		26-103	1		50
2-Chlorophenol	87		99		25-102	13		50
2,4-Dichlorophenol	94		97		30-130	3		50
2,4-Dimethylphenol	95		105		30-130	10		50
2-Nitrophenol	113		123		30-130	8		50

Lab Control Sample Analysis
Batch Quality Control

Project Name: EVERSOURCE NH SRP
Project Number: 1607530
Lab Number: L1627010
Report Date: 09/15/16

Parameter	LCS %Recovery	Qual	LCSD %Recovery	Qual	%Recovery Limits	RPD	Qual	RPD Limits
Semivolatile Organics by GC/MS - Westborough Lab Associated sample(s): 01-06 Batch: WG927494-2 WG927494-3								
4-Nitrophenol	85		83		11-114	2		50
2,4-Dinitrophenol	118		109		4-130	8		50
4,6-Dinitro-o-cresol	126		120		10-130	5		50
Pentachlorophenol	76		76		17-109	0		50
Phenol	81		90		26-90	11		50
2-Methylphenol	88		95		30-130.	8		50
3-Methylphenol/4-Methylphenol	86		91		30-130	6		50
2,4,5-Trichlorophenol	92		93		30-130	1		50
Benzoic Acid	45		45		10-110	0		50
Benzyl Alcohol	85		94		40-140	10		50
Carbazole	79		76		54-128	4		50
Pyridine	54		72		10-93	29		50
Parathion, ethyl	135		131		40-140	3		50
Atrazine	97		97		40-140	0		50
Benzaldehyde	63		75		40-140	17		50
Caprolactam	90		89		15-130	1		50
2,3,4,6-Tetrachlorophenol	88		86		40-140	2		50

Lab Control Sample Analysis
Batch Quality Control

Project Name: EVERSOURCE NH SRP
Project Number: 1607530
Lab Number: L1627010
Report Date: 09/15/16

Parameter	LCS %Recovery	Qual	LCSD %Recovery	Qual	%Recovery Limits	RPD	Qual	RPD Limits
Semivolatile Organics by GC/MS - Westborough Lab Associated sample(s): 01-06 Batch: WG927494-2 WG927494-3								

Surrogate	LCS %Recovery	Qual	LCSD %Recovery	Qual	Acceptance Criteria
2-Fluorophenol	86		97		25-120
Phenol-d6	87		97		10-120
Nitrobenzene-d5	95		102		23-120
2-Fluorobiphenyl	75		76		30-120
2,4,6-Tribromophenol	80		81		10-136
4-Terphenyl-d14	77		74		18-120

PETROLEUM HYDROCARBONS

Project Name: EVERSOURCE NH SRP
Lab Number: L1627010
Project Number: 1607530
Report Date: 09/15/16

SAMPLE RESULTS

Lab ID:	L1627010-01	Date Collected:	08/26/16 09:25
Client ID:	1607530-B103(S1-S2)	Date Received:	08/29/16
Sample Location:	NEWINGTON, NH	Field Prep:	Not Specified
Matrix:	Soil	Extraction Method:	EPA 3546
Analytical Method:	1,8015C(M)	Extraction Date:	08/31/16 20:59
Analytical Date:	09/01/16 20:20		
Analyst:	DV		
Percent Solids:	93%		

Parameter	Result	Qualifier	Units	RL	MDL	Dilution Factor
Petroleum Hydrocarbon Quantitation - Westborough Lab						
TPH	ND		ug/kg	35500	--	1

Surrogate	% Recovery	Qualifier	Acceptance Criteria
o-Terphenyl	54		40-140

Project Name: EVERSOURCE NH SRP **Lab Number:** L1627010

Project Number: 1607530 **Report Date:** 09/15/16

SAMPLE RESULTS

Lab ID:	L1627010-02	Date Collected:	08/26/16 09:55
Client ID:	1607530-B103(S3-S4)	Date Received:	08/29/16
Sample Location:	NEWINGTON, NH	Field Prep:	Not Specified
Matrix:	Soil	Extraction Method:	EPA 3546
Analytical Method:	1,8015C(M)	Extraction Date:	08/31/16 20:59
Analytical Date:	09/01/16 20:53		
Analyst:	DV		
Percent Solids:	92%		

Parameter	Result	Qualifier	Units	RL	MDL	Dilution Factor
Petroleum Hydrocarbon Quantitation - Westborough Lab						
TPH	ND		ug/kg	34100	--	1

Surrogate	% Recovery	Qualifier	Acceptance Criteria
o-Terphenyl	81		40-140

Project Name: EVERSOURCE NH SRP
Project Number: 1607530
Lab Number: L1627010
Report Date: 09/15/16

SAMPLE RESULTS

Lab ID:	L1627010-03	Date Collected:	08/26/16 10:45
Client ID:	1607530-B102(S1-S2)	Date Received:	08/29/16
Sample Location:	NEWINGTON, NH	Field Prep:	Not Specified
Matrix:	Soil	Extraction Method:	EPA 3546
Analytical Method:	1,8015C(M)	Extraction Date:	08/31/16 20:59
Analytical Date:	09/01/16 21:25		
Analyst:	DV		
Percent Solids:	84%		

Parameter	Result	Qualifier	Units	RL	MDL	Dilution Factor
Petroleum Hydrocarbon Quantitation - Westborough Lab						
TPH	ND		ug/kg	39500	--	1

Surrogate	% Recovery	Qualifier	Acceptance Criteria
o-Terphenyl	83		40-140

Project Name: EVERSOURCE NH SRP
Lab Number: L1627010
Project Number: 1607530
Report Date: 09/15/16

SAMPLE RESULTS

Lab ID:	L1627010-04	Date Collected:	08/26/16 11:00
Client ID:	1607530-B102(S3-S4)	Date Received:	08/29/16
Sample Location:	NEWINGTON, NH	Field Prep:	Not Specified
Matrix:	Soil	Extraction Method:	EPA 3546
Analytical Method:	1,8015C(M)	Extraction Date:	08/31/16 20:59
Analytical Date:	09/01/16 21:57		
Analyst:	DV		
Percent Solids:	79%		

Parameter	Result	Qualifier	Units	RL	MDL	Dilution Factor
Petroleum Hydrocarbon Quantitation - Westborough Lab						
TPH	ND		ug/kg	39900	--	1

Surrogate	% Recovery	Qualifier	Acceptance Criteria
o-Terphenyl	78		40-140

Project Name: EVERSOURCE NH SRP
Lab Number: L1627010
Project Number: 1607530
Report Date: 09/15/16

SAMPLE RESULTS

Lab ID:	L1627010-05	Date Collected:	08/26/16 11:45
Client ID:	1607530-B101(S1-S2)	Date Received:	08/29/16
Sample Location:	NEWINGTON, NH	Field Prep:	Not Specified
Matrix:	Soil	Extraction Method:	EPA 3546
Analytical Method:	1,8015C(M)	Extraction Date:	08/31/16 20:59
Analytical Date:	09/01/16 22:29		
Analyst:	DV		
Percent Solids:	84%		

Parameter	Result	Qualifier	Units	RL	MDL	Dilution Factor
Petroleum Hydrocarbon Quantitation - Westborough Lab						
TPH	39000		ug/kg	37500	--	1

Surrogate	% Recovery	Qualifier	Acceptance Criteria
o-Terphenyl	82		40-140

Project Name: EVERSOURCE NH SRP
Lab Number: L1627010
Project Number: 1607530
Report Date: 09/15/16

SAMPLE RESULTS

Lab ID:	L1627010-06	Date Collected:	08/26/16 12:00
Client ID:	1607530-B101(S3-S4)	Date Received:	08/29/16
Sample Location:	NEWINGTON, NH	Field Prep:	Not Specified
Matrix:	Soil	Extraction Method:	EPA 3546
Analytical Method:	1,8015C(M)	Extraction Date:	08/31/16 20:59
Analytical Date:	09/01/16 23:01		
Analyst:	DV		
Percent Solids:	81%		

Parameter	Result	Qualifier	Units	RL	MDL	Dilution Factor
Petroleum Hydrocarbon Quantitation - Westborough Lab						
TPH	ND		ug/kg	39800	--	1

Surrogate	% Recovery	Qualifier	Acceptance Criteria
o-Terphenyl	79		40-140

Project Name: EVERSOURCE NH SRP
Project Number: 1607530

Lab Number: L1627010
Report Date: 09/15/16

Method Blank Analysis
Batch Quality Control

Analytical Method: 1,8015C(M)
Analytical Date: 09/01/16 17:08
Analyst: SR

Extraction Method: EPA 3546
Extraction Date: 08/31/16 19:47

Parameter	Result	Qualifier	Units	RL	MDL
Petroleum Hydrocarbon Quantitation - Westborough Lab for sample(s): 01-06 Batch: WG927867-1					
TPH	ND		ug/kg	33000	--

Surrogate	%Recovery	Qualifier	Acceptance Criteria
o-Terphenyl	85		40-140

Lab Control Sample Analysis

Batch Quality Control

Project Name: EVERSOURCE NH SRP

Project Number: 1607530

Lab Number: L1627010

Report Date: 09/15/16

Parameter	LCS %Recovery	Qual	LCSD %Recovery	Qual	%Recovery Limits	RPD	Qual	RPD Limits
Petroleum Hydrocarbon Quantitation - Westborough Lab Associated sample(s): 01-06 Batch: WG927867-2								
TPH	92		-		40-140	-		40

Surrogate	LCS %Recovery	Qual	LCSD %Recovery	Qual	Acceptance Criteria
o-Terphenyl	89				40-140

PCBS

Project Name: EVERSOURCE NH SRP
Project Number: 1607530
Lab Number: L1627010
Report Date: 09/15/16

SAMPLE RESULTS

Lab ID:	L1627010-01	Date Collected:	08/26/16 09:25
Client ID:	1607530-B103(S1-S2)	Date Received:	08/29/16
Sample Location:	NEWINGTON, NH	Field Prep:	Not Specified
Matrix:	Soil	Extraction Method:	EPA 3546
Analytical Method:	1,8082A	Extraction Date:	08/31/16 18:23
Analytical Date:	09/02/16 22:16	Cleanup Method:	EPA 3665A
Analyst:	JA	Cleanup Date:	09/01/16
Percent Solids:	93%	Cleanup Method:	EPA 3660B
		Cleanup Date:	09/01/16

Parameter	Result	Qualifier	Units	RL	MDL	Dilution Factor	Column
PCB by GC - Westborough Lab							
Aroclor 1016	ND		ug/kg	33.9	--	1	A
Aroclor 1221	ND		ug/kg	33.9	--	1	A
Aroclor 1232	ND		ug/kg	33.9	--	1	A
Aroclor 1242	ND		ug/kg	33.9	--	1	A
Aroclor 1248	ND		ug/kg	33.9	--	1	A
Aroclor 1254	ND		ug/kg	33.9	--	1	A
Aroclor 1260	ND		ug/kg	33.9	--	1	A
Aroclor 1262	ND		ug/kg	33.9	--	1	A
Aroclor 1268	ND		ug/kg	33.9	--	1	A
PCBs, Total	ND		ug/kg	33.9	--	1	A

Surrogate	% Recovery	Qualifier	Acceptance Criteria	Column
2,4,5,6-Tetrachloro-m-xylene	67		30-150	A
Decachlorobiphenyl	67		30-150	A
2,4,5,6-Tetrachloro-m-xylene	72		30-150	B
Decachlorobiphenyl	75		30-150	B

Project Name: EVERSOURCE NH SRP
Project Number: 1607530
Lab Number: L1627010
Report Date: 09/15/16

SAMPLE RESULTS

Lab ID:	L1627010-02	Date Collected:	08/26/16 09:55
Client ID:	1607530-B103(S3-S4)	Date Received:	08/29/16
Sample Location:	NEWINGTON, NH	Field Prep:	Not Specified
Matrix:	Soil	Extraction Method:	EPA 3546
Analytical Method:	1,8082A	Extraction Date:	08/31/16 18:23
Analytical Date:	09/02/16 22:31	Cleanup Method:	EPA 3665A
Analyst:	JA	Cleanup Date:	09/01/16
Percent Solids:	92%	Cleanup Method:	EPA 3660B
		Cleanup Date:	09/01/16

Parameter	Result	Qualifier	Units	RL	MDL	Dilution Factor	Column
PCB by GC - Westborough Lab							
Aroclor 1016	ND		ug/kg	34.4	--	1	A
Aroclor 1221	ND		ug/kg	34.4	--	1	A
Aroclor 1232	ND		ug/kg	34.4	--	1	A
Aroclor 1242	ND		ug/kg	34.4	--	1	A
Aroclor 1248	ND		ug/kg	34.4	--	1	A
Aroclor 1254	ND		ug/kg	34.4	--	1	A
Aroclor 1260	ND		ug/kg	34.4	--	1	A
Aroclor 1262	ND		ug/kg	34.4	--	1	A
Aroclor 1268	ND		ug/kg	34.4	--	1	A
PCBs, Total	ND		ug/kg	34.4	--	1	A

Surrogate	% Recovery	Qualifier	Acceptance Criteria	Column
2,4,5,6-Tetrachloro-m-xylene	78		30-150	A
Decachlorobiphenyl	82		30-150	A
2,4,5,6-Tetrachloro-m-xylene	82		30-150	B
Decachlorobiphenyl	85		30-150	B

Project Name: EVERSOURCE NH SRP
Project Number: 1607530
Lab Number: L1627010
Report Date: 09/15/16

SAMPLE RESULTS

Lab ID:	L1627010-03	Date Collected:	08/26/16 10:45
Client ID:	1607530-B102(S1-S2)	Date Received:	08/29/16
Sample Location:	NEWINGTON, NH	Field Prep:	Not Specified
Matrix:	Soil	Extraction Method:	EPA 3546
Analytical Method:	1,8082A	Extraction Date:	08/31/16 18:23
Analytical Date:	09/02/16 22:45	Cleanup Method:	EPA 3665A
Analyst:	JA	Cleanup Date:	09/01/16
Percent Solids:	84%	Cleanup Method:	EPA 3660B
		Cleanup Date:	09/01/16

Parameter	Result	Qualifier	Units	RL	MDL	Dilution Factor	Column
PCB by GC - Westborough Lab							
Aroclor 1016	ND		ug/kg	39.1	--	1	A
Aroclor 1221	ND		ug/kg	39.1	--	1	A
Aroclor 1232	ND		ug/kg	39.1	--	1	A
Aroclor 1242	ND		ug/kg	39.1	--	1	A
Aroclor 1248	ND		ug/kg	39.1	--	1	A
Aroclor 1254	ND		ug/kg	39.1	--	1	A
Aroclor 1260	ND		ug/kg	39.1	--	1	A
Aroclor 1262	ND		ug/kg	39.1	--	1	A
Aroclor 1268	ND		ug/kg	39.1	--	1	A
PCBs, Total	ND		ug/kg	39.1	--	1	A

Surrogate	% Recovery	Qualifier	Acceptance Criteria	Column
2,4,5,6-Tetrachloro-m-xylene	77		30-150	A
Decachlorobiphenyl	84		30-150	A
2,4,5,6-Tetrachloro-m-xylene	78		30-150	B
Decachlorobiphenyl	93		30-150	B

Project Name: EVERSOURCE NH SRP
Project Number: 1607530
Lab Number: L1627010
Report Date: 09/15/16

SAMPLE RESULTS

Lab ID:	L1627010-04	Date Collected:	08/26/16 11:00
Client ID:	1607530-B102(S3-S4)	Date Received:	08/29/16
Sample Location:	NEWINGTON, NH	Field Prep:	Not Specified
Matrix:	Soil	Extraction Method:	EPA 3546
Analytical Method:	1,8082A	Extraction Date:	09/04/16 06:18
Analytical Date:	09/04/16 16:48	Cleanup Method:	EPA 3665A
Analyst:	KEG	Cleanup Date:	09/04/16
Percent Solids:	79%	Cleanup Method:	EPA 3660B
		Cleanup Date:	09/04/16

Parameter	Result	Qualifier	Units	RL	MDL	Dilution Factor	Column
PCB by GC - Westborough Lab							
Aroclor 1016	ND		ug/kg	41.5	--	1	A
Aroclor 1221	ND		ug/kg	41.5	--	1	A
Aroclor 1232	ND		ug/kg	41.5	--	1	A
Aroclor 1242	ND		ug/kg	41.5	--	1	A
Aroclor 1248	ND		ug/kg	41.5	--	1	A
Aroclor 1254	ND		ug/kg	41.5	--	1	A
Aroclor 1260	ND		ug/kg	41.5	--	1	A
Aroclor 1262	ND		ug/kg	41.5	--	1	A
Aroclor 1268	ND		ug/kg	41.5	--	1	A
PCBs, Total	ND		ug/kg	41.5	--	1	A

Surrogate	% Recovery	Qualifier	Acceptance Criteria	Column
2,4,5,6-Tetrachloro-m-xylene	54		30-150	A
Decachlorobiphenyl	49		30-150	A
2,4,5,6-Tetrachloro-m-xylene	56		30-150	B
Decachlorobiphenyl	62		30-150	B

Project Name: EVERSOURCE NH SRP
Project Number: 1607530
Lab Number: L1627010
Report Date: 09/15/16

SAMPLE RESULTS

Lab ID:	L1627010-05	Date Collected:	08/26/16 11:45
Client ID:	1607530-B101(S1-S2)	Date Received:	08/29/16
Sample Location:	NEWINGTON, NH	Field Prep:	Not Specified
Matrix:	Soil	Extraction Method:	EPA 3546
Analytical Method:	1,8082A	Extraction Date:	08/31/16 18:23
Analytical Date:	09/02/16 23:14	Cleanup Method:	EPA 3665A
Analyst:	JA	Cleanup Date:	09/01/16
Percent Solids:	84%	Cleanup Method:	EPA 3660B
		Cleanup Date:	09/01/16

Parameter	Result	Qualifier	Units	RL	MDL	Dilution Factor	Column
PCB by GC - Westborough Lab							
Aroclor 1016	ND		ug/kg	39.2	--	1	A
Aroclor 1221	ND		ug/kg	39.2	--	1	A
Aroclor 1232	ND		ug/kg	39.2	--	1	A
Aroclor 1242	ND		ug/kg	39.2	--	1	A
Aroclor 1248	ND		ug/kg	39.2	--	1	A
Aroclor 1254	ND		ug/kg	39.2	--	1	A
Aroclor 1260	ND		ug/kg	39.2	--	1	A
Aroclor 1262	ND		ug/kg	39.2	--	1	A
Aroclor 1268	ND		ug/kg	39.2	--	1	A
PCBs, Total	ND		ug/kg	39.2	--	1	A

Surrogate	% Recovery	Qualifier	Acceptance Criteria	Column
2,4,5,6-Tetrachloro-m-xylene	89		30-150	A
Decachlorobiphenyl	92		30-150	A
2,4,5,6-Tetrachloro-m-xylene	96		30-150	B
Decachlorobiphenyl	113		30-150	B

Project Name: EVERSOURCE NH SRP
Project Number: 1607530
Lab Number: L1627010
Report Date: 09/15/16

SAMPLE RESULTS

Lab ID:	L1627010-06	Date Collected:	08/26/16 12:00
Client ID:	1607530-B101(S3-S4)	Date Received:	08/29/16
Sample Location:	NEWINGTON, NH	Field Prep:	Not Specified
Matrix:	Soil	Extraction Method:	EPA 3546
Analytical Method:	1,8082A	Extraction Date:	09/04/16 06:18
Analytical Date:	09/04/16 17:04	Cleanup Method:	EPA 3665A
Analyst:	KEG	Cleanup Date:	09/04/16
Percent Solids:	81%	Cleanup Method:	EPA 3660B
		Cleanup Date:	09/04/16

Parameter	Result	Qualifier	Units	RL	MDL	Dilution Factor	Column
PCB by GC - Westborough Lab							
Aroclor 1016	ND		ug/kg	40.0	--	1	A
Aroclor 1221	ND		ug/kg	40.0	--	1	A
Aroclor 1232	ND		ug/kg	40.0	--	1	A
Aroclor 1242	ND		ug/kg	40.0	--	1	A
Aroclor 1248	ND		ug/kg	40.0	--	1	A
Aroclor 1254	ND		ug/kg	40.0	--	1	A
Aroclor 1260	ND		ug/kg	40.0	--	1	A
Aroclor 1262	ND		ug/kg	40.0	--	1	A
Aroclor 1268	ND		ug/kg	40.0	--	1	A
PCBs, Total	ND		ug/kg	40.0	--	1	A

Surrogate	% Recovery	Qualifier	Acceptance Criteria	Column
2,4,5,6-Tetrachloro-m-xylene	39		30-150	A
Decachlorobiphenyl	32		30-150	A
2,4,5,6-Tetrachloro-m-xylene	38		30-150	B
Decachlorobiphenyl	43		30-150	B

Project Name: EVERSOURCE NH SRP
Project Number: 1607530

Lab Number: L1627010
Report Date: 09/15/16

Method Blank Analysis
Batch Quality Control

Analytical Method: 1,8082A
Analytical Date: 09/02/16 21:33
Analyst: JA

Extraction Method: EPA 3546
Extraction Date: 08/31/16 18:23
Cleanup Method: EPA 3665A
Cleanup Date: 09/01/16
Cleanup Method: EPA 3660B
Cleanup Date: 09/01/16

Parameter	Result	Qualifier	Units	RL	MDL	Column
PCB by GC - Westborough Lab for sample(s): 01-03,05 Batch: WG927841-1						
Aroclor 1016	ND		ug/kg	32.6	--	A
Aroclor 1221	ND		ug/kg	32.6	--	A
Aroclor 1232	ND		ug/kg	32.6	--	A
Aroclor 1242	ND		ug/kg	32.6	--	A
Aroclor 1248	ND		ug/kg	32.6	--	A
Aroclor 1254	ND		ug/kg	32.6	--	A
Aroclor 1260	ND		ug/kg	32.6	--	A
Aroclor 1262	ND		ug/kg	32.6	--	A
Aroclor 1268	ND		ug/kg	32.6	--	A
PCBs, Total	ND		ug/kg	32.6	--	A

Surrogate	%Recovery	Qualifier	Acceptance Criteria	Column
2,4,5,6-Tetrachloro-m-xylene	82		30-150	A
Decachlorobiphenyl	85		30-150	A
2,4,5,6-Tetrachloro-m-xylene	89		30-150	B
Decachlorobiphenyl	93		30-150	B

Project Name: EVERSOURCE NH SRP
Project Number: 1607530
Lab Number: L1627010
Report Date: 09/15/16

Method Blank Analysis
Batch Quality Control

Analytical Method: 1,8082A
Analytical Date: 09/04/16 19:10
Analyst: JA

Extraction Method: EPA 3546
Extraction Date: 09/04/16 02:28
Cleanup Method: EPA 3665A
Cleanup Date: 09/04/16
Cleanup Method: EPA 3660B
Cleanup Date: 09/04/16

Parameter	Result	Qualifier	Units	RL	MDL	Column
PCB by GC - Westborough Lab for sample(s): 04,06 Batch: WG928866-1						
Aroclor 1016	ND		ug/kg	31.9	--	A
Aroclor 1221	ND		ug/kg	31.9	--	A
Aroclor 1232	ND		ug/kg	31.9	--	A
Aroclor 1242	ND		ug/kg	31.9	--	A
Aroclor 1248	ND		ug/kg	31.9	--	A
Aroclor 1254	ND		ug/kg	31.9	--	A
Aroclor 1260	ND		ug/kg	31.9	--	A
Aroclor 1262	ND		ug/kg	31.9	--	A
Aroclor 1268	ND		ug/kg	31.9	--	A
PCBs, Total	ND		ug/kg	31.9	--	A

Surrogate	%Recovery	Qualifier	Acceptance Criteria	Column
2,4,5,6-Tetrachloro-m-xylene	78		30-150	A
Decachlorobiphenyl	74		30-150	A
2,4,5,6-Tetrachloro-m-xylene	74		30-150	B
Decachlorobiphenyl	71		30-150	B

Lab Control Sample Analysis
Batch Quality Control

Project Name: EVERSOURCE NH SRP
Project Number: 1607530
Lab Number: L1627010
Report Date: 09/15/16

Parameter	LCS %Recovery	Qual	LCSD %Recovery	Qual	%Recovery Limits	RPD	Qual	RPD Limits	Column
PCB by GC - Westborough Lab Associated sample(s): 01-03,05 Batch: WG927841-2 WG927841-3									
Aroclor 1016	102		98		40-140	4		50	A
Aroclor 1260	88		87		40-140	1		50	A

Surrogate	LCS %Recovery	Qual	LCSD %Recovery	Qual	Acceptance Criteria	Column
2,4,5,6-Tetrachloro-m-xylene	94		89		30-150	A
Decachlorobiphenyl	86		88		30-150	A
2,4,5,6-Tetrachloro-m-xylene	94		95		30-150	B
Decachlorobiphenyl	93		99		30-150	B

Lab Control Sample Analysis
Batch Quality Control

Project Name: EVERSOURCE NH SRP
Project Number: 1607530
Lab Number: L1627010
Report Date: 09/15/16

Parameter	LCS %Recovery	Qual	LCSD %Recovery	Qual	%Recovery Limits	RPD	Qual	RPD Limits	Column
PCB by GC - Westborough Lab Associated sample(s): 04,06 Batch: WG928866-2 WG928866-3									
Aroclor 1016	72		75		40-140	4		50	A
Aroclor 1260	70		62		40-140	12		50	A

Surrogate	LCS %Recovery	Qual	LCSD %Recovery	Qual	Acceptance Criteria	Column
2,4,5,6-Tetrachloro-m-xylene	72		76		30-150	A
Decachlorobiphenyl	71		73		30-150	A
2,4,5,6-Tetrachloro-m-xylene	71		71		30-150	B
Decachlorobiphenyl	69		69		30-150	B

METALS

Project Name:	EVERSOURCE NH SRP	**Lab Number:**	L1627010
Project Number:	1607530	**Report Date:**	09/15/16

SAMPLE RESULTS

Lab ID:	L1627010-01	Date Collected:	08/26/16 09:25
Client ID:	1607530-B103(S1-S2)	Date Received:	08/29/16
Sample Location:	NEWINGTON, NH	Field Prep:	Not Specified
Matrix:	Soil		
Percent Solids:	93%		

Parameter	Result	Qualifier	Units	RL	MDL	Dilution Factor	Date Prepared	Date Analyzed	Prep Method	Analytical Method	Analyst
Total Metals - Mansfield Lab											
Arsenic, Total	9.0		mg/kg	0.42	--	1	08/31/16 06:40	08/31/16 13:28	EPA 3050B	1,6010C	PS
Barium, Total	30		mg/kg	0.42	--	1	08/31/16 06:40	08/31/16 13:28	EPA 3050B	1,6010C	PS
Cadmium, Total	ND		mg/kg	0.42	--	1	08/31/16 06:40	08/31/16 13:28	EPA 3050B	1,6010C	PS
Chromium, Total	30		mg/kg	0.42	--	1	08/31/16 06:40	08/31/16 13:28	EPA 3050B	1,6010C	PS
Lead, Total	7.2		mg/kg	2.1	--	1	08/31/16 06:40	08/31/16 13:28	EPA 3050B	1,6010C	PS
Mercury, Total	ND		mg/kg	0.07	--	1	08/30/16 09:00	08/30/16 15:06	EPA 7471B	1,7471B	BV
Selenium, Total	ND		mg/kg	0.85	--	1	08/31/16 06:40	08/31/16 13:28	EPA 3050B	1,6010C	PS
Silver, Total	ND		mg/kg	0.42	--	1	08/31/16 06:40	08/31/16 13:28	EPA 3050B	1,6010C	PS

Project Name: EVERSOURCE NH SRP
Lab Number: L1627010
Project Number: 1607530
Report Date: 09/15/16

SAMPLE RESULTS

Lab ID: L1627010-02
Client ID: 1607530-B103(S3-S4)
Sample Location: NEWINGTON, NH
Matrix: Soil
Percent Solids: 92%

Date Collected: 08/26/16 09:55
Date Received: 08/29/16
Field Prep: Not Specified

Parameter	Result	Qualifier	Units	RL	MDL	Dilution Factor	Date Prepared	Date Analyzed	Prep Method	Analytical Method	Analyst
Total Metals - Mansfield Lab											
Arsenic, Total	7.1		mg/kg	0.42	--	1	08/31/16 06:40	08/31/16 14:39	EPA 3050B	1,6010C	PS
Barium, Total	18		mg/kg	0.42	--	1	08/31/16 06:40	08/31/16 14:39	EPA 3050B	1,6010C	PS
Cadmium, Total	ND		mg/kg	0.42	--	1	08/31/16 06:40	08/31/16 14:39	EPA 3050B	1,6010C	PS
Chromium, Total	26		mg/kg	0.42	--	1	08/31/16 06:40	08/31/16 14:39	EPA 3050B	1,6010C	PS
Lead, Total	8.6		mg/kg	2.1	--	1	08/31/16 06:40	08/31/16 14:39	EPA 3050B	1,6010C	PS
Mercury, Total	ND		mg/kg	0.07	--	1	08/30/16 09:00	08/30/16 15:08	EPA 7471B	1,7471B	BV
Selenium, Total	ND		mg/kg	0.84	--	1	08/31/16 06:40	08/31/16 14:39	EPA 3050B	1,6010C	PS
Silver, Total	ND		mg/kg	0.42	--	1	08/31/16 06:40	08/31/16 14:39	EPA 3050B	1,6010C	PS

Project Name:	EVERSOURCE NH SRP	**Lab Number:**	L1627010
Project Number:	1607530	**Report Date:**	09/15/16

SAMPLE RESULTS

Lab ID:	L1627010-03	Date Collected:	08/26/16 10:45
Client ID:	1607530-B102(S1-S2)	Date Received:	08/29/16
Sample Location:	NEWINGTON, NH	Field Prep:	Not Specified
Matrix:	Soil		
Percent Solids:	84%		

Parameter	Result	Qualifier	Units	RL	MDL	Dilution Factor	Date Prepared	Date Analyzed	Prep Method	Analytical Method	Analyst
Total Metals - Mansfield Lab											
Arsenic, Total	12		mg/kg	0.47	--	1	08/31/16 06:40	08/31/16 14:43	EPA 3050B	1,6010C	PS
Barium, Total	44		mg/kg	0.47	--	1	08/31/16 06:40	08/31/16 14:43	EPA 3050B	1,6010C	PS
Cadmium, Total	ND		mg/kg	0.47	--	1	08/31/16 06:40	08/31/16 14:43	EPA 3050B	1,6010C	PS
Chromium, Total	19		mg/kg	0.47	--	1	08/31/16 06:40	08/31/16 14:43	EPA 3050B	1,6010C	PS
Lead, Total	6.8		mg/kg	2.3	--	1	08/31/16 06:40	08/31/16 14:43	EPA 3050B	1,6010C	PS
Mercury, Total	ND		mg/kg	0.08	--	1	08/30/16 09:00	08/30/16 15:10	EPA 7471B	1,7471B	BV
Selenium, Total	ND		mg/kg	0.94	--	1	08/31/16 06:40	08/31/16 14:43	EPA 3050B	1,6010C	PS
Silver, Total	ND		mg/kg	0.47	--	1	08/31/16 06:40	08/31/16 14:43	EPA 3050B	1,6010C	PS

Project Name:	EVERSOURCE NH SRP	**Lab Number:**	L1627010
Project Number:	1607530	**Report Date:**	09/15/16

SAMPLE RESULTS

Lab ID:	L1627010-04	Date Collected:	08/26/16 11:00
Client ID:	1607530-B102(S3-S4)	Date Received:	08/29/16
Sample Location:	NEWINGTON, NH	Field Prep:	Not Specified
Matrix:	Soil		
Percent Solids:	79%		

Parameter	Result	Qualifier	Units	RL	MDL	Dilution Factor	Date Prepared	Date Analyzed	Prep Method	Analytical Method	Analyst
Total Metals - Mansfield Lab											
Arsenic, Total	12		mg/kg	0.49	--	1	08/31/16 06:40	08/31/16 14:47	EPA 3050B	1,6010C	PS
Barium, Total	31		mg/kg	0.49	--	1	08/31/16 06:40	08/31/16 14:47	EPA 3050B	1,6010C	PS
Cadmium, Total	ND		mg/kg	0.49	--	1	08/31/16 06:40	08/31/16 14:47	EPA 3050B	1,6010C	PS
Chromium, Total	18		mg/kg	0.49	--	1	08/31/16 06:40	08/31/16 14:47	EPA 3050B	1,6010C	PS
Lead, Total	8.9		mg/kg	2.4	--	1	08/31/16 06:40	08/31/16 14:47	EPA 3050B	1,6010C	PS
Mercury, Total	ND		mg/kg	0.08	--	1	08/30/16 09:00	08/30/16 15:12	EPA 7471B	1,7471B	BV
Selenium, Total	ND		mg/kg	0.98	--	1	08/31/16 06:40	08/31/16 14:47	EPA 3050B	1,6010C	PS
Silver, Total	ND		mg/kg	0.49	--	1	08/31/16 06:40	08/31/16 14:47	EPA 3050B	1,6010C	PS

Project Name:	EVERSOURCE NH SRP	**Lab Number:**	L1627010
Project Number:	1607530	**Report Date:**	09/15/16

SAMPLE RESULTS

Lab ID:	L1627010-05	Date Collected:	08/26/16 11:45
Client ID:	1607530-B101(S1-S2)	Date Received:	08/29/16
Sample Location:	NEWINGTON, NH	Field Prep:	Not Specified
Matrix:	Soil		
Percent Solids:	84%		

Parameter	Result	Qualifier	Units	RL	MDL	Dilution Factor	Date Prepared	Date Analyzed	Prep Method	Analytical Method	Analyst
Total Metals - Mansfield Lab											
Arsenic, Total	7.4		mg/kg	0.47	--	1	08/31/16 06:40	08/31/16 15:48	EPA 3050B	1,6010C	PS
Barium, Total	28		mg/kg	0.47	--	1	08/31/16 06:40	08/31/16 15:48	EPA 3050B	1,6010C	PS
Cadmium, Total	ND		mg/kg	0.47	--	1	08/31/16 06:40	08/31/16 15:48	EPA 3050B	1,6010C	PS
Chromium, Total	14		mg/kg	0.47	--	1	08/31/16 06:40	08/31/16 15:48	EPA 3050B	1,6010C	PS
Lead, Total	5.7		mg/kg	2.4	--	1	08/31/16 06:40	08/31/16 15:48	EPA 3050B	1,6010C	PS
Mercury, Total	ND		mg/kg	0.08	--	1	08/30/16 09:00	08/30/16 15:19	EPA 7471B	1,7471B	BV
Selenium, Total	ND		mg/kg	0.94	--	1	08/31/16 06:40	08/31/16 15:48	EPA 3050B	1,6010C	PS
Silver, Total	ND		mg/kg	0.47	--	1	08/31/16 06:40	08/31/16 15:48	EPA 3050B	1,6010C	PS

Project Name: EVERSOURCE NH SRP
Lab Number: L1627010
Project Number: 1607530
Report Date: 09/15/16

SAMPLE RESULTS

Lab ID: L1627010-06
Client ID: 1607530-B101(S3-S4)
Sample Location: NEWINGTON, NH
Matrix: Soil
Percent Solids: 81%

Date Collected: 08/26/16 12:00
Date Received: 08/29/16
Field Prep: Not Specified

Parameter	Result	Qualifier	Units	RL	MDL	Dilution Factor	Date Prepared	Date Analyzed	Prep Method	Analytical Method	Analyst
Total Metals - Mansfield Lab											
Arsenic, Total	5.6		mg/kg	0.48	--	1	08/31/16 06:40	08/31/16 15:51	EPA 3050B	1,6010C	PS
Barium, Total	33		mg/kg	0.48	--	1	08/31/16 06:40	08/31/16 15:51	EPA 3050B	1,6010C	PS
Cadmium, Total	ND		mg/kg	0.48	--	1	08/31/16 06:40	08/31/16 15:51	EPA 3050B	1,6010C	PS
Chromium, Total	16		mg/kg	0.48	--	1	08/31/16 06:40	08/31/16 15:51	EPA 3050B	1,6010C	PS
Lead, Total	4.6		mg/kg	2.4	--	1	08/31/16 06:40	08/31/16 15:51	EPA 3050B	1,6010C	PS
Mercury, Total	ND		mg/kg	0.08	--	1	08/30/16 09:00	08/30/16 15:21	EPA 7471B	1,7471B	BV
Selenium, Total	ND		mg/kg	0.96	--	1	08/31/16 06:40	08/31/16 15:51	EPA 3050B	1,6010C	PS
Silver, Total	ND		mg/kg	0.48	--	1	08/31/16 06:40	08/31/16 15:51	EPA 3050B	1,6010C	PS

Project Name: EVERSOURCE NH SRP **Lab Number:** L1627010

Project Number: 1607530 **Report Date:** 09/15/16

Method Blank Analysis
Batch Quality Control

Parameter	Result	Qualifier	Units	RL	MDL	Dilution Factor	Date Prepared	Date Analyzed	Analytical Method	Analyst
Total Metals - Mansfield Lab for sample(s): 01-06 Batch: WG927131-1										
Mercury, Total	ND		mg/kg	0.08	--	1	08/30/16 09:00	08/30/16 14:37	1,7471B	BV

Prep Information

Digestion Method: EPA 7471B

Parameter	Result	Qualifier	Units	RL	MDL	Dilution Factor	Date Prepared	Date Analyzed	Analytical Method	Analyst
Total Metals - Mansfield Lab for sample(s): 01-06 Batch: WG927532-1										
Arsenic, Total	ND		mg/kg	0.40	--	1	08/31/16 06:40	08/31/16 14:15	1,6010C	PS
Barium, Total	ND		mg/kg	0.40	--	1	08/31/16 06:40	08/31/16 14:15	1,6010C	PS
Cadmium, Total	ND		mg/kg	0.40	--	1	08/31/16 06:40	08/31/16 14:15	1,6010C	PS
Chromium, Total	ND		mg/kg	0.40	--	1	08/31/16 06:40	08/31/16 14:15	1,6010C	PS
Lead, Total	ND		mg/kg	2.0	--	1	08/31/16 06:40	08/31/16 14:15	1,6010C	PS
Selenium, Total	ND		mg/kg	0.80	--	1	08/31/16 06:40	08/31/16 14:15	1,6010C	PS
Silver, Total	ND		mg/kg	0.40	--	1	08/31/16 06:40	08/31/16 14:15	1,6010C	PS

Prep Information

Digestion Method: EPA 3050B

Lab Control Sample Analysis
Batch Quality Control

Project Name: EVERSOURCE NH SRP
Project Number: 1607530

Lab Number: L1627010
Report Date: 09/15/16

Parameter	LCS %Recovery	Qual	LCSD %Recovery	Qual	%Recovery Limits	RPD	Qual	RPD Limits
Total Metals - Mansfield Lab Associated sample(s): 01-06 Batch: WG927131-2 SRM Lot Number: D089-540								
Mercury, Total	101		-		57-143	-		
Total Metals - Mansfield Lab Associated sample(s): 01-06 Batch: WG927532-2 SRM Lot Number: D089-540								
Arsenic, Total	100		-		80-120	-		
Barium, Total	93		-		83-117	-		
Cadmium, Total	95		-		82-117	-		
Chromium, Total	96		-		79-121	-		
Lead, Total	95		-		81-119	-		
Selenium, Total	90		-		78-121	-		
Silver, Total	97		-		75-125	-		

Matrix Spike Analysis
Batch Quality Control

Project Name: EVERSOURCE NH SRP
Project Number: 1607530
Lab Number: L1627010
Report Date: 09/15/16

Parameter	Native Sample	MS Added	MS Found	MS %Recovery	Qual	MSD Found	MSD %Recovery	Qual	Recovery Limits	RPD	Qual	RPD Limits
Total Metals - Mansfield Lab Associated sample(s): 01-06 QC Batch ID: WG927131-4 QC Sample: L1626498-01 Client ID: MS Sample												
Mercury, Total	ND	0.144	0.18	**125**	Q	-	-		80-120	-		20
Total Metals - Mansfield Lab Associated sample(s): 01-06 QC Batch ID: WG927532-4 QC Sample: L1627089-01 Client ID: MS Sample												
Arsenic, Total	1.7	9.93	10	84		-	-		75-125	-		20
Barium, Total	25	165	150	76		-	-		75-125	-		20
Cadmium, Total	ND	4.22	2.8	**66**	Q	-	-		75-125	-		20
Chromium, Total	3.5	16.5	14	**63**	Q	-	-		75-125	-		20
Lead, Total	3.3	42.2	30	**63**	Q	-	-		75-125	-		20
Selenium, Total	ND	9.93	7.8	78		-	-		75-125	-		20
Silver, Total	ND	24.8	21	85		-	-		75-125	-		20

Lab Duplicate Analysis
Batch Quality Control

Project Name: EVERSOURCE NH SRP
Project Number: 1607530

Lab Number: L1627010
Report Date: 09/15/16

Parameter	Native Sample	Duplicate Sample	Units	RPD	Qual	RPD Limits
Total Metals - Mansfield Lab Associated sample(s): 01-06 QC Batch ID: WG927131-3 QC Sample: L1626498-01 Client ID: DUP Sample						
Mercury, Total	ND	ND	mg/kg	NC		20
Total Metals - Mansfield Lab Associated sample(s): 01-06 QC Batch ID: WG927532-3 QC Sample: L1627089-01 Client ID: DUP Sample						
Arsenic, Total	1.7	2.0	mg/kg	16		20
Barium, Total	25	29	mg/kg	15		20
Cadmium, Total	ND	ND	mg/kg	NC		20
Chromium, Total	3.5	4.4	mg/kg	**23**	Q	20
Lead, Total	3.3	3.6	mg/kg	9		20
Selenium, Total	ND	ND	mg/kg	NC		20
Silver, Total	ND	ND	mg/kg	NC		20

INORGANICS
&
MISCELLANEOUS

Project Name:	EVERSOURCE NH SRP	**Lab Number:**	L1627010
Project Number:	1607530	**Report Date:**	09/15/16

SAMPLE RESULTS

Lab ID:	L1627010-01	Date Collected:	08/26/16 09:25
Client ID:	1607530-B103(S1-S2)	Date Received:	08/29/16
Sample Location:	NEWINGTON, NH	Field Prep:	Not Specified
Matrix:	Soil		

Test Material Information

Source of Material:	Unknown
Description of Material:	Non-Metallic - Dry Soil
Particle Size:	Fine
Preliminary Burning Time (sec):	120

Parameter	Result	Date Analyzed	Analytical Method	Analyst
Ignitability of Solids - Westborough Lab				
Ignitability	NI	08/30/16 15:55	1,1030	AB

Project Name:	EVERSOURCE NH SRP	**Lab Number:**	L1627010
Project Number:	1607530	**Report Date:**	09/15/16

SAMPLE RESULTS

Lab ID:	L1627010-02	Date Collected:	08/26/16 09:55
Client ID:	1607530-B103(S3-S4)	Date Received:	08/29/16
Sample Location:	NEWINGTON, NH	Field Prep:	Not Specified
Matrix:	Soil		

Test Material Information

Source of Material:	Unknown
Description of Material:	Non-Metallic - Damp Soil
Particle Size:	Medium
Preliminary Burning Time (sec):	120

Parameter	Result	Date Analyzed	Analytical Method	Analyst
Ignitability of Solids - Westborough Lab				
Ignitability	NI	08/30/16 15:55	1,1030	AB

Project Name:	EVERSOURCE NH SRP	**Lab Number:**	L1627010
Project Number:	1607530	**Report Date:**	09/15/16

SAMPLE RESULTS

Lab ID:	L1627010-03	Date Collected:	08/26/16 10:45
Client ID:	1607530-B102(S1-S2)	Date Received:	08/29/16
Sample Location:	NEWINGTON, NH	Field Prep:	Not Specified
Matrix:	Soil		

Test Material Information

Source of Material:	Unknown
Description of Material:	Non-Metallic - Dry Clay
Particle Size:	Medium
Preliminary Burning Time (sec):	120

Parameter	Result	Date Analyzed	Analytical Method	Analyst
Ignitability of Solids - Westborough Lab				
Ignitability	NI	08/30/16 15:55	1,1030	AB

Project Name:	EVERSOURCE NH SRP	**Lab Number:**	L1627010
Project Number:	1607530	**Report Date:**	09/15/16

SAMPLE RESULTS

Lab ID:	L1627010-04	Date Collected:	08/26/16 11:00
Client ID:	1607530-B102(S3-S4)	Date Received:	08/29/16
Sample Location:	NEWINGTON, NH	Field Prep:	Not Specified
Matrix:	Soil		

Test Material Information

Source of Material:	Unknown
Description of Material:	Non-Metallic - Wet Clay
Particle Size:	Medium
Preliminary Burning Time (sec):	120

Parameter	Result	Date Analyzed	Analytical Method	Analyst
Ignitability of Solids - Westborough Lab				
Ignitability	NI	08/30/16 15:55	1,1030	AB

Project Name:	EVERSOURCE NH SRP	**Lab Number:**	L1627010
Project Number:	1607530	**Report Date:**	09/15/16

SAMPLE RESULTS

Lab ID:	L1627010-05	Date Collected:	08/26/16 11:45
Client ID:	1607530-B101(S1-S2)	Date Received:	08/29/16
Sample Location:	NEWINGTON, NH	Field Prep:	Not Specified
Matrix:	Soil		

Test Material Information

Source of Material:	Unknown
Description of Material:	Non-Metallic - Damp Soil
Particle Size:	Medium
Preliminary Burning Time (sec):	120

Parameter	Result	Date Analyzed	Analytical Method	Analyst
Ignitability of Solids - Westborough Lab				
Ignitability	NI	08/30/16 23:45	1,1030	SB

Project Name:	EVERSOURCE NH SRP	**Lab Number:**	L1627010
Project Number:	1607530	**Report Date:**	09/15/16

SAMPLE RESULTS

Lab ID:	L1627010-06	Date Collected:	08/26/16 12:00
Client ID:	1607530-B101(S3-S4)	Date Received:	08/29/16
Sample Location:	NEWINGTON, NH	Field Prep:	Not Specified
Matrix:	Soil		

Test Material Information

Source of Material:	Unknown
Description of Material:	Non-Metallic - Damp Soil
Particle Size:	Medium
Preliminary Burning Time (sec):	120

Parameter	Result	Date Analyzed	Analytical Method	Analyst
Ignitability of Solids - Westborough Lab				
Ignitability	NI	08/30/16 23:45	1,1030	SB

Project Name: EVERSOURCE NH SRP
Project Number: 1607530

Lab Number: L1627010
Report Date: 09/15/16

SAMPLE RESULTS

Lab ID: L1627010-01
Client ID: 1607530-B103(S1-S2)
Sample Location: NEWINGTON, NH
Matrix: Soil

Date Collected: 08/26/16 09:25
Date Received: 08/29/16
Field Prep: Not Specified

Parameter	Result	Qualifier	Units	RL	MDL	Dilution Factor	Date Prepared	Date Analyzed	Analytical Method	Analyst
General Chemistry - Westborough Lab										
Specific Conductance @ 25 C	ND		umhos/cm	10	--	1	-	08/30/16 19:35	1,9050A	AS
Solids, Total	93.3		%	0.100	NA	1	-	08/30/16 16:09	121,2540G	RI
pH (H)	5.7		SU	-	NA	1	-	08/30/16 01:30	1,9045D	MC
Cyanide, Reactive	ND		mg/kg	10	--	1	08/30/16 22:05	08/30/16 23:01	1,7.3	TL
Sulfide, Reactive	ND		mg/kg	10	--	1	08/30/16 22:05	08/30/16 22:53	1,7.3	TL
Oxidation/Reduction Potential	170		mv	-	NA	1	-	08/30/16 02:19	68,1498	MC

Project Name: EVERSOURCE NH SRP
Project Number: 1607530

Lab Number: L1627010
Report Date: 09/15/16

SAMPLE RESULTS

Lab ID: L1627010-02
Client ID: 1607530-B103(S3-S4)
Sample Location: NEWINGTON, NH
Matrix: Soil

Date Collected: 08/26/16 09:55
Date Received: 08/29/16
Field Prep: Not Specified

Parameter	Result	Qualifier	Units	RL	MDL	Dilution Factor	Date Prepared	Date Analyzed	Analytical Method	Analyst
General Chemistry - Westborough Lab										
Specific Conductance @ 25 C	44		umhos/cm	10	--	1	-	08/30/16 19:35	1,9050A	AS
Solids, Total	92.4		%	0.100	NA	1	-	08/30/16 16:09	121,2540G	RI
pH (H)	7.0		SU	-	NA	1	-	08/30/16 01:30	1,9045D	MC
Cyanide, Reactive	ND		mg/kg	10	--	1	08/30/16 22:05	08/30/16 23:01	1,7.3	TL
Sulfide, Reactive	ND		mg/kg	10	--	1	08/30/16 22:05	08/30/16 22:53	1,7.3	TL
Oxidation/Reduction Potential	150		mv	-	NA	1	-	08/30/16 02:19	68,1498	MC

Project Name: EVERSOURCE NH SRP
Project Number: 1607530

Lab Number: L1627010
Report Date: 09/15/16

SAMPLE RESULTS

Lab ID: L1627010-03
Client ID: 1607530-B102(S1-S2)
Sample Location: NEWINGTON, NH
Matrix: Soil

Date Collected: 08/26/16 10:45
Date Received: 08/29/16
Field Prep: Not Specified

Parameter	Result	Qualifier	Units	RL	MDL	Dilution Factor	Date Prepared	Date Analyzed	Analytical Method	Analyst
General Chemistry - Westborough Lab										
Specific Conductance @ 25 C	ND		umhos/cm	10	--	1	-	08/30/16 19:35	1,9050A	AS
Solids, Total	83.6		%	0.100	NA	1	-	08/30/16 16:09	121,2540G	RI
pH (H)	6.3		SU	-	NA	1	-	08/30/16 01:30	1,9045D	MC
Cyanide, Reactive	ND		mg/kg	10	--	1	08/30/16 22:05	08/30/16 23:01	1,7.3	TL
Sulfide, Reactive	ND		mg/kg	10	--	1	08/30/16 22:05	08/30/16 22:53	1,7.3	TL
Oxidation/Reduction Potential	170		mv	-	NA	1	-	08/30/16 02:19	68,1498	MC

Project Name: EVERSOURCE NH SRP
Project Number: 1607530

Lab Number: L1627010
Report Date: 09/15/16

SAMPLE RESULTS

Lab ID: L1627010-04
Client ID: 1607530-B102(S3-S4)
Sample Location: NEWINGTON, NH
Matrix: Soil

Date Collected: 08/26/16 11:00
Date Received: 08/29/16
Field Prep: Not Specified

Parameter	Result	Qualifier	Units	RL	MDL	Dilution Factor	Date Prepared	Date Analyzed	Analytical Method	Analyst
General Chemistry - Westborough Lab										
Specific Conductance @ 25 C	28		umhos/cm	10	--	1	-	08/30/16 19:35	1,9050A	AS
Solids, Total	79.2		%	0.100	NA	1	-	08/30/16 16:09	121,2540G	RI
pH (H)	7.4		SU	-	NA	1	-	08/30/16 01:30	1,9045D	MC
Cyanide, Reactive	ND		mg/kg	10	--	1	08/30/16 22:05	08/30/16 23:01	1,7.3	TL
Sulfide, Reactive	ND		mg/kg	10	--	1	08/30/16 22:05	08/30/16 22:53	1,7.3	TL
Oxidation/Reduction Potential	190		mv	-	NA	1	-	08/30/16 02:19	68,1498	MC

Project Name: EVERSOURCE NH SRP
Project Number: 1607530

Lab Number: L1627010
Report Date: 09/15/16

SAMPLE RESULTS

Lab ID: L1627010-05
Client ID: 1607530-B101(S1-S2)
Sample Location: NEWINGTON, NH
Matrix: Soil

Date Collected: 08/26/16 11:45
Date Received: 08/29/16
Field Prep: Not Specified

Parameter	Result	Qualifier	Units	RL	MDL	Dilution Factor	Date Prepared	Date Analyzed	Analytical Method	Analyst
General Chemistry - Westborough Lab										
Specific Conductance @ 25 C	ND		umhos/cm	10	--	1	-	08/30/16 19:35	1,9050A	AS
Solids, Total	84.2		%	0.100	NA	1	-	08/30/16 16:09	121,2540G	RI
pH (H)	6.2		SU	-	NA	1	-	08/30/16 01:30	1,9045D	MC
Cyanide, Reactive	ND		mg/kg	10	--	1	08/30/16 22:05	08/30/16 23:02	1,7.3	TL
Sulfide, Reactive	ND		mg/kg	10	--	1	08/30/16 22:05	08/30/16 22:54	1,7.3	TL
Oxidation/Reduction Potential	180		mv	-	NA	1	-	08/30/16 02:19	68,1498	MC

Project Name: EVERSOURCE NH SRP
Project Number: 1607530

Lab Number: L1627010
Report Date: 09/15/16

SAMPLE RESULTS

Lab ID: L1627010-06
Client ID: 1607530-B101(S3-S4)
Sample Location: NEWINGTON, NH
Matrix: Soil

Date Collected: 08/26/16 12:00
Date Received: 08/29/16
Field Prep: Not Specified

Parameter	Result	Qualifier	Units	RL	MDL	Dilution Factor	Date Prepared	Date Analyzed	Analytical Method	Analyst
General Chemistry - Westborough Lab										
Specific Conductance @ 25 C	ND		umhos/cm	10	--	1	-	08/30/16 19:35	1,9050A	AS
Solids, Total	80.9		%	0.100	NA	1	-	08/30/16 16:09	121,2540G	RI
pH (H)	6.4		SU	-	NA	1	-	08/30/16 01:30	1,9045D	MC
Cyanide, Reactive	ND		mg/kg	10	--	1	08/30/16 22:05	08/30/16 23:02	1,7.3	TL
Sulfide, Reactive	ND		mg/kg	10	--	1	08/30/16 22:05	08/30/16 22:54	1,7.3	TL
Oxidation/Reduction Potential	170		mv	-	NA	1	-	08/30/16 02:19	68,1498	MC

Project Name: EVERSOURCE NH SRP **Lab Number:** L1627010

Project Number: 1607530 **Report Date:** 09/15/16

Method Blank Analysis
Batch Quality Control

Parameter	Result	Qualifier	Units	RL	MDL	Dilution Factor	Date Prepared	Date Analyzed	Analytical Method	Analyst
General Chemistry - Westborough Lab for sample(s): 01-06 Batch: WG927398-1										
Cyanide, Reactive	ND		mg/kg	10	--	1	08/30/16 22:05	08/30/16 23:00	1,7.3	TL
General Chemistry - Westborough Lab for sample(s): 01-06 Batch: WG927400-1										
Sulfide, Reactive	ND		mg/kg	10	--	1	08/30/16 22:05	08/30/16 22:52	1,7.3	TL

Lab Control Sample Analysis
Batch Quality Control

Project Name: EVERSOURCE NH SRP
Project Number: 1607530
Lab Number: L1627010
Report Date: 09/15/16

Parameter	LCS %Recovery	Qual	LCSD %Recovery	Qual	%Recovery Limits	RPD	Qual	RPD Limits
General Chemistry - Westborough Lab Associated sample(s): 01-06 Batch: WG927110-1								
pH	100		-		99-101	-		
General Chemistry - Westborough Lab Associated sample(s): 01-06 Batch: WG927111-1								
Oxidation/Reduction Potential	98		-		90-110	-		20
General Chemistry - Westborough Lab Associated sample(s): 01-06 Batch: WG927398-2								
Cyanide, Reactive	48		-		30-125	-		40
General Chemistry - Westborough Lab Associated sample(s): 01-06 Batch: WG927400-2								
Sulfide, Reactive	98		-		60-125	-		40
General Chemistry - Westborough Lab Associated sample(s): 01-06 Batch: WG927422-1								
Specific Conductance	100		-		99-101	-		

Lab Duplicate Analysis
Batch Quality Control

Project Name: EVERSOURCE NH SRP
Project Number: 1607530

Lab Number: L1627010
Report Date: 09/15/16

Parameter	Native Sample	Duplicate Sample	Units	RPD	Qual	RPD Limits
General Chemistry - Westborough Lab Associated sample(s): 01-06 QC Batch ID: WG927110-2 QC Sample: L1627010-01 Client ID: 1607530-B103(S1-S2)						
pH (H)	5.7	5.7	SU	0		5
General Chemistry - Westborough Lab Associated sample(s): 01-06 QC Batch ID: WG927111-2 QC Sample: L1627010-01 Client ID: 1607530-B103(S1-S2)						
Oxidation/Reduction Potential	170	170	mv	0		20
General Chemistry - Westborough Lab Associated sample(s): 01-06 QC Batch ID: WG927364-1 QC Sample: L1627010-01 Client ID: 1607530-B103(S1-S2)						
Solids, Total	93.3	92.4	%	1		20
General Chemistry - Westborough Lab Associated sample(s): 01-06 QC Batch ID: WG927398-3 QC Sample: L1627028-01 Client ID: DUP Sample						
Cyanide, Reactive	ND	ND	mg/kg	NC		40
General Chemistry - Westborough Lab Associated sample(s): 01-06 QC Batch ID: WG927400-3 QC Sample: L1627028-01 Client ID: DUP Sample						
Sulfide, Reactive	ND	ND	mg/kg	NC		40
General Chemistry - Westborough Lab Associated sample(s): 01-06 QC Batch ID: WG927422-2 QC Sample: L1627026-01 Client ID: DUP Sample						
Specific Conductance	74	97	umhos/cm	**27**	Q	20

Project Name: EVERSOURCE NH SRP
Project Number: 1607530

Lab Number: L1627010
Report Date: 09/15/16

Sample Receipt and Container Information

Were project specific reporting limits specified? YES

Reagent H2O Preserved Vials Frozen on: 08/29/2016 22:27

Cooler Information Custody Seal

Cooler	
A	Absent
B	Absent

Container Information

Container ID	Container Type	Cooler	pH	Temp deg C	Pres	Seal	Analysis(*)
L1627010-01A	Vial MeOH preserved	A	N/A	2.4	Y	Absent	8260H(14)
L1627010-01B	Vial water preserved	A	N/A	2.4	Y	Absent	8260H(14)
L1627010-01C	Vial water preserved	A	N/A	2.4	Y	Absent	8260H(14)
L1627010-01D	Metals Only - Glass 60mL/2oz unp	A	N/A	2.4	Y	Absent	AS-TI(180),BA-TI(180),AG-TI(180),CR-TI(180),PB-TI(180),SE-TI(180),HG-T(28),CD-TI(180)
L1627010-01E	Glass 60mL/2oz unpreserved	A	N/A	2.4	Y	Absent	8270TCL(14),IGNIT-1030(14),ORP-9045(1),REACTS(14),PCB-8082(14),TS(7),PH-9045(1),REACTCN(14),TPH-DRO-D(14),COND-9050(28)
L1627010-01F	Glass 120ml/4oz unpreserved	A	N/A	2.4	Y	Absent	8270TCL(14),IGNIT-1030(14),ORP-9045(1),REACTS(14),PCB-8082(14),TS(7),PH-9045(1),REACTCN(14),TPH-DRO-D(14),COND-9050(28)
L1627010-01G	Glass 500ml/16oz unpreserved	A	N/A	2.4	Y	Absent	8270TCL(14),IGNIT-1030(14),ORP-9045(1),REACTS(14),PCB-8082(14),TS(7),PH-9045(1),REACTCN(14),TPH-DRO-D(14),COND-9050(28)
L1627010-01H	Plastic 250ml unpreserved	B	N/A	3.1	Y	Absent	SUB-537()
L1627010-01X	Glass 120ml/4oz unpreserved/No H	A	N/A	2.4	Y	Absent	HEXCR-RELOG()
L1627010-02A	Vial MeOH preserved	A	N/A	2.4	Y	Absent	8260H(14)
L1627010-02B	Vial water preserved	A	N/A	2.4	Y	Absent	8260H(14)
L1627010-02C	Vial water preserved	A	N/A	2.4	Y	Absent	8260H(14)
L1627010-02D	Metals Only - Glass 60mL/2oz unp	A	N/A	2.4	Y	Absent	AS-TI(180),BA-TI(180),AG-TI(180),CR-TI(180),PB-TI(180),SE-TI(180),HG-T(28),CD-TI(180)

*Values in parentheses indicate holding time in days

Project Name: EVERSOURCE NH SRP
Project Number: 1607530

Lab Number: L1627010
Report Date: 09/15/16

Container Information

Container ID	Container Type	Cooler	pH	Temp deg C	Pres	Seal	Analysis(*)
L1627010-02E	Glass 60mL/2oz unpreserved	A	N/A	2.4	Y	Absent	8270TCL(14),IGNIT-1030(14),ORP-9045(1),REACTS(14),PCB-8082(14),TS(7),PH-9045(1),REACTCN(14),TPH-DRO-D(14),COND-9050(28)
L1627010-02F	Glass 120ml/4oz unpreserved	A	N/A	2.4	Y	Absent	8270TCL(14),IGNIT-1030(14),ORP-9045(1),REACTS(14),PCB-8082(14),TS(7),PH-9045(1),REACTCN(14),TPH-DRO-D(14),COND-9050(28)
L1627010-02G	Glass 500ml/16oz unpreserved	A	N/A	2.4	Y	Absent	8270TCL(14),IGNIT-1030(14),ORP-9045(1),REACTS(14),PCB-8082(14),TS(7),PH-9045(1),REACTCN(14),TPH-DRO-D(14),COND-9050(28)
L1627010-02H	Plastic 250ml unpreserved	B	N/A	3.1	Y	Absent	SUB-537()
L1627010-02X	Glass 120ml/4oz unpreserved/No H	A	N/A	2.4	Y	Absent	HEXCR-RELOG()
L1627010-03A	Vial MeOH preserved	A	N/A	2.4	Y	Absent	8260H(14)
L1627010-03B	Vial water preserved	A	N/A	2.4	Y	Absent	8260H(14)
L1627010-03C	Vial water preserved	A	N/A	2.4	Y	Absent	8260H(14)
L1627010-03D	Metals Only - Glass 60mL/2oz unp	A	N/A	2.4	Y	Absent	AS-TI(180),BA-TI(180),AG-TI(180),CR-TI(180),PB-TI(180),SE-TI(180),HG-T(28),CD-TI(180)
L1627010-03E	Glass 60mL/2oz unpreserved	A	N/A	2.4	Y	Absent	8270TCL(14),IGNIT-1030(14),ORP-9045(1),REACTS(14),PCB-8082(14),TS(7),PH-9045(1),REACTCN(14),TPH-DRO-D(14),COND-9050(28)
L1627010-03F	Glass 120ml/4oz unpreserved	A	N/A	2.4	Y	Absent	8270TCL(14),IGNIT-1030(14),ORP-9045(1),REACTS(14),PCB-8082(14),TS(7),PH-9045(1),REACTCN(14),TPH-DRO-D(14),COND-9050(28)
L1627010-03G	Glass 500ml/16oz unpreserved	A	N/A	2.4	Y	Absent	8270TCL(14),IGNIT-1030(14),ORP-9045(1),REACTS(14),PCB-8082(14),TS(7),PH-9045(1),REACTCN(14),TPH-DRO-D(14),COND-9050(28)
L1627010-03H	Plastic 250ml unpreserved	B	N/A	3.1	Y	Absent	SUB-537()
L1627010-03X	Glass 120ml/4oz unpreserved/No H	A	N/A	2.4	Y	Absent	HEXCR-RELOG()
L1627010-04A	Vial MeOH preserved	A	N/A	2.4	Y	Absent	8260H(14)
L1627010-04B	Vial water preserved	A	N/A	2.4	Y	Absent	8260H(14)
L1627010-04C	Vial water preserved	A	N/A	2.4	Y	Absent	8260H(14)

*Values in parentheses indicate holding time in days

Project Name: EVERSOURCE NH SRP
Project Number: 1607530

Lab Number: L1627010
Report Date: 09/15/16

Container Information

Container ID	Container Type	Cooler	pH	Temp deg C	Pres	Seal	Analysis(*)
L1627010-04D	Metals Only - Glass 60mL/2oz unp	A	N/A	2.4	Y	Absent	AS-TI(180),BA-TI(180),AG-TI(180),CR-TI(180),PB-TI(180),SE-TI(180),HG-T(28),CD-TI(180)
L1627010-04E	Glass 60mL/2oz unpreserved	A	N/A	2.4	Y	Absent	8270TCL(14),IGNIT-1030(14),ORP-9045(1),REACTS(14),PCB-8082(14),TS(7),PH-9045(1),REACTCN(14),TPH-DRO-D(14),COND-9050(28)
L1627010-04F	Glass 120ml/4oz unpreserved	A	N/A	2.4	Y	Absent	8270TCL(14),IGNIT-1030(14),ORP-9045(1),REACTS(14),PCB-8082(14),TS(7),PH-9045(1),REACTCN(14),TPH-DRO-D(14),COND-9050(28)
L1627010-04G	Glass 500ml/16oz unpreserved	A	N/A	2.4	Y	Absent	8270TCL(14),IGNIT-1030(14),ORP-9045(1),REACTS(14),PCB-8082(14),TS(7),PH-9045(1),REACTCN(14),TPH-DRO-D(14),COND-9050(28)
L1627010-04H	Plastic 250ml unpreserved	B	N/A	3.1	Y	Absent	SUB-537()
L1627010-04X	Glass 120ml/4oz unpreserved/No H	A	N/A	2.4	Y	Absent	HEXCR-RELOG()
L1627010-05A	Vial MeOH preserved	A	N/A	2.4	Y	Absent	8260H(14)
L1627010-05B	Vial water preserved	A	N/A	2.4	Y	Absent	8260H(14)
L1627010-05C	Vial water preserved	A	N/A	2.4	Y	Absent	8260H(14)
L1627010-05D	Metals Only - Glass 60mL/2oz unp	A	N/A	2.4	Y	Absent	AS-TI(180),BA-TI(180),AG-TI(180),CR-TI(180),PB-TI(180),SE-TI(180),HG-T(28),CD-TI(180)
L1627010-05E	Glass 60mL/2oz unpreserved	A	N/A	2.4	Y	Absent	8270TCL(14),IGNIT-1030(14),ORP-9045(1),REACTS(14),PCB-8082(14),TS(7),PH-9045(1),REACTCN(14),TPH-DRO-D(14),COND-9050(28)
L1627010-05F	Glass 120ml/4oz unpreserved	A	N/A	2.4	Y	Absent	8270TCL(14),IGNIT-1030(14),ORP-9045(1),REACTS(14),PCB-8082(14),TS(7),PH-9045(1),REACTCN(14),TPH-DRO-D(14),COND-9050(28)
L1627010-05G	Glass 500ml/16oz unpreserved	A	N/A	2.4	Y	Absent	8270TCL(14),IGNIT-1030(14),ORP-9045(1),REACTS(14),PCB-8082(14),TS(7),PH-9045(1),REACTCN(14),TPH-DRO-D(14),COND-9050(28)
L1627010-05H	Plastic 250ml unpreserved	B	N/A	3.1	Y	Absent	SUB-537()
L1627010-05X	Glass 120ml/4oz unpreserved/No H	A	N/A	2.4	Y	Absent	HEXCR-RELOG()
L1627010-06A	Vial MeOH preserved	A	N/A	2.4	Y	Absent	8260H(14)

*Values in parentheses indicate holding time in days

Project Name: EVERSOURCE NH SRP
Project Number: 1607530

Lab Number: L1627010
Report Date: 09/15/16

Container Information

Container ID	Container Type	Cooler	pH	Temp deg C	Pres	Seal	Analysis(*)
L1627010-06B	Vial water preserved	A	N/A	2.4	Y	Absent	8260H(14)
L1627010-06C	Vial water preserved	A	N/A	2.4	Y	Absent	8260H(14)
L1627010-06D	Metals Only - Glass 60mL/2oz unp	A	N/A	2.4	Y	Absent	AS-TI(180),BA-TI(180),AG-TI(180),CR-TI(180),PB-TI(180),SE-TI(180),HG-T(28),CD-TI(180)
L1627010-06E	Glass 60mL/2oz unpreserved	A	N/A	2.4	Y	Absent	8270TCL(14),IGNIT-1030(14),ORP-9045(1),REACTS(14),PCB-8082(14),TS(7),PH-9045(1),REACTCN(14),TPH-DRO-D(14),COND-9050(28)
L1627010-06F	Glass 120ml/4oz unpreserved	A	N/A	2.4	Y	Absent	8270TCL(14),IGNIT-1030(14),ORP-9045(1),REACTS(14),PCB-8082(14),TS(7),PH-9045(1),REACTCN(14),TPH-DRO-D(14),COND-9050(28)
L1627010-06G	Glass 500ml/16oz unpreserved	A	N/A	2.4	Y	Absent	8270TCL(14),IGNIT-1030(14),ORP-9045(1),REACTS(14),PCB-8082(14),TS(7),PH-9045(1),REACTCN(14),TPH-DRO-D(14),COND-9050(28)
L1627010-06H	Plastic 250ml unpreserved	B	N/A	3.1	Y	Absent	SUB-537()
L1627010-06X	Glass 120ml/4oz unpreserved/No H	A	N/A	2.4	Y	Absent	HEXCR-RELOG()

*Values in parentheses indicate holding time in days

Project Name:	EVERSOURCE NH SRP	**Lab Number:**	L1627010
Project Number:	1607530	**Report Date:**	09/15/16

GLOSSARY

Acronyms

EDL	- Estimated Detection Limit: This value represents the level to which target analyte concentrations are reported as estimated values, when those target analyte concentrations are quantified below the reporting limit (RL). The EDL includes any adjustments from dilutions, concentrations or moisture content, where applicable. The use of EDLs is specific to the analysis of PAHs using Solid-Phase Microextraction (SPME).
EPA	- Environmental Protection Agency.
LCS	- Laboratory Control Sample: A sample matrix, free from the analytes of interest, spiked with verified known amounts of analytes or a material containing known and verified amounts of analytes.
LCSD	- Laboratory Control Sample Duplicate: Refer to LCS.
LFB	- Laboratory Fortified Blank: A sample matrix, free from the analytes of interest, spiked with verified known amounts of analytes or a material containing known and verified amounts of analytes.
MDL	- Method Detection Limit: This value represents the level to which target analyte concentrations are reported as estimated values, when those target analyte concentrations are quantified below the reporting limit (RL). The MDL includes any adjustments from dilutions, concentrations or moisture content, where applicable.
MS	- Matrix Spike Sample: A sample prepared by adding a known mass of target analyte to a specified amount of matrix sample for which an independent estimate of target analyte concentration is available.
MSD	- Matrix Spike Sample Duplicate: Refer to MS.
NA	- Not Applicable.
NC	- Not Calculated: Term is utilized when one or more of the results utilized in the calculation are non-detect at the parameter's reporting unit.
NDPA/DPA	- N-Nitrosodiphenylamine/Diphenylamine.
NI	- Not Ignitable.
NP	- Non-Plastic: Term is utilized for the analysis of Atterberg Limits in soil.
RL	- Reporting Limit: The value at which an instrument can accurately measure an analyte at a specific concentration. The RL includes any adjustments from dilutions, concentrations or moisture content, where applicable.
RPD	- Relative Percent Difference: The results from matrix and/or matrix spike duplicates are primarily designed to assess the precision of analytical results in a given matrix and are expressed as relative percent difference (RPD). Values which are less than five times the reporting limit for any individual parameter are evaluated by utilizing the absolute difference between the values; although the RPD value will be provided in the report.
SRM	- Standard Reference Material: A reference sample of a known or certified value that is of the same or similar matrix as the associated field samples.
STLP	- Semi-dynamic Tank Leaching Procedure per EPA Method 1315.
TIC	- Tentatively Identified Compound: A compound that has been identified to be present and is not part of the target compound list (TCL) for the method and/or program. All TICs are qualitatively identified and reported as estimated concentrations.

Footnotes

1	- The reference for this analyte should be considered modified since this analyte is absent from the target analyte list of the original method.

Terms

Total: With respect to Organic analyses, a 'Total' result is defined as the summation of results for individual isomers or Aroclors. If a 'Total' result is requested, the results of its individual components will also be reported. This is applicable to 'Total' results for methods 8260, 8081 and 8082.

Analytical Method: Both the document from which the method originates and the analytical reference method. (Example: EPA 8260B is shown as 1,8260B.) The codes for the reference method documents are provided in the References section of the Addendum.

Data Qualifiers

A	- Spectra identified as "Aldol Condensation Product".
B	- The analyte was detected above the reporting limit in the associated method blank. Flag only applies to associated field samples that have detectable concentrations of the analyte at less than ten times (10x) the concentration found in the blank. For MCP-related projects, flag only applies to associated field samples that have detectable concentrations of the analyte at less than ten times (10x) the concentration found in the blank. For DOD-related projects, flag only applies to associated field samples that have detectable concentrations of the analyte at less than ten times (10x) the concentration found in the blank AND the analyte was detected above one-half the reporting limit (or above the reporting limit for common lab contaminants) in the associated method blank. For NJ-Air-related projects, flag only applies to associated field samples that have detectable concentrations of the analyte above the reporting limit. For NJ-related projects (excluding Air), flag only applies to associated field samples that have detectable concentrations of the analyte, which was detected above the reporting limit in the associated method blank or above five times the

Project Name:	EVERSOURCE NH SRP	**Lab Number:**	L1627010
Project Number:	1607530	**Report Date:**	09/15/16

Data Qualifiers

reporting limit for common lab contaminants (Phthalates, Acetone, Methylene Chloride, 2-Butanone).

C - Co-elution: The target analyte co-elutes with a known lab standard (i.e. surrogate, internal standards, etc.) for co-extracted analyses.

D - Concentration of analyte was quantified from diluted analysis. Flag only applies to field samples that have detectable concentrations of the analyte.

E - Concentration of analyte exceeds the range of the calibration curve and/or linear range of the instrument.

G - The concentration may be biased high due to matrix interferences (i.e, co-elution) with non-target compound(s). The result should be considered estimated.

H - The analysis of pH was performed beyond the regulatory-required holding time of 15 minutes from the time of sample collection.

I - The lower value for the two columns has been reported due to obvious interference.

M - Reporting Limit (RL) exceeds the MCP CAM Reporting Limit for this analyte.

NJ - Presumptive evidence of compound. This represents an estimated concentration for Tentatively Identified Compounds (TICs), where the identification is based on a mass spectral library search.

P - The RPD between the results for the two columns exceeds the method-specified criteria.

Q - The quality control sample exceeds the associated acceptance criteria. For DOD-related projects, LCS and/or Continuing Calibration Standard exceedences are also qualified on all associated sample results. Note: This flag is not applicable for matrix spike recoveries when the sample concentration is greater than 4x the spike added or for batch duplicate RPD when the sample concentrations are less than 5x the RL. (Metals only.)

R - Analytical results are from sample re-analysis.

RE - Analytical results are from sample re-extraction.

S - Analytical results are from modified screening analysis.

J - Estimated value. This represents an estimated concentration for Tentatively Identified Compounds (TICs).

ND - Not detected at the reporting limit (RL) for the sample.

Report Format: Data Usability Report

Project Name:	EVERSOURCE NH SRP	**Lab Number:**	L1627010
Project Number:	1607530	**Report Date:**	09/15/16

REFERENCES

1 Test Methods for Evaluating Solid Waste: Physical/Chemical Methods. EPA SW-846. Third Edition. Updates I - IV, 2007.

68 Annual Book of ASTM (American Society for Testing and Materials) Standards following extraction by SW-846 EPA Method 9045C under the requirements of MADEP BWSC, WSC-CAM-VIB. August 2004.

121 Standard Methods for the Examination of Water and Wastewater. APHA-AWWA-WEF. Standard Methods Online.

LIMITATION OF LIABILITIES

Alpha Analytical performs services with reasonable care and diligence normal to the analytical testing laboratory industry. In the event of an error, the sole and exclusive responsibility of Alpha Analytical shall be to re-perform the work at it's own expense. In no event shall Alpha Analytical be held liable for any incidental, consequential or special damages, including but not limited to, damages in any way connected with the use of, interpretation of, information or analysis provided by Alpha Analytical.

We strongly urge our clients to comply with EPA protocol regarding sample volume, preservation, cooling, containers, sampling procedures, holding time and splitting of samples in the field.

Certification Information

The following analytes are not included in our Primary NELAP Scope of Accreditation:

Westborough Facility
EPA 624: m/p-xylene, o-xylene
EPA 8260C: NPW: 1,2,4,5-Tetramethylbenzene; 4-Ethyltoluene, Azobenzene; SCM: Iodomethane (methyl iodide), Methyl methacrylate, 1,2,4,5-Tetramethylbenzene; 4-Ethyltoluene.
EPA 8270D: NPW: Dimethylnaphthalene,1,4-Diphenylhydrazine; SCM: Dimethylnaphthalene,1,4-Diphenylhydrazine.
EPA 300: DW: Bromide
EPA 6860: NPW and SCM: Perchlorate
EPA 9010: NPW and SCM: Amenable Cyanide Distillation
EPA 9012B: NPW: Total Cyanide
EPA 9050A: NPW: Specific Conductance
SM3500: NPW: Ferrous Iron
SM4500: NPW: Amenable Cyanide, Dissolved Oxygen; SCM: Total Phosphorus, TKN, NO2, NO3.
SM5310C: DW: Dissolved Organic Carbon

Mansfield Facility
SM 2540D: TSS
EPA 3005A NPW
EPA 8082A: NPW: PCB: 1, 5, 31, 87,101, 110, 141, 151, 153, 180, 183, 187.
EPA TO-15: Halothane, 2,4,4-Trimethyl-2-pentene, 2,4,4-Trimethyl-1-pentene, Thiophene, 2-Methylthiophene, 3-Methylthiophene, 2-Ethylthiophene, 1,2,3-Trimethylbenzene, Indan, Indene, 1,2,4,5-Tetramethylbenzene, Benzothiophene, 1-Methylnaphthalene.
Biological Tissue Matrix: ***EPA 3050B***

The following analytes are included in our Massachusetts DEP Scope of Accreditation

Westborough Facility:

Drinking Water
EPA 300.0: Nitrate-N, Fluoride, Sulfate; **EPA 353.2**: Nitrate-N, Nitrite-N; **SM4500NO3-F**: Nitrate-N, Nitrite-N; **SM4500F-C, SM4500CN-CE, EPA 180.1, SM2130B, SM4500Cl-D, SM2320B, SM2540C, SM4500H-B**
EPA 332: Perchlorate; **EPA 524.2:** THMs and VOCs; **EPA 504.1:** EDB, DBCP.
Microbiology: **SM9215B; SM9223-P/A, SM9223B-Colilert-QT,SM9222D**.

Non-Potable Water
SM4500H,B, EPA 120.1, SM2510B, SM2540C, SM2320B, SM4500CL-E, SM4500F-BC, SM4500NH3-BH, **EPA 350.1**: Ammonia-N, **LACHAT 10-107-06-1-B**: Ammonia-N, **SM4500NO3-F, EPA 353.2**: Nitrate-N**, EPA 351.1, SM4500P-E, SM4500P-B, E, SM4500SO4-E, SM5220D, EPA 410.4, SM5210B, SM5310C, SM4500CL-D, EPA 1664, EPA 420.1, SM4500-CN-CE, SM2540D.**
EPA 624: Volatile Halocarbons & Aromatics,
EPA 608: Chlordane, Toxaphene, Aldrin, alpha-BHC, beta-BHC, gamma-BHC, delta-BHC, Dieldrin, DDD, DDE, DDT, Endosulfan I, Endosulfan II, Endosulfan sulfate, Endrin, Endrin Aldehyde, Heptachlor, Heptachlor Epoxide, PCBs
EPA 625: SVOC (Acid/Base/Neutral Extractables), **EPA 600/4-81-045**: PCB-Oil.
Microbiology: **SM9223B-Colilert-QT; Enterolert-QT, SM9222D-MF**.

Mansfield Facility:

Drinking Water
EPA 200.7: Ba, Be, Cd, Cr, Cu, Ni, Na, Ca. **EPA 200.8:** Sb, As, Ba, Be, Cd, Cr, Cu, Pb, Ni, Se, TL. **EPA 245.1** Hg.

Non-Potable Water
EPA 200.7: Al, Sb, As, Be, Cd, Ca, Cr, Co, Cu, Fe, Pb, Mg, Mn, Mo, Ni, K, Se, Ag, Na, Sr, TL, Ti, V, Zn.
EPA 200.8: Al, Sb, As, Be, Cd, Cr, Cu, Pb, Mn, Ni, Se, Ag, TL, Zn.
EPA 245.1 Hg.
SM2340B

For a complete listing of analytes and methods, please contact your Alpha Project Manager.

08/29/16 L1627010

Chain-of-Custody Record

Laboratory: Alpha

Laboratory Job # (Lab use only)

GEI Consultants
400 Unicorn Park Drive
Woburn, MA 01801
PH: 781.721.4000
FX: 781.721.4073

Project Information

Project Name: Eversource NH SRP
Project Location: Newington, NH
Project Number: 1607530
Project Manager: Mike Sabulis
(office: 781-721-4114) (cell: 508-633-9544)

Page 1 of 1

Send Report to: Jess Englehart
Send EDD to: labdata@geiconsultants.com

MCP PRESUMPTIVE CERTAINTY REQUIRED -- **YES** NO

If Yes, Are MCP Analytical Methods Required? **YES** NO NA
If Yes, Are Drinking Water Samples Submitted? YES **NO** NA
If Yes, Have You Met Minimum Field QC Requirements? **YES** NO **NA**

Sample Handling
Samples Field Filtered: YES NO **NA**
Sampled Shipped With Ice: **YES** NO

Lab Sample Number	GEI Sample ID	Collection Date	Collection Time	Matrix	No. of Bottles	Sampler(s) Initials	VOC (MeOH)	SVOCs	TPH (8100M)	PCBs	RCRA 8Metals + TCLP (if necessary)*	Cond/Corr/Ignitability	Sulfide+Cyanide Reactivity	Hex Cr w/ pH and redox (if necessary)**		Sample Specific Remarks
	1607530-B103(S1-S2)	8/26/16	0925	SO	8	MEG	X	X	X	X	X	X	X	X		
	-B103(S3-S4)	↓	0955	↓	↓	↓	↓	↓	↓	↓	↓	↓	↓	↓		
	B102(S1-S2)	↓	1045	↓	↓	↓	↓	↓	↓	↓	↓	↓	↓	↓		
	B102(S3-S4)	↓	1100	↓	↓	↓	↓	↓	↓	↓	↓	↓	↓	↓		
	B101(S1-S2)	↓	1145	↓	↓	↓	↓	↓	↓	↓	↓	↓	↓	↓		
	B101(S3-S4)	↓	1200	↓	↓	↓	↓	↓	↓	↓	↓	↓	↓	↓		

MCP Level Needed: GEI requires the most stringent Method 1 MCP standard be met for all analytes whenever possible.

Relinquished by sampler: (signature)	Date:	Time:	Received by: (signature)
1. Molly Green	8/27/16	14:50	1. GEI Fridge
Relinquished by: (signature)	Date:	Time:	Received by: (signature)
2. GEI Fridge	8/29/16	1120	2. T Gelhart
Relinquished by: (signature)	Date:	Time:	Received by: (signature)
3. T Gelhart	8/29/16	1120	3. Chris Hayes GEI
Relinquished by: (signature)	Date:	Time:	Received by: (signature)
4. Chris Hayes GEI	8/29/16	17:20	4. Rebecca Lutty

Turnaround Time (Business days):
Normal _X_ Other ____
10-Day ____ 7-Day ____
5-Day ____ 3-Day ____

Before submitting rush turnaround samples, you **must** notify the laboratory to confirm that the TAT can be achieved.

Additional Requirements/Comments/Remarks:
*Please run TCLP on analyses that exceed 20x rule.
**Please run Hex Cr if total Cr exceeds 100ppm. Please run ORP ASAP as it has a 24-hr hold time.

08/29/16 L1627010

Chain-of-Custody Record

Laboratory: Alpha

Laboratory Job # (Lab use only)

GEI Consultants
400 Unicorn Park Drive
Woburn, MA 01801
PH: 781.721.4000
FX: 781.721.4073

Project Information

Project Name: Eversource NH SRP
Project Location: Newington, NH
Project Number: 1607530
Project Manager: Mike Sabulis
(office: 781-721-4114) (cell: 508-633-9544)

Send Report to: Jess Englehart
Send EDD to: labdata@geiconsultants.com

Sample Handling

Samples Field Filtered: YES NO **NA**

Sampled Shipped With Ice: **YES** NO

MCP PRESUMPTIVE CERTAINTY REQUIRED -- **YES** NO

If Yes, Are MCP Analytical Methods Required? **YES** NO NA
If Yes, Are Drinking Water Samples Submitted? YES **NO** NA
If Yes, Have You Met Minimum Field QC Requirements? **YES** NO **NA**

Lab Sample Number	GEI Sample ID	Collection Date	Collection Time	Matrix	No. of Bottles	Sampler(s) Initials	Preservative: —	Preservative: —	Analysis: PFOS	Analysis: PFOA	Sample Specific Remarks
	1607530-B103(S1-S2)	8/26/16	0925	SO	1	MEG			X	X	
	B103(S3-S4)	↓	0955	↓	↓	↓			↓	↓	
	B102(S1-S2)	↓	1045	↓	↓	↓			↓	↓	
	B102(S3-S4)	↓	1100	↓	↓	↓			↓	↓	
	B101(S1-S2)	↓	1145	↓	↓	↓			↓	↓	
	B101(S3-S4)	↓	1200	↓	↓	↓			↓	↓	

MCP Level Needed: GEI requires the most stringent Method 1 MCP standard be met for all analytes whenever possible.

Relinquished by sampler: (signature)	Date:	Time:	Received by: (signature)
1. Molly Green	8/27/16	14:50	1. GEI Fridge
Relinquished by: (signature) 2. GEI Fridge	8/29/16	1120	2. TGilhart
Relinquished by: (signature) 3. TGilhart	8/29/16	1120	3. Chad Hayes ABL
Relinquished by: (signature) 4. Chad Hayes ABL	8/29/16	17:20	4. [illegible]

Turnaround Time (Business days):

Normal _X__ Other ____
10-Day ____ 7-Day ____
5-Day ____ 3-Day ____

Before submitting rush turnaround samples, you **must** notify the laboratory to confirm that the TAT can be achieved.

Additional Requirements/Comments/Remarks:

September 15, 2016

Vista Work Order No. 1601099

Ms. Karyn Raymond
Alpha Analytical Laboratory
8 Walkup Drive
Westborough, MA 01581

Dear Ms. Raymond,

Enclosed are the amended results for the sample set received at Vista Analytical Laboratory on August 31, 2016. This sample set was analyzed on a rush turn-around time. The SDG Number is L1627010.

Vista Analytical Laboratory is committed to serving you effectively. If you require additional information, please contact me at 916-673-1520 or by email at mmaier@vista-analytical.com.

Thank you for choosing Vista as part of your analytical support team.

Sincerely,

Karen Lopez for

Martha Maier
Laboratory Director

Vista Analytical Laboratory certifies that the report herein meets all the requirements set forth by NELAP for those applicable test methods. Results relate only to the samples as received by the laboratory. This report should not be reproduced except in full without the written approval of Vista.

SDG Number L1627010
Vista Work Order No. 1601099
Case Narrative

Sample Condition on Receipt:

Six soil samples were received in good condition and within the method temperature requirements. The samples were received and stored securely in accordance with Vista standard operating procedures and EPA methodology. This report was amended to reflect Alpha job number L1627010 rather than L1626010.

Analytical Notes:

Modified EPA Method 537

The samples were extracted and analyzed for PFOA and PFOS using Modified EPA Method 537. The results include both linear and branched isomers.

Holding Times

The samples were extracted and analyzed within the method hold times.

Quality Control

The Initial Calibration and Continuing Calibration Verifications met the acceptance criteria.

A Method Blank and Ongoing Precision and Recovery (OPR) sample were extracted and analyzed with the preparation batch. No analytes were detected in the Method Blank above the Reporting Limit. The OPR recoveries were within the method acceptance criteria.

The recoveries of all internal standards in the QC and field samples were within the acceptance criteria.

TABLE OF CONTENTS

Case Narrative..... 1

Table of Contents..... 3

Sample Inventory..... 4

Analytical Results..... 5

Qualifiers..... 14

Certifications..... 15

Sample Receipt..... 18

Sample Inventory Report

Vista Sample ID	Client Sample ID	Sampled	Received	Components/Containers
1601099-01	1607530-B103(S1-S2)	26-Aug-16 09:25	31-Aug-16 09:33	HDPE Jar, 4 oz
1601099-02	1607530-B103(S3-S4)	26-Aug-16 09:55	31-Aug-16 09:33	HDPE Jar, 4 oz
1601099-03	1607530-B102(S1-S2)	26-Aug-16 10:45	31-Aug-16 09:33	HDPE Jar, 4 oz
1601099-04	1607530-B102(S3-S4)	26-Aug-16 11:00	31-Aug-16 09:33	HDPE Jar, 4 oz
1601099-05	1607530-B101(S1-S2)	26-Aug-16 11:45	31-Aug-16 09:33	HDPE Jar, 4 oz
1601099-06	1607530-B101(S3-S4)	26-Aug-16 12:00	31-Aug-16 09:33	HDPE Jar, 4 oz

Vista Project: 1601099

ANALYTICAL RESULTS

Sample ID: Method Blank — VAL - PFAS

Matrix:	Solid	QC Batch:	B6I0041	Lab Sample:	B6I0041-BLK1
Sample Size:	1.00 g	Date Extracted:	08-Sep-2016 14:54	Date Analyzed:	12-Sep-16 19:47 Column: BEH C18 Analyst: AC

Analyte	Conc. (ng/g)	RL	Qualifiers
PFOA	ND	2.00	
PFOS	ND	2.00	

RL - Reporting limit

	Labeled Standard	%R	LCL-UCL	Qualifiers
IS	13C2-PFOA	124	60 - 150	
IS	13C8-PFOS	109	60 - 150	

LCL-UCL - Lower control limit - upper control limit
The results are reported in dry weight.
The sample size is reported in wet weight.
Results reported to RL.
When reported, PFBS, PFHxS and PFOS include both linear and branched isomers. Only the linear isomer is reported for all other analytes.

Sample ID: OPR

VAL - PFAS

Matrix:	Solid	QC Batch:	B6I0041	Lab Sample:	B6I0041-BS1
Sample Size:	1.00 g	Date Extracted:	08-Sep-2016 14:54	Date Analyzed:	12-Sep-16 18:56 Column: BEH C18 Analyst: AC

Analyte	Amt Found (ng/g)	Spike Amt	%R	Limits		Labeled Standard	%R	LCL-UCL
PFOA	9.89	10.0	98.9	70 - 130	IS	13C2-PFOA	123	60 - 150
PFOS	10.7	10.0	107	70 - 130	IS	13C8-PFOS	105	60 - 150

LCL-UCL - Lower control limit - upper control limit

Sample ID: 1607530-B103(S1-S2) VAL - PFAS

Client Data		Sample Data		Laboratory Data			
Name:	Alpha Analytical Laboratory	Matrix:	Soil	Lab Sample:	1601099-01	Date Received:	31-Aug-2016 9:33
Project:		Sample Size:	1.46 g	QC Batch:	B6I0041	Date Extracted:	08-Sep-2016 14:54
Date Collected:	26-Aug-2016 9:25	% Solids:	71.0	Date Analyzed:	13-Sep-16 02:56 Column: BEH C18 Analyst: AC		

Analyte	Conc. (ng/g)	RL	Qualifiers
PFOA	ND	1.93	
PFOS	ND	1.93	

	Labeled Standard	%R	LCL-UCL	Qualifiers
IS	13C2-PFOA	137	60 - 150	
IS	13C8-PFOS	76.3	60 - 150	

RL - Reporting limit

LCL-UCL - Lower control limit - upper control limit
The results are reported in dry weight.
The sample size is reported in wet weight.
Results reported to RL.
When reported, PFBS, PFHxS and PFOS include both linear and branched isomers. Only the linear isomer is reported for all other analytes.

Sample ID: 1607530-B103(S3-S4) VAL - PFAS

Client Data		Sample Data		Laboratory Data			
Name:	Alpha Analytical Laboratory	Matrix:	Soil	Lab Sample:	1601099-02	Date Received:	31-Aug-2016 9:33
Project:		Sample Size:	1.23 g	QC Batch:	B6I0041	Date Extracted:	08-Sep-2016 14:54
Date Collected:	26-Aug-2016 9:55	% Solids:	80.4	Date Analyzed:	13-Sep-16 03:09 Column: BEH C18 Analyst: AC		

Analyte	Conc. (ng/g)	RL	Qualifiers
PFOA	ND	2.02	
PFOS	ND	2.02	

	Labeled Standard	%R	LCL-UCL	Qualifiers
IS	13C2-PFOA	130	60 - 150	
IS	13C8-PFOS	81.7	60 - 150	

RL - Reporting limit

LCL-UCL - Lower control limit - upper control limit
The results are reported in dry weight.
The sample size is reported in wet weight.
Results reported to RL.
When reported, PFBS, PFHxS and PFOS include both linear and branched isomers. Only the linear isomer is reported for all other analytes.

Sample ID: 1607530-B102(S1-S2) VAL - PFAS

Client Data		Sample Data		Laboratory Data			
Name:	Alpha Analytical Laboratory	Matrix:	Soil	Lab Sample:	1601099-03	Date Received:	31-Aug-2016 9:33
Project:		Sample Size:	1.37 g	QC Batch:	B6I0041	Date Extracted:	08-Sep-2016 14:54
Date Collected:	26-Aug-2016 10:45	% Solids:	75.0	Date Analyzed:	13-Sep-16 03:21 Column: BEH C18 Analyst: AC		

Analyte	Conc. (ng/g)	RL	Qualifiers
PFOA	ND	1.95	
PFOS	ND	1.95	

	Labeled Standard	%R	LCL-UCL	Qualifiers
IS	13C2-PFOA	150	60 - 150	
IS	13C8-PFOS	99.6	60 - 150	

RL - Reporting limit

LCL-UCL - Lower control limit - upper control limit
The results are reported in dry weight.
The sample size is reported in wet weight.
Results reported to RL.
When reported, PFBS, PFHxS and PFOS include both linear and branched isomers. Only the linear isomer is reported for all other analytes.

Sample ID: 1607530-B102(S3-S4) VAL - PFAS

Client Data		Sample Data		Laboratory Data			
Name:	Alpha Analytical Laboratory	Matrix:	Soil	Lab Sample:	1601099-04	Date Received:	31-Aug-2016 9:33
Project:		Sample Size:	1.36 g	QC Batch:	B6I0041	Date Extracted:	08-Sep-2016 14:54
Date Collected:	26-Aug-2016 11:00	% Solids:	75.3	Date Analyzed:	13-Sep-16 03:34 Column: BEH C18 Analyst: AC		

Analyte	Conc. (ng/g)	RL	Qualifiers
PFOA	ND	1.95	
PFOS	ND	1.95	

	Labeled Standard	%R	LCL-UCL	Qualifiers
IS	13C2-PFOA	141	60 - 150	
IS	13C8-PFOS	108	60 - 150	

RL - Reporting limit

LCL-UCL - Lower control limit - upper control limit
The results are reported in dry weight.
The sample size is reported in wet weight.
Results reported to RL.
When reported, PFBS, PFHxS and PFOS include both linear and branched isomers. Only the linear isomer is reported for all other analytes.

Sample ID: 1607530-B101(S1-S2) VAL - PFAS

Client Data		Sample Data		Laboratory Data			
Name:	Alpha Analytical Laboratory	Matrix:	Soil	Lab Sample:	1601099-05	Date Received:	31-Aug-2016 9:33
Project:		Sample Size:	1.38 g	QC Batch:	B6I0041	Date Extracted:	08-Sep-2016 14:54
Date Collected:	26-Aug-2016 11:45	% Solids:	74.1	Date Analyzed:	13-Sep-16 03:47 Column: BEH C18 Analyst: AC		

Analyte	Conc. (ng/g)	RL	Qualifiers
PFOA	ND	1.96	
PFOS	ND	1.96	

	Labeled Standard	%R	LCL-UCL	Qualifiers
IS	13C2-PFOA	135	60 - 150	
IS	13C8-PFOS	103	60 - 150	

RL - Reporting limit

LCL-UCL - Lower control limit - upper control limit
The results are reported in dry weight.
The sample size is reported in wet weight.
Results reported to RL.
When reported, PFBS, PFHxS and PFOS include both linear and branched isomers. Only the linear isomer is reported for all other analytes.

Sample ID: 1607530-B101(S3-S4) VAL - PFAS

Client Data		Sample Data		Laboratory Data			
Name:	Alpha Analytical Laboratory	Matrix:	Soil	Lab Sample:	1601099-06	Date Received:	31-Aug-2016 9:33
Project:		Sample Size:	1.30 g	QC Batch:	B6I0041	Date Extracted:	08-Sep-2016 14:54
Date Collected:	26-Aug-2016 12:00	% Solids:	78.5	Date Analyzed:	13-Sep-16 03:59 Column: BEH C18 Analyst: AC		

Analyte	Conc. (ng/g)	RL	Qualifiers
PFOA	ND	1.96	
PFOS	ND	1.96	

	Labeled Standard	%R	LCL-UCL	Qualifiers
IS	13C2-PFOA	148	60 - 150	
IS	13C8-PFOS	98.0	60 - 150	

RL - Reporting limit

LCL-UCL - Lower control limit - upper control limit
The results are reported in dry weight.
The sample size is reported in wet weight.
Results reported to RL.
When reported, PFBS, PFHxS and PFOS include both linear and branched isomers. Only the linear isomer is reported for all other analytes.

DATA QUALIFIERS & ABBREVIATIONS

B	**This compound was also detected in the method blank.**
D	**Dilution**
E	**The associated compound concentration exceeded the calibration range of the instrument.**
H	**Recovery and/or RPD was outside laboratory acceptance limits.**
I	**Chemical Interference**
J	**The amount detected is below the Reporting Limit/LOQ.**
*****	**See Cover Letter**
Conc.	**Concentration**
NA	**Not applicable**
ND	**Not Detected**
TEQ	**Toxic Equivalency**

Unless otherwise noted, solid sample results are reported in dry weight. Tissue samples are reported in wet weight.

CERTIFICATIONS

Accrediting Authority	Certificate Number
California Department of Health – ELAP	2892
DoD ELAP - A2LA Accredited - ISO/IEC 17025:2005	3091.01
Florida Department of Health	E87777
Hawaii Department of Health	N/A
Louisiana Department of Environmental Quality	01977
Maine Department of Health	2014022
Nevada Division of Environmental Protection	CA004132015-1
New Jersey Department of Environmental Protection	CA003
New York Department of Health	11411
Oregon Laboratory Accreditation Program	4042-004
Pennsylvania Department of Environmental Protection	012
South Carolina Department of Health	87002001
Texas Commission on Environmental Quality	T104704189-15-6
Virginia Department of General Services	7923
Washington Department of Ecology	C584
Wisconsin Department of Natural Resources	998036160

Current certificates and lists of licensed parameters are located in the Quality Assurance office and are available upon request

NELAP Accredited Test Methods

MATRIX: Air	
Description of Test	**Method**
Determination of Polychlorinated p-Dioxins & Polychlorinated Dibenzofurans	EPA 23

MATRIX: Biological Tissue	
Description of Test	**Method**
Tetra- through Octa-Chlorinated Dioxins and Furans by Isotope Dilution GC/HRMS	EPA 1613B
Brominated Diphenyl Ethers by HRGC/HRMS	EPA 1614A
Chlorinated Biphenyl Congeners in Water, Soil, Sediment, and Tissue by GC/HRMS	EPA 1668A/C
Pesticides in Water, Soil, Sediment, Biosolids, and Tissue by HRGC/HRMS	EPA 1699
Perfluorinated Alkyl Acids in Drinking Water by SPE and LC/MS/MS	EPA 537
Polychlorinated Dibenzo-p-Dioxins and Polychlorinated Dibenzofurans by GC/HRMS	EPA 8280A/B
Polychlorinated Dibenzodioxins (PCDDs) and Polychlorinated Dibenzofurans (PCDFs) by GC/HRMS	EPA 8290/8290A

MATRIX: Drinking Water	
Description of Test	**Method**
2,3,7,8-Tetrachlorodibenzo- p-dioxin (2,3,7,8-TCDD) GC/HRMS	EPA 1613
Perfluorinated Alkyl Acids in Drinking Water by SPE and LC/MS/MS	EPA 537

MATRIX: Non-Potable Water	
Description of Test	**Method**
Tetra- through Octa-Chlorinated Dioxins and Furans by Isotope Dilution GC/HRMS	EPA 1613B
Brominated Diphenyl Ethers by HRGC/HRMS	EPA 1614A
Chlorinated Biphenyl Congeners in Water, Soil, Sediment, and Tissue by GC/HRMS	EPA 1668A/C
Pesticides in Water, Soil, Sediment, Biosolids, and Tissue by HRGC/HRMS	EPA 1699
Perfluorinated Alkyl Acids in Drinking Water by SPE and LC/MS/MS	EPA 537
Dioxin by GC/HRMS	EPA 613
Polychlorinated Dibenzo-p-Dioxins and Polychlorinated Dibenzofurans by GC/HRMS	EPA 8280A/B
Polychlorinated Dibenzodioxins (PCDDs) and Polychlorinated Dibenzofurans (PCDFs) by GC/HRMS	EPA 8290/8290A

MATRIX: Solids	
Description of Test	**Method**
Tetra-Octa Chlorinated Dioxins and Furans by Isotope Dilution GC/HRMS	EPA 1613
Tetra- through Octa-Chlorinated Dioxins and Furans by Isotope	EPA 1613B

Dilution GC/HRMS	
Brominated Diphenyl Ethers by HRGC/HRMS	EPA 1614A
Chlorinated Biphenyl Congeners in Water, Soil, Sediment, and Tissue by GC/HRMS	EPA 1668A/C
Perfluorinated Alkyl Acids in Drinking Water by SPE and LC/MS/MS	EPA 537
Polychlorinated Dibenzo-p-Dioxins and Polychlorinated Dibenzofurans by GC/HRMS	EPA 8280A/B
Polychlorinated Dibenzodioxins (PCDDs) and Polychlorinated Dibenzofurans (PCDFs) by GC/HRMS	EPA 8290/8290A

SUB UPS: Vista Labs (CA)

1601099 1.6°C

CHAIN OF CUSTODY

PAGE OF

ALPHA ANALYTICAL

Westborough, MA TEL: 508-898-9220 FAX: 508-898-9193

Mansfield, MA TEL: 508-822-9300 FAX: 508-822-3288

Date Rec'd in Lab: 9/1/16

ALPHA Job #: L1627010

Client Information

Client: Alpha Analytical Lab

Address: 8 Walkup Drive

Westborough, Ma 01581

Phone: 508-898-9220

Fax:

Email: subreports@alphalab.com

☐ These samples have been Previously analyzed by Alpha

Project Information

Project Name:

Project Location: NH

Project #:

Project Manager: Karyn Raymond

ALPHA Quote #: 380

Turn-Around Time

☒ Standard ☐ Rush (ONLY IF PRE-APPROVED)

14 Day TAT

Due Date: Time:

Report Information Data Deliverables

☐ FAX ☐ EMAIL

☐ ADEx ☐ Add'l Deliverables

Billing Information

☐ Same as Client info PO #:

Regulatory Requirements/Report Limits

State/Fed Program Criteria

MCP PRESUMPTIVE CERTAINTY-CT REASONABLE CONFIDENCE PROTOCOLS

☐ Yes ☐ No Are MCP Analytical Methods Required?

☐ Yes ☐ No Are CT RCP (Reasonable Confidence Protocols) Required?

Other Project Specific Requirements/Comments/Detection Limits:

Please reference Alpha Job #L1627010 on this report.

537-PFOA and PFOS only

SAMPLE HANDLING

Filtration

☐ Done

☐ Not Needed

☐ Lab to do

Preservation

☐ Lab to do

(Please specify below)

ALPHA Lab ID (Lab Use Only)	Sample ID	Collection Date	Collection Time	Sample Matrix	Sampler's Initials	537												Sample Specific Comments	TOTAL # BOTTLES
	1607530-B103(S1-S2)	8/26/16	09:25	Soil		X													1
	1607530-B103(S3-S4)	8/26/16	09:55	Soil		X													1
	1607530-B102(S1-S2)	8/26/16	10:45	Soil		X													1
	1607530-B102(S3-S4)	8/26/16	11:00	Soil		X													1
	1607530-B101(S1-S2)	8/26/16	11:45	Soil		X													1
	1607530-B101(S3-S4)	8/26/16	12:00	Soil		X													1

Container Type	P		-	-	-	-	-	-	-	-	-	-
Preservative	A		-	-	-	-	-	-	-	-	-	-

PLEASE ANSWER QUESTIONS ABOVE!

S YOUR PROJECT MA MCP or CT RCP?

Relinquished By:	Date/Time	Received By:	Date/Time
AAC	8/30/16		09/01/16 0935

Please print clearly, legibly and completely. Samples can not be logged in and turnaround time clock will not start until any ambiguities are resolved. All samples submitted are subject to Alpha's Payment Terms.

FORM NO: 01-01(I) rev. 30-JUL-07)

Vista Analytical Laboratory

SAMPLE LOG-IN CHECKLIST

Vista Project #: 1601099 **TAT** Std

Samples Arrival:	**Date/Time** 08/31/16 0933	**Initials:** BLB	**Location:** WR-2 **Shelf/Rack:** NA
Logged In:	**Date/Time** 09/01/16 1235	**Initials:** BLB	**Location:** WR-2 **Shelf/Rack:** A5

Delivered By:	FedEx	UPS	On Trac	DHL	Hand Delivered	Other
Preservation:	Ice	Blue Ice	Dry Ice	None		

Temp °C: 1.9	(uncorrected)	**Time:**	**Thermometer ID:** IR-1
Temp °C: 1.6	(corrected)	**Probe used:** Yes☐ No☐	

		YES	NO	NA
Adequate Sample Volume Received?				
Holding Time Acceptable?				
Shipping Container(s) Intact?		✓		
Shipping Custody Seals Intact?				✓
Shipping Documentation Present?		✓		
Airbill	Trk # 1Z E3065401938429 82	✓		
Sample Container Intact?				
Sample Custody Seals Intact?				
Chain of Custody / Sample Documentation Present?		✓		
COC Anomaly/Sample Acceptance Form completed?				

If Chlorinated or Drinking Water Samples, Acceptable Preservation?					
$Na_2S_2O_3$ Preservation Documented?		COC	Sample Container	None	
Shipping Container	Vista	Client	Retain	Return	Dispose

Comments:

BLA 08/23/2016

September 15, 2016

Vista Work Order No. 1601114

Ms. Karyn Raymond
Alpha Analytical Laboratory
8 Walkup Drive
Westborough, MA 01581

Dear Ms. Raymond,

Enclosed are the results for the sample set received at Vista Analytical Laboratory on September 03, 2016. This sample set was analyzed on a rush turn-around time. The SDG Number is L1627653.

Vista Analytical Laboratory is committed to serving you effectively. If you require additional information, please contact me at 916-673-1520 or by email at mmaier@vista-analytical.com.

Thank you for choosing Vista as part of your analytical support team.

Sincerely,

Martha Maier
Laboratory Director

Vista Analytical Laboratory certifies that the report herein meets all the requirements set forth by NELAP for those applicable test methods. Results relate only to the samples as received by the laboratory. This report should not be reproduced except in full without the written approval of Vista.

Vista Analytical Laboratory 1104 Windfeld Way El Dorado Hills, CA 95762 ph: 916-673-1520 fx: 916-673-0106 www.vista-analytical.com

SDG Number L1627653
Vista Work Order No. 1601114
Case Narrative

Sample Condition on Receipt:

Three water samples were received in good condition and within the method temperature requirements. The samples were received and stored securely in accordance with Vista standard operating procedures and EPA methodology.

Analytical Notes:

Modified EPA Method 537

The samples were extracted and analyzed for PFOA and PFOS using Modified EPA Method 537. The results include both linear and branched isomers.

Holding Times

The samples were extracted and analyzed within the method hold times.

Quality Control

The Initial Calibration and Continuing Calibration Verifications met the acceptance criteria.

A Method Blank and Ongoing Precision and Recovery (OPR) sample were extracted and analyzed with the preparation batch. No analytes were detected in the Method Blank above the Reporting Limit. The OPR recoveries were within the method acceptance criteria.

The recoveries of all internal standards in the QC and field samples were within the acceptance criteria.

TABLE OF CONTENTS

Case Narrative..... 1

Table of Contents..... 3

Sample Inventory..... 4

Analytical Results..... 5

Qualifiers..... 11

Certifications..... 12

Sample Receipt..... 15

Sample Inventory Report

Vista Sample ID	Client Sample ID	Sampled	Received	Components/Containers
1601114-01	1607530-B101 (MW)	01-Sep-16 10:00	03-Sep-16 09:45	HDPE Bottle, 125 mL
				HDPE Bottle, 125 mL
1601114-02	1607530-B102 (MW)	01-Sep-16 10:10	03-Sep-16 09:45	HDPE Bottle, 125 mL
				HDPE Bottle, 125 mL
1601114-03	1607530-SW1	01-Sep-16 10:35	03-Sep-16 09:45	HDPE Bottle, 125 mL
				HDPE Bottle, 125 mL

ANALYTICAL RESULTS

Sample ID: Method Blank — Modified EPA Method 537

Matrix: Aqueous	QC Batch: B6I0058	Lab Sample: B6I0058-BLK1
Sample Size: 0.125 L	Date Extracted: 13-Sep-2016 7:28	Date Analyzed: 13-Sep-16 17:52 Column: BEH C18 Analyst: AC

Analyte	Conc. (ng/L)	RL	Qualifiers
PFOA	ND	8.00	
PFOS	ND	8.00	

	Labeled Standard	%R	LCL-UCL	Qualifiers
IS	13C2-PFOA	92.7	60 - 150	
IS	13C8-PFOS	88.3	60 - 150	

RL - Reporting limit

LCL-UCL - Lower control limit - upper control limit
Results reported to RL.
When reported, PFBS, PFHxS, PFOA and PFOS include both linear and branched isomers. Only the linear isomer is reported for all other analytes.

Sample ID: OPR

Modified EPA Method 537

Matrix:	Aqueous	QC Batch:	B6I0058	Lab Sample:	B6I0058-BS1
Sample Size:	0.125 L	Date Extracted:	13-Sep-2016 7:28	Date Analyzed:	13-Sep-16 17:14 Column: BEH C18 Analyst: AC

Analyte	Amt Found (ng/L)	Spike Amt	%R	Limits		Labeled Standard	%R	LCL-UCL
PFOA	73.9	80.0	92.4	70 - 130	IS	13C2-PFOA	104	60 - 150
PFOS	79.1	80.0	98.9	70 - 130	IS	13C8-PFOS	90.7	60 - 150

LCL-UCL - Lower control limit - upper control limit

Sample ID: 1607530-B101 (MW) — Modified EPA Method 537

Client Data		Sample Data		Laboratory Data			
Name:	Alpha Analytical Laboratory	Matrix:	Water	Lab Sample:	1601114-01	Date Received:	03-Sep-2016 9:45
Project:		Sample Size:	0.127 L	QC Batch:	B6I0058	Date Extracted:	13-Sep-2016 7:28
Date Collected:	01-Sep-2016 10:00			Date Analyzed:	13-Sep-16 18:18	Column: BEH C18	Analyst: AC

Analyte	Conc. (ng/L)	RL	Qualifiers
PFOA	ND	7.86	
PFOS	ND	7.86	

	Labeled Standard	%R	LCL-UCL	Qualifiers
IS	13C2-PFOA	117	60 - 150	
IS	13C8-PFOS	68.2	60 - 150	

RL - Reporting limit

LCL-UCL - Lower control limit - upper control limit
Results reported to RL.
When reported, PFBS, PFHxS, PFOA and PFOS include both linear and branched isomers.
Only the linear isomer is reported for all other analytes.

Sample ID: 1607530-B102 (MW) — Modified EPA Method 537

Client Data		Sample Data		Laboratory Data			
Name:	Alpha Analytical Laboratory	Matrix:	Water	Lab Sample:	1601114-02	Date Received:	03-Sep-2016 9:45
Project:		Sample Size:	0.125 L	QC Batch:	B6I0058	Date Extracted:	13-Sep-2016 7:28
Date Collected:	01-Sep-2016 10:10			Date Analyzed:	13-Sep-16 18:30 Column: BEH C18 Analyst: AC		

Analyte	Conc. (ng/L)	RL	Qualifiers
PFOA	11.2	8.01	
PFOS	16.1	8.01	

	Labeled Standard	%R	LCL-UCL	Qualifiers
IS	13C2-PFOA	101	60 - 150	
IS	13C8-PFOS	88.9	60 - 150	

RL - Reporting limit

LCL-UCL - Lower control limit - upper control limit
Results reported to RL.
When reported, PFBS, PFHxS, PFOA and PFOS include both linear and branched isomers.
Only the linear isomer is reported for all other analytes.

Sample ID: 1607530-SW1 — Modified EPA Method 537

Client Data		Sample Data		Laboratory Data			
Name:	Alpha Analytical Laboratory	Matrix:	Water	Lab Sample:	1601114-03	Date Received:	03-Sep-2016 9:45
Project:		Sample Size:	0.123 L	QC Batch:	B6I0058	Date Extracted:	13-Sep-2016 7:28
Date Collected:	01-Sep-2016 10:35			Date Analyzed:	13-Sep-16 18:43 Column: BEH C18 Analyst: AC		
					14-Sep-16 10:33 Column: BEH C18 Analyst: AC		

Analyte	Conc. (ng/L)	RL	Qualifiers		Labeled Standard	%R	LCL-UCL	Qualifiers
PFOA	842	8.12		IS	13C2-PFOA	101	60 - 150	
PFOS	2910	40.6	D	IS	13C8-PFOS	95.4	60 - 150	D

RL - Reporting limit

LCL-UCL - Lower control limit - upper control limit
Results reported to RL.
When reported, PFBS, PFHxS, PFOA and PFOS include both linear and branched isomers.
Only the linear isomer is reported for all other analytes.

DATA QUALIFIERS & ABBREVIATIONS

B	**This compound was also detected in the method blank.**
D	**Dilution**
E	**The associated compound concentration exceeded the calibration range of the instrument.**
H	**Recovery and/or RPD was outside laboratory acceptance limits.**
I	**Chemical Interference**
J	**The amount detected is below the Reporting Limit/LOQ.**
*****	**See Cover Letter**
Conc.	**Concentration**
NA	**Not applicable**
ND	**Not Detected**
TEQ	**Toxic Equivalency**

Unless otherwise noted, solid sample results are reported in dry weight. Tissue samples are reported in wet weight.

CERTIFICATIONS

Accrediting Authority	Certificate Number
California Department of Health – ELAP	2892
DoD ELAP - A2LA Accredited - ISO/IEC 17025:2005	3091.01
Florida Department of Health	E87777
Hawaii Department of Health	N/A
Louisiana Department of Environmental Quality	01977
Maine Department of Health	2014022
Nevada Division of Environmental Protection	CA004132015-1
New Jersey Department of Environmental Protection	CA003
New York Department of Health	11411
Oregon Laboratory Accreditation Program	4042-004
Pennsylvania Department of Environmental Protection	012
South Carolina Department of Health	87002001
Texas Commission on Environmental Quality	T104704189-15-6
Virginia Department of General Services	7923
Washington Department of Ecology	C584
Wisconsin Department of Natural Resources	998036160

Current certificates and lists of licensed parameters are located in the Quality Assurance office and are available upon request

NELAP Accredited Test Methods

MATRIX: Air	
Description of Test	**Method**
Determination of Polychlorinated p-Dioxins & Polychlorinated Dibenzofurans	EPA 23

MATRIX: Biological Tissue	
Description of Test	**Method**
Tetra- through Octa-Chlorinated Dioxins and Furans by Isotope Dilution GC/HRMS	EPA 1613B
Brominated Diphenyl Ethers by HRGC/HRMS	EPA 1614A
Chlorinated Biphenyl Congeners in Water, Soil, Sediment, and Tissue by GC/HRMS	EPA 1668A/C
Pesticides in Water, Soil, Sediment, Biosolids, and Tissue by HRGC/HRMS	EPA 1699
Perfluorinated Alkyl Acids in Drinking Water by SPE and LC/MS/MS	EPA 537
Polychlorinated Dibenzo-p-Dioxins and Polychlorinated Dibenzofurans by GC/HRMS	EPA 8280A/B
Polychlorinated Dibenzodioxins (PCDDs) and Polychlorinated Dibenzofurans (PCDFs) by GC/HRMS	EPA 8290/8290A

MATRIX: Drinking Water	
Description of Test	**Method**
2,3,7,8-Tetrachlorodibenzo- p-dioxin (2,3,7,8-TCDD) GC/HRMS	EPA 1613
Perfluorinated Alkyl Acids in Drinking Water by SPE and LC/MS/MS	EPA 537

MATRIX: Non-Potable Water	
Description of Test	**Method**
Tetra- through Octa-Chlorinated Dioxins and Furans by Isotope Dilution GC/HRMS	EPA 1613B
Brominated Diphenyl Ethers by HRGC/HRMS	EPA 1614A
Chlorinated Biphenyl Congeners in Water, Soil, Sediment, and Tissue by GC/HRMS	EPA 1668A/C
Pesticides in Water, Soil, Sediment, Biosolids, and Tissue by HRGC/HRMS	EPA 1699
Perfluorinated Alkyl Acids in Drinking Water by SPE and LC/MS/MS	EPA 537
Dioxin by GC/HRMS	EPA 613
Polychlorinated Dibenzo-p-Dioxins and Polychlorinated Dibenzofurans by GC/HRMS	EPA 8280A/B
Polychlorinated Dibenzodioxins (PCDDs) and Polychlorinated Dibenzofurans (PCDFs) by GC/HRMS	EPA 8290/8290A

MATRIX: Solids	
Description of Test	**Method**
Tetra-Octa Chlorinated Dioxins and Furans by Isotope Dilution GC/HRMS	EPA 1613
Tetra- through Octa-Chlorinated Dioxins and Furans by Isotope	EPA 1613B

Dilution GC/HRMS	
Brominated Diphenyl Ethers by HRGC/HRMS	EPA 1614A
Chlorinated Biphenyl Congeners in Water, Soil, Sediment, and Tissue by GC/HRMS	EPA 1668A/C
Perfluorinated Alkyl Acids in Drinking Water by SPE and LC/MS/MS	EPA 537
Polychlorinated Dibenzo-p-Dioxins and Polychlorinated Dibenzofurans by GC/HRMS	EPA 8280A/B
Polychlorinated Dibenzodioxins (PCDDs) and Polychlorinated Dibenzofurans (PCDFs) by GC/HRMS	EPA 8290/8290A

SUB UPS: VISTA-CA

1601114 0.5°C

CHAIN OF CUSTODY

PAGE 1 OF 1

ALPHA ANALYTICAL

Westborough, MA TEL: 508-898-9220 FAX: 508-898-9193

Mansfield, MA TEL: 508-822-9300 FAX: 508-822-3288

Date Rec'd in Lab:

ALPHA Job #: L1627653

Client Information

Client: Alpha Analytical Lab

Address: 8 Walkup Drive

Westborough, Ma 01581

Phone: 508-898-9220

Fax:

Email: subreports@alphalab.com

☐ These samples have been Previously analyzed by Alpha

Project Information

Project Name:

Project Location: MA

Project #:

Project Manager: Karyn Raymond

ALPHA Quote #:

Turn-Around Time

☒ Standard ☐ Rush (ONLY IF PRE-APPROVED)

14 Day

Due Date: Time:

Report Information Data Deliverables

☐ FAX ☐ EMAIL

☐ ADEx ☐ Add'l Deliverables

Billing Information

☐ Same as Client info PO #:

Regulatory Requirements/Report Limits

State/Fed Program Criteria

MCP PRESUMPTIVE CERTAINTY-CT REASONABLE CONFIDENCE PROTOCOLS

☐ Yes ☐ No Are MCP Analytical Methods Required?

☐ Yes ☐ No Are CT RCP (Reasonable Confidence Protocols) Required?

Other Project Specific Requirements/Comments/Detection Limits:

Please reference Alpha Job #L1627653 on this report.

ANALYSIS

SAMPLE HANDLING

Filtration

☐ Done

☐ Not Needed

☐ Lab to do

Preservation

☐ Lab to do

(Please specify below)

ALPHA Lab ID (Lab Use Only)	Sample ID	Collection Date	Collection Time	Sample Matrix	Sampler's Initials	537-PFOA/PFOS Only	Sample Specific Comments	TOTAL # BOTTLES
	1607530-B101 (MW)	9/1/16	10:00	WATER		X		2
	1607530-B102 (MW)	9/1/16	10:10	WATER		X		2
	1607530-SW1	9/1/16	10:35	WATER		X		2

Container Type	Pla		-	-	-	-	-	-	-	-	-	-
Preservative	NA		-	-	-	-	-	-	-	-	-	-

PLEASE ANSWER QUESTIONS ABOVE!

IS YOUR PROJECT MA MCP or CT RCP?

FORM NO. 01-01(I) (rev. 30-JUL-07)

Relinquished By:	Date/Time	Received By:	Date/Time
[signature]	9/2/16	[signature]	09/06 09:45

Please print clearly, legibly and completely. Samples can not be logged in and turnaround time clock will not start until any ambiguities are resolved. All samples submitted are subject to Alpha's Payment Terms.

SAMPLE LOG-IN CHECKLIST

Vista Analytical Laboratory

Vista Project #: 1601114 **TAT** 14

Samples Arrival:	**Date/Time** 9/3/16 09:45	**Initials:** WL	**Location:** WR2 **Shelf/Rack:** NA
Logged In:	**Date/Time** 09/06/16 1325	**Initials:** BAB	**Location:** WR-2 **Shelf/Rack:** F 6

Delivered By:	FedEx	UPS	On Trac	DHL	Hand Delivered	Other
Preservation:	Ice	Blue Ice	Dry Ice	None		

Temp °C: 0.0 (uncorrected)	**Time:** 09:50	**Thermometer ID:** IR-1
Temp °C: 0.5 (corrected)	**Probe used:** Yes☐ No☑	

	YES	NO	NA
Adequate Sample Volume Received?	✓		
Holding Time Acceptable?	✓		
Shipping Container(s) Intact?	✓		
Shipping Custody Seals Intact?			✓
Shipping Documentation Present?	✓		
Airbill Trk # 1ZE3065444947158 7	✓		
Sample Container Intact?	✓		
Sample Custody Seals Intact?			✓
Chain of Custody / Sample Documentation Present?	✓		
COC Anomaly/Sample Acceptance Form completed?		✓	
If Chlorinated or Drinking Water Samples, Acceptable Preservation?			✓

$Na_2S_2O_3$ Preservation Documented?		COC	Sample Container	None	
Shipping Container	Vista	Client	Retain	Return	Dispose

Comments:

BLA 08/23/2016

Chain-of-Custody Record

Laboratory: Alpha

Laboratory Job # (Lab use only) 21627653

GEI Consultants
400 Unicorn Park Drive
Woburn, MA 01801
PH: 781.721.4000
FX: 781.721.4073

Project Information

Project Name: Eversource NH SRP

Project Location: Newington, NH

Project Number: 1607530

Project Manager: Mike Sabulis
(office: 781-721-4114) (cell: 508-633-9544)

Send Report to: Jess Englehart

Send EDD to: labdata@geiconsultants.com

MCP PRESUMPTIVE CERTAINTY REQUIRED – **YES** NO

If Yes, Are MCP Analytical Methods Required? **YES** NO NA

If Yes, Are Drinking Water Samples Submitted? YES **NO** NA

If Yes, Have You Met Minimum Field QC Requirements? **YES** NO **NA**

Preservative

Analysis

Sample Handling

Samples Field Filtered: YES NO **NA**

Sampled Shipped With Ice: **YES** NO

Lab Sample Number	GEI Sample ID	Collection Date	Collection Time	Matrix	No. of Bottles	Sampler(s) Initials	PFOS	PFOA	Sample Specific Remarks
27653-01	1607530-B101(MW)	9/1/2016	10:00	water	2	CRC	x	x	
02	1607530-B102(MW)	9/1/2016	10:10	water	2	MEG	x	x	
03	1607530-SW1	9/1/2016	10:35	water	2	CRC	x	x	

MCP Level Needed: GEI requires the most stringent Method 1 MCP standard be met for all analytes whenever possible.

Relinquished by: (signature)	Date:	Time:	Received by: (signature)
1. Molly E Green	9/1/16	12:53	1. GEI Sample Fridge
2. GEI Fridge	9/2/16	9:56	2. [illegible]
3. [illegible]	9/2/16	9:57	3. [illegible] ARL 9-2-16 9:56
4. [illegible] ARL	9-2-16	13:40	4. [illegible] McCree

Turnaround Time (Business days):

Normal _X_ Other ____
10-Day ____ 7-Day ____
5-Day ____ 3-Day ____

Before submitting rush turnaround samples, you **must** notify the laboratory to confirm that the TAT can be achieved.

Additional Requirements/Comments/Remarks:

Attachment D – Treatment System Information

89 Crawford Street
Leominster, Massachusetts 01453
Tel: 774.450.7177
Fax: 888.835.0617
www.lrt-llc.net

Description of Water Treatment System

Primary contaminants of concern at the site include total suspended solids (TSS) and per-polyfluorinated alkyl substances (PFAS).

Water will be routed to a treatment system capable of treating water up to 25 gallons per minute (gpm). All influent water will enter one (1) 8,000-gallon weir tank. From the weir tank, water will be pumped via an electric submersible to one (1) dual bag filter skid with two (2) No. 2 bag filters in parallel such that one bag filter vessel can operate while the other remains on standby. During a bag filter changeout, one vessel is opened while the other remains closed so that water treatment does not need to be shut down. The bag filter skid includes isolation valves, sample ports and pressure gauges on the influent and effluent piping so that it is clear when a bag filter changeout is required. Maximum flow rate is 100 gpm and 75 PSI.

From the bag filters, water is discharged to two (2) vessels in series, each containing 1,000 pounds of reactivated liquid phase carbon. Each vessel is rated for a maximum flow rate of 100 gpm and 75 PSI and includes isolation valves, sample ports and pressure gauges on the influent and effluent piping so that it is clear when backwashing is required. Following the carbon vessels, water will flow through one (1) flow meter/totalizer prior to discharging to the designated location.

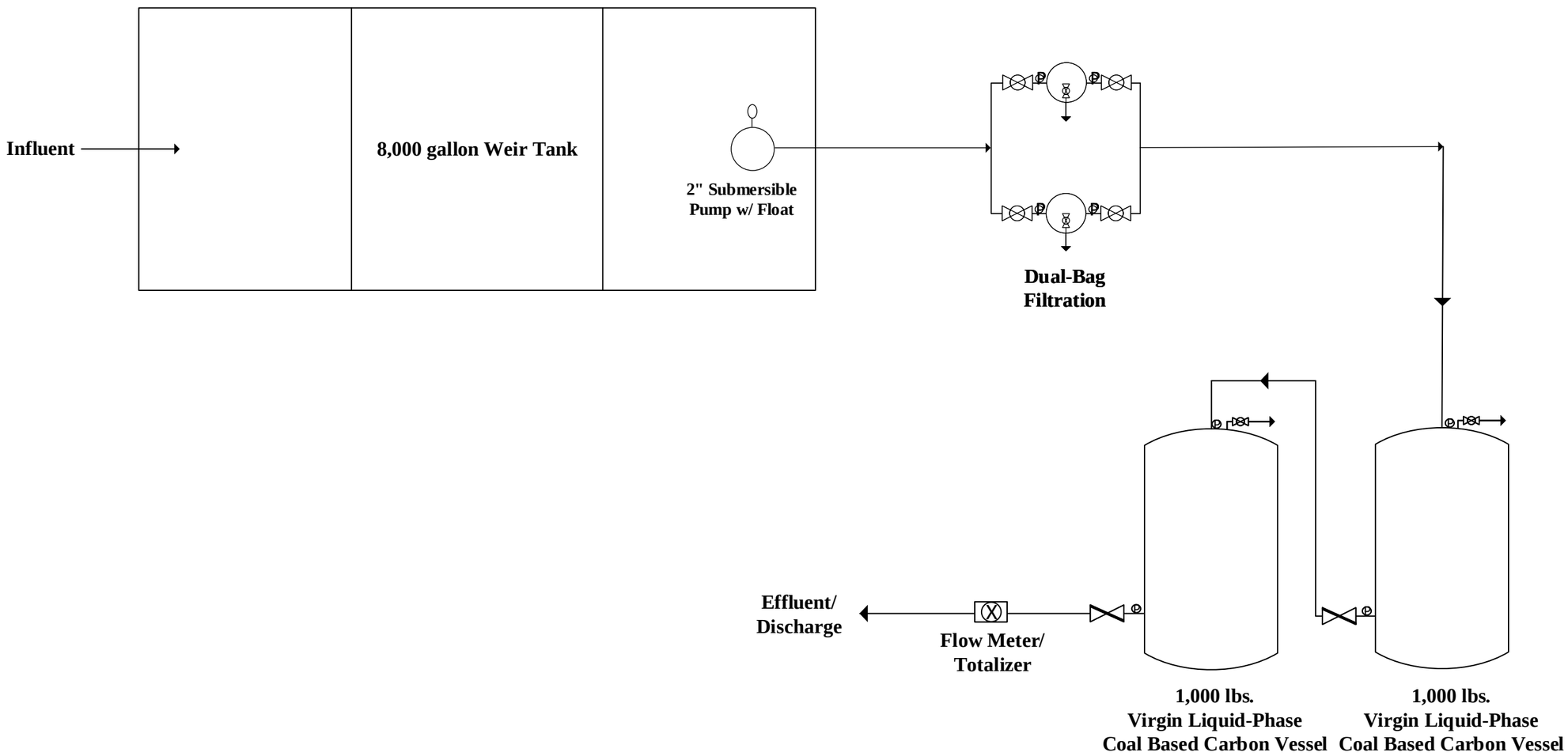

Notes:
1. Figure not drawn to scale
2. System rated for 25 GPM
3. Sampling ports on all treatment system components

Key:
Piping/Hose

LRT Lockwood Remediation Technologies LLC	**Lockwood Remediation Technologies, LLC** **89 Crawford Street** **Leominster, MA 01453** **Office: 774-450-7177**	**Figure 1 - Water Treatment System Schematic**	**Water Treatment System**	**PROJECT No.** 3434	**FIGURE No.** **1**
	DESIGNED BY: LRT DRAWN BY: DATE: 6/25/19 REVISION:		**85 Gosling Rd.** **Newington, New Hampshire**		

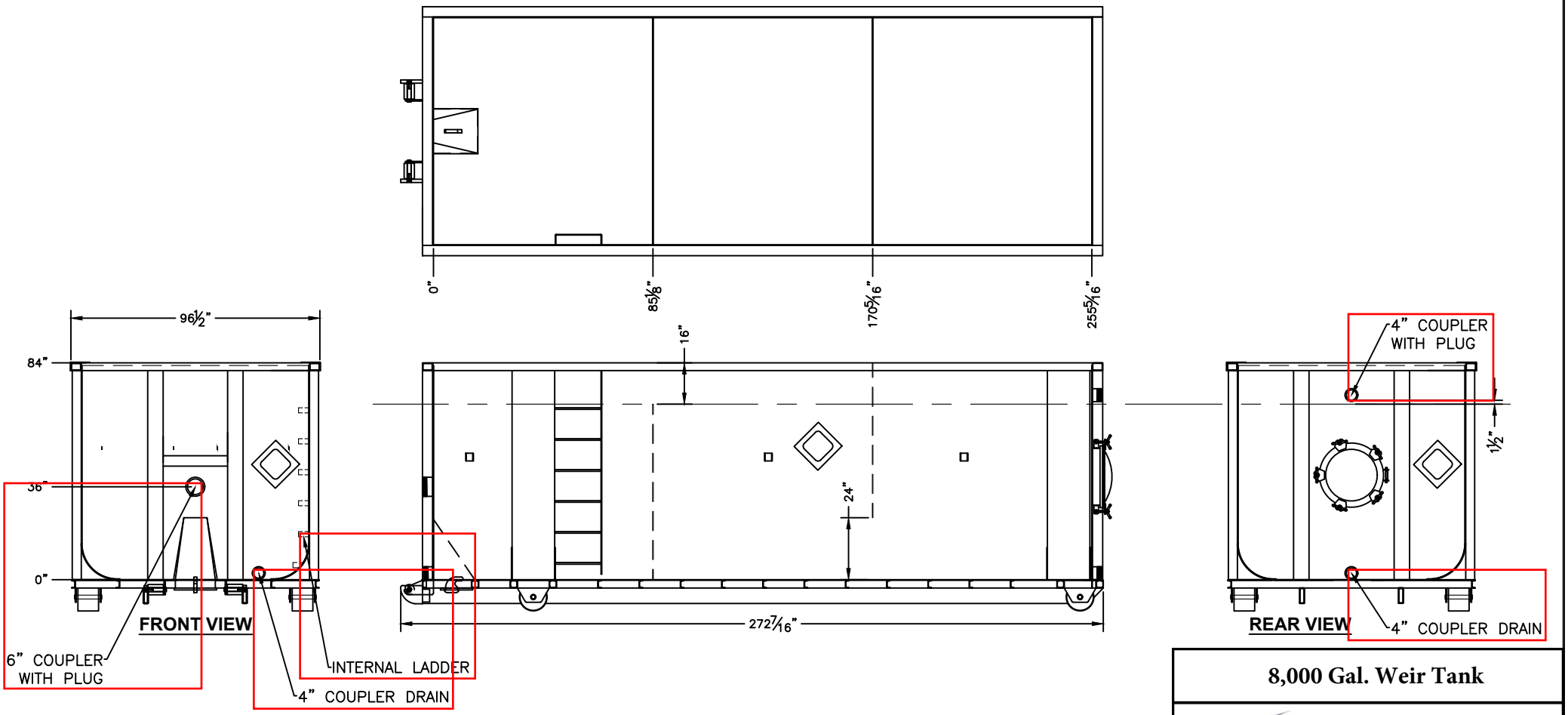

8,000 Gal. Weir Tank

Lockwood Remediation Technologies, LLC

89 Crawford Street
Leominster, Massachusetts 01453
O: 774-450-7177
F: 888-835-0617

LB Series

Top discharge provides maximum motor cooling while allowing continuous duty operation.

Available in single-phase or three-phase. Pumps fit into 8-inch pipes.

LB Series Features

LB(T)-1500:

High chrome semi-open impeller resists wear for adhesive particles.

Diode motor protectors prevent stator damage in high amperage or run-dry situations.

Up to 70' shut off head

Slimline design allows pumps to fit into 8" pipes.

LB Series Features

LB-800:

Designed to fit an 8" pipe.

Up to 60' shut off head.

Available in 110V and 220V single-phase with 50 foot cables.

Double Inside Mechanical Seal With SiC faces provides the longest operational life.

Oil Lifter provides lubrication of the seal faces.

OPTIONAL ACCESSORIES
Float Switch for automatic operation
TS-302 for 110V, TS-303 for 220V.

Performance Range

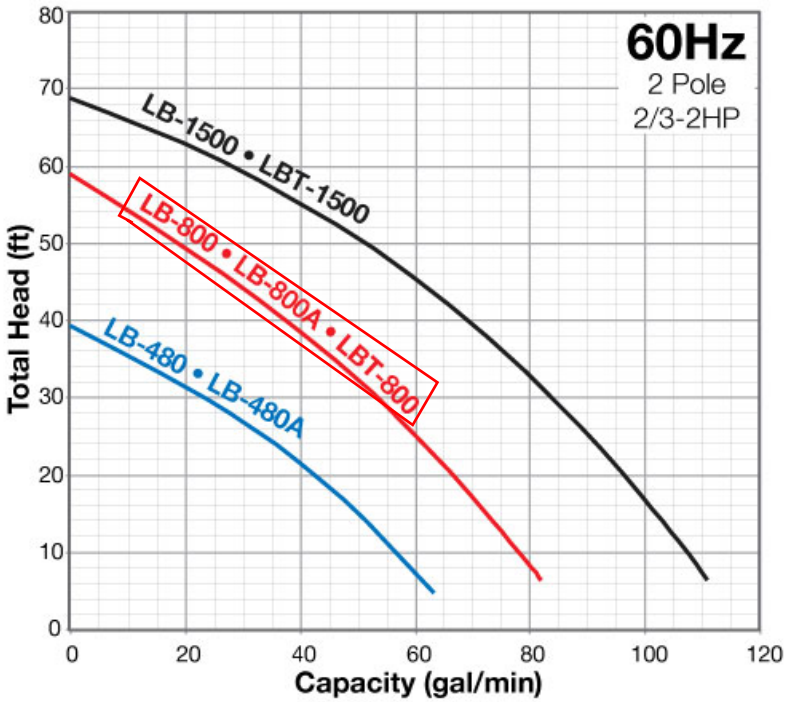

Model	Discharge Size (in.)	Motor Output (HP)	Voltage (V)	Cable Length (ft.)	Diameter (in.)	Height (in.)	Weight (lbs.)
LB-1500	3	2	110V or 220V	50	7 3/8	23 5/16	72
LB-480	2	2/3	110V	32	7 3/8	11 1/4	28
LB-480A	2	2/3	110V	32	8 3/4	11 1/4	30
LB-800	2	1	115V or 230V	50	7 3/8	13 7/16	35
LB-800A	2	1	115 or 230	50	8 3/4	23 5/16	38
LBT-1500	2 or 3	2	230 or 460 or 575V	50	7 3/8	23 5/16	85
LBT-800	2	1	230 or 460 or 575V	50	7 3/8	13 7/16	35

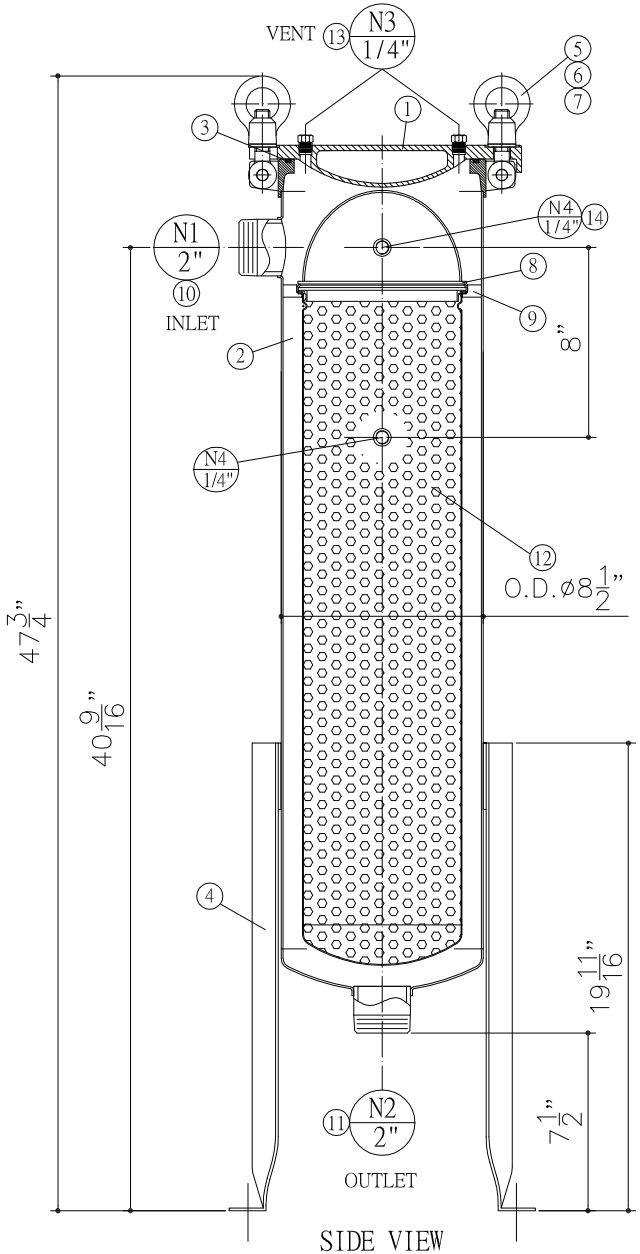

SIDE VIEW

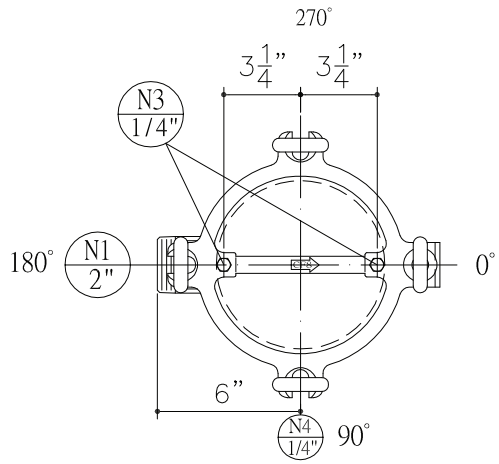

TOP VIEW

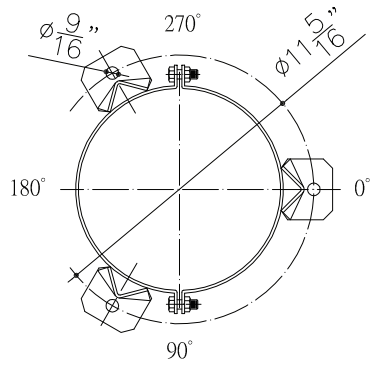

ANCHOR

BILL OF MATERIALS

(QUANTITY PER UNIT)

PROD ORDER_____S.O_____ MFG. SERIAL NO._____

CUSTOMER_____ DESIGN __150__ PSIG __93__°C

DESTINATION_____ MAX. A.W.P._____ PSIG _____°C

CUST. P.O._____ HYDROSTATIC TESTED _225_ PSIG

NO.	DESCRIPTION	QUAN.	MATERIAL	PART NO.
1	FILTER COVER	1	304 S/S	
2	FILTER SHELL	1	304 S/S	
3	GASKET	1	EPDM	11046000002
4	LEG	3	304 S/S	
5	EYENUT	4	SS41	11984900004
6	EYEBOLT PIN	4	304 S/S	11991900073
7	EYEBOLT	4	SS41	11984900003
8	DEPRESSOR	1	304 S/S	21041900002
9	COMPRESSION PLATE	1	304 S/S	
10	INLET 2" NPT	1	304 S/S	
11	OUTLET 2" NPT	1	304 S/S	
12	STEEL BASKET	1	304 S/S	
13	VENT 1/4" FNPT.	2	304 S/S	
14	GAGE 1/4" FNPT.	2	304 S/S	

LRT Lockwood Remediation Technologies LLC

89 Crawford Street, Leominster, MA 01453

TITLE:
ARRANGEMENT & ASSEMBLY DRAWING

FILE NAME:
ARRANGEMENT & ASSEMBLY FSB2A-S-2TN

DRAWN BY: M Deso

DATE: 12-20-2018

Polyester Liquid Filter Bag

Features

* Polyester liquid bag filter are available with a carbon steel ring, stainless steel ring or plastic flanges.
* Heavy-duty handle eases installation and removal
* Metal ring sewn into bag top for increased durability and positive sealing
* Wide array of media fibers to meet needed temperature and micron specifications

Applications

Polyester liquid filter bags can be used in the filtering of a wide array of industrial and commercial process fluids

Sizes

Our liquid filter bags are available for all common liquid bag housings. Dimensions range from 4.12" diameter X 8" length thru 9" diameter X 32" length.

Micron Ratings

Available fibers range from 1 to 1500 microns

Options

* Bag finish or covers for strict migration requirements.
* Plastic top O.E.M. replacements
* Multi-layered filtering capabilities for higher dirt holding capacities

Optional Filter Media

Felt: Nomex, Polyester, Polypropylene

Monofilament: Nylon, Polyester, Polypropylene

Multifilament: Nylon, Polyester

Polypropylene: Oil Removal

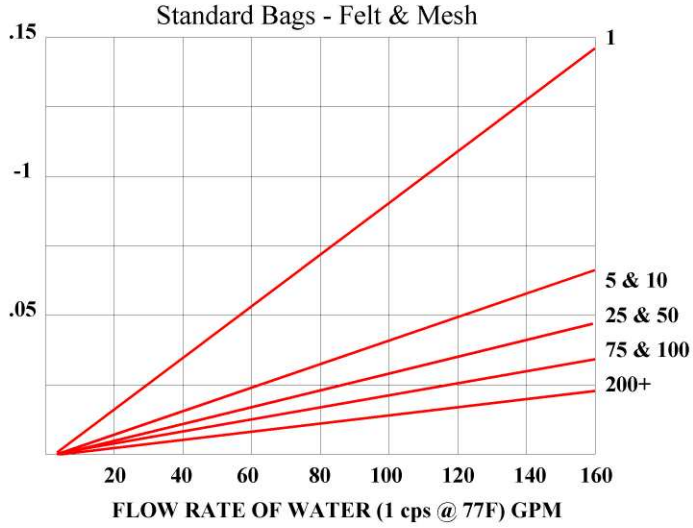

Recordall® Cold Water Top Load Bronze Disc Meter
Size 2" (DN 50mm)
NSF/ANSI Standard 61 Certified, Annex G

DESCRIPTION

Badger Meter offers the Recordall Disc meter in Cast Bronze and a Lead-Free Alloy. The Lead-Free Alloy (Trade designation: M170-LL) version has been certified to comply with NSF/ANSI Standard 61, Annex G and carries the NSF-61 Mark on the housing. All components of the Lead-Free Alloy meter, i.e., disc, chamber, housing, seals, etc. comprise the certified system.

APPLICATIONS: For use in measurement of potable cold water in residential, commercial and industrial services where flow is in one direction only.

OPERATION: Water flows through the meter's strainer and into the measuring chamber where it causes the disc to nutate. The disc, which moves freely, nutates on its own ball, guided by a thrust roller. A drive magnet transmits the motion of the disc to a follower magnet located within the permanently-sealed register. The follower magnet is connected to the register gear train. The gear train reduces the disc nutations into volume totalization units displayed on the register dial face.

OPERATING PERFORMANCE: The Badger Meter Recordall Disc meters meet or exceed registration accuracy for the low flow rates (95%), normal operating flow rates (100 ± 1.5%), and maximum continuous operation flow rates as specifically stated by AWWA Standard C700.

CONSTRUCTION: Badger Meter Recordall Disc meter construction, which complies with ANSI/AWWA standard C700, consists of three basic components: bronze meter housing, measuring chamber, and permanently, sealed register. A corrosion-resistant engineered polymer material is used for the measuring chamber.

To simplify maintenance, the register, measuring chamber, and strainer can be replaced without removing the meter housing from the installation. No change gears are required for accuracy calibration. Interchangeability of parts among like-sized meters also minimizes spare parts inventory investment. The built-in strainer has an effective straining area of twice the inlet size.

MAGNETIC DRIVE: Direct magnetic drive, through the use of high-strength magnets, provides positive, reliable and dependable register coupling for straight-reading, remote or automatic meter reading options.

SEALED REGISTER: The standard register consists of a straight-reading, odometer-type totalization display, 360° test circle with center sweep hand and flow finder to detect leaks. Register gearing consists of self-lubricating engineered polymer gears to minimize friction and provides long life. Permanently sealed; dirt, moisture, tampering and lens fogging problems are eliminated. Multi-position register simplifies meter installation and reading. Automatic meter reading systems are available for all Recordall Disc meters. All reading options are removable from the meter without disrupting water service.

TAMPER-PROOF FEATURES: Customer removal of the register to obtain free water can be prevented when the optional tamper detection seal wire screw/or Torx® tamper seal resistant screw is added to the meter. Both can be installed at the meter site or at the factory.

MAINTENANCE: Badger Meter Recordall Disc meters are designed and manufactured to provide long-term service with minimal maintenance. When maintenance is required, it can be performed easily either at the meter installation or at any other convenient location. As an alternative to repair by the utility, Badger Meter offers various maintenance and meter component exchange programs to fit the needs of the utility.

CONNECTIONS: Tailpieces/Flanges for installations of meters on various pipe types and sizes, including misaligned pipes, are available as an option.

Model 170 shown with optional 1" Test Plug

SPECIFICATIONS

Typical Operating Range (100% ± 1.5%)	2 1/2 -170 GPM (.57 to 39 m^3/hr)
Low Flow (Min. 95%)	1 1/2 GPM (.34 m^3/hr)
Maximum Continuous Operation	100 GPM (23 m^3/hr)
Pressure Loss at Maximum Continuous Operation	3.3 PSI at 100 GPM (.23 bar at 23 m^3/hr)
Maximum Operating Temperature	80°F (26°C)
Maximum Operating Pressure	150 PSI (10 bar)
Measuring Element	Nutating disc, positive displacement
Register Type	Straight reading, permanently sealed magnetic drive standard. Remote reading or Automatic Meter Reading units optional.
Registration	100 Gallons, 10 Cubic Feet, 1 m^3
Register Capacity	100,000,000 Gallons, 10,000,000 Cubic Feet, 1,000,000 m^3. 6 odometer wheels.
Meter Connections	2" AWWA two bolt elliptical flange, drilled, or 2" - 11 1/2 NPT internal pipe threads.
Optional Test Plug	1" NPT test plug (TP) available on elliptical long and short versions.

MATERIALS

Meter Housing	Cast Bronze, Lead-Free Alloy
Housing Top Plates	Bronze, Lead-Free Alloy
Measuring Chamber	Engineered Polymer
Disc	Engineered Polymer
Trim	Stainless Steel/Bronze
Strainer	Engineered Polymer
Disc Spindle	Stainless Steel
Magnet	Ceramic
Magnet Spindle	Stainless Steel
Register Lid and Box	Engineered Polymer or Bronze
Generator Housing	Engineered Polymer

PRESSURE LOSS CHART

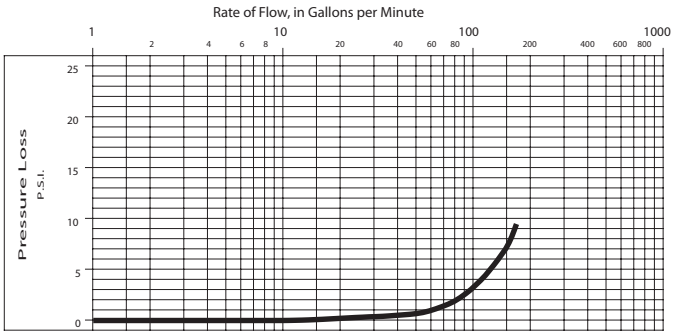

ACCURACY CHART

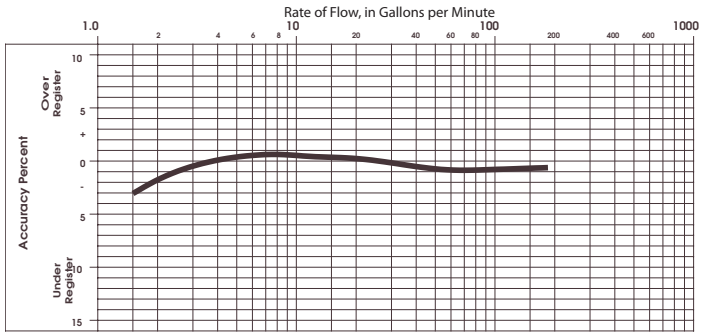

METER SIZE	METER MODEL	A LAYING LENGTH	B HEIGHT REG./RTR	C HEIGHT GEN.	D CENTERLINE BASE	WIDTH	APPROX. SHIPPING WEIGHT
2" (50mm)	170 EL, Hex. 170 EL, TP	$15^1/_4$" (387mm)	8" (203mm)	$9^3/_8$" (238mm)	$2^7/_8$" (73mm)	$9^1/_2$" (241mm)	30 lb. (13.6kg)
2" (50mm)	170 ELL, 170 ELL, TP	17" (432mm)	8" (203mm)	$9^3/_8$" (238mm)	$2^7/_8$" (73mm)	$9^1/_2$" (241mm)	30 lb. (13.6kg)

EL = Elliptical ELL = Elliptical Long Hex = Hexagon, 2" - $11^1/_2$ NPT Thread TP=Test Plug 1"

Sweep Hand Registration
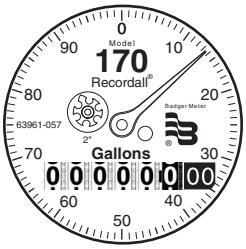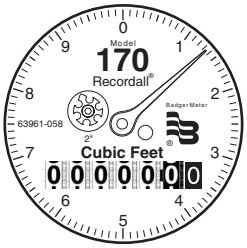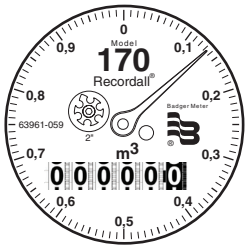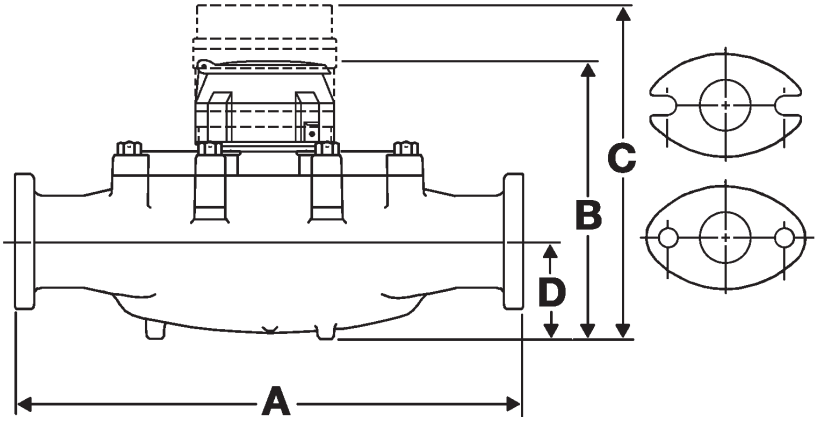
MODEL	GALLON	CU.FT.	CU. METER
M170	100	10	1