Attachment A

RGP Notice of Intent and Supporting Laboratory Data

II. Suggested Format for the Remediation General Permit Notice of Intent (NOI)

A. General site information:

1. Name of site:	Site address: 399 Northampton Road Street:		
	City: Amherst	State: MA	Zip: 01002
2. Site owner	Contact Person: Paul Belanger		
	Telephone: 508-612-0834	Email: paul.belanger@nouriaenergy.com	
	Mailing address: Nouria Energy Corporation, 326 Clark Street Street:		
Owner is (check one): ☐ Federal ☐ State/Tribal ■ Private ☐ Other; if so, specify:	City: Worcester	State: MA	Zip: 01606
3. Site operator, if different than owner same as Site Owner	Contact Person:		
	Telephone:	Email:	
	Mailing address: Street:		
	City:	State:	Zip:
4. NPDES permit number assigned by EPA: NA NPDES permit is (check all that apply: ☐ RGP ☐ DGP ☐ CGP ☐ MSGP ☐ Individual NPDES permit ☐ Other; if so, specify:	5. Other regulatory program(s) that apply to the site (check all that apply): ■ MA Chapter 21e; list RTN(s): 1-0687 ☐ NH Groundwater Management Permit or Groundwater Release Detection Permit: ☐ CERCLA ☐ UIC Program ☐ POTW Pretreatment ☐ CWA Section 404		

B. Receiving water information:

1. Name of receiving water(s):	Waterbody identification of receiving water(s):	Classification of receiving water(s):
Unnamed Tributary to Mill River (MA34-25_2012)	NA	B (Mill River)

Receiving water is (check any that apply): ☐ Outstanding Resource Water ☐ Ocean Sanctuary ☐ territorial sea ☐ Wild and Scenic River

2. Has the operator attached a location map in accordance with the instructions in B, above? (check one): ■ Yes ☐ No

Are sensitive receptors present near the site? (check one): ☐ Yes ■ No
If yes, specify:

3. Indicate if the receiving water(s) is listed in the State's Integrated List of Waters (i.e., CWA Section 303(d)). Include which designated uses are impaired, and any pollutants indicated. Also, indicate if a final TMDL is available for any of the indicated pollutants. For more information, contact the appropriate State as noted in Part 4.6 of the RGP. NA

4. Indicate the seven day-ten-year low flow (7Q10) of the receiving water determined in accordance with the instructions in Appendix V for sites located in Massachusetts and Appendix VI for sites located in New Hampshire.	0.00344 cfs
5. Indicate the requested dilution factor for the calculation of water quality-based effluent limitations (WQBELs) determined in accordance with the instructions in Appendix V for sites in Massachusetts and Appendix VI for sites in New Hampshire.	1.01

6. Has the operator received confirmation from the appropriate State for the 7Q10and dilution factor indicated? (check one): ☐ Yes ■ No
If yes, indicate date confirmation received:

7. Has the operator attached a summary of receiving water sampling results as required in Part 4.2 of the RGP in accordance with the instruction in Appendix VIII? (check one): ■ Yes ☐ No

C. Source water information:

1. Source water(s) is (check any that apply):

■ Contaminated groundwater Has the operator attached a summary of influent sampling results as required in Part 4.2 of the RGP in accordance with the instruction in Appendix VIII? (check one): ■ Yes ☐ No	☐ Contaminated surface water Has the operator attached a summary of influent sampling results as required in Part 4.2 of the RGP in accordance with the instruction in Appendix VIII? (check one): ☐ Yes ☐ No	☐ The receiving water ☐ A surface water other than the receiving water; if so, indicate waterbody:	☐ Potable water; if so, indicate municipality or origin: ☐ Other; if so, specify:

2. Source water contaminants: ammonia, chloride, suspended solids, metals, fuels parameters	
a. For source waters that are contaminated groundwater or contaminated surface water, indicate are any contaminants present that are not included in the RGP? (check one): ☐ Yes ■ No If yes, indicate the contaminant(s) and the maximum concentration present in accordance with the instructions in Appendix VIII.	b. For a source water that is a surface water other than the receiving water, potable water or other, indicate any contaminants present at the maximum concentration in accordance with the instructions in Appendix VIII? (check one): ☐ Yes ☐ No
3. Has the source water been previously chlorinated or otherwise contains residual chlorine? (check one): ☐ Yes ■ No	

D. Discharge information

1.The discharge(s) is a(n) (check any that apply): ☐ Existing discharge ■ New discharge ☐ New source	
Outfall(s): Treated water to be discharged to a catch basin west of USTs. Discharge will flow west through private storm sewer before discharging to unnamed waterbody west of site.	Outfall location(s): (Latitude, Longitude) 42.366205, -72.535576
Discharges enter the receiving water(s) via (check any that apply): ☐ Direct discharge to the receiving water ■ Indirect discharge, if so, specify: Private storm sewer system for site and adjacent commercial complex to west. System discharges to unnamed waterbody west of site. ■ A private storm sewer system ☐ A municipal storm sewer system If the discharge enters the receiving water via a private or municipal storm sewer system: Has notification been provided to the owner of this system? (check one): ☐ Yes ■ No Has the operator has received permission from the owner to use such system for discharges? (check one): ☐ Yes ■ No, if so, explain, with an estimated timeframe for obtaining permission: Owner of private storm sewer system to be notified in writing upon receipt of EPA approval. Has the operator attached a summary of any additional requirements the owner of this system has specified? (check one): ☐ Yes ■ No	
Provide the expected start and end dates of discharge(s) (month/year): August 2018 (discharge duration expected to be approximately 1 week) Indicate if the discharge is expected to occur over a duration of: ■ less than 12 months ☐ 12 months or more ☐ is an emergency discharge	
Has the operator attached a site plan in accordance with the instructions in D, above? (check one): ■ Yes ☐ No	

<table>
<tr><th>2. Activity Category: (check all that apply)</th><th colspan="2">3. Contamination Type Category: (check all that apply)</th></tr>
<tr><td rowspan="4">☐ I – Petroleum-Related Site Remediation
☐ II – Non-Petroleum-Related Site Remediation
■ III – Contaminated Site Dewatering
☐ IV – Dewatering of Pipelines and Tanks
☐ V – Aquifer Pump Testing
☐ VI – Well Development/Rehabilitation
☐ VII – Collection Structure Dewatering/Remediation
☐ VIII – Dredge-Related Dewatering</td><td colspan="2">a. If Activity Category I or II: (check all that apply)

☐ A. Inorganics
☐ B. Non-Halogenated Volatile Organic Compounds
☐ C. Halogenated Volatile Organic Compounds
☐ D. Non-Halogenated Semi-Volatile Organic Compounds
☐ E. Halogenated Semi-Volatile Organic Compounds
☐ F. Fuels Parameters</td></tr>
<tr><td colspan="2">b. If Activity Category III, IV, V, VI, VII or VIII: (check either G or H)</td></tr>
<tr><td>■ G. Sites with Known Contamination</td><td>☐ H. Sites with Unknown Contamination</td></tr>
<tr><td>c. If Category III-G, IV-G, V-G, VI-G, VII-G or VIII-G: (check all that apply)

■ A. Inorganics
☐ B. Non-Halogenated Volatile Organic Compounds
☐ C. Halogenated Volatile Organic Compounds
☐ D. Non-Halogenated Semi-Volatile Organic Compounds
☐ E. Halogenated Semi-Volatile Organic Compounds
■ F. Fuels Parameters</td><td>d. If Category III-H, IV-H, V-H, VI-H, VII-H or VIII-H Contamination Type Categories A through F apply</td></tr>
</table>

4. Influent and Effluent Characteristics

Parameter	Known or believed absent	Known or believed present	# of samples	Test method (#)	Detection limit (µg/l)	Influent		Effluent Limitations	
						Daily maximum (µg/l)	Daily average (µg/l)	TBEL	WQBEL
A. Inorganics									
Ammonia	✓		1	E350.1	2,500	<2,500	<2,500	Report mg/L	---
Chloride		✓	1	EPA 300.0	497	130,000	130,000	Report µg/l	---
Total Residual Chlorine	✓		1	SM4500-G	6	<20.0	<20.0	0.2 mg/L	11 ug/L
Total Suspended Solids		✓	1	SM2540D	8,600	1,140,000	1,140,000	30 mg/L	---
Antimony	✓		1	6010C	8.0	<30.0	<30.0	206 µg/L	
Arsenic		✓	1	6010C	1.38	78.30	78.30	104 µg/L	10 ug/L
Cadmium		✓	1	6010C	0.4	20.6	20.6	10.2 µg/L	0.9523 ug/L
Chromium III		✓	1	Calculation	5.3	220	220	323 µg/L	
Chromium VI	✓		1	SM3500-C	21	<50.0	<50.0	323 µg/L	11.6 ug/L
Copper		✓	1	6010C	2.3	915	915	242 µg/L	39.7 ug/L
Iron		✓	1	6010C	4.5	161,000	161,000	5,000 µg/L	1,014 ug/L
Lead		✓	1	6010C	6.2	164	164	160 µg/L	27.37 ug/L
Mercury		✓	1	EPA 245.1	0.14	0.33	0.33	0.739 µg/L	
Nickel		✓	1	6010C	0.9	125	125	1,450 µg/L	
Selenium	✓		1	6010C	4.2	<15.0	<15.0	235.8 µg/L	5.1 ug/L
Silver	✓		1	6010C	0.6	<5.0	<5.0	35.1 µg/L	
Zinc		✓	1	6010C	7.9	9,060	9,060	420 µg/L	
Cyanide	✓		1	EPA 335.4	4.70	<5.00	<5.00	178 mg/L	
B. Non-Halogenated VOCs									
Total BTEX	✓		1	8260C	2.37	<2.37	<2.37	100 µg/L	---
Benzene	✓		1	8260C	1.70	<1.70	<1.70	5.0 µg/L	---
1,4 Dioxane	✓		1	8260C	29	<29	<29	200 µg/L	---
Acetone	✓		1	8260C	18.8	<18.8	<18.8	7.97 mg/L	---
Phenol	✓		1	8270D	0.603	<0.603	<0.603	1,080 µg/L	

Parameter	Known or believed absent	Known or believed present	# of samples	Test method (#)	Detection limit (µg/l)	Influent		Effluent Limitations	
						Daily maximum (µg/l)	Daily average (µg/l)	TBEL	WQBEL
C. Halogenated VOCs									
Carbon Tetrachloride	✓		1	8260C	1.96	<1.96	<1.96	4.4 µg/L	1.6 ug/L
1,2 Dichlorobenzene	✓		1	8260C	1.22	<1.22	<1.22	600 µg/L	---
1,3 Dichlorobenzene	✓		1	8260C	1.50	<1.50	<1.50	320 µg/L	---
1,4 Dichlorobenzene	✓		1	8260C	1.36	<1.36	<1.36	5.0 µg/L	---
Total dichlorobenzene	✓		1	8260C	1.50	<1.50	<1.50	763 µg/L in NH	---
1,1 Dichloroethane	✓		1	8260C	1.46	<1.46	<1.46	70 µg/L	---
1,2 Dichloroethane	✓		1	8260C	0.90	<0.90	<0.90	5.0 µg/L	---
1,1 Dichloroethylene	✓		1	8260C	1.57	<1.57	<1.57	3.2 µg/L	---
Ethylene Dibromide	✓		1	8260C	1.50	<1.50	<1.50	0.05 µg/L	---
Methylene Chloride	✓		1	8260C	1.92	<1.92	<1.92	4.6 µg/L	---
1,1,1 Trichloroethane	✓		1	8260C	1.22	<1.22	<1.22	200 µg/L	---
1,1,2 Trichloroethane	✓		1	8260C	1.54	<1.54	<1.54	5.0 µg/L	---
Trichloroethylene	✓		1	8260C	1.78	<1.78	<1.78	5.0 µg/L	---
Tetrachloroethylene	✓		1	8260C	1.56	2.20	2.20	5.0 µg/L	
cis-1,2 Dichloroethylene	✓		1	8260C	1.98	<1.98	<1.98	70 µg/L	---
Vinyl Chloride	✓		1	8260C	2.01	<2.01	<2.01	2.0 µg/L	---
D. Non-Halogenated SVOCs									
Total Phthalates	✓		1	8270D	2.51	0.379	0.379	190 µg/L	
Diethylhexyl phthalate	✓		1	8270D	2.51	0.596	0.596	101 µg/L	
Total Group I PAHs	✓		1	8270D	0.542	0.935	0.935	1.0 µg/L	---
Benzo(a)anthracene	✓		1	8270D	0.501	0.757	0.757	As Total PAHs	0.0039 ug/L
Benzo(a)pyrene	✓		1	8270D	0.525	0.748	0.748		0.0039 ug/L
Benzo(b)fluoranthene	✓		1	8270D	0.408	0.935	0.935		0.0039 ug/L
Benzo(k)fluoranthene	✓		1	8270D	0.449	0.907	0.907		0.0039 ug/L
Chrysene	✓		1	8270D	0.497	0.832	0.832		0.0039 ug/L
Dibenzo(a,h)anthracene	✓		1	8270D	0.421	<0.421	<0.421		0.0039 ug/L
Indeno(1,2,3-cd)pyrene	✓		1	8270D	0.542	<0.542	<0.542		0.0039 ug/L

Parameter	Known or believed absent	Known or believed present	# of samples	Test method (#)	Detection limit (µg/l)	Influent		Effluent Limitations	
						Daily maximum (µg/l)	Daily average (µg/l)	TBEL	WQBEL
Total Group II PAHs	✓		1	8270D	0.495	3.075	3.075	100 µg/L	---
Naphthalene	✓		1	8270D	0.640	<0.640	<0.640	20 µg/L	---
E. Halogenated SVOCs									
Total PCBs	✓							0.000064 µg/L	---
Pentachlorophenol	✓		1	8270D	0.349	<0.349	<0.349	1.0 µg/L	---
F. Fuels Parameters									
Total Petroleum Hydrocarbons		✓	1	8100Mod.	200	1,700	1,700	5.0 mg/L	---
Ethanol	✓		1	8260C	66.0	<66.0	<66.0	Report mg/L	---
Methyl-tert-Butyl Ether		✓	1	8260C	1.48	72.0	72.0	70 µg/L	20 ug/L
tert-Butyl Alcohol		✓	1	8260C	15.7	1,640	1,640	120 µg/L in MA 40 µg/L in NH	---
tert-Amyl Methyl Ether		✓	1	8260C	1.49	8.00	8.00	90 µg/L in MA 140 µg/L in NH	---
Other (i.e., pH, temperature, hardness, salinity, LC_{50}, additional pollutants present); if so, specify:									
Total Dissolved Solids		✓	1	SM18-22	6,000	486,000	486,000		

E. Treatment system information

1. Indicate the type(s) of treatment that will be applied to effluent prior to discharge: (check all that apply)

☐ Adsorption/Absorption ☐ Advanced Oxidation Processes ☐ Air Stripping ■ Granulated Activated Carbon ("GAC")/Liquid Phase Carbon Adsorption
☐ Ion Exchange ☐ Precipitation/Coagulation/Flocculation ■ Separation/Filtration ☐ Other; if so, specify:

2. Provide a written description of all treatment system(s) or processes that will be applied to the effluent prior to discharge.

Pump(s) to dewater site excavation will discharge effluent to frac tank(s) for settling suspended solids. Discharge from frac tank(s) will pass through 10-um bag filters to remove additional particles and granular activated carbon to remove organics, and then flow meter totalizer prior to discharge.

Identify each major treatment component (check any that apply):
■ Fractionation tanks☐ Equalization tank ☐ Oil/water separator ☐ Mechanical filter ☐ Media filter
☐ Chemical feed tank ☐ Air stripping unit ■ Bag filter ■ Other; if so, specify: (2) 2,000-pound GAC filters

Indicate if either of the following will occur (check any that apply):
☐ Chlorination ☐ De-chlorination

3. Provide the **design flow capacity** in gallons per minute (gpm) of the most limiting component. Indicate the most limiting component: Is use of a flow meter feasible? (check one): ■ Yes ☐ No, if so, provide justification:	
Provide the proposed maximum effluent flow in gpm.	100
Provide the average effluent flow in gpm.	100
If Activity Category IV applies, indicate the estimated total volume of water that will be discharged:	NA

4. Has the operator attached a schematic of flow in accordance with the instructions in E, above? (check one): ■ Yes ☐ No

F. Chemical and additive information

1. Indicate the type(s) of chemical or additive that will be applied to effluent prior to discharge or that may otherwise be present in the discharge(s): (check all that apply)

☐ Algaecides/biocides ☐ Antifoams ☐ Coagulants ☐ Corrosion/scale inhibitors ☐ Disinfectants ☐ Flocculants ☐ Neutralizing agents ☐ Oxidants ☐ Oxygen ☐ scavengers ☐ pH conditioners ☐ Bioremedial agents, including microbes ☐ Chlorine or chemicals containing chlorine ☐ Other; if so, specify:

2. Provide the following information for each chemical/additive, using attachments, if necessary:
   See Attachment D.
   a. Product name, chemical formula, and manufacturer of the chemical/additive;
   b. Purpose or use of the chemical/additive or remedial agent;
   c. Material Safety Data Sheet (MSDS) and Chemical Abstracts Service (CAS) Registry number for each chemical/additive;
   d. The frequency (hourly, daily, etc.), duration (hours, days), quantity (maximum and average), and method of application for the chemical/additive;
   e. Any material compatibility risks for storage and/or use including the control measures used to minimize such risks; and
   f. If available, the vendor's reported aquatic toxicity (NOAEL and/or LC50 in percent for aquatic organism(s)).

3. Has the operator attached an explanation which demonstrates that the addition of such chemicals/additives may be authorized under this general permit in accordance with the instructions in F, above? (check one): ☐ Yes ■ No; if no, has the operator attached data that demonstrates each of the 126 priority pollutants in CWA Section 307(a) and 40 CFR Part 423.15(j)(1) are non-detect in discharges with the addition of the proposed chemical/additive? (check one): ☐ Yes ■ No

G. Endangered Species Act eligibility determination

1. Indicate under which criterion the discharge(s) is eligible for coverage under this general permit:

■ **FWS Criterion A**: No endangered or threatened species or critical habitat are in proximity to the discharges or related activities or come in contact with the "action area".

☐ **FWS Criterion B**: Formal or informal consultation with the FWS under section 7 of the ESA resulted in either a no jeopardy opinion (formal consultation) or a written concurrence by FWS on a finding that the discharges and related activities are "not likely to adversely affect" listed species or critical habitat (informal consultation). Has the operator completed consultation with FWS? (check one): ☐ Yes ☐ No; if no, is consultation underway? (check one): ☐ Yes ☐ No

☐ **FWS Criterion C**: Using the best scientific and commercial data available, the effect of the discharges and related activities on listed species and critical habitat have been evaluated. Based on those evaluations, a determination is made by EPA, or by the operator and affirmed by EPA, that the discharges and related activities will have "no effect" on any federally threatened or endangered listed species or designated critical habitat under the jurisdiction of the FWS. This determination was made by: (check one) ☐ the operator ☐ EPA ☐ Other; if so, specify:

■ **NMFS Criterion**: A determination made by EPA is affirmed by the operator that the discharges and related activities will have "no effect" or are "not likely to adversely affect" any federally threatened or endangered listed species or critical habitat under the jurisdiction of NMFS and will not result in any take of listed species. Has the operator previously completed consultation with NMFS? (check one): ☐ Yes ■ No

2. Has the operator attached supporting documentation of ESA eligibility in accordance with the instructions in Appendix I, and G, above? (check one): ■ Yes ☐ No

Does the supporting documentation include any written concurrence or finding provided by the Services? (check one): ☐ Yes ■ No; if yes, attach.

H. National Historic Preservation Act eligibility determination

1. Indicate under which criterion the discharge(s) is eligible for coverage under this general permit:

■ **Criterion A**: No historic properties are present. The discharges and discharge-related activities (e.g., BMPs) do not have the potential to cause effects on historic properties.

☐ **Criterion B**: Historic properties are present. Discharges and discharge related activities do not have the potential to cause effects on historic properties.

☐ **Criterion C**: Historic properties are present. The discharges and discharge-related activities have the potential to have an effect or will have an adverse effect on historic properties.

2. Has the operator attached supporting documentation of NHPA eligibility in accordance with the instructions in H, above? (check one): ☐ Yes ■ No

Does the supporting documentation include any written agreement with the State Historic Preservation Officer (SHPO), Tribal Historic Preservation Officer (TPHO), or other tribal representative that outlines measures the operator will carry out to mitigate or prevent any adverse effects on historic properties? (check one): ☐ Yes ■ No

I. Supplemental information

Describe any supplemental information being provided with the NOI. Include attachments if required or otherwise necessary.

This NOI is appended to a narrative description of planned activities along with required supporting documentation, i.e, figures, laboratory data, US FWS information.

Has the operator attached data, including any laboratory case narrative and chain of custody used to support the application? (check one): ■ Yes ☐ No

Has the operator attached the certification requirement for the Best Management Practices Plan (BMPP)? (check one): ■ Yes ☐ No

J. Certification requirement

I certify under penalty of law that this document and all attachments were prepared under my direction or supervision in accordance with a system designed to assure that qualified personnel properly gathered and evaluated the information submitted. Based on my inquiry of the person or persons who manage the system, or those persons directly responsible for gathering the information, the information submitted is, to the best of my knowledge and belief, true, accurate, and complete. I have no personal knowledge that the information submitted is other than true, accurate, and complete. I am aware that there are significant penalties for submitting false information, including the possibility of fine and imprisonment for knowing violations.

BMPP certification statement: A BMPP meeting the requirements of the RGP will be prepared and implemented prior to initiating the discharge.	
Notification provided to the appropriate State, including a copy of this NOI, if required.	Check one: Yes ■ No ☐
Notification provided to the municipality in which the discharge is located, including a copy of this NOI, if requested.	Check one: Yes ■ No ☐
Notification provided to the owner of a private or municipal storm sewer system, if such system is used for site discharges, including a copy of this NOI, if requested.	Check one: Yes ■ No ☐ NA ☐
Permission obtained from the owner of a private or municipal storm sewer system, if such system is used for site discharges. If yes, attach additional conditions. If no, attach explanation and timeframe for obtaining permission.	Check one: Yes ■ No ☐ NA ☐
Notification provided to the owner/operator of the area associated with activities covered by an additional discharge permit(s). Additional discharge permit is (check one): ☐ RGP ☐ DGP ☐ CGP ☐ MSGP ☐ Individual NPDES permit ☐ Other; if so, specify:	Check one: Yes ☐ No ☐ NA ■
Signature: Paul E Belanger	Date: 7/19/18
Print Name and Title: Paul Belanger, Construction Project Manager	

eurofins | Spectrum Analytical

☐ Final Report
☑ Revised Report

Report Date:
20-Jul-18 10:54

Laboratory Report
SC48298

CMG Environmental, Inc.
67 Hall Road
Sturbridge, MA 01566
Attn: Gary Magnuson

Project: 399 N. Hampton St - Amherst, MA
Project #: 2018-136

I attest that the information contained within the report has been reviewed for accuracy and checked against the quality control requirements for each method. These results relate only to the sample(s) as received.
All applicable NELAC requirements have been met.

Massachusetts # M-MA138/MA1110
Connecticut # PH-0777
Florida # E87936
Maine # MA138
New Hampshire # 2972/2538
New Jersey # MA011
New York # 11393
Pennsylvania # 68-04426/68-02924
Rhode Island # LAO00348
USDA # P330-15-00375
Vermont # VT-11393

Authorized by:

Dawn Wojcik
Laboratory Director

Eurofins Spectrum Analytical holds primary certification in the State of Massachusetts for the analytes as indicated with an X in the "Cert." column within this report. Please note that the State of Massachusetts does not offer certification for all analytes. Please refer to our website for specific certification holdings in each state.
Please note that this report contains 34 pages of analytical data plus Chain of Custody document(s). When the Laboratory Report is indicated as revised, this report supersedes any previously dated reports for the laboratory ID(s) referenced above. Where this report identifies subcontracted analyses, copies of the subcontractor's test report are available upon request. This report may not be reproduced, except in full, without written approval from Eurofins Spectrum Analytical, Inc.

Eurofins Spectrum Analytical, Inc. is a NELAC accredited laboratory organization and meets NELAC testing standards. Use of the NELAC logo however does not insure that Eurofins Spectrum Analytical, Inc. is currently accredited for the specific method or analyte indicated. Please refer to our Quality web page at www.spectrum-analytical.com for a full listing of our current certifications and fields of accreditation. States in which Eurofins Spectrum Analytical, Inc. holds NELAC certification are New York, New Hampshire, New Jersey, Pennsylvania and Florida. All analytical work for Volatile Organic and Air analysis are transferred to and conducted at our 830 Silver Street location (PA-68-04426).

Please contact the Laboratory or Technical Director at 800-789-9115 with any questions regarding the data contained in this laboratory report.

Sample Summary

Work Order: SC48298

Project: 399 N. Hampton St - Amherst, MA

Project Number: 2018-136

Laboratory ID	Client Sample ID	Matrix	Date Sampled	Date Received
SC48298-01	MW	Ground Water	29-Jun-18 15:19	29-Jun-18 16:15

MassDEP Analytical Protocol Certification Form

Laboratory Name: Eurofins Spectrum Analytical, Inc.	**Project #:** 2018-136
Project Location: 399 N. Hampton St - Amherst, MA	**RTN:**
This form provides certifications for the following data set:	SC48298-01
Matrices: Ground Water	

CAM Protocol

✓ 8260 VOC CAM II A	✓ 7470/7471 Hg CAM III B	MassDEP VPH CAM IV A	8081 Pesticides CAM V B	✓ 7196 Hex Cr CAM VI B	MassDEP APH CAM IX A
✓ 8270 SVOC CAM II B	7010 Metals CAM III C	MassDEP EPH CAM IV B	8151 Herbicides CAM V C	8330 Explosives CAM VIII A	TO-15 VOC CAM IX B
✓ 6010 Metals CAM III A	6020 Metals CAM III D	8082 PCB CAM V A	✓ 9012 Total Cyanide/PAC CAM VI A	9014 Total Cyanide/PAC CAM VI A	6860 Perchlorate CAM VIII B

Affirmative responses to questions A through F are required for Presumptive Certainty'status

A	Were all samples received in a condition consistent with those described on the Chain of Custody, properly preserved (including temperature) in the field or laboratory, and prepared/analyzed within method holding times?	✓ Yes No
B	Were the analytical method(s) and all associated QC requirements specified in the selected CAM protocol(s) followed?	✓ Yes No
C	Were all required corrective actions and analytical response actions specified in the selected CAM protocol(s) implemented for all identified performance standard non-conformances?	✓ Yes No
D	Does the laboratory report comply with all the reporting requirements specified in CAM VII A, "Quality Assurance and Quality Control Guidelines for the Acquisition and Reporting of Analytical Data"?	✓ Yes No
E	a. VPH, EPH, and APH Methods only: Was each method conducted without significant modification(s)? b. APH and TO-15 Methods only: Was the complete analyte list reported for each method?	Yes No Yes No
F	Were all applicable CAM protocol QC and performance standard non-conformances identified and evaluated in a laboratory narrative (including all "No" responses to questions A through E)?	✓ Yes No

Responses to questions G, H and I below are required for Presumptive Certainty'status

G	Were the reporting limits at or below all CAM reporting limits specified in the selected CAM protocol(s)?	Yes ✓ No

Data User Note: ***Data that achieve Presumptive Certainty'status may not necessarily meet the data usability and representativeness requirements described in 310 CMR 40. 1056 (2)(k) and WSC-07-350.***

H	Were all QC performance standards specified in the CAM protocol(s) achieved?	Yes ✓ No
I	Were results reported for the complete analyte list specified in the selected CAM protocol(s)?	Yes ✓ No

All negative responses are addressed in a case narrative on the cover page of this report.

I, the undersigned, attest under the pains and penalties of perjury that, based upon my personal inquiry of those responsible for obtaining the information, the material contained in this analytical report is, to the best of my knowledge and belief, accurate and complete.

Dawn E. Wojcik

Dawn E. Wojcik
Laboratory Director
Date: 7/20/2018

CASE NARRATIVE:

Data has been reported to the MDL. This report includes estimated concentrations detected below the RDL and above the MDL (J-Flag).

All non-detects and all results below the detection limit are reported as "<" (less than) the detection limit in this report.

The samples were received 3.9 degrees Celsius, please refer to the Chain of Custody for details specific to temperature upon receipt. An infrared thermometer with a tolerance of +/- 1.0 degrees Celsius was used immediately upon receipt of the samples.

If a Matrix Spike (MS), Matrix Spike Duplicate (MSD) or Duplicate (DUP) was not requested on the Chain of Custody, method criteria may have been fulfilled with a source sample not of this Sample Delivery Group. If method or program required MS/MSD/Dup were not performed, sufficient sample was not provided to the laboratory.

MADEP has published a list of analytical methods (CAM) which provides a series of recommended protocols for the acquisition, analysis and reporting of analytical data in support of MCP decisions. "Presumptive Certainty" can be established only for those methods published by the MADEP in the MCP CAM. The compounds and/or elements reported were specifically requested by the client on the Chain of Custody and in some cases may not include the full analyte list as defined in the method. Regulatory limits may not be achieved if specific method and/or technique was not requested on the Chain of Custody.

According to WSC-CAM 5/2009 Rev.1, Table 11 A-1, recovery for some VOC analytes have been deemed potentially difficult. Although they may still be within the recommended recovery range, a range has been set based on historical control limits.

Some target analytes which are not listed as exceptions in the Summary of CAM Reporting Limits may exceed the recommended RL based on sample initial volume or weight provided, % moisture content, or responsiveness of a particular analyte to purge and trap instrumentation.

Analyses for Total Hardness, pH, and Total Residual Chlorine fall under the state of Pennsylvania code Chapter 252.6 accreditation by rule.

July 16, 2018 Report Revision Case Narrative:

This report has been revised to report the 8260 and 8270 to the MDL per client request.

July 16, 2018 Report Revision Case Narrative:

This report has been revised to include analyses added as listed in the appendix at the end of this report.

See below for any non-conformances and issues relating to quality control samples and/or sample analysis/matrix.

EPA 245.1/7470A

Duplicates:

1809253-DUP1 *Source: SC48298-01*

The RPD exceeded the QC control limits; however precision is demonstrated with acceptable RPD values for MS/MSD.

Mercury

EPA 300.0

Samples:

SC48298-01 *MW*

Sample dilution required for high concentration of target analytes to be within the instrument calibration range.

Chloride

SM3500-Cr-B (11)/7196A

SM3500-Cr-B (11)/7196A

Samples:

SC48298-01 *MW*

The Reporting Limit has been raised to account for matrix interference.

Hexavalent Chromium

SW846 6010C

Samples:

SC48298-01 *MW*

MRL raised to correlate to batch QC reporting limits.

Cadmium
Nickel

Sample dilution required for high concentration of target analytes to be within the instrument calibration range.

Magnesium
Zinc

The Reporting Limit has been raised to account for matrix interference.

Antimony

SW846 8260C

Calibration:

1806025

Analyte quantified by quadratic equation type calibration.

1,1-Dichloropropene
1,2,3-Trichlorobenzene
1,2,4-Trichlorobenzene
1,2,4-Trimethylbenzene
1,2-Dibromo-3-chloropropane
1,3,5-Trimethylbenzene
2-Chlorotoluene
2-Hexanone (MBK)
4-Chlorotoluene
4-Isopropyltoluene
4-Methyl-2-pentanone (MIBK)
Bromodichloromethane
Bromoform
Carbon tetrachloride
cis-1,3-Dichloropropene
Dibromochloromethane
Ethylbenzene
m,p-Xylene
Naphthalene
n-Butylbenzene
n-Propylbenzene
o-Xylene
sec-Butylbenzene
Styrene
tert-Butylbenzene
trans-1,3-Dichloropropene

SW846 8260C

Calibration:

1806025

This affected the following samples:

1809151-BLK1
1809151-BS1
1809151-BSD1
MW
S820051-ICV1
S820540-CCV1

Blanks:

1809151-BLK1

This compound is a common laboratory contaminant.

Chloroform

Laboratory Control Samples:

1809151 BS/BSD

2,2-Dichloropropane percent recoveries (138/122) are outside individual acceptance criteria, but within overall method allowances. All reported results of the following samples are considered to have a potentially high bias:

MW

Chloromethane percent recoveries (71/66) are outside individual acceptance criteria, but within overall method allowances. All reported results of the following samples are considered to have a potentially low bias:

MW

Ethanol percent recoveries (131/112) are outside individual acceptance criteria, but within overall method allowances. All reported results of the following samples are considered to have a potentially high bias:

MW

Samples:

S820540-CCV1

Analyte percent difference is outside individual acceptance criteria (20), but within overall method allowances.

2,2-Dichloropropane (37.5%)
Chloromethane (-29.0%)
Ethyl tert-butyl ether (24.0%)
Tert-Butanol / butyl alcohol (27.5%)
Vinyl chloride (20.4%)

Analyte percent drift is outside individual acceptance criteria (20), but within overall method allowances.

Acetone (22.3%)
Ethanol (31.2%)

This affected the following samples:

1809151-BLK1
1809151-BS1
1809151-BSD1
MW

SC48298-01 *MW*

Sample dilution required for high concentration of target analytes to be within the instrument calibration range.

SW846 8270D

Calibration:

1804057

Analyte quantified by quadratic equation type calibration.

2,4-Dinitrophenol
4,6-Dinitro-2-methylphenol
Benzoic acid
Carbazole
Pentachlorophenol

This affected the following samples:

1809205-BLK1
1809205-BS1
1809205-BSD1
MW
S818863-ICV1
S820656-CCV1
S820675-CCV1
S820789-CCV1

Laboratory Control Samples:

1809205 BS/BSD

4-Nitrophenol percent recoveries (29/30) are outside individual acceptance criteria, but within overall method allowances. All reported results of the following samples are considered to have a potentially low bias:

MW

Benzidine percent recoveries (166/143) are outside individual acceptance criteria, but within overall method allowances. All reported results of the following samples are considered to have a potentially high bias:

MW

Benzoic acid percent recoveries (27/27) are outside individual acceptance criteria, but within overall method allowances. All reported results of the following samples are considered to have a potentially low bias:

MW

Phenol percent recoveries (27/26) are outside individual acceptance criteria, but within overall method allowances. All reported results of the following samples are considered to have a potentially low bias:

MW

1809205-BS1

Analyte is out of acceptance range in the QC spike but the total number of out of range analytes is within overall method criteria.

4-Nitrophenol
Benzoic acid
Phenol

1809205-BSD1

Analyte is out of acceptance range in the QC spike but the total number of out of range analytes is within overall method criteria.

Benzoic acid
Phenol

Samples:

S820656-CCV1

SW846 8270D

Samples:

S820656-CCV1

Analyte percent difference is outside individual acceptance criteria (20), but within overall method allowances.

3,3´-Dichlorobenzidine (39.5%)
4-Chlorophenyl phenyl ether (25.2%)
Aniline (-22.5%)
Azobenzene/Diphenyldiazene (25.8%)
Benzidine (31.1%)
Diethyl phthalate (25.1%)
Hexachlorocyclopentadiene (21.4%)
Nitrobenzene (37.5%)

Analyte percent drift is outside individual acceptance criteria (20), but within overall method allowances.

2,4-Dinitrophenol (-24.1%)
Benzoic acid (-24.9%)

This affected the following samples:

1809205-BLK1
1809205-BS1
1809205-BSD1

S820675-CCV1

Analyte percent difference is outside individual acceptance criteria (20), but within overall method allowances.

3,3´-Dichlorobenzidine (40.0%)
4-Chlorophenyl phenyl ether (32.8%)
4-Nitroaniline (36.7%)
Aniline (-22.5%)
Azobenzene/Diphenyldiazene (33.2%)
Benzidine (30.8%)
Benzo (b) fluoranthene (45.1%)
Benzo (g,h,i) perylene (20.6%)
Dibenzo (a,h) anthracene (36.3%)
Diethyl phthalate (26.2%)
Hexachlorobutadiene (23.5%)
Nitrobenzene (52.4%)
N-Nitrosodiphenylamine (32.7%)

Analyte percent drift is outside individual acceptance criteria (20), but within overall method allowances.

2,4-Dinitrophenol (-23.4%)
Pentachlorophenol (-32.4%)

This affected the following samples:

MW

SC48298-01 *MW*

Surrogates are outside of acceptance critiera but no extra volume is available for re-extraction confirmation.

2-Fluorobiphenyl
Nitrobenzene-d5
Phenol-d5
Terphenyl-dl4

Sample Acceptance Check Form

Client:	CMG Environmental, Inc.
Project:	399 N. Hampton St - Amherst, MA / 2018-136
Work Order:	SC48298
Sample(s) received on:	6/29/2018

The following outlines the condition of samples for the attached Chain of Custody upon receipt.

	Yes	No	N/A
Were custody seals present?	☐	☑	☐
Were custody seals intact?	☐	☐	☑
Were samples received at a temperature of ≤ 6°C?	☑	☐	☐
Were samples cooled on ice upon transfer to laboratory representative?	☑	☐	☐
Were sample containers received intact?	☑	☐	☐
Were samples properly labeled (labels affixed to sample containers and include sample ID, site location, and/or project number and the collection date)?	☑	☐	☐
Were samples accompanied by a Chain of Custody document?	☑	☐	☐
Does Chain of Custody document include proper, full, and complete documentation, which shall include sample ID, site location, and/or project number, date and time of collection, collector's name, preservation type, sample matrix and any special remarks concerning the sample?	☐	☑	☐
Did sample container labels agree with Chain of Custody document?	☑	☐	☐
Were samples received within method-specific holding times?	☑	☐	☐

Summary of Hits

Lab ID: SC48298-01 **Client ID:** MW

Parameter	Result	Flag	Reporting Limit	Units	Analytical Method
Trivalent Chromium	0.220		0.0100	mg/l	Calculation
Mercury	0.00033		0.00020	mg/l	EPA 245.1/7470A
Chloride	130	GS1, D	5.00	mg/l	EPA 300.0
Hardness	540		0.662	mg/l CaCO3	SM 2340B (11)
Total Dissolved Solids	486		10	mg/l	SM18-22 2540C
Total Suspended Solids	1140		20.0	mg/l	SM2540D (11)
Arsenic	0.07830		0.00400	mg/l	SW846 6010C
Cadmium	0.0206	R06	0.0055	mg/l	SW846 6010C
Calcium	74.4		0.100	mg/l	SW846 6010C
Chromium	0.220		0.0050	mg/l	SW846 6010C
Copper	0.915		0.0050	mg/l	SW846 6010C
Iron	161		0.125	mg/l	SW846 6010C
Lead	0.164		0.0075	mg/l	SW846 6010C
Magnesium	86.0	GS1, D	0.100	mg/l	SW846 6010C
Nickel	0.125	R06	0.0115	mg/l	SW846 6010C
Zinc	9.06	GS1, D	0.125	mg/l	SW846 6010C
Other Oil	Calculated as		0.2	mg/l	SW846 8100Mod.
Total Petroleum Hydrocarbons	1.7		0.2	mg/l	SW846 8100Mod.
Unidentified	1.7		0.2	mg/l	SW846 8100Mod.
Chloroform	1.50	J, D	5.00	µg/l	SW846 8260C
Isopropylbenzene	2.15	J, D	5.00	µg/l	SW846 8260C
Methyl tert-butyl ether	72.0	D	5.00	µg/l	SW846 8260C
n-Propylbenzene	5.50	D	5.00	µg/l	SW846 8260C
Tert-amyl methyl ether	8.00	D	5.00	µg/l	SW846 8260C
Tert-Butanol / butyl alcohol	1640	D	50.0	µg/l	SW846 8260C
Tetrachloroethene	2.20	J, D	5.00	µg/l	SW846 8260C
1-Methylnaphthalene	1.08		0.935	µg/l	SW846 8270D
Benzo (a) anthracene	0.757	J	0.935	µg/l	SW846 8270D
Benzo (a) pyrene	0.748	J	0.935	µg/l	SW846 8270D
Benzo (b) fluoranthene	0.935		0.935	µg/l	SW846 8270D
Benzo (g,h,i) perylene	0.495	J	0.935	µg/l	SW846 8270D
Benzo (k) fluoranthene	0.907	J	0.935	µg/l	SW846 8270D
Bis(2-ethylhexyl)phthalate	2.51	J	4.67	µg/l	SW846 8270D
Chrysene	0.832	J	0.935	µg/l	SW846 8270D
Di-n-octyl phthalate	0.766	J	4.67	µg/l	SW846 8270D
Fluoranthene	1.50		0.935	µg/l	SW846 8270D
Pyrene	1.08		0.935	µg/l	SW846 8270D

Please note that because there are no reporting limits associated with hazardous waste characterizations or micro analyses, this summary does not include hits from these analyses if included in this work order.

Sample Identification	Client Project #	Matrix	Collection Date/Time	Received
MW	2018-136	Ground Water	29-Jun-18 15:19	29-Jun-18
SC48298-01				

CAS No.	Analyte(s)	Result	Flag	Units	*RDL	MDL	Dilution	Method Ref.	Prepared	Analyzed	Analyst	Batch	Cert.
Volatile Organic Compounds													
Volatile Organic Compounds by SW846 8260 Prepared by method SW846 5030 Water MS			GS1										
76-13-1	1,1,2-Trichlorotrifluoroethane (Freon 113)	< 2.90	U, D	µg/l	5.00	2.90	5	SW846 8260C	02-Jul-18	02-Jul-18	GMA	1809151	
67-64-1	Acetone	< 18.8	U, D	µg/l	50.0	18.8	5	"	"	"	"	"	
107-13-1	Acrylonitrile	< 2.38	U, D	µg/l	2.50	2.38	5	"	"	"	"	"	
71-43-2	Benzene	< 1.70	U, D	µg/l	5.00	1.70	5	"	"	"	"	"	
108-86-1	Bromobenzene	< 1.40	U, D	µg/l	5.00	1.40	5	"	"	"	"	"	
74-97-5	Bromochloromethane	< 1.70	U, D	µg/l	5.00	1.70	5	"	"	"	"	"	
75-27-4	Bromodichloromethane	< 1.46	U, D	µg/l	2.50	1.46	5	"	"	"	"	"	
75-25-2	Bromoform	< 1.21	U, D	µg/l	5.00	1.21	5	"	"	"	"	"	
74-83-9	Bromomethane	< 2.23	U, D	µg/l	10.0	2.23	5	"	"	"	"	"	
78-93-3	2-Butanone (MEK)	< 3.52	U, D	µg/l	10.0	3.52	5	"	"	"	"	"	
104-51-8	n-Butylbenzene	< 2.34	U, D	µg/l	5.00	2.34	5	"	"	"	"	"	
135-98-8	sec-Butylbenzene	< 1.56	U, D	µg/l	5.00	1.56	5	"	"	"	"	"	
98-06-6	tert-Butylbenzene	< 1.48	U, D	µg/l	5.00	1.48	5	"	"	"	"	"	
75-15-0	Carbon disulfide	< 3.50	U, D	µg/l	10.0	3.50	5	"	"	"	"	"	
56-23-5	Carbon tetrachloride	< 1.96	U, D	µg/l	2.50	1.96	5	"	"	"	"	"	
108-90-7	Chlorobenzene	< 1.50	U, D	µg/l	5.00	1.50	5	"	"	"	"	"	
75-00-3	Chloroethane	< 2.02	U, D	µg/l	10.0	2.02	5	"	"	"	"	"	
67-66-3	Chloroform	**1.50**	J, D	µg/l	5.00	1.43	5	"	"	"	"	"	
74-87-3	Chloromethane	< 1.80	U, D	µg/l	10.0	1.80	5	"	"	"	"	"	
95-49-8	2-Chlorotoluene	< 1.56	U, D	µg/l	5.00	1.56	5	"	"	"	"	"	
106-43-4	4-Chlorotoluene	< 1.46	U, D	µg/l	5.00	1.46	5	"	"	"	"	"	
96-12-8	1,2-Dibromo-3-chloropropane	< 2.36	U, D	µg/l	10.0	2.36	5	"	"	"	"	"	
124-48-1	Dibromochloromethane	< 1.46	U, D	µg/l	2.50	1.46	5	"	"	"	"	"	
106-93-4	1,2-Dibromoethane (EDB)	< 1.50	U, D	µg/l	2.50	1.50	5	"	"	"	"	"	
74-95-3	Dibromomethane	< 1.36	U, D	µg/l	5.00	1.36	5	"	"	"	"	"	
95-50-1	1,2-Dichlorobenzene	< 1.22	U, D	µg/l	5.00	1.22	5	"	"	"	"	"	
541-73-1	1,3-Dichlorobenzene	< 1.50	U, D	µg/l	5.00	1.50	5	"	"	"	"	"	
106-46-7	1,4-Dichlorobenzene	< 1.36	U, D	µg/l	5.00	1.36	5	"	"	"	"	"	
75-71-8	Dichlorodifluoromethane (Freon12)	< 1.72	U, D	µg/l	10.0	1.72	5	"	"	"	"	"	
75-34-3	1,1-Dichloroethane	< 1.46	U, D	µg/l	5.00	1.46	5	"	"	"	"	"	
107-06-2	1,2-Dichloroethane	< 0.90	U, D	µg/l	5.00	0.90	5	"	"	"	"	"	
75-35-4	1,1-Dichloroethene	< 1.57	U, D	µg/l	2.50	1.57	5	"	"	"	"	"	
156-59-2	cis-1,2-Dichloroethene	< 1.98	U, D	µg/l	5.00	1.98	5	"	"	"	"	"	
156-60-5	trans-1,2-Dichloroethene	< 1.90	U, D	µg/l	5.00	1.90	5	"	"	"	"	"	
78-87-5	1,2-Dichloropropane	< 1.44	U, D	µg/l	5.00	1.44	5	"	"	"	"	"	
142-28-9	1,3-Dichloropropane	< 1.46	U, D	µg/l	5.00	1.46	5	"	"	"	"	"	
594-20-7	2,2-Dichloropropane	< 2.22	U, D	µg/l	5.00	2.22	5	"	"	"	"	"	
563-58-6	1,1-Dichloropropene	< 1.67	U, D	µg/l	5.00	1.67	5	"	"	"	"	"	
10061-01-5	cis-1,3-Dichloropropene	< 1.64	U, D	µg/l	2.50	1.64	5	"	"	"	"	"	
10061-02-6	trans-1,3-Dichloropropene	< 1.53	U, D	µg/l	2.50	1.53	5	"	"	"	"	"	
100-41-4	Ethylbenzene	< 1.58	U, D	µg/l	5.00	1.58	5	"	"	"	"	"	
87-68-3	Hexachlorobutadiene	< 1.29	U, D	µg/l	2.50	1.29	5	"	"	"	"	"	
591-78-6	2-Hexanone (MBK)	< 3.17	U, D	µg/l	10.0	3.17	5	"	"	"	"	"	

Sample Identification	Client Project #	Matrix	Collection Date/Time	Received
MW	2018-136	Ground Water	29-Jun-18 15:19	29-Jun-18
SC48298-01				

CAS No.	*Analyte(s)*	*Result*	*Flag*	*Units*	**RDL*	*MDL*	*Dilution*	*Method Ref.*	*Prepared*	*Analyzed*	*Analyst*	*Batch*	*Cert.*
Volatile Organic Compounds													
Volatile Organic Compounds by SW846 8260			GS1										
98-82-8	Isopropylbenzene	**2.15**	J, D	µg/l	5.00	1.51	5	SW846 8260C	02-Jul-18	02-Jul-18	GMA	1809151	
99-87-6	4-Isopropyltoluene	< 2.10	U, D	µg/l	5.00	2.10	5	"	"	"	"	"	
1634-04-4	Methyl tert-butyl ether	**72.0**	D	µg/l	5.00	1.48	5	"	"	"	"	"	
108-10-1	4-Methyl-2-pentanone (MIBK)	< 1.77	U, D	µg/l	10.0	1.77	5	"	"	"	"	"	
75-09-2	Methylene chloride	< 1.92	U, D	µg/l	2.50	1.92	5	"	"	"	"	"	
91-20-3	Naphthalene	< 6.95	U, D	µg/l	10.0	6.95	5	"	"	"	"	"	
103-65-1	n-Propylbenzene	**5.50**	D	µg/l	5.00	1.60	5	"	"	"	"	"	
100-42-5	Styrene	< 1.64	U, D	µg/l	5.00	1.64	5	"	"	"	"	"	
630-20-6	1,1,1,2-Tetrachloroethane	< 1.58	U, D	µg/l	5.00	1.58	5	"	"	"	"	"	
79-34-5	1,1,2,2-Tetrachloroethane	< 1.28	U, D	µg/l	2.50	1.28	5	"	"	"	"	"	
127-18-4	Tetrachloroethene	**2.20**	J, D	µg/l	5.00	1.56	5	"	"	"	"	"	
108-88-3	Toluene	< 1.45	U, D	µg/l	5.00	1.45	5	"	"	"	"	"	
87-61-6	1,2,3-Trichlorobenzene	< 1.90	U, D	µg/l	5.00	1.90	5	"	"	"	"	"	
120-82-1	1,2,4-Trichlorobenzene	< 1.62	U, D	µg/l	5.00	1.62	5	"	"	"	"	"	
108-70-3	1,3,5-Trichlorobenzene	< 1.95	U, D	µg/l	5.00	1.95	5	"	"	"	"	"	
71-55-6	1,1,1-Trichloroethane	< 1.22	U, D	µg/l	5.00	1.22	5	"	"	"	"	"	
79-00-5	1,1,2-Trichloroethane	< 1.54	U, D	µg/l	5.00	1.54	5	"	"	"	"	"	
79-01-6	Trichloroethene	< 1.78	U, D	µg/l	5.00	1.78	5	"	"	"	"	"	
75-69-4	Trichlorofluoromethane (Freon 11)	< 1.38	U, D	µg/l	5.00	1.38	5	"	"	"	"	"	
96-18-4	1,2,3-Trichloropropane	< 1.30	U, D	µg/l	5.00	1.30	5	"	"	"	"	"	
95-63-6	1,2,4-Trimethylbenzene	< 3.10	U, D	µg/l	5.00	3.10	5	"	"	"	"	"	
108-67-8	1,3,5-Trimethylbenzene	< 2.70	U, D	µg/l	5.00	2.70	5	"	"	"	"	"	
75-01-4	Vinyl chloride	< 2.01	U, D	µg/l	2.50	2.01	5	"	"	"	"	"	
179601-23-1	m,p-Xylene	< 2.37	U, D	µg/l	10.0	2.37	5	"	"	"	"	"	
95-47-6	o-Xylene	< 2.05	U, D	µg/l	5.00	2.05	5	"	"	"	"	"	
109-99-9	Tetrahydrofuran	< 2.49	U, D	µg/l	10.0	2.49	5	"	"	"	"	"	
60-29-7	Ethyl ether	< 1.46	U, D	µg/l	5.00	1.46	5	"	"	"	"	"	
994-05-8	Tert-amyl methyl ether	**8.00**	D	µg/l	5.00	1.49	5	"	"	"	"	"	
637-92-3	Ethyl tert-butyl ether	< 1.45	U, D	µg/l	5.00	1.45	5	"	"	"	"	"	
108-20-3	Di-isopropyl ether	< 1.47	U, D	µg/l	5.00	1.47	5	"	"	"	"	"	
75-65-0	Tert-Butanol / butyl alcohol	**1,640**	D	µg/l	50.0	15.7	5	"	"	"	"	"	
123-91-1	1,4-Dioxane	< 29.0	U, D	µg/l	100	29.0	5	"	"	"	"	"	
110-57-6	trans-1,4-Dichloro-2-buten e	< 3.06	U, D	µg/l	25.0	3.06	5	"	"	"	"	"	
64-17-5	Ethanol	< 66.0	U, D	µg/l	1000	66.0	5	"	"	"	"	"	
Surrogate recoveries:													
460-00-4	*4-Bromofluorobenzene*	*92*			*70-130 %*			"	"	"	"	"	
2037-26-5	*Toluene-d8*	*99*			*70-130 %*			"	"	"	"	"	
17060-07-0	*1,2-Dichloroethane-d4*	*114*			*70-130 %*			"	"	"	"	"	
1868-53-7	*Dibromofluoromethane*	*123*			*70-130 %*			"	"	"	"	"	
Semivolatile Organic Compounds by GCMS													
Semivolatile Organic Compounds Prepared by method SW846 3510C													
83-32-9	Acenaphthene	< 0.646	U	µg/l	0.935	0.646	1	SW846 8270D	03-Jul-18	06-Jul-18	MSL	1809205	

Sample Identification	Client Project #	Matrix	Collection Date/Time	Received
MW	2018-136	Ground Water	29-Jun-18 15:19	29-Jun-18
SC48298-01				

Semivolatile Organic Compounds by GCMS

Semivolatile Organic Compounds

CAS No.	Analyte(s)	Result	Flag	Units	*RDL	MDL	Dilution	Method Ref.	Prepared	Analyzed	Analyst	Batch	Cert.
208-96-8	Acenaphthylene	< 0.638	U	µg/l	0.935	0.638	1	SW846 8270D	03-Jul-18	06-Jul-18	MSL	1809205	
62-53-3	Aniline	< 1.65	U	µg/l	4.67	1.65	1	"	"	"	"	"	
120-12-7	Anthracene	< 0.568	U	µg/l	0.935	0.568	1	"	"	"	"	"	
103-33-3	Azobenzene/Diphenyldiazene	< 0.699	U	µg/l	4.67	0.699	1	"	"	"	"	"	
92-87-5	Benzidine	< 1.07	U	µg/l	9.35	1.07	1	"	"	"	"	"	
56-55-3	Benzo (a) anthracene	**0.757**	J	µg/l	0.935	0.501	1	"	"	"	"	"	
50-32-8	Benzo (a) pyrene	**0.748**	J	µg/l	0.935	0.525	1	"	"	"	"	"	
205-99-2	Benzo (b) fluoranthene	**0.935**		µg/l	0.935	0.408	1	"	"	"	"	"	
191-24-2	Benzo (g,h,i) perylene	**0.495**	J	µg/l	0.935	0.495	1	"	"	"	"	"	
207-08-9	Benzo (k) fluoranthene	**0.907**	J	µg/l	0.935	0.449	1	"	"	"	"	"	
65-85-0	Benzoic acid	< 0.493	U	µg/l	4.67	0.493	1	"	"	"	"	"	
100-51-6	Benzyl alcohol	< 0.729	U	µg/l	4.67	0.729	1	"	"	"	"	"	
111-91-1	Bis(2-chloroethoxy)methane	< 0.622	U	µg/l	4.67	0.622	1	"	"	"	"	"	
111-44-4	Bis(2-chloroethyl)ether	< 0.686	U	µg/l	4.67	0.686	1	"	"	"	"	"	
108-60-1	Bis(2-chloroisopropyl)ether	< 0.727	U	µg/l	4.67	0.727	1	"	"	"	"	"	
117-81-7	Bis(2-ethylhexyl)phthalate	**2.51**	J	µg/l	4.67	0.596	1	"	"	"	"	"	
101-55-3	4-Bromophenyl phenyl ether	< 0.563	U	µg/l	4.67	0.563	1	"	"	"	"	"	
85-68-7	Butyl benzyl phthalate	< 0.409	U	µg/l	4.67	0.409	1	"	"	"	"	"	
86-74-8	Carbazole	< 1.46	U	µg/l	4.67	1.46	1	"	"	"	"	"	
59-50-7	4-Chloro-3-methylphenol	< 0.468	U	µg/l	4.67	0.468	1	"	"	"	"	"	
106-47-8	4-Chloroaniline	< 1.05	U	µg/l	4.67	1.05	1	"	"	"	"	"	
91-58-7	2-Chloronaphthalene	< 0.551	U	µg/l	4.67	0.551	1	"	"	"	"	"	
95-57-8	2-Chlorophenol	< 0.699	U	µg/l	4.67	0.699	1	"	"	"	"	"	
7005-72-3	4-Chlorophenyl phenyl ether	< 0.564	U	µg/l	4.67	0.564	1	"	"	"	"	"	
218-01-9	Chrysene	**0.832**	J	µg/l	0.935	0.497	1	"	"	"	"	"	
53-70-3	Dibenzo (a,h) anthracene	< 0.421	U	µg/l	0.935	0.421	1	"	"	"	"	"	
132-64-9	Dibenzofuran	< 0.692	U	µg/l	4.67	0.692	1	"	"	"	"	"	
95-50-1	1,2-Dichlorobenzene	< 0.525	U	µg/l	4.67	0.525	1	"	"	"	"	"	
541-73-1	1,3-Dichlorobenzene	< 0.605	U	µg/l	4.67	0.605	1	"	"	"	"	"	
106-46-7	1,4-Dichlorobenzene	< 0.574	U	µg/l	4.67	0.574	1	"	"	"	"	"	
91-94-1	3,3´-Dichlorobenzidine	< 1.86	U	µg/l	4.67	1.86	1	"	"	"	"	"	
120-83-2	2,4-Dichlorophenol	< 0.495	U	µg/l	4.67	0.495	1	"	"	"	"	"	
84-66-2	Diethyl phthalate	< 0.582	U	µg/l	4.67	0.582	1	"	"	"	"	"	
131-11-3	Dimethyl phthalate	< 0.708	U	µg/l	4.67	0.708	1	"	"	"	"	"	
105-67-9	2,4-Dimethylphenol	< 0.610	U	µg/l	4.67	0.610	1	"	"	"	"	"	
84-74-2	Di-n-butyl phthalate	< 0.427	U	µg/l	4.67	0.427	1	"	"	"	"	"	
534-52-1	4,6-Dinitro-2-methylphenol	< 0.298	U	µg/l	4.67	0.298	1	"	"	"	"	"	
51-28-5	2,4-Dinitrophenol	< 0.524	U	µg/l	4.67	0.524	1	"	"	"	"	"	
121-14-2	2,4-Dinitrotoluene	< 0.629	U	µg/l	4.67	0.629	1	"	"	"	"	"	
606-20-2	2,6-Dinitrotoluene	< 0.554	U	µg/l	4.67	0.554	1	"	"	"	"	"	
117-84-0	Di-n-octyl phthalate	**0.766**	J	µg/l	4.67	0.379	1	"	"	"	"	"	
206-44-0	Fluoranthene	**1.50**		µg/l	0.935	0.596	1	"	"	"	"	"	

Sample Identification	Client Project #	Matrix	Collection Date/Time	Received
MW	2018-136	Ground Water	29-Jun-18 15:19	29-Jun-18
SC48298-01				

CAS No.	*Analyte(s)*	*Result*	*Flag*	*Units*	**RDL*	*MDL*	*Dilution*	*Method Ref.*	*Prepared*	*Analyzed*	*Analyst*	*Batch*	*Cert.*
Semivolatile Organic Compounds by GCMS													
Semivolatile Organic Compounds													
86-73-7	Fluorene	< 0.572	U	µg/l	0.935	0.572	1	SW846 8270D	03-Jul-18	06-Jul-18	MSL	1809205	
118-74-1	Hexachlorobenzene	< 0.534	U	µg/l	4.67	0.534	1	"	"	"	"	"	
87-68-3	Hexachlorobutadiene	< 0.363	U	µg/l	4.67	0.363	1	"	"	"	"	"	
77-47-4	Hexachlorocyclopentadiene	< 0.968	U	µg/l	4.67	0.968	1	"	"	"	"	"	
67-72-1	Hexachloroethane	< 0.597	U	µg/l	4.67	0.597	1	"	"	"	"	"	
193-39-5	Indeno (1,2,3-cd) pyrene	< 0.542	U	µg/l	0.935	0.542	1	"	"	"	"	"	
78-59-1	Isophorone	< 0.548	U	µg/l	4.67	0.548	1	"	"	"	"	"	
91-57-6	2-Methylnaphthalene	< 0.536	U	µg/l	0.935	0.536	1	"	"	"	"	"	
95-48-7	2-Methylphenol	< 0.621	U	µg/l	4.67	0.621	1	"	"	"	"	"	
108-39-4, 106-44-5	3 & 4-Methylphenol	< 0.575	U	µg/l	9.35	0.575	1	"	"	"	"	"	
91-20-3	Naphthalene	< 0.640	U	µg/l	0.935	0.640	1	"	"	"	"	"	
88-74-4	2-Nitroaniline	< 0.566	U	µg/l	4.67	0.566	1	"	"	"	"	"	
99-09-2	3-Nitroaniline	< 0.507	U	µg/l	4.67	0.507	1	"	"	"	"	"	
100-01-6	4-Nitroaniline	< 0.350	U	µg/l	4.67	0.350	1	"	"	"	"	"	
98-95-3	Nitrobenzene	< 0.645	U	µg/l	4.67	0.645	1	"	"	"	"	"	
88-75-5	2-Nitrophenol	< 0.435	U	µg/l	4.67	0.435	1	"	"	"	"	"	
100-02-7	4-Nitrophenol	< 0.783	U	µg/l	18.7	0.783	1	"	"	"	"	"	
62-75-9	N-Nitrosodimethylamine	< 0.629	U	µg/l	4.67	0.629	1	"	"	"	"	"	
621-64-7	N-Nitrosodi-n-propylamine	< 0.540	U	µg/l	4.67	0.540	1	"	"	"	"	"	
86-30-6	N-Nitrosodiphenylamine	< 0.608	U	µg/l	4.67	0.608	1	"	"	"	"	"	
87-86-5	Pentachlorophenol	< 0.349	U	µg/l	0.935	0.349	1	"	"	"	"	"	
85-01-8	Phenanthrene	< 0.548	U	µg/l	0.935	0.548	1	"	"	"	"	"	
108-95-2	Phenol	< 0.603	U	µg/l	4.67	0.603	1	"	"	"	"	"	
129-00-0	Pyrene	**1.08**		µg/l	0.935	0.570	1	"	"	"	"	"	
110-86-1	Pyridine	< 0.765	U	µg/l	4.67	0.765	1	"	"	"	"	"	
120-82-1	1,2,4-Trichlorobenzene	< 0.642	U	µg/l	4.67	0.642	1	"	"	"	"	"	
90-12-0	1-Methylnaphthalene	**1.08**		µg/l	0.935	0.685	1	"	"	"	"	"	
95-95-4	2,4,5-Trichlorophenol	< 0.486	U	µg/l	4.67	0.486	1	"	"	"	"	"	
88-06-2	2,4,6-Trichlorophenol	< 0.484	U	µg/l	4.67	0.484	1	"	"	"	"	"	
82-68-8	Pentachloronitrobenzene	< 0.650	U	µg/l	4.67	0.650	1	"	"	"	"	"	
95-94-3	1,2,4,5-Tetrachlorobenzene	< 0.678	U	µg/l	4.67	0.678	1	"	"	"	"	"	
Surrogate recoveries:													
321-60-8	*2-Fluorobiphenyl*	*23*	Z-2		*30-130 %*			"	"	"	"	"	
367-12-4	*2-Fluorophenol*	*19*			*15-110 %*			"	"	"	"	"	
4165-60-0	*Nitrobenzene-d5*	*22*	Z-2		*30-130 %*			"	"	"	"	"	
4165-62-2	*Phenol-d5*	*13*	Z-2		*15-110 %*			"	"	"	"	"	
1718-51-0	*Terphenyl-dl4*	*14*	Z-2		*30-130 %*			"	"	"	"	"	
118-79-6	*2,4,6-Tribromophenol*	*31*			*15-110 %*			"	"	"	"	"	
Extractable Petroleum Hydrocarbons													
Fingerprinting by GC Prepared by method SW846 3510C													
8006-61-9	Gasoline	< 0.2		mg/l	0.2	0.2	1	SW846 8100Mod.	03-Jul-18	05-Jul-18	DJS	1809204	
68476-30-2	Fuel Oil #2	< 0.2		mg/l	0.2	0.2	1	"	"	"	"	"	

Sample Identification	Client Project #	Matrix	Collection Date/Time	Received
MW SC48298-01	2018-136	Ground Water	29-Jun-18 15:19	29-Jun-18

CAS No.	Analyte(s)	Result	Flag	Units	*RDL	MDL	Dilution	Method Ref.	Prepared	Analyzed	Analyst	Batch	Cert.
Extractable Petroleum Hydrocarbons													
Fingerprinting by GC													
68476-31-3	Fuel Oil #4	< 0.2		mg/l	0.2	0.2	1	SW846 8100Mod.	03-Jul-18	05-Jul-18	DJS	1809204	
68553-00-4	Fuel Oil #6	< 0.2		mg/l	0.2	0.2	1	"	"	"	"	"	
M09800000	Motor Oil	< 0.2		mg/l	0.2	0.2	1	"	"	"	"	"	
8032-32-4	Ligroin	< 0.2		mg/l	0.2	0.2	1	"	"	"	"	"	
J00100000	Aviation Fuel	< 0.2		mg/l	0.2	0.2	1	"	"	"	"	"	
	Hydraulic Oil	< 0.2		mg/l	0.2	0.2	1	"	"	"	"	"	
	Dielectric Fluid	< 0.2		mg/l	0.2	0.2	1	"	"	"	"	"	
	Unidentified	**1.7**		mg/l	0.2	0.2	1	"	"	"	"	"	
	Other Oil	**Calculated as**		mg/l	0.2	0.2	1	"	"	"	"	"	
	Total Petroleum Hydrocarbons	**1.7**		mg/l	0.2	0.2	1	"	"	"	"	"	
Surrogate recoveries:													
3386-33-2	*1-Chlorooctadecane*	*54*			*40-140 %*			"	"	"	"	"	
Total Metals by EPA 200/6000 Series Methods													
Prepared by method General Prep-Metal													
	Preservation	**Field Preserved; pH<2 confirmed**		N/A			1	EPA 200/6000 methods	02-Jul-18		KP1	1809166	
Total Metals by EPA 6000/7000 Series Methods													
Prepared by method SW846 3005A													
7440-22-4	Silver	< 0.0050		mg/l	0.0050	0.0006	1	SW846 6010C	03-Jul-18	06-Jul-18	SJR/TBC	1809252	
7440-38-2	Arsenic	**0.07830**		mg/l	0.00400	0.00138	1	"	"	09-Jul-18	"	"	
7440-70-2	Calcium	**74.4**		mg/l	0.100	0.0071	1	"	"	06-Jul-18	"	"	
7440-43-9	Cadmium	**0.0206**	R06	mg/l	0.0055	0.0004	1	"	"	"	"	"	
7440-47-3	Chromium	**0.220**		mg/l	0.0050	0.0009	1	"	"	"	"	"	
7440-50-8	Copper	**0.915**		mg/l	0.0050	0.0023	1	"	"	09-Jul-18	"	"	
7439-89-6	Iron	**161**		mg/l	0.125	0.0045	1	"	"	06-Jul-18	"	"	
7439-95-4	Magnesium	**86.0**	GS1, D	mg/l	0.100	0.0221	5	"	"	06-Jul-18	"	"	
7440-02-0	Nickel	**0.125**	R06	mg/l	0.0115	0.0009	1	"	"	06-Jul-18	"	"	
7439-92-1	Lead	**0.164**		mg/l	0.0075	0.0062	1	"	"	"	"	"	
7440-36-0	Antimony	< 0.0300	R01, D	mg/l	0.0300	0.0080	5	"	"	06-Jul-18	"	"	
7782-49-2	Selenium	< 0.0150		mg/l	0.0150	0.0042	1	"	"	06-Jul-18	"	"	
7440-66-6	Zinc	**9.06**	GS1, D	mg/l	0.125	0.0079	5	"	"	06-Jul-18	"	"	
Total Metals by EPA 200 Series Methods													
7439-97-6	Mercury	**0.00033**		mg/l	0.00020	0.00014	1	EPA 245.1/7470A	03-Jul-18	05-Jul-18	ABW	1809253	X
General Chemistry Parameters													
16065-83-1	Trivalent Chromium	**0.220**		mg/l	0.0100	0.0053	1	Calculation	03-Jul-18	06-Jul-18	SJR/TBC	1809252	
Prepared by method [CALC]													
	Hardness	**540**	HD	mg/l CaCO3	0.662	0.109	5	SM 2340B (11)	"	06-Jul-18	TBC	[CALC]	
7782-50-5	Total Residual Chlorine	< 0.020	ClHT	mg/l	0.020	0.006	1	SM4500-Cl-G (11)	06-Jul-18 08:52	06-Jul-18 10:24	RLT	1809365	X
16887-00-6	Chloride	**130**	GS1, D	mg/l	5.00	0.497	5	EPA 300.0	03-Jul-18	04-Jul-18	TN	1809269	X
18540-29-9	Hexavalent Chromium	< 0.050	R01, D	mg/l	0.050	0.021	10	SM3500-Cr-B (11)/7196A	29-Jun-18 17:18	29-Jun-18 17:36	RLT	1809121	

Sample Identification	Client Project #	Matrix	Collection Date/Time	Received
MW SC48298-01	2018-136	Ground Water	29-Jun-18 15:19	29-Jun-18

CAS No.	*Analyte(s)*	*Result*	*Flag*	*Units*	**RDL*	*MDL*	*Dilution*	*Method Ref.*	*Prepared*	*Analyzed*	*Analyst*	*Batch*	*Cert.*
General Chemistry Parameters													
57-12-5	Cyanide (total)	< 0.00500		mg/l	0.00500	0.00470	1	EPA 335.4 / SW846 9012B	06-Jul-18	06-Jul-18	RLT	1809392	X
	Total Dissolved Solids	**486**	LIV	mg/l	10	6	1	SM18-22 2540C	03-Jul-18	05-Jul-18	CMB	1809237	X
	Total Suspended Solids	**1,140**	LIV	mg/l	20.0	8.6	1	SM2540D (11)	03-Jul-18	05-Jul-18	CMB	1809238	X
Subcontracted Analyses													
Prepared by method 437147													
*Analysis performed by Phoenix Environmental Labs, Inc. * - MACT007*													
7664-41-7	Ammonia as Nitrogen	< 2.50		mg/l	2.50	2.50	50	E350.1	29-Jun-18 15:19	03-Jul-18 11:02	M-CT007	437147A	

Analyte(s)	Result	Flag	Units	*RDL	Spike Level	Source Result	%REC	%REC Limits	RPD	RPD Limit
SW846 8260C										
Batch 1809151 - SW846 5030 Water MS										
Blank (1809151-BLK1)					Prepared & Analyzed: 02-Jul-18					
1,1,2-Trichlorotrifluoroethane (Freon 113)	< 0.58	U	µg/l	0.58						
Acetone	< 3.76	U	µg/l	3.76						
Acrylonitrile	< 0.48	U	µg/l	0.48						
Benzene	< 0.34	U	µg/l	0.34						
Bromobenzene	< 0.28	U	µg/l	0.28						
Bromochloromethane	< 0.34	U	µg/l	0.34						
Bromodichloromethane	< 0.29	U	µg/l	0.29						
Bromoform	< 0.24	U	µg/l	0.24						
Bromomethane	< 0.45	U	µg/l	0.45						
2-Butanone (MEK)	< 0.70	U	µg/l	0.70						
n-Butylbenzene	< 0.47	U	µg/l	0.47						
sec-Butylbenzene	< 0.31	U	µg/l	0.31						
tert-Butylbenzene	< 0.30	U	µg/l	0.30						
Carbon disulfide	< 0.70	U	µg/l	0.70						
Carbon tetrachloride	< 0.39	U	µg/l	0.39						
Chlorobenzene	< 0.30	U	µg/l	0.30						
Chloroethane	< 0.40	U	µg/l	0.40						
Chloroform	**0.33**	O01, J	µg/l	0.29						
Chloromethane	< 0.36	U	µg/l	0.36						
2-Chlorotoluene	< 0.31	U	µg/l	0.31						
4-Chlorotoluene	< 0.29	U	µg/l	0.29						
1,2-Dibromo-3-chloropropane	< 0.47	U	µg/l	0.47						
Dibromochloromethane	< 0.29	U	µg/l	0.29						
1,2-Dibromoethane (EDB)	< 0.30	U	µg/l	0.30						
Dibromomethane	< 0.27	U	µg/l	0.27						
1,2-Dichlorobenzene	< 0.24	U	µg/l	0.24						
1,3-Dichlorobenzene	< 0.30	U	µg/l	0.30						
1,4-Dichlorobenzene	< 0.27	U	µg/l	0.27						
Dichlorodifluoromethane (Freon12)	< 0.34	U	µg/l	0.34						
1,1-Dichloroethane	< 0.29	U	µg/l	0.29						
1,2-Dichloroethane	< 0.18	U	µg/l	0.18						
1,1-Dichloroethene	< 0.31	U	µg/l	0.31						
cis-1,2-Dichloroethene	< 0.40	U	µg/l	0.40						
trans-1,2-Dichloroethene	< 0.38	U	µg/l	0.38						
1,2-Dichloropropane	< 0.29	U	µg/l	0.29						
1,3-Dichloropropane	< 0.29	U	µg/l	0.29						
2,2-Dichloropropane	< 0.44	U	µg/l	0.44						
1,1-Dichloropropene	< 0.33	U	µg/l	0.33						
cis-1,3-Dichloropropene	< 0.33	U	µg/l	0.33						
trans-1,3-Dichloropropene	< 0.31	U	µg/l	0.31						
Ethylbenzene	< 0.32	U	µg/l	0.32						
Hexachlorobutadiene	< 0.26	U	µg/l	0.26						
2-Hexanone (MBK)	< 0.63	U	µg/l	0.63						
Isopropylbenzene	< 0.30	U	µg/l	0.30						
4-Isopropyltoluene	< 0.42	U	µg/l	0.42						
Methyl tert-butyl ether	< 0.30	U	µg/l	0.30						
4-Methyl-2-pentanone (MIBK)	< 0.35	U	µg/l	0.35						
Methylene chloride	< 0.38	U	µg/l	0.38						
Naphthalene	< 1.39	U	µg/l	1.39						
n-Propylbenzene	< 0.32	U	µg/l	0.32						

Analyte(s)	Result	Flag	Units	*RDL	Spike Level	Source Result	%REC	%REC Limits	RPD	RPD Limit
SW846 8260C										
Batch 1809151 - SW846 5030 Water MS										
Blank (1809151-BLK1)					Prepared & Analyzed: 02-Jul-18					
Styrene	< 0.33	U	µg/l	0.33						
1,1,1,2-Tetrachloroethane	< 0.32	U	µg/l	0.32						
1,1,2,2-Tetrachloroethane	< 0.26	U	µg/l	0.26						
Tetrachloroethene	< 0.31	U	µg/l	0.31						
Toluene	< 0.29	U	µg/l	0.29						
1,2,3-Trichlorobenzene	< 0.38	U	µg/l	0.38						
1,2,4-Trichlorobenzene	< 0.32	U	µg/l	0.32						
1,3,5-Trichlorobenzene	< 0.39	U	µg/l	0.39						
1,1,1-Trichloroethane	< 0.24	U	µg/l	0.24						
1,1,2-Trichloroethane	< 0.31	U	µg/l	0.31						
Trichloroethene	< 0.36	U	µg/l	0.36						
Trichlorofluoromethane (Freon 11)	< 0.28	U	µg/l	0.28						
1,2,3-Trichloropropane	< 0.26	U	µg/l	0.26						
1,2,4-Trimethylbenzene	< 0.62	U	µg/l	0.62						
1,3,5-Trimethylbenzene	< 0.54	U	µg/l	0.54						
Vinyl chloride	< 0.40	U	µg/l	0.40						
m,p-Xylene	< 0.47	U	µg/l	0.47						
o-Xylene	< 0.41	U	µg/l	0.41						
Tetrahydrofuran	< 0.50	U	µg/l	0.50						
Ethyl ether	< 0.29	U	µg/l	0.29						
Tert-amyl methyl ether	< 0.30	U	µg/l	0.30						
Ethyl tert-butyl ether	< 0.29	U	µg/l	0.29						
Di-isopropyl ether	< 0.29	U	µg/l	0.29						
Tert-Butanol / butyl alcohol	< 3.13	U	µg/l	3.13						
1,4-Dioxane	< 5.81	U	µg/l	5.81						
trans-1,4-Dichloro-2-butene	< 0.61	U	µg/l	0.61						
Ethanol	< 13.2	U	µg/l	13.2						
Surrogate: 4-Bromofluorobenzene	*47.4*		µg/l		*50.0*		*95*	*70-130*		
Surrogate: Toluene-d8	*47.4*		µg/l		*50.0*		*95*	*70-130*		
Surrogate: 1,2-Dichloroethane-d4	*53.2*		µg/l		*50.0*		*106*	*70-130*		
Surrogate: Dibromofluoromethane	*58.7*		µg/l		*50.0*		*117*	*70-130*		
LCS (1809151-BS1)					Prepared & Analyzed: 02-Jul-18					
1,1,2-Trichlorotrifluoroethane (Freon 113)	**21.9**		µg/l		20.0		109	70-130		
Acetone	**24.5**		µg/l		20.0		122	70-130		
Acrylonitrile	**20.7**		µg/l		20.0		103	70-130		
Benzene	**19.0**		µg/l		20.0		95	70-130		
Bromobenzene	**21.0**		µg/l		20.0		105	70-130		
Bromochloromethane	**21.3**		µg/l		20.0		107	70-130		
Bromodichloromethane	**20.1**		µg/l		20.0		100	70-130		
Bromoform	**23.9**		µg/l		20.0		120	70-130		
Bromomethane	**18.1**		µg/l		20.0		90	70-130		
2-Butanone (MEK)	**22.6**		µg/l		20.0		113	70-130		
n-Butylbenzene	**20.0**		µg/l		20.0		100	70-130		
sec-Butylbenzene	**20.5**		µg/l		20.0		102	70-130		
tert-Butylbenzene	**20.4**		µg/l		20.0		102	70-130		
Carbon disulfide	**22.3**		µg/l		20.0		111	70-130		
Carbon tetrachloride	**21.3**		µg/l		20.0		106	70-130		
Chlorobenzene	**19.4**		µg/l		20.0		97	70-130		
Chloroethane	**21.7**		µg/l		20.0		108	70-130		
Chloroform	**21.0**		µg/l		20.0		105	70-130		

Analyte(s)	Result	Flag	Units	*RDL	Spike Level	Source Result	%REC	%REC Limits	RPD	RPD Limit
SW846 8260C										
Batch 1809151 - SW846 5030 Water MS										
LCS (1809151-BS1)					Prepared & Analyzed: 02-Jul-18					
Chloromethane	**14.2**		µg/l		20.0		71	70-130		
2-Chlorotoluene	**18.6**		µg/l		20.0		93	70-130		
4-Chlorotoluene	**20.0**		µg/l		20.0		100	70-130		
1,2-Dibromo-3-chloropropane	**23.0**		µg/l		20.0		115	70-130		
Dibromochloromethane	**21.8**		µg/l		20.0		109	70-130		
1,2-Dibromoethane (EDB)	**20.5**		µg/l		20.0		103	70-130		
Dibromomethane	**18.7**		µg/l		20.0		94	70-130		
1,2-Dichlorobenzene	**21.3**		µg/l		20.0		107	70-130		
1,3-Dichlorobenzene	**22.9**		µg/l		20.0		115	70-130		
1,4-Dichlorobenzene	**19.7**		µg/l		20.0		99	70-130		
Dichlorodifluoromethane (Freon12)	**19.7**		µg/l		20.0		99	70-130		
1,1-Dichloroethane	**22.0**		µg/l		20.0		110	70-130		
1,2-Dichloroethane	**18.9**		µg/l		20.0		95	70-130		
1,1-Dichloroethene	**23.0**		µg/l		20.0		115	70-130		
cis-1,2-Dichloroethene	**21.0**		µg/l		20.0		105	70-130		
trans-1,2-Dichloroethene	**21.5**		µg/l		20.0		108	70-130		
1,2-Dichloropropane	**17.1**		µg/l		20.0		86	70-130		
1,3-Dichloropropane	**17.8**		µg/l		20.0		89	70-130		
2,2-Dichloropropane	**27.5**	QM9	µg/l		20.0		138	70-130		
1,1-Dichloropropene	**18.4**		µg/l		20.0		92	70-130		
cis-1,3-Dichloropropene	**19.7**		µg/l		20.0		99	70-130		
trans-1,3-Dichloropropene	**21.2**		µg/l		20.0		106	70-130		
Ethylbenzene	**19.6**		µg/l		20.0		98	70-130		
Hexachlorobutadiene	**22.7**		µg/l		20.0		114	70-130		
2-Hexanone (MBK)	**18.5**		µg/l		20.0		92	70-130		
Isopropylbenzene	**22.3**		µg/l		20.0		111	70-130		
4-Isopropyltoluene	**19.8**		µg/l		20.0		99	70-130		
Methyl tert-butyl ether	**23.8**		µg/l		20.0		119	70-130		
4-Methyl-2-pentanone (MIBK)	**18.4**		µg/l		20.0		92	70-130		
Methylene chloride	**20.1**		µg/l		20.0		101	70-130		
Naphthalene	**19.9**		µg/l		20.0		100	70-130		
n-Propylbenzene	**19.8**		µg/l		20.0		99	70-130		
Styrene	**19.6**		µg/l		20.0		98	70-130		
1,1,1,2-Tetrachloroethane	**23.3**		µg/l		20.0		116	70-130		
1,1,2,2-Tetrachloroethane	**19.2**		µg/l		20.0		96	70-130		
Tetrachloroethene	**19.8**		µg/l		20.0		99	70-130		
Toluene	**18.5**		µg/l		20.0		92	70-130		
1,2,3-Trichlorobenzene	**21.8**		µg/l		20.0		109	70-130		
1,2,4-Trichlorobenzene	**21.0**		µg/l		20.0		105	70-130		
1,3,5-Trichlorobenzene	**21.8**		µg/l		20.0		109	70-130		
1,1,1-Trichloroethane	**20.6**		µg/l		20.0		103	70-130		
1,1,2-Trichloroethane	**18.4**		µg/l		20.0		92	70-130		
Trichloroethene	**19.5**		µg/l		20.0		98	70-130		
Trichlorofluoromethane (Freon 11)	**23.6**		µg/l		20.0		118	70-130		
1,2,3-Trichloropropane	**20.7**		µg/l		20.0		103	70-130		
1,2,4-Trimethylbenzene	**20.8**		µg/l		20.0		104	70-130		
1,3,5-Trimethylbenzene	**20.0**		µg/l		20.0		100	70-130		
Vinyl chloride	**24.1**		µg/l		20.0		120	70-130		
m,p-Xylene	**19.6**		µg/l		20.0		98	70-130		
o-Xylene	**20.2**		µg/l		20.0		101	70-130		

Analyte(s)	Result	Flag	Units	*RDL	Spike Level	Source Result	%REC	%REC Limits	RPD	RPD Limit
SW846 8260C										
Batch 1809151 - SW846 5030 Water MS										
LCS (1809151-BS1)					Prepared & Analyzed: 02-Jul-18					
Tetrahydrofuran	**16.2**		µg/l		20.0		81	70-130		
Ethyl ether	**20.3**		µg/l		20.0		102	70-130		
Tert-amyl methyl ether	**16.3**		µg/l		20.0		82	70-130		
Ethyl tert-butyl ether	**24.8**		µg/l		20.0		124	70-130		
Di-isopropyl ether	**21.6**		µg/l		20.0		108	70-130		
Tert-Butanol / butyl alcohol	**255**		µg/l		200		127	70-130		
1,4-Dioxane	**192**		µg/l		200		96	70-130		
trans-1,4-Dichloro-2-butene	**20.5**		µg/l		20.0		103	70-130		
Ethanol	**525**	QM9	µg/l		400		131	70-130		
Surrogate: 4-Bromofluorobenzene	*51.3*		µg/l		*50.0*		*103*	*70-130*		
Surrogate: Toluene-d8	*49.9*		µg/l		*50.0*		*100*	*70-130*		
Surrogate: 1,2-Dichloroethane-d4	*51.9*		µg/l		*50.0*		*104*	*70-130*		
Surrogate: Dibromofluoromethane	*58.5*		µg/l		*50.0*		*117*	*70-130*		
LCS Dup (1809151-BSD1)					Prepared & Analyzed: 02-Jul-18					
1,1,2-Trichlorotrifluoroethane (Freon 113)	**20.2**		µg/l		20.0		101	70-130	8	20
Acetone	**23.3**		µg/l		20.0		116	70-130	5	20
Acrylonitrile	**20.2**		µg/l		20.0		101	70-130	3	20
Benzene	**17.7**		µg/l		20.0		89	70-130	7	20
Bromobenzene	**21.4**		µg/l		20.0		107	70-130	2	20
Bromochloromethane	**20.1**		µg/l		20.0		101	70-130	6	20
Bromodichloromethane	**18.8**		µg/l		20.0		94	70-130	7	20
Bromoform	**23.4**		µg/l		20.0		117	70-130	2	20
Bromomethane	**14.9**		µg/l		20.0		75	70-130	19	20
2-Butanone (MEK)	**22.1**		µg/l		20.0		111	70-130	2	20
n-Butylbenzene	**18.0**		µg/l		20.0		90	70-130	11	20
sec-Butylbenzene	**19.1**		µg/l		20.0		95	70-130	7	20
tert-Butylbenzene	**19.8**		µg/l		20.0		99	70-130	3	20
Carbon disulfide	**19.9**		µg/l		20.0		100	70-130	11	20
Carbon tetrachloride	**18.8**		µg/l		20.0		94	70-130	12	20
Chlorobenzene	**18.7**		µg/l		20.0		94	70-130	3	20
Chloroethane	**19.3**		µg/l		20.0		97	70-130	11	20
Chloroform	**19.4**		µg/l		20.0		97	70-130	8	20
Chloromethane	**13.3**		µg/l		20.0		66	70-130	7	20
2-Chlorotoluene	**18.3**		µg/l		20.0		92	70-130	1	20
4-Chlorotoluene	**19.1**		µg/l		20.0		96	70-130	4	20
1,2-Dibromo-3-chloropropane	**22.9**		µg/l		20.0		114	70-130	0.7	20
Dibromochloromethane	**20.8**		µg/l		20.0		104	70-130	5	20
1,2-Dibromoethane (EDB)	**19.9**		µg/l		20.0		100	70-130	3	20
Dibromomethane	**18.0**		µg/l		20.0		90	70-130	4	20
1,2-Dichlorobenzene	**20.0**		µg/l		20.0		100	70-130	7	20
1,3-Dichlorobenzene	**22.4**		µg/l		20.0		112	70-130	2	20
1,4-Dichlorobenzene	**18.5**		µg/l		20.0		92	70-130	7	20
Dichlorodifluoromethane (Freon12)	**18.2**		µg/l		20.0		91	70-130	8	20
1,1-Dichloroethane	**20.0**		µg/l		20.0		100	70-130	10	20
1,2-Dichloroethane	**18.7**		µg/l		20.0		94	70-130	1	20
1,1-Dichloroethene	**21.1**		µg/l		20.0		106	70-130	9	20
cis-1,2-Dichloroethene	**20.1**		µg/l		20.0		100	70-130	4	20
trans-1,2-Dichloroethene	**20.1**		µg/l		20.0		101	70-130	7	20
1,2-Dichloropropane	**16.4**		µg/l		20.0		82	70-130	4	20
1,3-Dichloropropane	**17.6**		µg/l		20.0		88	70-130	1	20

Analyte(s)	Result	Flag	Units	*RDL	Spike Level	Source Result	%REC	%REC Limits	RPD	RPD Limit
SW846 8260C										
Batch 1809151 - SW846 5030 Water MS										
LCS Dup (1809151-BSD1)					Prepared & Analyzed: 02-Jul-18					
2,2-Dichloropropane	**24.3**		µg/l		20.0		122	70-130	12	20
1,1-Dichloropropene	**17.0**		µg/l		20.0		85	70-130	8	20
cis-1,3-Dichloropropene	**18.5**		µg/l		20.0		92	70-130	6	20
trans-1,3-Dichloropropene	**20.7**		µg/l		20.0		104	70-130	3	20
Ethylbenzene	**18.3**		µg/l		20.0		92	70-130	7	20
Hexachlorobutadiene	**21.8**		µg/l		20.0		109	70-130	4	20
2-Hexanone (MBK)	**19.7**		µg/l		20.0		98	70-130	6	20
Isopropylbenzene	**21.1**		µg/l		20.0		105	70-130	6	20
4-Isopropyltoluene	**18.4**		µg/l		20.0		92	70-130	8	20
Methyl tert-butyl ether	**23.9**		µg/l		20.0		120	70-130	0.7	20
4-Methyl-2-pentanone (MIBK)	**19.1**		µg/l		20.0		95	70-130	4	20
Methylene chloride	**19.5**		µg/l		20.0		98	70-130	3	20
Naphthalene	**19.6**		µg/l		20.0		98	70-130	1	20
n-Propylbenzene	**18.5**		µg/l		20.0		93	70-130	7	20
Styrene	**19.3**		µg/l		20.0		96	70-130	2	20
1,1,1,2-Tetrachloroethane	**22.3**		µg/l		20.0		112	70-130	4	20
1,1,2,2-Tetrachloroethane	**19.8**		µg/l		20.0		99	70-130	3	20
Tetrachloroethene	**18.1**		µg/l		20.0		91	70-130	9	20
Toluene	**17.4**		µg/l		20.0		87	70-130	6	20
1,2,3-Trichlorobenzene	**20.5**		µg/l		20.0		102	70-130	6	20
1,2,4-Trichlorobenzene	**19.9**		µg/l		20.0		99	70-130	6	20
1,3,5-Trichlorobenzene	**19.9**		µg/l		20.0		100	70-130	9	20
1,1,1-Trichloroethane	**18.6**		µg/l		20.0		93	70-130	10	20
1,1,2-Trichloroethane	**17.6**		µg/l		20.0		88	70-130	4	20
Trichloroethene	**18.0**		µg/l		20.0		90	70-130	8	20
Trichlorofluoromethane (Freon 11)	**21.2**		µg/l		20.0		106	70-130	10	20
1,2,3-Trichloropropane	**21.2**		µg/l		20.0		106	70-130	2	20
1,2,4-Trimethylbenzene	**19.0**		µg/l		20.0		95	70-130	9	20
1,3,5-Trimethylbenzene	**18.8**		µg/l		20.0		94	70-130	6	20
Vinyl chloride	**24.0**		µg/l		20.0		120	70-130	0.4	20
m,p-Xylene	**18.9**		µg/l		20.0		95	70-130	3	20
o-Xylene	**19.2**		µg/l		20.0		96	70-130	5	20
Tetrahydrofuran	**18.5**		µg/l		20.0		92	70-130	13	20
Ethyl ether	**20.0**		µg/l		20.0		100	70-130	1	20
Tert-amyl methyl ether	**16.4**		µg/l		20.0		82	70-130	0.5	20
Ethyl tert-butyl ether	**24.4**		µg/l		20.0		122	70-130	2	20
Di-isopropyl ether	**20.5**		µg/l		20.0		103	70-130	5	20
Tert-Butanol / butyl alcohol	**255**		µg/l		200		128	70-130	0.2	20
1,4-Dioxane	**163**		µg/l		200		82	70-130	16	20
trans-1,4-Dichloro-2-butene	**20.3**		µg/l		20.0		102	70-130	1	20
Ethanol	**447**		µg/l		400		112	70-130	16	20
Surrogate: 4-Bromofluorobenzene	*53.5*		µg/l		*50.0*		*107*	*70-130*		
Surrogate: Toluene-d8	*48.7*		µg/l		*50.0*		*97*	*70-130*		
Surrogate: 1,2-Dichloroethane-d4	*51.6*		µg/l		*50.0*		*103*	*70-130*		
Surrogate: Dibromofluoromethane	*58.7*		µg/l		*50.0*		*117*	*70-130*		

Analyte(s)	Result	Flag	Units	*RDL	Spike Level	Source Result	%REC	%REC Limits	RPD	RPD Limit
SW846 8270D										
Batch 1809205 - SW846 3510C										
Blank (1809205-BLK1)					Prepared: 03-Jul-18 Analyzed: 05-Jul-18					
Acenaphthene	< 0.684	U	µg/l	0.684						
Acenaphthylene	< 0.676	U	µg/l	0.676						
Aniline	< 1.75	U	µg/l	1.75						
Anthracene	< 0.602	U	µg/l	0.602						
Azobenzene/Diphenyldiazene	< 0.741	U	µg/l	0.741						
Benzidine	< 1.14	U	µg/l	1.14						
Benzo (a) anthracene	< 0.531	U	µg/l	0.531						
Benzo (a) pyrene	< 0.556	U	µg/l	0.556						
Benzo (b) fluoranthene	< 0.433	U	µg/l	0.433						
Benzo (g,h,i) perylene	< 0.525	U	µg/l	0.525						
Benzo (k) fluoranthene	< 0.475	U	µg/l	0.475						
Benzoic acid	< 0.522	U	µg/l	0.522						
Benzyl alcohol	< 0.772	U	µg/l	0.772						
Bis(2-chloroethoxy)methane	< 0.659	U	µg/l	0.659						
Bis(2-chloroethyl)ether	< 0.727	U	µg/l	0.727						
Bis(2-chloroisopropyl)ether	< 0.770	U	µg/l	0.770						
Bis(2-ethylhexyl)phthalate	< 0.632	U	µg/l	0.632						
4-Bromophenyl phenyl ether	< 0.596	U	µg/l	0.596						
Butyl benzyl phthalate	< 0.434	U	µg/l	0.434						
Carbazole	< 1.54	U	µg/l	1.54						
4-Chloro-3-methylphenol	< 0.496	U	µg/l	0.496						
4-Chloroaniline	< 1.11	U	µg/l	1.11						
2-Chloronaphthalene	< 0.584	U	µg/l	0.584						
2-Chlorophenol	< 0.741	U	µg/l	0.741						
4-Chlorophenyl phenyl ether	< 0.597	U	µg/l	0.597						
Chrysene	< 0.527	U	µg/l	0.527						
Dibenzo (a,h) anthracene	< 0.446	U	µg/l	0.446						
Dibenzofuran	< 0.733	U	µg/l	0.733						
1,2-Dichlorobenzene	< 0.556	U	µg/l	0.556						
1,3-Dichlorobenzene	< 0.641	U	µg/l	0.641						
1,4-Dichlorobenzene	< 0.608	U	µg/l	0.608						
3,3´-Dichlorobenzidine	< 1.97	U	µg/l	1.97						
2,4-Dichlorophenol	< 0.525	U	µg/l	0.525						
Diethyl phthalate	< 0.617	U	µg/l	0.617						
Dimethyl phthalate	< 0.750	U	µg/l	0.750						
2,4-Dimethylphenol	< 0.647	U	µg/l	0.647						
Di-n-butyl phthalate	< 0.452	U	µg/l	0.452						
4,6-Dinitro-2-methylphenol	< 0.316	U	µg/l	0.316						
2,4-Dinitrophenol	< 0.555	U	µg/l	0.555						
2,4-Dinitrotoluene	< 0.666	U	µg/l	0.666						
2,6-Dinitrotoluene	< 0.587	U	µg/l	0.587						
Di-n-octyl phthalate	< 0.402	U	µg/l	0.402						
Fluoranthene	< 0.632	U	µg/l	0.632						
Fluorene	< 0.606	U	µg/l	0.606						
Hexachlorobenzene	< 0.565	U	µg/l	0.565						
Hexachlorobutadiene	< 0.384	U	µg/l	0.384						
Hexachlorocyclopentadiene	< 1.03	U	µg/l	1.03						
Hexachloroethane	< 0.633	U	µg/l	0.633						
Indeno (1,2,3-cd) pyrene	< 0.574	U	µg/l	0.574						
Isophorone	< 0.580	U	µg/l	0.580						

Analyte(s)	Result	Flag	Units	*RDL	Spike Level	Source Result	%REC	%REC Limits	RPD	RPD Limit
SW846 8270D										
Batch 1809205 - SW846 3510C										
Blank (1809205-BLK1)					Prepared: 03-Jul-18 Analyzed: 05-Jul-18					
2-Methylnaphthalene	< 0.568	U	µg/l	0.568						
2-Methylphenol	< 0.658	U	µg/l	0.658						
3 & 4-Methylphenol	< 0.609	U	µg/l	0.609						
Naphthalene	< 0.678	U	µg/l	0.678						
2-Nitroaniline	< 0.600	U	µg/l	0.600						
3-Nitroaniline	< 0.538	U	µg/l	0.538						
4-Nitroaniline	< 0.370	U	µg/l	0.370						
Nitrobenzene	< 0.683	U	µg/l	0.683						
2-Nitrophenol	< 0.460	U	µg/l	0.460						
4-Nitrophenol	< 0.830	U	µg/l	0.830						
N-Nitrosodimethylamine	< 0.666	U	µg/l	0.666						
N-Nitrosodi-n-propylamine	< 0.572	U	µg/l	0.572						
N-Nitrosodiphenylamine	< 0.645	U	µg/l	0.645						
Pentachlorophenol	< 0.369	U	µg/l	0.369						
Phenanthrene	< 0.580	U	µg/l	0.580						
Phenol	< 0.639	U	µg/l	0.639						
Pyrene	< 0.604	U	µg/l	0.604						
Pyridine	< 0.811	U	µg/l	0.811						
1,2,4-Trichlorobenzene	< 0.680	U	µg/l	0.680						
1-Methylnaphthalene	< 0.726	U	µg/l	0.726						
2,4,5-Trichlorophenol	< 0.515	U	µg/l	0.515						
2,4,6-Trichlorophenol	< 0.513	U	µg/l	0.513						
Pentachloronitrobenzene	< 0.689	U	µg/l	0.689						
1,2,4,5-Tetrachlorobenzene	< 0.718	U	µg/l	0.718						
Surrogate: 2-Fluorobiphenyl	*21.2*		µg/l		*49.5*		*43*	*30-130*		
Surrogate: 2-Fluorophenol	*15.7*		µg/l		*49.5*		*32*	*15-110*		
Surrogate: Nitrobenzene-d5	*20.8*		µg/l		*49.5*		*42*	*30-130*		
Surrogate: Phenol-d5	*10.1*		µg/l		*49.5*		*20*	*15-110*		
Surrogate: Terphenyl-dl4	*29.8*		µg/l		*49.5*		*60*	*30-130*		
Surrogate: 2,4,6-Tribromophenol	*26.1*		µg/l		*49.5*		*53*	*15-110*		
LCS (1809205-BS1)					Prepared: 03-Jul-18 Analyzed: 05-Jul-18					
Acenaphthene	**31.8**		µg/l	0.671	48.5		66	40-140		
Acenaphthylene	**31.3**		µg/l	0.663	48.5		64	40-140		
Aniline	**25.7**		µg/l	1.72	48.5		53	40-140		
Anthracene	**29.9**		µg/l	0.590	48.5		62	40-140		
Azobenzene/Diphenyldiazene	**33.7**		µg/l	0.726	48.5		69	40-140		
Benzidine	**80.6**	QC2	µg/l	1.11	48.5		166	40-140		
Benzo (a) anthracene	**31.8**		µg/l	0.520	48.5		66	40-140		
Benzo (a) pyrene	**29.7**		µg/l	0.546	48.5		61	40-140		
Benzo (b) fluoranthene	**30.1**		µg/l	0.424	48.5		62	40-140		
Benzo (g,h,i) perylene	**31.1**		µg/l	0.515	48.5		64	40-140		
Benzo (k) fluoranthene	**30.8**		µg/l	0.466	48.5		63	40-140		
Benzoic acid	**13.2**	QC6	µg/l	0.512	48.5		27	30-130		
Benzyl alcohol	**27.6**		µg/l	0.757	48.5		57	40-140		
Bis(2-chloroethoxy)methane	**21.8**		µg/l	0.647	48.5		45	40-140		
Bis(2-chloroethyl)ether	**23.1**		µg/l	0.713	48.5		48	40-140		
Bis(2-chloroisopropyl)ether	**24.7**		µg/l	0.755	48.5		51	40-140		
Bis(2-ethylhexyl)phthalate	**31.8**		µg/l	0.619	48.5		65	40-140		
4-Bromophenyl phenyl ether	**28.7**		µg/l	0.584	48.5		59	40-140		
Butyl benzyl phthalate	**30.1**		µg/l	0.425	48.5		62	40-140		

Analyte(s)	Result	Flag	Units	*RDL	Spike Level	Source Result	%REC	%REC Limits	RPD	RPD Limit
SW846 8270D										
Batch 1809205 - SW846 3510C										
LCS (1809205-BS1)					Prepared: 03-Jul-18 Analyzed: 05-Jul-18					
Carbazole	**37.8**		µg/l	1.51	48.5		78	40-140		
4-Chloro-3-methylphenol	**30.3**		µg/l	0.486	48.5		63	30-130		
4-Chloroaniline	**35.5**		µg/l	1.09	48.5		73	40-140		
2-Chloronaphthalene	**37.3**		µg/l	0.573	48.5		77	40-140		
2-Chlorophenol	**27.3**		µg/l	0.726	48.5		56	30-130		
4-Chlorophenyl phenyl ether	**34.9**		µg/l	0.585	48.5		72	40-140		
Chrysene	**35.4**		µg/l	0.517	48.5		73	40-140		
Dibenzo (a,h) anthracene	**33.2**		µg/l	0.437	48.5		68	40-140		
Dibenzofuran	**35.4**		µg/l	0.718	48.5		73	40-140		
1,2-Dichlorobenzene	**28.6**		µg/l	0.546	48.5		59	40-140		
1,3-Dichlorobenzene	**27.1**		µg/l	0.628	48.5		56	40-140		
1,4-Dichlorobenzene	**29.7**		µg/l	0.596	48.5		61	40-140		
3,3´-Dichlorobenzidine	**43.9**		µg/l	1.93	48.5		90	40-140		
2,4-Dichlorophenol	**28.7**		µg/l	0.515	48.5		59	30-130		
Diethyl phthalate	**34.7**		µg/l	0.605	48.5		72	40-140		
Dimethyl phthalate	**30.5**		µg/l	0.736	48.5		63	40-140		
2,4-Dimethylphenol	**26.1**		µg/l	0.634	48.5		54	30-130		
Di-n-butyl phthalate	**29.2**		µg/l	0.444	48.5		60	40-140		
4,6-Dinitro-2-methylphenol	**24.8**		µg/l	0.310	48.5		51	30-130		
2,4-Dinitrophenol	**19.3**		µg/l	0.545	48.5		40	30-130		
2,4-Dinitrotoluene	**35.4**		µg/l	0.653	48.5		73	40-140		
2,6-Dinitrotoluene	**35.8**		µg/l	0.576	48.5		74	40-140		
Di-n-octyl phthalate	**29.6**		µg/l	0.394	48.5		61	40-140		
Fluoranthene	**30.2**		µg/l	0.619	48.5		62	40-140		
Fluorene	**29.4**		µg/l	0.594	48.5		61	40-140		
Hexachlorobenzene	**37.4**		µg/l	0.554	48.5		77	40-140		
Hexachlorobutadiene	**30.4**		µg/l	0.377	48.5		63	40-140		
Hexachlorocyclopentadiene	**42.8**		µg/l	1.01	48.5		88	40-140		
Hexachloroethane	**31.0**		µg/l	0.620	48.5		64	40-140		
Indeno (1,2,3-cd) pyrene	**30.7**		µg/l	0.563	48.5		63	40-140		
Isophorone	**26.4**		µg/l	0.569	48.5		54	40-140		
2-Methylnaphthalene	**33.5**		µg/l	0.557	48.5		69	40-140		
2-Methylphenol	**27.4**		µg/l	0.646	48.5		56	30-130		
3 & 4-Methylphenol	**26.2**		µg/l	0.597	48.5		54	30-130		
Naphthalene	**26.5**		µg/l	0.665	48.5		55	40-140		
2-Nitroaniline	**29.2**		µg/l	0.588	48.5		60	40-140		
3-Nitroaniline	**33.1**		µg/l	0.527	48.5		68	40-140		
4-Nitroaniline	**39.2**		µg/l	0.363	48.5		81	40-140		
Nitrobenzene	**33.5**		µg/l	0.670	48.5		69	40-140		
2-Nitrophenol	**24.5**		µg/l	0.451	48.5		50	30-130		
4-Nitrophenol	**14.0**	QC6, J	µg/l	0.814	48.5		29	30-130		
N-Nitrosodimethylamine	**22.3**		µg/l	0.653	48.5		46	40-140		
N-Nitrosodi-n-propylamine	**28.6**		µg/l	0.561	48.5		59	40-140		
N-Nitrosodiphenylamine	**34.9**		µg/l	0.632	48.5		72	40-140		
Pentachlorophenol	**16.6**	J	µg/l	0.362	48.5		34	30-130		
Phenanthrene	**31.2**		µg/l	0.569	48.5		64	40-140		
Phenol	**13.2**	QC6	µg/l	0.626	48.5		27	30-130		
Pyrene	**31.2**		µg/l	0.592	48.5		64	40-140		
Pyridine	**19.9**		µg/l	0.795	48.5		41	40-140		
1,2,4-Trichlorobenzene	**31.7**		µg/l	0.667	48.5		65	40-140		

Analyte(s)	Result	Flag	Units	*RDL	Spike Level	Source Result	%REC	%REC Limits	RPD	RPD Limit
SW846 8270D										
Batch 1809205 - SW846 3510C										
LCS (1809205-BS1)					Prepared: 03-Jul-18 Analyzed: 05-Jul-18					
1-Methylnaphthalene	**29.2**		µg/l	0.712	48.5		60	40-140		
2,4,5-Trichlorophenol	**30.3**		µg/l	0.505	48.5		62	30-130		
2,4,6-Trichlorophenol	**32.5**		µg/l	0.503	48.5		67	30-130		
Pentachloronitrobenzene	**40.7**		µg/l	0.676	48.5		84	40-140		
1,2,4,5-Tetrachlorobenzene	**30.1**		µg/l	0.704	48.5		62	40-140		
Surrogate: 2-Fluorobiphenyl	*30.8*		µg/l		*48.5*		*64*	*30-130*		
Surrogate: 2-Fluorophenol	*18.6*		µg/l		*48.5*		*38*	*15-110*		
Surrogate: Nitrobenzene-d5	*30.7*		µg/l		*48.5*		*63*	*30-130*		
Surrogate: Phenol-d5	*16.7*		µg/l		*48.5*		*34*	*15-110*		
Surrogate: Terphenyl-dl4	*36.5*		µg/l		*48.5*		*75*	*30-130*		
Surrogate: 2,4,6-Tribromophenol	*34.8*		µg/l		*48.5*		*72*	*15-110*		
LCS Dup (1809205-BSD1)					Prepared: 03-Jul-18 Analyzed: 05-Jul-18					
Acenaphthene	**33.3**		µg/l	0.691	50.0		67	40-140	4	20
Acenaphthylene	**32.0**		µg/l	0.683	50.0		64	40-140	2	20
Aniline	**26.2**		µg/l	1.77	50.0		52	40-140	2	20
Anthracene	**31.6**		µg/l	0.608	50.0		63	40-140	6	20
Azobenzene/Diphenyldiazene	**35.6**		µg/l	0.748	50.0		71	40-140	6	20
Benzidine	**71.4**	QC2	µg/l	1.15	50.0		143	40-140	12	20
Benzo (a) anthracene	**33.4**		µg/l	0.536	50.0		67	40-140	5	20
Benzo (a) pyrene	**31.3**		µg/l	0.562	50.0		63	40-140	5	20
Benzo (b) fluoranthene	**32.1**		µg/l	0.437	50.0		64	40-140	7	20
Benzo (g,h,i) perylene	**32.7**		µg/l	0.530	50.0		65	40-140	5	20
Benzo (k) fluoranthene	**32.5**		µg/l	0.480	50.0		65	40-140	6	20
Benzoic acid	**13.6**	QC6	µg/l	0.527	50.0		27	30-130	3	20
Benzyl alcohol	**28.5**		µg/l	0.780	50.0		57	40-140	3	20
Bis(2-chloroethoxy)methane	**22.8**		µg/l	0.666	50.0		46	40-140	5	20
Bis(2-chloroethyl)ether	**23.4**		µg/l	0.734	50.0		47	40-140	1	20
Bis(2-chloroisopropyl)ether	**25.7**		µg/l	0.778	50.0		51	40-140	4	20
Bis(2-ethylhexyl)phthalate	**32.5**		µg/l	0.638	50.0		65	40-140	2	20
4-Bromophenyl phenyl ether	**30.4**		µg/l	0.602	50.0		61	40-140	6	20
Butyl benzyl phthalate	**31.2**		µg/l	0.438	50.0		62	40-140	4	20
Carbazole	**41.1**		µg/l	1.56	50.0		82	40-140	8	20
4-Chloro-3-methylphenol	**32.5**		µg/l	0.501	50.0		65	30-130	7	20
4-Chloroaniline	**37.6**		µg/l	1.12	50.0		75	40-140	6	20
2-Chloronaphthalene	**38.4**		µg/l	0.590	50.0		77	40-140	3	20
2-Chlorophenol	**28.5**		µg/l	0.748	50.0		57	30-130	4	20
4-Chlorophenyl phenyl ether	**36.6**		µg/l	0.603	50.0		73	40-140	5	20
Chrysene	**36.2**		µg/l	0.532	50.0		72	40-140	2	20
Dibenzo (a,h) anthracene	**34.8**		µg/l	0.450	50.0		70	40-140	5	20
Dibenzofuran	**36.2**		µg/l	0.740	50.0		72	40-140	2	20
1,2-Dichlorobenzene	**29.7**		µg/l	0.562	50.0		59	40-140	4	20
1,3-Dichlorobenzene	**28.0**		µg/l	0.647	50.0		56	40-140	3	20
1,4-Dichlorobenzene	**30.3**		µg/l	0.614	50.0		61	40-140	2	20
3,3´-Dichlorobenzidine	**44.1**		µg/l	1.99	50.0		88	40-140	0.6	20
2,4-Dichlorophenol	**30.1**		µg/l	0.530	50.0		60	30-130	5	20
Diethyl phthalate	**36.5**		µg/l	0.623	50.0		73	40-140	5	20
Dimethyl phthalate	**31.4**		µg/l	0.758	50.0		63	40-140	3	20
2,4-Dimethylphenol	**27.9**		µg/l	0.653	50.0		56	30-130	7	20
Di-n-butyl phthalate	**30.4**		µg/l	0.457	50.0		61	40-140	4	20
4,6-Dinitro-2-methylphenol	**25.4**		µg/l	0.319	50.0		51	30-130	2	20

Analyte(s)	Result	Flag	Units	*RDL	Spike Level	Source Result	%REC	%REC Limits	RPD	RPD Limit
SW846 8270D										
Batch 1809205 - SW846 3510C										
LCS Dup (1809205-BSD1)					Prepared: 03-Jul-18 Analyzed: 05-Jul-18					
2,4-Dinitrophenol	**20.1**		µg/l	0.561	50.0		40	30-130	4	20
2,4-Dinitrotoluene	**37.6**		µg/l	0.673	50.0		75	40-140	6	20
2,6-Dinitrotoluene	**36.4**		µg/l	0.593	50.0		73	40-140	2	20
Di-n-octyl phthalate	**30.4**		µg/l	0.406	50.0		61	40-140	2	20
Fluoranthene	**32.1**		µg/l	0.638	50.0		64	40-140	6	20
Fluorene	**31.2**		µg/l	0.612	50.0		62	40-140	6	20
Hexachlorobenzene	**39.4**		µg/l	0.571	50.0		79	40-140	5	20
Hexachlorobutadiene	**31.6**		µg/l	0.388	50.0		63	40-140	4	20
Hexachlorocyclopentadiene	**42.7**		µg/l	1.04	50.0		85	40-140	0.3	20
Hexachloroethane	**32.2**		µg/l	0.639	50.0		64	40-140	4	20
Indeno (1,2,3-cd) pyrene	**31.4**		µg/l	0.580	50.0		63	40-140	2	20
Isophorone	**27.6**		µg/l	0.586	50.0		55	40-140	4	20
2-Methylnaphthalene	**35.2**		µg/l	0.574	50.0		70	40-140	5	20
2-Methylphenol	**28.3**		µg/l	0.665	50.0		57	30-130	3	20
3 & 4-Methylphenol	**26.8**		µg/l	0.615	50.0		54	30-130	2	20
Naphthalene	**27.7**		µg/l	0.685	50.0		55	40-140	4	20
2-Nitroaniline	**30.5**		µg/l	0.606	50.0		61	40-140	4	20
3-Nitroaniline	**33.4**		µg/l	0.543	50.0		67	40-140	0.9	20
4-Nitroaniline	**41.4**		µg/l	0.374	50.0		83	40-140	6	20
Nitrobenzene	**36.0**		µg/l	0.690	50.0		72	40-140	7	20
2-Nitrophenol	**26.2**		µg/l	0.465	50.0		52	30-130	7	20
4-Nitrophenol	**15.1**	J	µg/l	0.838	50.0		30	30-130	7	20
N-Nitrosodimethylamine	**23.2**		µg/l	0.673	50.0		46	40-140	4	20
N-Nitrosodi-n-propylamine	**29.6**		µg/l	0.578	50.0		59	40-140	3	20
N-Nitrosodiphenylamine	**37.3**		µg/l	0.651	50.0		75	40-140	6	20
Pentachlorophenol	**17.8**	J	µg/l	0.373	50.0		36	30-130	7	20
Phenanthrene	**32.9**		µg/l	0.586	50.0		66	40-140	5	20
Phenol	**13.1**	QC6	µg/l	0.645	50.0		26	30-130	0.3	20
Pyrene	**32.1**		µg/l	0.610	50.0		64	40-140	3	20
Pyridine	**20.6**		µg/l	0.819	50.0		41	40-140	3	20
1,2,4-Trichlorobenzene	**32.5**		µg/l	0.687	50.0		65	40-140	3	20
1-Methylnaphthalene	**30.2**		µg/l	0.733	50.0		60	40-140	4	20
2,4,5-Trichlorophenol	**31.8**		µg/l	0.520	50.0		64	30-130	5	20
2,4,6-Trichlorophenol	**33.8**		µg/l	0.518	50.0		68	30-130	4	20
Pentachloronitrobenzene	**43.0**		µg/l	0.696	50.0		86	40-140	5	20
1,2,4,5-Tetrachlorobenzene	**31.0**		µg/l	0.725	50.0		62	40-140	3	20
Surrogate: 2-Fluorobiphenyl	*31.5*		µg/l		*50.0*		*63*	*30-130*		
Surrogate: 2-Fluorophenol	*18.6*		µg/l		*50.0*		*37*	*15-110*		
Surrogate: Nitrobenzene-d5	*32.0*		µg/l		*50.0*		*64*	*30-130*		
Surrogate: Phenol-d5	*16.7*		µg/l		*50.0*		*33*	*15-110*		
Surrogate: Terphenyl-dl4	*37.0*		µg/l		*50.0*		*74*	*30-130*		
Surrogate: 2,4,6-Tribromophenol	*36.4*		µg/l		*50.0*		*73*	*15-110*		

Extractable Petroleum Hydrocarbons - Quality Control

Analyte(s)	Result	Flag	Units	*RDL	Spike Level	Source Result	%REC	%REC Limits	RPD	RPD Limit
SW846 8100Mod.										
Batch 1809204 - SW846 3510C										
Blank (1809204-BLK1)					Prepared: 03-Jul-18 Analyzed: 05-Jul-18					
Gasoline	< 0.2		mg/l	0.2						
Fuel Oil #2	< 0.2		mg/l	0.2						
Fuel Oil #4	< 0.2		mg/l	0.2						
Fuel Oil #6	< 0.2		mg/l	0.2						
Motor Oil	< 0.2		mg/l	0.2						
Ligroin	< 0.2		mg/l	0.2						
Aviation Fuel	< 0.2		mg/l	0.2						
Hydraulic Oil	< 0.2		mg/l	0.2						
Dielectric Fluid	< 0.2		mg/l	0.2						
Unidentified	< 0.2		mg/l	0.2						
Other Oil	< 0.2		mg/l	0.2						
Total Petroleum Hydrocarbons	< 0.2		mg/l	0.2						
Surrogate: 1-Chlorooctadecane	*0.0410*		mg/l		*0.0500*		*82*	*40-140*		
LCS (1809204-BS2)					Prepared: 03-Jul-18 Analyzed: 05-Jul-18					
Fuel Oil #2	**2.7**		mg/l	0.2	2.00		136	40-140		
Surrogate: 1-Chlorooctadecane	*0.0533*		mg/l		*0.0500*		*107*	*40-140*		
LCS Dup (1809204-BSD2)					Prepared: 03-Jul-18 Analyzed: 06-Jul-18					
Fuel Oil #2	**2.3**		mg/l	0.2	2.00		117	40-140	15	30
Surrogate: 1-Chlorooctadecane	*0.0394*		mg/l		*0.0500*		*79*	*40-140*		

Analyte(s)	Result	Flag	Units	*RDL	Spike Level	Source Result	%REC	%REC Limits	RPD	RPD Limit
SW846 6010C										
Batch 1809252 - SW846 3005A										
Blank (1809252-BLK1)					Prepared: 03-Jul-18 Analyzed: 06-Jul-18					
Iron	< 0.125		mg/l	0.125						
Arsenic	< 0.00400		mg/l	0.00400						
Chromium	< 0.0050		mg/l	0.0050						
Magnesium	< 0.0200		mg/l	0.0200						
Zinc	< 0.0250		mg/l	0.0250						
Selenium	< 0.0150		mg/l	0.0150						
Antimony	< 0.0060		mg/l	0.0060						
Lead	< 0.0075		mg/l	0.0075						
Copper	< 0.0050		mg/l	0.0050						
Cadmium	< 0.0025		mg/l	0.0025						
Calcium	< 0.100		mg/l	0.100						
Silver	< 0.0050		mg/l	0.0050						
Nickel	< 0.0050		mg/l	0.0050						
LCS (1809252-BS1)					Prepared: 03-Jul-18 Analyzed: 06-Jul-18					
Iron	**1.35**		mg/l	0.125	1.25		108	85-115		
Zinc	**1.31**		mg/l	0.0250	1.25		105	85-115		
Nickel	**1.39**		mg/l	0.0050	1.25		111	85-115		
Chromium	**1.28**		mg/l	0.0050	1.25		103	85-115		
Lead	**1.39**		mg/l	0.0075	1.25		111	85-115		
Antimony	**1.42**		mg/l	0.0060	1.25		113	85-115		
Selenium	**1.45**	QC2	mg/l	0.0150	1.25		116	85-115		
Magnesium	**1.40**		mg/l	0.0200	1.25		112	85-115		
Copper	**1.44**		mg/l	0.0050	1.25		115	85-115		
Cadmium	**1.32**		mg/l	0.0025	1.25		105	85-115		
Calcium	**6.10**		mg/l	0.100	6.25		98	85-115		
Arsenic	**1.392**		mg/l	0.00400	1.25		111	85-115		
Silver	**1.34**		mg/l	0.0050	1.25		107	85-115		
LCS Dup (1809252-BSD1)					Prepared: 03-Jul-18 Analyzed: 06-Jul-18					
Iron	**1.31**		mg/l	0.125	1.25		105	85-115	4	20
Arsenic	**1.398**		mg/l	0.00400	1.25		112	85-115	0.4	20
Silver	**1.33**		mg/l	0.0050	1.25		106	85-115	0.8	20
Zinc	**1.31**		mg/l	0.0250	1.25		105	85-115	0	20
Cadmium	**1.32**		mg/l	0.0025	1.25		106	85-115	0.08	20
Calcium	**6.09**		mg/l	0.100	6.25		97	85-115	0.2	20
Copper	**1.42**		mg/l	0.0050	1.25		114	85-115	1	20
Lead	**1.39**		mg/l	0.0075	1.25		111	85-115	0.4	20
Selenium	**1.45**	QC2	mg/l	0.0150	1.25		116	85-115	0.1	20
Chromium	**1.27**		mg/l	0.0050	1.25		101	85-115	1	20
Magnesium	**1.40**		mg/l	0.0200	1.25		112	85-115	0.4	20
Nickel	**1.39**		mg/l	0.0050	1.25		111	85-115	0.04	20
Antimony	**1.42**		mg/l	0.0060	1.25		114	85-115	0.6	20

Analyte(s)	Result	Flag	Units	*RDL	Spike Level	Source Result	%REC	%REC Limits	RPD	RPD Limit
EPA 245.1/7470A										
Batch 1809253 - EPA200/SW7000 Series										
Blank (1809253-BLK1)					Prepared: 03-Jul-18 Analyzed: 05-Jul-18					
Mercury	< 0.00020		mg/l	0.00020						
LCS (1809253-BS1)					Prepared: 03-Jul-18 Analyzed: 05-Jul-18					
Mercury	**0.00475**		mg/l	0.00020	0.00500		95	85-115		
Duplicate (1809253-DUP1)			**Source: SC48298-01**		Prepared: 03-Jul-18 Analyzed: 05-Jul-18					
Mercury	**0.00043**	QR6	mg/l	0.00020		0.00033			25	20
Matrix Spike (1809253-MS1)			**Source: SC48298-01**		Prepared: 03-Jul-18 Analyzed: 05-Jul-18					
Mercury	**0.00517**		mg/l	0.00020	0.00500	0.00033	97	80-120		
Matrix Spike Dup (1809253-MSD1)			**Source: SC48298-01**		Prepared: 03-Jul-18 Analyzed: 05-Jul-18					
Mercury	**0.00498**		mg/l	0.00020	0.00500	0.00033	93	80-120	4	20
Post Spike (1809253-PS1)			**Source: SC48298-01**		Prepared: 03-Jul-18 Analyzed: 05-Jul-18					
Mercury	**0.00592**		mg/l	0.00020	0.00500	0.00033	112	85-115		

Analyte(s)	Result	Flag	Units	*RDL	Spike Level	Source Result	%REC	%REC Limits	RPD	RPD Limit
EPA 300.0										
Batch 1809269 - General Preparation										
Blank (1809269-BLK1)					Prepared: 03-Jul-18 Analyzed: 04-Jul-18					
Chloride	< 1.00		mg/l	1.00						
LCS (1809269-BS1)					Prepared: 03-Jul-18 Analyzed: 04-Jul-18					
Chloride	**19.4**		mg/l	1.00	20.0		97	90-110		
Reference (1809269-SRM1)					Prepared: 03-Jul-18 Analyzed: 04-Jul-18					
Chloride	**24.2**		mg/l	1.00	25.0		97	90-110		
EPA 335.4 / SW846 9012B										
Batch 1809392 - General Preparation										
Blank (1809392-BLK1)					Prepared & Analyzed: 06-Jul-18					
Cyanide (total)	< 0.00500		mg/l	0.00500						
Blank (1809392-BLK2)					Prepared & Analyzed: 06-Jul-18					
Cyanide (total)	< 0.00500		mg/l	0.00500						
LCS (1809392-BS1)					Prepared & Analyzed: 06-Jul-18					
Cyanide (total)	**0.218**	QC3	mg/l	0.00500	0.250		87	90-110		
LCS (1809392-BS2)					Prepared & Analyzed: 06-Jul-18					
Cyanide (total)	**0.249**		mg/l	0.00500	0.250		100	90-110		
Duplicate (1809392-DUP1)			**Source: SC48298-01**		Prepared & Analyzed: 06-Jul-18					
Cyanide (total)	< 0.00500		mg/l	0.00500		BRL				20
Matrix Spike (1809392-MS1)			**Source: SC48298-01**		Prepared & Analyzed: 06-Jul-18					
Cyanide (total)	**0.239**		mg/l	0.00500	0.250	BRL	96	90-110		
Matrix Spike Dup (1809392-MSD1)			**Source: SC48298-01**		Prepared & Analyzed: 06-Jul-18					
Cyanide (total)	**0.248**		mg/l	0.00500	0.250	BRL	99	90-110	4	20
Reference (1809392-SRM1)					Prepared & Analyzed: 06-Jul-18					
Cyanide (total)	**0.375**		mg/l	0.00500	0.347		108	76-122		
SM18-22 2540C										
Batch 1809237 - General Preparation										
Blank (1809237-BLK1)					Prepared: 03-Jul-18 Analyzed: 05-Jul-18					
Total Dissolved Solids	< 5		mg/l	5						
LCS (1809237-BS1)					Prepared: 03-Jul-18 Analyzed: 05-Jul-18					
Total Dissolved Solids	**1020**		mg/l	10	1000		102	90-110		
SM2540D (11)										
Batch 1809238 - General Preparation										
Blank (1809238-BLK1)					Prepared: 03-Jul-18 Analyzed: 05-Jul-18					
Total Suspended Solids	< 0.5		mg/l	0.5						
LCS (1809238-BS1)					Prepared: 03-Jul-18 Analyzed: 05-Jul-18					
Total Suspended Solids	**96.0**		mg/l	10.0	100		96	90-110		
SM3500-Cr-B (11)/7196A										
Batch 1809121 - General Preparation										
Blank (1809121-BLK1)					Prepared & Analyzed: 29-Jun-18					
Hexavalent Chromium	< 0.005		mg/l	0.005						
LCS (1809121-BS1)					Prepared & Analyzed: 29-Jun-18					
Hexavalent Chromium	**0.049**		mg/l	0.005	0.0500		97	90-111		
Reference (1809121-SRM1)					Prepared & Analyzed: 29-Jun-18					
Hexavalent Chromium	**0.025**		mg/l	0.005	0.0250		101	85-115		
SM4500-Cl-G (11)										
Batch 1809365 - General Preparation										
Blank (1809365-BLK1)					Prepared & Analyzed: 06-Jul-18					
Total Residual Chlorine	< 0.020		mg/l	0.020						

Analyte(s)	Result	Flag	Units	*RDL	Spike Level	Source Result	%REC	%REC Limits	RPD	RPD Limit
SM4500-Cl-G (11)										
Batch 1809365 - General Preparation										
LCS (1809365-BS1)					Prepared & Analyzed: 06-Jul-18					
Total Residual Chlorine	**0.047**		mg/l	0.020	0.0500		94	90-110		
Reference (1809365-SRM1)					Prepared & Analyzed: 06-Jul-18					
Total Residual Chlorine	**0.098**		mg/l	0.020	0.0910		108	96-115		

Subcontracted Analyses - Quality Control

Analyte(s)	Result	Flag	Units	*RDL	Spike Level	Source Result	%REC	%REC Limits	RPD	RPD Limit
E350.1										
Batch 437147A - 437147										
BLK (CA81150-BLK)						Prepared: 02-Jul-18 Analyzed: 03-Jul-18				
Ammonia as Nitrogen	< 0.05		mg/l	0.05				-		
DUP (CA81150-DUP)			**Source: CA81150**			Prepared: 02-Jul-18 Analyzed: 03-Jul-18				
Ammonia as Nitrogen	**6.05**		mg/l	0.05				-	1.8	20
LCS (CA81150-LCS)						Prepared: 02-Jul-18 Analyzed: 03-Jul-18				
Ammonia as Nitrogen	**3.690**		mg/l	0.05	3.74		98.7	90-110		20
MS (CA81150-MS)			**Source: CA81150**			Prepared: 02-Jul-18 Analyzed: 03-Jul-18				
Ammonia as Nitrogen	**7.920**		mg/l	0.05	2		99.0	90-110		20

Notes and Definitions

D	Data reported from a dilution
GS1	Sample dilution required for high concentration of target analytes to be within the instrument calibration range.
J	Detected above the Method Detection Limit but below the Reporting Limit; therefore, result is an estimated concentration (CLP J-Flag).
O01	This compound is a common laboratory contaminant.
QC2	Analyte out of acceptance range in QC spike but no reportable concentration present in sample.
QC3	The spike recovery is outside acceptable limits for the LCS. The batch was accepted based upon the MS and/or MSD meeting the LCS limits criteria.
QC6	Analyte is out of acceptance range in the QC spike but the total number of out of range analytes is within overall method criteria.
QM9	The spike recovery for this QC sample is outside the established control limits. The sample results for the QC batch were accepted based on LCS/LCSD or SRM recoveries within the control limits.
QR6	The RPD exceeded the QC control limits; however precision is demonstrated with acceptable RPD values for MS/MSD.
R01	The Reporting Limit has been raised to account for matrix interference.
R06	MRL raised to correlate to batch QC reporting limits.
U	Analyte included in the analysis, but not detected at or above the MDL.
Z-2	Surrogates are outside of acceptance critiera but no extra volume is available for re-extraction confirmation.
dry	Sample results reported on a dry weight basis
NR	Not Reported
RPD	Relative Percent Difference
ClHT	The method for residual chlorine indicates that samples should be analyzed immediately. 40 CFR 136 specifies a holding time of 15 minutes from sampling to analysis. Therefore all aqueous residual chlorine samples not analyzed in the field are considered out of hold time at the time of sample receipt.
LIV	The initial volume for this sample has been reduced due to sample matrix and/or historical data therefore elevating the reporting limit.
HD	Total Hardness is a calculation based on the reported values of Ca and Mg.

Interpretation of Total Petroleum Hydrocarbon Report

Petroleum identification is determined by comparing the GC fingerprint obtained from the sample with a library of GC fingerprints obtained from analyses of various petroleum products. Possible match categories are as follows:

Gasoline - includes regular, unleaded, premium, etc.
Fuel Oil #2 - includes home heating oil, #2 fuel oil, and diesel
Fuel Oil #4 - includes #4 fuel oil
Fuel Oil #6 - includes #6 fuel oil and bunker "C" oil
Motor Oil - includes virgin and waste automobile oil
Ligroin - includes mineral spirits, petroleum naphtha, vm&p naphtha
Aviation Fuel - includes kerosene, Jet A and JP-4
Other Oil - includes lubricating and cutting oil, and silicon oil

At times, the unidentified petroleum product is quantified using a calibration that most closely approximates the distribution of compounds in the sample. When this occurs, the result is qualified as Calculated as.

Laboratory Control Sample (LCS): A known matrix spiked with compound(s) representative of the target analytes, which is used to document laboratory performance.

Matrix Duplicate: An intra-laboratory split sample which is used to document the precision of a method in a given sample matrix.

Matrix Spike: An aliquot of a sample spiked with a known concentration of target analyte(s). The spiking occurs prior to sample preparation and analysis. A matrix spike is used to document the bias of a method in a given sample matrix.

Method Blank: An analyte-free matrix to which all reagents are added in the same volumes or proportions as used in sample processing. The method blank should be carried through the complete sample preparation and analytical procedure. The method blank is used to document contamination resulting from the analytical process.

Method Detection Limit (MDL): The minimum concentration of a substance that can be measured and reported with 99% confidence that the analyte concentration is greater than zero and is determined from analysis of a sample in a given matrix type containing the analyte.

Reportable Detection Limit (RDL): The lowest concentration that can be reliably achieved within specified limits of precision and accuracy during routine laboratory operating conditions. For many analytes the RDL analyte concentration is selected as the lowest non-zero standard in the calibration curve. While the RDL is approximately 5 to 10 times the MDL, the RDL for each sample takes into account the sample volume/weight, extract/digestate volume, cleanup procedures and, if applicable, dry weight correction. Sample RDLs are highly matrix-dependent.

Surrogate: An organic compound which is similar to the target analyte(s) in chemical composition and behavior in the analytical process, but which is not normally found in environmental samples. These compounds are spiked into all blanks, standards, and samples prior to analysis. Percent recoveries are calculated for each surrogate.

Continuing Calibration Verification: The calibration relationship established during the initial calibration must be verified at periodic intervals. Concentrations, intervals, and criteria are method specific.

SC 48298

eurofins | Spectrum Analytical

CHAIN OF CUSTODY RECORD

Page 1 of 1

Special Handling:

- [ ] Standard TAT - 7 to 10 business days
- [x] Rush TAT - Date Needed: 7/6/18

All TATs subject to laboratory approval
Min. 24-hr notification needed for rushes
Samples disposed after 30 days unless otherwise instructed.

Report To: CMG ENVIRONMENTAL INC
67 NAN Rd
STURBRIDGE MA 01566
Telephone #: 774-241-8901
Project Mgr: Jason C. Magnuson

Invoice To: SAME
P.O No.: Quote #:

Project No: 2018-136
Site Name: 399 N.H. ST.
Location: AMHERST State: MA
Sampler(s): J. Clark

F=Field Filtered 1=$Na_2S_2O_3$ 2=HCl 3=H_2SO_4 4=HNO_3 5=NaOH 6=Ascorbic Acid
7=CH3OH 8=$NaHSO_4$ 9=Deionized Water 10=H_3PO_4 11= 12=

List Preservative Code below:

QA/QC Reporting Notes:
* additional charges may apply

DW=Drinking Water GW=Groundwater SW=Surface Water WW=Waste Water
O=Oil SO=Soil SL=Sludge A=Indoor/Ambient Air SG=Soil Gas
X1= X2= X3=

G= Grab C=Compsite

Lab ID:	Sample ID:	Date:	Time:	Type	Matrix	# of VOA Vials	# of Amber Glass	# of Clear Glass	# of Plastic	8100 TDS	AMMONIA CHLORIDE	TOTAL RESIDUAL CHLORINE	B, CYANIDE	FULL 8260	ANTIMONY, AL	Cd, Cr, Pb, Hg	CU, Fe, Mn, Na, SELENIUM	SILVER ZINC	8270 FULL SVOCs	Check if chlorinated	QA/QC Reporting Notes
48298-01	MW	~~6/30/18~~ 6/29/18	15:19	C	GW	3	3		5	X	X	X	X	X	X	X	X	X	X		collection date changed - client notified @ 6/29/18
		@ 6/29/18																			

MA DEP MCP CAM Report? [x] Yes [ ] No
CT DPH RCP Report? [ ] Yes [ ] No
[x] Standard [ ] No QC
[ ] DQA*
[ ] ASP A* [ ] ASP B*
[ ] NJ Reduced* [ ] NJ Full*
[ ] Tier II* [ ] Tier IV*
[ ] Other:
State-specific reporting standards:

Relinquished by:	Received by:	Date:	Time:	Temp °C
[signature]	C. Stafford	6/30/18	16:15	Observed 3.9
				Correction Factor 0
				Corrected 3.9
				IR ID # 1

[ ] EDD format:
[x] E-mail to: MREISER@CMGENV.COM

Condition upon receipt: Custody Seals: [ ] Present [ ] Intact [ ] Broken
[ ] Ambient [x] Iced [ ] Refrigerated [ ] DI VOA Frozen [ ] Soil Jar Frozen

eurofins | Spectrum Analytical

11 Almgren Drive
Agawam, MA 01001
(413) 789-9018

This preceding chain of custody has been amended to include the client requested additional analyses as noted below:

Laboratory ID	*Client ID*	*Analysis*	*Added*
SC48298-01	MW	Total Calcium by ICP	7/18/2018
SC48298-01	MW	Total Hardness	7/18/2018
SC48298-01	MW	Total Magnesium by ICP	7/18/2018

Batch Summary

[CALC]

General Chemistry Parameters

SC48298-01 (MW)

1809121

General Chemistry Parameters

1809121-BLK1
1809121-BS1
1809121-SRM1
SC48298-01 (MW)

1809151

Volatile Organic Compounds

1809151-BLK1
1809151-BS1
1809151-BSD1
SC48298-01 (MW)

1809166

Total Metals by EPA 200/6000 Series Methods

SC48298-01 (MW)

1809204

Extractable Petroleum Hydrocarbons

1809204-BLK1
1809204-BS2
1809204-BSD2
SC48298-01 (MW)

1809205

Semivolatile Organic Compounds by GCMS

1809205-BLK1
1809205-BS1
1809205-BSD1
SC48298-01 (MW)

1809237

General Chemistry Parameters

1809237-BLK1
1809237-BS1
SC48298-01 (MW)

1809238

General Chemistry Parameters

1809238-BLK1
1809238-BS1
SC48298-01 (MW)

1809252

Total Metals by EPA 6000/7000 Series Methods

1809252-BLK1
1809252-BS1
1809252-BSD1
SC48298-01 (MW)
SC48298-01 (MW)

1809253

Total Metals by EPA 200 Series Methods

1809253-BLK1
1809253-BS1
1809253-DUP1
1809253-MS1
1809253-MSD1
1809253-PS1
SC48298-01 (MW)

1809269

General Chemistry Parameters

1809269-BLK1
1809269-BS1
1809269-SRM1
SC48298-01 (MW)

1809365

General Chemistry Parameters

1809365-BLK1
1809365-BS1
1809365-SRM1
SC48298-01 (MW)

1809392

General Chemistry Parameters

1809392-BLK1
1809392-BLK2
1809392-BS1
1809392-BS2
1809392-DUP1
1809392-MS1
1809392-MSD1
1809392-SRM1
SC48298-01 (MW)

437147A

Subcontracted Analyses

CA81150-BLK
CA81150-DUP
CA81150-LCS
CA81150-MS
SC48298-01 (MW)

S602716

Extractable Petroleum Hydrocarbons

S602716-CAL9
S602716-CALA
S602716-CALB
S602716-CALC
S602716-CALD
S602716-CALE
S602716-CALF
S602716-CALG
S602716-CALH
S602716-CALI
S602716-CALJ
S602716-CALK
S602716-CALL
S602716-CALM
S602716-ICV2
S602716-LCV2

S818863

Semivolatile Organic Compounds by GCMS

S818863-CAL1
S818863-CAL2
S818863-CAL3
S818863-CAL4
S818863-CAL5
S818863-CAL6
S818863-CAL7
S818863-CAL8
S818863-CAL9
S818863-CALA
S818863-ICV1
S818863-LCV1
S818863-LCV2
S818863-TUN1

S820051

Volatile Organic Compounds

S820051-CAL1
S820051-CAL2
S820051-CAL3
S820051-CAL4
S820051-CAL5
S820051-CAL6
S820051-CAL7
S820051-CAL8
S820051-CAL9
S820051-ICV1
S820051-LCV1
S820051-LCV2
S820051-TUN1
S820051-TUN2

S820540

Volatile Organic Compounds

S820540-CCV1
S820540-TUN1

S820648

Extractable Petroleum Hydrocarbons

S820648-CCV1
S820648-CCV2
S820648-CCV3
S820648-CCV5

S820656

Semivolatile Organic Compounds by GCMS

S820656-CCV1
S820656-TUN1

S820675

Semivolatile Organic Compounds by GCMS

S820675-CCV1
S820675-TUN1

S820789

Semivolatile Organic Compounds by GCMS

S820789-CCV1
S820789-TUN1

eurofins | Spectrum Analytical

☑ Final Report
☐ Revised Report

Report Date:
16-Jul-18 13:43

Laboratory Report
SC48548

CMG Environmental, Inc.
67 Hall Road
Sturbridge, MA 01566
Attn: Gary Magnuson

Project: 399 N. Hampton St - Amherst, MA
Project #: 2018-136

I attest that the information contained within the report has been reviewed for accuracy and checked against the quality control requirements for each method. These results relate only to the sample(s) as received.
All applicable NELAC requirements have been met.

Massachusetts # M-MA138/MA1110
Connecticut # PH-0777
Florida # E87936
Maine # MA138
New Hampshire # 2972/2538
New Jersey # MA011
New York # 11393
Pennsylvania # 68-04426/68-02924
Rhode Island # LAO00348
USDA # P330-15-00375
Vermont # VT-11393

Authorized by:

Dawn Wojcik
Laboratory Director

Eurofins Spectrum Analytical holds primary certification in the State of Massachusetts for the analytes as indicated with an X in the "Cert." column within this report. Please note that the State of Massachusetts does not offer certification for all analytes. Please refer to our website for specific certification holdings in each state.
Please note that this report contains 12 pages of analytical data plus Chain of Custody document(s). When the Laboratory Report is indicated as revised, this report supersedes any previously dated reports for the laboratory ID(s) referenced above. Where this report identifies subcontracted analyses, copies of the subcontractor's test report are available upon request. This report may not be reproduced, except in full, without written approval from Eurofins Spectrum Analytical, Inc.

Eurofins Spectrum Analytical, Inc. is a NELAC accredited laboratory organization and meets NELAC testing standards. Use of the NELAC logo however does not insure that Eurofins Spectrum Analytical, Inc. is currently accredited for the specific method or analyte indicated. Please refer to our Quality web page at www.spectrum-analytical.com for a full listing of our current certifications and fields of accreditation. States in which Eurofins Spectrum Analytical, Inc. holds NELAC certification are New York, New Hampshire, New Jersey, Pennsylvania and Florida. All analytical work for Volatile Organic and Air analysis are transferred to and conducted at our 830 Silver Street location (PA-68-04426).

Please contact the Laboratory or Technical Director at 800-789-9115 with any questions regarding the data contained in this laboratory report.

Sample Summary

Work Order: SC48548

Project: 399 N. Hampton St - Amherst, MA

Project Number: 2018-136

Laboratory ID	Client Sample ID	Matrix	Date Sampled	Date Received
SC48548-01	REC-H2O	Surface Water	10-Jul-18 16:45	10-Jul-18 17:45

CASE NARRATIVE:

Data has been reported to the RDL. This report excludes estimated concentrations detected below the RDL and above the MDL (J-Flag).

All non-detects and all results below the reporting limit are reported as "<" (less than) the reporting limit in this report.

The samples were received 1.7 degrees Celsius, please refer to the Chain of Custody for details specific to temperature upon receipt. An infrared thermometer with a tolerance of +/- 1.0 degrees Celsius was used immediately upon receipt of the samples.

If a Matrix Spike (MS), Matrix Spike Duplicate (MSD) or Duplicate (DUP) was not requested on the Chain of Custody, method criteria may have been fulfilled with a source sample not of this Sample Delivery Group. If method or program required MS/MSD/Dup were not performed, sufficient sample was not provided to the laboratory.

Analyses for Total Hardness, pH, and Total Residual Chlorine fall under the state of Pennsylvania code Chapter 252.6 accreditation by rule.

See below for any non-conformances and issues relating to quality control samples and/or sample analysis/matrix.

EPA 200.7

Spikes:

1809601-MS1 *Source: SC48548-01*

The RPD and/or percent recovery for this QC spike sample cannot be accurately calculated due to the high concentration of analyte inherent in the sample.

Calcium
Magnesium

1809601-PS1 *Source: SC48548-01*

The RPD and/or percent recovery for this QC spike sample cannot be accurately calculated due to the high concentration of analyte inherent in the sample.

Calcium
Magnesium

Duplicates:

1809601-DUP1 *Source: SC48548-01*

Analyses are not controlled on RPD values from sample concentrations that are less than 5 times the reporting level. The batch is accepted based upon the difference between the sample and duplicate is less than or equal to the reporting limit.

Zinc

MRL raised to correlate to batch QC reporting limits.

Magnesium

Samples:

SC48548-01 *REC-H2O*

MRL raised to correlate to batch QC reporting limits.

Magnesium

SM3500-Cr-B (11)/7196A

Spikes:

1809627-MS1 *Source: SC48548-01*

SM3500-Cr-B (11)/7196A

Spikes:

1809627-MS1 *Source: SC48548-01*

The spike recovery for this QC sample is outside the established control limits. The sample results for the QC batch were accepted based on LCS/LCSD or SRM recoveries within the control limits.

Hexavalent Chromium

1809627-MSD1 *Source: SC48548-01*

The spike recovery for this QC sample is outside the established control limits. The sample results for the QC batch were accepted based on LCS/LCSD or SRM recoveries within the control limits.

Hexavalent Chromium

Samples:

SC48548-01 *REC-H2O*

The Reporting Limit has been raised to account for matrix interference.

Hexavalent Chromium

Sample Acceptance Check Form

Client:	CMG Environmental, Inc.
Project:	399 N. Hampton St - Amherst, MA / 2018-136
Work Order:	SC48548
Sample(s) received on:	7/10/2018

The following outlines the condition of samples for the attached Chain of Custody upon receipt.

	Yes	No	N/A
Were custody seals present?	☐	☑	☐
Were custody seals intact?	☐	☐	☑
Were samples received at a temperature of ≤ 6°C?	☑	☐	☐
Were samples cooled on ice upon transfer to laboratory representative?	☑	☐	☐
Were sample containers received intact?	☑	☐	☐
Were samples properly labeled (labels affixed to sample containers and include sample ID, site location, and/or project number and the collection date)?	☑	☐	☐
Were samples accompanied by a Chain of Custody document?	☑	☐	☐
Does Chain of Custody document include proper, full, and complete documentation, which shall include sample ID, site location, and/or project number, date and time of collection, collector's name, preservation type, sample matrix and any special remarks concerning the sample?	☑	☐	☐
Did sample container labels agree with Chain of Custody document?	☑	☐	☐
Were samples received within method-specific holding times?	☑	☐	☐

Summary of Hits

Lab ID: SC48548-01 **Client ID:** REC-H2O

Parameter	Result	Flag	Reporting Limit	Units	Analytical Method
Ammonia as Nitrogen	1.00		0.05	mg/L	E350.1
Arsenic	0.0132		0.0040	mg/l	EPA 200.7
Calcium	75.6		0.100	mg/l	EPA 200.7
Chromium	0.0062		0.0050	mg/l	EPA 200.7
Copper	0.0163		0.0050	mg/l	EPA 200.7
Magnesium	22.3	R06	5.00	mg/l	EPA 200.7
Hardness	281		20.8	mg/l CaCO3	SM 2340B (11)

Please note that because there are no reporting limits associated with hazardous waste characterizations or micro analyses, this summary does not include hits from these analyses if included in this work order.

Sample Identification	Client Project #	Matrix	Collection Date/Time	Received
REC-H2O SC48548-01	2018-136	Surface Water	10-Jul-18 16:45	10-Jul-18

CAS No.	Analyte(s)	Result	Flag	Units	*RDL	MDL	Dilution	Method Ref.	Prepared	Analyzed	Analyst	Batch	Cert.
Total Metals by EPA 200/6000 Series Methods													
Prepared by method General Prep-Metal													
	Preservation	**Field Preserved; pH<2 confirmed**		N/A			1	EPA 200/6000 methods	11-Jul-18		KP1	1809617	
Total Metals by EPA 200 Series Methods													
7440-22-4	Silver	< 0.0050		mg/l	0.0050	0.0035	1	EPA 200.7	11-Jul-18	13-Jul-18	SJR/TBC	1809601	X
7440-38-2	Arsenic	**0.0132**		mg/l	0.0040	0.0028	1	"	"	"	"	"	X
7440-70-2	Calcium	**75.6**		mg/l	0.100	0.0340	1	"	"	"	"	"	X
7440-43-9	Cadmium	< 0.0025		mg/l	0.0025	0.0004	1	"	"	"	"	"	X
7440-47-3	Chromium	**0.0062**		mg/l	0.0050	0.0019	1	"	"	"	"	"	X
7440-50-8	Copper	**0.0163**		mg/l	0.0050	0.0029	1	"	"	"	"	"	X
7439-89-6	Iron	< 0.125		mg/l	0.125	0.0100	1	"	"	"	"	"	X
7439-97-6	Mercury	< 0.00020		mg/l	0.00020	0.00014	1	EPA 245.1/7470A	"	13-Jul-18	ABW	1809602	X
7439-95-4	Magnesium	**22.3**	R06	mg/l	5.00	0.0074	1	EPA 200.7	"	13-Jul-18	SJR/TBC	1809601	X
7440-02-0	Nickel	< 0.0050		mg/l	0.0050	0.0010	1	"	"	"	"	"	X
7439-92-1	Lead	< 0.0075		mg/l	0.0075	0.0034	1	"	"	"	"	"	X
7440-36-0	Antimony	< 0.0060		mg/l	0.0060	0.0026	1	"	"	"	"	"	X
7782-49-2	Selenium	< 0.0150		mg/l	0.0150	0.0072	1	"	"	"	"	"	X
7440-66-6	Zinc	< 0.0250		mg/l	0.0250	0.0027	1	"	"	"	"	"	X
General Chemistry Parameters													
16065-83-1	Trivalent Chromium	< 0.0250		mg/l	0.0250	0.0053	1	Calculation	11-Jul-18	16-Jul-18	SJR	1809601	
	Hardness	**281**	HD	mg/l CaCO3	20.8	0.115	1	SM 2340B (11)	"	13-Jul-18	SJR/TBC	[CALC]	
18540-29-9	Hexavalent Chromium	< 0.025	R01, D	mg/l	0.025	0.010	5	SM3500-Cr-B (11)/7196A	11-Jul-18 14:31	11-Jul-18 15:03	TN	1809627	
	pH	**7.20**	pH	pH Units			1	ASTM D 1293-99B	11-Jul-18 14:39	11-Jul-18 15:00	BD	1809628	X
Subcontracted Analyses													
Prepared by method 438460													
*Analysis performed by Phoenix Environmental Labs, Inc. * - MACT007*													
7664-41-7	Ammonia as Nitrogen	**1.00**		mg/L	0.05	0.05	1	E350.1	10-Jul-18 16:45	13-Jul-18 12:15	CT007	438460A	

Total Metals by EPA 200 Series Methods - Quality Control

Analyte(s)	Result	Flag	Units	*RDL	Spike Level	Source Result	%REC	%REC Limits	RPD	RPD Limit
EPA 200.7										
Batch 1809601 - EPA 200 Series										
Blank (1809601-BLK1)					Prepared: 11-Jul-18 Analyzed: 13-Jul-18					
Antimony	< 0.0060		mg/l	0.0060						
Selenium	< 0.0150		mg/l	0.0150						
Iron	< 0.125		mg/l	0.125						
Nickel	< 0.0050		mg/l	0.0050						
Zinc	< 0.0250		mg/l	0.0250						
Arsenic	< 0.0040		mg/l	0.0040						
Lead	< 0.0075		mg/l	0.0075						
Silver	< 0.0050		mg/l	0.0050						
Magnesium	< 5.00		mg/l	5.00						
Copper	< 0.0050		mg/l	0.0050						
Chromium	< 0.0050		mg/l	0.0050						
Cadmium	< 0.0025		mg/l	0.0025						
Calcium	< 0.100		mg/l	0.100						
LCS (1809601-BS1)					Prepared: 11-Jul-18 Analyzed: 13-Jul-18					
Antimony	**1.30**		mg/l	0.0060	1.25		104	85-115		
Selenium	**1.32**		mg/l	0.0150	1.25		105	85-115		
Iron	**1.27**		mg/l	0.125	1.25		101	85-115		
Lead	**1.27**		mg/l	0.0075	1.25		102	85-115		
Nickel	**1.29**		mg/l	0.0050	1.25		103	85-115		
Magnesium	**1.33**		mg/l	5.00	1.25		106	85-115		
Chromium	**1.35**		mg/l	0.0050	1.25		108	85-115		
Calcium	**6.12**		mg/l	0.100	6.25		98	85-115		
Arsenic	**1.25**		mg/l	0.0040	1.25		100	85-115		
Zinc	**1.30**		mg/l	0.0250	1.25		104	85-115		
Copper	**1.38**		mg/l	0.0050	1.25		111	85-115		
Silver	**1.31**		mg/l	0.0050	1.25		105	85-115		
Cadmium	**1.30**		mg/l	0.0025	1.25		104	85-115		
Duplicate (1809601-DUP1)			**Source: SC48548-01**		Prepared: 11-Jul-18 Analyzed: 13-Jul-18					
Antimony	< 0.0060		mg/l	0.0060		BRL				20
Selenium	< 0.0150		mg/l	0.0150		BRL				20
Iron	**0.117**	J	mg/l	0.125		0.113			3	20
Copper	**0.0155**		mg/l	0.0050		0.0163			5	20
Silver	< 0.0050		mg/l	0.0050		BRL				20
Arsenic	**0.0128**		mg/l	0.0040		0.0132			3	20
Calcium	**74.0**		mg/l	0.100		75.6			2	20
Chromium	**0.0057**		mg/l	0.0050		0.0062			8	20
Magnesium	**21.7**	R06	mg/l	5.00		22.3			3	20
Nickel	**0.0025**	J	mg/l	0.0050		0.0026			2	20
Lead	< 0.0075		mg/l	0.0075		BRL				20
Zinc	**0.0162**	J,QR8	mg/l	0.0250		0.0218			30	20
Cadmium	< 0.0025		mg/l	0.0025		BRL				20
Matrix Spike (1809601-MS1)			**Source: SC48548-01**		Prepared: 11-Jul-18 Analyzed: 13-Jul-18					
Selenium	**1.46**		mg/l	0.0150	1.25	BRL	116	70-130		
Antimony	**1.32**		mg/l	0.0060	1.25	BRL	106	70-130		
Iron	**1.37**		mg/l	0.125	1.25	0.113	100	70-130		
Copper	**1.37**		mg/l	0.0050	1.25	0.0163	108	70-130		
Chromium	**1.29**		mg/l	0.0050	1.25	0.0062	103	70-130		
Lead	**1.17**		mg/l	0.0075	1.25	BRL	93.7	70-130		
Cadmium	**1.25**		mg/l	0.0025	1.25	BRL	100	70-130		
Calcium	**79.8**	QM2	mg/l	0.100	6.25	75.6	66	70-130		

Total Metals by EPA 200 Series Methods - Quality Control

Analyte(s)	Result	Flag	Units	*RDL	Spike Level	Source Result	%REC	%REC Limits	RPD	RPD Limit
EPA 200.7										
Batch 1809601 - EPA 200 Series										
Matrix Spike (1809601-MS1)			**Source: SC48548-01**			Prepared: 11-Jul-18 Analyzed: 13-Jul-18				
Arsenic	**1.36**		mg/l	0.0040	1.25	0.0132	108	70-130		
Zinc	**1.30**		mg/l	0.0250	1.25	0.0218	102	70-130		
Silver	**1.41**		mg/l	0.0050	1.25	BRL	113	70-130		
Magnesium	**23.0**	QM2	mg/l	5.00	1.25	22.3	63	70-130		
Nickel	**1.21**		mg/l	0.0050	1.25	0.0026	96	70-130		
Post Spike (1809601-PS1)			**Source: SC48548-01**			Prepared: 11-Jul-18 Analyzed: 13-Jul-18				
Selenium	**1.44**		mg/l	0.0150	1.25	BRL	115	85-115		
Antimony	**1.33**		mg/l	0.0060	1.25	BRL	107	85-115		
Iron	**1.34**		mg/l	0.125	1.25	0.113	98	85-115		
Nickel	**1.20**		mg/l	0.0050	1.25	0.0026	96	85-115		
Silver	**1.42**		mg/l	0.0050	1.25	BRL	114	85-115		
Zinc	**1.30**		mg/l	0.0250	1.25	0.0218	102	85-115		
Magnesium	**22.6**	QM2	mg/l	5.00	1.25	22.3	28	85-115		
Copper	**1.42**		mg/l	0.0050	1.25	0.0163	112	85-115		
Lead	**1.17**		mg/l	0.0075	1.25	BRL	94.0	85-115		
Chromium	**1.33**		mg/l	0.0050	1.25	0.0062	106	85-115		
Cadmium	**1.25**		mg/l	0.0025	1.25	BRL	100	85-115		
Calcium	**78.0**	QM2	mg/l	0.100	6.25	75.6	37	85-115		
Arsenic	**1.34**		mg/l	0.0040	1.25	0.0132	106	85-115		
EPA 245.1/7470A										
Batch 1809602 - EPA200/SW7000 Series										
Blank (1809602-BLK1)						Prepared: 11-Jul-18 Analyzed: 13-Jul-18				
Mercury	< 0.00020		mg/l	0.00020						
LCS (1809602-BS1)						Prepared: 11-Jul-18 Analyzed: 13-Jul-18				
Mercury	**0.00452**		mg/l	0.00020	0.00500		90	85-115		
Duplicate (1809602-DUP1)			**Source: SC48548-01**			Prepared: 11-Jul-18 Analyzed: 13-Jul-18				
Mercury	< 0.00020		mg/l	0.00020		BRL				20
Matrix Spike (1809602-MS1)			**Source: SC48548-01**			Prepared: 11-Jul-18 Analyzed: 13-Jul-18				
Mercury	**0.00487**		mg/l	0.00020	0.00500	BRL	97	80-120		
Post Spike (1809602-PS1)			**Source: SC48548-01**			Prepared: 11-Jul-18 Analyzed: 13-Jul-18				
Mercury	**0.00493**		mg/l	0.00020	0.00500	BRL	99	85-115		

General Chemistry Parameters - Quality Control

Analyte(s)	Result	Flag	Units	*RDL	Spike Level	Source Result	%REC	%REC Limits	RPD	RPD Limit
ASTM D 1293-99B										
Batch 1809628 - General Preparation										
Duplicate (1809628-DUP1)			**Source: SC48548-01**		Prepared & Analyzed: 11-Jul-18					
pH	**7.19**		pH Units			7.20			0.1	5
Reference (1809628-SRM1)					Prepared & Analyzed: 11-Jul-18					
pH	**6.02**		pH Units		6.00		100	97.5-102.5		
Reference (1809628-SRM2)					Prepared & Analyzed: 11-Jul-18					
pH	**5.98**		pH Units		6.00		100	97.5-102.5		
SM3500-Cr-B (11)/7196A										
Batch 1809627 - General Preparation										
Blank (1809627-BLK1)					Prepared & Analyzed: 11-Jul-18					
Hexavalent Chromium	< 0.005		mg/l	0.005						
LCS (1809627-BS1)					Prepared & Analyzed: 11-Jul-18					
Hexavalent Chromium	**0.051**		mg/l	0.005	0.0500		103	90-111		
Calibration Blank (1809627-CCB1)					Prepared & Analyzed: 11-Jul-18					
Hexavalent Chromium	**0.00**		mg/l							
Calibration Blank (1809627-CCB2)					Prepared & Analyzed: 11-Jul-18					
Hexavalent Chromium	**0.00**		mg/l							
Calibration Check (1809627-CCV1)					Prepared & Analyzed: 11-Jul-18					
Hexavalent Chromium	**0.052**		mg/l	0.005	0.0500		104	90-110		
Calibration Check (1809627-CCV2)					Prepared & Analyzed: 11-Jul-18					
Hexavalent Chromium	**0.052**		mg/l	0.005	0.0500		103	90-110		
Duplicate (1809627-DUP1)			**Source: SC48548-01**		Prepared & Analyzed: 11-Jul-18					
Hexavalent Chromium	**0.019**	J,D	mg/l	0.025		0.020			3	20
Matrix Spike (1809627-MS1)			**Source: SC48548-01**		Prepared & Analyzed: 11-Jul-18					
Hexavalent Chromium	**0.094**	D, QM9	mg/l	0.025	0.250	0.020	30	85-115		
Matrix Spike Dup (1809627-MSD1)			**Source: SC48548-01**		Prepared & Analyzed: 11-Jul-18					
Hexavalent Chromium	**0.083**	QM9, D	mg/l	0.025	0.250	0.020	25	85-115	13	20
Reference (1809627-SRM1)					Prepared & Analyzed: 11-Jul-18					
Hexavalent Chromium	**0.028**		mg/l	0.005	0.0250		110	85-115		

Subcontracted Analyses - Quality Control

Analyte(s)	Result	Flag	Units	*RDL	Spike Level	Source Result	%REC	%REC Limits	RPD	RPD Limit
E350.1										
Batch 438460A - 438460										
BLK (CA87145-BLK)			**Source: CA87145**			Prepared: 12-Jul-18 Analyzed: 13-Jul-18				
Ammonia as Nitrogen	< 0.05		mg/L	0.05				-		
DUP (CA87145-DUP)			**Source: CA87145**			Prepared: 12-Jul-18 Analyzed: 13-Jul-18				
Ammonia as Nitrogen	**0.06**		mg/L	0.05				-	NC	20
LCS (CA87145-LCS)			**Source: CA87145**			Prepared: 12-Jul-18 Analyzed: 13-Jul-18				
Ammonia as Nitrogen	**3.570**		mg/L	0.05	3.74		95.5	90-110		20
MS (CA87145-MS)			**Source: CA87145**			Prepared: 12-Jul-18 Analyzed: 13-Jul-18				
Ammonia as Nitrogen	**2.060**		mg/L	0.05	2		100	90-110		20

Notes and Definitions

D	Data reported from a dilution
QM2	The RPD and/or percent recovery for this QC spike sample cannot be accurately calculated due to the high concentration of analyte inherent in the sample.
QM9	The spike recovery for this QC sample is outside the established control limits. The sample results for the QC batch were accepted based on LCS/LCSD or SRM recoveries within the control limits.
QR8	Analyses are not controlled on RPD values from sample concentrations that are less than 5 times the reporting level. The batch is accepted based upon the difference between the sample and duplicate is less than or equal to the reporting limit.
R01	The Reporting Limit has been raised to account for matrix interference.
R06	MRL raised to correlate to batch QC reporting limits.
dry	Sample results reported on a dry weight basis
NR	Not Reported
RPD	Relative Percent Difference
J	Detected but below the Reporting Limit; therefore, result is an estimated concentration (CLP J-Flag).
pH	The method for pH does not stipulate a specific holding time other than to state that the samples should be analyzed as soon as possible. For aqueous samples the 40 CFR 136 specifies a holding time of 15 minutes from sampling to analysis. Therefore all aqueous pH samples not analyzed in the field are considered out of hold time at the time of sample receipt. All soil samples are analyzed as soon as possible after sample receipt.
HD	Total Hardness is a calculation based on the reported values of Ca and Mg.

Laboratory Control Sample (LCS): A known matrix spiked with compound(s) representative of the target analytes, which is used to document laboratory performance.

Matrix Duplicate: An intra-laboratory split sample which is used to document the precision of a method in a given sample matrix.

Matrix Spike: An aliquot of a sample spiked with a known concentration of target analyte(s). The spiking occurs prior to sample preparation and analysis. A matrix spike is used to document the bias of a method in a given sample matrix.

Method Blank: An analyte-free matrix to which all reagents are added in the same volumes or proportions as used in sample processing. The method blank should be carried through the complete sample preparation and analytical procedure. The method blank is used to document contamination resulting from the analytical process.

Method Detection Limit (MDL): The minimum concentration of a substance that can be measured and reported with 99% confidence that the analyte concentration is greater than zero and is determined from analysis of a sample in a given matrix type containing the analyte.

Reportable Detection Limit (RDL): The lowest concentration that can be reliably achieved within specified limits of precision and accuracy during routine laboratory operating conditions. For many analytes the RDL analyte concentration is selected as the lowest non-zero standard in the calibration curve. While the RDL is approximately 5 to 10 times the MDL, the RDL for each sample takes into account the sample volume/weight, extract/digestate volume, cleanup procedures and, if applicable, dry weight correction. Sample RDLs are highly matrix-dependent.

Surrogate: An organic compound which is similar to the target analyte(s) in chemical composition and behavior in the analytical process, but which is not normally found in environmental samples. These compounds are spiked into all blanks, standards, and samples prior to analysis. Percent recoveries are calculated for each surrogate.

Continuing Calibration Verification: The calibration relationship established during the initial calibration must be verified at periodic intervals. Concentrations, intervals, and criteria are method specific.

SC48548 Sm R.R. 18603

eurofins | Spectrum Analytical

CHAIN OF CUSTODY RECORD

Page 1 of 1

Special Handling:
☐ Standard TAT - 7 to 10 business days
☒ Rush TAT - Date Needed: 7-16-18
All TATs subject to laboratory approval
Min. 24-hr notification needed for rushes
Samples disposed after 30 days unless otherwise instructed.

Report To: CMG Environmental Inc
67 Hall RD
Sturbridge MA 01566

Telephone #: 774-241-0901
Project Mgr: G. MacGuson

Invoice To: CMG

P.O No.: Quote #:

Project No: 2018-136
Site Name: 399 NR
Location: Amherst State: MA
Sampler(s): GM

F=Field Filtered 1=Na_2S2O_3 2=HCl 3=H_2SO_4 4=HNO_3 5=NaOH 6=Ascorbic Acid
7=CH3OH 8=$NaHSO_4$ 9=Deionized Water 10=H_3PO_4 11= ICG 12=

DW=Drinking Water GW=Groundwater SW=Surface Water WW=Waste Water
O=Oil SO=Soil SL=Sludge A=Indoor/Ambient Air SG=Soil Gas
X1= X2= X3=

G= Grab C=Compsite

List Preservative Code below:

Lab ID:	Sample ID:	Date:	Time:	Type	Matrix	# of VOA Vials	# of Amber Glass	# of Clear Glass	# of Plastic		pH, Temp (11)	Hardness (11)	Ammonia (11)	Total Metals (4)	Sb, As, Cd, Cr III, Cr VI (4)	Cu, Fe, Pb, Hg, Ni (4)	Se, Ag, Zn (4)		Check if chlorinated	QA/QC Reporting Notes: * additional charges may appply
SC48548-01	REC-H_2O	7-10-18	16:45	G	SW				5		X	X	X	X	X	X	X		☐	
																			☐	
																			☐	MA DEP MCP CAM Report? ☒ Yes ☐ No (GM)
																			☐	CT DPH RCP Report? ☐ Yes ☐ No
																			☐	☐ Standard ☐ No QC ☐ DQA*
																			☐	☐ ASP A* ☐ ASP B* ☐ NJ Reduced* ☐ NJ Full* ☐ Tier II* ☐ Tier IV*
																			☐	☒ Other: NPDES
																			☐	State-specific reporting standards:
																			☐	Metals by 200.7
																			☐	Field pH 7.06
																			☐	Field Temp 21.6 °C
																			☐	
																			☐	
																			☐	
																			☐	

Relinquished by:	Received by:	Date:	Time:	Temp °C
GM	C. Stafford	7/10/18	17:45	Observed 1.7
				Correction Factor 0
				Corrected 1.7
				IR ID # 2

☐ EDD format:
☒ E-mail to: MRegen@CMGenv.com
GMacGuson@CMGenv.com

Condition upon receipt: Custody Seals: ☐ Present ☐ Intact ☐ Broken
☐ Ambient ☒ Iced ☐ Refrigerated ☐ DI VOA Frozen ☐ Soil Jar Frozen

1. Chemical-Specific Effluent Limitations in Massachusetts and New Hampshire

During the period beginning on the effective date and lasting through the expiration date, EPA will authorize the discharges under Part 1.1 of this general permit to receiving waters in Massachusetts and New Hampshire. The effective date of authorization for each discharge covered under this general permit is the date indicated in EPA's written authorization to discharge, lasting through the expiration date of this general permit or written termination of coverage, whichever occurs first. Each discharge shall be limited and monitored as specified in Table 2, below. The applicability of effluent limitations for each Activity Category listed in Table 1 is included in footnote 2, below. Additional limitations and monitoring requirements are specified in Parts 2.2 through 2.5 and Part 4, below.

Minimum Detection Limits

Table 2: Chemical-Specific Effluent Limitations and Monitor-Only Requirements[1]

Parameter[2]	Effluent Limitation[3,4]	
	TBEL[5]	WQBEL[6]
A. Inorganics		
Ammonia[7]	Report mg/L	
Chloride[8]	Report µg/L	
Total Residual Chlorine[9]	0.2 mg/L	FW= 11 µg/L SW= 7.5 µg/L
Total Suspended Solids	30 mg/L	
Antimony[10]	206 µg/L	640 µg/L in MA 4.3 mg/L in NH
Arsenic[10]	104 µg/L	FW= 10 µg/L SW= 36 µg/L
Cadmium[11,12]	10.2 µg/L	FW= 0.25 µg/L SW= 8.8 µg/L in MA SW= 9.3 µg/L in NH
Chromium III[11,12]	323 µg/L	FW= 74 µg/L SW= 100 µg/L
Chromium VI[11,13]	323 µg/L	FW= 11 µg/L SW= 50 µg/L
Copper[11,12]	242 µg/L	FW= 9 µg/L SW= 3.1 µg/L
Iron[10]	5,000 µg/L	FW = 1,000 µg/L
Lead[11,12]	160 µg/L	FW= 2.5 µg/L SW= 8.1 µg/L
Mercury[11]	0.739 µg/L	FW= 0.77 µg/L SW= 0.94 µg/L
Nickel[11,12]	1,450 µg/L	FW= 52 µg/L SW= 8.2 µg/L
Selenium	235.8 µg/L	FW= 5.0 µg/L[10] SW= 71 µg/L[11]
Silver[11,12]	35.1 µg/L	FW= 3.2 µg/L SW= 1.9 µg/L
Zinc[11,12]	420 µg/L	FW= 120 µg/L SW= 81 µg/L

[c] Activity Category III-G:
all parameters in contamination type A. Inorganics; and
if present in contamination type B through F.

[d] Activity Category IV-G, V-G, VI-G, VII-G, VIII-G:
if present in contamination type A through F.

[e] Activity Category III-H, IV-H, V-H, VI-H, VII-H, VIII-H:
all parameters in contamination type A through F apply.

[f] When "if present" is noted above, the effluent limitation and/or monitor-only requirement for a parameter in the Contamination Type applies to a site only if the given parameter is known or believed present at that site. When "any present" is noted above, the effluent limitations and/or monitor-only requirements for all parameters in the Contamination Type apply to a site when at least one parameter in that Contamination Type is known or believed present at that site, unless otherwise specified below. See Part 1.1 for additional definitions.

[4] The limitation type for all parameters is monthly average. See Appendix IX for additional definitions.

[5] For any parameter with a single effluent limitation, that effluent limitation applies to a site if that parameter is applicable to that site. For any parameter with both a TBEL and a WQBEL, the TBEL applies to a site, at a minimum, if that parameter is applicable to that site.

[6] For any parameter with both a TBEL and a WQBEL, the WQBEL applies to a site if: 1) *The operator* determines that the WQBEL for a parameter calculated in accordance with Appendix V or VI applies; or 2) EPA or the appropriate State determines that a WQBEL is necessary to meet water quality standards. The calculation of WQBELs shall be as follows: 1) A dilution factor may be used to calculate the WQBEL for a parameter, if allowable and approved by the appropriate State prior to the submission of the NOI to EPA; 2) The calculations are completed in accordance with the instructions provided in Appendix V for sites located in Massachusetts or Appendix VI for sites located in New Hampshire; 3) The WQBEL calculations are included in the NOI submitted to EPA; and 4) The calculated WQBEL is confirmed by EPA in writing. In the event of a calculation error, the operator will be informed of any corrected WQBEL when notified of permit coverage by EPA. Operators are encouraged to use the additional resources provided by EPA at https://www.epa.gov/region1/npdes/rgp.html to follow the calculation methodologies for effluent limitations in Appendix V for sites in Massachusetts and Appendix VI for sites in New Hampshire.

[7] This parameter is expressed as ammonia nitrogen. The minimum level (ML) for analysis must be less than or equal to 0.1 mg/L. See Appendix VII for additional definitions.

[8] Sites located in Massachusetts must report concentrations of chloride. Sites located in New Hampshire may be subject to §401 certification requirements by the State of New Hampshire, including a numeric effluent limitation for chloride.

Batch Summary

[CALC]

General Chemistry Parameters

SC48548-01 (REC-H2O)

1809601

Total Metals by EPA 200 Series Methods

1809601-BLK1
1809601-BS1
1809601-DUP1
1809601-MS1
1809601-PS1
SC48548-01 (REC-H2O)
SC48548-01 (REC-H2O)

1809602

Total Metals by EPA 200 Series Methods

1809602-BLK1
1809602-BS1
1809602-DUP1
1809602-MS1
1809602-PS1
SC48548-01 (REC-H2O)

1809617

Total Metals by EPA 200/6000 Series Methods

SC48548-01 (REC-H2O)

1809627

General Chemistry Parameters

1809627-BLK1
1809627-BS1
1809627-CCB1
1809627-CCB2
1809627-CCV1
1809627-CCV2
1809627-DUP1
1809627-MS1
1809627-MSD1
1809627-SRM1
SC48548-01 (REC-H2O)

1809628

General Chemistry Parameters

1809628-DUP1
1809628-SRM1
1809628-SRM2
SC48548-01 (REC-H2O)

438460A

Subcontracted Analyses

CA87145-BLK
CA87145-DUP
CA87145-LCS
CA87145-MS
SC48548-01 (REC-H2O)

Attachment B

StreamStats Report

StreamStats Report - Amherst

Region ID: MA
Workspace ID: MA20180706172357296000
Clicked Point (Latitude, Longitude): 42.36636, -72.53916
Time: 2018-07-06 13:24:11 -0400

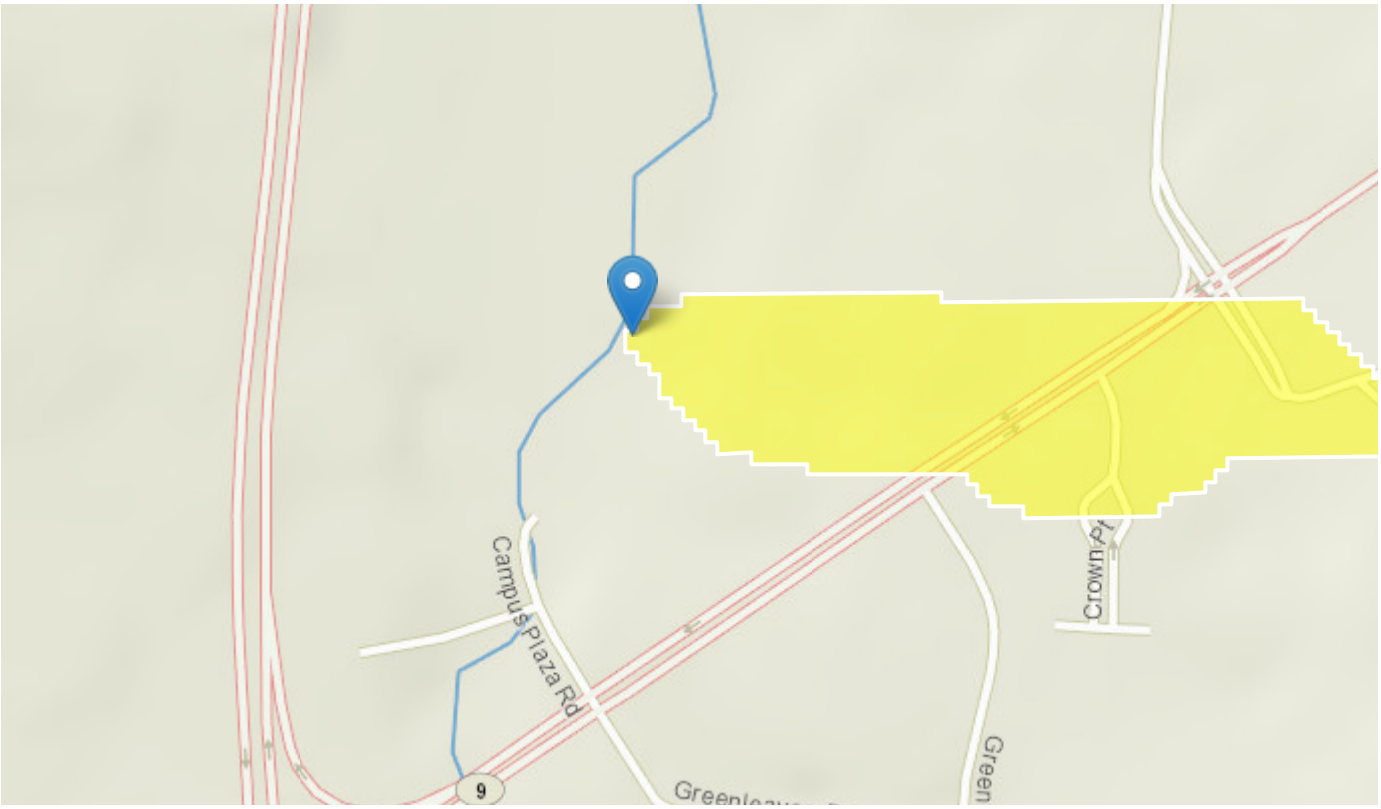

TEST

Basin Characteristics

Parameter Code	Parameter Description	Value	Unit
DRNAREA	Area that drains to a point on a stream	0.04	square miles
BSLDEM250	Mean basin slope computed from 1:250K DEM	.7	percent
DRFTPERSTR	Area of stratified drift per unit of stream length	1.09	square mile per mile
MAREGION	Region of Massachusetts 0 for Eastern 1 for Western	1	dimensionless

General Disclaimers

Parameter values have been edited, computed flows may not apply.

Low-Flow Statistics Parameters [Statewide Low Flow WRIR00 4135]

Parameter Code	Parameter Name	Value	Units	Min Limit	Max Limit
DRNAREA	Drainage Area	0.04	square miles	1.61	149
BSLDEM250	Mean Basin Slope from 250K DEM	0.7	percent	0.32	24.6
DRFTPERSTR	Stratified Drift per Stream Length	1.09	square mile per mile	0	1.29
MAREGION	Massachusetts Region	1	dimensionless	0	1

Low-Flow Statistics Disclaimers [Statewide Low Flow WRIR00 4135]

One or more of the parameters is outside the suggested range. Estimates were extrapolated with unknown errors

Low-Flow Statistics Flow Report [Statewide Low Flow WRIR00 4135]

Statistic	Value	Unit
7 Day 2 Year Low Flow	0.00759	ft^3/s
7 Day 10 Year Low Flow	0.00344	ft^3/s

Low-Flow Statistics Citations

Ries, K.G., III,2000, Methods for estimating low-flow statistics for Massachusetts streams: U.S. Geological Survey Water Resources Investigations Report 00-4135, 81 p. (http://pubs.usgs.gov/wri/wri004135/)

USGS Data Disclaimer: Unless otherwise stated, all data, metadata and related materials are considered to satisfy the quality standards relative to the purpose for which the data were collected. Although these data and associated metadata have been reviewed for accuracy and completeness and approved for

release by the U.S. Geological Survey (USGS), no warranty expressed or implied is made regarding the display or utility of the data for other purposes, nor on all computer systems, nor shall the act of distribution constitute any such warranty.

USGS Software Disclaimer: This software has been approved for release by the U.S. Geological Survey (USGS). Although the software has been subjected to rigorous review, the USGS reserves the right to update the software as needed pursuant to further analysis and review. No warranty, expressed or implied, is made by the USGS or the U.S. Government as to the functionality of the software and related material nor shall the fact of release constitute any such warranty. Furthermore, the software is released on condition that neither the USGS nor the U.S. Government shall be held liable for any damages resulting from its authorized or unauthorized use.

USGS Product Names Disclaimer: Any use of trade, firm, or product names is for descriptive purposes only and does not imply endorsement by the U.S. Government.

Application Version: 4.2.1

Attachment C

Water Quality-Based Effluent Limit Calculations

Enter number values in green boxes below

Notes:

Enter values in the units specified

↓

0.002	Q_R = Enter upstream flow in **MGD**	Freshwater: Q_R equal to the 7Q10; enter alternate Q_R if approved by the State; enter 0 if no dilution factor approved Saltwater (estuarine and marine): enter Q_R if approved by the State; enter 0 if no entry
0.144	Q_P = Enter discharge flow in **MGD**	Discharge flow is equal to the design flow or 1 MGD, whichever is less
0	Downstream 7Q10	Only if approved by State as the entry for Q_R; leave 0 if no entry

Enter a dilution factor, if other than zero

↓

1.01	Saltwater (estuarine and marine): only if approved by the State Leave 0 if no entry

Enter values in the units specified

↓

540	C_d = Enter influent hardness in **mg/L** $CaCO_3$	Freshwater only
281	C_s = Enter receiving water hardness in **mg/L** $CaCO_3$	

Enter **receiving water** concentrations in the units specified

↓

7.2	pH in **Standard Units**	pH, temperature, and ammonia required for all discharges
21.6	Temperature in **°C**	Hardness required for freshwater
1	Ammonia in **mg/L**	Salinity required for saltwater (estuarine and marine)
281	Hardness in **mg/L** $CaCO_3$	Metals required for all discharges if present and if dilution factor is > 1
0	Salinity in **ppt**	Enter 0 if non-detect or testing not required
0.006	Antimony in **µg/L**	
0.0132	Arsenic in **µg/L**	
0.0025	Cadmium in **µg/L**	
0.025	Chromium III in **µg/L**	
0.025	Chromium VI in **µg/L**	
0.0163	Copper in **µg/L**	
0.125	Iron in **µg/L**	
0.0075	Lead in **µg/L**	
0.0002	Mercury in **µg/L**	
0.005	Nickel in **µg/L**	
0.015	Selenium in **µg/L**	
0.005	Silver in **µg/L**	
0.025	Zinc in **µg/L**	

Enter **influent** concentrations in the units specified

↓

0.02	TRC in **µg/L**	if >1 sample, enter maximum if >10 samples, may enter 95th percentile Enter 0 if non-detect or testing not required
2.5	Ammonia in **mg/L**	
30	Antimony in **µg/L**	
78.3	Arsenic in **µg/L**	
20.6	Cadmium in **µg/L**	
220	Chromium III in **µg/L**	
50	Chromium VI in **µg/L**	
915	Copper in **µg/L**	
161000	Iron in **µg/L**	
164	Lead in **µg/L**	
0.33	Mercury in **µg/L**	
125	Nickel in **µg/L**	
15	Selenium in **µg/L**	
5	Silver in **µg/L**	
9060	Zinc in **µg/L**	
5	Cyanide in **µg/L**	
0.603	Phenol in **µg/L**	
1.96	Carbon Tetrachloride in **µg/L**	
2.2	Tetrachloroethylene in **µg/L**	
0.379	Total Phthalates in **µg/L**	
0.596	Diethylhexylphthalate in **µg/L**	
0.757	Benzo(a)anthracene in **µg/L**	
0.748	Benzo(a)pyrene in **µg/L**	
0.935	Benzo(b)fluoranthene in **µg/L**	
0.907	Benzo(k)fluoranthene in **µg/L**	
0.832	Chrysene in **µg/L**	
0.421	Dibenzo(a,h)anthracene in **µg/L**	
0.542	Indeno(1,2,3-cd)pyrene in **µg/L**	
72	Methyl-tert butyl ether in **µg/L**	

Dilution Factor	1.0					
A. Inorganics	TBEL applies if bolded		WQBEL applies if bolded		Compliance Level applies if shown	
Ammonia	**Report**	mg/L	---			
Chloride	**Report**	µg/L	---			
Total Residual Chlorine	0.2	mg/L	**11**	µg/L	50	µg/L
Total Suspended Solids	**30**	mg/L	---			
Antimony	**206**	µg/L	649	µg/L		
Arsenic	104	µg/L	**10**	µg/L		
Cadmium	10.2	µg/L	**0.9523**	µg/L		
Chromium III	**323**	µg/L	345.8	µg/L		
Chromium VI	323	µg/L	**11.6**	µg/L		
Copper	242	µg/L	**39.7**	µg/L		
Iron	5000	µg/L	**1014**	µg/L		
Lead	160	µg/L	**27.37**	µg/L		
Mercury	**0.739**	µg/L	0.92	µg/L		
Nickel	**1450**	µg/L	219.0	µg/L		
Selenium	235.8	µg/L	**5.1**	µg/L		
Silver	**35.1**	µg/L	69.0	µg/L		
Zinc	**420**	µg/L	504.2	µg/L		
Cyanide	**178**	mg/L	5.3	µg/L	---	µg/L
B. Non-Halogenated VOCs						
Total BTEX	**100**	µg/L	---			
Benzene	**5.0**	µg/L	---			
1,4 Dioxane	**200**	µg/L	---			
Acetone	**7970**	µg/L	---			
Phenol	**1,080**	µg/L	304	µg/L		
C. Halogenated VOCs						
Carbon Tetrachloride	4.4	µg/L	**1.6**	µg/L		
1,2 Dichlorobenzene	**600**	µg/L	---			

1,3 Dichlorobenzene	**320**	µg/L	---			
1,4 Dichlorobenzene	**5.0**	µg/L	---			
Total dichlorobenzene	**---**	µg/L	---			
1,1 Dichloroethane	**70**	µg/L	---			
1,2 Dichloroethane	**5.0**	µg/L	---			
1,1 Dichloroethylene	**3.2**	µg/L	---			
Ethylene Dibromide	**0.05**	µg/L	---			
Methylene Chloride	**4.6**	µg/L	---			
1,1,1 Trichloroethane	**200**	µg/L	---			
1,1,2 Trichloroethane	**5.0**	µg/L	---			
Trichloroethylene	**5.0**	µg/L	---			
Tetrachloroethylene	**5.0**	µg/L	3.3	µg/L		
cis-1,2 Dichloroethylene	**70**	µg/L	---			
Vinyl Chloride	**2.0**	µg/L	---			
D. Non-Halogenated SVOCs						
Total Phthalates	**190**	µg/L	---	µg/L		
Diethylhexyl phthalate	**101**	µg/L	2.2	µg/L		
Total Group I Polycyclic Aromatic Hydrocarbons	**1.0**	µg/L	---			
Benzo(a)anthracene	1.0	µg/L	**0.0039**	µg/L	0.1	µg/L
Benzo(a)pyrene	1.0	µg/L	**0.0039**	µg/L	0.1	µg/L
Benzo(b)fluoranthene	1.0	µg/L	**0.0039**	µg/L	0.1	µg/L
Benzo(k)fluoranthene	1.0	µg/L	**0.0039**	µg/L	0.1	µg/L
Chrysene	1.0	µg/L	**0.0039**	µg/L	0.1	µg/L
Dibenzo(a,h)anthracene	1.0	µg/L	**0.0039**	µg/L	0.1	µg/L
Indeno(1,2,3-cd)pyrene	1.0	µg/L	**0.0039**	µg/L	0.1	µg/L
Total Group II Polycyclic Aromatic Hydrocarbons	**100**	µg/L	---			
Naphthalene	**20**	µg/L	---			
E. Halogenated SVOCs						
Total Polychlorinated Biphenyls	**0.000064**	µg/L	---		0.5	µg/L
Pentachlorophenol	**1.0**	µg/L	---			
F. Fuels Parameters						
Total Petroleum Hydrocarbons	**5.0**	mg/L	---			

Ethanol	**Report**	mg/L	---	
Methyl-tert-Butyl Ether	70	µg/L	**20**	µg/L
tert-Butyl Alcohol	**120**	µg/L	---	
tert-Amyl Methyl Ether	**90**	µg/L	---	

Attachment D

Proposed Treatment System Information

FT-452

EZ STEP FIXED AXLE FRAC TANK
SMOOTH WALL, 500BBL

DESIGN FEATURES

- Integrated Safety Stairway
  - Easy to Inspect Top Manway
  - No Guardrails to set up or take down
  - No moving parts or pins
  - Eliminates potential for guardrails violating height restrictions
- Easy-to-clean Design Reduces Cost
  - "V"-Bottom Floor for Complete Clean-Out
  - Smooth Wall Interior for Easy Cleaning
  - No Corrugations
  - No Internal Rods

ADDITIONAL SAFETY FEATURES

- Safety stairway eliminates need for workers to get on top of tank
- Grip Strut steps to prevent slipping
- Handrails and Stairways painted safety yellow for high visibility
- Safe Operation reminder decals applied
- Attached Strapping Charts

WEIGHTS AND MEASURES

- Capacity: 520 BBL (21,840 gallons)
- Height: 11'-0" (Grade to Roof Deck)
  10'-0" (Wall)
- Width: 8'-6" (Outside)
  8'-0" (Inside)
- Length: 46'-0" (Front Nose to Rear)
  42'-0" (Tank Body)
- Weight: 29,950 lbs.

STRUCTURAL DESIGN

- Floor: ¼"thick ASTM A36 carbon steel (V-bottom)
- Sides/Ends: ¼" thick ASTM A36 carbon steel
- Main Roof: ¼" thick ASTM A36 carbon steel
- Wall Posts: 3/16"x3"x6" ASTM A36 formed channel
- Roof Members: 3" Structural Channel

FEATURES

- Manways: (3) 22" Dia. w\ Wingnut Closure Buna-N Gasket
- Relief Valve: 16 oz./in2 pressure setting, 0.4 oz./in2 vacuum setting; Buna-N seal.
- Valves: 4"- wafer butterfly valve. Cast iron body, Buna-N seat & seals, 316 SS stem, Nylon coated ductile iron disk w/plug and chain.
- Front Drain: 4"-150# flanged w\ butterfly valve
- Rear Drain: 4"-150# flanged w\ butterfly valve
- Front Feed Line: 3" w\ Cap & Chain
- Roof Connections: (1)Vapor Recovery: 4"-150# Threaded Flange & Plug (1) Auxiliary Port: 4"-150# Threaded Flange & Plug (1) Gauging Port: 2" threaded plugged port
- Stairway: 30" Bolt-On w\ Landing – OSHA Compliant
- Axle: 77½" track \ 22,500# Capacity \ 5" Rd
- Suspension: Spring \ 3-Leaf Spring \ High-Arch Flange Mount Hangers \ ¾" Seat 22,500# Capacity
- Tires: 11R22.5 \ 14-Ply
- Wheels: Steel \ Hub-Piloted

PAINT SPECIFICATIONS

- Interior Blast: SSPC-SP-10 \ Near White Blast
- Interior Coating: Carboline Phenoline 310 (100% Solids) High Performance Epoxy Coating 20 – 30 Mils D.F.T.
- Exterior Blast: SSPC-SP-6 \ Commercial Blast
- Exterior Coating: Carboline Carbothane 8812 \ 8845 DTM High Gloss Polyurethane 3 – 5 Mils D.F.T.

OPTIONS

- Steam Coil
- HD Lifting Lugs
- External Frac
- Internal Frac
- Gel Line
- Jet Line
- Float Gage
- Feed Lines
- Additional Aux. Ports
- Additional Manways
- ABS Brake System
- DOT Light Package
- Stainless Steel (340 / 316)
- Custom Interior Coatings
- Custom Exterior Colors

TESTS/CERTIFICATIONS

- Tests Performed: Hydrostatic Water Test • Electrical Function Test Brake System Test
- Warranty: 1 year Structural • 6 Months Coating

To the best of our knowledge the technical data contained herein are true and accurate at the date of issuance and are subject to change without prior notice. No guarantee of accuracy is given or implied because variations can and do exist. NO WARRANTY OR GUARANTEE OF ANY KIND IS MADE BY SABRE MFG LLC, EITHER EXPRESSED OR IMPLIED.

5420 E STATE RD 8 • KNOX, IN • 574-772-5380

MANITEX SABRE

888-772-5580
5420 E. STATE RD 8, KNOX, IN 46534
WWW.MANITEXSABRE.COM

PROUDLY MADE IN THE U.S.A.

GSP05/10/20 Sub-Prime® Electric Submersible Pumps

The GSP Sub-Prime line is a selection of portable, electric submersible dewatering pumps available for a wide range of pumping applications on construction, industrial, mining, utility, and municipal job sites. Available in 0.5 hp / 0.4 kW (GSP05), 1 hp / 0.75 kW (GSP10), and 2 hp / 1.5 kW (GSP20) models, the GSP Sub-Prime offers flow rates from 70 through 110 gpm (4.4 through 6.9 l/sec) and maximum heads from 39 to 70 feet (11.9 to 21.3 meters). Compact design allows these versatile units to go where other pumps simply would not fit. An optional piggy back single float switch can be supplied as a cost-effective choice for applications requiring automatic operation.

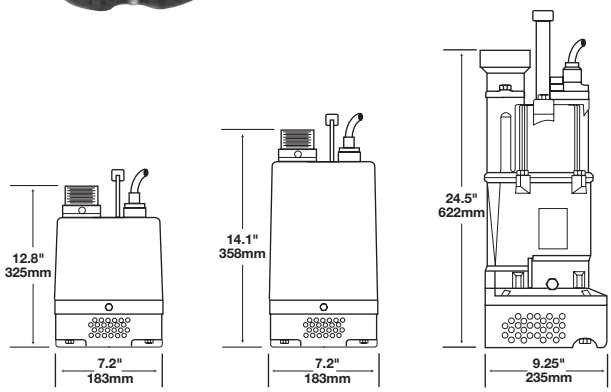

Features

- UL listed & approved *
- Dry running capability without damage
- No control panel required for starting. (Control panel is required for motor protection.)
- Portable, lightweight, durable
- Slim line top discharge design, only 7.2" (183mm) diameter for 0.5 and 1 hp (0.4 and 0.75 kW) models, 9.25" (235mm) diameter for 2 hp (1.5 kW) model
- Non-wicking cable with strain relief
- High-torque, capacitor-start motor
- Motor thermal overload protection
- Outer jacket for continuous cooling of motor
- Silicon Carbide upper and lower mechanical seals
- Triple seals — internal upper & lower mechanical seals and external lip seal
- Torque flow impeller

Specifications

	GSP05	GSP10	GSP20†
HP/kW	0.5 HP/0.4 kW	1.0 HP/.75 kW	2.0 HP/1.5 kW
Max. Flow	70 gpm (4.4 l/sec)	90 gpm (5.7 l/sec)	110 gpm (6.9 l/sec)
Max. Head	39' (11.9M)	60' (18.3M)	70' (21.3M)
Max. Solids	1/3" (9mm)	1/3" (9mm)	1/3" (9mm)
Cable Length	30' (9M)	50' (15M)	50' (15M)
Discharge Size	2" (50mm)	2" (50mm)	3" (75mm)
RPM	3600	3600	3600
Max. Fluid Temp.	90° F (32° C)	90° F (32° C)	104° F (40° C)
PH Range	6.5-8.0	6.5-8.0	6.5-8.0
Voltage	115, 230	115, 230	115/230
Amps	5.8, 3.2	10.3, 5.11	25.9/13.0
Phase	Single	Single	Single
Height	12.8" (325mm)	14.1" (358mm)	24.5" (622mm)
Width	7.2" (183mm)	7.2" (183mm)	9.25" (235mm)
Weight	20 lbs. (9 kg.)	29 lbs. (13 kg.)	61 lbs. (28 kg.)
Max. Sub.	16.5' (5M)	16.5' (5M)	16.5' (5M)

C US

godwin pumps

* n.a. for GSP20
†GSP20 CSA certification pending.

GSP Sub-Prime® Performance Curves

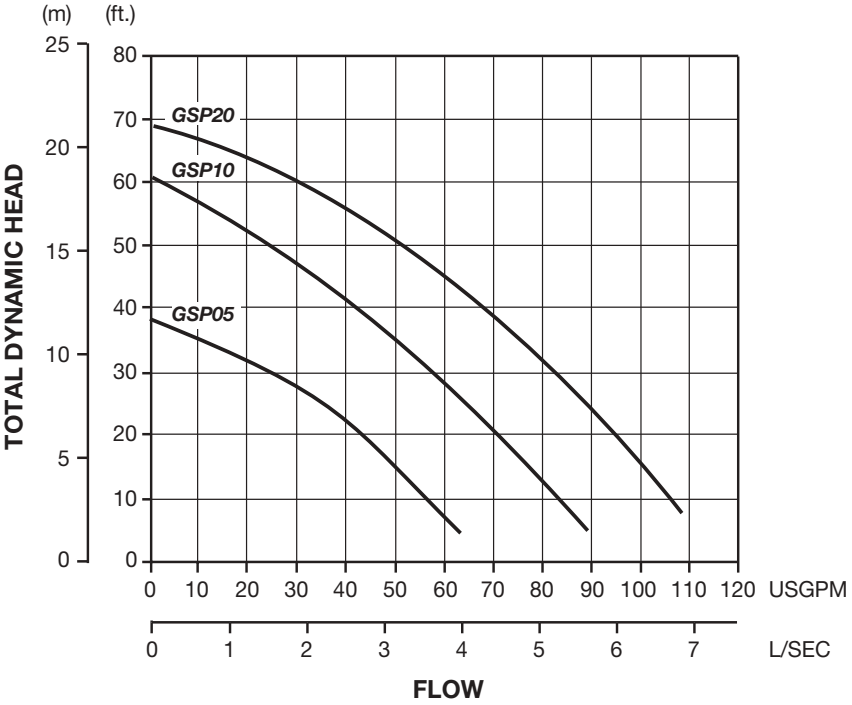

WARNING: Pumps are not designed for use in explosive atmosphere, flammable environments or for pumping volatile liquids.

Design & Construction

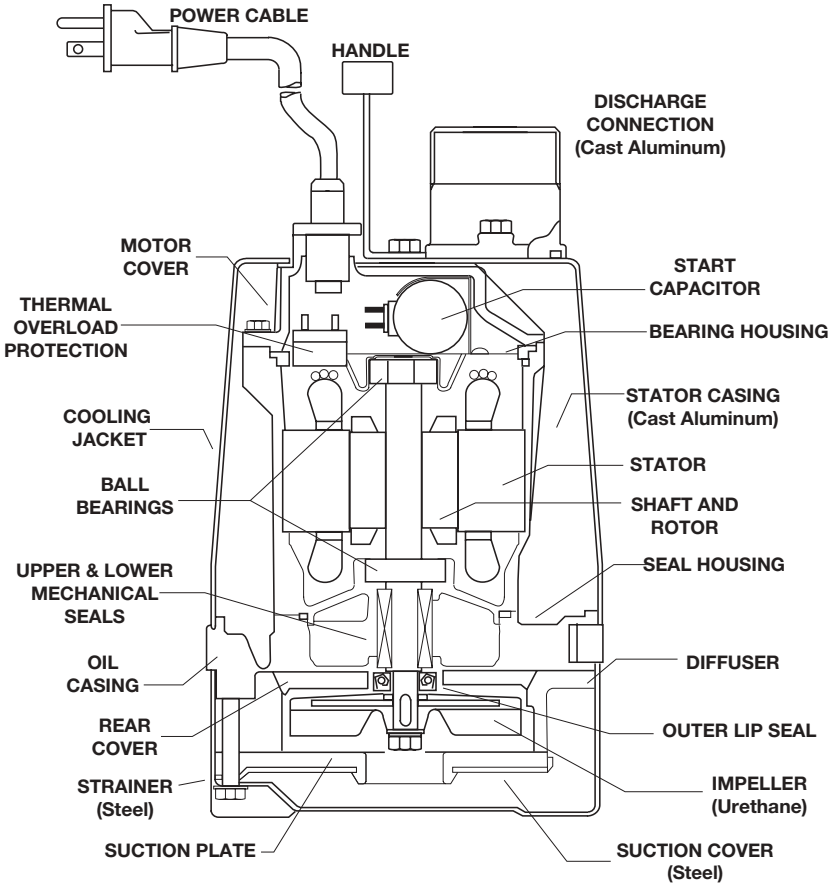

Float Switch

Optional Float Switches available for automatic, remote activation of Sub-Prime pumps. Package consists of 30'/50' (9M/15M) power cord with piggy-back power plug, variable length float tether, and sealed float. Typical configuration shown in the following.

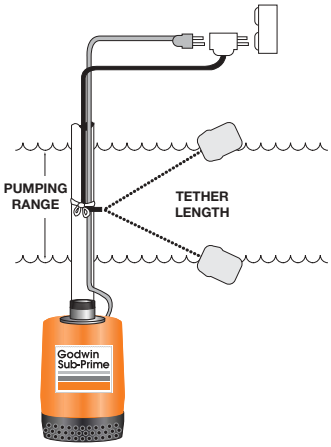

Pumping range determined by tether length according to the following guide.

Tether Length	3.5	5	7	9	11	13	15	(in.)
	89	127	178	229	279	330	381	(mm)
Pumping Range	6.5	7.5	8.5	10	11	12.5	13.5	(in.)
	165	191	216	254	279	318	343	(mm)

Pumping range based on operation in non-turbulent conditions. Actual range may vary due to temperature conditions and cord shape. Tether length increases variance of pumping range.

C US

†GSP20 CSA certification pending.

godwin pumps

One Floodgate Road, Bridgeport, NJ 08014, USA
(856) 467-3636 • Fax: (856) 467-4841

Quenington, Cirencester, Glos., GL7 5BX, UK
+44 (0)1285 750271 • Fax: +44 (0)1285 750352

E-mail: sales@godwinpumps.com
www.godwinpumps.com

BRANCH LOCATIONS:
Connecticut • Pennsylvania • New York • Ohio
Illinois • Maryland • Virginia • West Virginia
Georgia • South Carolina • North Carolina
Florida • Texas • Montana • California • Washington

Sub-Prime® and the color orange for pumps are registered trademarks of Godwin Pumps of America, Inc.
Specifications and illustrations are subject to revision without notice.
© Copyright 2002-2006 Godwin Pumps of America, Inc.

GPASL.021.206

Model 8 Basket Strainer and Bag Filters

Strainers or bag filters: Your choice!

Model 8 strainer/filter housings are made in 2 sizes and 2 pressure ratings, and can serve as basket strainers (for particle retention down to 74 micron size) or as bag filters (for particle retention down to 1 micron size). In all cases, covers are easily removed, without tools, and the basket or bag is easily cleaned or replaced.

Features

- Low pressure drops
- Permanently piped housings
- Covers are O-ring sealed
- Carbon steel, or stainless steel (304 or 316) construction for housings
- All housings are electropolished to resist adhesion of dirt and scale
- Easy to clean!
- Adjustable-height legs, standard
- Large-area, heavy-duty baskets
- O-ring seals: Buna N, EPR, Viton®, Teflon®
- ASME code stamp available
- Two pressure ratings: 150 and 300
- Duplex units are available
- Pipe sizes 3/4 thru 6-inch, NPT or flanged
- Two basket depths: 15 or 30 inches (nominal)

Options

- Sanitary construction
- Different outlet connections
- Higher pressure ratings
- Extra-length legs
- Heat jacketing
- Adapters for holding filter cartridges.
- Liquid displacers for easier servicing
- Can be fitted with an adapter to hold cartridge filter elements

Covers are secured by three eyenut assemblies. One of them acts as a hinge, when the cover is opened.

Dual Stage Straining/Filter

All Rosedale Model 8 housings can be supplied with a second, inner basket, which is supported on the top flange of the regular basket. Both baskets can be strainers (with or without wire mesh linings) or both can be baskets for filter bags. They can also be mixed: one a strainer basket, the other a filter bag basket. Dual-stage action will increase strainer or filter life and reduce servicing needs.

Choosing A Basket Strainer Or Bag Filter

Choose between straining (removing particles down to 74 micron size) or filtering a fluid (removing particles down to 1 micron). This will direct you in selecting the correct basket when ordering.

Operation

Unfiltered liquid enters the housing above the bag or basket and passes down through them. Solids are contained inside the bag or basket, where they are easily removed when the unit is serviced. A basket bail is pushed down by the closed cover to hold the basket against a positive stop in the housing. A radial seal prevents bypass of unfiltered liquid.

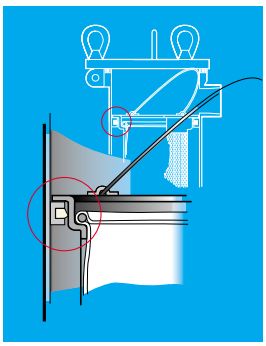

Pressure Drop Data

Basket strainers and bag filters are usually selected so that the pressure drop does not exceed 2 psi, when they are clean. Higher pressure drops may be tolerated, when contaminant loading is low. Bag change occurs at 15psid.

The pressure drop data is accurate for all housings with strainer or filter bag baskets. When filter bags are added, total pressure drop becomes the sum of the pressure drop as determined by the steps below.

Follow these easy steps:

1. *Using the desired pipe size and approximate flow rate, determine the basic pressure drop from the appropriate graph.*
2. *Multiply the pressure drop obtained in step 1 by the viscosity correction factor found in the accompanying table. This is the adjusted (clean) pressure drop for all baskets without filter bags.*
3. *Add the pressure drop for the bag.*

Note: *Filter bags are specified separately. See page 120-130.*

Basket Data

Depth Nominal (inches)	Diameter (inches)	Surface Area (sq. ft.)	Volume (cu. in.)	Bag Size No.
15	6.7	2.3	500	1
30	6.7	4.4	1000	2

	Viscosity, cps								
	1 (H_2O)	50	100	200	400	600	800	1000	2000
All unlined baskets	.65	.85	1.00	1.10	1.20	1.40	1.50	1.60	1.80
40-mesh lined	.73	.95	1.20	1.40	1.50	1.80	1.90	2.00	2.30
60-mesh lined	.77	1.00	1.30	1.60	1.70	2.10	2.20	2.30	2.80
80-mesh lined	.93	1.20	1.50	1.90	2.10	2.40	2.60	2.80	3.50
100-mesh lined	1.00	1.30	1.60	2.20	2.40	2.70	3.00	3.30	4.40
200-mesh lined	1.30	1.70	2.10	3.00	3.40	3.80	4.40	5.00	6.80

Model 8–For flow rates to 220 gpm*

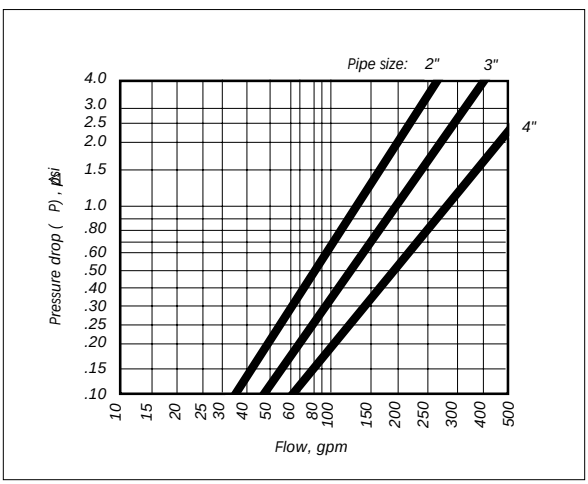

**Based on housing only. Fluid viscosity, filter bag used, and expected dirt loading should be considered when sizing a filter.*

Eyenut covers with filter bag and basket.

Dimensions (IN)

Outlet Styles

Flanged (150 lb. ANSI) | Threaded (NPT)

STYLE 1

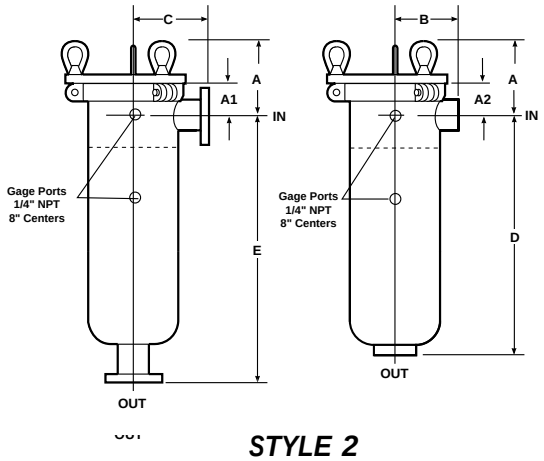

STYLE 2

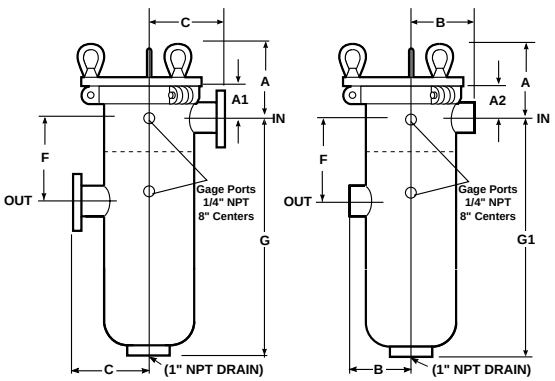

STYLE 3

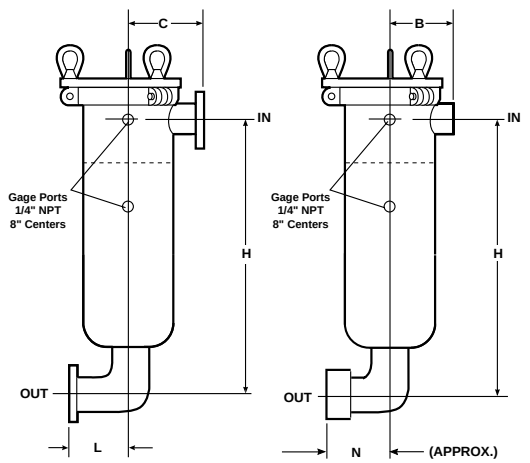

(Style 1 with customer's elbow)

Outlet Styles

Flanged (300 lb. ANSI) | Threaded (NPT)

STYLE 1

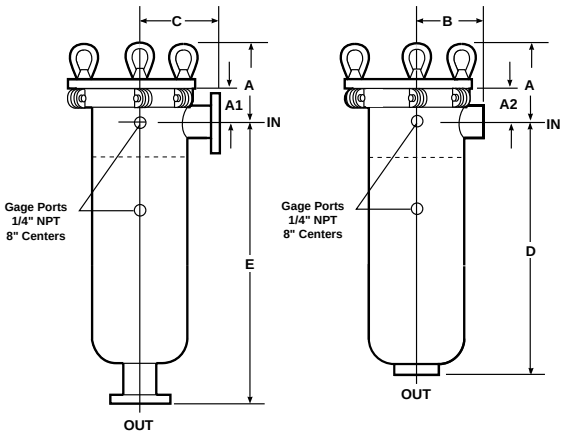

STYLE 2

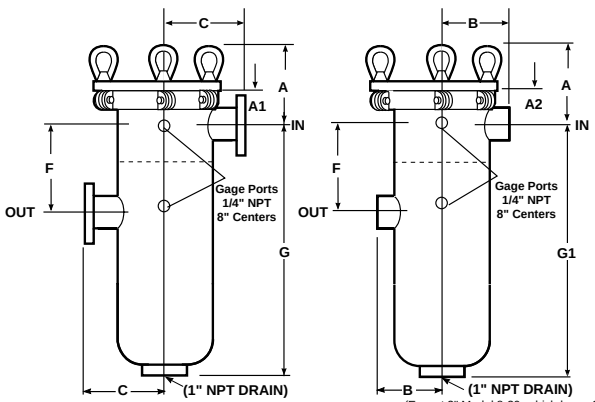

(Except 2" Model 8-30, which has a 2" drain)

STYLE 3

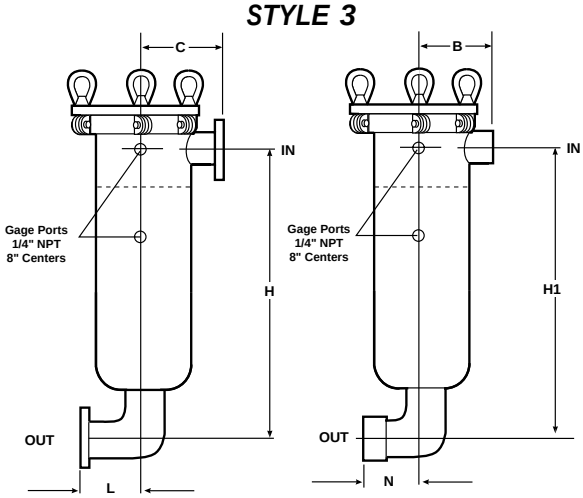

Cover Types

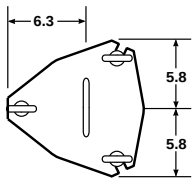

150 PSIG Design

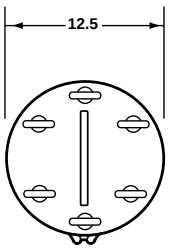

300 PSIG Design

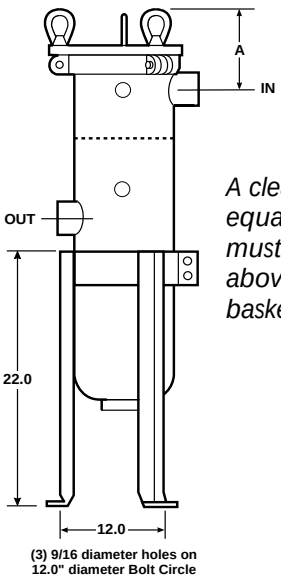

A clearance distance equal to basket depth must be available above housing for basket removal.

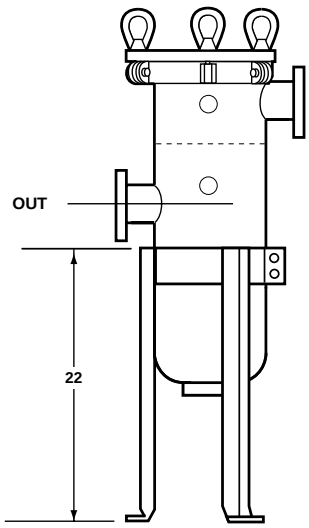

Dimensions (IN) 150 PSIG Design

Model	Pipe Size	A	A1	A2	B	C	D	E	F	G	G1	H	H1	L	N
8-15	2	6.6	2.9	2.9	5.9	7.5	21.2	23.5	4.9	21.0	21.0	23.2	23.2	5.0	4.06
	3	7.5	3.7	3.7	6.8	7.5	22.5	24.6	6.6	21.9	21.9	25.4	25.4	7.25	6.12
	4	7.5	3.7	5.0	6.8	8.6	22.5	25.1	8.4	21.9	20.6	26.8	25.6	9.0	7.75
	6	9.0	5.2	5.9	7.1	8.6	23.6	26.0	9.0	23.4	22.8	30.9	30.3	12.5	11.0
8-30	2	6.6	2.8	2.9	5.9	7.5	36.2	38.5	4.9	36.0	36.0	38.2	38.2	5.0	4.06
	3	7.5	3.7	3.7	6.7	7.5	37.5	39.6	6.6	36.9	36.9	40.4	40.4	7.25	6.12
	4	7.5	3.7	5.0	6.7	8.6	37.5	40.1	8.4	36.9	35.6	41.8	40.6	9.0	7.75
	6	9.0	5.2	5.9	7.1	8.6	38.6	41.0	9.0	38.4	37.8	45.9	45.3	12.5	11.0

Dimensions (IN) 300 PSIG Design

Model	Pipe Size	A	A1/A2	B	C	D	E	F	G/G1	H/H1	L	N
8-15	2	7.6	3.8	5.9	7.5	21.2	23.5	4.9	21.0	23.2	5.0	4.06
	3	8.9	5.0	6.8	8.6	22.5	24.6	6.6	21.9	25.4	7.25	6.12
	4	8.9	5.0	6.8	9.6	22.5	25.1	8.4	21.9	26.8	9.0	7.75
	6	10.1	6.2	6.3	10.0	23.6	26.0	9.0	23.4	30.9	12.5	11.0
8-30	2	7.6	3.8	5.9	7.5	36.0	38.5	4.9	36.0	38.2	5.0	4.06
	3	8.9	5.0	6.8	7.5	36.7	39.6	6.6	36.9	40.4	7.25	6.12
	4	8.9	5.0	6.8	8.6	36.5	40.1	8.4	36.9	41.8	9.0	7.75
	6	10.1	6.2	7.1	8.6	38.6	41.0	9.0	38.4	45.9	12.5	11.0

How To Order

Build an ordering code as shown in the example

Example: 8-15-3P-1-150-C-B-S-M-200-D-C - 2M 50

HOUSING — OPTIONS — OPTIONAL INNER BASKET

MODEL NO.
8 = **8**

HOUSING SIZE
15 inch = **15**
30 inch = **30**

PIPE SIZE, NPT and FLANGED[1]
3/4-in. female NPT = **3/4P**
1-in. female NPT = **1P**
1-1/4-in. female NPT = **1-1/4P**
1-1/2-in. female NPT = **1-1/2P**
2-in. female NPT = **2P**
3-in. female NPT = **3P**
3/4-in. 150 class ANSI flange = **3/4F**
1-in. 150 class ANSI flange = **1F**
1-1/4-in. 150 class ANSI flange = **1-1/4F**
1-1/2-in. 150 class ANSI flange = **1-1/2F**
2-in. 150 class ANSI flange = **2F**
3-in. 150 class ANSI flange = **3F**
4-in. 150 class ANSI flange = **4F**
6-in. 150 class ANSI flange = **6F**

OUTLET STYLE
Bottom = **1**
Side = **2**
Bottom elbow = **3**

PRESSURE RATING[2]
150 psi (NPT or flanged) = **150**
300 psi (NPT or flanged) = **300**

HOUSING MATERIAL
Carbon steel = **C**
304 stainless steel = **S**
316 stainless steel = **S316**

COVER SEAL
Buna N = **B**
Ethylene Propylene = **E**
Viton® Fluoroelastomer = **V**
Teflon® Encapsulated Viton® (6 Bolt Cover) = **TEV**
Teflon® (solid white) = **TSW**

BASKET SEAL
Seal required = **S**

FOR MODEL 8 ONLY

OPTIONAL INNER BASKET, MEDIA SIZE-No symbol if type 2B basket was selected

Perforation diameters (for type 2P baskets)
1/4, 3/16, 9/64, 3/32, 1/16

Mesh sizes (for type 2M and 2BM baskets)20, 30, 40, 50, 60, 70, 80, 100, 150, 200

OPTIONAL INNER BASKET TYPE
2B = Filter bag basket, 9/94 perforations[3]
2P = Strainer basket, perforated metal
2BM = Filter bag basket, perforated, mesh lined[3]
2M = Strainer basket, perforated, mesh lined

ASME CODE STAMP
C = Code

DISPLACER
D = Displacer

BASKET, MEDIA SIZE-No symbol if type B basket was selected
Perforation diameters (for type P baskets)
1/4, 3/16, 9/64, 3/32, 1/16

Mesh sizes (for type M and BM baskets)
20, 30, 40, 50, 60, 70, 80, 100, 150, 200

BASKET TYPE
PB = Filter bag basket, 9/64 perforations[3]
P = Strainer basket, perforated metal
BM = Filter bag basket, perforated, mesh lined[3]
M = Strainer basket, perforated, mesh lined
HWM = Filter bag basket, heavy wire mesh[3]

NOTE:
1. Flanges provided with the housing match the pressure rating of the vessel. Housings rated 150 psi have 150 class flanges. Housings rated 300 psi have 300 class flanges. ANSI B16.5 Pressure-Temperature rating tables determine flange class for ASME code housings. Consult factory.
2. Higher pressure ratings available. Consult factory.
3. Filter bags are specified separately. See page 120-130.
4. 150 psi unit has 150 class flanges. 300 psi unit has 300 class flanges.

410-721-3
3733

CALGON
CALGON CARBON CORPORATION

Making Water and Air Safer and Cleaner

PROTECT™ TW SERIES

Description

The Protect™ TW series vessels are economical, moderate pressure vessels capable of operating at pressures as high as 75 psi and temperatures up to 140°F. The TW vessels contain from 500 to 2,000 pounds of activated carbon or 18 to 72 ft^3 of other granulated media.

Important Features

- Durable carbon steel construction
- Hydrotested to greater than maximum operating pressure
- Chemical resistant internal lining and rust-inhibitive epoxy/urethane exterior finish
- 12″ x 16″ elliptical manway
- Lower PVC laterals positioned for maximum carbon utilization eliminates the need for a media support bed
- Upper PVC distribution laterals allow for backwashing or upflow operation
- Low profile design
- Lifting lugs and forklift guides for portability

Pressure Drop Curve

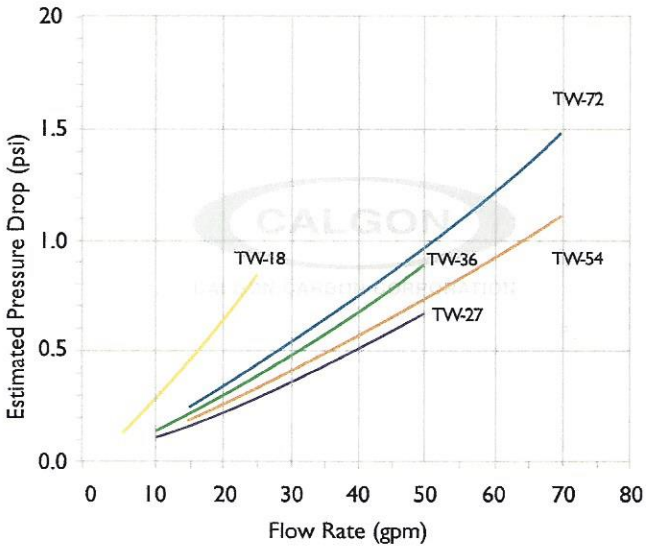

Estimated pressure drop based on 8x30 mesh carbon.

Model Number	TW-18	TW-27	TW-36	TW-54	TW-72
Carbon, lbs.*	500	750	1,000	1,500	2,000
Carbon, ft^3	18	27	36	54	72
Recomended Flow Rate, gpm (max)	35	70	70	90	90
Weight, lbs.					
Empty	50	760	760	1,060	1,060
Operating	1,000	1,510	1,760	2,560	3,060

*Estimated weight based on vessel volume.

1-508-285-9406

LIQUID STEEL
MID-PRESSURE SERIES
MODEL #LSMP

Carbon Filtration Systems Inc.

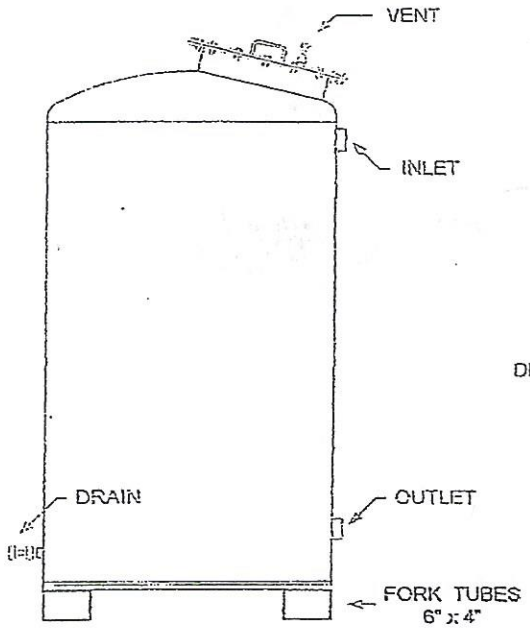

ELEVATION VIEW
NOT TRUE ORIENTATION

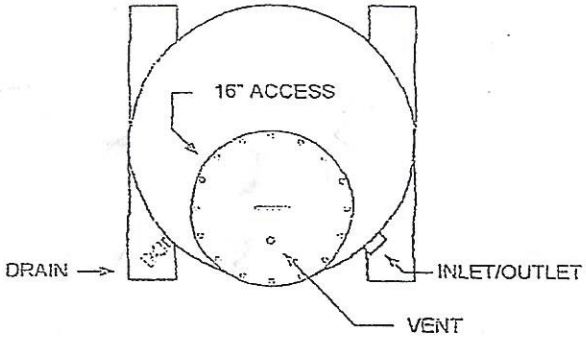

PLAN VIEW
TRUE ORIENTATION

Please Note: LSMP-250 has 8" flanged access not 16"
LSMP-250 fork tubes are optional

LSMP SERIES STANDARD DIMENSIONS

Model: LSMP	250	500	1000	2000	3000	5000	10000
Overall Height	3'11"	5'3"	6'5"	7'x7"	7'10"	9'0"	9'4"
Footprint	2'x 2'	2'6"x2'6"	3'x 3'	4'x 4'	5'x 5'	6'x 6'	8'x 8'
Diameter	24"	30"	36"	48"	60"	72"	96"
Inlet/Outlet (FNPT)	2"	2"	2"	3"	3"	4"	6"
Drain/Vent (FNPT)	OPT	½"/ ¼"	½"/ ¼"	¾"/ ½"	1"/ ½"	1 ½"/ ¾"	2"/1"
GAC Fill (Lbs.)	250	500	1,000	2,000	3,000	5,000	10,000
Shipping Weight (Lbs.)	415	875	1,500	2,925	4,375	7,300	13,150
Operational Weight (Lbs.)	850	1,765	3,100	6,400	9,875	16,550	29,050

68 Mill Street · Johnston, Rhode Island 02919 · Phone: (401) 946-7838 or (401) 946-4847 · Fax: (401) 946-9722

Propeller

Flowmeter

Technology

McPropeller

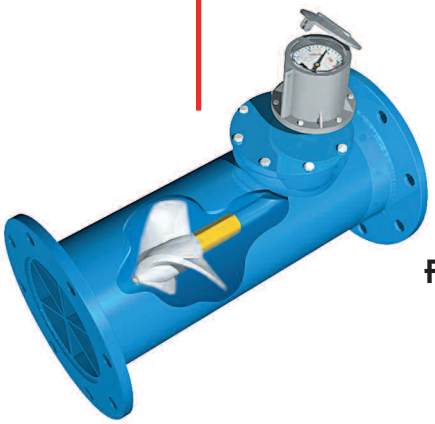

For the Real World.

McCROMETER

The Flow Measurement Specialists

Propeller Flowmeters

Long-lasting Stainless Steel Ball Bearings. *Factory lubricated and protected from flow stream.*

Epoxy-Coated Carbon Steel Body. *All stainless steel construction available.*

Straightening Vanes. *For optimum flow profiles.*

Corrosion-Resistant Impeller. *Made of durable polymer material, factory calibrated to retain accuracy.*

Magnetic Coupling System. *Isolates register and drive system from flow and allows unrestricted impeller movement.*

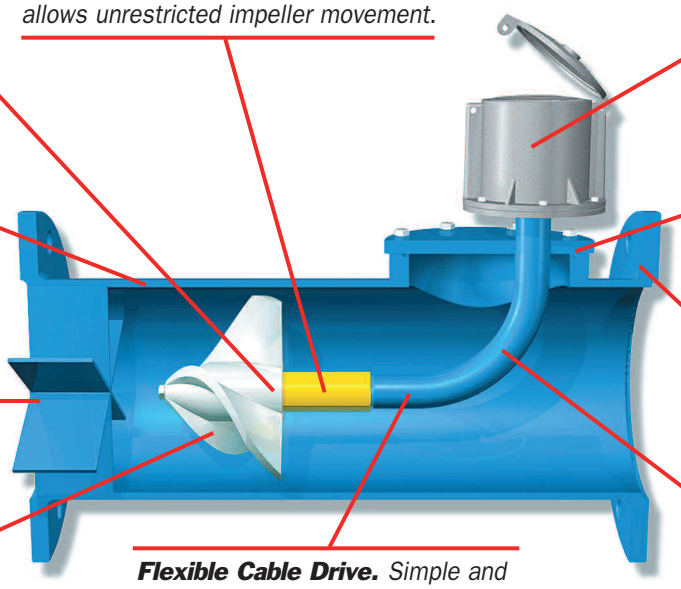

Flexible Cable Drive. *Simple and durable, protected by self-lubricating cable guide.*

Instantaneous Flowrate Indicator and Totalizer. *Housed in a Die-Cast Aluminum Register Canopy.*

Removable Top-Plate Assembly. *Available on many models for easy access during field service or replacement.*

Wide Variety of End Fittings. *Including threaded, grooved-end, flanged, and weld-on.*

Heavy Gauge Stainless Steel Support. *Resists corrosion.*

The Most Proven, Dependable Choice

McCrometer offers a complete line of dependable and economical propeller flowmeters for the widest range of applications—from fire hydrant testing to effluent management to farm irrigation. Designed to operate in real-world environments, these flowmeters can measure turbulent flows and fluids containing debris, suspended solids, and other contaminants with an accuracy superior to other technologies.

McCrometer's Mc Propeller flowmeters offer a simple and efficient design. They are easy to install, use, and maintain. After over 50 years of installations, it's no wonder these economical workhorses remain the number one choice for so many water management applications.

Self-Cleaning, Durable Design

Key to the success of McCrometer's Mc Propeller flowmeters is a self-cleaning design that prevents the build-up of solids. A unique, magnetic coupling system keeps the register

FIRE HYDRANT FLOWMETER M1104

- Lightweight, portable design
- Instantaneous readings

BOLT-ON SADDLE FLOWMETER MO300

- 4″ to 16″ line sizes

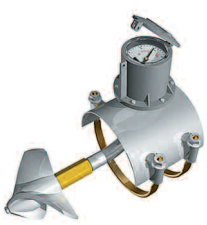

LARGE-LINE, BOLT-ON SADDLE FLOWMETER M1400

- 18″ to 48″ line sizes

BOLT-ON SADDLE SURFACE WATER FLOWMETER M0300SW

- 4″ to 12″ line sizes

OPEN FLOWMETER M1700

- 10″ to 72″ and larger line sizes

The McCrometer Mc Propeller flowmeter's self-cleaning design uses a flexible drive shaft running within a curved, stainless steel "ell" that makes it easier to shed debris.

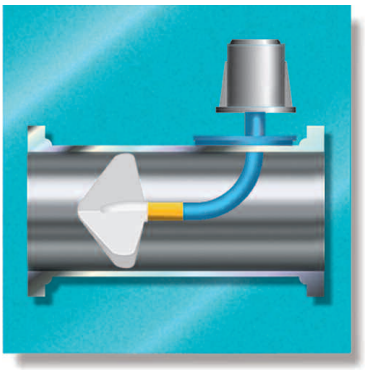

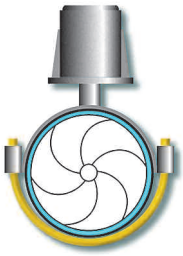

The positioning of the impeller directly in the flow stream assures full-flow measurement and greater accuracy.

The McCrometer Propeller flowmeter comes with a standard instantaneous flowrate indicator and straight-reading totalizer. An optional electronic FlowCom register is also available.

six-digit, straight-reading totalizer. They are available in gallons, cubic feet, acre feet, cubic meters and other standard measurements. Both mechanical and electronic registers are available.

Accuracy for Challenging Environments

McCrometer's Mc Propeller flowmeters operate in a wide variety of environments without damage or loss of accuracy. They deliver ±2% of true accuracy and ±.25% repeatability over a flowrange of up to 25 to 1. Whether measuring clean or dirty fluids, McCrometer's Mc Propeller flowmeters excel in measuring turbulent flows, and their built-in versatility makes them ideal for retrofits.

Options to Meet a Wide Range of Needs

McCrometer's Mc Propeller flowmeters come in a variety of standard style configurations—including bolt-on saddle meter, open flow meter, and precision tube—and with a host of options for custom requirements. They offer exceptional sizing flexibility, and can be sized for line diameters of 2″ to 96″ and larger.

MAIN LINE FLOWMETER MW500/MZ500

- 2″ to 24″ or larger line sizes

IRRIGATION-FLANGED FLOWMETER ML100

- 6″ to 12″ line sizes

GROOVED AND SMOOTH-END FLOWMETER MG100/MS100

- 2″ to 24″ line sizes

ALL STAINLESS STEEL MAIN LINE FLOWMETER QW500/QZ500

- 2″ to 24″ line sizes

Proven performance.

and drive isolated from the flow while permitting unrestricted movement of the impeller. Free rotation of the impeller also is assured by factory-lubricated, stainless steel bearings.

The high-impact plastic impeller will not flex or otherwise change in dimension. In fact, it maintains its shape and accuracy over the lifetime of the meter. The impeller also is corrosion and erosion resistant, enabling McCrometer's Mc Propeller flowmeters to operate safely in rugged environments.

Easy to Use and Maintain

McCrometer's Mc Propeller flowmeters install easily and require little maintenance. All their components are easily serviced in the field. The register is driven by a flexible steel cable. The register can also be extended topward for easy reading in confined spaces.

Instantaneous Flow Rate Indicator & Straight-Reading Totalizer: Standard

Registers have an instantaneous rate of flow indicator and

THREADED-END FLOWMETER MT100

- 2″ to 6″ line sizes

WELD-ON SADDLE FLOWMETER MW600

- 4″ to 48″ or larger line sizes

RIGHT ANGLE FLOWMETERS MW800/MM800

- 3″ to 24″ line sizes

MAIN LINE FLOWMETER MW900/MG900/MT900

- 2″ to 24″ or larger line sizes
- Smooth, grooved, or threaded ends

FLANGED-END FLOWMETER MF100

- 2″ to 12″ line sizes

Proven performance.

Engineered for Accuracy, Durability, and Economy for…

Municipal Water/Wastewater

and

Agriculture/Turf Irrigation

McCrometer's Mc Propeller flowmeters measure both flow rate and volume, using turbine technology and a helical shaped impeller. The flowmeter consists of a rotating device, an impeller, positioned in the flow stream. When fluid passes through the meter, it contacts the impeller, causing it to spin. The impeller's rotational velocity is directly proportional to the velocity of the flow. The rotation is translated through a magnetic coupling and flexible drive system to the register. The register automatically calculates the flow rate by multiplying the flow velocity with the cross-sectional area of the meter tube.

The register incorporates an instantaneous flowrate indicator and straight-reading totalizer. The flowrate and total flow may be indicated in virtually any unit of measurement such as U.S. gallons or liters.

Potable water

•

Drip and sprinkler irrigation

•

Wastewater management

•

Water well production

•

Marine system testing

•

Fire sprinkler testing

•

Pumping stations

•

Golf courses and park water management

•

Truck loading and discharge

•

Canal laterals

•

Center pivot systems

McCrometer

Application

Support

At McCrometer, all we make are flowmeters. We have over 50 years of flow measurement experience in municipal, industrial, and agricultural markets.
Our knowledgeable staff can accurately evaluate your flow applications and specify the best metering technology for your specific flow condition. For a free evaluation of your flow application or to find out about our other flowmeter products, contact your McCrometer representative today, or visit our website at **www.mccrometer.com**

Instrumentation Options For Remote Display & Control

McCrometer's Electronic instrumentation is specifically designed for use on all McCrometer Mc Propeller flowmeters, allowing the flow data generated by the flowmeter to be transmitted and incorporated into flow monitoring and control systems. This instrumentation can be ordered along with the flowmeters or retrofitted to any existing McCrometer Mc Propeller flowmeter.

Transmitters

Transmitters can be easily installed on all new or existing McCrometer Mc Propeller flowmeters to provide a variety of signal outputs to flow computers, irrigation controllers, electronic and electromechanical totalizers, chart recorders, Programmable Logic Controllers (PLCs), and computerized data acquisition systems.

Standard signal outputs available:

- Linear 4-20 mA
- Dual forward and reverse 4-20 mA (separate signal for forward and reverse flows)
- Digital 0-12 volt pulse
- Dry Contact Relay
- Open-Collector

Electronic Registers

These battery-powered FlowCom registers come with LCD Rate of Flow and Total Flow displays. They replace the mechanical register and can be mounted directly on the propeller flowmeter or in a remote enclosure. These registers are field programmable and have optional 4-20 mA and pulse outputs.

Flow Computers

Remote mounted microprocessors display both rate of flow and total flow. These flow computers are easily field programmable and can include control features such as high and low alarm set points, control and alarm outputs, relay outputs, RS-485 serial communications ports and 4-20 mA outputs.

Chart Recorders

McCrometer Chart Recorders are remote, microprocessor-based, circular chart recorders for monitoring and permanent recording of flowrate information. They use a thermal printing stylus to draw charts on blank paper. Chart Recorders are available with both 24-hour and 7-day charts. Recorders are also available with 4-20 mA control outputs.

McCROMETER
The Flow Measurement Specialists

3255 West Stetson Avenue, Hemet, CA 92545 USA
Tel: 951-652-6811 • FAX: 951-652-3078
www.mccrometer.com

Lit #24519-13 Rev 1.6/07-08

© 1996-2008 by McCrometer, Inc./Printed in U.S.A.

Attachment E

US FWS IPaC Report

United States Department of the Interior

FISH AND WILDLIFE SERVICE
New England Ecological Services Field Office
70 Commercial Street, Suite 300
Concord, NH 03301-5094
Phone: (603) 223-2541 Fax: (603) 223-0104
http://www.fws.gov/newengland

In Reply Refer To: July 02, 2018
Consultation Code: 05E1NE00-2018-SLI-2263
Event Code: 05E1NE00-2018-E-05287
Project Name: 399 Northampton Road

Subject: List of threatened and endangered species that may occur in your proposed project location, and/or may be affected by your proposed project

To Whom It May Concern:

The enclosed species list identifies threatened, endangered, proposed and candidate species, as well as proposed and final designated critical habitat, that may occur within the boundary of your proposed project and/or may be affected by your proposed project. The species list fulfills the requirements of the U.S. Fish and Wildlife Service (Service) under section 7(c) of the Endangered Species Act (Act) of 1973, as amended (16 U.S.C. 1531 *et seq.*).

New information based on updated surveys, changes in the abundance and distribution of species, changed habitat conditions, or other factors could change this list. Please feel free to contact us if you need more current information or assistance regarding the potential impacts to federally proposed, listed, and candidate species and federally designated and proposed critical habitat. Please note that under 50 CFR 402.12(e) of the regulations implementing section 7 of the Act, the accuracy of this species list should be verified after 90 days. This verification can be completed formally or informally as desired. The Service recommends that verification be completed by visiting the ECOS-IPaC website at regular intervals during project planning and implementation for updates to species lists and information. An updated list may be requested through the ECOS-IPaC system by completing the same process used to receive the enclosed list.

The purpose of the Act is to provide a means whereby threatened and endangered species and the ecosystems upon which they depend may be conserved. Under sections 7(a)(1) and 7(a)(2) of the Act and its implementing regulations (50 CFR 402 *et seq.*), Federal agencies are required to utilize their authorities to carry out programs for the conservation of threatened and endangered species and to determine whether projects may affect threatened and endangered species and/or designated critical habitat.

A Biological Assessment is required for construction projects (or other undertakings having similar physical impacts) that are major Federal actions significantly affecting the quality of the human environment as defined in the National Environmental Policy Act (42 U.S.C. 4332(2)(c)). For projects other than major construction activities, the Service suggests that a biological evaluation similar to a Biological Assessment be prepared to determine whether the project may affect listed or proposed species and/or designated or proposed critical habitat. Recommended contents of a Biological Assessment are described at 50 CFR 402.12.

If a Federal agency determines, based on the Biological Assessment or biological evaluation, that listed species and/or designated critical habitat may be affected by the proposed project, the agency is required to consult with the Service pursuant to 50 CFR 402. In addition, the Service recommends that candidate species, proposed species and proposed critical habitat be addressed within the consultation. More information on the regulations and procedures for section 7 consultation, including the role of permit or license applicants, can be found in the "Endangered Species Consultation Handbook" at:

http://www.fws.gov/endangered/esa-library/pdf/TOC-GLOS.PDF

Please be aware that bald and golden eagles are protected under the Bald and Golden Eagle Protection Act (16 U.S.C. 668 *et seq.*), and projects affecting these species may require development of an eagle conservation plan (http://www.fws.gov/windenergy/eagle_guidance.html). Additionally, wind energy projects should follow the wind energy guidelines (http://www.fws.gov/windenergy/) for minimizing impacts to migratory birds and bats.

Guidance for minimizing impacts to migratory birds for projects including communications towers (e.g., cellular, digital television, radio, and emergency broadcast) can be found at: http://www.fws.gov/migratorybirds/CurrentBirdIssues/Hazards/towers/towers.htm; http://www.towerkill.com; and http://www.fws.gov/migratorybirds/CurrentBirdIssues/Hazards/towers/comtow.html.

We appreciate your concern for threatened and endangered species. The Service encourages Federal agencies to include conservation of threatened and endangered species into their project planning to further the purposes of the Act. Please include the Consultation Tracking Number in the header of this letter with any request for consultation or correspondence about your project that you submit to our office.

Attachment(s):

- Official Species List

Official Species List

This list is provided pursuant to Section 7 of the Endangered Species Act, and fulfills the requirement for Federal agencies to "request of the Secretary of the Interior information whether any species which is listed or proposed to be listed may be present in the area of a proposed action".

This species list is provided by:

New England Ecological Services Field Office
70 Commercial Street, Suite 300
Concord, NH 03301-5094
(603) 223-2541

Project Summary

Consultation Code: 05E1NE00-2018-SLI-2263

Event Code: 05E1NE00-2018-E-05287

Project Name: 399 Northampton Road

Project Type: ** OTHER **

Project Description: Remove and replace 3 existing USTs at a retail petroleum service station located at 399 Northampton Road in Amherst, MA. The project is expected to take approximately 1 month.

Project Location:

Approximate location of the project can be viewed in Google Maps: https://www.google.com/maps/place/42.36606872192028N72.53524651745272W

Counties: Hampshire, MA

Endangered Species Act Species

There is a total of 2 threatened, endangered, or candidate species on this species list.

Species on this list should be considered in an effects analysis for your project and could include species that exist in another geographic area. For example, certain fish may appear on the species list because a project could affect downstream species.

IPaC does not display listed species or critical habitats under the sole jurisdiction of NOAA Fisheries[1], as USFWS does not have the authority to speak on behalf of NOAA and the Department of Commerce.

See the "Critical habitats" section below for those critical habitats that lie wholly or partially within your project area under this office's jurisdiction. Please contact the designated FWS office if you have questions.

---

1. NOAA Fisheries, also known as the National Marine Fisheries Service (NMFS), is an office of the National Oceanic and Atmospheric Administration within the Department of Commerce.

Mammals

NAME	STATUS
Northern Long-eared Bat *Myotis septentrionalis* No critical habitat has been designated for this species. Species profile: https://ecos.fws.gov/ecp/species/9045	Threatened

Flowering Plants

NAME	STATUS
Small Whorled Pogonia *Isotria medeoloides* No critical habitat has been designated for this species. Species profile: https://ecos.fws.gov/ecp/species/1890	Threatened

Critical habitats

THERE ARE NO CRITICAL HABITATS WITHIN YOUR PROJECT AREA UNDER THIS OFFICE'S JURISDICTION.

Attachment F

Historic Properties Information

Massachusetts Cultural Resource Information System
MACRIS

MACRIS Search Results

Search Criteria: Town(s): Amherst; Street Name: Northampton Rd; Resource Type(s): Area, Building, Burial Ground, Object, Structure;

Inv. No.	Property Name	Street	Town	Year
AMH.325		Northampton Rd	Amherst	c 1900
AMH.716	Chi Psi Fraternity House	Northampton Rd	Amherst	c 1923
AMH.934		Northampton Rd	Amherst	c 1870
AMH.282	Phi Delta Theta Fraternity House	32 Northampton Rd	Amherst	c 1913
AMH.283	Nash House	39 Northampton Rd	Amherst	c 1870
AMH.284		49 Northampton Rd	Amherst	c 1850
AMH.285	Fairchild, Edwin C. - Pease, Fannie House	50 Northampton Rd	Amherst	c 1852
AMH.286	Seligman House	67 Northampton Rd	Amherst	c 1920
AMH.287	Blair, Lewis and Florence House	70 Northampton Rd	Amherst	r 1880
AMH.1246	Smith, Obed F. - Blair, Lewis Carriage Barn	70 Northampton Rd	Amherst	r 1898
AMH.291	Hawley House	78 Northampton Rd	Amherst	c 1790
AMH.292		86 Northampton Rd	Amherst	c 1900
AMH.293		96 Northampton Rd	Amherst	c 1900
AMH.294	Hunt, Oliver D. House	99 Northampton Rd	Amherst	c 1860
AMH.295	Irish, Dr. P. E. House	104 Northampton Rd	Amherst	c 1850
AMH.296	Dickinson, O. D. House	117 Northampton Rd	Amherst	c 1870
AMH.300		126 Northampton Rd	Amherst	c 1880
AMH.301		155 Northampton Rd	Amherst	c 1900
AMH.302		163 Northampton Rd	Amherst	c 1900
AMH.318		179 Northampton Rd	Amherst	c 1900
AMH.319	Newport, Dwight House	193 Northampton Rd	Amherst	c 1910
AMH.1097	Newport, Edward House	199 Northampton Rd	Amherst	c 1910
AMH.1098	Jenkins, William House	203 Northampton Rd	Amherst	c 1910
AMH.1099	Whalen, Richard House	212 Northampton Rd	Amherst	c 1920
AMH.320		215 Northampton Rd	Amherst	c 1900
AMH.321		221 Northampton Rd	Amherst	c 1900
AMH.322		227 Northampton Rd	Amherst	c 1900

Inv. No.	Property Name	Street	Town	Year
AMH.323	Till, Robert E. House	235 Northampton Rd	Amherst	c 1920
AMH.1100	Ward, Ralph H. House	240 Northampton Rd	Amherst	c 1894
AMH.1101	Brooks, Charles A. House	241 Northampton Rd	Amherst	c 1920
AMH.1102	Avery, Amos House	247 Northampton Rd	Amherst	c 1920
AMH.1103	Rabinski, Adam House	250 Northampton Rd	Amherst	c 1920
AMH.1104	Matuszko, Stanley E. House	255 Northampton Rd	Amherst	c 1920
AMH.324		260 Northampton Rd	Amherst	c 1870
AMH.1105	Rowell, Anthony M. House	263 Northampton Rd	Amherst	c 1955
AMH.1106		271 Northampton Rd	Amherst	c 1900
AMH.1107		290 Northampton Rd	Amherst	c 1950
AMH.326		306 Northampton Rd	Amherst	c 1900
AMH.327		313 Northampton Rd	Amherst	c 1900
AMH.328		324 Northampton Rd	Amherst	c 1900

Massachusetts Cultural Resource Information System
MACRIS

MHC Home | MACRIS Home

Results

Get Results in Report Format
PDF Spreadsheet

Below are the results of your search, using the following search criteria:
Town(s): Amherst
Street No: 399
Street Name: Northampton Rd
Resource Type(s): Area, Building, Burial Ground, Object, Structure

For more information about this page and how to use it, click here

No Results Found.

New Search | New Search – Same Town(s) | Previous

MHC Home | MACRIS Home