NORTHEAST, INC.
Environmental Engineering
Geotechnical Engineering
Water Resources
Hydrogeology

February 24, 2015
Project No. 5198J

U.S. Environmental Protection Agency
5 Post Office Square, Suite 100
Mail Code OEP06-4
Boston, MA 02109-3912

Attention: Remediation General Permit NOI Processing

RE: Notice of Intent
NPDES Remediation General Permit
Broad Street Parkway South - Nashua Canal Outfall
Nashua, New Hampshire

Dear Sir or Madam:

On behalf of Continental Paving, Inc. (CPI), HTE Northeast, Inc. (HTE) has prepared this Notice of Intent (NOI) under the National Pollutant Discharge Elimination System (NPDES) Remediation General Permit (RGP), New Hampshire General Permit (NHG91000). This NOI has been prepared in general accordance with the requirements of the NPDES RGP under Federal Register, Vol. 75, No 174, and related guidance documentation provided by the EPA. The completed NOI form is attached.

Site Information

This NOI has been prepared for the management of dewatering operations during the construction of the new Nashua Canal outfall and associated piping. The site is located south of the Nashua River in Nashua, New Hampshire. Refer to Figure 1 which depicts the general layout within an historic mill area setting.

The storm water sewer installation will consist of the excavation soil to install a 42” diameter drain line from a newly constructed intake structure at the east end of the Nashua Canal to a new outfall on the Nashua River located near the western terminus of Spine Road, (Refer to Figures 2 and 3).

Contaminants in the groundwater, based on recent analyses, include volatile organic compounds (VOCs), Polycyclic Aromatic Hydrocarbons (PAHs), and dissolved metals.

2 Cote Lane, Suite 1
Bedford, New Hampshire
Telephone: (603) 668-1654 • Fax: (603) 668-0608

Discharge and Receiving Water Information

The volume of water requiring treatment is largely dependent on the size of the open excavation, duration of activities and ambient groundwater levels. It is anticipated that the excavation will be conducted during the construction season of 2015.The maximum groundwater flow is estimated to be 20 gallons per minute based on the existing silty sand material and expected groundwater levels. Additional flow to the system will come from stormwater that will need to be managed during the work.

The water collected during construction dewatering activities is expected to contain VOCs, PAHs, and metals (such as Arsenic, Lead, Copper, Zinc and Iron) and possibly other contaminants generally associated with urban fill. In January of 2015 a representative from HTE Northeast collected a groundwater sample from an existing monitoring well near the proposed outfall excavation (identified herein as MW-P99, after the adjacent drainage note on construction plans). This sample was analyzed for the parameters required under the NPDES RGP. Additionally in July of 2013, Sanborn Head Associates collected a sample from an existing monitoring well near the new canal intake structure (identified herein as TP-111A). This sample was also analyzed for the parameters required under the NPDES RGP. Analytical data is included in Attachment B of the NOI for this RGP.

The collected water will be treated to remove suspended solids, iron, and organic compounds prior to discharge via the treatment system shown on the Groundwater Treatment System Schematic (Figure 4). The treated water will then be discharged via surface piping to the Nashua River (refer to Figure 3).

Endangered Species Act Review

The New Hampshire Heritage Bureau (NHHB) completed a review for Listed Endangered Species and Critical Habitat for the entire Broad Street Parkway project, of which the outfall structure is a part. Although NHHB found that certain species and habitat were located near the entire project area, the information provided by NHHB indicates that there are no endangered species or critical habitat at the discharge location. A copy of the NHHB's finding from the Construction Specification of the Broad Street Parkway is included in Attachment D of the NOI for this RGP.

National Historic Preservation Act Review

The project new construction and/or the demolition or the rehabilitation of existing structures or facilities and historic properties are not affected by the discharge or indentified in the path of the discharges regulated by this permit and are not identified where installation or construction of treatment systems or BMPs to control such discharges (e.g, diversion channels or retention ponds) are planned.

Coverage Under NPDES RGP

It is our opinion that the proposed discharge is eligible for coverage under the NPDES RGP based on the requirements of the NPDES RGP and our evaluation of the available site-specific information. On behalf of Continental Paving, Inc. we are requesting coverage under the NPDES RGP for discharge of treated dewatering effluent during construction activities to the surface waters of the Nashua River directly via surface piping.

The enclosed NOI form provides the required information on the general site conditions, discharge, treatment system, receiving water, and Endangered Species Act and National Historic Preservation Act criteria.

Please do not hesitate to contact the undersigned should you have any questions or if we can be of further assistance.

Very truly yours,

HTE NORTHEAST, INC.

Erich A. Adler, EIT
Project Manager

Charles E. Teale, PE, LSP, LEP
Principal

Attachments: NOI for the RGP

cc: Continental Paving, Inc – Mr. Jerry Maher, Mr. Steve Chabot
NHDES – Water Division, Wastewater Engineering Bureau
City of Nashua – Public Works Division

B. Suggested Form for Notice of Intent (NOI) for the Remediation General Permit

1. General facility/site information. Please provide the following information about the site:

a) Name of **facility/site**: Broad Street Parkway South		**Facility/site** mailing address:			
Location of **facility/site**: longitude: -71.476162 latitude: 42.760307	Facility SIC code(s): 1622	Street: Broad Street Parkway South Nashua Canal Outlet Alignment			
b) Name of **facility/site owner:**		Town: Nashua			
Email address of facility/site owner: City of Nashua - Public Works Division - fauteuxl@nashuanh.gov		State: New Hampshire	Zip: 03064	County: Hillsborough	
Telephone no. of facility/site **owner**: 603-589-3140					
Fax no. of facility/site **owner**: 603-589-3169		**Owner** is (check one): 1. Federal__○__ 2. State/Tribal__○__ 3. Private __○__ 4. Other __⊙__ if so, describe: City			
Address of **owner** (if different from site):					
Street: 9 Riverside Street					
Town: Nashua	State: NH	Zip: 03062	County: Hillsborough		
c) Legal name of **operator**:	**Operator** telephone no: 603-437-5387				
Continental Paving, Inc.	**Operator** fax no.: 603-437-5393	**Operator** email: schabot@continentalpaving.co			
Operator contact name and title: Steve Chabot, Project Manager					
Address of **operator** (if different from owner):	Street: One Continental Drive				
Town: Londonderry	State: NH	Zip: 03053	County: Hillsborough		

d) Check Y for "yes" or N for "no" for the following:
1. Has a prior NPDES permit exclusion been granted for the discharge? Y_____ N_____, if Y, number:_____
2. Has a prior NPDES application (Form 1 & 2C) ever been filed for the discharge?
Y_____ N_____, if Y, date and tracking #:_____
3. Is the discharge a "new discharge" as defined by 40 CFR 122.2? Y_____ N_____
4. For sites in Massachusetts, is the discharge covered under the Massachusetts Contingency Plan (MCP) and exempt from state permitting? Y_____ N_____

e) Is site/facility subject to any State permitting, license, or other action which is causing the generation of discharge? Y_____ N_____
If Y, please list:
1. site identification # assigned by the state of NH or MA:_____
2. permit or license # assigned:_____
3. state agency contact information: name, location, and telephone number:

f) Is the site/facility covered by any other EPA permit, including:
1. Multi-Sector General Permit? Y_____ N_____,
if Y, number:_____
2. Final Dewatering General Permit? Y_____ N_____,
if Y, number:_____
3. EPA Construction General Permit? Y_____ N_____,
if Y, number:_____
4. Individual NPDES permit? Y_____ N_____,
if Y, number:_____
5. any other water quality related individual or general permit? Y_____ N_____, if Y, number:AOT-0571

g) Is the site/facility located within or does it discharge to an Area of Critical Environmental Concern (ACEC)? Y_____ N_____

h) Based on the facility/site information and any historical sampling data, identify the sub-category into which the potential discharge falls.

Activity Category	**Activity Sub-Category**
I - Petroleum Related Site Remediation	A. Gasoline Only Sites _____ B. Fuel Oils and Other Oil Sites (including Residential Non-Business Remediation Discharges) _____ C. Petroleum Sites with Additional Contamination _____
II - Non Petroleum Site Remediation	A. Volatile Organic Compound (VOC) Only Sites _____ B. VOC Sites with Additional Contamination _____ C. Primarily Heavy Metal Sites _____
III - Contaminated Construction Dewatering	A. General Urban Fill Sites _____ B. Known Contaminated Sites _____

IV - Miscellaneous Related Discharges	A. Aquifer Pump Testing to Evaluate Formerly Contaminated Sites ☐ B. Well Development/Rehabilitation at Contaminated/Formerly Contaminated Sites ☐ C. Hydrostatic Testing of Pipelines and Tanks ☐ D. Long-Term Remediation of Contaminated Sumps and Dikes ☐ E. Short-term Contaminated Dredging Drain Back Waters (if not covered by 401/404 permit) ☐

2. Discharge information. Please provide information about the discharge, (attaching additional sheets as necessary) including:

a) Describe the discharge activities for which the owner/applicant is seeking coverage:

Temporary construction-phase dewatering for construction of a storm water sewer, manholes and outlet to the Nashua River at the Broad Street Parkway project in Nashua, New Hampshire

b) Provide the following information about each discharge:

1) Number of discharge points: 1

2) What is the **maximum** and **average flow rate** of discharge (in cubic feet per second, ft^3/s)?
Max. flow 0.045cfs (20gpm) Is maximum flow a **design value**? Y ◉ N ○
Average flow (include units) 0.023cfs (10gpm) Is average flow a design value or estimate? Estimate

3) Latitude and longitude of each discharge within 100 feet:

pt.1: lat 42.760307	long -71.476162	pt.2: lat.	long. ;
pt.3: lat	long	pt.4: lat.	long. ;
pt.5: lat	long	pt.6: lat.	long. ;
pt.7: lat	long	pt.8: lat.	long. ; etc.

4) If hydrostatic testing, total volume of the discharge (gals):

5) Is the discharge intermittent ◉ or seasonal ○ ?
Is discharge ongoing? Y ○ N ○

c) Expected dates of discharge (mm/dd/yy): start 03/15/2015 end 10/15/2015

d) Please attach a line drawing or flow schematic showing water flow through the facility including:
1. sources of intake water, 2. contributing flow from the operation, 3. treatment units, and 4. discharge points and receiving waters(s). See Attached Figure 4, Groundwater Treatment System Schematic.

3. Contaminant information.

a) Based on the sub-category selected (see Appendix III), indicate whether each listed chemical is **believed present** or **believed absent** in the potential discharge. Attach additional sheets as needed.

Parameter *	CAS Number	Believed Absent	Believed Present	# of Samples	Sample Type (e.g., grab)	Analytical Method Used (method #)	Minimum Level (ML) of Test Method	Maximum daily value		Average daily value	
								concentration (ug/l)	mass (kg)	concentration (ug/l)	mass (kg)
1. Total Suspended Solids (TSS)		☐	☒	2	GRAB	2450D-97	5000	9000000	9811.8	4516500	2461.9
2. Total Residual Chlorine (TRC)		☐	☒	2	GRAB	4500CIG-00	50	550	0.6	275	0.15
3. Total Petroleum Hydrocarbons (TPH)		☒	☐	2	GRAB	1664A	5000	ND			
4. Cyanide (CN)	57125	☒	☐	2	GRAB	ASTM D7511	10	ND			
5. Benzene (B)	71432	☒	☐	2	GRAB	8260B	1	ND			
6. Toluene (T)	108883	☒	☐	2	GRAB	8260B	1	ND			
7. Ethylbenzene (E)	100414	☒	☐	2	GRAB	8260B	1	ND			
8. (m,p,o) Xylenes (X)	108883; 106423; 95476; 1330207	☒	☐	2	GRAB	8260	2	ND			
9. Total BTEX [2]	n/a	☒	☐	2	GRAB	8260B	5	ND			
10. Ethylene Dibromide (EDB) (1,2-Dibromoethane) [3]	106934	☒	☐	2	GRAB	8011	0.02	ND			
11. Methyl-tert-Butyl Ether (MtBE)	1634044	☒	☐	2	GRAB	8260B	5	ND			
12. tert-Butyl Alcohol (TBA) (Tertiary-Butanol)	75650	☒	☐	2	GRAB	8260B	30	ND			

***** Numbering system is provided to allow cross-referencing to Effluent Limits and Monitoring Requirements by Sub-Category included in Appendix III, as well as the Test Methods and Minimum Levels associated with each parameter provided in Appendix VI.

[2] BTEX = Sum of Benzene, Toluene, Ethylbenzene, total Xylenes.

[3] EDB is a groundwater contaminant at fuel spill and pesticide application sites in New England.

Parameter *	CAS Number	Believed Absent	Believed Present	# of Samples	Sample Type (e.g., grab)	Analytical Method Used (method #)	Minimum Level (ML) of Test Method	Maximum daily value		Average daily value	
								concentration (ug/l)	mass (kg)	concentration (ug/l)	mass (kg)
13. tert-Amyl Methyl Ether (TAME)	9940508	☒	☐	2	GRAB	8260B	5	ND			
14. Naphthalene	91203	☒	☐	2	GRAB	8260B	5	ND			
15. Carbon Tetrachloride	56235	☒	☐	2	GRAB	8260B	2	ND			
16. 1,2 Dichlorobenzene (o-DCB)	95501	☒	☐	2	GRAB	8260B	1	ND			
17. 1,3 Dichlorobenzene (m-DCB)	541731	☒	☐	2	GRAB	8260B	1	ND			
18. 1,4 Dichlorobenzene (p-DCB)	106467	☒	☐	2	GRAB	8260B	1	ND			
18a. Total dichlorobenzene		☒	☐	2	GRAB	8260B	3	ND			
19. 1,1 Dichloroethane (DCA)	75343	☒	☐	2	GRAB	8260B	1	ND			
20. 1,2 Dichloroethane (DCA)	107062	☒	☐	2	GRAB	8260B	2	ND			
21. 1,1 Dichloroethene (DCE)	75354	☒	☐	2	GRAB	8260B	1	ND			
22. cis-1,2 Dichloroethene (DCE)	156592	☐	☒	2	GRAB	8260B	2	3	0.0033	1.5	0.0008
23. Methylene Chloride	75092	☒	☐	2	GRAB	8260B	5	ND			
24. Tetrachloroethene (PCE)	127184	☒	☐	2	GRAB	8260B	2	ND			
25. 1,1,1 Trichloro-ethane (TCA)	71556	☐	☒	2	GRAB	8260B	2	3	0.0033	1.5	0.0008
26. 1,1,2 Trichloro-ethane (TCA)	79005	☒	☐	2	GRAB	8260B	2	ND			
27. Trichloroethene (TCE)	79016	☐	☒	2	GRAB	8260B	2	73	0.0796	36.5	0.0199

Parameter *	CAS Number	Believed Absent	Believed Present	# of Samples	Sample Type (e.g., grab)	Analytical Method Used (method #)	Minimum Level (ML) of Test Method	Maximum daily value		Average daily value	
								concentration (ug/l)	mass (kg)	concentration (ug/l)	mass (kg)
28. Vinyl Chloride (Chloroethene)	75014	☒	☐	2	GRAB	8260B	2	ND			
29. Acetone	67641	☒	☐	2	GRAB	8260B	10	ND			
30. 1,4 Dioxane	123911	☒	☐	2	GRAB	8260B SIM	0.25	ND			
31. Total Phenols	108952	☒	☐	2	GRAB	8270D	1	ND			
32. Pentachlorophenol (PCP)	87865	☒	☐	2	GRAB	8270D	5	ND			
33. Total Phthalates (Phthalate esters) [4]		☒	☐	2	GRAB	8270D	26	ND			
34. Bis (2-Ethylhexyl) Phthalate [Di-(ethylhexyl) Phthalate]	117817	☒	☐	2	GRAB	8270D	5	ND			
35. Total Group I Polycyclic Aromatic Hydrocarbons (PAH)		☐	☒	2	GRAB	8270D	0.7	0.26	0.0003	0.13	0.0001
a. Benzo(a) Anthracene	56553	☐	☒	2	GRAB	8270D	0.1	0.13	0.0001	0.065	0.00004
b. Benzo(a) Pyrene	50328	☒	☐	2	GRAB	8270D	0.1				
c. Benzo(b)Fluoranthene	205992	☐	☒	2	GRAB	8270D	0.1	0.13	0.0001	0.065	0.00004
d. Benzo(k)Fluoranthene	207089	☒	☐	2	GRAB	8270D	0.1	ND			
e. Chrysene	21801	☒	☐	2	GRAB	8270D	0.1	ND			
f. Dibenzo(a,h)anthracene	53703	☒	☐	2	GRAB	8270D	0.1	ND			
g. Indeno(1,2,3-cd) Pyrene	193395	☒	☐	2	GRAB	8270D	0.1	ND			
36. Total Group II Polycyclic Aromatic Hydrocarbons (PAH)		☐	☒	2	GRAB	8270	0.9	0.043	0.0005	0.215	0.0001

[4] The sum of individual phthalate compounds.

Parameter *	CAS Number	Believed Absent	Believed Present	# of Samples	Sample Type (e.g., grab)	Analytical Method Used (method #)	Minimum Level (ML) of Test Method	Maximum daily value		Average daily value	
								concentration (ug/l)	mass (kg)	concentration (ug/l)	mass (kg)
h. Acenaphthene	83329	☒	☐	2	GRAB	8270D	0.1	ND			
i. Acenaphthylene	208968	☒	☐	2	GRAB	8270D	0.1	ND			
j. Anthracene	120127	☒	☐	2	GRAB	8270D	0.1	ND			
k. Benzo(ghi) Perylene	191242	☒	☐	2	GRAB	8270D	0.1	ND			
l. Fluoranthene	206440	☐	☒	2	GRAB	8270D	0.1	0.18	0.0002	0.09	0.00005
m. Fluorene	86737	☒	☐	2	GRAB	8270D	0.1	ND			
n. Naphthalene	91203	☒	☐	2	GRAB	8270D	0.1	ND			
o. Phenanthrene	85018	☐	☒	2	GRAB	8270D	0.1	0.1	0.0001	0.05	0.00003
p. Pyrene	129000	☐	☒	2	GRAB	8270D	0.1	0.15	0.0002	0.075	0.00004
37. Total Polychlorinated Biphenyls (PCBs)	85687; 84742; 117840; 84662; 131113; 117817.	☒	☐	2	GRAB	608	1.8	ND			
38. Chloride	16887006	☐	☒	2	GRAB	4500CIE-97	5000	1500000	1635.3	778500	424.36
39. Antimony	7440360	☐	☒	2	GRAB	200.8	0.5	2.1	0.0023	2.05	0.0011
40. Arsenic	7440382	☐	☒	2	GRAB	200.8	1.0	110	0.1199	61	0.033
41. Cadmium	7440439	☐	☒	2	GRAB	200.8	0.2	2	0.022	1	0.0005
42. Chromium III (trivalent)	16065831	☐	☒	2	GRAB	200.8	10	80	0.0872	40	0.0218
43. Chromium VI (hexavalent)	18540299	☒	☐	2	GRAB	7196A	10	ND			
44. Copper	7440508	☐	☒	2	GRAB	200.8	0.5	70	0.076	36.9	0.02
45. Lead	7439921	☐	☒	2	GRAB	200.8	0.2	47	0.051	24.2	0.0132
46. Mercury	7439976	☐	☒	2	GRAB	3112B	0.2	0.2	0.002	0.1	0.0001
47. Nickel	7440020	☐	☒	2	GRAB	200.8	2	110	0.120	58.8	0.032
48. Selenium	7782492	☐	☒	2	GRAB	200.8	1	2	0.0022	1	0.0005
49. Silver	7440224	☒	☒	2	GRAB	200.8	0.2	16	0.0174	8	0.0044
50. Zinc	7440666	☐	☒	2	GRAB	200.8	5	170	0.185	155	0.085
51. Iron	7439896	☐	☒	2	GRAB	200.8	50	61000	66.50	31050	16.93
Other (describe):		☐	☐								

Parameter *	CAS Number	Believed Absent	Believed Present	# of Samples	Sample Type (e.g., grab)	Analytical Method Used (method #)	Minimum Level (ML) of Test Method	Maximum daily value		Average daily value	
								concentration (ug/l)	mass (kg)	concentration (ug/l)	mass (kg)
		☐	☐								
		☐	☐								

b) For discharges where **metals** are believed present, please fill out the following (attach results of any calculations):

Step 1: Do any of the metals in the influent exceed the effluent limits in Appendix III (i.e., the limits set at zero dilution)? Y_◉_ N_○_	If yes, which metals? As, Cd, CrIII, Cu, Pb, Ni, Ag, Zn, Fe
Step 2: For any metals which exceed the **Appendix III** limits, calculate the **dilution factor (DF)** using the formula in Part I.A.3.c (step 2) of the NOI instructions or as determined by the State prior to the submission of this NOI. What is the dilution factor for applicable metals? Metal: As, Cd, CrIII, Cu, Pb, Ni, Ag, Zn, Fe DF: 935 Metal: DF: Metal: DF: Metal: DF: Etc.	Look up the limit calculated at the corresponding dilution factor in **Appendix IV.** Do any of the metals in the **influent** have the potential to exceed the corresponding **effluent** limits in Appendix IV (i.e., is the influent concentration above the limit set at the calculated dilution factor)? Y_◉_ N_○_ If Y, list which metals: Iron (Fe)

4. Treatment system information. Please describe the treatment system using separate sheets as necessary, including:

a) A description of the treatment system, including a schematic of the proposed or existing treatment system:

Groundwater encountered during construction activities for the drainage installation from DN-P129 to outfall on Nashua River will be pumped into a treatment system prior to discharge into the Nashua River. The first element of the system will be a fractionalization tank where solids will settle out. The effluent will then pass through a 10 um bag filter then two granular activated carbon vessels prior to discharge to the Nashua River.

b) Identify each applicable treatment unit (check all that apply):	Frac. tank ☒	Air stripper ☐	Oil/water separator ☐	Equalization tanks ☐	Bag filter ☒	GAC filter ☒
	Chlorination ☐	De-chlorination ☐	Other (please describe):	Aeration System to precipitate out ferrous iron. Cation Resin Vessels (to reduce metals if required)		

c) Proposed **average** and **maximum flow rates** (gallons per minute) for the discharge and the **design flow rate**(s) (gallons per minute) of the treatment system:
Average flow rate of discharge 10 gpm Maximum flow rate of treatment system 20 gpm
Design flow rate of treatment system >20 gpm gpm

d) A description of chemical additives being used or planned to be used (attach MSDS sheets):

None anticipated.

5. Receiving surface water(s). Please provide information about the receiving water(s), using separate sheets as necessary:

a) Identify the discharge pathway:	Direct to receiving water ☒	Within facility (sewer) ☐	Storm drain ☐	Wetlands ☐	Other (describe):

b) Provide a narrative description of the discharge pathway, including the name(s) of the receiving waters:

Dewatering effluent will be discharged directly into the Nashua River in Nashua, NH. The receiving reach is NHRIV010700040402-08

c) Attach a detailed map(s) indicating the site location and location of the outfall to the receiving water:
1. For multiple discharges, number the discharges sequentially.
2. For indirect dischargers, indicate the location of the discharge to the indirect conveyance and the discharge to surface water
The map should also include the location and distance to the nearest sanitary sewer as well as the locus of nearby sensitive receptors (based on USGS topographical mapping), such as surface waters, drinking water supplies, and wetland areas.

d) Provide the state water quality classification of the receiving water Class B

e) Provide the reported or calculated seven day-ten year low flow (7Q10) of the receiving water 46.3 cfs
Please attach any calculation sheets used to support stream flow and dilution calculations.

f) Is the receiving water a listed 303(d) water quality impaired or limited water? Y ◉ N ○ If yes, for which pollutant(s)?
E. coli
Is there a final TMDL? Y ◉ N ○ If yes, for which pollutant(s)? E. coli

6. ESA and NHPA Eligibility.

Please provide the following information according to requirements of Permit Parts I.A.4 and I.A.5 Appendices II and VII.

a) Using the instructions in Appendix VII and information on Appendix II, under which criterion listed in Part I.C are you eligible for coverage under this general permit?

A ___ B ___ C ___ D ___ E ___ F ___

b) If you selected Criterion D or F, has consultation with the federal services been completed? Y___ N___ Underway___

c) If consultation with U.S. Fish and Wildlife Service and/or NOAA Fisheries Service was completed, was a written concurrence finding that the discharge is "not likely to adversely affect" listed species or critical habitat received? Y___ N___

d) Attach documentation of ESA eligibility as described in the NOI instructions and required by Appendix VII, Part I.C, Step 4.

e) Using the instructions in Appendix VII, under which criterion listed in Part II.C are you eligible for coverage under this general permit?

1 ___ 2 ___ 3 ___

f) If Criterion 3 was selected, attach all written correspondence with the State or Tribal historic preservation officers, including any terms and conditions that outline measures the applicant must follow to mitigate or prevent adverse effects due to activities regulated by the RGP.

7. Supplemental information.

Please provide any supplemental information. Attach any analytical data used to support the application. Attach any certification(s) required by the general permit.

Attachment A: Site Figures
Attachment B: Analytical data for groundwater samples
Attachment C: Calculations of Dilution Factor
Attachment D: ESA eligibility information
Attachment E: NHPA eligibility information
Attachment F: Best Management Practices Plan

8. Signature Requirements: The Notice of Intent must be signed by the operator in accordance with the signatory requirements of 40 CFR Section 122.22, including the following certification:

I certify under penalty of law that this document and all attachments were prepared under my direction or supervision in accordance with a system designed to assure that qualified personnel properly gather and evaluate the information submitted. Based on my inquiry of the person or persons who manage the system, or those persons directly responsible for gathering the information, I certify that the information submitted is, to the best of my knowledge and belief, true, accurate, and complete. I certify that I am aware that there are significant penalties for submitting false information, including the possibility of fine and imprisonment for knowing violations.

Facility/Site Name:	Broad Street Parkway - Parkway South, Nashua Canal Outfall
Operator signature:	
Printed Name &Title:	Steve Chabot Project Manager
Date:	February 24, 2015

NORTHEAST, INC.

ATTACHMENTS

NORTHEAST, INC.

ATTACHMENT A

HTE NORTHEAST, INC.

FIGURES

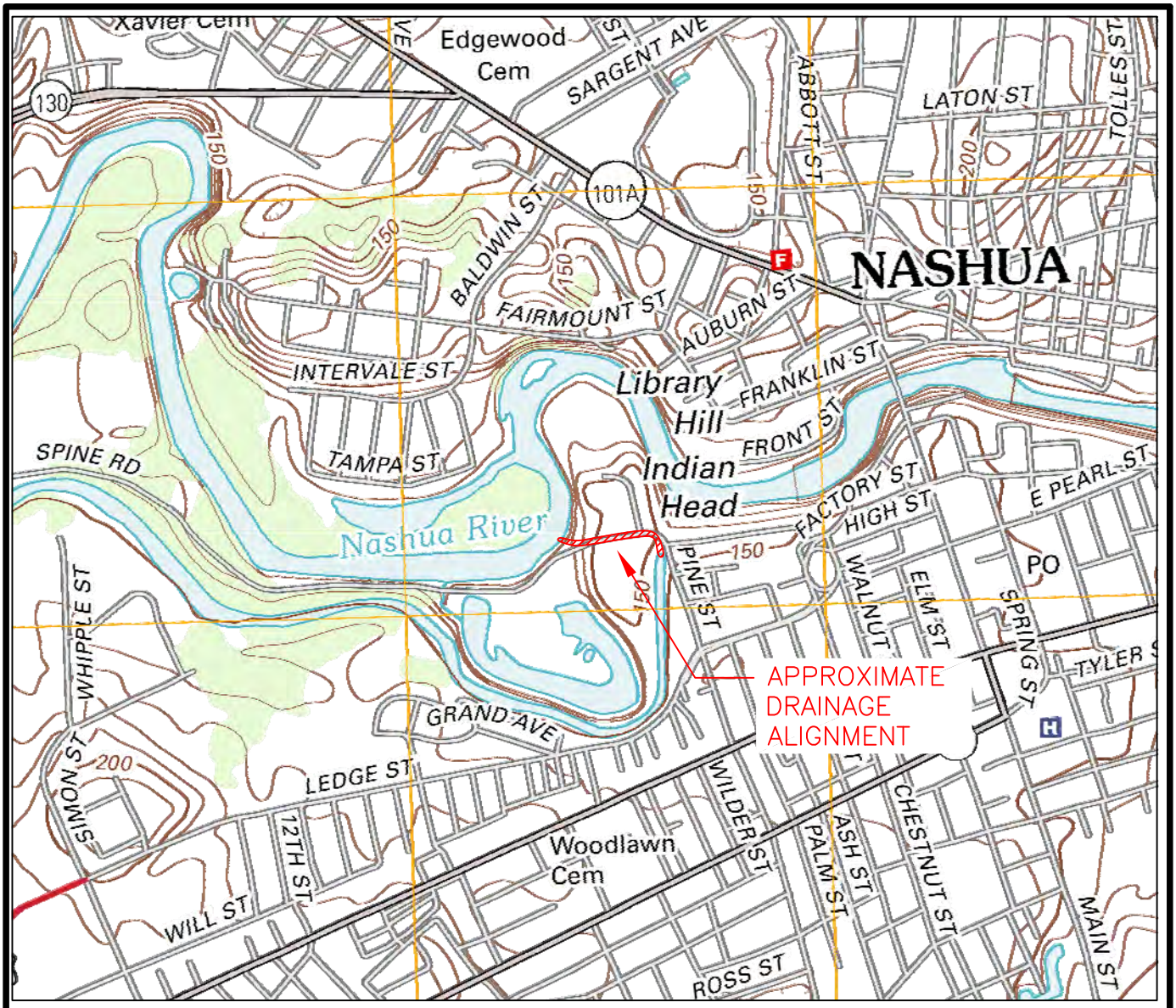

LOCATION: 42° 45' 36.86"
−71° 28' 34.64"

Source: 2012 USGS Nashua North (NH) Quadrangles
7.5 X 7.5 MINUTE SERIES

HTE NORTHEAST INC.
Environmental Engineering
Geotechnical Engineering
Hydrogeology

2 Cote Lane, Suite 1
Bedford, New Hampshire
(603) 668-1654

FIGURE 1
LOCUS PLAN
NOTICE OF INTENT FOR REMEDIATION GENERAL PERMIT

BROAD STREET PARKWAY – SOUTH
NASHUA CANAL OUTLET
NASHUA, NEW HAMPSHIRE

PROJECT NO. 5198.J | FEBRUARY 2015

V:\5000\51\5198 Broad St. SWP\5198J – RGP\CAD – J\5198J.FIG1.dwg

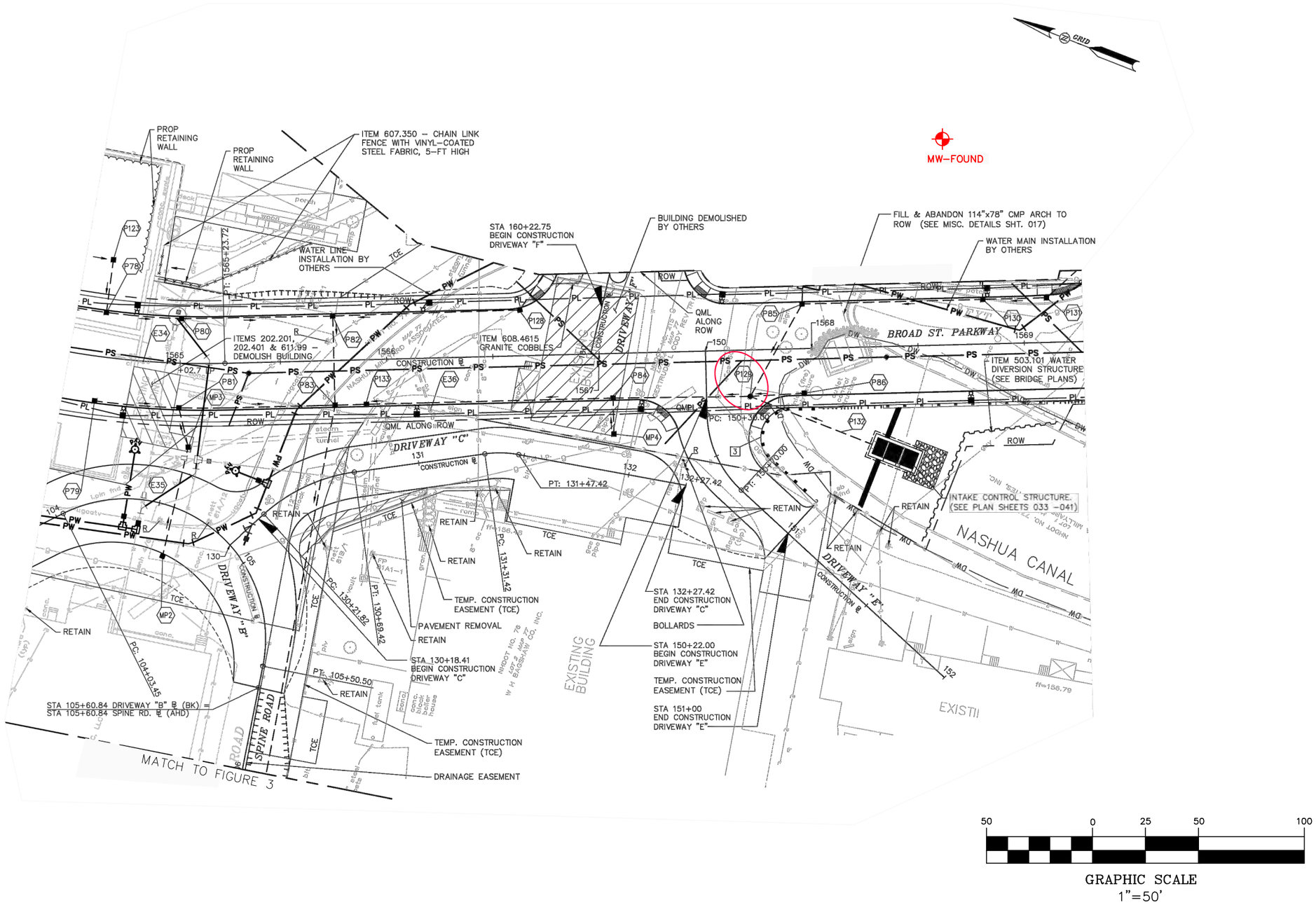

HTE NORTHEAST INC.

Environmental Engineering
Geotechnical Engineering
Hydrogeology

2 Cote Lane, Suite 1
Bedford, New Hampshire
(603) 668-1654
www.htenortheast.com

LEGEND:

APPROX. LOCATION OF MONITORING WELL SAMPLED BY SANBORN HEAD ASSOCIATES ON 31 JULY 2013.

MW-FOUND

BASE PLAN:

"CITY OF NASHUA, DIVISION OF PUBLIC WORKS, GENERAL PLANS, STATE PROJECT NO. 16110D, SHEET 52" BY FAY, SPOFFORD & THORNDIKE, LLC, BEDFORD, NEW HAMPSHIRE, DATED SEPTEMBER 2013.

PROJECT NAME

BROAD STREET PARKWAY – SOUTH 16110–D

LOCATION

BROAD STREET PARKWAY SOUTH NASHUA, NEW HAMPSHIRE

DRAWING TITLE

NASHUA CANAL OUTLET ALIGNMENT

DRAWN BY	EAA	DATE	02/13/2015
CHKD. BY	CET	APVD. BY	CET
PROJ. NO.	5198.J	SCALE	1"=50'

DATE	REVISION	BY

FIGURE NO.

FIGURE 2

V:\5000\51\5198 Broad St. SWP\5198J – RGP\CAD – J\5198J.FIG2–3R1.dwg(FIG2)

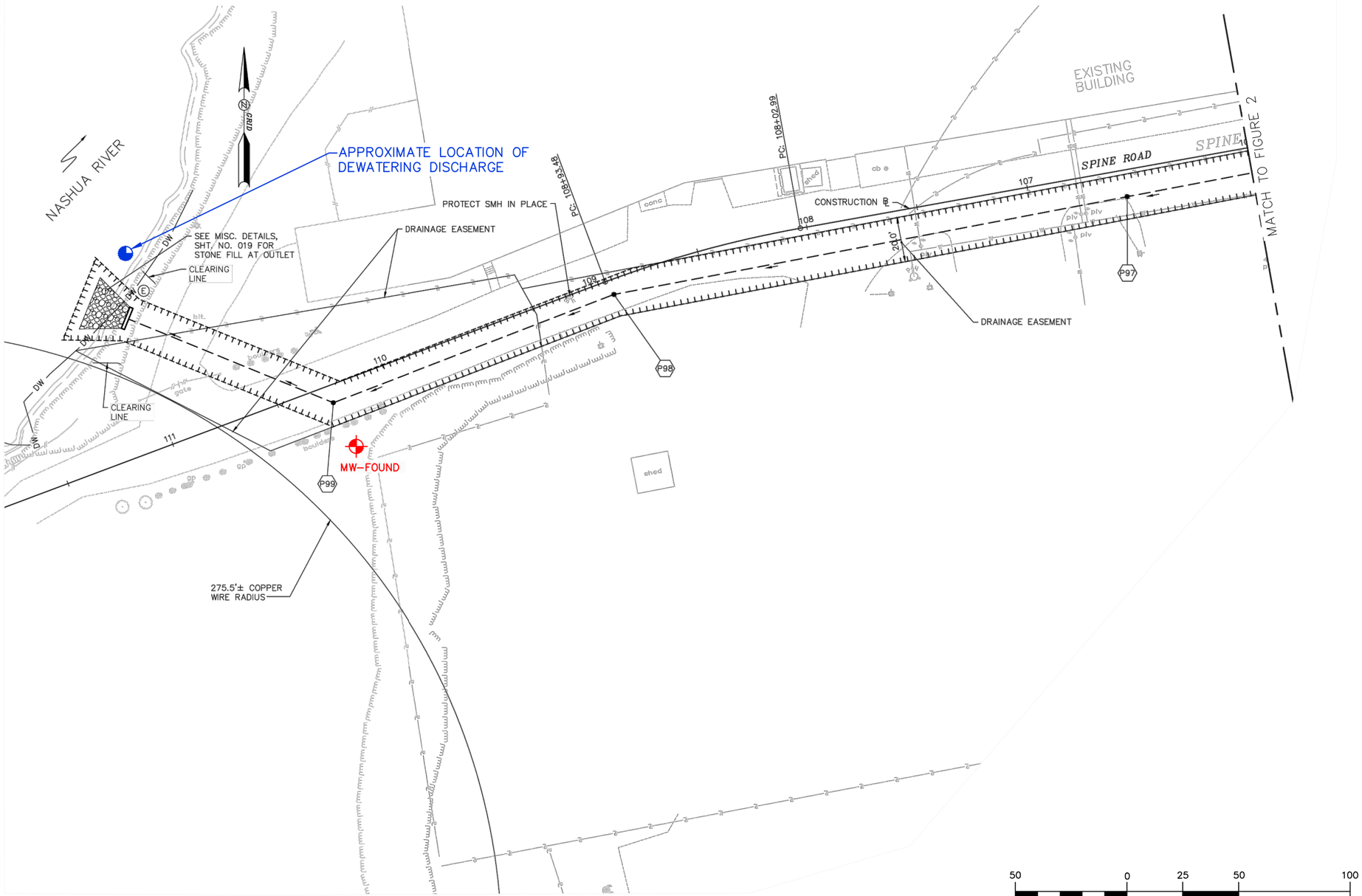

HTE NORTHEAST INC.

Environmental Engineering
Geotechnical Engineering
Hydrogeology

2 Cote Lane, Suite 1
Bedford, New Hampshire
(603) 668-1654
www.htenortheast.com

LEGEND:

APPROX. LOCATION OF MONITORING WELL SAMPLED BY HTE NORTHEAST, INC. ON JANUARY 20, 2015.

MW-FOUND

APPROX. DISCHARGE LOCATION.

BASE PLAN:

"CITY OF NASHUA, DIVISION OF PUBLIC WORKS, GENERAL PLANS, STATE PROJECT NO. 16110D, SHEET 53" BY FAY, SPOFFORD & THORNDIKE, LLC, BEDFORD, NEW HAMPSHIRE, DATED SEPTEMBER 2013.

PROJECT NAME

BROAD STREET PARKWAY – SOUTH 16110–D

LOCATION

BROAD STREET PARKWAY SOUTH NASHUA, NEW HAMPSHIRE

DRAWING TITLE

NASHUA CANAL OUTLET ALIGNMENT

DRAWN BY	EAA	DATE	02/13/2015
CHKD. BY	EAA	APVD. BY	CET
PROJ. NO.	5198.J	SCALE	1"=50'

DATE	REVISION	BY

FIGURE NO.

FIGURE 3

V:\5000\51\5198 Broad St. SWP\5198J – RGP\CAD – J\5198J.FIG2–3R1.dwg(FIG3)

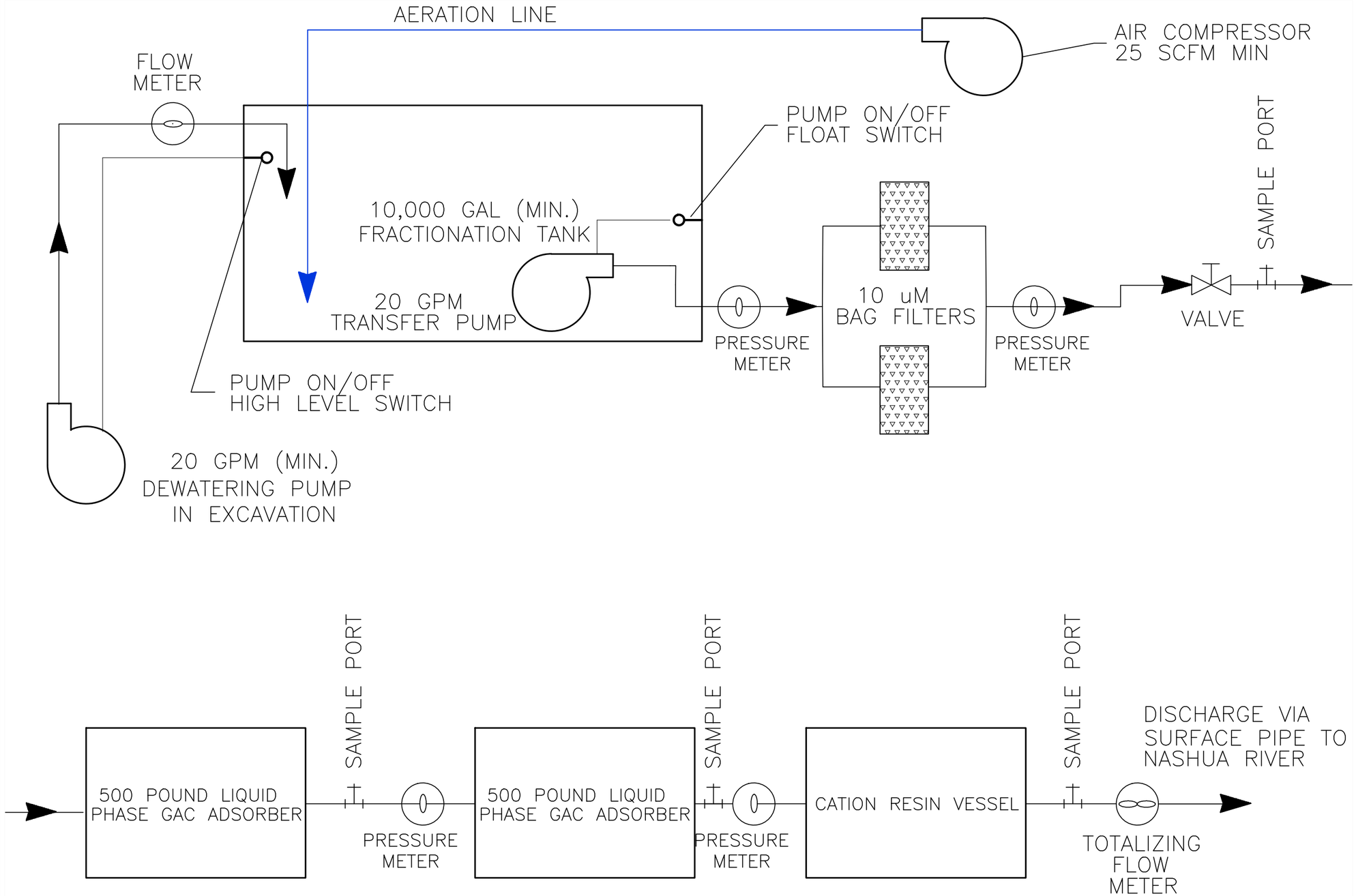

HTE NORTHEAST INC.
Environmental Engineering
Geotechnical Engineering
Hydrogeology
2 Cote Lane, Suite 1
Bedford, New Hampshire
(603) 668-1654
www.htenortheast.com

PROJECT NAME
BROAD STREET PARKWAY – SOUTH 16110–D

LOCATION
BROAD STREET PARKWAY SOUTH
NASHUA, NEW HAMPSHIRE

DRAWING TITLE
GROUNDWATER TREATMENT SYSTEM SCHEMATIC

DRAWN BY	EAA	DATE	02/13/2015
CHKD. BY	CET	APVD. BY	CET
PROJ. NO.	5198.J	SCALE	NTS

DATE	REVISION	BY

FIGURE NO.
FIGURE 4

V:\5000\51\5198 Broad St. SWP\5198J – RGP\CAD – J\5198J.FIG4r1.dwg

HTE NORTHEAST, INC.

ATTACHMENT B

TABLE 1

Summary of Analytical Data - Groundwater

Broad Street Parkway

Nashua, New Hampshire

Parameter	Believed Absent	Believed Present	Type of Sample	Analytical Method	Min. Level of Test Method (µg/L)	Effluent Limits (µg/L)	Untreated Groundwater Sample (µg/L) [TP-111A]	Untreated Groundwater Sample (µg/L) [MW-P99]
1. Total Suspended Solids (TSS)		√	Grab	2540D	5,000	30,000	**9,000,000**	**33,000**
2. Total Residual Chlorine (TRC)		√	Grab	4500ClG	50	11	<50	550
3. Total Petroleum Hydrocarbons (TPH)	√		Grab	1664A	5,000	5,000	<5,000	<5,000
4. Cyanide (CN)	√		Grab	4500CNE	10	5.2	<10	<10
5. Benzene (B)	√		Grab	8260B	1	50	<1	<1
6. Toluene (T)	√		Grab	8260B	1	–	<1	<1
7. Ethylbenzene (E)	√		Grab	8260B	1	–	<1	<1
8. (m,p,o) Xylenes (X)	√		Grab	8260B	–	–	–	–
m,p-Xylenes	√		Grab	8260B	1	–	<1	<1
o-Xylene	√		Grab	8260B	1	–	<1	<1
9. Total BTEX	√		–	–	–	100	ND	ND
10. Ethylene Dibromide (EDB; 1,2-Dibromoethane)	√		Grab	8011/504	0.02	0.05	<0.02	<0.02
11. Methyl-tert-Butyl Ether (MtBE)	√		Grab	8260B	5	70.0	<5	<5
12. tert-Butyl Alcohol (TBA)	√		Grab	8260B	30	Monitor	<30	<30
13. tert-Amyl Methyl Ether (TAME)	√		Grab	8260B	5	Monitor	<5	<5
14. Naphthalene	√		Grab	8260B	5	20	<5	<5
15. Carbon Tetrachloride	√		Grab	8260B	2	4.4	<2	<2
16. 1,4 Dichlorobenzene (p-DCB)	√		Grab	8260B	1	5.0	<1	<1
17. 1,2 Dichlorobenzene (o-DCB)		√	Grab	8260B	1	600	<1	3
18. 1,3 Dichlorobenzene (m-DCB)	√		Grab	8260B	1	320	<1	<1
18a. Total Dichlorobenzene	√		Grab	8260B	–	763	ND	3
19. 1,1 Dichloroethane (DCA)	√		Grab	8260B	2	70	<2	<2
20. 1,2 Dichloroethane (DCA)	√		Grab	8260B	2	5.0	<2	<2
21. 1,1 Dichloroethylene (DCE)	√		Grab	8260B	1	3.2	<1	<1
22. cis-1,2 Dichloro-ethylene (DCE)	√		Grab	8260B	2	70	<2	<2
23. Dichloromethane (Methylene Chloride)	√		Grab	8260B	5	4.6	<5	<5
24. Tetrachloroethylene (PCE)	√		Grab	8260B	2	5.0	<2	<2
25. 1,1,1 Trichloro-ethane (TCA)		√	Grab	8260B	2	200	<2	3
26. 1,1,2 Trichloro-ethane (TCA)	√		Grab	8260B	2	5.0	<2	<2
27. Trichloroethylene (TCE)		√	Grab	8260B	2	5.0	<2	**73**
28. Vinyl Chloride	√		Grab	8260B	2	2.0	<2	<2
29. Acetone	√		Grab	8260B	10	Monitor	<10	<10
30. 1,4-Dioxane	√		Grab	8270B SIM	0.25	Monitor	<0.25	<0.26
31. Total Phenols	√		Grab	8270D	1	300	<1	<1
32. Pentachlorophenol (PCP)	√		Grab	8270D	5	1.0	<5	<5
33. Total Phthalates (Phthalate esthers)	√		Grab	8270D	–	3.0	ND	ND
Dimethylphthalate	√		Grab	8270D	1	–	<1	<1
Diethylphthalate	√		Grab	8270D	5	–	<5	<5
Di-n-butylphthalate	√		Grab	8270D	5	–	<5	<5
Butylbenzylphthalate	√		Grab	8270D	2	–	<2	<2
Di-n-octylphthalate	√		Grab	8270D	5	–	<5	<5
34. Bis (2-Ethylhexyl) Phthalate [Di- (ethylhexyl) Phthalate]	√		Grab	8270D	5	6.0	<5	<5
35. Total Group I Polycylic Aromatic Hydrocarbons (PAHs)		√	Grab	8270D	–	10.0	0.26	<0.7
a. Benzo(a)anthracene		√	Grab	8270D	0.1	0.1	**0.13**	<0.1
b. Benzo(a)pyrene	√		Grab	8270D	0.1	0.1	<0.1	<0.1
c. Benzo(b)fluoranthene		√	Grab	8270D	0.1	0.1	**0.13**	<0.1
d. Benzo(k)fluoranthene	√		Grab	8270D	0.1	0.1	<0.1	<0.1
e. Chrysene	√		Grab	8270D	0.1	0.1	<0.1	<0.1
f. Dibenzo(a,h)anthracene	√		Grab	8270D	0.1	0.1	<0.1	<0.1
g. Indeno(1,2,3-cd)pyrene	√		Grab	8270D	0.1	0.1	<0.1	<0.1
36. Total Group II Polycyclic Aromatic Hydrocarbons (PAHs)		√	Grab	8270D	–	100	0.43	<0.9
h. Acenaphthene	√		Grab	8270D	0.1	–	<0.1	<0.1
i. Acenaphthylene	√		Grab	8270D	0.1	–	<0.1	<0.1
j. Anthracene	√		Grab	8270D	0.1	–	<0.1	<0.1
k. Benzo(g,h,i)perylene	√		Grab	8270D	0.1	–	<0.1	<0.1
l. Fluoranthene		√	Grab	8270D	0.1	–	0.18	<0.1
m. Fluorene	√		Grab	8270D	0.1	–	<0.1	<0.1
n. Naphthalene	√		Grab	8270D	0.1	20	<0.1	<0.1
o. Phenanthrene		√	Grab	8270D	0.1	–	0.10	<0.1
p. Pyrene		√	Grab	8270D	0.1	–	0.15	<0.1
37. Total Polychlorinated Biphenyls (PCBs)	√		Grab	608/3510C	2.1	0.000064	<2.1	<2.1
38. Chloride		√	Grab	4500ClE	5,000	Monitor	1,500,000	57,000
39. Antimony*		√	Grab	200.8	1	141	2	2
40. Arsenic*		√	Grab	200.8	1	540	110	12
41. Cadmium*		√	Grab	200.8	1	32	2	<1
42. Chromium III (trivalent)*		√	Grab	200.8	1	1710	80	<1
43. Chromium VI (hexavalent)*	√		Grab	200.8	10	1140	<10	<10
44. Copper*		√	Grab	200.8	1	285	70	3.8
45. Lead*		√	Grab	200.8	1	55	**47**	1.4
46. Mercury*	√		Grab	7470	0.2	2.3	<0.2	0.2
47. Nickel*		√	Grab	200.8	1	1614	110	8
48. Selenium*		√	Grab	200.8	1	408	2	<1
49. Silver*		√	Grab	200.8	1	35	16	<1
50. Zinc*		√	Grab	200.8	5	1480	140	170
51. Iron*		√	Grab	200.8	50	5,000	**61,000**	1,100

Notes:

1. The parameters listed are for Remediation General Permit (RGP) Category III - Contaminated Construction Dewatering, Subcategory A - General Urban Fill Sites.
2. Results are presented in micrograms per liter (µg/l) which are equivalent to parts per billion (ppb).
3. ND" indicates not detected above the laboratory's reporting limit.
"<" indicates not detected above the listed laboratory reporting limit.
"*" indicates Effluent Limit depends on a dilution factor of 935.
4. **Bold** indicates exceedance of the Effluent Limit.

Eastern Analytical, Inc.

professional laboratory & drilling services

Roger Keilig
HTE Northeast, Inc.
2 Cote Lane, Suite 1
Bedford , NH 03110

ACCREDITED IN ACCORDANCE WITH nelac

Subject: Laboratory Report

Eastern Analytical, Inc. ID: 139940
Client Identification: 16110D Nashua Broad St. Parkway | 5198J
Date Received: 1/20/2015

Dear Mr. Keilig :

Enclosed please find the laboratory report for the above identified project. All analyses were performed in accordance with our QA/QC Program. Unless otherwise stated, holding times, preservation techniques, container types, and sample conditions adhered to EPA Protocol. Samples which were collected by Eastern Analytical, Inc. (EAI) were collected in accordance with approved EPA procedures. Eastern Analytical, Inc. certifies that the enclosed test results meet all requirements of NELAP and other applicable state certifications. Please refer to our website at www.eailabs.com for a copy of our NELAP certificate and accredited parameters.

The following standard abbreviations and conventions apply to all EAI reports:

Solid samples are reported on a dry weight basis, unless otherwise noted
< : "less than" followed by the reporting limit
> : "greater than" followed by the reporting limit
%R : % Recovery

Eastern Analytical Inc. maintains certification in the following states: Connecticut (PH-0492), Maine (NH005), Massachusetts (M-NH005), New Hampshire/NELAP (1012), Rhode Island (269) and Vermont (VT1012).

The following information is contained within this report: Sample Conditions summary, Analytical Results/Data, Quality Control data (if requested) and copies of the Chain of Custody. This report may not be reproduced except in full, without the the written approval of the laboratory.

If you have any questions regarding the results contained within, please feel free to directly contact me or the chemist(s) who performed the testing in question. Unless otherwise requested, we will dispose of the sample(s) 30 days from the sample receipt date.

We appreciate this opportunity to be of service and look forward to your continued patronage.

Sincerely,

Lorraine Olashaw, Lab Director | 2.5.15 Date | 15 # of pages (excluding cover letter)

SAMPLE CONDITIONS PAGE

EAI ID#: **139940**

Client: **HTE Northeast, Inc.**

Client Designation: **16110D Nashua Broad St. Parkway | 5198J**

Temperature upon receipt (°C): 8.4 **Received on ice or cold packs (Yes/No): Y**

Acceptable temperature range (°C): 0-6

Lab ID	Sample ID	Date Received	Date Sampled	Sample Matrix	% Dry Weight	Exceptions/Comments (other than thermal preservation)
139940.01	MW P99	1/20/15	1/20/15	aqueous		Adheres to Sample Acceptance Policy
139940.02	Trip Blank	1/20/15	12/19/14	aqueous		Adheres to Sample Acceptance Policy
139940.03	Trip Blank	1/20/15	11/19/14	aqueous		Adheres to Sample Acceptance Policy

Samples were properly preserved and the pH measured when applicable unless otherwise noted. Analysis of solids for pH, Flashpoint, Ignitibility, Paint Filter, Corrosivity, Conductivity and Specific Gravity are reported on an "as received" basis.
Immediate analyses, pH, Total Residual Chlorine, Dissolved Oxygen and Sulfite, performed at the laboratory were run outside of the recommended 15 minute hold time.
All results contained in this report relate only to the above listed samples.
References include:
1) EPA 600/4-79-020, 1983
2) Standard Methods for Examination of Water and Wastewater,20th Edition, 1998 and 22nd Edition, 2012
3) Test Methods for Evaluating Solid Waste SW 846 3rd Edition including updates IVA and IVB
4) Hach Water Analysis Handbook, 2nd edition, 1992

LABORATORY REPORT

EAI ID#: **139940**

Client: **HTE Northeast, Inc.**

Client Designation: **16110D Nashua Broad St. Parkway | 5198J**

Sample ID:	MW P99	Trip Blank
Lab Sample ID:	139940.01	139940.02
Matrix:	aqueous	aqueous
Date Sampled:	1/20/15	12/19/14
Date Received:	1/20/15	1/20/15
Units:	ug/l	ug/l
Date of Analysis:	1/21/15	1/23/15
Analyst:	VG	VG
Method:	8260B	8260B
Dilution Factor:	1	1
Dichlorodifluoromethane	< 5	< 5
Chloromethane	< 2	< 2
Vinyl chloride	< 2	< 2
Bromomethane	< 2	< 2
Chloroethane	< 5	< 5
Trichlorofluoromethane	< 5	< 5
Diethyl Ether	< 5	< 5
Acetone	< 10	< 10
1,1-Dichloroethene	< 1	< 1
tert-Butyl Alcohol (TBA)	< 30	< 30
Methylene chloride	< 5	< 5
Carbon disulfide	< 5	< 5
Methyl-t-butyl ether(MTBE)	< 5	< 5
Ethyl-t-butyl ether(ETBE)	< 5	< 5
Isopropyl ether(DIPE)	< 5	< 5
tert-amyl methyl ether(TAME)	< 5	< 5
trans-1,2-Dichloroethene	< 2	< 2
1,1-Dichloroethane	< 2	< 2
2,2-Dichloropropane	< 2	< 2
cis-1,2-Dichloroethene	**3**	< 2
2-Butanone(MEK)	< 10	< 10
Bromochloromethane	< 2	< 2
Tetrahydrofuran(THF)	< 10	< 10
Chloroform	< 2	< 2
1,1,1-Trichloroethane	**3**	< 2
Carbon tetrachloride	< 2	< 2
1,1-Dichloropropene	< 2	< 2
Benzene	< 1	< 1
1,2-Dichloroethane	< 2	< 2
Trichloroethene	**73**	< 2
1,2-Dichloropropane	< 2	< 2
Dibromomethane	< 2	< 2
Bromodichloromethane	< 0.5	< 0.5
1,4-Dioxane	< 50	< 50
4-Methyl-2-pentanone(MIBK)	< 10	< 10
cis-1,3-Dichloropropene	< 2	< 2
Toluene	< 1	< 1
trans-1,3-Dichloropropene	< 2	< 2
1,1,2-Trichloroethane	< 2	< 2
2-Hexanone	< 10	< 10
Tetrachloroethene	< 2	< 2
1,3-Dichloropropane	< 2	< 2
Dibromochloromethane	< 2	< 2
1,2-Dibromoethane(EDB)	< 2	< 2
Chlorobenzene	< 2	< 2
1,1,1,2-Tetrachloroethane	< 2	< 2
Ethylbenzene	< 1	< 1

LABORATORY REPORT

EAI ID#: **139940**

Client: **HTE Northeast, Inc.**

Client Designation: **16110D Nashua Broad St. Parkway | 5198J**

Sample ID:	MW P99	Trip Blank
Lab Sample ID:	139940.01	139940.02
Matrix:	aqueous	aqueous
Date Sampled:	1/20/15	12/19/14
Date Received:	1/20/15	1/20/15
Units:	ug/l	ug/l
Date of Analysis:	1/21/15	1/23/15
Analyst:	VG	VG
Method:	8260B	8260B
Dilution Factor:	1	1
mp-Xylene	< 1	< 1
o-Xylene	< 1	< 1
Styrene	< 1	< 1
Bromoform	< 2	< 2
IsoPropylbenzene	< 1	< 1
Bromobenzene	< 2	< 2
1,1,2,2-Tetrachloroethane	< 2	< 2
1,2,3-Trichloropropane	< 2	< 2
n-Propylbenzene	< 1	< 1
2-Chlorotoluene	< 2	< 2
4-Chlorotoluene	< 2	< 2
1,3,5-Trimethylbenzene	< 1	< 1
tert-Butylbenzene	< 1	< 1
1,2,4-Trimethylbenzene	< 1	< 1
sec-Butylbenzene	< 1	< 1
1,3-Dichlorobenzene	< 1	< 1
p-Isopropyltoluene	< 1	< 1
1,4-Dichlorobenzene	< 1	< 1
1,2-Dichlorobenzene	< 1	< 1
n-Butylbenzene	< 1	< 1
1,2-Dibromo-3-chloropropane	< 2	< 2
1,3,5-Trichlorobenzene	< 1	< 1
1,2,4-Trichlorobenzene	< 1	< 1
Hexachlorobutadiene	< 0.5	< 0.5
Naphthalene	< 5	< 5
1,2,3-Trichlorobenzene	< 1	< 1
4-Bromofluorobenzene (surr)	**95 %R**	**91 %R**
1,2-Dichlorobenzene-d4 (surr)	**105 %R**	**101 %R**
Toluene-d8 (surr)	**98 %R**	**100 %R**
1,2-Dichloroethane-d4 (surr)	**106 %R**	**98 %R**

LABORATORY REPORT

EAI ID#: **139940**

Client: **HTE Northeast, Inc.**

Client Designation: **16110D Nashua Broad St. Parkway | 5198J**

Sample ID:	MW P99	Trip Blank
Lab Sample ID:	139940.01	139940.03
Matrix:	aqueous	aqueous
Date Sampled:	1/20/15	11/19/14
Date Received:	1/20/15	1/20/15
Units:	ug/l	ug/l
Date of Analysis:	1/22/15	1/22/15
Analyst:	VG	VG
Method:	8260B SIM	8260B SIM
Dilution Factor:	1	1
1,4-Dioxane	< 0.25	< 0.25
4-Bromofluorobenzene (surr)	**117 %R**	**116 %R**
Toluene-d8 (surr)	**111 %R**	**111 %R**

LABORATORY REPORT

EAI ID#: **139940**

Client: **HTE Northeast, Inc.**

Client Designation: **16110D Nashua Broad St. Parkway | 5198J**

Sample ID: MW P99

Lab Sample ID:	139940.01
Matrix:	aqueous
Date Sampled:	1/20/15
Date Received:	1/20/15
Units:	ug/l
Date of Extraction/Prep:	1/21/15
Date of Analysis:	1/21/15
Analyst:	JMR
Method:	8011/504
Dilution Factor:	1

1,2-Dibromoethane(EDB)	< 0.02
Dibromochloropropane (DBCP)	< 0.02
1,1,1,2-Tetrachloroethane (surr)	**119 %R**

LABORATORY REPORT

EAI ID#: **139940**

Client: **HTE Northeast, Inc.**

Client Designation: **16110D Nashua Broad St. Parkway | 5198J**

Sample ID:	MW P99
Lab Sample ID:	139940.01
Matrix:	aqueous
Date Sampled:	1/20/15
Date Received:	1/20/15
Units:	ug/l
Date of Extraction/Preparation	1/21/15
Date of Analysis:	1/21/15
Analyst:	JMR
Method:	8270D
Dilution Factor:	1
Phenol	< 1
2-Chlorophenol	< 1
2,4-Dichlorophenol	< 1
2,4,5-Trichlorophenol	< 1
2,4,6-Trichlorophenol	< 1
Pentachlorophenol	< 5
2-Nitrophenol	< 5
4-Nitrophenol	< 5
2,4-Dinitrophenol	< 10
2-Methylphenol	< 1
3/4-Methylphenol	< 1
2,4-Dimethylphenol	< 1
4-Chloro-3-methylphenol	< 1
4,6-Dinitro-2-methylphenol	< 5
Benzoic Acid	< 50
N-Nitrosodimethylamine	< 1
n-Nitroso-di-n-propylamine	< 1
n-Nitrosodiphenylamine	< 1
bis(2-Chloroethyl)ether	< 1
bis(2-chloroisopropyl)ether	< 1
bis(2-Chloroethoxy)methane	< 1
1,3-Dichlorobenzene	< 1
1,4-Dichlorobenzene	< 1
1,2-Dichlorobenzene	< 1
1,2,4-Trichlorobenzene	< 1
2-Chloronaphthalene	< 1
4-Chlorophenyl-phenylether	< 1
4-Bromophenyl-phenylether	< 1
Hexachloroethane	< 1
Hexachlorobutadiene	< 1
Hexachlorocyclopentadiene	< 5
Hexachlorobenzene	< 1
4-Chloroaniline	< 1
2-Nitroaniline	< 5
3-Nitroaniline	< 2
4-Nitroaniline	< 2
Benzyl alcohol	< 10
Nitrobenzene	< 1
Isophorone	< 1
2,4-Dinitrotoluene	< 2
2,6-Dinitrotoluene	< 2
Benzidine (estimated)	< 5
3,3'-Dichlorobenzidine	< 1
Pyridine	< 5
Azobenzene	< 1

LABORATORY REPORT

EAI ID#: **139940**

Client: **HTE Northeast, Inc.**

Client Designation: **16110D Nashua Broad St. Parkway | 5198J**

Sample ID:	MW P99
Lab Sample ID:	139940.01
Matrix:	aqueous
Date Sampled:	1/20/15
Date Received:	1/20/15
Units:	ug/l
Date of Extraction/Preparation	1/21/15
Date of Analysis:	1/21/15
Analyst:	JMR
Method:	8270D
Dilution Factor:	1
Carbazole	< 1
Dimethylphthalate	< 1
Diethylphthalate	< 5
Di-n-butylphthalate	< 5
Butylbenzylphthalate	< 5
bis(2-Ethylhexyl)phthalate	< 5
Di-n-octylphthalate	< 5
Dibenzofuran	< 1
Naphthalene	< 0.1
2-Methylnaphthalene	< 0.1
Acenaphthylene	< 0.1
Acenaphthene	< 0.1
Fluorene	< 0.1
Phenanthrene	< 0.1
Anthracene	< 0.1
Fluoranthene	< 0.1
Pyrene	< 0.1
Benzo[a]anthracene	< 0.1
Chrysene	< 0.1
Benzo[b]fluoranthene	< 0.1
Benzo[k]fluoranthene	< 0.1
Benzo[a]pyrene	< 0.1
Indeno[1,2,3-cd]pyrene	< 0.1
Dibenz[a,h]anthracene	< 0.1
Benzo[g,h,i]perylene	< 0.1
2-Fluorophenol (surr)	**31 %R**
Phenol-d6 (surr)	**21 %R**
2,4,6-Tribromophenol (surr)	**89 %R**
Nitrobenzene-D5 (surr)	**57 %R**
2-Fluorobiphenyl (surr)	**65 %R**
p-Terphenyl-D14 (surr)	**75 %R**

LABORATORY REPORT

EAI ID#: **139940**

Client: **HTE Northeast, Inc.**

Client Designation: **16110D Nashua Broad St. Parkway | 5198J**

Sample ID:	MW P99
Lab Sample ID:	139940.01
Matrix:	aqueous
Date Sampled:	1/20/15
Date Received:	1/20/15
Units:	mg/L
Date of Extraction/Prep:	1/26/15
Date of Analysis:	1/26/15
Analyst:	SS
Method:	1664A
Dilution Factor:	1
TPH(SGTHEM)	< 5

LABORATORY REPORT

EAI ID#: **139940**

Client: **HTE Northeast, Inc.**

Client Designation: **16110D Nashua Broad St. Parkway | 5198J**

Sample ID:	MW P99

Lab Sample ID:	139940.01
Matrix:	aqueous
Date Sampled:	1/20/15
Date Received:	1/20/15
Units:	ug/l
Date of Extraction/Prep:	1/23/15
Date of Analysis:	1/26/15
Analyst:	JCS
Method:	608
Dilution Factor:	1

PCB-1016	< 0.2
PCB-1221	< 0.2
PCB-1232	< 0.2
PCB-1242	< 0.2
PCB-1248	< 0.2
PCB-1254	< 0.2
PCB-1260	< 0.2
PCB-1262	< 0.2
PCB-1268	< 0.2
TMX (surr)	**84 %R**
DCB (surr)	**61 %R**

Acid clean-up was performed on the samples and associated batch QC.

LABORATORY REPORT

EAI ID#: **139940**

Client: **HTE Northeast, Inc.**

Client Designation: **16110D Nashua Broad St. Parkway | 5198J**

Sample ID: MW P99

Lab Sample ID: 139940.01
Matrix: aqueous
Date Sampled: 1/20/15
Date Received: 1/20/15

			Analysis			
		Units	Date	Time	Method	Analyst
Solids Suspended	**33**	mg/L	01/22/15	9:15	2540D-97	SCW
Chloride	**57**	mg/L	01/21/15	15:48	4500CIE-97	KD
Cyanide Total	< 0.01	mg/L	01/23/15	13:48	ASTM D7511	KD
Total Residual Chlorine	**0.55**	mg/L	01/20/15	17:00	4500ClG-00	JL

LABORATORY REPORT

EAI ID#: **139940**

Client: **HTE Northeast, Inc.**

Client Designation: **16110D Nashua Broad St. Parkway | 5198J**

Sample ID: MW P99

Lab Sample ID: 139940.01
Matrix: aqueous
Date Sampled: 1/20/15
Date Received: 1/20/15

		Analytical Matrix	Units	Date of Analysis	Method	Analyst
Antimony	**0.0021**	AqTot	mg/L	1/21/15	200.8	DS
Arsenic	**0.012**	AqTot	mg/L	1/21/15	200.8	DS
Cadmium	< 0.0002	AqTot	mg/L	1/21/15	200.8	DS
Chromium	**0.001**	AqTot	mg/L	1/21/15	200.8	DS
Copper	**0.0038**	AqTot	mg/L	1/21/15	200.8	DS
Iron	**1.1**	AqTot	mg/L	1/21/15	200.8	DS
Lead	**0.0014**	AqTot	mg/L	1/21/15	200.8	DS
Nickel	**0.0076**	AqTot	mg/L	1/21/15	200.8	DS
Selenium	< 0.001	AqTot	mg/L	1/21/15	200.8	DS
Silver	< 0.0002	AqTot	mg/L	1/21/15	200.8	DS
Zinc	**0.17**	AqTot	mg/L	1/21/15	200.8	DS
Chromium (III)	< 0.01	AqTot	mg/L	1/21/15	200.8	DS
Chromium (VI)	< 0.01	AqTot	mg/L	1/20/15	7196A	DS

Maine Environmental Laboratory

Report of Analyses

One Main Street Yarmouth, Maine 04096 Tel.: (207) 846-6569 Fax: (207) 846-9066 Email: melab@mel-lab.com

Eastern Analytical, Inc.
25 Chenell Drive
Concord, NH 03301

February 3, 2015

Report No.: EAI396-15

Enclosed are the results of the analyses requested for your samples as received by the laboratory. Samples were received in acceptable condition and analyzed within method holding times. All quality control data was within laboratory acceptance limits unless noted. The Limit of Quantitation (LOQ) is the minimum level for reporting quantitative data. The Limit of Detection (LOD) is the minimum level for reporting estimated data. Data reported between the Limit of Quantitation and Limit of Detection are J flagged as estimated. Maine Environmental Laboratory is certified by Maine (cert. #2012035) and New Hampshire NELAP (NH ELAP) (cert. #2031). A list of certified parameters is available on request. The results reported herein conform to the most current NELAP standards where applicable unless otherwise narrated in this report. This report shall not be reproduced except in full without the written consent of the laboratory.

The complete report consists of the following sections:

Maine Environmental Laboratory report
Chain of Custody form

References

EPA - EPA600/4-79-020, Methods for Chemical Analysis of Water and Wastes, USEPA, Cincinnati, Ohio, March 1983.
SW8- SW846, Test Methods for Evaluating Solid Waste, Physical/Chemical Methods, USEPA, third edition. Updates I-IV, 2007.
STM - Standard Methods for the Examination of Water and Wastewater, 18th edition, APHA,AWWA,WPCF, 1992.
CLP - USEPA CLP Statement of Work for Inorganic Superfund Methods, ISM01.2, Exh. D, Sec. 1.6, Jan. 2010.
AOA - Official Methods of Analysis of the Association of Official Analytical Chemists, 14th edition, 1984.
EPA2 - EPA/600R-94/111, Methods for the Determination of Metals in Environmental Samples, Supplement 1, May, 1994.
EPA1 - EPA/600/R-93/100 Methods for the Determination of Inorganic Substances in Environmental Samples, Aug. 1993.
HACH - Chemical Oxygen Demand, Method 8000, Hach Handbook of Water Analysis, Hach Chemical Company, 1979.

Authorized signature Jacquelyn R. Villinski

Jacquelyn R. Villinski, Laboratory Director

Maine Environmental Laboratory

One Main Street Yarmouth, Maine 04096 Tel.: (207) 846-6569 Fax: (207) 846-9066 Email: melab@mel-lab.com

Report of Analyses

Eastern Analytical, Inc.
25 Chenell Drive
Concord, NH 03301

February 3, 2015

Report No:	EAI396-15	Sampler:	No Data
Date received:	01/23/15	Sample matrix:	Aqueous
Project ID:	139940	Method:	3112B
		Reference:	STM

Total Mercury

Sample Identification	Results	Units	Date Analyzed	LOD	LOQ	Date Sampled	Laboratory ID
MW P99	0.0002 J	mg/L	02/03/15	0.0002	0.0005	01/20/15	EAI39615-01

ND = not detected J = estimated B = detected in blank S = DLs increased due to sample matrix

EAI 39L-14 -15

CHAIN-OF-CUSTODY RECORD

eastern analytical
professional laboratory services

EAI SRB# **139940**

Sample ID	Date Sampled	Matrix	aParameters	Sample Notes
MW P99	1/20/2015 12:00	aqueous	Mercury Cold Vapor SM3112B (MEL)	

EAI SRB# **139940** Project State: NH
Project ID: 4385

Company Maine Environmental
Address One Main Street
Address Yarmouth, ME 04096
Account #
Phone # 207-846-6569
Fax Number 207-846-9066

Results Needed by: Preferred date Std.
QC Deliverables
☒ A ☐ A+ ☐ B ☐ B+ ☐ C ☐ P

Notes about project:
Email pdf of results and invoice to customerservice@eailabs.com.

Eastern Analytical Inc. PO Number: 42574

Please call prior to analyzing, if RUSH surcharges will be applied.

Samples Collected by:

Relinquished by	Date/Time	Received by
[illegible]	01/23/15 7:00	H Larson
H Larson	1/23 11:15	[illegible]

Relinquished by Date/Time Received by

Eastern Analytical, Inc. 25 Chenell Dr. Concord, NH 03301 · Phone: (603)228-0525 1-800-287-0525 · Fax: (603)228-4591

As a subcontract lab to EAI, you will defend, indemnify and hold Eastern Analytical, Inc., its officers, employees, and agents harmless from and against any and all liability, loss, expense or claims for injury or damages arising out of the performance against this chain of custody but only in proportion to and to the extent such liability, loss, expense, or claims for injury or damages are caused by or result from the negligent or intentional acts or omissions of you as a subcontract lab, your officers, agents or employees

Page 1 of 1

Chain-of-Custody Record

Bold Fields Required. Please Circle Requested Analysis.

For Lab Use Only: 139940

15

Sample I.D.	Sampling Date/Time *If Composite, Indicate Both Start & Finish Date/Time	Matrix (see below)	Grab/*Composite	VOC: 524.2 BTEX	VOC: 524.2 MTBE only	VOC: 524.2 VTICs	VOC: 8260B 624 4-Dioxane	VOC: 8021B BTEX Halos	VOC: 8015B GRO MAVPH	SVOC: 8270D 625 SVTICs EDB DBCP	SVOC: ABN A BN PAH	SVOC: TPH8100 LI L2	SVOC: 8015B DRO MAEPH	SVOC: Pest 608 PCB 608	SVOC: Pest 8081A PCB 8082	SVOC: Oil & Grease 1664 TPH 1664	TCLP: TCLP 1311 ABN Metals VOC Pest Herb	Metals: Dissolved Metals (List Below)	Metals: Total Metals (List Below)	Inorganics: TS TSS TDS Spec. Con.	Inorganics: Br Cl F SO_4 NO_2 NO_3 NO_2	Inorganics: BOD CBOD T. Alk.	Inorganics: TKN NH_3 T. Phos. O. Phos.	Inorganics: pH T. Res. Chlorine	Inorganics: COD Phenols TOC DOC	Inorganics: Total Cyanide Total Sulfide	Inorganics: Reactive Cyanide Reactive Sulfide Flashpoint Ignitability	Micro: Total Coliform E. Coli Fecal Coliform	Micro: Enterococci Heterotrophic Plate Count	Other: CV Hg	Other: Cr3, Cr6	Other: Residual Cl-	# of Containers	Notes MeOH Vial #
MW P99	1/20 1200									✓				✓		✓				✓	✓					✓			✓	✓	✓	16	

Matrix: A-Air; S-Soil; GW-Ground Water; SW-Surface Water; DW-Drinking Water; WW-Waste Water

Preservative: H-HCL; N-HNO_3; S-H_2SO_4; Na-NaOH; M-MEOH

Project Manager: Roger Keilig

Company: HTE Northeast Inc.

Address: 2 Cote Lane

City: Bedford State: NH Zip: 03110

Phone: 668 1654 Ext.:

Fax:

E-Mail:

Site Name: Nashua Broad St Parkway

Project #: 51985

State: NH MA ME VT Other:

Regulatory Program: NPDES: RGP POTW Stormwater or GWP, Oil Fund, Brownfield or Other:

Quote #: PO #:

Date Needed:

QA/QC Reporting Level

A B C

OR

Presumptive Certainty

Reporting Options

Prelims: Yes or No

If Yes: Fax or PDF

Electronic Options

No Fax E-Mail PDF Equis

Temp. 8.4 °C

Ice? Yes No

Sampler(s): P Ryan Kramer

Relinquished By:	Date:	Time:	Received By:
[signature]	1/20	1:45	[signature]

Metals: 8 RCRA 13 PP Fe, Mn Pb, Cu

Other Metals:

Samples Field Filtered? ☑ Yes ☐ No

Notes: (ie: Special Detection Limits, Billing Info, If Different)

Full RGP

* Metals field filtered? RGP usually total. OK to split

Site History: Total Met. per R. Keilig

Suspected Contamination:

Field Readings:

Eastern Analytical, Inc.
Professional laboratory & drilling services
25 Chenell Drive | Concord, NH 03301 | Tel: 603.228.0525 | 1.800.287.0525 | Fax: 603.228.4591 | E-Mail: customerservice@eailabs.com | www.eailabs.com

(White: Original Green: Project Manager)

Eastern Analytical, Inc.

professional laboratory & drilling services

Kate Emma Schlosser
Sanborn, Head & Associates, Inc. (NH)
20 Foundry Street
Concord, NH 03301

Subject: Laboratory Report
Eastern Analytical, Inc. ID: 123046
Client Identification: Broad St. RGP | 3474.00
Date Received: 7/31/2013

Report revision/reissue: Revision, replaces report dated 8/7/2013

Revision information: The Total Dichlorobenzenes compound has been inserted within the VOCs8260B report.

Dear Ms. Schlosser:

Enclosed please find the laboratory report for the above identified project. All analyses were performed in accordance with our QA/QC Program. Unless otherwise stated, holding times, preservation techniques, container types, and sample conditions adhered to EPA Protocol. Samples which were collected by Eastern Analytical, Inc. (EAI) were collected in accordance with approved EPA procedures. Eastern Analytical, Inc. certifies that the enclosed test results meet all requirements of NELAP and other applicable state certifications. Please refer to our website at www.eailabs.com for a copy of our NELAP certificate and accredited parameters.

The following standard abbreviations and conventions apply to all EAI reports:

Solid samples are reported on a dry weight basis, unless otherwise noted
< : "less than" followed by the reporting limit
> : "greater than" followed by the reporting limit
%R : % Recovery

Eastern Analytical Inc. maintains certification in the following states: Connecticut (PH-0492), Maine (NH005), Massachusetts (M-NH005), New Hampshire/NELAP (1012), Rhode Island (269) and Vermont (VT1012).

The following information is contained within this report: Sample Conditions summary, Analytical Results/Data, Quality Control data (if requested) and copies of the Chain of Custody. This report may not be reproduced except in full, without the the written approval of the laboratory.

If you have any questions regarding the results contained within, please feel free to directly contact me or the chemist(s) who performed the testing in question. Unless otherwise requested, we will dispose of the sample(s) 30 days from the sample receipt date.

We appreciate this opportunity to be of service and look forward to your continued patronage.

Sincerely,

Michael Swett for

Lorraine Olashaw, Lab Director | 8/14/13 Date | 27 # of pages (excluding cover letter)

SAMPLE CONDITIONS PAGE

EAI ID#: **123046**

Client: **Sanborn, Head & Associates, Inc. (NH)**

Client Designation: **Broad St. RGP | 3474.00**

Temperature upon receipt (°C): 8 **Received on ice or cold packs (Yes/No): Y**

Acceptable temperature range (°C): 0-6

Lab ID	Sample ID	Date Received	Date Sampled	Sample Matrix	% Dry Weight	Exceptions/Comments (other than thermal preservation)
123046.01	TP111A	7/31/13	7/31/13	aqueous		Adheres to Sample Acceptance Policy
123046.02	Trip Blank 8260B	7/31/13	7/16/13	aqueous		Adheres to Sample Acceptance Policy
123046.03	Trip Blank 1,4 Dioxane	7/31/13	6/20/13	aqueous		Adheres to Sample Acceptance Policy

Samples were properly preserved and the pH measured when applicable unless otherwise noted. Analysis of solids for pH, Flashpoint, Ignitibility, Paint Filter, Corrosivity, Conductivity and Specific Gravity are reported on an "as received" basis.
Immediate analyses, pH, Total Residual Chlorine, Dissolved Oxygen and Sulfite, performed at the laboratory were run outside of the recommended 15 minute hold time.
All results contained in this report relate only to the above listed samples.
References include:
1) EPA 600/4-79-020, 1983
2) Standard Methods for Examination of Water and Wastewater,20th Edition, 1998 and 22nd Edition, 2012
3) Test Methods for Evaluating Solid Waste SW 846 3rd Edition including updates IVA and IVB
4) Hach Water Analysis Handbook, 2nd edition, 1992

LABORATORY REPORT

EAI ID#: **123046**

Client: **Sanborn, Head & Associates, Inc. (NH)**

Client Designation: **Broad St. RGP | 3474.00**

Sample ID:	TP111A	Trip Blank 8260B
Lab Sample ID:	123046.01	123046.02
Matrix:	aqueous	aqueous
Date Sampled:	7/31/13	7/16/13
Date Received:	7/31/13	7/31/13
Units:	ug/l	ug/l
Date of Analysis:	8/1/13	8/1/13
Analyst:	KJP	KJP
Method:	8260B	8260B
Dilution Factor:	1	1
Dichlorodifluoromethane	< 5	< 5
Chloromethane	< 2	< 2
Vinyl chloride	< 2	< 2
Bromomethane	< 2	< 2
Chloroethane	< 5	< 5
Trichlorofluoromethane	< 5	< 5
Diethyl Ether	< 5	< 5
Acetone	< 10	< 10
1,1-Dichloroethene	< 1	< 1
tert-Butyl Alcohol (TBA)	< 30	< 30
Methylene chloride	< 5	< 5
Carbon disulfide	< 5	< 5
Methyl-t-butyl ether(MTBE)	< 5	< 5
Ethyl-t-butyl ether(ETBE)	< 5	< 5
Isopropyl ether(DIPE)	< 5	< 5
tert-amyl methyl ether(TAME)	< 5	< 5
trans-1,2-Dichloroethene	< 2	< 2
1,1-Dichloroethane	< 2	< 2
2,2-Dichloropropane	< 2	< 2
cis-1,2-Dichloroethene	< 2	< 2
2-Butanone(MEK)	< 10	< 10
Bromochloromethane	< 2	< 2
Tetrahydrofuran(THF)	< 10	< 10
Chloroform	< 2	< 2
1,1,1-Trichloroethane	< 2	< 2
Carbon tetrachloride	< 2	< 2
1,1-Dichloropropene	< 2	< 2
Benzene	< 1	< 1
1,2-Dichloroethane	< 2	< 2
Trichloroethene	< 2	< 2
1,2-Dichloropropane	< 2	< 2
Dibromomethane	< 2	< 2
Bromodichloromethane	< 0.5	< 0.5
1,4-Dioxane	< 50	< 50
4-Methyl-2-pentanone(MIBK)	< 10	< 10
cis-1,3-Dichloropropene	< 2	< 2
Toluene	< 1	< 1
trans-1,3-Dichloropropene	< 2	< 2
1,1,2-Trichloroethane	< 2	< 2
2-Hexanone	< 10	< 10
Tetrachloroethene	< 2	< 2
1,3-Dichloropropane	< 2	< 2
Dibromochloromethane	< 2	< 2
1,2-Dibromoethane(EDB)	< 2	< 2
Chlorobenzene	< 2	< 2
1,1,1,2-Tetrachloroethane	< 2	< 2
Ethylbenzene	< 1	< 1

LABORATORY REPORT

EAI ID#: **123046**

Client: **Sanborn, Head & Associates, Inc. (NH)**

Client Designation: **Broad St. RGP | 3474.00**

Sample ID:	TP111A	Trip Blank 8260B
Lab Sample ID:	123046.01	123046.02
Matrix:	aqueous	aqueous
Date Sampled:	7/31/13	7/16/13
Date Received:	7/31/13	7/31/13
Units:	ug/l	ug/l
Date of Analysis:	8/1/13	8/1/13
Analyst:	KJP	KJP
Method:	8260B	8260B
Dilution Factor:	1	1
mp-Xylene	< 1	< 1
o-Xylene	< 1	< 1
Styrene	< 1	< 1
Bromoform	< 2	< 2
IsoPropylbenzene	< 1	< 1
Bromobenzene	< 2	< 2
1,1,2,2-Tetrachloroethane	< 2	< 2
1,2,3-Trichloropropane	< 2	< 2
n-Propylbenzene	< 1	< 1
2-Chlorotoluene	< 2	< 2
4-Chlorotoluene	< 2	< 2
1,3,5-Trimethylbenzene	< 1	< 1
tert-Butylbenzene	< 1	< 1
1,2,4-Trimethylbenzene	< 1	< 1
sec-Butylbenzene	< 1	< 1
1,3-Dichlorobenzene	< 1	< 1
p-Isopropyltoluene	< 1	< 1
1,4-Dichlorobenzene	< 1	< 1
1,2-Dichlorobenzene	< 1	< 1
n-Butylbenzene	< 1	< 1
Total Dichlorobenzenes	< 1	< 1
1,2-Dibromo-3-chloropropane	< 2	< 2
1,3,5-Trichlorobenzene	< 1	< 1
1,2,4-Trichlorobenzene	< 1	< 1
Hexachlorobutadiene	< 0.5	< 0.5
Naphthalene	< 5	< 5
1,2,3-Trichlorobenzene	< 1	< 1
4-Bromofluorobenzene (surr)	**95 %R**	**96 %R**
1,2-Dichlorobenzene-d4 (surr)	**103 %R**	**104 %R**
Toluene-d8 (surr)	**100 %R**	**99 %R**

QC REPORT

EAI ID#: **123046**

Client: **Sanborn, Head & Associates, Inc. (NH)**

Client Designation: **Broad St. RGP | 3474.00**

Parameter Name	Blank	LCS	LCSD	Analysis Date	Units	Limits	RPD	Method
Dichlorodifluoromethane	< 5	16 (78 %R)	15 (76 %R) (3 RPD)	8/1/2013	ug/l	40 - 160	20	8260B
Chloromethane	< 2	20 (100 %R)	19 (97 %R) (3 RPD)	8/1/2013	ug/l	40 - 160	20	8260B
Vinyl chloride	< 2	19 (93 %R)	18 (89 %R) (4 RPD)	8/1/2013	ug/l	70 - 130	20	8260B
Bromomethane	< 2	22 (112 %R)	22 (112 %R) (0 RPD)	8/1/2013	ug/l	40 - 160	20	8260B
Chloroethane	< 5	20 (102 %R)	20 (99 %R) (3 RPD)	8/1/2013	ug/l	70 - 130	20	8260B
Trichlorofluoromethane	< 5	20 (102 %R)	20 (98 %R) (4 RPD)	8/1/2013	ug/l	70 - 130	20	8260B
Diethyl Ether	< 5	22 (111 %R)	22 (110 %R) (1 RPD)	8/1/2013	ug/l	70 - 130	20	8260B
Acetone	< 10	20 (101 %R)	20 (102 %R) (1 RPD)	8/1/2013	ug/l	40 - 160	20	8260B
1,1-Dichloroethene	< 1	20 (102 %R)	20 (98 %R) (4 RPD)	8/1/2013	ug/l	70 - 130	20	8260B
tert-Butyl Alcohol (TBA)	< 30	90 (93 %R)	100 (100 %R) (7 RPD)	8/1/2013	ug/l	70 - 130	20	8260B
Methylene chloride	< 5	20 (101 %R)	20 (100 %R) (1 RPD)	8/1/2013	ug/l	70 - 130	20	8260B
Carbon disulfide	< 5	20 (102 %R)	20 (99 %R) (3 RPD)	8/1/2013	ug/l	70 - 130	20	8260B
Methyl-t-butyl ether(MTBE)	< 5	21 (107 %R)	21 (107 %R) (0 RPD)	8/1/2013	ug/l	70 - 130	20	8260B
Ethyl-t-butyl ether(ETBE)	< 5	22 (109 %R)	21 (107 %R) (2 RPD)	8/1/2013	ug/l	70 - 130	20	8260B
Isopropyl ether(DIPE)	< 5	21 (106 %R)	21 (105 %R) (1 RPD)	8/1/2013	ug/l	70 - 130	20	8260B
tert-amyl methyl ether(TAME)	< 5	23 (113 %R)	22 (111 %R) (2 RPD)	8/1/2013	ug/l	70 - 130	20	8260B
trans-1,2-Dichloroethene	< 2	20 (102 %R)	20 (101 %R) (1 RPD)	8/1/2013	ug/l	70 - 130	20	8260B
1,1-Dichloroethane	< 2	21 (105 %R)	21 (104 %R) (1 RPD)	8/1/2013	ug/l	70 - 130	20	8260B
2,2-Dichloropropane	< 2	22 (109 %R)	21 (104 %R) (5 RPD)	8/1/2013	ug/l	70 - 130	20	8260B
cis-1,2-Dichloroethene	< 2	21 (103 %R)	20 (100 %R) (3 RPD)	8/1/2013	ug/l	70 - 130	20	8260B
2-Butanone(MEK)	< 10	20 (97 %R)	20 (104 %R) (7 RPD)	8/1/2013	ug/l	40 - 160	20	8260B
Bromochloromethane	< 2	20 (102 %R)	20 (102 %R) (0 RPD)	8/1/2013	ug/l	70 - 130	20	8260B
Tetrahydrofuran(THF)	< 10	20 (94 %R)	20 (100 %R) (6 RPD)	8/1/2013	ug/l	70 - 130	20	8260B
Chloroform	< 2	20 (98 %R)	19 (96 %R) (2 RPD)	8/1/2013	ug/l	70 - 130	20	8260B
1,1,1-Trichloroethane	< 2	22 (108 %R)	21 (105 %R) (3 RPD)	8/1/2013	ug/l	70 - 130	20	8260B
Carbon tetrachloride	< 2	21 (107 %R)	21 (103 %R) (4 RPD)	8/1/2013	ug/l	70 - 130	20	8260B
1,1-Dichloropropene	< 2	20 (101 %R)	20 (100 %R) (1 RPD)	8/1/2013	ug/l	70 - 130	20	8260B
Benzene	< 1	21 (106 %R)	21 (103 %R) (3 RPD)	8/1/2013	ug/l	70 - 130	20	8260B
1,2-Dichloroethane	< 2	21 (103 %R)	20 (101 %R) (2 RPD)	8/1/2013	ug/l	70 - 130	20	8260B
Trichloroethene	< 2	20 (102 %R)	20 (101 %R) (1 RPD)	8/1/2013	ug/l	70 - 130	20	8260B
1,2-Dichloropropane	< 2	21 (105 %R)	21 (103 %R) (2 RPD)	8/1/2013	ug/l	70 - 130	20	8260B
Dibromomethane	< 2	21 (104 %R)	21 (105 %R) (1 RPD)	8/1/2013	ug/l	70 - 130	20	8260B
Bromodichloromethane	< 0.5	21 (107 %R)	21 (105 %R) (2 RPD)	8/1/2013	ug/l	70 - 130	20	8260B
1,4-Dioxane	< 50	< 50 (91 %R)	< 50 (91 %R) (0 RPD)	8/1/2013	ug/l	40 - 160	20	8260B
4-Methyl-2-pentanone(MIBK)	< 10	20 (90 %R)	20 (96 %R) (6 RPD)	8/1/2013	ug/l	40 - 160	20	8260B
cis-1,3-Dichloropropene	< 2	21 (105 %R)	21 (103 %R) (2 RPD)	8/1/2013	ug/l	70 - 130	20	8260B
Toluene	< 1	22 (110 %R)	21 (106 %R) (4 RPD)	8/1/2013	ug/l	70 - 130	20	8260B
trans-1,3-Dichloropropene	< 2	19 (95 %R)	19 (94 %R) (1 RPD)	8/1/2013	ug/l	70 - 130	20	8260B
1,1,2-Trichloroethane	< 2	21 (105 %R)	21 (105 %R) (0 RPD)	8/1/2013	ug/l	70 - 130	20	8260B
2-Hexanone	< 10	20 (98 %R)	20 (98 %R) (0 RPD)	8/1/2013	ug/l	40 - 160	20	8260B
Tetrachloroethene	< 2	22 (112 %R)	22 (108 %R) (4 RPD)	8/1/2013	ug/l	70 - 130	20	8260B
1,3-Dichloropropane	< 2	21 (104 %R)	20 (101 %R) (3 RPD)	8/1/2013	ug/l	70 - 130	20	8260B
Dibromochloromethane	< 2	19 (95 %R)	19 (95 %R) (0 RPD)	8/1/2013	ug/l	70 - 130	20	8260B
1,2-Dibromoethane(EDB)	< 2	21 (105 %R)	21 (104 %R) (1 RPD)	8/1/2013	ug/l	70 - 130	20	8260B
Chlorobenzene	< 2	21 (106 %R)	20 (102 %R) (4 RPD)	8/1/2013	ug/l	70 - 130	20	8260B
1,1,1,2-Tetrachloroethane	< 2	22 (109 %R)	21 (105 %R) (4 RPD)	8/1/2013	ug/l	70 - 130	20	8260B

QC REPORT

EAI ID#: **123046**

Client: **Sanborn, Head & Associates, Inc. (NH)**

Client Designation: **Broad St. RGP | 3474.00**

Parameter Name	Blank	LCS	LCSD	Analysis Date	Units	Limits	RPD	Method
Ethylbenzene	< 1	22 (110 %R)	21 (107 %R) (3 RPD)	8/1/2013	ug/l	70 - 130	20	8260B
mp-Xylene	< 1	43 (108 %R)	42 (106 %R) (2 RPD)	8/1/2013	ug/l	70 - 130	20	8260B
o-Xylene	< 1	21 (106 %R)	21 (103 %R) (3 RPD)	8/1/2013	ug/l	70 - 130	20	8260B
Styrene	< 1	23 (117 %R)	23 (113 %R) (3 RPD)	8/1/2013	ug/l	70 - 130	20	8260B
Bromoform	< 2	19 (93 %R)	18 (92 %R) (1 RPD)	8/1/2013	ug/l	70 - 130	20	8260B
IsoPropylbenzene	< 1	24 (119 %R)	23 (117 %R) (2 RPD)	8/1/2013	ug/l	70 - 130	20	8260B
Bromobenzene	< 2	20 (101 %R)	20 (102 %R) (1 RPD)	8/1/2013	ug/l	70 - 130	20	8260B
1,1,2,2-Tetrachloroethane	< 2	20 (101 %R)	21 (106 %R) (5 RPD)	8/1/2013	ug/l	70 - 130	20	8260B
1,2,3-Trichloropropane	< 2	19 (94 %R)	21 (103 %R) (9 RPD)	8/1/2013	ug/l	70 - 130	20	8260B
n-Propylbenzene	< 1	21 (107 %R)	22 (109 %R) (2 RPD)	8/1/2013	ug/l	70 - 130	20	8260B
2-Chlorotoluene	< 2	20 (101 %R)	21 (104 %R) (3 RPD)	8/1/2013	ug/l	70 - 130	20	8260B
4-Chlorotoluene	< 2	21 (104 %R)	21 (107 %R) (3 RPD)	8/1/2013	ug/l	70 - 130	20	8260B
1,3,5-Trimethylbenzene	< 1	21 (106 %R)	22 (109 %R) (3 RPD)	8/1/2013	ug/l	70 - 130	20	8260B
tert-Butylbenzene	< 1	21 (107 %R)	22 (109 %R) (2 RPD)	8/1/2013	ug/l	70 - 130	20	8260B
1,2,4-Trimethylbenzene	< 1	21 (106 %R)	22 (108 %R) (2 RPD)	8/1/2013	ug/l	70 - 130	20	8260B
sec-Butylbenzene	< 1	21 (106 %R)	22 (108 %R) (2 RPD)	8/1/2013	ug/l	70 - 130	20	8260B
1,3-Dichlorobenzene	< 1	21 (107 %R)	22 (108 %R) (1 RPD)	8/1/2013	ug/l	70 - 130	20	8260B
p-Isopropyltoluene	< 1	22 (111 %R)	22 (112 %R) (1 RPD)	8/1/2013	ug/l	70 - 130	20	8260B
1,4-Dichlorobenzene	< 1	22 (108 %R)	21 (107 %R) (1 RPD)	8/1/2013	ug/l	70 - 130	20	8260B
1,2-Dichlorobenzene	< 1	20 (102 %R)	21 (105 %R) (3 RPD)	8/1/2013	ug/l	70 - 130	20	8260B
n-Butylbenzene	< 1	22 (110 %R)	22 (110 %R) (0 RPD)	8/1/2013	ug/l	70 - 130	20	8260B
1,2-Dibromo-3-chloropropane	< 2	21 (105 %R)	23 (117 %R) (11 RPD)	8/1/2013	ug/l	70 - 130	20	8260B
1,3,5-Trichlorobenzene	< 1	21 (107 %R)	22 (109 %R) (2 RPD)	8/1/2013	ug/l	70 - 130	20	8260B
1,2,4-Trichlorobenzene	< 1	20 (101 %R)	21 (104 %R) (3 RPD)	8/1/2013	ug/l	70 - 130	20	8260B
Hexachlorobutadiene	< 0.5	17 (85 %R)	18 (89 %R) (5 RPD)	8/1/2013	ug/l	70 - 130	20	8260B
Naphthalene	< 5	19 (97 %R)	21 (106 %R) (9 RPD)	8/1/2013	ug/l	70 - 130	20	8260B
1,2,3-Trichlorobenzene	< 1	17 (85 %R)	18 (89 %R) (5 RPD)	8/1/2013	ug/l	70 - 130	20	8260B
4-Bromofluorobenzene (surr)	97 %R	101 %R	100 %R	8/1/2013	% Rec	70 - 130	20	8260B
1,2-Dichlorobenzene-d4 (surr)	103 %R	98 %R	99 %R	8/1/2013	% Rec	70 - 130	20	8260B
Toluene-d8 (surr)	98 %R	100 %R	100 %R	8/1/2013	% Rec	70 - 130	20	8260B

Samples were extracted and analyzed within holding time limits.
Instrumentation was calibrated in accordance with the method requirements.
The method blanks were free of contamination at the reporting limits.
Sample surrogate recoveries met the above stated criteria.
The associated matrix spikes and/or Laboratory Control Samples met acceptance criteria.
There were no exceptions in the analyses, unless noted.
*/! Flagged analyte recoveries deviated from the QA/QC limits. Any impact to data is addressed below.

LABORATORY REPORT

EAI ID#: **123046**

Client: **Sanborn, Head & Associates, Inc. (NH)**

Client Designation: **Broad St. RGP | 3474.00**

Sample ID:	TP111A	Trip Blank 1,4 Dioxane
Lab Sample ID:	123046.01	123046.03
Matrix:	aqueous	aqueous
Date Sampled:	7/31/13	6/20/13
Date Received:	7/31/13	7/31/13
Units:	ug/l	ug/l
Date of Analysis:	8/1/13	8/1/13
Analyst:	VG	VG
Method:	8260B SIM	8260B SIM
Dilution Factor:	1	1
1,4-Dioxane	< 0.25	< 0.25
4-Bromofluorobenzene (surr)	**114 %R**	**116 %R**
Toluene-d8 (surr)	**103 %R**	**98 %R**

Eastern Analytical, Inc. www.eailabs.com | 800.287.0525 | customerservice@eailabs.com

QC REPORT

EAI ID#: **123046**

Client: **Sanborn, Head & Associates, Inc. (NH)**

Client Designation: **Broad St. RGP | 3474.00**

Parameter Name	Blank	LCS	LCSD	Units	Date of Analysis	Limits	RPD	Method
1,4-Dioxane	< 0.25	4.2 (84 %R)	4.2 (84 %R) (0 RPD)	ug/l	8/1/13	70 - 130	20	8260B SIM
4-Bromofluorobenzene (surr)	114 %R	112 %R	114 %R	% Rec	8/1/13	70 - 130	50	8260B SIM
Toluene-d8 (surr)	99 %R	101 %R	98 %R	% Rec	8/1/13	70 - 130	50	8260B SIM

Samples were analyzed within holding times unless noted on the sample results page.
Instrumentation was calibrated in accordance with the method requirements.
The method blanks were free of contamination at the reporting limits.
The associated matrix spikes and/or Laboratory Control Samples met the above stated criteria.
Exceptions to the above statements are flagged or noted above or on the QC Narrative page.
*/! Flagged analyte recoveries deviated from the QA/QC limits.

LABORATORY REPORT

EAI ID#: **123046**

Client: **Sanborn, Head & Associates, Inc. (NH)**

Client Designation: **Broad St. RGP | 3474.00**

Sample ID:	TP111A
Lab Sample ID:	123046.01
Matrix:	aqueous
Date Sampled:	7/31/13
Date Received:	7/31/13
Units:	ug/l
Date of Extraction/Prep:	8/1/13
Date of Analysis:	8/1/13
Analyst:	JMR
Method:	8011/504
Dilution Factor:	1
1,2-Dibromoethane(EDB)	< 0.02
Dibromochloropropane (DBCP)	< 0.02
1,1,1,2-Tetrachloroethane (surr)	**88 %R**

QC REPORT

EAI ID#: **123046**

Client: **Sanborn, Head & Associates, Inc. (NH)**

Batch ID: 635109-46385/A080113EDBDB1

Client Designation: **Broad St. RGP | 3474.00**

Parameter Name	Blank	LCS	LCSD	Analysis Date	Units	Limits	RPD	Method
1,2-Dibromoethane(EDB)	< 0.02	0.092 (92 %R)	0.092 (92 %R) (0 RPD)	8/1/2013	ug/l	70 - 130	20	8011/504
Dibromochloropropane (DBCP)	< 0.02	0.089 (89 %R)	0.089 (89 %R) (0 RPD)	8/1/2013	ug/l	70 - 130	20	8011/504
1,1,1,2-Tetrachloroethane (surr)	86 %R	85 %R	86 %R	8/1/2013	% Rec	65 - 135	20	8011/504

Samples were extracted and analyzed within holding time limits.
Instrumentation was calibrated in accordance with the method requirements.
The method blanks were free of contamination at the reporting limits.
Sample surrogate recoveries met the above stated criteria.
The associated matrix spikes and/or Laboratory Control Samples met acceptance criteria.
There were no exceptions in the analyses, unless noted.
*/! Flagged analyte recoveries deviated from the QA/QC limits.

LABORATORY REPORT

EAI ID#: **123046**

Client: **Sanborn, Head & Associates, Inc. (NH)**

Client Designation: **Broad St. RGP | 3474.00**

Sample ID:	TP111A
Lab Sample ID:	123046.01
Matrix:	aqueous
Date Sampled:	7/31/13
Date Received:	7/31/13
Units:	ug/l
Date of Extraction/Preparation	8/1/13
Date of Analysis:	8/1/13
Analyst:	AR
Method:	8270D
Dilution Factor:	1
Phenol	< 1
2-Chlorophenol	< 1
2,4-Dichlorophenol	< 1
2,4,5-Trichlorophenol	< 1
2,4,6-Trichlorophenol	< 1
Pentachlorophenol	< 5
2-Nitrophenol	< 5
4-Nitrophenol	< 5
2,4-Dinitrophenol	< 5
2-Methylphenol	< 1
3/4-Methylphenol	< 1
2,4-Dimethylphenol	< 1
4-Chloro-3-methylphenol	< 1
4,6-Dinitro-2-methylphenol	< 5
Benzoic Acid	< 50
N-Nitrosodimethylamine	< 1
n-Nitroso-di-n-propylamine	< 1
n-Nitrosodiphenylamine	< 1
bis(2-Chloroethyl)ether	< 1
bis(2-chloroisopropyl)ether	< 1
bis(2-Chloroethoxy)methane	< 1
1,3-Dichlorobenzene	< 1
1,4-Dichlorobenzene	< 1
1,2-Dichlorobenzene	< 1
1,2,4-Trichlorobenzene	< 1
2-Chloronaphthalene	< 1
4-Chlorophenyl-phenylether	< 1
4-Bromophenyl-phenylether	< 1
Hexachloroethane	< 1
Hexachlorobutadiene	< 1
Hexachlorocyclopentadiene	< 5
Hexachlorobenzene	< 1
4-Chloroaniline	< 1
2-Nitroaniline	< 5
3-Nitroaniline	< 2
4-Nitroaniline	< 2
Benzyl alcohol	< 5
Nitrobenzene	< 1
Isophorone	< 1
2,4-Dinitrotoluene	< 2
2,6-Dinitrotoluene	< 2
Benzidine (estimated)	< 5
3,3'-Dichlorobenzidine	< 1
Pyridine	< 5
Azobenzene	< 1

LABORATORY REPORT

EAI ID#: **123046**

Client: **Sanborn, Head & Associates, Inc. (NH)**
Client Designation: **Broad St. RGP | 3474.00**

Sample ID:	TP111A
Lab Sample ID:	123046.01
Matrix:	aqueous
Date Sampled:	7/31/13
Date Received:	7/31/13
Units:	ug/l
Date of Extraction/Preparation	8/1/13
Date of Analysis:	8/1/13
Analyst:	AR
Method:	8270D
Dilution Factor:	1
Carbazole	< 1
Dimethylphthalate	< 1
Diethylphthalate	< 5
Di-n-butylphthalate	< 5
Butylbenzylphthalate	< 2
bis(2-Ethylhexyl)phthalate	< 5
Di-n-octylphthalate	< 5
Dibenzofuran	< 1
Naphthalene	< 0.1
2-Methylnaphthalene	< 0.1
Acenaphthylene	< 0.1
Acenaphthene	< 0.1
Fluorene	< 0.1
Phenanthrene	**0.10**
Anthracene	< 0.1
Fluoranthene	**0.18**
Pyrene	**0.15**
Benzo[a]anthracene	**0.13**
Chrysene	< 0.1
Benzo[b]fluoranthene	**0.13**
Benzo[k]fluoranthene	< 0.1
Benzo[a]pyrene	< 0.1
Indeno[1,2,3-cd]pyrene	< 0.1
Dibenz[a,h]anthracene	< 0.1
Benzo[g,h,i]perylene	< 0.1
2-Fluorophenol (surr)	**43 %R**
Phenol-d6 (surr)	**28 %R**
2,4,6-Tribromophenol (surr)	**80 %R**
Nitrobenzene-D5 (surr)	**76 %R**
2-Fluorobiphenyl (surr)	**75 %R**
p-Terphenyl-D14 (surr)	**78 %R**

QC REPORT

EAI ID#: **123046**

Client: **Sanborn, Head & Associates, Inc. (NH)**

Batch ID: 635109-51940/A080113ABN1

Client Designation: **Broad St. RGP | 3474.00**

Parameter Name	Blank	LCS	LCSD	Analysis Date	Units	Limits	RPD	Method
Phenol	< 1	16 (32 %R)	17 (34 %R) (6 RPD)	8/1/2013	ug/l	15 - 130	20	8270D
2-Chlorophenol	< 1	31 (63 %R)	35 (71 %R) (12 RPD)	8/1/2013	ug/l	30 - 130	20	8270D
2,4-Dichlorophenol	< 1	36 (72 %R)	39 (79 %R) (9 RPD)	8/1/2013	ug/l	30 - 130	20	8270D
2,4,5-Trichlorophenol	< 1	17 (69 %R)	19 (78 %R) (12 RPD)	8/1/2013	ug/l	30 - 130	20	8270D
2,4,6-Trichlorophenol	< 1	39 (78 %R)	44 (88 %R) (12 RPD)	8/1/2013	ug/l	30 - 130	20	8270D
Pentachlorophenol	< 5	41 (82 %R)	45 (91 %R) (10 RPD)	8/1/2013	ug/l	30 - 130	20	8270D
2-Nitrophenol	< 5	36 (72 %R)	41 (83 %R) (14 RPD)	8/1/2013	ug/l	30 - 130	20	8270D
4-Nitrophenol	< 5	18 (37 %R)	20 (40 %R) (8 RPD)	8/1/2013	ug/l	15 - 130	20	8270D
2,4-Dinitrophenol	< 5	38 (76 %R)	43 (85 %R) (11 RPD)	8/1/2013	ug/l	15 - 130	20	8270D
2-Methylphenol	< 1	14 (57 %R)	16 (62 %R) (8 RPD)	8/1/2013	ug/l	30 - 130	20	8270D
3/4-Methylphenol	< 1	13 (50 %R)	14 (56 %R) (11 RPD)	8/1/2013	ug/l	30 - 130	20	8270D
2,4-Dimethylphenol	< 1	35 (69 %R)	38 (77 %R) (11 RPD)	8/1/2013	ug/l	30 - 130	20	8270D
4-Chloro-3-methylphenol	< 1	38 (77 %R)	42 (85 %R) (10 RPD)	8/1/2013	ug/l	30 - 130	20	8270D
4,6-Dinitro-2-methylphenol	< 5	40 (80 %R)	45 (90 %R) (12 RPD)	8/1/2013	ug/l	30 - 130	20	8270D
Benzoic Acid	< 50	< 50 (25 %R)	< 50 (22 %R) (13 RPD)	8/1/2013	ug/l	15 - 140	20	8270D
N-Nitrosodimethylamine	< 1	12 (48 %R)	13 (52 %R) (8 RPD)	8/1/2013	ug/l	40 - 140	20	8270D
n-Nitroso-di-n-propylamine	< 1	17 (68 %R)	20 (79 %R) (15 RPD)	8/1/2013	ug/l	40 - 140	20	8270D
n-Nitrosodiphenylamine	< 1	21 (83 %R)	23 (93 %R) (11 RPD)	8/1/2013	ug/l	40 - 140	20	8270D
bis(2-Chloroethyl)ether	< 1	15 (61 %R)	17 (69 %R) (12 RPD)	8/1/2013	ug/l	40 - 140	20	8270D
bis(2-chloroisopropyl)ether	< 1	15 (58 %R)	16 (66 %R) (13 RPD)	8/1/2013	ug/l	40 - 140	20	8270D
bis(2-Chloroethoxy)methane	< 1	16 (63 %R)	18 (71 %R) (12 RPD)	8/1/2013	ug/l	40 - 140	20	8270D
1,3-Dichlorobenzene	< 1	11 (45 %R)	14 (55 %R) (20 RPD)	8/1/2013	ug/l	40 - 140	20	8270D
1,4-Dichlorobenzene	< 1	12 (46 %R)	14 (56 %R) (20 RPD)	8/1/2013	ug/l	40 - 140	20	8270D
1,2-Dichlorobenzene	< 1	12 (47 %R)	14 (57 %R) (19 RPD)	8/1/2013	ug/l	40 - 140	20	8270D
1,2,4-Trichlorobenzene	< 1	13 (51 %R)	15 (59 %R) (15 RPD)	8/1/2013	ug/l	40 - 140	20	8270D
2-Chloronaphthalene	< 1	15 (61 %R)	17 (69 %R) (12 RPD)	8/1/2013	ug/l	40 - 140	20	8270D
4-Chlorophenyl-phenylether	< 1	17 (68 %R)	19 (77 %R) (12 RPD)	8/1/2013	ug/l	40 - 140	20	8270D
4-Bromophenyl-phenylether	< 1	17 (67 %R)	19 (75 %R) (11 RPD)	8/1/2013	ug/l	40 - 140	20	8270D
Hexachloroethane	< 1	11 (44 %R)	14 (55 %R) (22 RPD) !	8/1/2013	ug/l	40 - 140	20	8270D
Hexachlorobutadiene	< 1	11 (45 %R)	14 (55 %R) (20 RPD)	8/1/2013	ug/l	40 - 140	20	8270D
Hexachlorocyclopentadiene	< 5	* 9.5 (38 %R)	12 (47 %R) (21 RPD) !	8/1/2013	ug/l	40 - 140	20	8270D
Hexachlorobenzene	< 1	17 (68 %R)	19 (75 %R) (10 RPD)	8/1/2013	ug/l	40 - 140	20	8270D
4-Chloroaniline	< 1	18 (72 %R)	18 (74 %R) (3 RPD)	8/1/2013	ug/l	15 - 140	20	8270D
2-Nitroaniline	< 5	18 (70 %R)	20 (79 %R) (12 RPD)	8/1/2013	ug/l	40 - 140	20	8270D
3-Nitroaniline	< 2	19 (76 %R)	20 (79 %R) (4 RPD)	8/1/2013	ug/l	40 - 140	20	8270D
4-Nitroaniline	< 2	17 (68 %R)	19 (74 %R) (8 RPD)	8/1/2013	ug/l	40 - 140	20	8270D
Benzyl alcohol	< 5	16 (65 %R)	17 (69 %R) (6 RPD)	8/1/2013	ug/l	40 - 140	20	8270D
Nitrobenzene	< 1	15 (62 %R)	18 (70 %R) (12 RPD)	8/1/2013	ug/l	40 - 140	20	8270D
Isophorone	< 1	18 (73 %R)	21 (83 %R) (13 RPD)	8/1/2013	ug/l	40 - 140	20	8270D
2,4-Dinitrotoluene	< 2	19 (75 %R)	21 (86 %R) (14 RPD)	8/1/2013	ug/l	40 - 140	20	8270D
2,6-Dinitrotoluene	< 2	19 (76 %R)	21 (84 %R) (10 RPD)	8/1/2013	ug/l	40 - 140	20	8270D
Benzidine (estimated)	< 5	18 (72 %R)	17 (68 %R) (6 RPD)	8/1/2013	ug/l	15 - 168	20	8270D
3,3'-Dichlorobenzidine	< 1	17 (69 %R)	19 (75 %R) (8 RPD)	8/1/2013	ug/l	40 - 140	20	8270D
Pyridine	< 5	13 (51 %R)	13 (52 %R) (2 RPD)	8/1/2013	ug/l	40 - 140	20	8270D
Azobenzene	< 1	17 (70 %R)	19 (77 %R) (10 RPD)	8/1/2013	ug/l	40 - 140	20	8270D
Carbazole	< 1	18 (73 %R)	20 (81 %R) (10 RPD)	8/1/2013	ug/l	40 - 140	20	8270D

QC REPORT

EAI ID#: **123046**

Client: **Sanborn, Head & Associates, Inc. (NH)**

Batch ID: 635109-51940/A080113ABN1

Client Designation: **Broad St. RGP | 3474.00**

Parameter Name	Blank	LCS	LCSD	Analysis Date	Units	Limits	RPD	Method
Dimethylphthalate	< 1	17 (70 %R)	19 (77 %R) (10 RPD)	8/1/2013	ug/l	40 - 140	20	8270D
Diethylphthalate	< 5	18 (73 %R)	20 (82 %R) (12 RPD)	8/1/2013	ug/l	40 - 140	20	8270D
Di-n-butylphthalate	< 5	19 (77 %R)	21 (85 %R) (10 RPD)	8/1/2013	ug/l	40 - 140	20	8270D
Butylbenzylphthalate	< 2	19 (77 %R)	21 (85 %R) (10 RPD)	8/1/2013	ug/l	40 - 140	20	8270D
bis(2-Ethylhexyl)phthalate	< 5	19 (74 %R)	20 (82 %R) (10 RPD)	8/1/2013	ug/l	40 - 140	20	8270D
Di-n-octylphthalate	< 5	18 (71 %R)	20 (78 %R) (9 RPD)	8/1/2013	ug/l	40 - 140	20	8270D
Dibenzofuran	< 1	16 (65 %R)	18 (73 %R) (12 RPD)	8/1/2013	ug/l	40 - 140	20	8270D
Naphthalene	< 0.1	15 (59 %R)	17 (66 %R) (11 RPD)	8/1/2013	ug/l	40 - 140	20	8270D
2-Methylnaphthalene	< 0.1	15 (58 %R)	17 (67 %R) (14 RPD)	8/1/2013	ug/l	40 - 140	20	8270D
Acenaphthylene	< 0.1	16 (64 %R)	19 (75 %R) (16 RPD)	8/1/2013	ug/l	40 - 140	20	8270D
Acenaphthene	< 0.1	16 (66 %R)	18 (73 %R) (10 RPD)	8/1/2013	ug/l	40 - 140	20	8270D
Fluorene	< 0.1	18 (71 %R)	20 (81 %R) (13 RPD)	8/1/2013	ug/l	40 - 140	20	8270D
Phenanthrene	< 0.1	18 (70 %R)	19 (78 %R) (11 RPD)	8/1/2013	ug/l	40 - 140	20	8270D
Anthracene	< 0.1	18 (71 %R)	19 (78 %R) (9 RPD)	8/1/2013	ug/l	40 - 140	20	8270D
Fluoranthene	< 0.1	19 (75 %R)	21 (83 %R) (10 RPD)	8/1/2013	ug/l	40 - 140	20	8270D
Pyrene	< 0.1	18 (72 %R)	20 (81 %R) (12 RPD)	8/1/2013	ug/l	40 - 140	20	8270D
Benzo[a]anthracene	< 0.1	18 (71 %R)	20 (79 %R) (11 RPD)	8/1/2013	ug/l	40 - 140	20	8270D
Chrysene	< 0.1	18 (70 %R)	20 (78 %R) (11 RPD)	8/1/2013	ug/l	40 - 140	20	8270D
Benzo[b]fluoranthene	< 0.1	18 (73 %R)	20 (82 %R) (12 RPD)	8/1/2013	ug/l	40 - 140	20	8270D
Benzo[k]fluoranthene	< 0.1	19 (75 %R)	21 (83 %R) (10 RPD)	8/1/2013	ug/l	40 - 140	20	8270D
Benzo[a]pyrene	< 0.1	18 (73 %R)	20 (80 %R) (9 RPD)	8/1/2013	ug/l	40 - 140	20	8270D
Indeno[1,2,3-cd]pyrene	< 0.1	19 (76 %R)	21 (84 %R) (10 RPD)	8/1/2013	ug/l	40 - 140	20	8270D
Dibenz[a,h]anthracene	< 0.1	19 (75 %R)	21 (83 %R) (10 RPD)	8/1/2013	ug/l	40 - 140	20	8270D
Benzo[g,h,i]perylene	< 0.1	18 (73 %R)	20 (81 %R) (10 RPD)	8/1/2013	ug/l	40 - 140	20	8270D
2-Fluorophenol (surr)	47 %R	43 %R	46 %R	8/1/2013	% Rec	21 - 110	20	8270D
Phenol-d6 (surr)	29 %R	28 %R	30 %R	8/1/2013	% Rec	15 - 94	20	8270D
2,4,6-Tribromophenol (surr)	80 %R	76 %R	80 %R	8/1/2013	% Rec	15 - 110	20	8270D
Nitrobenzene-D5 (surr)	79 %R	66 %R	75 %R	8/1/2013	% Rec	35 - 114	20	8270D
2-Fluorobiphenyl (surr)	71 %R	65 %R	73 %R	8/1/2013	% Rec	43 - 116	20	8270D
p-Terphenyl-D14 (surr)	80 %R	75 %R	83 %R	8/1/2013	% Rec	33 - 130	20	8270D

Samples were extracted and analyzed within holding time limits.
Instrumentation was calibrated in accordance with the method requirements.
The method blanks were free of contamination at the reporting limits.
Sample surrogate recoveries met the above stated criteria.
The associated matrix spikes and/or Laboratory Control Samples met acceptance criteria.
There were no exceptions in the analyses, unless noted.
*/!Flagged analyte recoveries deviated from the QA/QC limits.

Hexachlorocyclopentadiene exhibited recovery below acceptance limits in the LCS. Hexachlorocyclopentadiene was not detected in the sample.

LABORATORY REPORT

EAI ID#: **123046**

Client: **Sanborn, Head & Associates, Inc. (NH)**

Client Designation: **Broad St. RGP | 3474.00**

Sample ID:	TP111A
Lab Sample ID:	123046.01
Matrix:	aqueous
Date Sampled:	7/31/13
Date Received:	7/31/13
Units:	mg/L
Date of Extraction/Prep:	8/5/13
Date of Analysis:	8/5/13
Analyst:	SH
Method:	1664A
Dilution Factor:	1
TPH(SGTHEM)	< 5

QC REPORT

EAI ID#: **123046**

Client: **Sanborn, Head & Associates, Inc. (NH)**

Client Designation: **Broad St. RGP | 3474.00**

Parameter Name	Blank	LCS	LCSD	Analysis Date	Units	Limits	RPD	Method
TPH(SGTHEM)	< 5	17 (84 %R)	18 (90 %R) (7 RPD)	8/5/2013	mg/L	64 - 132	34	1664A

Samples were extracted and analyzed within holding time limits.
Instrumentation was calibrated in accordance with the method requirements.
The method blanks were free of contamination at the reporting limits.
Sample surrogate recoveries met the above stated criteria.
The associated matrix spikes and/or Laboratory Control Samples met acceptance criteria.
There were no exceptions in the analyses, unless noted.
*/! Flagged analyte recoveries deviated from the QA/QC limits. Any impact to data is addressed below .

LABORATORY REPORT

EAI ID#: **123046**

Client: **Sanborn, Head & Associates, Inc. (NH)**

Client Designation: **Broad St. RGP | 3474.00**

Sample ID:	TP111A
Lab Sample ID:	123046.01
Matrix:	aqueous
Date Sampled:	7/31/13
Date Received:	7/31/13
Units:	ug/l
Date of Extraction/Prep:	8/2/13
Date of Analysis:	8/5/13
Analyst:	JCS
Method:	608
Dilution Factor:	1

PCB-1016	< 0.3
PCB-1221	< 0.3
PCB-1232	< 0.3
PCB-1242	< 0.3
PCB-1248	< 0.3
PCB-1254	< 0.3
PCB-1260	< 0.3
TMX (surr)	**91 %R**
DCB (surr)	**50 %R**

QC REPORT

EAI ID#: **123046**

Client: **Sanborn, Head & Associates, Inc. (NH)**

Batch ID: 635110-47370/A080213E608P1

Client Designation: **Broad St. RGP | 3474.00**

Parameter Name	Blank	LCS	LCSD	Analysis Date	Units	Limits	RPD	Method
PCB-1016	< 0.3	* 2.3 (116 %R)	2.3 (113 %R) (3 RPD)	8/5/2013	ug/l	50 - 114	20	608
PCB-1221	< 0.3	< 0.3 (%R N/A)	< 0.3 (%R N/A) (RPD N/A)	8/5/2013	ug/l			608
PCB-1232	< 0.3	< 0.3 (%R N/A)	< 0.3 (%R N/A) (RPD N/A)	8/5/2013	ug/l			608
PCB-1242	< 0.3	< 0.3 (%R N/A)	< 0.3 (%R N/A) (RPD N/A)	8/5/2013	ug/l			608
PCB-1248	< 0.3	< 0.3 (%R N/A)	< 0.3 (%R N/A) (RPD N/A)	8/5/2013	ug/l			608
PCB-1254	< 0.3	< 0.3 (%R N/A)	< 0.3 (%R N/A) (RPD N/A)	8/5/2013	ug/l			608
PCB-1260	< 0.3	2.2 (108 %R)	2.1 (106 %R) (2 RPD)	8/5/2013	ug/l	8 - 127	20	608
TMX (surr)	96 %R	98 %R	94 %R	8/5/2013	% Rec	30 - 150		608
DCB (surr)	109 %R	114 %R	109 %R	8/5/2013	% Rec	30 - 150		608

Samples were extracted and analyzed within holding time limits.
Instrumentation was calibrated in accordance with the method requirements.
The method blanks were free of contamination at the reporting limits.
Sample surrogate recoveries met the above stated criteria.
The associated matrix spikes and/or Laboratory Control Samples met acceptance criteria.
There were no exceptions in the analyses, unless noted.
*/! Flagged analyte recoveries deviated from the QA/QC limits.

PCB 1016 recovery exceeded acceptance criteria in the LCS. PCB 1016 was not detected in the samples.

LABORATORY REPORT

EAI ID#: **123046**

Client: **Sanborn, Head & Associates, Inc. (NH)**

Client Designation: **Broad St. RGP | 3474.00**

Sample ID: TP111A

Lab Sample ID: 123046.01

Matrix: aqueous

Date Sampled: 7/31/13

Date Received: 7/31/13

			Analysis			
		Units	Date	Time	Method	Analyst
Solids Suspended	**9000**	mg/L	8/01/13	9:05	2540D-97	SCW
Chloride	**1500**	mg/L	8/01/13	12:02	4500CIE	KD
Cyanide Total	< 0.01	mg/L	8/05/13	11:45	4500CNE	KD
Total Residual Chlorine	< 0.05	mg/L	7/31/13	16:50	4500CIG	NZ

QC REPORT

EAI ID#: **123046**

Client: **Sanborn, Head & Associates, Inc. (NH)**

Client Designation: **Broad St. RGP | 3474.00**

Parameter Name	Blank	LCS	LCSD	Units	Date of Analysis	Limits	RPD	Method
Solids Suspended	< 5	92 (99 %R)	N/A	mg/L	8/1/13	90 - 110		2540D-97
Chloride	< 1	25 (101 %R)	25 (101 %R) (0 RPD)	mg/L	8/1/13	90 - 110	20	4500CIE-90
Cyanide Total	< 0.01	0.23 (93 %R)	0.23 (93 %R) (0 RPD)	mg/L	8/5/13	85 - 115	20	4500CNE
Total Residual Chlorine	< 0.05	0.87 (98 %R)	0.87 (98 %R) (0 RPD)	mg/L	8/1/13	80 - 120	20	4500CIG-18

Samples were analyzed within holding times unless noted on the sample results page.
Instrumentation was calibrated in accordance with the method requirements.
The method blanks were free of contamination at the reporting limits.
The associated matrix spikes and/or Laboratory Control Samples met the above stated criteria.
Exceptions to the above statements are flagged or noted above or on the QC Narrative page.
*/! Flagged analyte recoveries deviated from the QA/QC limits.

LABORATORY REPORT

EAI ID#: **123046**

Client: **Sanborn, Head & Associates, Inc. (NH)**

Client Designation: **Broad St. RGP | 3474.00**

Sample ID: TP111A

Lab Sample ID: 123046.01
Matrix: aqueous
Date Sampled: 7/31/13
Date Received: 7/31/13

		Analytical Matrix	Units	Date of Analysis	Method	Analyst
Antimony	**0.002**	AqTot	mg/L	8/1/13	200.8	DS
Arsenic	**0.11**	AqTot	mg/L	8/1/13	200.8	DS
Cadmium	**0.002**	AqTot	mg/L	8/1/13	200.8	DS
Chromium	**0.084**	AqTot	mg/L	8/1/13	200.8	DS
Copper	**0.070**	AqTot	mg/L	8/1/13	200.8	DS
Iron	**61**	AqTot	mg/L	8/1/13	200.8	DS
Lead	**0.047**	AqTot	mg/L	8/1/13	200.8	DS
Nickel	**0.11**	AqTot	mg/L	8/1/13	200.8	DS
Selenium	**0.002**	AqTot	mg/L	8/1/13	200.8	DS
Silver	**0.016**	AqTot	mg/L	8/1/13	200.8	DS
Zinc	**0.14**	AqTot	mg/L	8/1/13	200.8	DS
Chromium (III)	**0.08**	AqTot	mg/L	8/1/13	200.8	DS
Chromium (VI)	< 0.01	AqTot	mg/L	7/31/13	7196A	DS

QC REPORT

EAI ID#: **123046**

Client: **Sanborn, Head & Associates, Inc. (NH)**

Client Designation: **Broad St. RGP | 3474.00**

Parameter Name	Blank	LCS	LCSD	Units	Date of Analysis	Limits	RPD	Method
Antimony	< 0.001	0.90 (90 %R)		mg/L	8/1/13	85 - 115	20	200.8
Arsenic	< 0.001	1.0 (100 %R)		mg/L	8/1/13	85 - 115	20	200.8
Cadmium	< 0.001	0.93 (93 %R)		mg/L	8/1/13	85 - 115	20	200.8
Chromium	< 0.001	0.92 (92 %R)		mg/L	8/1/13	85 - 115	20	200.8
Copper	< 0.001	0.86 (86 %R)		mg/L	8/1/13	85 - 115	20	200.8
Iron	< 0.05	10 (95 %R)		mg/L	8/1/13	85 - 115	20	200.8
Lead	< 0.001	0.93 (93 %R)		mg/L	8/1/13	85 - 115	20	200.8
Nickel	< 0.001	0.92 (92 %R)		mg/L	8/1/13	85 - 115	20	200.8
Selenium	< 0.001	1.1 (105 %R)		mg/L	8/1/13	85 - 115	20	200.8
Silver	< 0.001	0.098 (98 %R)		mg/L	8/1/13	85 - 115	20	200.8
Zinc	< 0.005	1.0 (102 %R)		mg/L	8/1/13	85 - 115	20	200.8
Chromium (VI)	< 0.01	0.26 (102 %R)		mg/L	7/31/13	95 - 105	20	7196A

Parameter Name	MS/MSD Parent ID	MS/MSD Parent	Matrix Spike	MSD	Units	Date of Analysis	Limits	RPD	Method
Antimony	123041.01	< 0.001	0.94 (94 %R)	0.93 (93 %R) (1 RPD)	mg/L	8/1/13	70-130	20	200.8
Arsenic	123041.01	< 0.001	1.0 (101 %R)	0.99 (99 %R) (2 RPD)	mg/L	8/1/13	70-130	20	200.8
Cadmium	123041.01	< 0.001	0.95 (95 %R)	0.93 (93 %R) (2 RPD)	mg/L	8/1/13	70-130	20	200.8
Chromium	123041.01	< 0.001	0.91 (91 %R)	0.89 (89 %R) (2 RPD)	mg/L	8/1/13	70-130	20	200.8
Copper	123041.01	0.007	0.85 (84 %R)	0.84 (83 %R) (1 RPD)	mg/L	8/1/13	70-130	20	200.8
Iron	123041.01	< 0.05	10 (94 %R)	10 (92 %R) (2 RPD)	mg/L	8/1/13	70-130	20	200.8
Lead	123041.01	< 0.001	0.96 (96 %R)	0.94 (94 %R) (2 RPD)	mg/L	8/1/13	70-130	20	200.8
Nickel	123041.01	< 0.001	0.89 (89 %R)	0.87 (87 %R) (2 RPD)	mg/L	8/1/13	70-130	20	200.8
Selenium	123041.01	< 0.001	1.1 (105 %R)	1.0 (104 %R) (1 RPD)	mg/L	8/1/13	70-130	20	200.8
Silver	123041.01	< 0.001	0.76 (76 %R)	0.77 (77 %R) (1 RPD)	mg/L	8/1/13	70-130	20	200.8
Zinc	123041.01	0.006	0.97 (97 %R)	0.96 (95 %R) (2 RPD)	mg/L	8/1/13	70-130	20	200.8
Chromium (VI)	123045.01	< 0.01	0.30 (101 %R)	0.31 (101 %R) (0 RPD)	mg/L	7/31/13	90-110	20	7196A

Samples were analyzed within holding times unless noted on the sample results page.
Instrumentation was calibrated in accordance with the method requirements.
The method blanks were free of contamination at the reporting limits.
The associated matrix spikes and/or Laboratory Control Samples met the above stated criteria.
Exceptions to the above statements are flagged or noted above or on the QC Narrative page.
*/! Flagged analyte recoveries deviated from the QA/QC limits.

PHOENIX
Environmental Laboratories, Inc.

Tuesday, August 06, 2013

Attn: Front Office
Eastern Analytical
25 Chenell Drive
Concord, NH 03301

Project ID: 123046
Sample ID#s: BF14654

This laboratory is in compliance with the NELAC requirements of procedures used except where indicated.

This report contains results for the parameters tested, under the sampling conditions described on the Chain Of Custody, as received by the laboratory.

A scanned version of the COC form accompanies the analytical report and is an exact duplicate of the original.

If you have any questions concerning this testing, please do not hesitate to contact Phoenix Client Services at ext. 200.

Sincerely yours,

Phyllis Shiller
Laboratory Director

NELAC - #NY11301
CT Lab Registration #PH-0618
MA Lab Registration #MA-CT-007
ME Lab Registration #CT-007
NH Lab Registration #213693-A,B
NJ Lab Registration #CT-003
NY Lab Registration #11301
PA Lab Registration #68-03530
RI Lab Registration #63
VT Lab Registration #VT11301

587 East Middle Turnpike, P.O. Box 370, Manchester, CT 06040
Telephone (860) 645-1102 Fax (860) 645-0823

PHOENIX
Environmental Laboratories, Inc.
587 East Middle Turnpike, P.O.Box 370, Manchester, CT 06045
Tel. (860) 645-1102 Fax (860) 645-0823

ACCREDITED IN ACCORDANCE WITH nelac
NY # 11301

Analysis Report

August 06, 2013

FOR: Attn: Front Office
Eastern Analytical
25 Chenell Drive
Concord, NH 03301

Sample Information		Custody Information		Date	Time
Matrix:	WATER	Collected by:		07/31/13	12:00
Location Code:	EASTANAL	Received by:	SW	08/01/13	11:05
Rush Request:	Standard	Analyzed by:	see "By" below		
P.O.#:	40542				

Laboratory Data

SDG ID: GBF14654
Phoenix ID: BF14654

Project ID: 123046
Client ID: TP111A

Parameter	Result	RL/ PQL	Units	Date/Time	By	Reference
Mercury	< 0.0002	0.0002	mg/L	08/02/13	RS	SW7470/245.1
Mercury Digestion	Completed			08/02/13	H/H	SW7470/245.1

RL/PQL=Reporting/Practical Quantitation Level (Equivalent to NELAC LOQ, Limit of Quanitation) ND=Not Detected
BRL=Below Reporting Level

Comments:

If there are any questions regarding this data, please call Phoenix Client Services at extension 200.
This report must not be reproduced except in full as defined by the attached chain of custody.

Phyllis Shiller, Laboratory Director
August 06, 2013
Reviewed and Released by: Sarah Bell, Project Manager

PHOENIX

Environmental Laboratories, Inc.
587 East Middle Turnpike, P.O.Box 370, Manchester, CT 06045
Tel. (860) 645-1102 Fax (860) 645-0823

ACCREDITED IN ACCORDANCE WITH nelac
NY # 11301

QA/QC Report

August 06, 2013

QA/QC Data

SDG I.D.: GBF14654

Parameter	Blank	Sample Result	Dup Result	Dup RPD	LCS %	LCSD %	LCS RPD	MS %	MSD %	MS RPD	% Rec Limits	% RPD Limits	
QA/QC Batch 243685, QC Sample No: BF14614 (BF14654)													
Mercury - Water	BRL	<0.0002	<0.0002	NC	100	97.2	2.8	49.9	47.6	4.7	70 - 130	20	m
Comment:													
Additional Mercury criteria: LCS acceptance range for waters is 80-120% and for soils is 70-130%.													

m = This parameter is outside laboratory ms/msd specified recovery limits.

If there are any questions regarding this data, please call Phoenix Client Services at extension 200.

RPD - Relative Percent Difference
LCS - Laboratory Control Sample
LCSD - Laboratory Control Sample Duplicate
MS - Matrix Spike
MS Dup - Matrix Spike Duplicate
NC - No Criteria
Intf - Interference

Phyllis Shiller, Laboratory Director
August 06, 2013

Tuesday, August 06, 2013

Requested Criteria: None

State: NH

Sample Criteria Exceedences Report

GBF14654 - EASTANAL

SampNo	Acode	Phoenix Analyte	Criteria	Result	RL	Criteria	RL Criteria	Analysis Units

*** No Data to Display ***

Phoenix Laboratories does not assume responsibility for the data contained in this report. It is provided as an additional tool to identify requested criteria exceedences. All efforts are made to ensure the accuracy of the data (obtained from appropriate agencies). A lack of exceedence information does not necessarily suggest conformance to the criteria. It is ultimately the site professional's responsibility to determine appropriate compliance.

4 oz IP

CHAIN-OF-CUSTODY RECORD

eastern analytical
professional laboratory services

EAI SRB# **123046**

Sample ID	Date Sampled	Matrix	aParameters	Sample Notes
TP111A	7/31/2013 12:00	aqueous	Mercury Cold Vapor (Phoenix)	

14654

EAI SRB# **123046** Project State: NH

Project ID: 4156

Company Phoenix Environmental Labs
Address 587 East Middle Turnpike
Address Manchester , CT 06040
Account #
Phone # (860) 645-1102
Fax Number 860 645-0823

Results Needed by: Preferred date

QC Deliverables

☐ A ☐ A+ ☒ B ☐ B+ ☐ C ☐ P

Notes about project:

Email pdf of results and invoice to customerservice@eailabs.com.

Eastern Analytical Inc. PO Number: 40542

Please call prior to analyzing, if RUSH surcharges will be applied.

Samples Collected by:

Relinquished by	Date/Time	Received by
[illegible]	7/31/13 15:40	[illegible]
UPS	8/1/13 11:05	[illegible]

Relinquished by Date/Time Received by

Eastern Analytical, Inc. 25 Chenell Dr. Concord, NH 03301 Phone: (603)228-0525 1-800-287-0525 Fax: (603)228-4591

As a subcontract lab to EAI, you will defend, indemnify and hold Eastern Analytical, Inc., its officers, employees, and agents harmless from and against any and all liability, loss, expense or claims for injury or damages arising out of the performance against this chain of custody but only in proportion to and to the extent such liability, loss, expense, or claims for injury or damages are caused by or result from the negligent or intentional acts or omissions of you as a subcontract lab, your officers, agents or employees

Chain-of-Custody Record

F 123046

27

Sample ID	Sampling Date/Time *If Composite, Indicate Both Start & Finish Date/Time	Matrix (see below)	Grab/*Composite	VOCs 8260B	Low Level 1,4-Dioxane	Low Level EDB/DBCP	8270D ABNs	PCB 608	TPH 1664	TSS, Chloride	Total CN	T. Res. Chlorine	Total Metals	Cr VI	Total Hg by CVAA												# of Containers	NOTES MeOH Vial #
~~B804~~	~~7/31/13 - 1020~~	~~GW~~	~~G~~	~~X~~	~~X~~	~~X~~	~~X~~	~~X~~	~~X~~	~~X~~	~~X~~	~~X~~	~~X~~	~~X~~	~~X~~	113											16	
TP111A	7/31/13 - 1200	GW		X	X	X	X	X	X	X	X	X	X	X	X												16	
Trip Blank	7/16/13 - 0805	Aq		X																							2	
1,4-Dioxane Trip Blank	6/20/13 - 1410	Aq			X																						2	
Matrix: A-Air; S-Soil; GW-Ground Water; SW-Surface Water; DW-Drining Water; WW-Waste Water; AQ-Aqueous				H	Ice	NSO	Ice	Ice	S	Ice	Na	Ice	N	Ice	N													
Preservative: H-HCl; N-HNO3; S-H2SO4; Na-NaOH; M-MeOH; NSO-Na2S2O3																												

Analyses Requested

Project Manager: Kate Emma Schlosser and Scott Nerney
Company: Sanborn, Head & Associates, Inc.
Address: 20 Foundry Street
City: Concord State: NH Zip: 03301
Phone 603-229-1900 Ext.:
Fax: 603-229-1919
E-Mail: kdubois@sanbornhead.com
Site Name: Broad St. RGP
Project # 3474.00
State: NH

Regulatory Program: RGP
Quote #: PO#:

Date Needed: Standard TAT

QA/QC
Reporting Level
A [B] C
or
Presumptive Certainty

Reporting Options
Prelims: [Yes] or No
If Yes: Fax or [PDF]
Electonic Options
No Fax | E-Mail | PDF | Equis

Temp. 8 °C
Ice? (Yes) No

Sampler(s): J. Corsello

Relinquished By: [signature] Date: 7/31/13 Time: 1322 Received By: Norman Cain
Relinquished By: Norman Cain Date: 7/31/13 Time: 1515 Received By: [signature]
Relinquished By: Date: Time: Received By:
Relinquished By: Date: Time: Received By:

Metals: Lists Below **Samples Field Filtered:** NO

Sb, As, Cd, Cr III, Cr VI, Cu, Fe, Pb, Ni, Se, Ag, Zn by 6020; Hg by CVAA

Notes: (i.e., Special Detection Limits, Billing Info, If Different)

Please perform all analyses required under RGP Appendix III Category IIIA with required RLs.
Please report total dichlorobenzenes in addition to the full 8260B list.
Trip blank(s) prepared by EAI.

Site History:
Suspected Contamination:
Field Readings:

Eastern Analytical, Inc.
Professional laboratory & drilling services
25 Chenell Drive | Concord, NH 03301 | Tel: 603.228.0525 | 1.800.287.0525 | Fax: 603.228.4591 | E-Mail: customerservice@eailabs.com | www.eailabs.com

HTE NORTHEAST, INC.

ATTACHMENT C

DILUTION FACTOR CALCULATION

Purpose: Calculate the effluent limits for metal parameters required by thee remediation general Permit (RGP) under the National Pollutant Discharge Elimination System (NPDES) for discharges in New H (NPDES Permit NHG910000) for a discharge of construction dewatering effluent to the Nashua River generated during construction of the Nashua Canal Outfall near the western limit of Spine Road.

Given: The receiving reach is the Nashua River (Hydrologic Unit Code (HUC) 010700040402 near the eastern extent of Mine Falls Park.

The 7Q10 flow of the Nashua River is 46.3 cfs (provided by Jeff Andrews of NHDES on 2/16/2015).

The maximum flow rate of Discharge is assumed to be 20 gallons per minute (gpm).

Method: Adjust limits for metals by a dilution factor (DF) based on the 7Q10 flow of the receiving water. DF ranges are provided in Appendix IV of the RGP.

DF = [(Qd + Qs)/Qd] x 0.9

Where:

DF = Dilution Factor

Qd = Maximum flow rate of the discharge in cubic feet per second (cfs)
=20 gpm
=.0446 cfs

Qs = Receiving water 7Q10 flow, in cfs, where 7Q10 is the annual minimum flow for 7 consecutive days with a recurrence interval of 10 years
=46.3 cfs

0.9 = Allowance for reserving 10% of the assets in the receiving stream as per Chapter ENV-Wq 1700, Surface Water Quality Regulations

DF = [(.0446 + 46.3)/.0446] x 0.9 = 935

Results: For a DF of 935, the following chloride and total metals limitations (in ug/l) are specified in the table below.

Chloride & Total Recoverable Metals Limitations (ug/L)
at Selected Dilution Ranges & Technology-Based Ceiling Limitations

Parameter	Influent Concentration	Dilution Factor (DF)					
		1-5	>5-10	>10-50	>50-100	>100	Ceiling Value
Chloride	1,500,000	Monitor	Monitor	Monitor	Monitor	Monitor	Monitor
Antimony	2.1	5.6	30	60	141	141	141
Arsenic	110	10	50	100	500	540	540
Cadmium	2	0.8	4	8	16	32	260
Chromium III	80	27.7	138	277	1,385	1,710	1,710
Chromium VI	<10	11.4	57	115	570	1,140	1,710
Copper	70	2.9	14.5	29	142	285	2,070
Lead	47	0.5	2.5	5	27	55	430
Mercury	0.2	0.9	2.3	2.3	2.3	2.3	2.3
Nickel	110	16.1	80.5	161	807	1,614	2,380
Selenium	2	5	25	50	250	408	408
Silver	16	0.4	2	4	17	35	240
Zinc	170	37	185	370	1,480	1,480	1,480
Iron	61,000	1,000	5,000	5,000	5,000	5,000	5,000

Conclusion: Influent metals concentrations are less than the recoverable metals limitations based on a Dilution factor of 935, except for Iron.

HTE NORTHEAST, INC.

ATTACHMENT D

ESA Eligibility Criteria

The ESA eligibility criteria are met through Criterion A: No endangered or threatened species or their designated critical habitats are likely to occur in proximity to the discharge or discharge related activities as demonstrated by:

The project will not discharge to an area listed in Section A of Appendix VII of the RGP.

The New Hampshire Heritage Bureau (NHHB) completed a review for Listed Endangered Species and Critical Habitat for the entire Broad Street Parkway project, of which the outfall structure is a part. Although NHHB found that certain species and habitat were located near the entire project area, the information provided by NHHB indicates that there are no endangered species or critical habitat at the discharge location. A copy of the NHHB's finding from the Construction Specification of the Broad Street Parkway - Parkway South is attached.

Memo

NH NATURAL HERITAGE BUREAU
NHB DATACHECK RESULTS LETTER

To: Jameson Paine, Normandeau Associates
30 International Drive
Suite 6
Portsmouth, NH 03801

From: Melissa Coppola, NH Natural Heritage Bureau
Date: 4/20/2012 (valid for one year from this date)
Re: Review by NH Natural Heritage Bureau
NHB File ID: NHB12-0865 Town: Nashua Location: Nashua Broad Street Parkway - new road between Broad Street and Nashua mill yard

Description: The City of Nashua proposes a new roadway and bridge between Broad Street and Nashua mill yard. Nashua River crossing is anticipated to involve new abutments and one pier in river.

cc: Kim Tuttle

As requested, I have searched our database for records of rare species and exemplary natural communities, with the following results.

Comments: Please coordinate with NHB for field surveys for the two state-listed plant species listed below. This review is not considered complete until the requested survey has occurred and follow-up recommendations to avoid or minimize impacts have been received.

Plant species	State[1]	Federal	Notes
clasping milkweed (*Asclepias amplexicaulis*)	T	--	This species grows in sandplains and disturbed openings, and is sensitive to disturbances that eliminate its habitat.
Wild Lupine (*Lupinus perennis*)	T	--	This wildflower grows in extremely dry, sandy openings and is easily identified in the field (see any wildflower guide) between early May and August. It is tolerant of surrounding disturbance and depends upon periodic mowing (or, historically, wildfire) to eliminate trees that would otherwise shade it out. It does not transplant well due to a tap root that can be more than three feet long.

Vertebrate species	State[1]	Federal	Notes
Banded Sunfish (*Enneacanthus obesus*)*	SC	--	Contact the NH Fish & Game Dept (see below).
Blanding's Turtle (*Emydoidea blandingii*)	E	--	Contact the NH Fish & Game Dept (see below).
Spotted Turtle (*Clemmys guttata*)	T	--	Contact the NH Fish & Game Dept (see below).
Wood Turtle (*Glyptemys insculpta*)	SC	--	Contact the NH Fish & Game Dept (see below).

Memo

NH NATURAL HERITAGE BUREAU
NHB DATACHECK RESULTS LETTER

[1]Codes: "E" = Endangered, "T" = Threatened, "--" = an exemplary natural community, or a rare species tracked by NH Natural Heritage that has not yet been added to the official state list. An asterisk (*) indicates that the most recent report for that occurrence was more than 20 years ago.

Contact for all animal reviews: Kim Tuttle, NH F&G, (603) 271-6544.

A negative result (no record in our database) does not mean that a sensitive species is not present. Our data can only tell you of known occurrences, based on information gathered by qualified biologists and reported to our office. However, many areas have never been surveyed, or have only been surveyed for certain species. An on-site survey would provide better information on what species and communities are indeed present.

Department of Resources and Economic Development
Division of Forests and Lands
(271-2214 fax: 271-6488

DRED/NHB
PO Box 1856
Concord NH 0330' 56
363

NHB12-0865

NH NATURAL HERITAGE BUREAU

Known locations of rare species and exemplary natural communities

Note: Mapped locations are not always exact. Occurrences that are not in the vicinity of the project are not shown.

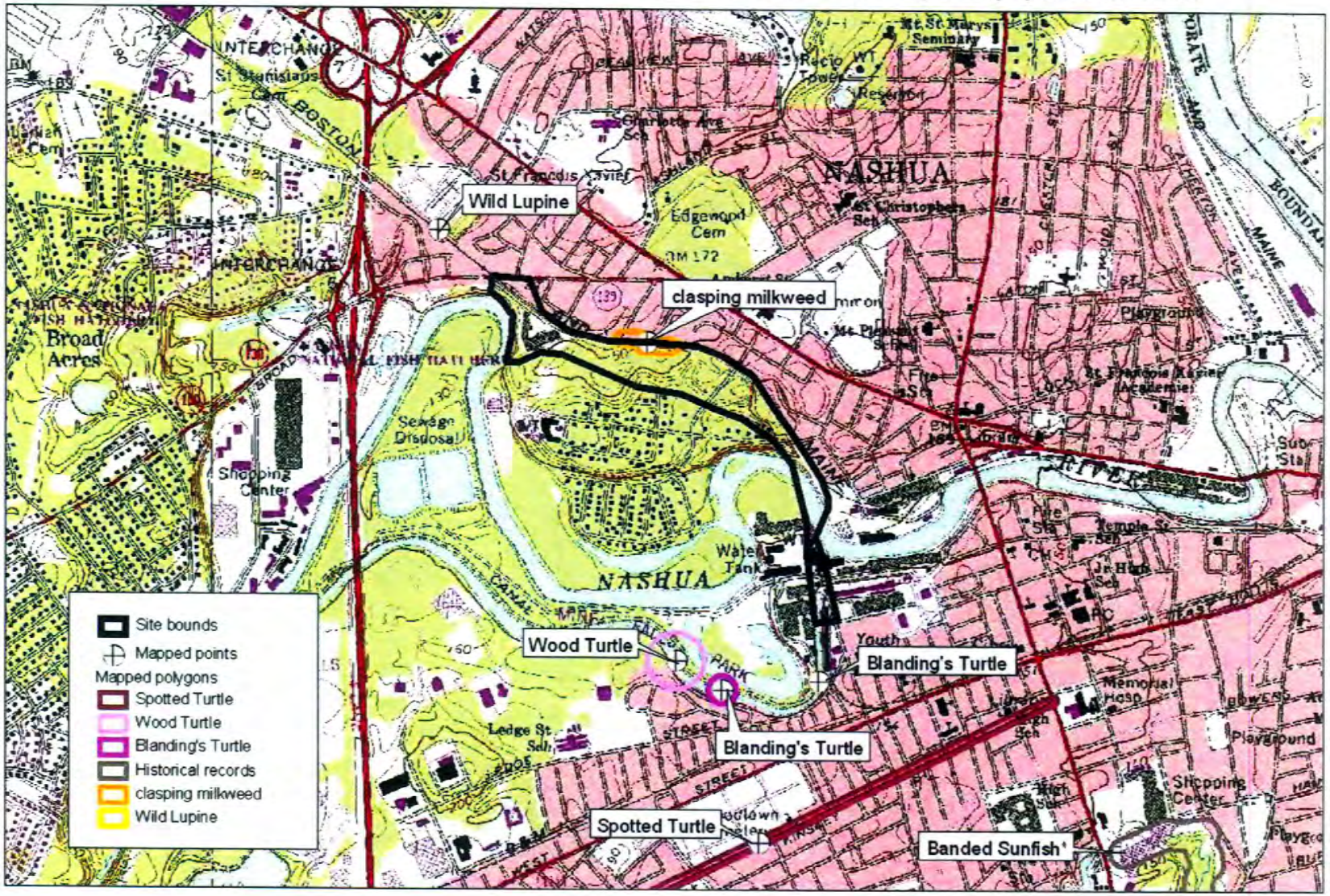

*Historical record

1:19464

Valid for one year from this date: 20 Apr 2012

New Hampshire Natural Heritage Bureau - Plant Record

clasping milkweed (*Asclepias amplexicaulis*)

Legal Status		Conservation Status	
Federal:	Not listed	Global:	Demonstrably widespread, abundant, and secure
State:	Listed Threatened	State:	Imperiled due to rarity or vulnerability

Description at this Location

Conservation Rank: Fair quality, condition and/or landscape context ('C' on a scale of A-D).

Comments on Rank: 2009: Declining due to persistent disturbance.

Detailed Description: 2009: 9 stems in bud, normal vigor, majority on south side. Previous year (2008) many more plants on north side of tracks.2006: 59 scattered stems, 2% in bud and 5% in flower. Plants seem healthy, with many different stages of maturity.

General Area: 2009: ***pitch pine - scrub oak woodland***. Dominant/characteristic species are *Quercus ilicifolia* (scrub oak), *Schizachyrium scoparium* (little bluestem), grasses, and sedges. Associated plants in addition to the dominants include *Pinus rigida* (pitch pine), *Ionactis linariifolius* (stiff-leaved aster), *Vaccinium angustifolium* (lowbush blueberry), and *Helianthemum canadense* (Canadian frostweed). No invasive species noted. A large tract of land on the [south] side of the tracks has not been developed due to the old Mohawk tannery and asbestos pollution.2006: Sides and vicinity of active railroad tracks. Dominant species are *Quercus* sp. (oak) and *Pinus* sp. (pine). Associated plants include common *Asclepias* sp. (milkweed). Along old tannery dumping and Fimbel Door dumping.

General Comments: 2009: North side plants weakened; south plants in very good condition in bud and well-established.

Management Comments: 2009: Heavily disturbed by dumping of yard and construction waste on north side, behind condos. South side less disturbed, but on/near old Mohawk tannery property with asbestos pollution. Notify condo association that dumping taking place in back of condos is not acceptable. Suggest fencing off the condo area from the railroad tracks; nearby homes have fencing separating yards from tracks.

Location

Survey Site Name: Boston & Maine RR, Bennett St.

Managed By:

County:	Hillsborough	USGS quad(s):	Nashua North (4207174)
Town(s):	Nashua	Lat, Long:	424604N, 0712851W
Size:	2.8 acres	Elevation:	

Precision: Within (but not necessarily restricted to) the area indicated on the map.

Directions: 2009: From eastbound on Rte. 130 (Broad Street), at the intersection with Rte. 101A (Amherst St.), turn right onto Bennett St. Proceed to the end of the street and park at the back of the condominium complex parking lot. There is a small path from the parking lot onto the railroad tracks.2006: From Rte. 130 (Broad St.) turn onto Fox St. and park behind buildings. Requires slight bushwhacking down to railroad tracks.

Dates documented

First reported:	2006-06-26	Last reported:	2009-06-17

Pinet, Barbara. 2009. Field survey to Broad Street on June 17.

New Hampshire Natural Heritage Bureau - Plant Record

Wild Lupine (*Lupinus perennis*)

Legal Status		Conservation Status	
Federal:	Not listed	Global:	Demonstrably widespread, abundant, and secure
State:	Listed Threatened	State:	Imperiled due to rarity or vulnerability

Description at this Location

Conservation Rank: Poor quality, condition and/or landscape context ('D' on a scale of A-D).
Comments on Rank: Single non-flowering plant.

Detailed Description: 2010: 1 vegetative plant, vigor feeble.2009: 1 vegetative plant.2006: 2 plants, one in flower.
General Area: 2010: Similar habitat description.2009: Slope above railroad tracks. Dominant species are *Pinus strobus* (white pine), *Pinus rigida* (pitch pine), and *Quercus ilicifolia* (scrub oak). Other associated species are *Vaccinium angustifolium* (lowbush blueberry) and *Comptonia peregrina* (sweet fern). Some yard waste and trash dumping in the vicinity from houses upslope.2006:Associated species include: lowbush blueberry (*Vaccinium angustifolium*), scrub oak (Quercus ilicifolia) and sweet fern (Comptonia peregrina).
General Comments:
Management Comments: 2009: Far enough from railroad tracks that it should not be affected by train travel or foot traffic on the tracks.

Location

Survey Site Name: Short Ave
Managed By:

County:	Hillsborough	USGS quad(s):	Nashua North (4207174)
Town(s):	Nashua	Lat, Long:	424617N, 0712923W
Size:	.4 acres	Elevation:	

Precision: Within (but not necessarily restricted to) the area indicated on the map.

Directions: 2010, 2009: From Broad Street heading east turn left onto Blue Hill Avenue/Pine Hill Rd. At a sharp curve in the road park at a dirt parking area next to the railroad tracks. Go to the train tracks and head SE toward Broad St. Go about 193 railroad ties and the plant is on the east side of the tracks just below the end of the cemetery fence, which runs along the top of the slope (42.771333N, 71.489683W).

Dates documented

First reported: 2006-06-26 Last reported: 2010-06-14

Pinet, Barbara and Spencer Brookes. 2010. Field survey to Short Ave on June 14.

New Hampshire Natural Heritage Bureau - Animal Record

Banded Sunfish (*Enneacanthus obesus*)

Legal Status

Federal: Not listed
State: SC

Conservation Status

Global: Demonstrably widespread, abundant, and secure
State: Rare or uncommon

Description at this Location

Conservation Rank: Historical records only - current condition unknown.
Comments on Rank:

Detailed Description: 1938: Merrimack River: Specimen collected.
General Area: 1938: Merrimack River: Water brown, murky. Shore wooded and open.
General Comments:
Management Comments:

Location

Survey Site Name: Merrimack River
Managed By: Joyce Park and Wildlife Sanctuary

County: Hillsborough
Town(s): Nashua
Size: 159.1 acres

USGS quad(s): Nashua North (4207174)
Lat, Long: 424457N, 0712655W
Elevation: 95 feet

Precision: Within 1.5 miles of the area indicated on the map (location information is vague or uncertain).

Directions: 1938: Merrimack River: In the mouth of Salmon Brook. Merrimack River watershed, 1 mile southeast of Nashua.

Dates documented

First reported: 1938
Last reported: 1938

Bailey, R. M. 1938. New Hampshire Fish and Game. Field Notes, Coll. Blanks Corr. to STA. M-107, M1 to STA. M11-10, M160. Field data files.

The New Hampshire Fish & Game Department has jurisdiction over rare wildlife in New Hampshire. Please contact them at 11 Hazen Drive, Concord, NH 03301 or at (603) 271-2461.

New Hampshire Natural Heritage Bureau - Animal Record

Blanding's Turtle (*Emydoidea blandingii*)

Legal Status

Federal: Not listed
State: Listed Endangered

Conservation Status

Global: Apparently secure but with cause for concern
State: Critically imperiled due to rarity or vulnerability

Description at this Location

Conservation Rank: Fair quality, condition and/or landscape context ('C' on a scale of A-D).
Comments on Rank:

Detailed Description: 2007: Area 11803: 1 adult observed, about 7" long.
General Area: 2007: Area 11803: Seen sunning itself above surface of water.
General Comments:
Management Comments:

Location

Survey Site Name: Nashua River
Managed By: Mine Falls Park

County: Hillsborough
Town(s): Nashua
Size: .4 acres

USGS quad(s): Nashua North (4207174)
Lat, Long:
Elevation:

Precision: Within (but not necessarily restricted to) the area indicated on the map.

Directions: 2007: Area 11803: Canal in Mine Falls Park east of Ledge St. School.

Dates documented

First reported: 2007-07-31
Last reported: 2007-07-31

The New Hampshire Fish & Game Department has jurisdiction over rare wildlife in New Hampshire. Please contact them at 11 Hazen Drive, Concord, NH 03301 or at (603) 271-2461.

New Hampshire Natural Heritage Bureau - Animal Record

Blanding's Turtle (*Emydoidea blandingii*)

Legal Status

Federal: Not listed
State: Listed Endangered

Conservation Status

Global: Apparently secure but with cause for concern
State: Critically imperiled due to rarity or vulnerability

Description at this Location

Conservation Rank: Not ranked
Comments on Rank:

Detailed Description: 2010: Area 12842: 1 adult observed, shell 7-8" long.
General Area: 2010: Area 12842: Stream.
General Comments:
Management Comments:

Location

Survey Site Name: Nashua River
Managed By: Mine Falls Park

County: Hillsborough
Town(s): Nashua
Size: 1.9 acres

USGS quad(s): Nashua North (4207174)
Lat, Long:
Elevation:

Precision: Within (but not necessarily restricted to) the area indicated on the map.

Directions: 2010: Area 12842: Mill Pond Canal, Mine Falls Park.

Dates documented

First reported: 2010-05-13
Last reported: 2010-05-13

The New Hampshire Fish & Game Department has jurisdiction over rare wildlife in New Hampshire. Please contact them at 11 Hazen Drive, Concord, NH 03301 or at (603) 271-2461.

New Hampshire Natural Heritage Bureau - Animal Record

Spotted Turtle (*Clemmys guttata*)

Legal Status

Federal: Not listed
State: Listed Threatened

Conservation Status

Global: Demonstrably widespread, abundant, and secure
State: Imperiled due to rarity or vulnerability

Description at this Location

Conservation Rank: Fair quality, condition and/or landscape context ('C' on a scale of A-D).
Comments on Rank:

Detailed Description: 1997: 1 adult found next to the road.
General Area:
General Comments: 1997: observed by Cheryl Walley
Management Comments:

Location

Survey Site Name: Kinsley Street
Managed By:

County: Hillsborough
Town(s): Nashua
Size: 19.1 acres

USGS quad(s): Nashua North (4207174)
Lat, Long:
Elevation: 190 feet

Precision: Within 1.5 miles of the area indicated on the map (location information is vague or uncertain).

Directions: Kinsley Street in Nashua.

Dates documented

First reported: 1997-07-11 Last reported: 1997-07-11

The New Hampshire Fish & Game Department has jurisdiction over rare wildlife in New Hampshire. Please contact them at 11 Hazen Drive, Concord, NH 03301 or at (603) 271-2461.

New Hampshire Natural Heritage Bureau - Animal Record

Wood Turtle (*Glyptemys insculpta*)

Legal Status

Federal: Not listed
State: SC

Conservation Status

Global: Apparently secure but with cause for concern
State: Rare or uncommon

Description at this Location

Conservation Rank: Fair quality, condition and/or landscape context ('C' on a scale of A-D).
Comments on Rank:

Detailed Description: 2007: Area 11802: 1 adult, about 8" long.
General Area: 2007: Area 11802: Seen swimming at surface of water.
General Comments:
Management Comments:

Location

Survey Site Name: Nashua River Canal
Managed By: Mine Falls Park

County: Hillsborough
Town(s): Nashua
Size: 7.7 acres

USGS quad(s): Nashua North (4207174)
Lat, Long:
Elevation:

Precision: Within (but not necessarily restricted to) the area indicated on the map.

Directions: 2007: Area 11802: Canal in Mine Falls Park east of Ledge St. School.

Dates documented

First reported: 2007-07-31 Last reported: 2007-07-31

The New Hampshire Fish & Game Department has jurisdiction over rare wildlife in New Hampshire. Please contact them at 11 Hazen Drive, Concord, NH 03301 or at (603) 271-2461.

From: Tuttle, Kim
To: Jameson Paine
Cc: Henderson, Carol
Subject: RE: NHB review: NHB12-0865/Nashua Broad Street Parkway
Date: Thursday, July 05, 2012 11:26:24 AM

Hello Jameson,

The NHFG Nongame and Endangered Species Program has reviewed NHB12-0865 for the proposed Nashua Broad Street Parkway. The NHB database check indicated the following species in the vicinity of the project:

Banded Sunfish (*Enneacanthus obesus*)* SC --

Blanding's Turtle (*Emydoidea blandingii*) E --

Spotted Turtle (*Clemmys guttata*) T --

Wood Turtle (*Glyptemys insculpta*) SC

As the project will require mitigation, we recommend that mitigation options or in lieu fee monies be directed toward the preservation of habitat for the state listed Blanding's and/or spotted turtle . Please feel free to call me if you have any further questions regarding this review.

Sincerely,

Kim Tuttle
Certified Wildlife Biologist
NH Fish and Game
Nongame and Endangered Species Program
603-271-6544

Did you know? There were once fewer than 50 moose in New Hampshire. Today, through the efforts of the New Hampshire Fish and Game Department, there are more than 4,500!

From: Jameson Paine [mailto:jpaine@normandeau.com]
Sent: Tuesday, July 03, 2012 2:40 PM
To: Tuttle, Kim
Cc: Adele Fiorillo
Subject: FW: NHB review: NHB12-0865/Nashua Broad Street Parkway

Hi Kim,
We are assisting the City of Nashua w/their Broad Street Parkway project to construct a new road from Broad Street in Nashua to the millyard, with a new bridge crossing over the Nashua River. The project was presented at the April natural resource agency meeting at NHDOT. I believe you just missed it at the time. I've checked my files and don't have a formal response from you. Could I please get your input on NHNHB's findings?

I've included my meeting minutes for your information/review. With the proposed activity, would you have any concerns with the NHNHB findings at the site for animals? It is anticipated that standard BMPs will be in place during construction.

Thanks,
Jamie

Jameson R. Paine
Principal Planner
Normandeau Associates, Inc.
30 International Drive, Suite 6
Portsmouth, NH 03801
www.Normandeau.com | JPaine@Normandeau.com
Office: 603.319.5300 | Direct: 603.319.5309 | Cell: 603.486.7060
NORMANDEAU ASSOCIATES
ENVIRONMENTAL CONSULTANTS

From: Melissa L. Coppola [mailto:Melissa.Coppola@dred.state.nh.us]
Sent: Friday, April 20, 2012 11:09 AM
To: Jameson Paine

Subject: NHB review: NHB12-0865

Attached, please find the review we have completed. If your review memo includes potential impacts to plants or natural communities please contact me for further information. If your project had potential impacts to wildlife, please contact NH Fish and Game at the phone number listed on the review.

Best,

Melissa

~~~~~~~~~~~~~~~~~~~~~~~~~~~~~~~~~~~~~~

Melissa Coppola

NH Natural Heritage Bureau

Environmental Information Specialist

Division of Forest & Lands- Natural Heritage Bureau

PO Box 1856

Concord, NH 03302-1856

603-271-2215 ext. 323

<www.nhnaturalheritage.org>

<<NHB12-0865_Paine.pdf>>

Please consider the environment before printing this e-mail.
~~~~~~~~~~~~~~~~~~~~~~~~~~~~~~~~~~~~~~

HTE NORTHEAST, INC.

ATTACHMENT E

Historic Eligibility Criteria

The NHPA eligibility criteria are met through Criterion 2: The project does not involve new construction and/or the demolition or the rehabilitation of existing structures or facilities and historic properties are not affected by the discharge or indentified in the path of the discharges regulated by this permit and are not identified where installation or construction of treatment systems or BMPs to control such discharges (e.g, diversion channels or retention ponds are planned.

Summary:

A. Properties listed or eligible for listing on the National Register of Historic Places are not located at the site of the canal outfall construction project, nor are the properties within the path of the discharge or discharge-related activities, including treatment systems or BMPs. HTE conducted a review of the National Register of Historic Places on February 16, 2015. The search returned 7 properties in Nashua, NH. A summary of properties on the National Register of Historic Places is below.

Site Name	Address	Listed Date
Abbot House	1 Abbott Sq.	4/17/1980
Hillsborough County Courthouse	19 Temple St.	6/6/1985
Hunt Memorial Library	6 Main St.	6/28/1971
Killicut--Way House	2 Old House Ln.	12/1/1989
Nashua Manufacturing Company Historic District	Factory and Pine Sts.	9/11/1987
Nashville Historic District	Roughly bounded by Nashua River, Merrimack River, and Rt. 3	12/13/1984
Stark, Gen. George, House	22 Concord St.	11/25/1980

B. The New Hampshire Department of Historic Resources (NHDHR) has reviewed the entire Broad Street parkway project as noted in a NEPA Environmental Re-evaluation of the Broad Street parkway NRBD-5315(21), 10040A, Nashua, New Hampshire, prepared for the Federal Highway Administration (FHWA) and the New Hampshire Department of transportation (NHDOT) by the Nashua Regional Planning Commission and Vanasse Hangen Brustlin, Inc. dated October 2010. Although historic properties are located within the limits of the parkway project, there are no historic properties that will be impacted by the current proposed discharge or discharge-related activities.

NORTHEAST, INC.

ATTACHMENT F

Best Management Practices Plan

Notice of Intent for the Remediation General Permit
Temporary Construction Dewatering for Site Redevelopment
Broad Street Parkway – South, Nashua Canal Outfall
Nashua, New Hampshire

This Best Management Practices Plan (BMPP) has been prepared in accordance with the requirements of the National Pollutant Discharge Elimination System (NPDES) Remediation General Permit (RGP) for New Hampshire (NHG910000). This BMPP is in support of an RGP application for dewatering during construction of the Broad Street Parkway South in Nashua, New Hampshire. The dewatering discharge will be to the Nashua River in Nashua, New Hampshire.

The following practices shall be adhered to during construction dewatering at the site.

Site Security
During construction activities, the dewatering system shall be secured using standard construction practices. The fractionalization tank and associated filters, pumps, and flow meters shall be located in a fenced area to limit access. All associated piping shall be secured and checked regularly. Any system failure, vandalism, or other incidents shall be addressed in a timely manner such that the discharge of materials from exceeding the limits of the RGP.

Minimizing Sediment in Influent
Crushed stone sumps constructed as far as possible from the active excavation area shall be used as the suction points for the dewatering system intakes. Efforts shall be made to manage the pumping such that the amount of sediment in the influent to the treatment system is minimized.

Management of Generated Wastes
The wastes that are anticipated to be generated during the operation of the dewatering treatment system include: sediment that accumulates in the fractionalization tank, used bag filters, spent activated carbon, and miscellaneous wastes associated with water quality sampling activities. The sediment shall be tested and disposed of at a licensed facility that is permitted to accept material with the documented physical and chemical characteristics of the sediment. The used bag filters and the miscellaneous sampling wastes shall be appropriately disposed of as solid or contaminated wastes, based on their characteristics. The spent activated carbon shall be processed and recycled/disposed by the company providing the fresh carbon.

Prohibition of Discharge Exceeding Design Flow
The subcontractor providing the treatment system shall provide the Operator with information on the design capacity of the treatment system and the features included in the design to monitor the flow rate to ensure that the capacity is not exceeded. The system shall be monitored with a continuous flow meter such that the overall system flow does not exceed the design capacity of an individual treatment system unit.

Preventative Maintenance Required
The treatment system will likely include two bag filter vessels (installed in parallel so the system does not need to be shut down for bag filter changeout), two activated carbon vessels in series. Sample ports will be available after the bag filters and after the carbon vessels. If sampling indicates that there is breakthrough in a carbon vessel, the system shall be shut down while the carbon is changed out.

The bag filters shall be replaced whenever the pressure drop across the filters exceeds the system's design criteria. The carbon vessels shall be backwashed with a clean water source when the pressure drop across the vessel exceeds the system's design criteria. The subcontractor shall be responsible for developing and implementing a preventative maintenance plan and schedule based on the specific design of the treatment system.

Employee Training
The field staff of the Operator and the subcontractor shall be instructed by the Operator regarding the water quality limits contained in the RGP and the critical need to operate the treatment system as designed. The staff shall also be provided guidance on how to reduce the sediment content that is pumped into the treatment system. Personnel who have responsibilities related to the dewatering efforts shall be informed of the contents of the RGP, this BMPP and the NOI.

Management of Run-on and Runoff
Water control BMPs shall be used as needed to construct a berm around the perimeter of the site to prevent rainfall from migrating off-site or into the excavation per the project SWPPP.

Erosion, Scouring and Sediment Control
Considering the design flow of the system and the planned duration of the discharge relative to the size and flow of the storm drain where it discharges to the Nashua River, it is not anticipated that the dewatering discharge will cause erosion, stream scouring at the discharge point, or additional sedimentation in the Nashua River.