UNITED STATES ENVIRONMENTAL PROTECTION AGENCY
Region 1
5 Post Office Square, Suite 100
BOSTON, MA 02109-3912

CERTIFIED MAIL

APR 12 2011

Chuck Castelluccio
Project Manager
ARCADIS U.S., Inc.
2 Executive Drive, Suite 303
Chelmsford, MA 01824

Re: Authorization to discharge under the Remediation General Permit (RGP) – MAG910000. Former Microsonics facility site located at 60 Winter Street, Weymouth, MA 02188-3305, Norfolk County; Authorization # MAG 910071 - Reissuance

Dear Mr. Castelluccio:

Based on the review of a Notice of Intent (NOI) submitted on behalf of Crane Corporation by your firm ARCADIS U.S., Inc., for the site referenced above, the U.S. Environmental Protection Agency (EPA) hereby authorizes you, as the named Operator, to discharge in accordance with the provisions of the RGP at that site. Your authorization number is listed above.

The checklist enclosed with this RGP authorization indicates the pollutants for which you are required to monitor. Also indicated on the checklist are the effluent limits, test methods and minimum levels (MLs) for each pollutant. Please note that the checklist does not represent the complete requirements of the RGP. Operators must comply with all of the applicable requirements of this permit, including influent and effluent monitoring, narrative water quality standards, record keeping, and reporting requirements, found in Parts I and II, and Appendices I – VIII of the RGP. See EPA's website for the complete RGP and other information at: http://www.epa.gov/region1/npdes/mass.html#dgp.

Please note the list of pollutants authorized includes pollutants found in excess of the RGP Appendix III limits, and others found in excess of the minimum levels (MLs) of detection. Please see Appendix VI for information on the MLs limits for each authorized pollutant.

Also, the list of pollutants attached to this authorization is subject to a recertification if operations at the site result in a discharge lasting longer than six months. A recertification can be submitted to EPA using a Notice of Change (NOC) within six (6) to twelve (12) months of operations in accordance with the 2010 RGP requirements, and at that time the permittee is authorized to request deletion of influent parameters not present during the last six months of operations.

This general permit and authorization to discharge will expire on September 9, 2015. You have reported that this project will terminate concurrently with the RGP on September 9, 2015. If for any reason the discharge terminates sooner you are required to submit a Notice of Termination (NOT) to the attention of the contact person indicated below within 30 days of project completion.

Thank you in advance for your cooperation in this matter. Please contact Victor Alvarez at 617-918-1572 or Alvarez.Victor@epa.gov, if you have any questions.

Sincerely,

David M. Webster, Chief
Industrial Permits Branch

Enclosure

cc: Kathleen Keohane, MassDEP

2010 Remediation General Permit
Summary of Monitoring Parameters[1]

NPDES Authorization Number:	**MAG910071 – Reissuance**
Date Authorization Issued:	March, 2011
Facility/Site Name:	Former Microsonics Facility
Facility/Site Address:	60 Winter Street, Weymouth, MA 02188-3305, Norfolk County
	Email address of owner:tpantealoni@craneco.com ; Phone n: 978-937-9999
Legal Name of Operator:	ARCADIS U.S., Inc.
Operator contact name, title, and Address:	Chuck Castelluccio, Project Manager,2 Executive Drive, Suite 303 Chelmsford, MA 01824
	Email ccastelluccio@arcadis-us.com
Estimated Date of Completion:	September 9, 2015
Category and Sub-Category:	Class II- Non Petroleum Site Remediation. Subcategory A. Volatile Organic Compounds Only sites
Receiving Water:	Mill River

Monitoring & Limits are applicable if checked. All samples are to be collected as grab samples

	Parameter	**Effluent Limit/Method#/ML** (All Effluent Limits are shown as Daily Maximum Limit, unless denoted by a **, in that case it will be a Monthly Average Limit)
	1. Total Suspended Solids (TSS)	30 milligrams/liter (mg/L) **, 50 mg/L for hydrostatic testing **, Me#60.2/ML 5ug/L
	2. Total Residual Chlorine (TRC) [1]	Freshwater = 11 ug/L ** Saltwater = 7.5 ug/L **/ Me#330.5/ML 20ug/L
	3. Total Petroleum Hydrocarbons (TPH)	5.0 mg/L/ Me# 1664A/ML 5.0mg/L
	4. Cyanide (CN) [2, 3]	Freshwater = 5.2 ug/l ** Saltwater = 1.0 ug/L **/ Me#335.4/ML 5ug/L
	5. Benzene (B)	5ug/L /50.0 ug/L for hydrostatic testing only/ Me#8260C/ML 2 ug/L
	6. Toluene (T)	(limited as ug/L total BTEX)/ Me#8260C/ ML 2ug/L
	7. Ethylbenzene (E)	(limited as ug/L total BTEX) Me#8260C/ ML 2ug/L
	8. (m,p,o) Xylenes (X)	(limited as ug/L total BTEX) Me#8260C/ ML 2ug/L
	9. Total Benzene, Toluene, Ethyl Benzene, and Xylenes (BTEX) [4]	100 ug/L/ Me#8260C/ ML 2ug/L
	10. Ethylene Dibromide (EDB) (1,2- Dibromoethane)	0.05 ug/l/ Me#8260C/ ML 10ug/L
	11. Methyl-tert-Butyl Ether	70.0 ug/l /Me#8260C/ ML 10ug/L

	Parameter	Effluent Limit/Method#/ML (All Effluent Limits are shown as Daily Maximum Limit, unless denoted by a **, in that case it will be a Monthly Average Limit)
	(MtBE)	
	12.tert-Butyl Alcohol (TBA) (TertiaryButanol)	Monitor Only (ug/L)/ Me#8260C/ ML 10ug/L
	13. tert-Amyl Methyl Ether (TAME)	Monitor Only (ug/L) /Me#8260C/ ML 10ug/L
	14. Naphthalene [5]	20 ug/L /Me#8260C/ ML 2ug/L
	15. Carbon Tetrachloride	4.4 ug/L /Me#8260C/ ML 5ug/L
	16. 1,2 Dichlorobenzene (o-DCB)	600 ug/L /Me#8260C/ ML 5ug/L
	17. 1,3 Dichlorobenzene (m-DCB)	320 ug/L /Me#8260C/ ML 5ug/L
	18. 1,4 Dichlorobenzene (p-DCB)	5.0 ug/L /Me#8260C/ ML 5ug/L
	18a. Total dichlorobenzene	763 ug/L - NH only /Me#8260C/ ML5ug/L
√	19. 1,1 Dichloroethane (DCA)	70 ug/L /Me#8260C/ ML 5ug/L
	20. 1,2 Dichloroethane (DCA)	5.0 ug/L /Me#8260C/ ML 5ug/L
√	21. 1,1 Dichloroethene (DCE)	3.2 ug/L/Me#8260C/ ML 5ug/L
√	22. cis-1,2 Dichloroethene (DCE)	70 ug/L/Me#8260C/ ML 5ug/L
√	23. Methylene Chloride	4.6 ug/L/Me#8260C/ ML 5ug/L
√	24. Tetrachloroethene (PCE)	5.0 ug/L/Me#8260C/ ML 5ug/L
√	25. 1,1,1 Trichloro-ethane (TCA)	200 ug/L/Me#8260C/ ML 5ug/L
	26. 1,1,2 Trichloro-ethane (TCA)	5.0 ug/L /Me#8260C/ ML 5ug/L
√	27. Trichloroethene (TCE)	5.0 ug/L /Me#8260C/ ML 5ug/L
√	28. Vinyl Chloride (Chloroethene)	2.0 ug/L /Me#8260C/ ML 5ug/L
	29. Acetone	Monitor Only(ug/L)/Me#8260C/ML 50ug/L
	30. 1,4 Dioxane	Monitor Only /Me#1624C/ML 50ug/L
	31. Total Phenols	300 ug/L Me#420.1&420.2/ML 2 ug/L/ Me# 420.4 /ML 50ug/L
√	32. Pentachlorophenol (PCP)	1.0 ug/L /Me#8270D/ML5ug/L,Me#604 &625/ML 10ug/L
	33. Total Phthalates (Phthalate esters) [6]	3.0 ug/L ** /Me#8270D/ML 5ug/L, Me#606/ML 10ug/L& Me#625/ML 5ug/L
	34. Bis (2-Ethylhexyl) Phthalate [Di- (ethylhexyl) Phthalate]	6.0 ug/L /Me#8270D/ML 5ug/L,Me#606/ML 10ug/L & Me#625/ML 5ug/L
√	35. Total Group I Polycyclic Aromatic Hydrocarbons (PAH)	10.0 ug/L
√	a. Benzo(a) Anthracene [7]	0.0038 ug/L /Me#8270D/ ML 5ug/L, Me#610/ML 5ug/L& Me#625/ML 5ug/L
√	b. Benzo(a) Pyrene [7]	0.0038 ug/L /Me#8270D/ ML 5ug/L, Me#610/ML 5ug/L& Me#625/ML 5ug/L
√	c. Benzo(b)Fluoranthene [7]	0.0038 ug/L /Me#8270D/ ML 5ug/L,

	Parameter	Effluent Limit/Method#/ML (All Effluent Limits are shown as Daily Maximum Limit, unless denoted by a **, in that case it will be a Monthly Average Limit)
		Me#610/ML 5ug/L& Me#625/ML 5ug/L
√	d. Benzo(k)Fluoranthene [7]	0.0038 ug/L /Me#8270D/ ML 5ug/L, Me#610/ML 5ug/L& Me#625/ML 5ug/L
√	e. Chrysene [7]	0.0038 ug/L /Me#8270D/ML 5ug/L, Me#610/ML 5ug/L& Me#625/ML 5ug/L
√	f. Dibenzo(a,h)anthracene [7]	0.0038 ug/L /Me#8270D/ML 5ug/L, Me#610/ML 5ug/L& Me#625/ML 5ug/L
√	g. Indeno(1,2,3-cd) Pyrene [7]	0.0038 ug/L /Me#8270D/ML 5ug/L, Me#610/ML 5ug/L& Me#625/ML5ug/L
	36. Total Group II Polycyclic Aromatic Hydrocarbons (PAH)	100 ug/L
√	h. Acenaphthene	X/Me#8270D/ML 5ug/L,Me#610/ML 5ug/L & Me#625/ML 5ug/L
√	i. Acenaphthylene	X/Me#8270D/ML 5ug/L,Me#610/ML 5ug/L & Me#625/ML 5ug/L
√	j. Anthracene	X/Me#8270D/ML 5ug/L,Me#610/ML 5ug/L & Me#625/ML 5ug/L
√	k. Benzo(ghi) Perylene	X/Me#8270D/ML 5ug/L,Me#610/ML 5ug/L & Me#625/ML 5ug/L
√	l. Fluoranthene	X/Me#8270D/ML 5ug/L,Me#610/ML 5ug/L & Me#625/ML 5ug/L
√	m. Fluorene	X/Me#8270D/ML 5ug/L,Me#610/ML 5ug/L & Me#625/ML 5ug/L
√	n. Naphthalene [5]	20 ug/l / Me#8270/ML 5ug/L, Me#610/ML 5ug/L & Me#625/ML 5ug/L
√	o. Phenanthrene	X/Me#8270D/ML 5ug/L,Me#610/ML 5ug/L & Me#625/ML 5ug/L
√	p. Pyrene	X/Me#8270D/ML5ug/L,Me#610/ML 5ug/L & Me#625/ML 5ug/L
	37. Total Polychlorinated Biphenyls (PCBs) [8, 9]	0.000064 ug/L/Me# 608/ ML 0.5 ug/L
√	38. Chloride	Monitor only/Me# 300.0/ ML 0.1ug/L

	Metal parameter	Total Recoverable Metal Limit @ H [10]= 50 mg/l CaCO3 for discharges in Massachusetts (ug/l) [11/12]		Minimum Level=ML	
		Freshwater			
	39. Antimony	5.6/ML 10			
	40. Arsenic **	10/ML 20			
	41. Cadmium **	0.2/ML10			
	42. Chromium III (trivalent) **	48.8/ML 15			
	43. Chromium VI (hexavalent)	11.4/ML 10			

	Metal parameter	Total Recoverable Metal Limit @ H [10]= 50 mg/l CaCO3 for discharges in Massachusetts (ug/l) 11/12		Minimum Level=ML	
		Freshwater			
	**				
	44. Copper **	5.2/ML 15			
	45. Lead **	1.3/ML 20			
	46. Mercury **	0.9/ML 0.2			
	47. Nickel **	29/ML 20			
	48. Selenium **	5/ML 20			
	49. Silver	1.2/ML 10			
	50. Zinc **	66.6/ML 15			
	51. Iron	1,000/ML 20			

	Other Parameters	Limit
√	52. Instantaneous Flow	Site specific in CFS
√	53. Total Flow	Site specific in CFS
√	54. pH Range for Class A & Class B Waters in MA	6.5-8.3; 1/Month/Grab[13]
	55. pH Range for Class SA & Class SB Waters in MA	6.5-8.3; 1/Month/Grab[13]
	56. pH Range for Class B Waters in NH	6.5-8; 1/Month/Grab[13]
	57. Daily maximum temperature - Warm water fisheries	83°F; 1/Month/Grab[14]
	58. Daily maximum temperature - Cold water fisheries	68°F; 1/Month/Grab[14]
	59. Maximum Change in Temperature in MA - Any Class A water body	1.5°F; 1/Month/Grab[14]
	60. Maximum Change in Temperature in MA - Any Class B water body- Warm Water	5°F; 1/Month/Grab[14]
	61. Maximum Change in Temperature in MA – Any Class B water body - Cold water and Lakes/Ponds	3°F; 1/Month/Grab[14]
	62. Maximum Change in Temperature in MA – Any Class SA water body - Coastal	1.5°F; 1/Month/Grab[14]
	63. Maximum Change in Temperature in MA – Any Class SB water body - July to September	1.5°F; 1/Month/Grab[14]
	64. Maximum Change in Temperature in MA – Any Class SB water body - October to June	4°F; 1/Month/Grab[14]

Footnotes:

[1] Although the maximum values for TRC are 11ug/l and 7.5 ug/l for freshwater, and saltwater respectively, the compliance limits are equal to the minimum level (ML) of the test method used as listed in Appendix VI (i.e., Method 330.5, 20 ug/l).

[2] Limits for cyanide are based on EPA's water quality criteria expressed as micrograms per liter. There is currently no EPA approved test method for free cyanide. Therefore, total cyanide must be reported.
[3] Although the maximum values for cyanide are 5.2 ug/l and 1.0 ug/l for freshwater and saltwater, respectively, the compliance limits are equal to the minimum level (ML) of the Method 335.4 as listed in Appendix VI (i.e., 10 ug/l).
[4] BTEX = sum of Benzene, Toluene, Ethylbenzene, and total Xylenes.
[5] Naphthalene can be reported as both a purgeable (VOC) and extractable (SVOC) organic compound. If both VOC and SVOC are analyzed, the highest value must be used unless the QC criteria for one of the analyses is not met. In such cases, the value from the analysis meeting the QC criteria must be used.
[6] The sum of individual phthalate compounds(not including the #34, Bis (2-Ethylhexyl) Phthalate . The compliance limits are equal to the minimum level (ML) of the test method used as listed in Appendix VI.
Total values calculated for reporting on NOIs and discharge monitoring reports shall be calculated by adding the measured concentration of each constituent. If the measurement of a constituent is less than the ML, the permittee shall use a value of zero for that constituent. For each test, the permittee shall also attach the raw data for each constituent to the discharge monitoring report, including the minimum level and minimum detection level for the analysis.
[7] Although the maximum value for the individual PAH compounds is 0.0038 ug/l, the compliance limits are equal to the minimum level (ML) of the test method used as listed in Appendix VI.
[8] In the November 2002 WQC, EPA has revised the definition of Total PCBs for aquatic life as total PCBs is the sum of all homologue, all isomer, all congener, or all "Oroclor analyses."Total values calculated for reporting on NOIs and discharge monitoring reports shall be calculated by adding the measured concentration of each constituent. If the measure of a constituent is less than the ML, the permittee shall use a value of zero for that constituent. For each test, the permittee shall also attach the raw data for each constituent to the discharge monitoring report, including the minimum level and minimum detection level for the analysis.
[9]Although the maximum value for total PCBs is 0.000064 ug/l, the compliance limit is equal to the minimum level (ML) of the test method used as listed in Appendix VI (i.e., 0.5 ug/l for Method 608 or 0.00005 ug/l when Method 1668a is approved).
[10] Hardness. Cadmium, Chromium III, Copper, Lead, Nickel, Silver, and Zinc are Hardness Dependent.
[11] For a Dilution Factor (DF) from 1 to 5, metals limits are calculated using DF times the base limit for the metal. See Appendix IV. For example, iron limits are calculated using DF x 1,000ug/L (the iron base limit). Therefore DF is 1.5, the iron limit will be 1,500 ug/L; DF 2, then iron limit =1,000 x 2 =2,000 ug/L., etc. not to exceed the DF=5.
[12] Minimum Level (ML) is the lowest level at which the analytical system gives a recognizable signal and acceptable calibration point for the analyte. The ML represents the lowest concentration at which an analyte can be measured with a known level of confidence. The ML is calculated by multiplying the laboratory-determined method detection limit by 3.18 (see 40 CFR Part 136, Appendix B).
[13] pH sampling for compliance with permit limits may be performed using field methods as provided for in EPA test Method 150.1.
[14] Temperature sampling per Method 170.1

ARCADIS
Infrastructure, environment, buildings

ARCADIS U.S., Inc.
2 Executive Drive
Suite 303
Chelmsford
Massachusetts 01824
Tel 978.937.9999
Fax 978.937.7555
www.arcadis-us.com

ENVIRONMENT

Submitted via Electronic Mail

US Environmental Protection Agency
5 Post Office Square, Suite 100
Mail Code OEP06-4
Boston, MA 02109-3912
ATTN: Remediation General Permit NOI Processing

Subject:
Notice of Intent – Remediation General Permit
Former Microsonics Facility
60 Winter Street
Weymouth, Massachusetts 02188

Date:
December 9, 2010

Contact:
Chuck Castelluccio

Phone:
978-937-9999 x316

Email:
CCastelluccio@arcadis-us.com

Our ref:
MA000690.0010.00005

Dear Sir/Madam:

ARCADIS U.S., Inc is submitting the enclosed Notice of Intent for continuation of coverage under the Remediation General Permit for the Former Microsonics Facility located at 60 Winter Street in Weymouth, Massachusetts. There is currently a groundwater extraction and treatment system on Site which discharges to the Mill River via a storm water drain/catch basin. The discharge is operated in accordance with 310 CMR 40.0000.

A paper copy of this Notice of Intent will also follow this electronic submittal.

Please feel free to contact us with any questions or concerns.

Sincerely,

ARCADIS U.S., Inc.

Chuck Castelluccio
Project Manager

Copies:
Town of Weymouth, Health Department via FedEx

B. Suggested Form for Notice of Intent (NOI) for the Remediation General Permit

1. General facility/site information. Please provide the following information about the site:

a) Name of **facility/site**: Former Microsonics Facility		**Facility/site** mailing address:			
Location of **facility/site**: longitude: 70 57' 15"W latitude: 42 12' 00"N	Facility SIC code(s): 5714, 5941	Street: 60 Winter Street			
b) Name of **facility/site owner:** Crane Co.		Town: Weymouth			
Email address of facility/site owner: tpantaleoni@craneco.com		State: MA	Zip: 02188-3305	County: Norfolk	
Telephone no. of facility/site **owner**: (203) 363-7214					
Fax no. of facility/site **owner**: (203) 363-7298		**Owner** is (check one): 1. Federal__○__ 2. State/Tribal__○__ 3. Private __⊙__ 4. Other __○__ if so, describe:			
Address of **owner** (if different from site):					
Street: 100 First Stamford Place					
Town: Stamford	State: CT	Zip: 06902-6740	County: Fairfield		
c) Legal name of **operator**: ARCADIS U.S., Inc.	**Operator** telephone no: (978) 937-9999				
	Operator fax no.: (978) 937-7555	**Operator** email: ccastelluccio@arcadis-us.com			
Operator contact name and title: Chuck Castelluccio, Project Manager (ARCADIS)					
Address of **operator** (if different from owner):	Street: 2 Executive Drive, Suite 303				
Town: Chelmsford	State: MA	Zip: 01824	County: Middlesex		

d) Check Y for "yes" or N for "no" for the following:
1. Has a prior NPDES permit exclusion been granted for the discharge? Y_____ N_____, if Y, number: MA03I-098
2. Has a prior NPDES application (Form 1 & 2C) ever been filed for the discharge?
Y_____ N_____, if Y, date and tracking #:
3. Is the discharge a "new discharge" as defined by 40 CFR 122.2? Y_____ N_____
4. For sites in Massachusetts, is the discharge covered under the Massachusetts Contingency Plan (MCP) and exempt from state permitting? Y_____ N_____

e) Is site/facility subject to any State permitting, license, or other action which is causing the generation of discharge? Y_____ N_____
If Y, please list:
1. site identification # assigned by the state of NH or MA:
2. permit or license # assigned:
3. state agency contact information: name, location, and telephone number:

f) Is the site/facility covered by any other EPA permit, including:
1. Multi-Sector General Permit? Y_____ N_____,
if Y, number:
2. Final Dewatering General Permit? Y_____ N_____,
if Y, number:
3. EPA Construction General Permit? Y_____ N_____,
if Y, number:
4. Individual NPDES permit? Y_____ N_____,
if Y, number:
5. any other water quality related individual or general permit? Y_____ N_____, if Y, number:

g) Is the site/facility located within or does it discharge to an Area of Critical Environmental Concern (ACEC)? Y_____ N_____

h) Based on the facility/site information and any historical sampling data, identify the sub-category into which the potential discharge falls.

Activity Category	**Activity Sub-Category**
I - Petroleum Related Site Remediation	A. Gasoline Only Sites _____ B. Fuel Oils and Other Oil Sites (including Residential Non-Business Remediation Discharges) _____ C. Petroleum Sites with Additional Contamination _____
II - Non Petroleum Site Remediation	A. Volatile Organic Compound (VOC) Only Sites _____ B. VOC Sites with Additional Contamination _____ C. Primarily Heavy Metal Sites _____
III - Contaminated Construction Dewatering	A. General Urban Fill Sites _____ B. Known Contaminated Sites _____

IV - Miscellaneous Related Discharges	A. Aquifer Pump Testing to Evaluate Formerly Contaminated Sites ☐ B. Well Development/Rehabilitation at Contaminated/Formerly Contaminated Sites ☐ C. Hydrostatic Testing of Pipelines and Tanks ☐ D. Long-Term Remediation of Contaminated Sumps and Dikes ☐ E. Short-term Contaminated Dredging Drain Back Waters (if not covered by 401/404 permit) ☐

2. Discharge information. Please provide information about the discharge, (attaching additional sheets as necessary) including:

a) Describe the discharge activities for which the owner/applicant is seeking coverage:

Groundwater is extracted from Site recovery wells and is treated through a groundwater remediation system for VOC removal. Treated water is then discharged to surface water via a storm water drain on Site.

b) Provide the following information about each discharge:

1) Number of discharge points: 1

2) What is the **maximum** and **average flow rate** of discharge (in cubic feet per second, ft^3/s)?
Max. flow 0.045 cfs Is maximum flow a **design value**? Y ◉ N ○
Average flow (include units) 0.011 cfs Is average flow a design value or estimate? estimate

3) Latitude and longitude of each discharge within 100 feet:

pt.1: lat 42 12' 58.8"N	long 70 57' 5.0"W	pt.2: lat.	long. ;
pt.3: lat	long	pt.4: lat.	long. ;
pt.5: lat	long	pt.6: lat.	long. ;
pt.7: lat	long	pt.8: lat.	long. ; etc.

4) If hydrostatic testing, total volume of the discharge (gals):

5) Is the discharge intermittent ○ or seasonal ○ ?
Is discharge ongoing? Y ◉ N ○

c) Expected dates of discharge (mm/dd/yy): start 9/9/2010 end 9/9/2015

d) Please attach a line drawing or flow schematic showing water flow through the facility including:
1. sources of intake water, 2. contributing flow from the operation, 3. treatment units, and 4. discharge points and receiving waters(s). see attached P&ID

3. Contaminant information.

a) Based on the sub-category selected (see Appendix III), indicate whether each listed chemical is **believed present** or **believed absent** in the potential discharge. Attach additional sheets as needed. see attached for data

Parameter *	CAS Number	Believed Absent	Believed Present	# of Samples	Sample Type (e.g., grab)	Analytical Method Used (method #)	Minimum Level (ML) of Test Method	Maximum daily value		Average daily value	
								concentration (ug/l)	mass (kg)	concentration (ug/l)	mass (kg)
1. Total Suspended Solids (TSS)		☐	☐								
2. Total Residual Chlorine (TRC)		☐	☐								
3. Total Petroleum Hydrocarbons (TPH)		☐	☐								
4. Cyanide (CN)	57125	☐	☐								
5. Benzene (B)	71432	☐	☐								
6. Toluene (T)	108883	☐	☐								
7. Ethylbenzene (E)	100414	☐	☐								
8. (m,p,o) Xylenes (X)	108883; 106423; 95476; 1330207	☐	☐								
9. Total BTEX [2]	n/a	☐	☐								
10. Ethylene Dibromide (EDB) (1,2-Dibromoethane) [3]	106934	☐	☐								
11. Methyl-tert-Butyl Ether (MtBE)	1634044	☐	☐								
12. tert-Butyl Alcohol (TBA) (Tertiary-Butanol)	75650	☐	☐								

***** Numbering system is provided to allow cross-referencing to Effluent Limits and Monitoring Requirements by Sub-Category included in Appendix III, as well as the Test Methods and Minimum Levels associated with each parameter provided in Appendix VI.

[2] BTEX = Sum of Benzene, Toluene, Ethylbenzene, total Xylenes.

[3] EDB is a groundwater contaminant at fuel spill and pesticide application sites in New England.

Parameter *	CAS Number	Believed Absent	Believed Present	# of Samples	Sample Type (e.g., grab)	Analytical Method Used (method #)	Minimum Level (ML) of Test Method	Maximum daily value		Average daily value	
								concentration (ug/l)	mass (kg)	concentration (ug/l)	mass (kg)
13. tert-Amyl Methyl Ether (TAME)	9940508	☐	☐								
14. Naphthalene	91203	☐	☐								
15. Carbon Tetrachloride	56235	☐	☐								
16. 1,2 Dichlorobenzene (o-DCB)	95501	☐	☐								
17. 1,3 Dichlorobenzene (m-DCB)	541731	☐	☐								
18. 1,4 Dichlorobenzene (p-DCB)	106467	☐	☐								
18a. Total dichlorobenzene		☐	☐								
19. 1,1 Dichloroethane (DCA)	75343	☐	☐								
20. 1,2 Dichloroethane (DCA)	107062	☐	☐								
21. 1,1 Dichloroethene (DCE)	75354	☐	☐								
22. cis-1,2 Dichloroethene (DCE)	156592	☐	☐								
23. Methylene Chloride	75092	☐	☐								
24. Tetrachloroethene (PCE)	127184	☐	☐								
25. 1,1,1 Trichloro-ethane (TCA)	71556	☐	☐								
26. 1,1,2 Trichloro-ethane (TCA)	79005	☐	☐								
27. Trichloroethene (TCE)	79016	☐	☐								

Parameter *	CAS Number	Believed Absent	Believed Present	# of Samples	Sample Type (e.g., grab)	Analytical Method Used (method #)	Minimum Level (ML) of Test Method	Maximum daily value		Average daily value	
								concentration (ug/l)	mass (kg)	concentration (ug/l)	mass (kg)
28. Vinyl Chloride (Chloroethene)	75014	☐	☐								
29. Acetone	67641	☐	☐								
30. 1,4 Dioxane	123911	☐	☐								
31. Total Phenols	108952	☐	☐								
32. Pentachlorophenol (PCP)	87865	☐	☐								
33. Total Phthalates (Phthalate esters) [4]		☐	☐								
34. Bis (2-Ethylhexyl) Phthalate [Di-(ethylhexyl) Phthalate]	117817	☐	☐								
35. Total Group I Polycyclic Aromatic Hydrocarbons (PAH)		☐	☐								
a. Benzo(a) Anthracene	56553	☐	☐								
b. Benzo(a) Pyrene	50328	☐	☐								
c. Benzo(b)Fluoranthene	205992	☐	☐								
d. Benzo(k)Fluoranthene	207089	☐	☐								
e. Chrysene	21801	☐	☐								
f. Dibenzo(a,h)anthracene	53703	☐	☐								
g. Indeno(1,2,3-cd) Pyrene	193395	☐	☐								
36. Total Group II Polycyclic Aromatic Hydrocarbons (PAH)		☐	☐								

[4] The sum of individual phthalate compounds.

Parameter *	CAS Number	Believed Absent	Believed Present	# of Samples	Sample Type (e.g., grab)	Analytical Method Used (method #)	Minimum Level (ML) of Test Method	Maximum daily value		Average daily value	
								concentration (ug/l)	mass (kg)	concentration (ug/l)	mass (kg)
h. Acenaphthene	83329	☐	☐								
i. Acenaphthylene	208968	☐	☐								
j. Anthracene	120127	☐	☐								
k. Benzo(ghi) Perylene	191242	☐	☐								
l. Fluoranthene	206440	☐	☐								
m. Fluorene	86737	☐	☐								
n. Naphthalene	91203	☐	☐								
o. Phenanthrene	85018	☐	☐								
p. Pyrene	129000	☐	☐								
37. Total Polychlorinated Biphenyls (PCBs)	85687; 84742; 117840; 84662; 131113; 117817.	☐	☐								
38. Chloride	16887006	☐	☐								
39. Antimony	7440360	☐	☐								
40. Arsenic	7440382	☐	☐								
41. Cadmium	7440439	☐	☐								
42. Chromium III (trivalent)	16065831	☐	☐								
43. Chromium VI (hexavalent)	18540299	☐	☐								
44. Copper	7440508	☐	☐								
45. Lead	7439921	☐	☐								
46. Mercury	7439976	☐	☐								
47. Nickel	7440020	☐	☐								
48. Selenium	7782492	☐	☐								
49. Silver	7440224	☐	☐								
50. Zinc	7440666	☐	☐								
51. Iron	7439896	☐	☐								
Other (describe):		☐	☐								

Parameter *	CAS Number	Believed Absent	Believed Present	# of Samples	Sample Type (e.g., grab)	Analytical Method Used (method #)	Minimum Level (ML) of Test Method	Maximum daily value		Average daily value	
								concentration (ug/l)	mass (kg)	concentration (ug/l)	mass (kg)
		☐	☐								
		☐	☐								

b) For discharges where **metals** are believed present, please fill out the following (attach results of any calculations):

Step 1: Do any of the metals in the influent exceed the effluent limits in Appendix III (i.e., the limits set at zero dilution)? Y__ N__	If yes, which metals?
Step 2: For any metals which exceed the **Appendix III** limits, calculate the **dilution factor (DF)** using the formula in Part I.A.3.c (step 2) of the NOI instructions or as determined by the State prior to the submission of this NOI. What is the dilution factor for applicable metals? Metal: DF: Metal: DF: Metal: DF: Metal: DF: Etc.	Look up the limit calculated at the corresponding dilution factor in **Appendix IV.** Do any of the metals in the **influent** have the potential to exceed the corresponding **effluent** limits in Appendix IV (i.e., is the influent concentration above the limit set at the calculated dilution factor)? Y__ N__ If Y, list which metals:

4. Treatment system information. Please describe the treatment system using separate sheets as necessary, including:

a) A description of the treatment system, including a schematic of the proposed or existing treatment system:

For this treatment system, groundwater is extracted from up to 5 groundwater recovery wells, conveyed through cartridge filters and liquid phase granular activated carbon for VOC removal, pH adjusted (where air is blown through a tank to remove carbon dioxide such that the pH rises to a level that is within the discharge limits), and then discharged to a storm drain that runs into the Mill River.

b) Identify each applicable treatment unit (check all that apply):	Frac. tank ☐	Air stripper ☐	Oil/water separator ☐	Equalization tanks ☐	Bag filter ☐	GAC filter ☒
	Chlorination ☐	De-chlorination ☐	Other (please describe):	cartridge filter and pH adjustment tank (without amendments)		

c) Proposed **average** and **maximum flow rates** (gallons per minute) for the discharge and the **design flow rate**(s) (gallons per minute) of the treatment system:
Average flow rate of discharge 5 gpm Maximum flow rate of treatment system 20 gpm
Design flow rate of treatment system 20 gpm

d) A description of chemical additives being used or planned to be used (attach MSDS sheets):

No chemicals are added to the treatment process or are planned to be used.

5. Receiving surface water(s). Please provide information about the receiving water(s), using separate sheets as necessary:

a) Identify the discharge pathway:	Direct to receiving water_☐__	Within facility (sewer) _☐__	Storm drain_☒__	Wetlands ☐	Other (describe):

b) Provide a narrative description of the discharge pathway, including the name(s) of the receiving waters:
Treated water is discharged to a storm drain/catch basin just off Site (on Winter Street). Water from this point is conveyed to the Mill River.

c) Attach a detailed map(s) indicating the site location and location of the outfall to the receiving water:
1. For multiple discharges, number the discharges sequentially.
2. For indirect dischargers, indicate the location of the discharge to the indirect conveyance and the discharge to surface water
The map should also include the location and distance to the nearest sanitary sewer as well as the locus of nearby sensitive receptors (based on USGS topographical mapping), such as surface waters, drinking water supplies, and wetland areas.

d) Provide the state water quality classification of the receiving water A

e) Provide the reported or calculated seven day-ten year low flow (7Q10) of the receiving water 0.12 cfs
Please attach any calculation sheets used to support stream flow and dilution calculations. see attached stream flow statistics page

f) Is the receiving water a listed 303(d) water quality impaired or limited water? Y_◉__ N_○__ If yes, for which pollutant(s)?
noxious aquatic plants, nutrients, pathogens

Is there a final TMDL? Y_○__ N_◉__ If yes, for which pollutant(s)?

6. ESA and NHPA Eligibility.

Please provide the following information according to requirements of Permit Parts I.A.4 and I.A.5 Appendices II and VII.

a) Using the instructions in Appendix VII and information on Appendix II, under which criterion listed in Part I.C are you eligible for coverage under this general permit?

A ___ B ___ C ___ D ___ E ___ F ___ see attached map from Bureau of Waste Site Cleanup

b) If you selected Criterion D or F, has consultation with the federal services been completed? Y___ N___ Underway___

c) If consultation with U.S. Fish and Wildlife Service and/or NOAA Fisheries Service was completed, was a written concurrence finding that the discharge is "not likely to adversely affect" listed species or critical habitat received? Y___ N___

d) Attach documentation of ESA eligibility as described in the NOI instructions and required by Appendix VII, Part I.C, Step 4.

e) Using the instructions in Appendix VII, under which criterion listed in Part II.C are you eligible for coverage under this general permit?

1 ___ 2 ___ 3 ___

f) If Criterion 3 was selected, attach all written correspondence with the State or Tribal historic preservation officers, including any terms and conditions that outline measures the applicant must follow to mitigate or prevent adverse effects due to activities regulated by the RGP.

7. Supplemental information.

Please provide any supplemental information. Attach any analytical data used to support the application. Attach any certification(s) required by the general permit.

All referenced attachments above and laboratory data packages for RGP sampling and system sampling conducted in November 2010 follow this application as attachments.

8. Signature Requirements: The Notice of Intent must be signed by the operator in accordance with the signatory requirements of 40 CFR Section 122.22, including the following certification:

I certify under penalty of law that this document and all attachments were prepared under my direction or supervision in accordance with a system designed to assure that qualified personnel properly gather and evaluate the information submitted. Based on my inquiry of the person or persons who manage the system, or those persons directly responsible for gathering the information, I certify that the information submitted is, to the best of my knowledge and belief, true, accurate, and complete. I certify that I am aware that there are significant penalties for submitting false information, including the possibility of fine and imprisonment for knowing violations.

Facility/Site Name:	Former Microsonics Facility
Operator signature:	
Printed Name &Title:	Chuck Castelluccio, Project Manager
Date:	December 8, 2010

Section 2 (d), 4(a)

Figure 1 – Piping and Instrumentation Diagram

BTHERRIAULT, 07/21/2005, 15:18:06 | FILE: CR-001.DWG

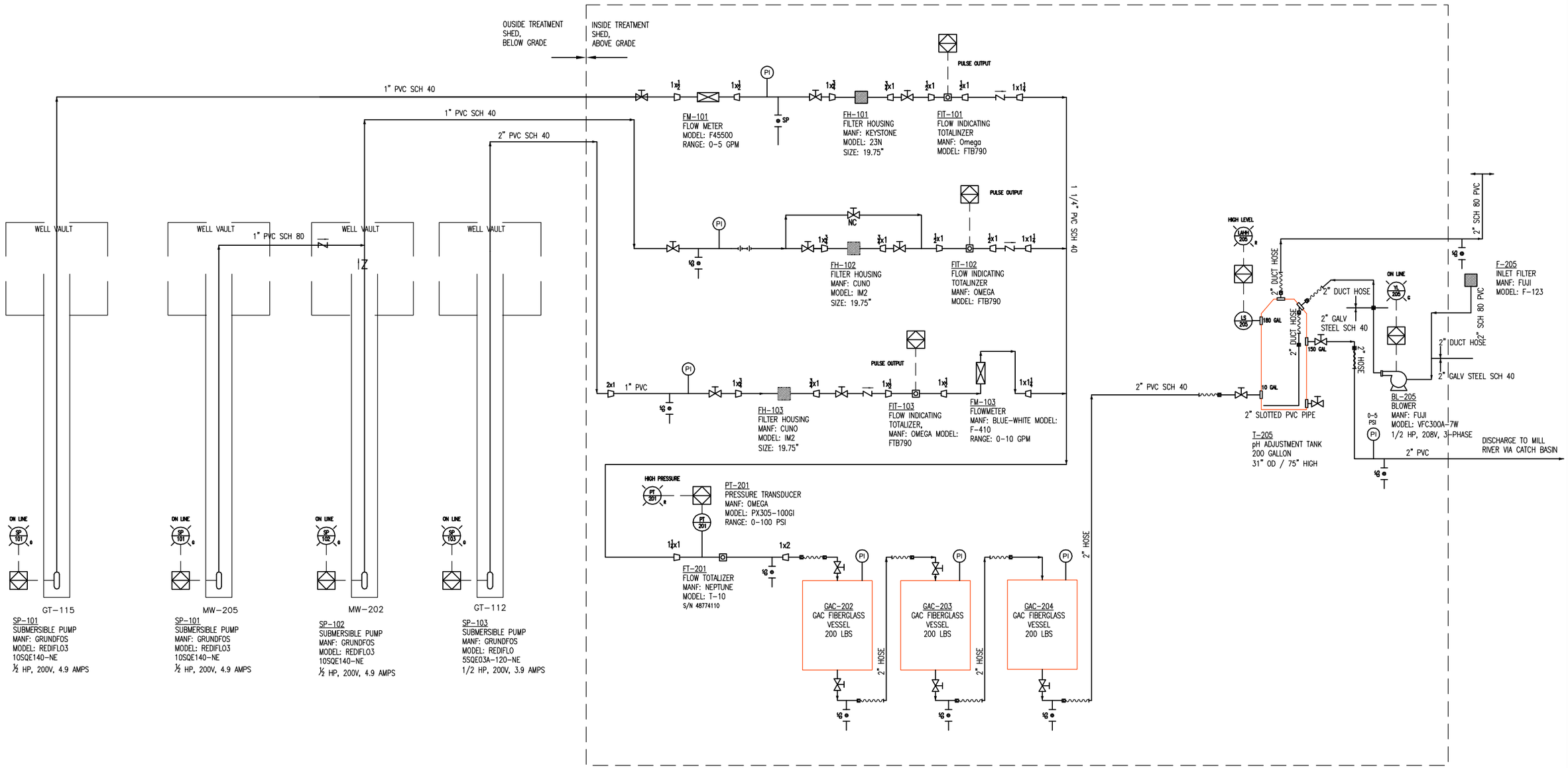

copyright © 2010

NO.	DATE	REVISION DESCRIPTION	BY / CKD

ARCADIS

PUMP AND TREAT SYSTEM
PIPING AND INSTRUMENTATION DIAGRAM

CRANE CO.
Former Signal Technologies Site, 60 Winter Street, Weymouth, MA

PROJECT MANAGER C. CASTELLUCCIO	FILE NUMBER CR-033
CHECKED BY C.CASTELLUCCIO	PROJECT NUMBER MA000679.0010
DRAWN BY B. THERRIAULT	DRAWING NUMBER 1
DATE DRAWN 5/12/06	

Section 3 (a)

Contaminant Information

SUPPLEMENTAL INFORMATION for NOI – Former Microsonics Facility, Weymouth, MA

Section 3. Contaminant Information

The attached table provides a summary of analytical data, as requested in section 3 of the NOI for the RGP in Appendix V. The data provided in this table are discussed below.

- No additional QC deviations were noted for the RGP sample analyses except for the following:
    - The Method Blank (Batch ID: R45797), contained hexachlorobutadiene at 2.13 ug/L, which was not present in the samples.
    - A Laboratory Control Sample (LCS) and Laboratory Sample Duplicate (LCSD) were performed on 11/19/10 (Batch ID: R45797).
        - The % Recovery for 4 out of 71 analytes in the LCS was high outside the control limits
        - The % Recovery for 3 out of 71 analytes in the LCSD was high outside the control limits.
        -
- Laboratory methods used for analysis are the most current and certified standard methods used for the analysis of the list of respective parameters by AMRO Environmental Laboratories Corporation. In a few cases, the following RLs were above those requested by the EPA in Appendix VI.
    - Methylene chloride – effluent limit is 4.6 ug/L → RL is 10 ug/L
    - Total PCBs – effluent limit is 0.000064 ug/L → RL is 0.2 ug/L

  None of the above constituents were detected above their respective RL and do not appear to be a concern for the discharge from the treatment system.

								Maximum Daily Value		Average Daily Value		
#	Parameter *	Believed Absent	Believed Present	Samples	Sample Type	Analytical Method Used	Minimum Level (ML) of Test Method Concentration	Concentration	Mass	Concentration	Mass	Data Package
				(#)	(e.g., grab)	(method #)	(ug/L)	(ug/L)	(kg)	(ug/L)	(kg)	
3	Total Petroleum Hydrocarbons (TPH)	x		1	grab	1664	5,000	0	0	0	0	November 2010
5	Benzene (B)	x		1	grab	8260B	1.0	0	0	0	0	November 2010
6	Toluene (T)	x		1	grab	8260B	2.0	0	0	0	0	November 2010
7	Ethylbenzene (E)	x		1	grab	8260B	2.0	0	0	0	0	November 2010
8	(m,p,o) Xylene (X)	x		1	grab	8260B	2.0	0	0	0	0	November 2010
9	Total Benzene, Toluene, Ethyl Benzene, and Xylenes (BTEX)	x		1	grab	8260B	2.0	0	0	0	0	November 2010
11	Methyl-tert-Butyl Ether (MTBE)	x		1	grab	8260B	2.0	0	0	0	0	November 2010
13	tert-Amyl Methyl Ether (TAME)	x		1	grab	8260B	5.0	0	0	0	0	November 2010
14	Naphthalene	x		1	grab	8260B	5	0	0	0	0	November 2010
15	Carbon Tetrachloride	x		1	grab	8260B	2.0	0	0	0	0	November 2010
16	1,2-Dichlorobenzene (o-DCB)	x		1	grab	8260B	2.0	0	0	0	0	November 2010
17	1,3-Dichlorobenzene (m-DCB)	x		1	grab	8260B	2.0	0	0	0	0	November 2010
18	1,4-Dichlorobenzene (p-DCB)	x		1	grab	8260B	2.0	0	0	0	0	November 2010
19	1,1-Dichloroethane (DCA)		x	2	grab	8260B	2.0	2.6	0.000283	1.3	3.54E-05	November 2010
20	1,2-Dichloroethane (DCA)	x		1	grab	8260B	2.0	0	0	0	0	November 2010
21	1,1-Dichloroethene (DCE)		x	1	grab	8260B	1.0	4.2	0.000458	4.2	0.000114	August 2009
22	cis-1,2-Dichloroethene (DCE)		x	2	grab	8260B	2.0	55	6.00E-03	36.5	9.95E-04	November 2010
23	Methylene Chloride	x		1	grab	8260B	5.0	0	0	0	0	November 2010
24	Tetrachloroethylene (PCE)		x	1	grab	8260B	2.0	5.9	0.000643	5.9	0.000161	August 2009
25	1,1,1-Trichloroethane (TCA)		x	1	grab	8260B	2.0	93	0.010138	93	0.002534	August 2009
26	1,1,2-Trichloroethane (TCA)	x		1	grab	8260B	2.0	0	0	0	0	November 2010
27	Trichloroethene (TCE)		x	2	grab	8260B	2.0	33	3.60E-03	25	6.81E-04	November 2010
28	Vinyl Chloride (chloroethene)		x	1	grab	8260B	2.0	2.2	0.00024	2.2	6E-05	April 2010 System
29	Acetone	x		1	grab	8260B	10	0	0	0	0	November 2010
30	1,4-Dioxane	x		1	grab	8260B	50	0	0	0	0	November 2010
31	Total Phenols	x		1	grab	8270C	20	0	0	0	0	November 2010
32	Pentachlorophenol (PCP)	x		1	grab	8270C SIM	1.0	0	0	0	0	November 2010
33	Total Phthalates (Phthalate esters)	x		1	grab	8270C	10	0	0	0	0	November 2010
34	Bis (2-Ethylhexyl) Phthalate [Di-(ethylhexyl) Phthalate]	x		1	grab	8270C	5	0	0	0	0	November 2010
35	Total Group I Polycyclic Aromatic Hydrocarbons (PAHs)	x		1	grab	8270C	10	0	0	0	0	November 2010
	a. Benzo(a)Anthracene	x		1	grab	8270C	10	0	0	0	0	November 2010
	b. Benzo(a)Pyrene	x		1	grab	8270C	10	0	0	0	0	November 2010
	c. Benzo(b)Fluoranthene	x		1	grab	8270C	10	0	0	0	0	November 2010
	d. Benzo(k)Fluoranthene	x		1	grab	8270C	10	0	0	0	0	November 2010
	e. Chrysene	x		1	grab	8270C	10	0	0	0	0	November 2010
	f. Dibenzo(a,h)Anthracene	x		1	grab	8270C	10	0	0	0	0	November 2010
	g. Indeno(1,2,3-cd)Pyrene	x		1	grab	8270C	10	0	0	0	0	November 2010
36	Total Group II Polycyclic Aromatic Hydrocarbons (PAHs)	x		1	grab	8270C	10	0	0	0	0	November 2010

	h. Acenaphthene	x		1	grab	8270C	10	0	0	0	0	November 2010
	i. Acenaphthylene	x		1	grab	8270C	10	0	0	0	0	November 2010
	j. Anthracene	x		1	grab	8270C	10	0	0	0	0	November 2010
	k. Benzo(g,h,i)Perylene	x		1	grab	8270C	10	0	0	0	0	November 2010
	l. Fluoranthene	x		1	grab	8270C	10	0	0	0	0	November 2010
	m. Fluorene	x		1	grab	8270C	10	0	0	0	0	November 2010
	n. Naphthalene	x		1	grab	8270C	10	0	0	0	0	November 2010
	o. Phenanthrene	x		1	grab	8270C	10	0	0	0	0	November 2010
	p. Pyrene	x		1	grab	8270C	10	0	0	0	0	November 2010
37	Total Polychlorinated Biphenyls (PCBs)	x		1	grab	8082	0.2	0	0	0	0	November 2010
51	Iron		x	1	grab	200.7	100	180	1.96E-02	180	4.91E-03	November 2010
OTHER												
	trans-1,2-dichloroethene		x	1	grab	8260B	2.0	2.8	3.05E-04	2.8	7.63E-05	August 2009

Notes:
blue highlighting indicates that the ML is higher than the EPA effluent limit
purple highlighting indicates that constituent was not necessary for RGP; however results are submitted because analysis was completed

Section 5 (c)

Discharge Location Figure

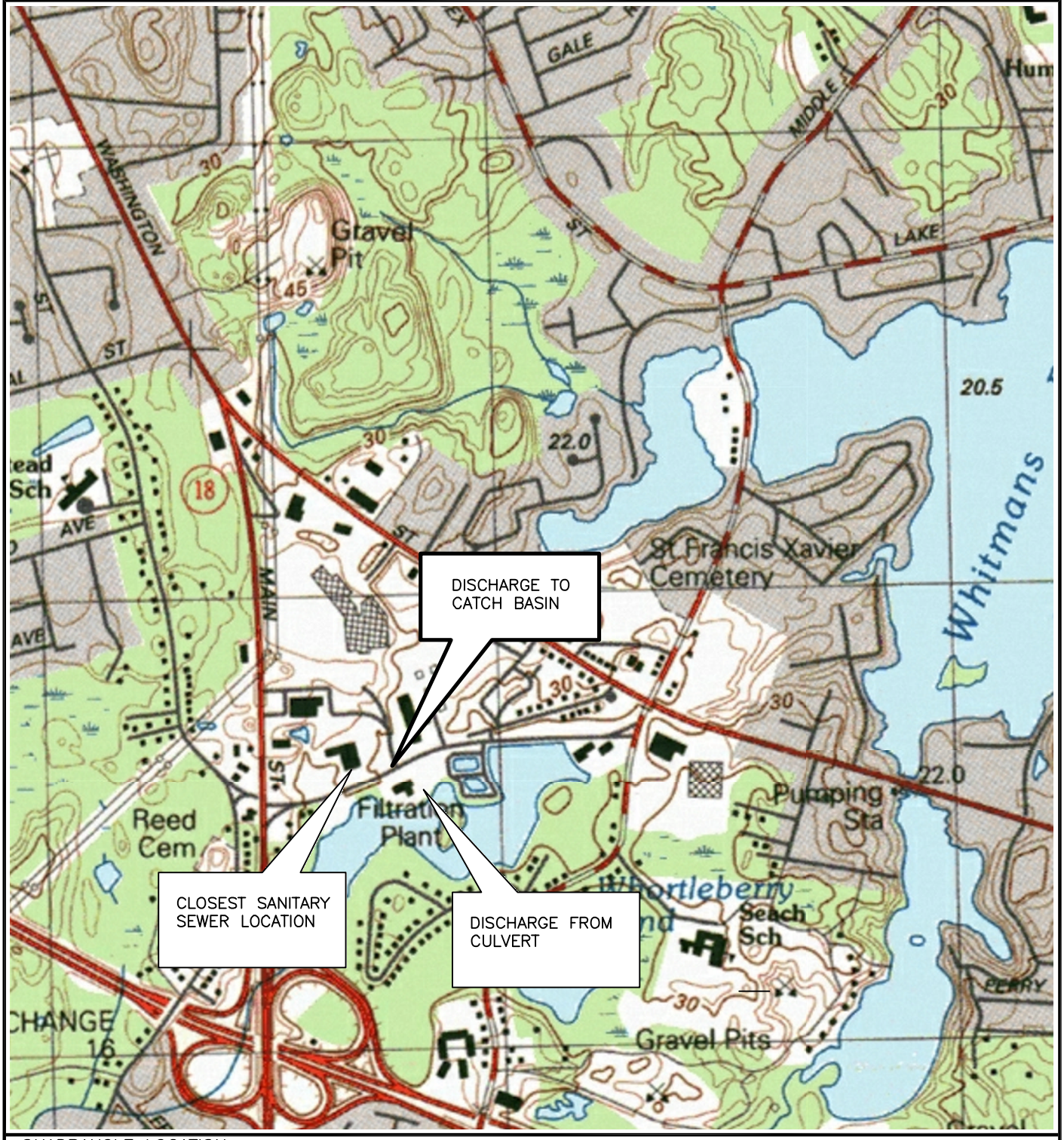

QUADRANGLE LOCATION

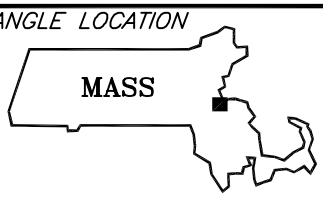

SCALE

0 0.5 1.0

MILES

N

SOURCE: U.S.G.S. 7.5 x 15 WEYMOUTH, MASSACHUSETTS QUADRANGLE, 1984

ARCADIS

DISCHARGE LOCATION NOTICE OF INTENT

60 WINTER STREET
WEYMOUTH, MASSACHUSETTS

FIGURE NUMBER

5C

PROJECT MANAGER: C.CASTELLUCCIO | CHECKED BY: P.SHAH | DRAWN BY: B.THERRIAULT | DATE DRAWN: 12/08/10 | DRAWING NUMBER: CR-015.DWG | PROJECT NUMBER: MA000679.0010

copyright © 2004

RBOWMAN, 01/28/2004, 09:23:23 | FILE: CR-015.DWG

Section 5 (e)

StreamStats Documentation

Streamflow Statistics Report

Date: Tue Feb 06 10:34:46 2007
Latitude: 42.1984
Longitude: -70.9514
Measured Basin Characteristics:
Drainage Area (square miles): 6.09
Stratified Drift Area (square miles): 1.78
Stream Length (miles): 14.21
Slope (percent): 1.02
Region: 0

Statistic	Estimated streamflow, ft^3/s	90% Prediction interval	
		Minimum	Maximum
99-percent duration flow	0.13	0.02	0.52
98-percent duration flow	0.19	0.05	0.68
95-percent duration flow	0.29	0.09	0.93
90-percent duration flow	0.54	0.18	1.56
85-percent duration flow	0.85	0.30	2.38
80-percent duration flow	1.23	0.47	3.21
75-percent duration flow	1.88	0.91	3.83
70-percent duration flow	2.47	1.20	5.00
60-percent duration flow	4.23	2.28	7.82
50-percent duration flow	6.03	3.13	11.58
7-day, 2-year low flow	0.37	0.11	1.22
7-day, 10-year low flow	0.12	0.03	0.47
August median flow	0.97	0.34	2.73

U.S. Department of the Interior, U.S. Geological Survey
10 Bearfoot Road
Northborough, MA 01532
(508) 490-5000

Maintainer: webmaster@mass1.er.usgs.gov

Section 5 (f)

Waterbody Assessment and TMDL Status

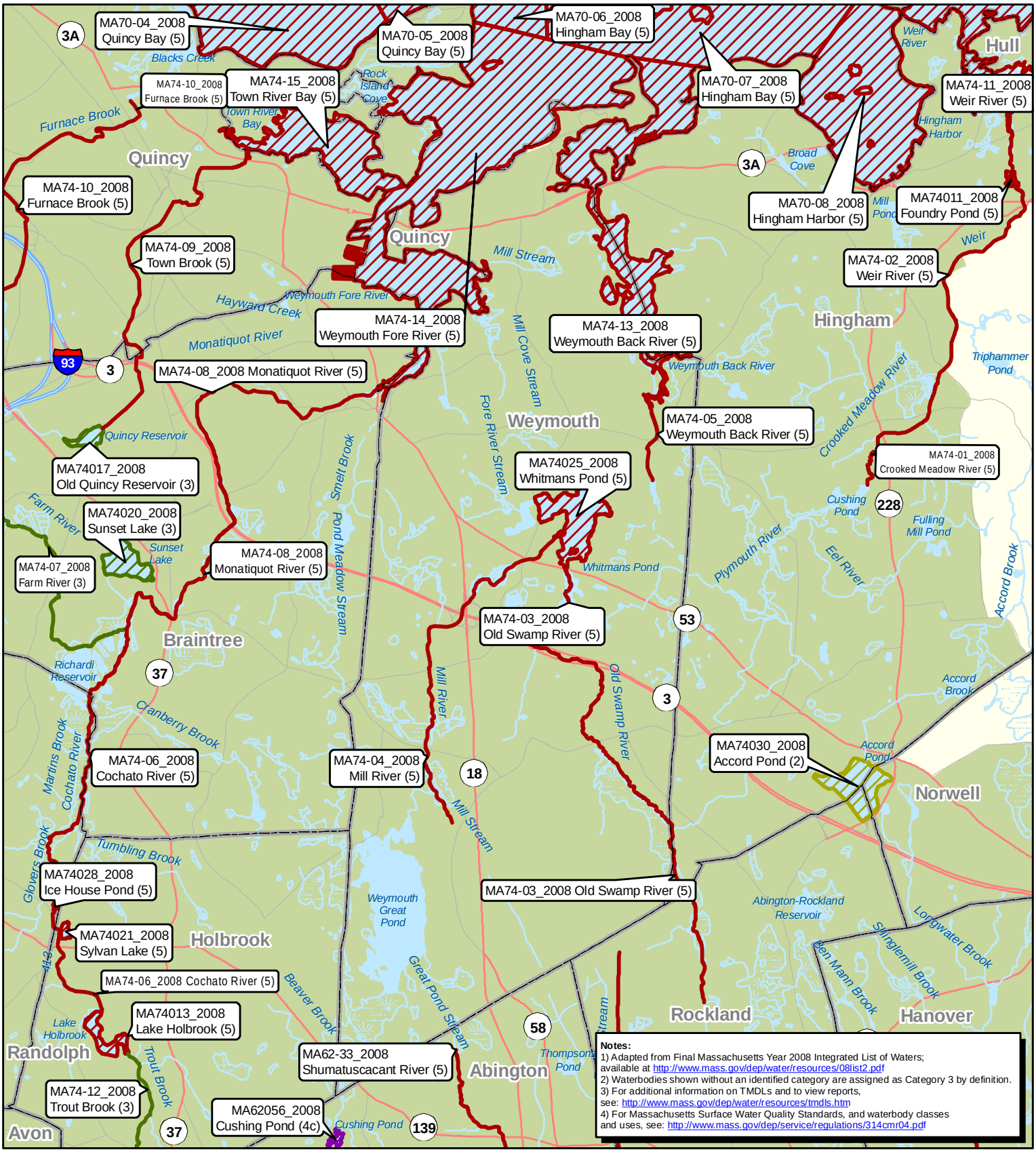

Waterbody Assessment and TMDL Status
Weymouth, MA

N

0 0.5 Miles

EPA

Map produced by EPA Region I GIS Center
Map Tracker ID 6678, February 25, 2010
Data Sources: TeleAtlas, Census Bureau, USGS, MassDEP

Waterbody Label

State ID,
Waterbody Name (Category)
(TMDL(s) approved for this waterbody)

See companion table for a listing of pollutants, non-pollutants, and TMDLs for each waterbody

Assessment of Waterbody Segment

- Category 2: Attaining some uses; other uses not assessed
- Category 3: Insufficient information to make assessments for any use.
- Category 4a: TMDL is completed and approved for one or more pollutants
- Category 4c: Impairment not caused by a pollutant.
- Category 5: Impaired or threatened for one or more uses and requiring a TMDL.

- Waterbodies
- Swamp/Marsh
- MS4 Urbanized Areas (2000 Census)
- Municipal Boundaries

Summary of Waterbody Assessment and TMDL Status in Massachusetts

Weymouth, MA

ID	Waterbody Name	Watershed Name	Category	Acres (In Town - Total)		Miles (In Town - Total)		Cause Non-Pollutant(s)*/Pollutant(s	TMDL
MA74-03_2008	Old Swamp River	Boston Harbor:	5			3.6	5.2		
								Cause Unknown	
								Pathogens	
MA74-04_2008	Mill River	Boston Harbor:	5			3.4	3.4		
								Noxious aquatic plants	
								Nutrients	
								Pathogens	
MA74-05_2008	Weymouth Back River	Boston Harbor:	5			0.7	0.7		
								Organic enrichment/Low DO	
								Pathogens	
MA70-07_2008	Hingham Bay	Boston Harbor	5	0	3070.72				
								Pathogens	
MA74025_2008	Whitmans Pond	Boston Harbor:	5	146.71	146.71				
								Pesticides	
MA74-13_2008	Weymouth Back River	Boston Harbor:	5	132.05	549.1				
								Pathogens	
MA74-14_2008	Weymouth Fore River	Boston Harbor:	5	22.69	1459.36				
								Pathogens	

1) Adapted from Final Massachusetts Year 2008 Integrated List of Waters (CN 281.1, 12/2008); available at http://www.mass.gov/dep/water/resources/08list2.pdf
2) For additional information on TMDLs and to view reports, see: http://www.mass.gov/dep/water/resources/tmdls.htm
3) For Massachusetts Surface Water Quality Standards, and waterbody classes and uses, see: http://www.mass.gov/dep/service/regulations/314cmr04.pdf

Assessment of Waterbody Segment

Category 2 - Attaining some uses; other uses not assessed
Category 3 - Insufficient information to make assessments for any use
Category 4a - TMDL is completed
Category 4c - Impairment not caused by a pollutant
Category 5 - Impaired or threatened for one or more uses and requiring a TMDL

Note: The accuracy of mileage and acreage estimates is limited for waterbodies that serve as or span municipal boundaries

Section 6

ESA and NHPA Eligibility

SUPPLEMENTAL INFORMATION for NOI – Former Microsonics Facility, Weymouth, MA

Section 6. ESA and NHPA Eligibility

(a) Based on a review of available Site information and referencing the MassDEP-Bureau of Waste Site Cleanup MCP Numerical Ranking System map: 500 ft & 0.5 Mile Radii (attached), no endangered or threatened species or their designated critical habitat are likely to occur in proximity to the storm water discharges or discharge related activities. Additionally, the table of "Federally Listed Endangered and Threatened Species in Massachusetts" (attached) indicates that there are no listed species present in Norfolk County. Therefore Criterion A is assigned.
(b) NA
(c) NA
(d) An updated species list is attached, of which none are identified on the map referenced in (a).
(e) Based on our discussions with Michael Ligman in the Technical Services Division at the MA Historical Commission, there would be no potential impact to archaeological or historical Sites as there will be no new construction associated with this existing discharge. Additionally database queries of both the National Register of Historic Places and the Massachusetts Cultural Resource Information System in conjunction with a visual Site inspection indicate that there are no historical properties that would be impacted by the discharge. Therefore, Criterion 1 is assigned.
(f) NA

FEDERALLY LISTED ENDANGERED AND THREATENED SPECIES IN MASSACHUSETTS

COUNTY	SPECIES	FEDERAL STATUS	GENERAL LOCATION/HABITAT	TOWNS
Barnstable	Piping Plover	Threatened	Coastal Beaches	All Towns
	Roseate Tern	Endangered	Coastal beaches and the Atlantic Ocean	All Towns
	Northeastern beach tiger beetle	Threatened	Coastal Beaches	Chatham
	Sandplain gerardia	Endangered	Open areas with sandy soils.	Sandwich and Falmouth.
	Northern Red-bellied Cooter	Endangered	Inland Ponds and Rivers	Bourne (north of the Cape Cod Canal)
Berkshire	Bog Turtle	Threatened	Wetlands	Egremont and Sheffield
Bristol	Piping Plover	Threatened	Coastal Beaches	Fairhaven, Dartmouth, Westport
	Roseate Tern	Endangered	Coastal beaches and the Atlantic Ocean	Fairhaven, New Bedford, Dartmouth, Westport
	Northern Red-bellied Cooter	Endangered	Inland Ponds and Rivers	Taunton
Dukes	Roseate Tern	Endangered	Coastal beaches and the Atlantic Ocean	All Towns
	Piping Plover	Threatened	Coastal Beaches	All Towns
	Northeastern beach tiger beetle	Threatened	Coastal Beaches	Aquinnah and Chilmark
	Sandplain gerardia	Endangered	Open areas with sandy soils.	West Tisbury
Essex	Small whorled Pogonia	Threatened	Forests with somewhat poorly drained soils and/or a seasonally high water table	Gloucester, Essex and Manchester
	Piping Plover	Threatened	Coastal Beaches	Gloucester, Essex, Ipswich, Rowley, Revere, Newbury, Newburyport and Salisbury
Franklin	Northeastern bulrush	Endangered	Wetlands	Montague
	Dwarf wedgemussel	Endangered	Mill River	Whately
Hampshire	Small whorled Pogonia	Threatened	Forests with somewhat poorly drained soils and/or a seasonally high water table	Hadley
	Puritan tiger beetle	Threatened	Sandy beaches along the Connecticut River	Northampton and Hadley
	Dwarf wedgemussel	Endangered	Rivers and Streams.	Hadley, Hatfield, Amherst and Northampton
Hampden	Small whorled Pogonia	Threatened	Forests with somewhat poorly drained soils and/or a seasonally high water table	Southwick
Middlesex	Small whorled Pogonia	Threatened	Forests with somewhat poorly drained soils and/or a seasonally high water table	Groton
Nantucket	Piping Plover	Threatened	Coastal Beaches	Nantucket
	Roseate Tern	Endangered	Coastal beaches and the Atlantic Ocean	Nantucket
	American burying beetle	Endangered	Upland grassy meadows	Nantucket
Plymouth	Piping Plover	Threatened	Coastal Beaches	Scituate, Marshfield, Duxbury, Plymouth, Wareham and Mattapoisett
	Northern Red-bellied Cooter	Endangered	Inland Ponds and Rivers	Kingston, Middleborough, Carver, Plymouth, Bourne, Wareham, Halifax, and Pembroke
	Roseate Tern	Endangered	Coastal beaches and the Atlantic Ocean	Plymouth, Marion, Wareham, and Mattapoisett.
Suffolk	Piping Plover	Threatened	Coastal Beaches	Winthrop
Worcester	Small whorled Pogonia	Threatened	Forests with somewhat poorly drained soils and/or a seasonally high water table	Leominster

-Eastern cougar and gray wolf are considered extirpated in Massachusetts.
-Endangered gray wolves are not known to be present in Massachusetts, but dispersing individuals from source populations in Canada may occur statewide.
-Critical habitat for the Northern Red-bellied Cooter is present in Plymouth County.

Revised 06/22/2009

Group	Name	Population	Status	Lead Office	Recovery Plan Name	Recovery Plan Stage
Birds	Arctic peregrine Falcon (Falco		Recovery	Fairbanks Fish And Wildlife		
Reptiles	Hawksbill sea turtle		Endangered	North Florida Ecological	Recovery Plan for the Hawksbill	Final Revision 1
Reptiles	Hawksbill sea turtle		Endangered	North Florida Ecological	Recovery Plan for U.S. Pacific	Final Revision 1
Reptiles	Leatherback sea turtle		Endangered	North Florida Ecological	Recovery Plan for U.S. Pacific	Final Revision 1
Reptiles	Leatherback sea turtle		Endangered	North Florida Ecological	Recovery Plan for Leatherback	Final Revision 1
Reptiles	Green sea turtle (Chelonia	except where endangered	Threatened	North Florida Ecological	Recovery Plan for U.S.	Final Revision 1
Reptiles	Green sea turtle (Chelonia	except where endangered	Threatened	North Florida Ecological	Recovery Plan for U.S. Pacific	Final Revision 1
Reptiles	Loggerhead sea turtle (Caretta		Threatened	North Florida Ecological	Recovery Plan for U.S. Pacific	Final Revision 1
Reptiles	Loggerhead sea turtle (Caretta		Threatened	North Florida Ecological	Recovery Plan for the Northwest	Final Revision 2

MassDEP - Bureau of Waste Site Cleanup

MCP Numerical Ranking System Map: 500 feet & 0.5 Mile Radii

Site Name:
Crane
60 Winter Street
Weymouth, MA
RTN:
NAD83 MA Coordinates:
245112mE, 883383mN

December 8, 2010

The information shown on this map is the best available at the date of printing. For more information please refer to www.mass.gov/mgis/massgis.htm

MassDEP
Commonwealth of Massachusetts
Department of Environmental Protection

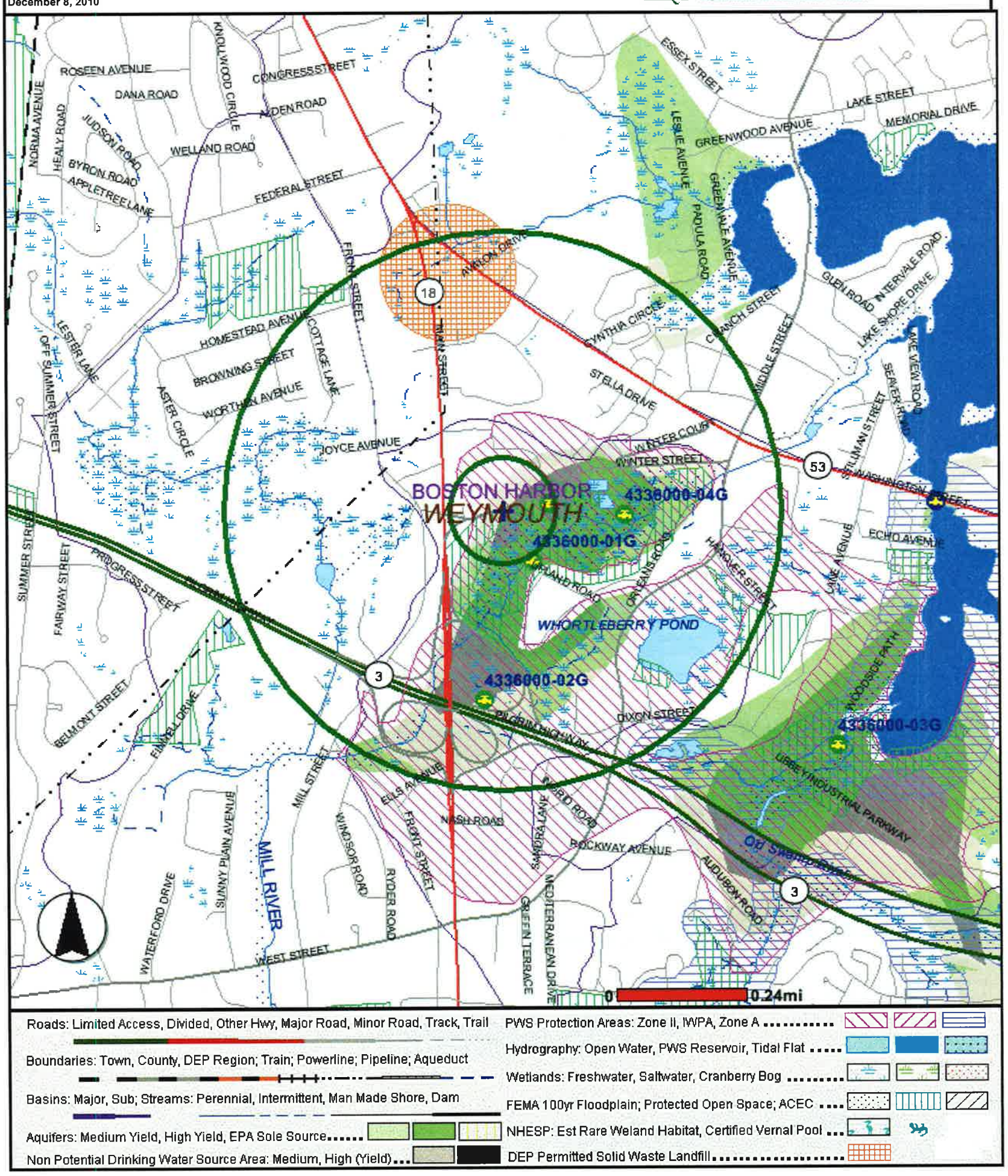

Roads: Limited Access, Divided, Other Hwy, Major Road, Minor Road, Track, Trail
Boundaries: Town, County, DEP Region; Train; Powerline; Pipeline; Aqueduct
Basins: Major, Sub; Streams: Perennial, Intermittent, Man Made Shore, Dam
Aquifers: Medium Yield, High Yield, EPA Sole Source
Non Potential Drinking Water Source Area: Medium, High (Yield)
PWS Protection Areas: Zone II, IWPA, Zone A
Hydrography: Open Water, PWS Reservoir, Tidal Flat
Wetlands: Freshwater, Saltwater, Cranberry Bog
FEMA 100yr Floodplain; Protected Open Space; ACEC
NHESP: Est Rare Weland Habitat, Certified Vernal Pool
DEP Permitted Solid Waste Landfill

LABORATORY DATA
PACKAGES

AMRO Environmental Laboratories Corporation

111 Herrick Street, Merrimack, NH 03054
TEL: (603) 424-2022 • FAX: (603) 429-8496
www.amrolabs.com

August 31, 2009

ANALYTICAL TEST RESULTS

Chuck Castelluccio
ARCADIS U.S., Inc.
2 Executive Drive
Suite 303
Chelmsford, MA 01824
TEL: 978-937-9999
FAX: (978) 937-7555

Subject: MA000690 Crane

Workorder No.: 0908051

Dear Chuck Castelluccio:

AMRO Environmental Laboratories Corp. received 4 samples on 8/21/2009 for the analyses presented in the following report.

AMRO is accredited in accordance with NELAC and certifies that these test results meet all the requirements of NELAC, where applicable, unless otherwise noted in the case narrative.

The enclosed Sample Receipt Checklist details the condition of your sample(s) upon receipt. Please be advised that any unused sample volume and sample extracts will be stored for a period of 60 days from sample receipt date (90 days for samples from New York). After this time, AMRO will properly dispose of the remaining sample(s). If you require further analysis, or need the samples held for a longer period, please contact us immediately.

This report consists of a total of 31 pages. This letter is an integral part of your data report. All results in this project relate only to the sample(s) as received by the laboratory and documented in the Chain-of-Custody. This report shall not be reproduced except in full, without the written approval of the laboratory. If you have any questions regarding this project in the future, please refer to the Workorder Number above.

Sincerely,

Nancy Stewart
Vice President

State Certifications: NH (NELAC): 1001, MA: M-NH012, CT: PH-0758, NY: 11278 (NELAC), ME: NH012 and 1001, NJ: NH125, RI: 00105, U.S. Army Corps of Engineers (USACE), Naval Facilities Engineering Service Center (NFESC).

Hard copy of the State Certification is available upon request.

AMRO Environmental Laboratories Corp.

Date: *28-Aug-09*

CLIENT: ARCADIS U.S., Inc.
Project: MA000690 Crane
Lab Order: 0908051
Date Received: 8/21/2009

Work Order Sample Summary

Lab Sample ID	Client Sample ID	Collection Date	Collection Time
0908051-01A	Influent	8/19/2009	12:10 PM
0908051-02A	Effluent	8/19/2009	12:20 PM
0908051-03A	GT-115 (new)	8/19/2009	12:30 PM
0908051-04A	Trip Blank	8/19/2009	12:00 AM

AMRO Environmental Laboratories Corp.

28-Aug-09

Lab Order: 0908051
Client: ARCADIS U.S., Inc.
Project: MA000690 Crane

DATES REPORT

Sample ID	Client Sample ID	Collection Date	Matrix	Analytical Test Name / Preparatory Test Name	Prep Date	Analysis Date / Batch ID	TCLP Date
0908051-01A	Influent	8/19/2009 12:10:00 PM	Groundwater	EPA 8260B HALOGENATED VOCs by GC/MS		8/25/2009	
				EPA 5030B	8/19/2009	R43024	
				EPA 8260B HALOGENATED VOCs by GC/MS		8/25/2009	
					8/19/2009	R43024	
0908051-02A	Effluent	8/19/2009 12:20:00 PM		EPA 8260B HALOGENATED VOCs by GC/MS		8/25/2009	
					8/19/2009	R43024	
0908051-03A	GT-115 (new)	8/19/2009 12:30:00 PM		EPA 8260B HALOGENATED VOCs by GC/MS		8/27/2009	
					8/19/2009	R43043	
				EPA 8260B HALOGENATED VOCs by GC/MS		8/25/2009	
					8/19/2009	R43024	
0908051-04A	Trip Blank	8/19/2009	Trip Blank	EPA 8260B HALOGENATED VOCs by GC/MS		8/24/2009	
					8/19/2009	R43016	

AMRO Environmental Laboratories Corporation
111 Herrick Street
Merrimack, NH 03054

CHAIN-OF-CUSTODY RECORD

58934

Office: (603) 424-2022
Fax: (603) 429-8496
web: www.amrolabs.com

Project No.:	Project Name:	Project State:	Project Manager:	Samplers (Signature):	AMRO Project No.:
MA000690	CRANE	MA	C. CASTELLUCCIO		0908051

P.O.#:	Results Needed by:	QUOTE #:	Seal Intact? Yes No N/A

Sample ID.:	Date/Time Sampled	Matrix	Total # of Cont. & Size	Comp.	Grab	VOC *Chlorinated	Remarks
Influent	8/19/09 1210	GW	2 VOA		X		CONTACT BRIAN T. @ 978-937-9999 FOR DETAILS EXT. 334
Effluent	1220	GW	2 VOA		X		
GT-115 (new)	1230	GW	2 VOA		X		
TRIP BLANK	—	LW	1 VOA				

Preservative: Cl-HCl, MeOH, N-HN03, S-H2SO4, Na-NaOH, O- Other C1 C1

Send Results To: ARCADIS
2 EXECUTIVE DR #303
CHELMSFORD, MA 01824

PRIORITY TURNAROUND TIME AUTHORIZATION
Before submitting samples for expedited TAT, you must *have a coded AUTHORIZATION NUMBER*
AUTHORIZATION No.: BY:

METALS 8 RCRA ☐ 13 PP ☐ 23 TAL ☐ 14 MCP ☐
Method: 6010 ☐ 200.7 ☐ Other Metals:
Dissolved Metals Field Filtered? YES ☐ NO ☐

PHONE # 978 937-9999 FAX #: 978-937-7555
E-mail:

MCP Presumptive Certainty Required? YES ☒ NO ☐
MCP Methods Needed: YES ☒ NO ☐
Required Reporting Limits: S-1 ☒ GW-1 ☒ S-2 ☐ GW-2 ☐ S-3 ☐ GW-3 ☐ Other:
AMRO report package level needed:
EDD required:

Relinquished By:	Date/Time	Received By
	8/21/09 0950	
	8/21/09 1038	

Please print clearly, legibly and completely. Samples can not be logged in and the turnaround time clock will not start until any ambiguities are resolved.

Samples arriving after 12:00 noon will be tracked and billed as received on the following day.

AMRO policy requires notification in writing to the laboratory in cases where the samples were collected from highly contaminated sites.

KNOWN SITE CONTAMINATION:

White: Lab Copy Yellow: Client Copy

SHEET 1 OF 1

AMROCOC2004, Rev.3 08/18/04

AMRO Environmental Laboratories Corporation

SAMPLE RECEIPT CHECKLIST

111 Herrick Street
Merrimack, NH 03054
(603) 424-2022

Client:	ARCADIS US	AMRO ID:	0908051
Project Name:	CRANE	Date Rec.:	8-21-09
Ship via: (circle one) Fed Ex., UPS, AMRO Courier, Hand Del., Other Courier, Other:		Date Due:	8-28-09

Items to be Checked Upon Receipt	Yes	No	NA	Comments
1. Army Samples received in individual plastic bags?			✓	
2. Custody Seals present?			✓	
3. Custody Seals Intact?			✓	
4. Air Bill included in folder if received?			✓	
5. Is COC included with samples?	✓			
6. Is COC signed and dated by client?	✓			
7. Laboratory receipt temperature. TEMP = 5.9°				
Samples rec. with ice ✓ ice packs___ neither___				
8. Were samples received the same day they were sampled?		✓		
Is client temperature = or <6°C ?	✓			
If no obtain authorization from the client for the analyses.				
Client authorization from: Date: Obtained by:				
9. Is the COC filled out correctly and completely?	✓			
10. Does the info on the COC match the samples?	✓			
11. Were samples rec. within holding time?	✓			
12. Were all samples properly labeled?	✓			
13. Were all samples properly preserved?	✓			
14. Were proper sample containers used?	✓			
15. Were all samples received intact? (none broken or leaking)	✓			
16. Were VOA vials rec. with no air bubbles?	✓			
17. Were the sample volumes sufficient for requested analysis?	✓			
18. Were all samples received?	✓			
19. VPH and VOA Soils only:			✓	
Sampling Method VPH (circle one): M=Methanol, E=EnCore (air-tight container)				
Sampling Method VOA (circle one): M=Methanol, SB=Sodium Bisulfate, E=EnCore, B=Bulk				
If M or SB:				
Does preservative cover the soil?				
If NO then client must be faxed.				
Does preservation level come close to the fill line on the vial?				
If NO then client must be faxed.				
Were vials provided by AMRO?				
If NO then weights MUST be obtained from client				
Was dry weight aliquot provided?				
If NO then fax client and inform the VOA lab ASAP.				
20. Subcontracted Samples:			✓	
What samples sent:				
Where sent:				
Date:				
Analysis:				
TAT:				
21. Information entered into:				
Internal Tracking Log?	✓			
Dry Weight Log?			✓	
Client Log?			✓	
Composite Log?			✓	
Filtration Log?			✓	

Received By: MG	Date: 8-21-09	Logged in By: CC	Date: 8-21-09
Labeled By: CC	Date: 8-21-09	Checked By: MG	Date: 8-24-09

NA= Not Applicable

AMRO Environmental
Laboratories Corporation

111 Herrick Street
Merrimack, NH 03054
(603) 424-2022

Please Circle if:
Sample= Soil
Sample= Waste

AMRO ID: 0908051

Sample ID	Analysis	Volume Sample	Preserv. Listed	Initial pH*	Acceptable? Y or N	List Preserv. Added by AMRO	Solution ID # of Preserv.	Volume Preservative Added	Final adjusted pH	Final adjusted pH (after 16 or 24 hours)
01A-03A	VOC	2-40ml	HCl	—	—					
04A	VOC	1-40ml	HCl	—	—					

** = if the laboratory preserves the drinking water sample (s) for EPA Method 200 series, sample (s) should be held at least 16 hours prior to analysis or 24 hours for water sample (s).*

pH Checked By: _____ Date: _____ pH adjusted By: _____ Date: _____

pH Checked By: _____ Date: _____ pH adj.(16 or 24hrs)By: _____ Date: _____

CLIENT: ARCADIS U.S., Inc.
Project: MA000690 Crane
Lab Order: 0908051

CASE NARRATIVE

GC/MS VOLATILES:

1. A short list of halogenated compounds were reported for samples Influent (0908051-01A) and Effluent (0908051-02A) per the client request.

2. Halogenated compounds reported for samples GT-115 (new) (0908051-03A) and Trip Blank (0908051-04A) per the client request.

MADEP MCP Analytical Method Report Certification Form

Laboratory Name: AMRO Environmental Laboratories, Inc. Project Number: 0908051

Project Location: MA000690 Crane MADEP RTN [1]

0908051-01	0908051-02	0908051-03	0908051-04			

Sample Matrices: Ground Water ☑ Soil / Sediment ☐ Drinking Water ☐ OtherMatrix ☐

MCP SW-846 Methods Used					
	8260B ☑	8151A ☐	8330 ☐	6010B ☐	7470A/1A ☐
	8270C ☐	8081A ☐	VPH ☐	6020 ☐	9014M [2] ☐
As specified in MADEP Compendium of Analytical Methods (check all that apply)	8082 ☐	8021B ☐	EPH ☐	7000S [3] ☐	Other ☐

1 List Release Tracking Number (RTN) if known
2 M - SW-846 Method 9014 or MADEP Physiologically Available Cyanide (PAC) Method
3 S SW-846 Methods 7000 Series List individual method analyte.

An affirmative response to questions A, B, C and D is required for "Presumptive Certainty" status

A	Were all samples received by the laboratory in a condition consistent with that described on the Chain of Custody documentation for the data set?	◉ Yes ○ No [1]
B	Were all QA/QC procedures required for the specified analytical method(s)included in this report followed, including the requirement to note and discuss in a narrative QC data that did not meet appropriate performance standards or guide lines?	◉ Yes ○ No [1]
C	Does the analytical data included in this report meet all the requirements for Presumptive Certainty, as described in Section 2.0 of the MADEP document CAM VII A, Quality Assurance and Quality Control Guidelines for the Acquisition and Reporting of Analytical Data?	◉ Yes ○ No [1]
D	**VPH and EPH methods only:** Was the VPH or EPH method run without significant modifications, as specified in Section 11.3?	~~○ Yes ◉ No~~ [1] N/A NS 8/31/09

A response to questions E and F below is required for "Presumptive Certainty" status

E	Were all QC performance standards and recommendations for the specified methods achieved?	◉ Yes ○ No [1]
F	Were results for all analyte-list compounds / elements for the specified method(s) reported?	○ Yes ◉ No [1]

[1] All NO answers must be addressed in an attached Environmental Laboratory case narrative.

I, the undersigned, attest under the pains and penalties of perjury that, based upon my personal inqury of those responsible for obtaining the information, the material contained in this analytical report is, to the best of my knowledge and belief, accurate and complete.

Signature: Nancy Stewart Position: Lab Director

Printed Name: Nancy Stewart Date: 8/31/09

DATA COMMENT PAGE

Organic Data Qualifiers

ND	Indicates compound was analyzed for, but not detected at or above the reporting limit.
J	Indicates an estimated value. This flag is used either when estimating a concentration for tentatively identified compounds where a 1:1 response is assumed, or when the data indicates the presence of a compound that meets the identification criteria but the result is less than the sample quantitation limit but greater than the method detection limit.
H	Method prescribed holding time exceeded.
E	This flag identifies compounds whose concentrations exceed the calibration range of the instrument for that specific analysis.
B	This flag is used when the analyte is found in the associated blank as well as in the sample.
R	RPD outside accepted recovery limits
RL	Reporting limit; defined as the lowest concentration the laboratory can accurately quantitate.
S	Spike Recovery outside accepted recovery limits.
#	See Case Narrative

Micro Data Qualifiers

TNTC	Too numerous to count

Inorganic Data Qualifiers

ND or U	Indicates element was analyzed for, but not detected at or above the reporting limit.
J	Indicates a value greater than or equal to the method detection limit, but less than the quantitation limit.
H	Indicates analytical holding time exceedance.
B	Indicates that the analyte is found in the associated blank, as well as in the sample.
MSA	Indicates value determined by the Method of Standard Addition
E	This flag identifies compounds whose concentrations exceed the calibration range of the instrument for that specific analysis.
R	RPD outside accepted recovery limits
RL	Reporting limit; defined as the lowest concentration the laboratory can accurately quantitate.
S	Spike Recovery outside accepted recovery limits.
W	Post-digestion spike for Furnace AA analysis is out of control limits (85-115), while sample absorbance is less than 50% of spike absorbance.
*	Duplicate analysis not within control limits.
+	Indicates the correlation coefficient for the Method of Standard Addition is less than 0.995
#	See Case Narrative

Report Comments:

1. Soil, sediment and sludge sample results are reported on a "dry weight" basis.
2. Reporting limits are adjusted for sample size used, dilutions and moisture content, if applicable.

AMRO Environmental Laboratories Corp.

Date: *28-Aug-09*

CLIENT:	ARCADIS U.S., Inc.	**Client Sample ID:**	Influent
Lab Order:	0908051	**Collection Date:**	8/19/2009 12:10:00 PM
Project:	MA000690 Crane	**Matrix:**	GROUNDWATER
Lab ID:	0908051-01A		

Analyses	Result	RL	Qual	Units	DF	Date Analyzed
EPA 8260B HALOGENATED VOLATILES BY GC/M SW8260B						Analyst: **SK**
Vinyl chloride	ND	2.0		µg/L	1	8/25/2009 2:20:00 PM
1,1-Dichloroethene	4.2	1.0		µg/L	1	8/25/2009 2:20:00 PM
trans-1,2-Dichloroethene	2.8	2.0		µg/L	1	8/25/2009 2:20:00 PM
1,1-Dichloroethane	14	2.0		µg/L	1	8/25/2009 2:20:00 PM
cis-1,2-Dichloroethene	280	20		µg/L	10	8/25/2009 2:55:00 PM
1,1,1-Trichloroethane	93	2.0		µg/L	1	8/25/2009 2:20:00 PM
Trichloroethene	300	20		µg/L	10	8/25/2009 2:55:00 PM
Tetrachloroethene	5.9	2.0		µg/L	1	8/25/2009 2:20:00 PM
Surr: Dibromofluoromethane	111	70-130		%REC	1	8/25/2009 2:20:00 PM
Surr: 1,2-Dichloroethane-d4	119	70-130		%REC	1	8/25/2009 2:20:00 PM
Surr: Toluene-d8	98.5	70-130		%REC	1	8/25/2009 2:20:00 PM
Surr: 4-Bromofluorobenzene	95.4	70-130		%REC	1	8/25/2009 2:20:00 PM

AMRO Environmental Laboratories Corp.

Date: *28-Aug-09*

CLIENT:	ARCADIS U.S., Inc.	**Client Sample ID:**	Effluent
Lab Order:	0908051	**Collection Date:**	8/19/2009 12:20:00 PM
Project:	MA000690 Crane	**Matrix:**	GROUNDWATER
Lab ID:	0908051-02A		

Analyses	Result	RL	Qual	Units	DF	Date Analyzed
EPA 8260B HALOGENATED VOLATILES BY GC/M SW8260B						Analyst: **SK**
Vinyl chloride	ND	2.0		µg/L	1	8/25/2009 1:45:00 PM
1,1-Dichloroethene	ND	1.0		µg/L	1	8/25/2009 1:45:00 PM
trans-1,2-Dichloroethene	ND	2.0		µg/L	1	8/25/2009 1:45:00 PM
1,1-Dichloroethane	ND	2.0		µg/L	1	8/25/2009 1:45:00 PM
cis-1,2-Dichloroethene	ND	2.0		µg/L	1	8/25/2009 1:45:00 PM
1,1,1-Trichloroethane	ND	2.0		µg/L	1	8/25/2009 1:45:00 PM
Trichloroethene	ND	2.0		µg/L	1	8/25/2009 1:45:00 PM
Tetrachloroethene	ND	2.0		µg/L	1	8/25/2009 1:45:00 PM
Surr: Dibromofluoromethane	114	70-130		%REC	1	8/25/2009 1:45:00 PM
Surr: 1,2-Dichloroethane-d4	116	70-130		%REC	1	8/25/2009 1:45:00 PM
Surr: Toluene-d8	100	70-130		%REC	1	8/25/2009 1:45:00 PM
Surr: 4-Bromofluorobenzene	97.2	70-130		%REC	1	8/25/2009 1:45:00 PM

AMRO Environmental Laboratories Corp.

Date: *28-Aug-09*

CLIENT:	ARCADIS U.S., Inc.	**Client Sample ID:**	GT-115 (new)
Lab Order:	0908051	**Collection Date:**	8/19/2009 12:30:00 PM
Project:	MA000690 Crane	**Matrix:**	GROUNDWATER
Lab ID:	0908051-03A		

Analyses	Result	RL	Qual	Units	DF	Date Analyzed
EPA 8260B HALOGENATED VOLATILES BY GC/M SW8260B						Analyst: SK
Chloromethane	ND	5.0		µg/L	1	8/25/2009 3:29:00 PM
Vinyl chloride	ND	2.0		µg/L	1	8/25/2009 3:29:00 PM
Chloroethane	ND	5.0		µg/L	1	8/25/2009 3:29:00 PM
Bromomethane	ND	2.0		µg/L	1	8/25/2009 3:29:00 PM
1,1-Dichloroethene	4.3	1.0		µg/L	1	8/25/2009 3:29:00 PM
Methylene chloride	ND	5.0		µg/L	1	8/25/2009 3:29:00 PM
trans-1,2-Dichloroethene	ND	2.0		µg/L	1	8/25/2009 3:29:00 PM
1,1-Dichloroethane	12	2.0		µg/L	1	8/25/2009 3:29:00 PM
cis-1,2-Dichloroethene	270	2.0		µg/L	1	8/25/2009 3:29:00 PM
Chloroform	ND	2.0		µg/L	1	8/25/2009 3:29:00 PM
1,1,1-Trichloroethane	130	2.0		µg/L	1	8/25/2009 3:29:00 PM
Carbon tetrachloride	ND	2.0		µg/L	1	8/25/2009 3:29:00 PM
1,2-Dichloroethane	ND	2.0		µg/L	1	8/25/2009 3:29:00 PM
Trichloroethene	350	20		µg/L	10	8/27/2009 6:59:00 PM
1,2-Dichloropropane	ND	2.0		µg/L	1	8/25/2009 3:29:00 PM
Bromodichloromethane	ND	2.0		µg/L	1	8/25/2009 3:29:00 PM
cis-1,3-Dichloropropene	ND	1.0		µg/L	1	8/25/2009 3:29:00 PM
trans-1,3-Dichloropropene	ND	1.0		µg/L	1	8/25/2009 3:29:00 PM
1,1,2-Trichloroethane	ND	2.0		µg/L	1	8/25/2009 3:29:00 PM
Tetrachloroethene	9.8	2.0		µg/L	1	8/25/2009 3:29:00 PM
Dibromochloromethane	ND	2.0		µg/L	1	8/25/2009 3:29:00 PM
Chlorobenzene	ND	2.0		µg/L	1	8/25/2009 3:29:00 PM
Bromoform	ND	2.0		µg/L	1	8/25/2009 3:29:00 PM
1,1,2,2-Tetrachloroethane	ND	2.0		µg/L	1	8/25/2009 3:29:00 PM
1,3-Dichlorobenzene	ND	2.0		µg/L	1	8/25/2009 3:29:00 PM
1,4-Dichlorobenzene	ND	2.0		µg/L	1	8/25/2009 3:29:00 PM
1,2-Dichlorobenzene	ND	2.0		µg/L	1	8/25/2009 3:29:00 PM
Surr: Dibromofluoromethane	107	70-130		%REC	1	8/25/2009 3:29:00 PM
Surr: 1,2-Dichloroethane-d4	110	70-130		%REC	1	8/25/2009 3:29:00 PM
Surr: Toluene-d8	92.2	70-130		%REC	1	8/25/2009 3:29:00 PM
Surr: 4-Bromofluorobenzene	95.8	70-130		%REC	1	8/25/2009 3:29:00 PM

AMRO Environmental Laboratories Corp.

Date: *28-Aug-09*

CLIENT:	ARCADIS U.S., Inc.	**Client Sample ID:**	Trip Blank
Lab Order:	0908051	**Collection Date:**	8/19/2009
Project:	MA000690 Crane	**Matrix:**	TRIP BLANK
Lab ID:	0908051-04A		

Analyses	Result	RL	Qual	Units	DF	Date Analyzed
EPA 8260B HALOGENATED VOLATILES BY GC/M SW8260B						Analyst: **SK**
Chloromethane	ND	5.0		µg/L	1	8/24/2009 1:39:00 PM
Vinyl chloride	ND	2.0		µg/L	1	8/24/2009 1:39:00 PM
Chloroethane	ND	5.0		µg/L	1	8/24/2009 1:39:00 PM
Bromomethane	ND	2.0		µg/L	1	8/24/2009 1:39:00 PM
1,1-Dichloroethene	ND	1.0		µg/L	1	8/24/2009 1:39:00 PM
Methylene chloride	ND	5.0		µg/L	1	8/24/2009 1:39:00 PM
trans-1,2-Dichloroethene	ND	2.0		µg/L	1	8/24/2009 1:39:00 PM
1,1-Dichloroethane	ND	2.0		µg/L	1	8/24/2009 1:39:00 PM
cis-1,2-Dichloroethene	ND	2.0		µg/L	1	8/24/2009 1:39:00 PM
Chloroform	ND	2.0		µg/L	1	8/24/2009 1:39:00 PM
1,1,1-Trichloroethane	ND	2.0		µg/L	1	8/24/2009 1:39:00 PM
Carbon tetrachloride	ND	2.0		µg/L	1	8/24/2009 1:39:00 PM
1,2-Dichloroethane	ND	2.0		µg/L	1	8/24/2009 1:39:00 PM
Trichloroethene	ND	2.0		µg/L	1	8/24/2009 1:39:00 PM
1,2-Dichloropropane	ND	2.0		µg/L	1	8/24/2009 1:39:00 PM
Bromodichloromethane	ND	2.0		µg/L	1	8/24/2009 1:39:00 PM
cis-1,3-Dichloropropene	ND	1.0		µg/L	1	8/24/2009 1:39:00 PM
trans-1,3-Dichloropropene	ND	1.0		µg/L	1	8/24/2009 1:39:00 PM
1,1,2-Trichloroethane	ND	2.0		µg/L	1	8/24/2009 1:39:00 PM
Tetrachloroethene	ND	2.0		µg/L	1	8/24/2009 1:39:00 PM
Dibromochloromethane	ND	2.0		µg/L	1	8/24/2009 1:39:00 PM
Chlorobenzene	ND	2.0		µg/L	1	8/24/2009 1:39:00 PM
Bromoform	ND	2.0		µg/L	1	8/24/2009 1:39:00 PM
1,1,2,2-Tetrachloroethane	ND	2.0		µg/L	1	8/24/2009 1:39:00 PM
1,3-Dichlorobenzene	ND	2.0		µg/L	1	8/24/2009 1:39:00 PM
1,4-Dichlorobenzene	ND	2.0		µg/L	1	8/24/2009 1:39:00 PM
1,2-Dichlorobenzene	ND	2.0		µg/L	1	8/24/2009 1:39:00 PM
Surr: Dibromofluoromethane	95.4	70-130		%REC	1	8/24/2009 1:39:00 PM
Surr: 1,2-Dichloroethane-d4	93.0	70-130		%REC	1	8/24/2009 1:39:00 PM
Surr: Toluene-d8	99.1	70-130		%REC	1	8/24/2009 1:39:00 PM
Surr: 4-Bromofluorobenzene	98.2	70-130		%REC	1	8/24/2009 1:39:00 PM

AMRO Environmental Laboratories Corp.

Date: *31-Aug-09*

CLIENT: ARCADIS U.S., Inc.
Work Order: 0908051
Project: MA000690 Crane

QC SUMMARY REPORT

Method Blank

Sample ID: **mb-08/24/09** Batch ID: **R43016** Test Code: **SW8260B** Units: **µg/L** Analysis Date: **8/24/2009 1:03:00 PM** Prep Date: **8/24/2009**

Client ID: Run ID: **V-3_090924A** SeqNo: **714561**

Analyte	QC Sample Result	RL	Units	QC Spike Amount	Original Sample Result	%REC	LowLimit	HighLimit	Original Sample or MS Result	%RPD	RPDLimit	Qua
Chloromethane	ND	5.0	µg/L									
Vinyl chloride	ND	2.0	µg/L									
Chloroethane	ND	5.0	µg/L									
Bromomethane	ND	2.0	µg/L									
1,1-Dichloroethene	ND	1.0	µg/L									
Methylene chloride	ND	5.0	µg/L									
trans-1,2-Dichloroethene	ND	2.0	µg/L									
1,1-Dichloroethane	ND	2.0	µg/L									
cis-1,2-Dichloroethene	ND	2.0	µg/L									
Chloroform	ND	2.0	µg/L									
1,1,1-Trichloroethane	ND	2.0	µg/L									
Carbon tetrachloride	ND	2.0	µg/L									
1,2-Dichloroethane	ND	2.0	µg/L									
Trichloroethene	ND	2.0	µg/L									
1,2-Dichloropropane	ND	2.0	µg/L									
Bromodichloromethane	ND	2.0	µg/L									
cis-1,3-Dichloropropene	ND	1.0	µg/L									
trans-1,3-Dichloropropene	ND	1.0	µg/L									
1,1,2-Trichloroethane	ND	2.0	µg/L									
Tetrachloroethene	ND	2.0	µg/L									
Dibromochloromethane	ND	2.0	µg/L									
Chlorobenzene	ND	2.0	µg/L									
Bromoform	ND	2.0	µg/L									
1,1,2,2-Tetrachloroethane	ND	2.0	µg/L									
1,3-Dichlorobenzene	ND	2.0	µg/L									

Qualifiers: ND - Not Detected at the Reporting Limit
J - Analyte detected below quantitation limits
S - Spike Recovery outside accepted recovery limits
R - RPD outside accepted recovery limits
B - Analyte detected in the associated Method Blank
NA - Not applicable where J values or ND results occur
RL - Reporting Limit; defined as the lowest concentration the laboratory can accurately quantitate.

CLIENT: ARCADIS U.S., Inc.
Work Order: 0908051
Project: MA000690 Crane

QC SUMMARY REPORT

Method Blank

1,4-Dichlorobenzene	ND	2.0	µg/L						
1,2-Dichlorobenzene	ND	2.0	µg/L						
Surr: Dibromofluoromethane	23.48	2.0	µg/L	25	0	93.9	70	130	0
Surr: 1,2-Dichloroethane-d4	23.57	2.0	µg/L	25	0	94.3	70	130	0
Surr: Toluene-d8	24.67	2.0	µg/L	25	0	98.7	70	130	0
Surr: 4-Bromofluorobenzene	24.95	2.0	µg/L	25	0	99.8	70	130	0

Qualifiers: ND - Not Detected at the Reporting Limit
J - Analyte detected below quantitation limits
RL - Reporting Limit; defined as the lowest concentration the laboratory can accurately quantitate.
S - Spike Recovery outside accepted recovery limits
R - RPD outside accepted recovery limits
B - Analyte detected in the associated Method Blank
NA - Not applicable where J values or ND results occur

AMRO Environmental Laboratories Corp.

Date: *31-Aug-09*

CLIENT: ARCADIS U.S., Inc.
Work Order: 0908051
Project: MA000690 Crane

QC SUMMARY REPORT

Method Blank

Sample ID: **mb-08/25/09** Batch ID: **R43024** Test Code: **SW8260B** Units: **µg/L** Analysis Date: **8/25/2009 12:36:00 PM** Prep Date: **8/25/2009**

Client ID: Run ID: **V-1_090825A** SeqNo: **714607**

Analyte	QC Sample Result	RL	Units	QC Spike Amount	Original Sample Result	%REC	LowLimit	HighLimit	Original Sample or MS Result	%RPD	RPDLimit	Qua
Chloromethane	ND	5.0	µg/L									
Vinyl chloride	ND	2.0	µg/L									
Chloroethane	ND	5.0	µg/L									
Bromomethane	ND	2.0	µg/L									
1,1-Dichloroethene	ND	1.0	µg/L									
Methylene chloride	ND	5.0	µg/L									
trans-1,2-Dichloroethene	ND	2.0	µg/L									
1,1-Dichloroethane	ND	2.0	µg/L									
cis-1,2-Dichloroethene	ND	2.0	µg/L									
Chloroform	ND	2.0	µg/L									
1,1,1-Trichloroethane	ND	2.0	µg/L									
Carbon tetrachloride	ND	2.0	µg/L									
1,2-Dichloroethane	ND	2.0	µg/L									
Trichloroethene	ND	2.0	µg/L									
1,2-Dichloropropane	ND	2.0	µg/L									
Bromodichloromethane	ND	2.0	µg/L									
cis-1,3-Dichloropropene	ND	1.0	µg/L									
trans-1,3-Dichloropropene	ND	1.0	µg/L									
1,1,2-Trichloroethane	ND	2.0	µg/L									
Tetrachloroethene	ND	2.0	µg/L									
Dibromochloromethane	ND	2.0	µg/L									
Chlorobenzene	ND	2.0	µg/L									
Bromoform	ND	2.0	µg/L									
1,1,2,2-Tetrachloroethane	ND	2.0	µg/L									
1,3-Dichlorobenzene	ND	2.0	µg/L									

Qualifiers: ND - Not Detected at the Reporting Limit
J - Analyte detected below quantitation limits
RL - Reporting Limit; defined as the lowest concentration the laboratory can accurately quantitate.
S - Spike Recovery outside accepted recovery limits
R - RPD outside accepted recovery limits
B - Analyte detected in the associated Method Blank
NA - Not applicable where J values or ND results occur

CLIENT: ARCADIS U.S., Inc.
Work Order: 0908051
Project: MA000690 Crane

QC SUMMARY REPORT

Method Blank

1,4-Dichlorobenzene	ND	2.0	µg/L						
1,2-Dichlorobenzene	ND	2.0	µg/L						
Surr: Dibromofluoromethane	26.33	2.0	µg/L	25	0	105	70	130	0
Surr: 1,2-Dichloroethane-d4	28.86	2.0	µg/L	25	0	115	70	130	0
Surr: Toluene-d8	24.51	2.0	µg/L	25	0	98	70	130	0
Surr: 4-Bromofluorobenzene	26.2	2.0	µg/L	25	0	105	70	130	0

Qualifiers: ND - Not Detected at the Reporting Limit
J - Analyte detected below quantitation limits
RL - Reporting Limit; defined as the lowest concentration the laboratory can accurately quantitate.
S - Spike Recovery outside accepted recovery limits
R - RPD outside accepted recovery limits
B - Analyte detected in the associated Method Blank
NA - Not applicable where J values or ND results occur

AMRO Environmental Laboratories Corp.

Date: *31-Aug-09*

CLIENT: ARCADIS U.S., Inc.
Work Order: 0908051
Project: MA000690 Crane

QC SUMMARY REPORT

Method Blank

Sample ID: **mb-08/27/09** Batch ID: **R43043** Test Code: **SW8260B** Units: **µg/L** Analysis Date: **8/27/2009 3:06:00 PM** Prep Date: **8/27/2009**

Client ID: Run ID: **V-3_090827A** SeqNo: **714782**

Analyte	QC Sample Result	RL	Units	QC Spike Amount	Original Sample Result	%REC	LowLimit	HighLimit	Original Sample or MS Result	%RPD	RPDLimit	Qua
Chloromethane	ND	5.0	µg/L									
Vinyl chloride	ND	2.0	µg/L									
Chloroethane	ND	5.0	µg/L									
Bromomethane	ND	2.0	µg/L									
1,1-Dichloroethene	ND	1.0	µg/L									
Methylene chloride	ND	5.0	µg/L									
trans-1,2-Dichloroethene	ND	2.0	µg/L									
1,1-Dichloroethane	ND	2.0	µg/L									
cis-1,2-Dichloroethene	ND	2.0	µg/L									
Chloroform	ND	2.0	µg/L									
1,1,1-Trichloroethane	ND	2.0	µg/L									
Carbon tetrachloride	ND	2.0	µg/L									
1,2-Dichloroethane	ND	2.0	µg/L									
Trichloroethene	ND	2.0	µg/L									
1,2-Dichloropropane	ND	2.0	µg/L									
Bromodichloromethane	ND	2.0	µg/L									
cis-1,3-Dichloropropene	ND	1.0	µg/L									
trans-1,3-Dichloropropene	ND	1.0	µg/L									
1,1,2-Trichloroethane	ND	2.0	µg/L									
Tetrachloroethene	ND	2.0	µg/L									
Dibromochloromethane	ND	2.0	µg/L									
Chlorobenzene	ND	2.0	µg/L									
Bromoform	ND	2.0	µg/L									
1,1,2,2-Tetrachloroethane	ND	2.0	µg/L									
1,3-Dichlorobenzene	ND	2.0	µg/L									

Qualifiers: ND - Not Detected at the Reporting Limit
J - Analyte detected below quantitation limits
RL - Reporting Limit; defined as the lowest concentration the laboratory can accurately quantitate.
S - Spike Recovery outside accepted recovery limits
R - RPD outside accepted recovery limits
B - Analyte detected in the associated Method Blank
NA - Not applicable where J values or ND results occur

AMRO Environmental Laboratories Corp.

Date: *31-Aug-09*

CLIENT: ARCADIS U.S., Inc.
Work Order: 0908051
Project: MA000690 Crane

QC SUMMARY REPORT

Method Blank

1,4-Dichlorobenzene	ND	2.0	µg/L						
1,2-Dichlorobenzene	ND	2.0	µg/L						
Surr: Dibromofluoromethane	23.36	2.0	µg/L	25	0	93.4	70	130	0
Surr: 1,2-Dichloroethane-d4	24.85	2.0	µg/L	25	0	99.4	70	130	0
Surr: Toluene-d8	22.85	2.0	µg/L	25	0	91.4	70	130	0
Surr: 4-Bromofluorobenzene	22.91	2.0	µg/L	25	0	91.6	70	130	0

Qualifiers: ND - Not Detected at the Reporting Limit
J - Analyte detected below quantitation limits
RL - Reporting Limit; defined as the lowest concentration the laboratory can accurately quantitate.
S - Spike Recovery outside accepted recovery limits
R - RPD outside accepted recovery limits
B - Analyte detected in the associated Method Blank
NA - Not applicable where J values or ND results occur

AMRO Environmental Laboratories Corp.

Date: *31-Aug-09*

CLIENT: ARCADIS U.S., Inc.
Work Order: 0908051
Project: MA000690 Crane

QC SUMMARY REPORT

Laboratory Control Spike - Full List

Sample ID: **lcs-08/24/09** Batch ID: **R43016** Test Code: **SW8260B** Units: **µg/L** Analysis Date: **8/24/2009 10:41:00 AM** Prep Date: **8/24/2009**

Client ID: Run ID: **V-3_090924A** SeqNo: **714563**

Analyte	QC Sample Result	RL	Units	QC Spike Amount	Original Sample Result	%REC	LowLimit	HighLimit	Original Sample or MS Result	%RPD	RPDLimit	Qua
Chloromethane	20.21	5.0	µg/L	20	0	101	70	130	0			
Vinyl chloride	21.01	2.0	µg/L	20	0	105	70	130	0			
Chloroethane	20.39	5.0	µg/L	20	0	102	70	130	0			
Bromomethane	19.02	2.0	µg/L	20	0	95.1	70	130	0			
1,1-Dichloroethene	21.62	1.0	µg/L	20	0	108	70	130	0			
Methylene chloride	19.29	5.0	µg/L	20	0	96.5	70	130	0			
trans-1,2-Dichloroethene	21.38	2.0	µg/L	20	0	107	70	130	0			
1,1-Dichloroethane	22	2.0	µg/L	20	0	110	70	130	0			
cis-1,2-Dichloroethene	23.2	2.0	µg/L	20	0	116	70	130	0			
Chloroform	20.03	2.0	µg/L	20	0	100	70	130	0			
1,1,1-Trichloroethane	21.76	2.0	µg/L	20	0	109	70	130	0			
Carbon tetrachloride	18.3	2.0	µg/L	20	0	91.5	70	130	0			
1,2-Dichloroethane	19.22	2.0	µg/L	20	0	96.1	70	130	0			
Trichloroethene	21.99	2.0	µg/L	20	0	110	70	130	0			
1,2-Dichloropropane	22.28	2.0	µg/L	20	0	111	70	130	0			
Bromodichloromethane	19.68	2.0	µg/L	20	0	98.4	70	130	0			
cis-1,3-Dichloropropene	20.77	1.0	µg/L	20	0	104	70	130	0			
trans-1,3-Dichloropropene	19.34	1.0	µg/L	20	0	96.7	70	130	0			
1,1,2-Trichloroethane	20.88	2.0	µg/L	20	0	104	70	130	0			
Tetrachloroethene	24.41	2.0	µg/L	20	0	122	70	130	0			
Dibromochloromethane	16.94	2.0	µg/L	20	0	84.7	70	130	0			
Chlorobenzene	20.4	2.0	µg/L	20	0	102	70	130	0			
Bromoform	16.44	2.0	µg/L	20	0	82.2	70	130	0			
1,1,2,2-Tetrachloroethane	19.92	2.0	µg/L	20	0	99.6	70	130	0			
1,3-Dichlorobenzene	21.89	2.0	µg/L	20	0	109	70	130	0			

Qualifiers: ND - Not Detected at the Reporting Limit; S - Spike Recovery outside accepted recovery limits; B - Analyte detected in the associated Method Blank; J - Analyte detected below quantitation limits; R - RPD outside accepted recovery limits; NA - Not applicable where J values or ND results occur; RL - Reporting Limit; defined as the lowest concentration the laboratory can accurately quantitate.

CLIENT: ARCADIS U.S., Inc.
Work Order: 0908051
Project: MA000690 Crane

QC SUMMARY REPORT

Laboratory Control Spike - Full List

1,4-Dichlorobenzene	20.7	2.0	µg/L	20	0	104	70	130	0
1,2-Dichlorobenzene	21.41	2.0	µg/L	20	0	107	70	130	0
Surr: Dibromofluoromethane	23.49	2.0	µg/L	25	0	94	70	130	0
Surr: 1,2-Dichloroethane-d4	22.31	2.0	µg/L	25	0	89.2	70	130	0
Surr: Toluene-d8	25.31	2.0	µg/L	25	0	101	70	130	0
Surr: 4-Bromofluorobenzene	24.89	2.0	µg/L	25	0	99.6	70	130	0

Qualifiers: ND - Not Detected at the Reporting Limit
J - Analyte detected below quantitation limits
S - Spike Recovery outside accepted recovery limits
R - RPD outside accepted recovery limits
B - Analyte detected in the associated Method Blank
NA - Not applicable where J values or ND results occur
RL - Reporting Limit; defined as the lowest concentration the laboratory can accurately quantitate.

AMRO Environmental Laboratories Corp.

Date: *31-Aug-09*

CLIENT: ARCADIS U.S., Inc.
Work Order: 0908051
Project: MA000690 Crane

QC SUMMARY REPORT

Laboratory Control Spike Duplicate - Full List

Sample ID: **lcsdf-08/24/09** Batch ID: **R43016** Test Code: **SW8260B** Units: **µg/L** Analysis Date: **8/24/2009 11:17:00 AM** Prep Date: **8/24/2009**

Client ID: Run ID: **V-3_090924A** SeqNo: **714564**

Analyte	QC Sample Result	RL	Units	QC Spike Amount	Original Sample Result	%REC	LowLimit	HighLimit	Original Sample or MS Result	%RPD	RPDLimit	Qua
Chloromethane	21.36	5.0	µg/L	20	0	107	70	130	20.21	5.53	20	
Vinyl chloride	21.26	2.0	µg/L	20	0	106	70	130	21.01	1.18	20	
Chloroethane	20.4	5.0	µg/L	20	0	102	70	130	20.39	0.049	20	
Bromomethane	18.78	2.0	µg/L	20	0	93.9	70	130	19.02	1.27	20	
1,1-Dichloroethene	21.35	1.0	µg/L	20	0	107	70	130	21.62	1.26	20	
Methylene chloride	19.63	5.0	µg/L	20	0	98.2	70	130	19.29	1.75	20	
trans-1,2-Dichloroethene	21.29	2.0	µg/L	20	0	106	70	130	21.38	0.422	20	
1,1-Dichloroethane	22.02	2.0	µg/L	20	0	110	70	130	22	0.0909	20	
cis-1,2-Dichloroethene	22.87	2.0	µg/L	20	0	114	70	130	23.2	1.43	20	
Chloroform	19.55	2.0	µg/L	20	0	97.8	70	130	20.03	2.43	20	
1,1,1-Trichloroethane	22.04	2.0	µg/L	20	0	110	70	130	21.76	1.28	20	
Carbon tetrachloride	18.27	2.0	µg/L	20	0	91.4	70	130	18.3	0.164	20	
1,2-Dichloroethane	18.55	2.0	µg/L	20	0	92.8	70	130	19.22	3.55	20	
Trichloroethene	21.77	2.0	µg/L	20	0	109	70	130	21.99	1.01	20	
1,2-Dichloropropane	22	2.0	µg/L	20	0	110	70	130	22.28	1.26	20	
Bromodichloromethane	19.29	2.0	µg/L	20	0	96.5	70	130	19.68	2	20	
cis-1,3-Dichloropropene	20.29	1.0	µg/L	20	0	101	70	130	20.77	2.34	20	
trans-1,3-Dichloropropene	18.33	1.0	µg/L	20	0	91.7	70	130	19.34	5.36	20	
1,1,2-Trichloroethane	20.01	2.0	µg/L	20	0	100	70	130	20.88	4.26	20	
Tetrachloroethene	24.17	2.0	µg/L	20	0	121	70	130	24.41	0.988	20	
Dibromochloromethane	16.02	2.0	µg/L	20	0	80.1	70	130	16.94	5.58	20	
Chlorobenzene	20.32	2.0	µg/L	20	0	102	70	130	20.4	0.393	20	
Bromoform	15.45	2.0	µg/L	20	0	77.2	70	130	16.44	6.21	20	
1,1,2,2-Tetrachloroethane	18.76	2.0	µg/L	20	0	93.8	70	130	19.92	6	20	
1,3-Dichlorobenzene	21.64	2.0	µg/L	20	0	108	70	130	21.89	1.15	20	

Qualifiers: ND - Not Detected at the Reporting Limit; S - Spike Recovery outside accepted recovery limits; B - Analyte detected in the associated Method Blank; J - Analyte detected below quantitation limits; R - RPD outside accepted recovery limits; NA - Not applicable where J values or ND results occur; RL - Reporting Limit; defined as the lowest concentration the laboratory can accurately quantitate.

CLIENT: ARCADIS U.S., Inc.
Work Order: 0908051
Project: MA000690 Crane

QC SUMMARY REPORT

Laboratory Control Spike Duplicate - Full List

1,4-Dichlorobenzene	20.42	2.0	µg/L	20	0	102	70	130	20.7	1.36	20
1,2-Dichlorobenzene	20.71	2.0	µg/L	20	0	104	70	130	21.41	3.32	20
Surr: Dibromofluoromethane	23.84	2.0	µg/L	25	0	95.4	70	130	0	0	0
Surr: 1,2-Dichloroethane-d4	21.27	2.0	µg/L	25	0	85.1	70	130	0	0	0
Surr: Toluene-d8	25.4	2.0	µg/L	25	0	102	70	130	0	0	0
Surr: 4-Bromofluorobenzene	26.16	2.0	µg/L	25	0	105	70	130	0	0	0

Qualifiers: ND - Not Detected at the Reporting Limit
J - Analyte detected below quantitation limits
RL - Reporting Limit; defined as the lowest concentration the laboratory can accurately quantitate.
S - Spike Recovery outside accepted recovery limits
R - RPD outside accepted recovery limits
B - Analyte detected in the associated Method Blank
NA - Not applicable where J values or ND results occur

AMRO Environmental Laboratories Corp.

Date: *31-Aug-09*

CLIENT: ARCADIS U.S., Inc.
Work Order: 0908051
Project: MA000690 Crane

QC SUMMARY REPORT

Laboratory Control Spike - Full List

Sample ID: **lcsf-08/25/09** Batch ID: **R43024** Test Code: **SW8260B** Units: **µg/L** Analysis Date: **8/25/2009 10:50:00 AM** Prep Date: **8/25/2009**

Client ID: Run ID: **V-1_090825A** SeqNo: **714611**

Analyte	QC Sample Result	RL	Units	QC Spike Amount	Original Sample Result	%REC	LowLimit	HighLimit	Original Sample or MS Result	%RPD	RPDLimit	Qua
Chloromethane	18.18	5.0	µg/L	20	0	90.9	70	130	0			
Vinyl chloride	17.48	2.0	µg/L	20	0	87.4	70	130	0			
Chloroethane	21.6	5.0	µg/L	20	0	108	70	130	0			
Bromomethane	18.97	2.0	µg/L	20	0	94.8	70	130	0			
1,1-Dichloroethene	21.79	1.0	µg/L	20	0	109	70	130	0			
Methylene chloride	21.12	5.0	µg/L	20	0	106	70	130	0			
trans-1,2-Dichloroethene	21.63	2.0	µg/L	20	0	108	70	130	0			
1,1-Dichloroethane	23.15	2.0	µg/L	20	0	116	70	130	0			
cis-1,2-Dichloroethene	23.16	2.0	µg/L	20	0	116	70	130	0			
Chloroform	22.54	2.0	µg/L	20	0	113	70	130	0			
1,1,1-Trichloroethane	24.47	2.0	µg/L	20	0	122	70	130	0			
Carbon tetrachloride	22.6	2.0	µg/L	20	0	113	70	130	0			
1,2-Dichloroethane	23.55	2.0	µg/L	20	0	118	70	130	0			
Trichloroethene	22.52	2.0	µg/L	20	0	113	70	130	0			
1,2-Dichloropropane	20.32	2.0	µg/L	20	0	102	70	130	0			
Bromodichloromethane	20.38	2.0	µg/L	20	0	102	70	130	0			
cis-1,3-Dichloropropene	18.62	1.0	µg/L	20	0	93.1	70	130	0			
trans-1,3-Dichloropropene	21.19	1.0	µg/L	20	0	106	70	130	0			
1,1,2-Trichloroethane	19.66	2.0	µg/L	20	0	98.3	70	130	0			
Tetrachloroethene	22.62	2.0	µg/L	20	0	113	70	130	0			
Dibromochloromethane	18.45	2.0	µg/L	20	0	92.2	70	130	0			
Chlorobenzene	20.37	2.0	µg/L	20	0	102	70	130	0			
Bromoform	17.62	2.0	µg/L	20	0	88.1	70	130	0			
1,1,2,2-Tetrachloroethane	22.02	2.0	µg/L	20	0	110	70	130	0			
1,3-Dichlorobenzene	22.02	2.0	µg/L	20	0	110	70	130	0			

Qualifiers: ND - Not Detected at the Reporting Limit; S - Spike Recovery outside accepted recovery limits; B - Analyte detected in the associated Method Blank; J - Analyte detected below quantitation limits; R - RPD outside accepted recovery limits; NA - Not applicable where J values or ND results occur; RL - Reporting Limit: defined as the lowest concentration the laboratory can accurately quantitate.

CLIENT: ARCADIS U.S., Inc.
Work Order: 0908051
Project: MA000690 Crane

QC SUMMARY REPORT

Laboratory Control Spike - Full List

1,4-Dichlorobenzene	21.36	2.0	µg/L	20	0	107	70	130	0
1,2-Dichlorobenzene	20.75	2.0	µg/L	20	0	104	70	130	0
Surr: Dibromofluoromethane	26.78	2.0	µg/L	25	0	107	70	130	0
Surr: 1,2-Dichloroethane-d4	28.33	2.0	µg/L	25	0	113	70	130	0
Surr: Toluene-d8	25.79	2.0	µg/L	25	0	103	70	130	0
Surr: 4-Bromofluorobenzene	24.69	2.0	µg/L	25	0	98.8	70	130	0

Qualifiers: ND - Not Detected at the Reporting Limit
J - Analyte detected below quantitation limits
S - Spike Recovery outside accepted recovery limits
R - RPD outside accepted recovery limits
B - Analyte detected in the associated Method Blank
NA - Not applicable where J values or ND results occur
RL - Reporting Limit; defined as the lowest concentration the laboratory can accurately quantitate.

AMRO Environmental Laboratories Corp.

Date: *31-Aug-09*

CLIENT: ARCADIS U.S., Inc.
Work Order: 0908051
Project: MA000690 Crane

QC SUMMARY REPORT

Laboratory Control Spike Duplicate - Full List

Sample ID: **lcsdf-08/25/09** Batch ID: **R43024** Test Code: **SW8260B** Units: **µg/L** Analysis Date: **8/25/2009 11:25:00 AM** Prep Date: **8/25/2009**

Client ID: Run ID: **V-1_090825A** SeqNo: **714612**

Analyte	QC Sample Result	RL	Units	QC Spike Amount	Original Sample Result	%REC	LowLimit	HighLimit	Original Sample or MS Result	%RPD	RPDLimit	Qua
Chloromethane	17.64	5.0	µg/L	20	0	88.2	70	130	18.18	3.02	20	
Vinyl chloride	18.18	2.0	µg/L	20	0	90.9	70	130	17.48	3.93	20	
Chloroethane	20.99	5.0	µg/L	20	0	105	70	130	21.6	2.86	20	
Bromomethane	18.7	2.0	µg/L	20	0	93.5	70	130	18.97	1.43	20	
1,1-Dichloroethene	22.05	1.0	µg/L	20	0	110	70	130	21.79	1.19	20	
Methylene chloride	20.95	5.0	µg/L	20	0	105	70	130	21.12	0.808	20	
trans-1,2-Dichloroethene	21.97	2.0	µg/L	20	0	110	70	130	21.63	1.56	20	
1,1-Dichloroethane	22.58	2.0	µg/L	20	0	113	70	130	23.15	2.49	20	
cis-1,2-Dichloroethene	22.18	2.0	µg/L	20	0	111	70	130	23.16	4.32	20	
Chloroform	23.13	2.0	µg/L	20	0	116	70	130	22.54	2.58	20	
1,1,1-Trichloroethane	24.27	2.0	µg/L	20	0	121	70	130	24.47	0.821	20	
Carbon tetrachloride	21.71	2.0	µg/L	20	0	109	70	130	22.6	4.02	20	
1,2-Dichloroethane	22.92	2.0	µg/L	20	0	115	70	130	23.55	2.71	20	
Trichloroethene	21.59	2.0	µg/L	20	0	108	70	130	22.52	4.22	20	
1,2-Dichloropropane	19.82	2.0	µg/L	20	0	99.1	70	130	20.32	2.49	20	
Bromodichloromethane	19.21	2.0	µg/L	20	0	96	70	130	20.38	5.91	20	
cis-1,3-Dichloropropene	17.88	1.0	µg/L	20	0	89.4	70	130	18.62	4.05	20	
trans-1,3-Dichloropropene	20.27	1.0	µg/L	20	0	101	70	130	21.19	4.44	20	
1,1,2-Trichloroethane	19.28	2.0	µg/L	20	0	96.4	70	130	19.66	1.95	20	
Tetrachloroethene	23.65	2.0	µg/L	20	0	118	70	130	22.62	4.45	20	
Dibromochloromethane	18.93	2.0	µg/L	20	0	94.6	70	130	18.45	2.57	20	
Chlorobenzene	21.09	2.0	µg/L	20	0	105	70	130	20.37	3.47	20	
Bromoform	18.22	2.0	µg/L	20	0	91.1	70	130	17.62	3.35	20	
1,1,2,2-Tetrachloroethane	22.86	2.0	µg/L	20	0	114	70	130	22.02	3.74	20	
1,3-Dichlorobenzene	22.57	2.0	µg/L	20	0	113	70	130	22.02	2.47	20	

Qualifiers: ND - Not Detected at the Reporting Limit; S - Spike Recovery outside accepted recovery limits; B - Analyte detected in the associated Method Blank; J - Analyte detected below quantitation limits; R - RPD outside accepted recovery limits; NA - Not applicable where J values or ND results occur; RL - Reporting Limit; defined as the lowest concentration the laboratory can accurately quantitate.

CLIENT: ARCADIS U.S., Inc.
Work Order: 0908051
Project: MA000690 Crane

QC SUMMARY REPORT

Laboratory Control Spike Duplicate - Full List

1,4-Dichlorobenzene	21.43	2.0	µg/L	20	0	107	70	130	21.36	0.327	20
1,2-Dichlorobenzene	21.51	2.0	µg/L	20	0	108	70	130	20.75	3.6	20
Surr: Dibromofluoromethane	27.14	2.0	µg/L	25	0	109	70	130	0	0	0
Surr: 1,2-Dichloroethane-d4	28.72	2.0	µg/L	25	0	115	70	130	0	0	0
Surr: Toluene-d8	24.64	2.0	µg/L	25	0	98.6	70	130	0	0	0
Surr: 4-Bromofluorobenzene	25.69	2.0	µg/L	25	0	103	70	130	0	0	0

Qualifiers: ND - Not Detected at the Reporting Limit
J - Analyte detected below quantitation limits
S - Spike Recovery outside accepted recovery limits
R - RPD outside accepted recovery limits
B - Analyte detected in the associated Method Blank
NA - Not applicable where J values or ND results occur
RL - Reporting Limit; defined as the lowest concentration the laboratory can accurately quantitate.

AMRO Environmental Laboratories Corp.

Date: *31-Aug-09*

CLIENT: ARCADIS U.S., Inc.
Work Order: 0908051
Project: MA000690 Crane

QC SUMMARY REPORT

Laboratory Control Spike - Full List

Sample ID: **Ics-08/27/09** Batch ID: **R43043** Test Code: **SW8260B** Units: **µg/L** Analysis Date: **8/27/2009 1:12:00 PM** Prep Date: **8/27/2009**

Client ID: Run ID: **V-3_090827A** SeqNo: **714784**

Analyte	QC Sample Result	RL	Units	QC Spike Amount	Original Sample Result	%REC	LowLimit	HighLimit	Original Sample or MS Result	%RPD	RPDLimit	Qua
Chloromethane	17.39	5.0	µg/L	20	0	87	70	130	0			
Vinyl chloride	17.82	2.0	µg/L	20	0	89.1	70	130	0			
Chloroethane	17.54	5.0	µg/L	20	0	87.7	70	130	0			
Bromomethane	17.54	2.0	µg/L	20	0	87.7	70	130	0			
1,1-Dichloroethene	18.81	1.0	µg/L	20	0	94.1	70	130	0			
Methylene chloride	21.26	5.0	µg/L	20	0	106	70	130	0			
trans-1,2-Dichloroethene	19.07	2.0	µg/L	20	0	95.4	70	130	0			
1,1-Dichloroethane	20.79	2.0	µg/L	20	0	104	70	130	0			
cis-1,2-Dichloroethene	21.06	2.0	µg/L	20	0	105	70	130	0			
Chloroform	18.89	2.0	µg/L	20	0	94.4	70	130	0			
1,1,1-Trichloroethane	21.05	2.0	µg/L	20	0	105	70	130	0			
Carbon tetrachloride	17.32	2.0	µg/L	20	0	86.6	70	130	0			
1,2-Dichloroethane	19.75	2.0	µg/L	20	0	98.8	70	130	0			
Trichloroethene	19.26	2.0	µg/L	20	0	96.3	70	130	0			
1,2-Dichloropropane	20.95	2.0	µg/L	20	0	105	70	130	0			
Bromodichloromethane	18.44	2.0	µg/L	20	0	92.2	70	130	0			
cis-1,3-Dichloropropene	19.02	1.0	µg/L	20	0	95.1	70	130	0			
trans-1,3-Dichloropropene	17.83	1.0	µg/L	20	0	89.2	70	130	0			
1,1,2-Trichloroethane	20.06	2.0	µg/L	20	0	100	70	130	0			
Tetrachloroethene	21.21	2.0	µg/L	20	0	106	70	130	0			
Dibromochloromethane	17.27	2.0	µg/L	20	0	86.4	70	130	0			
Chlorobenzene	20.21	2.0	µg/L	20	0	101	70	130	0			
Bromoform	16.54	2.0	µg/L	20	0	82.7	70	130	0			
1,1,2,2-Tetrachloroethane	25.2	2.0	µg/L	20	0	126	70	130	0			
1,3-Dichlorobenzene	21.38	2.0	µg/L	20	0	107	70	130	0			

Qualifiers: ND - Not Detected at the Reporting Limit; S - Spike Recovery outside accepted recovery limits; B - Analyte detected in the associated Method Blank
J - Analyte detected below quantitation limits; R - RPD outside accepted recovery limits; NA - Not applicable where J values or ND results occur
RL - Reporting Limit; defined as the lowest concentration the laboratory can accurately quantitate.

CLIENT: ARCADIS U.S., Inc.
Work Order: 0908051
Project: MA000690 Crane

QC SUMMARY REPORT

Laboratory Control Spike - Full List

1,4-Dichlorobenzene	21.05	2.0	µg/L	20	0	105	70	130	0
1,2-Dichlorobenzene	21.58	2.0	µg/L	20	0	108	70	130	0
Surr: Dibromofluoromethane	23.28	2.0	µg/L	25	0	93.1	70	130	0
Surr: 1,2-Dichloroethane-d4	24.33	2.0	µg/L	25	0	97.3	70	130	0
Surr: Toluene-d8	23.48	2.0	µg/L	25	0	93.9	70	130	0
Surr: 4-Bromofluorobenzene	24.1	2.0	µg/L	25	0	96.4	70	130	0

Qualifiers: ND - Not Detected at the Reporting Limit
J - Analyte detected below quantitation limits
RL - Reporting Limit; defined as the lowest concentration the laboratory can accurately quantitate.
S - Spike Recovery outside accepted recovery limits
R - RPD outside accepted recovery limits
B - Analyte detected in the associated Method Blank
NA - Not applicable where J values or ND results occur

AMRO Environmental Laboratories Corp.

Date: *31-Aug-09*

CLIENT: ARCADIS U.S., Inc.
Work Order: 0908051
Project: MA000690 Crane

QC SUMMARY REPORT

Laboratory Control Spike Duplicate - Full List

Sample ID: **Icsdf-08/27/09** Batch ID: **R43043** Test Code: **SW8260B** Units: **µg/L** Analysis Date: **8/27/2009 1:55:00 PM** Prep Date: **8/27/2009**

Client ID: Run ID: **V-3_090827A** SeqNo: **714835**

Analyte	QC Sample Result	RL	Units	QC Spike Amount	Original Sample Result	%REC	LowLimit	HighLimit	Original Sample or MS Result	%RPD	RPDLimit	Qua
Chloromethane	18.69	5.0	µg/L	20	0	93.4	70	130	17.39	7.21	20	
Vinyl chloride	18.8	2.0	µg/L	20	0	94	70	130	17.82	5.35	20	
Chloroethane	19.14	5.0	µg/L	20	0	95.7	70	130	17.54	8.72	20	
Bromomethane	18.66	2.0	µg/L	20	0	93.3	70	130	17.54	6.19	20	
1,1-Dichloroethene	19.98	1.0	µg/L	20	0	99.9	70	130	18.81	6.03	20	
Methylene chloride	21.55	5.0	µg/L	20	0	108	70	130	21.26	1.35	20	
trans-1,2-Dichloroethene	19.67	2.0	µg/L	20	0	98.4	70	130	19.07	3.1	20	
1,1-Dichloroethane	21.5	2.0	µg/L	20	0	108	70	130	20.79	3.36	20	
cis-1,2-Dichloroethene	21	2.0	µg/L	20	0	105	70	130	21.06	0.285	20	
Chloroform	19.29	2.0	µg/L	20	0	96.5	70	130	18.89	2.1	20	
1,1,1-Trichloroethane	22.16	2.0	µg/L	20	0	111	70	130	21.05	5.14	20	
Carbon tetrachloride	18.02	2.0	µg/L	20	0	90.1	70	130	17.32	3.96	20	
1,2-Dichloroethane	19.69	2.0	µg/L	20	0	98.4	70	130	19.75	0.304	20	
Trichloroethene	19.11	2.0	µg/L	20	0	95.6	70	130	19.26	0.782	20	
1,2-Dichloropropane	21.06	2.0	µg/L	20	0	105	70	130	20.95	0.524	20	
Bromodichloromethane	18.46	2.0	µg/L	20	0	92.3	70	130	18.44	0.108	20	
cis-1,3-Dichloropropene	18.59	1.0	µg/L	20	0	93	70	130	19.02	2.29	20	
trans-1,3-Dichloropropene	17.15	1.0	µg/L	20	0	85.8	70	130	17.83	3.89	20	
1,1,2-Trichloroethane	19.04	2.0	µg/L	20	0	95.2	70	130	20.06	5.22	20	
Tetrachloroethene	21.51	2.0	µg/L	20	0	108	70	130	21.21	1.4	20	
Dibromochloromethane	17.37	2.0	µg/L	20	0	86.8	70	130	17.27	0.577	20	
Chlorobenzene	20.37	2.0	µg/L	20	0	102	70	130	20.21	0.789	20	
Bromoform	15.32	2.0	µg/L	20	0	76.6	70	130	16.54	7.66	20	
1,1,2,2-Tetrachloroethane	22.38	2.0	µg/L	20	0	112	70	130	25.2	11.9	20	
1,3-Dichlorobenzene	21.27	2.0	µg/L	20	0	106	70	130	21.38	0.516	20	

Qualifiers: ND - Not Detected at the Reporting Limit; S - Spike Recovery outside accepted recovery limits; B - Analyte detected in the associated Method Blank; J - Analyte detected below quantitation limits; R - RPD outside accepted recovery limits; NA - Not applicable where J values or ND results occur; RL - Reporting Limit; defined as the lowest concentration the laboratory can accurately quantitate.

CLIENT: ARCADIS U.S., Inc.
Work Order: 0908051
Project: MA000690 Crane

QC SUMMARY REPORT

Laboratory Control Spike Duplicate - Full List

1,4-Dichlorobenzene	20.93	2.0	µg/L	20	0	105	70	130	21.05	0.572	20
1,2-Dichlorobenzene	21.71	2.0	µg/L	20	0	109	70	130	21.58	0.601	20
Surr: Dibromofluoromethane	23.4	2.0	µg/L	25	0	93.6	70	130	0	0	0
Surr: 1,2-Dichloroethane-d4	23.92	2.0	µg/L	25	0	95.7	70	130	0	0	0
Surr: Toluene-d8	23.24	2.0	µg/L	25	0	93	70	130	0	0	0
Surr: 4-Bromofluorobenzene	24.29	2.0	µg/L	25	0	97.2	70	130	0	0	0

Qualifiers: ND - Not Detected at the Reporting Limit
J - Analyte detected below quantitation limits
S - Spike Recovery outside accepted recovery limits
R - RPD outside accepted recovery limits
B - Analyte detected in the associated Method Blank
NA - Not applicable where J values or ND results occur
RL - Reporting Limit; defined as the lowest concentration the laboratory can accurately quantitate.

AMRO Environmental Laboratories Corporation

111 Herrick Street, Merrimack, NH 03054
TEL: (603) 424-2022 • FAX: (603) 429-8496
www.amrolabs.com

April 19, 2010

ANALYTICAL TEST RESULTS

Chuck Castelluccio
ARCADIS U.S., Inc.
2 Executive Drive
Suite 303
Chelmsford, MA 01824
TEL: 978-937-9999
FAX: (978) 937-7555

Subject: MA000690 Crane

Workorder No.: 1004033

Dear Chuck Castelluccio:

AMRO Environmental Laboratories Corp. received 5 samples on 4/9/2010 for the analyses presented in the following report.

AMRO is accredited in accordance with NELAC and certifies that these test results meet all the requirements of NELAC, where applicable, unless otherwise noted in the case narrative.

The enclosed Sample Receipt Checklist details the condition of your sample(s) upon receipt. Please be advised that any unused sample volume and sample extracts will be stored for a period of 60 days from sample receipt date (90 days for samples from New York). After this time, AMRO will properly dispose of the remaining sample(s). If you require further analysis, or need the samples held for a longer period, please contact us immediately.

This report consists of a total of 22 pages. This letter is an integral part of your data report. All results in this project relate only to the sample(s) as received by the laboratory and documented in the Chain-of-Custody. This report shall not be reproduced except in full, without the written approval of the laboratory. If you have any questions regarding this project in the future, please refer to the Workorder Number above.

Sincerely,

Nancy Stewart
Vice President

State Certifications: NH (NELAC): 1001, MA: M-NH012, CT: PH-0758, NY: 11278 (NELAC), ME: NH012 and 1001, NJ: NH125, RI: 00105, U.S. Army Corps of Engineers (USACE), Naval Facilities Engineering Service Center (NFESC).

Hard copy of the State Certification is available upon request.

AMRO Environmental Laboratories Corp.

Date: *19-Apr-10*

CLIENT: ARCADIS U.S., Inc.
Project: MA000690 Crane
Lab Order: 1004033
Date Received: 4/9/2010

Work Order Sample Summary

Lab Sample ID	Client Sample ID	Collection Date	Collection Time
1004033-01A	Influent	4/8/2010	12:30 PM
1004033-02A	Effluent	4/8/2010	12:45 PM
1004033-03A	IW-1 80'	4/8/2010	3:00 PM
1004033-04A	TB	4/8/2010	12:00 AM
1004033-05A	GT-115 new 80'	4/8/2010	2:00 PM

AMRO Environmental Laboratories Corp.

19-Apr-10

Lab Order: 1004033
Client: ARCADIS U.S., Inc.
Project: MA000690 Crane

DATES REPORT

Sample ID	Client Sample ID	Collection Date	Matrix	Analytical Test Name / Preparatory Test Name	Prep Date	Analysis Date / Batch ID	TCLP Date
1004033-01A	Influent	4/8/2010 12:30:00 PM	Groundwater	EPA 8260B HALOGENATED VOCs by GC/MS		4/14/2010	
				EPA 5030B	4/8/2010	R44400	
1004033-02A	Effluent	4/8/2010 12:45:00 PM		EPA 8260B HALOGENATED VOCs by GC/MS		4/14/2010	
					4/8/2010	R44400	
1004033-03A	IW-1 80'	4/8/2010 3:00:00 PM		EPA 8260B HALOGENATED VOCs by GC/MS		4/16/2010	
					4/8/2010	R44409	
1004033-04A	TB	4/8/2010		EPA 8260B HALOGENATED VOCs by GC/MS		4/14/2010	
					4/8/2010	R44400	
1004033-05A	GT-115 new 80'	4/8/2010 2:00:00 PM		EPA 8260B HALOGENATED VOCs by GC/MS		4/17/2010	
					4/8/2010	R44411	
				EPA 8260B HALOGENATED VOCs by GC/MS		4/16/2010	
					4/8/2010	R44409	

ARCADIS

Laboratory Task Order No./P.O. No. 1004033

CHAIN-OF-CUSTODY RECORD

Project Number/Name MA000690 CRANE

Project Location WEYMOUTH, MA

Laboratory AMRO

Project Manager C. CASTELLUCCIO

Sampler(s)/Affiliation GEO

ANALYSIS / METHOD / SIZE

Sample ID/Location	Matrix	Date/Time Sampled	Lab ID	VOC abbreviated list						Remarks	Total
Influent	GW	4.8.10 1230		X						contact Brian	2
Effluent	GW	1245		X						T. for details.	2
IW-1 80'	GW	1500		X							2
GT-115 new 80'	GW	1400		X						← Hold	2
TRIP BLANK				X							1

Sample Matrix: L = Liquid; S = Solid; A = Air

Total No. of Bottles/Containers 9

Relinquished by: [signature]	Organization:	Date 4/9/10	Time 1600	Seal Intact?	
Received by: [signature]	Organization: Amro	Date 4/9/10	Time 1600	Yes No N/A	
Relinquished by: [signature]	Organization: Amro	Date 4/9/10	Time 1645	Seal Intact?	
Received by: [signature]	Organization:	Date 4/9/10	Time 1645	Yes No N/A	

Special Instructions/Remarks:

Delivery Method: ☒ In Person ☐ Common Carrier (SPECIFY) ☒ Lab Courier ☐ Other (SPECIFY)

AG 05-12/01

4

Mirta Ghiraldi

From: Castelluccio, Chuck [Chuck.Castelluccio@arcadis-us.com]
Sent: Monday, April 12, 2010 2:36 PM
To: Mirta Ghiraldi
Cc: Therriault, Brian; Heaphy, Brian
Subject: Crane

Please proceed with analyzing the sample for GT-115 we had on hold. The short list of CVOCs.
Thank you

Charles Castelluccio | Principal Scientist | chuck.castelluccio@arcadis-us.com
ARCADIS U.S., Inc. | Two Executive Drive, Suite 303 | Chelmsford, MA, 01824
T. 978.937.9999 ext 316 | C. 978.505.1123 | F. 978.937.7555
www.arcadis-us.com
Licensed Site Professional/Licensed Environmental Professional
ARCADIS, Imagine the result
Please consider the environment before printing this email.

NOTICE: This e-mail and any files transmitted with it are the property of ARCADIS U.S., Inc. and its affiliates. All rights, including without limitation copyright, are reserved. The proprietary information contained in this e-mail message, and any files transmitted with it, is intended for the use of the recipient(s) named above. If the reader of this e-mail is not the intended recipient, you are hereby notified that you have received this e-mail in error and that any review, distribution or copying of this e-mail or any files transmitted with it is strictly prohibited. If you have received this e-mail in error, please notify the sender immediately and delete the original message and any files transmitted. The unauthorized use of this e-mail or any files transmitted with it is prohibited and disclaimed by ARCADIS U.S., Inc. and its affiliates. Nothing herein is intended to constitute the offering or performance of services where otherwise restricted by law.

AMRO Environmental Laboratories Corporation

SAMPLE RECEIPT CHECKLIST

111 Herrick Street
Merrimack, NH 03054
(603) 424-2022

Client: ARCADIS
Project Name: MA000690 CRAZE
Ship via: (circle one) Fed Ex., UPS, AMRO Courier, Hand Del., Other Courier, Other:

AMRO ID: 1009033
Date Rec.: 4-9-10
Date Due: 4-16-10

Items to be Checked Upon Receipt	Yes	No	NA	Comments
1. Army Samples received in individual plastic bags?			✓	
2. Custody Seals present?			✓	
3. Custody Seals intact?			✓	
4. Air Bill included in folder if received?			✓	
5. Is COC included with samples?	✓			
6. Is COC signed and dated by client?	✓			
7. Laboratory receipt temperature. TEMP = 3°				
Samples rec. with ice ✓ ice packs___ neither___				
8. Were samples received the same day they were sampled?		✓		
Is client temperature = or <6°C ?	✓			
If no obtain authorization from the client for the analyses.				
Client authorization from: Date: Obtained by:				
9. Is the COC filled out correctly and completely?	✓			
10. Does the info on the COC match the samples?	✓			
11. Were samples rec. within holding time?	✓			
12. Were all samples properly labeled?	✓			
13. Were all samples properly preserved?	✓			
14. Were proper sample containers used?	✓			
15. Were all samples received intact? (none broken or leaking)	✓			
16. Were VOA vials rec. with no air bubbles?	✓			
17. Were the sample volumes sufficient for requested analysis?	✓			
18. Were all samples received?	✓			
19. VPH and VOA Soils only:			✓	
Sampling Method VPH (circle one): M=Methanol, E=EnCore (air-tight container)				
Sampling Method VOA (circle one): M=Methanol, SB=Sodium Bisulfate, E=EnCore, B=Bulk				
If M or SB:				
Does preservative cover the soil?				
If NO then client must be faxed.				
Does preservation level come close to the fill line on the vial?				
If NO then client must be faxed.				
Were vials provided by AMRO?				
If NO then weights MUST be obtained from client				
Was dry weight aliquot provided?				
If NO then fax client and inform the VOA lab ASAP.				
20. Subcontracted Samples:			✓	
What samples sent:				
Where sent:				
Date:				
Analysis:				
TAT:				
21. Information entered into:				
Internal Tracking Log?	✓			
Dry Weight Log?			✓	
Client Log?			✓	
Composite Log?			✓	
Filtration Log?			✓	

Received By: MG Date: 4-9-10 Logged in By: MG Date: 4-12-10
Labeled By: MG Date: 4-12-10 Checked By: [illegible] Date: 4-12-10

NA= Not Applicable

Laboratories Corporation

Merrimack, NH 03054
(603) 424-2022

Please Circle if:
Sample= Soil
Sample= Waste

AMRO ID: _____

Sample ID	Analysis	Volume Sample	Preserv. Listed	Initial pH*	Acceptable? Y or N	List Preserv. Added by AMRO	Solution ID # of Preserv.	Volume Preservative Added	Final adjusted pH	Final adjusted pH (after 16 or 24 hours)
01A→03A	VOC	2-40mL	HCL	—	—					
04A (TB)	VOC	1-40mL	HCL	—	—					

** = if the laboratory preserves the drinking water sample (s) for EPA Method 200 series, sample (s) should be held at least 16 hours prior to analysis or 24 hours for water sample (s).*

pH Checked By: _____ Date: _____ pH adjusted By: _____ Date: _____

pH Checked By: _____ Date: _____ pH adj.(16 or 24hrs)By: _____ Date: _____

qc/qcmemos/forms/samplerec Rev.19 04/20/09

AMRO Environmental Laboratories Corp. **Date:** *19-Apr-10*

CLIENT: ARCADIS U.S., Inc.
Project: MA000690 Crane
Lab Order: 1004033

CASE NARRATIVE

GC/MS VOLATILES:

1. No QC deviations were observed.

2. A short list of halogenated compounds were reported by client request.

MADEP MCP Analytical Method Report Certification Form

Laboratory Name: AMRO Environmental Laboratories, Inc. Project Number: 1004033

Project Location: MA000690 Crane MADEP RTN [1]

1004033-01	1004033-02	1004033-03	1004033-04	1004033-05		

Sample Matrices: Ground Water ✓ Soil / Sediment ☐ Drinking Water ☐ OtherMatrix ☐

MCP SW-846 Methods Used					
	8260B ✓	8151A ☐	8330 ☐	6010B ☐	7470A/1A ☐
	8270C ☐	8081A ☐	VPH ☐	6020 ☐	9014M [2] ☐
As specified in MADEP Compendium of Analytical Methods. (check all that apply)	8082 ☐	8021B ☐	EPH ☐	7000S [3] ☐	Other ☐

1 List Release Tracking Number (RTN) if known
2 M - SW-846 Method 9014 or MADEP Physiologically Available Cyanide (PAC) Method
3 S SW-846 Methods 7000 Series List individual method analyte.

An affirmative response to questions A, B, C and D is required for "Presumptive Certainty" status

A	Were all samples received by the laboratory in a condition consistent with that described on the Chain of Custody documentation for the data set?	● Yes ○ No [1]
B	Were all QA/QC procedures required for the specified analytical method(s)included in this report followed, including the requirement to note and discuss in a narrative QC data that did not meet appropriate performance standards or guide lines?	● Yes ○ No [1]
C	Does the analytical data included in this report meet all the requirements for Presumptive Certainty, as described in Section 2.0 of the MADEP document CAM VII A, Quality Assurance and Quality Control Guidelines for the Acquisition and Reporting of Analytical Data?	● Yes ○ No [1]
D	**VPH and EPH methods only:** Was the VPH or EPH method run without significant modifications, as specified in Section 11.3?	~~○ Yes ● No~~ [1] N/A 4/19/10

A response to questions E and F below is required for "Presumptive Certainty" status

E	Were all QC performance standards and recommendations for the specified methods achieved?	● Yes ○ No [1]
F	Were results for all analyte-list compounds / elements for the specified method(s) reported?	○ Yes ● No [1]

[1] All NO answers must be addressed in an attached Environmental Laboratory case narrative.

I, the undersigned, attest under the pains and penalties of perjury that, based upon my personal inqury of those responsible for obtaining the information, the material contained in this analytical report is, to the best of my knowledge and belief, accurate and complete.

Signature: [signature] Position: Vice Pres.

Printed Name: Nancy Stewart Date: 4-19-10

DATA COMMENT PAGE

Organic Data Qualifiers

ND	Indicates compound was analyzed for, but not detected at or above the reporting limit.
J	Indicates an estimated value. This flag is used either when estimating a concentration for tentatively identified compounds where a 1:1 response is assumed, or when the data indicates the presence of a compound that meets the identification criteria but the result is less than the sample quantitation limit but greater than the method detection limit.
H	Method prescribed holding time exceeded.
E	This flag identifies compounds whose concentrations exceed the calibration range of the instrument for that specific analysis.
B	This flag is used when the analyte is found in the associated blank as well as in the sample.
R	RPD outside accepted recovery limits
RL	Reporting limit; defined as the lowest concentration the laboratory can accurately quantitate.
S	Spike Recovery outside accepted recovery limits.
#	See Case Narrative

Micro Data Qualifiers

TNTC	Too numerous to count

Inorganic Data Qualifiers

ND or U	Indicates element was analyzed for, but not detected at or above the reporting limit.
J	Indicates a value greater than or equal to the method detection limit, but less than the quantitation limit.
H	Indicates analytical holding time exceedance.
B	Indicates that the analyte is found in the associated blank, as well as in the sample.
MSA	Indicates value determined by the Method of Standard Addition
E	This flag identifies compounds whose concentrations exceed the calibration range of the instrument for that specific analysis.
R	RPD outside accepted recovery limits
RL	Reporting limit; defined as the lowest concentration the laboratory can accurately quantitate.
S	Spike Recovery outside accepted recovery limits.
W	Post-digestion spike for Furnace AA analysis is out of control limits (85-115), while sample absorbance is less than 50% of spike absorbance.
*	Duplicate analysis not within control limits.
+	Indicates the correlation coefficient for the Method of Standard Addition is less than 0.995
#	See Case Narrative

Report Comments:

1. Soil, sediment and sludge sample results are reported on a "dry weight" basis.
2. Reporting limits are adjusted for sample size used, dilutions and moisture content, if applicable.

AMRO Environmental Laboratories Corp.

Date: *19-Apr-10*

CLIENT: ARCADIS U.S., Inc.
Project: MA000690 Crane
Lab Order: 1004033

Lab ID: 1004033-01
Collection Date: 4/8/2010 12:30:00 PM
Collection Time:
Client Sample ID: Influent
Matrix: GROUNDWATER

Analyses	Result	RL	Qual	Units	DF	Date Analyzed
EPA 8260B HALOGENATED VOLATILES BY GC/M SW8260B						Analyst: **AL**
Vinyl chloride	2.2	2.0		µg/L	1	4/14/2010 2:29:00 PM
1,1-Dichloroethene	2.4	1.0		µg/L	1	4/14/2010 2:29:00 PM
trans-1,2-Dichloroethene	ND	2.0		µg/L	1	4/14/2010 2:29:00 PM
1,1-Dichloroethane	6.5	2.0		µg/L	1	4/14/2010 2:29:00 PM
cis-1,2-Dichloroethene	160	2.0		µg/L	1	4/14/2010 2:29:00 PM
1,1,1-Trichloroethane	ND	2.0		µg/L	1	4/14/2010 2:29:00 PM
Trichloroethene	82	2.0		µg/L	1	4/14/2010 2:29:00 PM
Tetrachloroethene	ND	2.0		µg/L	1	4/14/2010 2:29:00 PM
Surr: Dibromofluoromethane	102	70-130		%REC	1	4/14/2010 2:29:00 PM
Surr: 1,2-Dichloroethane-d4	103	70-130		%REC	1	4/14/2010 2:29:00 PM
Surr: Toluene-d8	99.5	70-130		%REC	1	4/14/2010 2:29:00 PM
Surr: 4-Bromofluorobenzene	92.7	70-130		%REC	1	4/14/2010 2:29:00 PM

Lab ID: 1004033-02
Collection Date: 4/8/2010 12:45:00 PM
Collection Time:
Client Sample ID: Effluent
Matrix: GROUNDWATER

Analyses	Result	RL	Qual	Units	DF	Date Analyzed
EPA 8260B HALOGENATED VOLATILES BY GC/M SW8260B						Analyst: **AL**
Vinyl chloride	ND	2.0		µg/L	1	4/14/2010 1:55:00 PM
1,1-Dichloroethene	ND	1.0		µg/L	1	4/14/2010 1:55:00 PM
trans-1,2-Dichloroethene	ND	2.0		µg/L	1	4/14/2010 1:55:00 PM
1,1-Dichloroethane	ND	2.0		µg/L	1	4/14/2010 1:55:00 PM
cis-1,2-Dichloroethene	ND	2.0		µg/L	1	4/14/2010 1:55:00 PM
1,1,1-Trichloroethane	ND	2.0		µg/L	1	4/14/2010 1:55:00 PM
Trichloroethene	ND	2.0		µg/L	1	4/14/2010 1:55:00 PM
Tetrachloroethene	ND	2.0		µg/L	1	4/14/2010 1:55:00 PM
Surr: Dibromofluoromethane	102	70-130		%REC	1	4/14/2010 1:55:00 PM
Surr: 1,2-Dichloroethane-d4	103	70-130		%REC	1	4/14/2010 1:55:00 PM
Surr: Toluene-d8	99.8	70-130		%REC	1	4/14/2010 1:55:00 PM
Surr: 4-Bromofluorobenzene	98.4	70-130		%REC	1	4/14/2010 1:55:00 PM

AMRO Environmental Laboratories Corp.

Date: *19-Apr-10*

CLIENT: ARCADIS U.S., Inc.
Project: MA000690 Crane
Lab Order: 1004033

Lab ID: 1004033-03
Collection Date: 4/8/2010 3:00:00 PM
Collection Time:
Client Sample ID: IW-1 80'
Matrix: GROUNDWATER

Analyses	Result	RL	Qual	Units	DF	Date Analyzed
EPA 8260B HALOGENATED VOLATILES BY GC/M SW8260B						Analyst: AL
Vinyl chloride	ND	2.0		µg/L	1	4/16/2010 5:33:00 PM
1,1-Dichloroethene	ND	1.0		µg/L	1	4/16/2010 5:33:00 PM
trans-1,2-Dichloroethene	ND	2.0		µg/L	1	4/16/2010 5:33:00 PM
1,1-Dichloroethane	ND	2.0		µg/L	1	4/16/2010 5:33:00 PM
cis-1,2-Dichloroethene	ND	2.0		µg/L	1	4/16/2010 5:33:00 PM
1,1,1-Trichloroethane	ND	2.0		µg/L	1	4/16/2010 5:33:00 PM
Trichloroethene	3.1	2.0		µg/L	1	4/16/2010 5:33:00 PM
Tetrachloroethene	ND	2.0		µg/L	1	4/16/2010 5:33:00 PM
Surr: Dibromofluoromethane	109	70-130		%REC	1	4/16/2010 5:33:00 PM
Surr: 1,2-Dichloroethane-d4	98.1	70-130		%REC	1	4/16/2010 5:33:00 PM
Surr: Toluene-d8	103	70-130		%REC	1	4/16/2010 5:33:00 PM
Surr: 4-Bromofluorobenzene	92.7	70-130		%REC	1	4/16/2010 5:33:00 PM

Lab ID: 1004033-04
Collection Date: 4/8/2010
Collection Time:
Client Sample ID: TB
Matrix: GROUNDWATER

Analyses	Result	RL	Qual	Units	DF	Date Analyzed
EPA 8260B HALOGENATED VOLATILES BY GC/M SW8260B						Analyst: AL
Vinyl chloride	ND	2.0		µg/L	1	4/14/2010 1:20:00 PM
1,1-Dichloroethene	ND	1.0		µg/L	1	4/14/2010 1:20:00 PM
trans-1,2-Dichloroethene	ND	2.0		µg/L	1	4/14/2010 1:20:00 PM
1,1-Dichloroethane	ND	2.0		µg/L	1	4/14/2010 1:20:00 PM
cis-1,2-Dichloroethene	ND	2.0		µg/L	1	4/14/2010 1:20:00 PM
1,1,1-Trichloroethane	ND	2.0		µg/L	1	4/14/2010 1:20:00 PM
Trichloroethene	ND	2.0		µg/L	1	4/14/2010 1:20:00 PM
Tetrachloroethene	ND	2.0		µg/L	1	4/14/2010 1:20:00 PM
Surr: Dibromofluoromethane	101	70-130		%REC	1	4/14/2010 1:20:00 PM
Surr: 1,2-Dichloroethane-d4	100	70-130		%REC	1	4/14/2010 1:20:00 PM
Surr: Toluene-d8	99.6	70-130		%REC	1	4/14/2010 1:20:00 PM
Surr: 4-Bromofluorobenzene	96.8	70-130		%REC	1	4/14/2010 1:20:00 PM

AMRO Environmental Laboratories Corp.

Date: *19-Apr-10*

CLIENT: ARCADIS U.S., Inc.
Project: MA000690 Crane

Lab Order: 1004033

Lab ID: 1004033-05

Collection Date: 4/8/2010 2:00:00 PM
Collection Time:

Client Sample ID: GT-115 new 80'

Matrix: GROUNDWATER

Analyses	Result	RL	Qual	Units	DF	Date Analyzed
EPA 8260B HALOGENATED VOLATILES BY GC/M SW8260B						Analyst: AL
Vinyl chloride	ND	2.0		µg/L	1	4/16/2010 4:59:00 PM
1,1-Dichloroethene	1.5	1.0		µg/L	1	4/16/2010 4:59:00 PM
trans-1,2-Dichloroethene	ND	2.0		µg/L	1	4/16/2010 4:59:00 PM
1,1-Dichloroethane	3.0	2.0		µg/L	1	4/16/2010 4:59:00 PM
cis-1,2-Dichloroethene	130	2.0		µg/L	1	4/16/2010 4:59:00 PM
1,1,1-Trichloroethane	23	2.0		µg/L	1	4/16/2010 4:59:00 PM
Trichloroethene	300	20		µg/L	10	4/17/2010 4:32:00 PM
Tetrachloroethene	ND	2.0		µg/L	1	4/16/2010 4:59:00 PM
Surr: Dibromofluoromethane	112	70-130		%REC	1	4/16/2010 4:59:00 PM
Surr: 1,2-Dichloroethane-d4	98.1	70-130		%REC	1	4/16/2010 4:59:00 PM
Surr: Toluene-d8	101	70-130		%REC	1	4/16/2010 4:59:00 PM
Surr: 4-Bromofluorobenzene	91.7	70-130		%REC	1	4/16/2010 4:59:00 PM

AMRO Environmental Laboratories Corp.

Date: *19-Apr-10*

CLIENT: ARCADIS U.S., Inc.
Work Order: 1004033
Project: MA000690 Crane

QC SUMMARY REPORT

Method Blank

Sample ID: **mb-04/14/10** Batch ID: **R44400** Test Code: **SW8260B** Units: **µg/L** Analysis Date: **4/14/2010 12:11:00 PM** Prep Date: **4/14/2010**

Client ID: Run ID: **V-3_100414A** SeqNo: **735989**

Analyte	QC Sample Result	RL	Units	QC Spike Amount	Original Sample Result	%REC	LowLimit	HighLimit	Original Sample or MS Result	%RPD	RPDLimit	Qua
Vinyl chloride	ND	2.0	µg/L									
1,1-Dichloroethene	ND	1.0	µg/L									
trans-1,2-Dichloroethene	ND	2.0	µg/L									
1,1-Dichloroethane	ND	2.0	µg/L									
cis-1,2-Dichloroethene	ND	2.0	µg/L									
1,1,1-Trichloroethane	ND	2.0	µg/L									
Trichloroethene	ND	2.0	µg/L									
Tetrachloroethene	ND	2.0	µg/L									
Surr: Dibromofluoromethane	25.41	2.0	µg/L	25	0	102	70	130	0			
Surr: 1,2-Dichloroethane-d4	24.51	2.0	µg/L	25	0	98	70	130	0			
Surr: Toluene-d8	25.35	2.0	µg/L	25	0	101	70	130	0			
Surr: 4-Bromofluorobenzene	24.29	2.0	µg/L	25	0	97.2	70	130	0			

Qualifiers: ND - Not Detected at the Reporting Limit
J - Analyte detected below quantitation limits
RL - Reporting Limit; defined as the lowest concentration the laboratory can accurately quantitate.
S - Spike Recovery outside accepted recovery limits
R - RPD outside accepted recovery limits
B - Analyte detected in the associated Method Blank
NA - Not applicable where J values or ND results occur

AMRO Environmental Laboratories Corp.

Date: *19-Apr-10*

CLIENT: ARCADIS U.S., Inc.
Work Order: 1004033
Project: MA000690 Crane

QC SUMMARY REPORT

Method Blank

Sample ID **mb-04/16/10** Batch ID: **R44409** Test Code: **SW8260B** Units: **µg/L** Analysis Date **4/16/10 10:41:00 AM** Prep Date **4/16/10**

Client ID: Run ID: **V-3_100416A** SeqNo: **736180**

Analyte	QC Sample Result	RL	Units	QC Spike Amount	Original Sample Result	%REC	LowLimit	HighLimit	Original Sample or MS Result	%RPD	RPDLimit	Qua
Vinyl chloride	ND	2.0	µg/L									
1,1-Dichloroethene	ND	1.0	µg/L									
trans-1,2-Dichloroethene	ND	2.0	µg/L									
1,1-Dichloroethane	ND	2.0	µg/L									
cis-1,2-Dichloroethene	ND	2.0	µg/L									
1,1,1-Trichloroethane	ND	2.0	µg/L									
Trichloroethene	ND	2.0	µg/L									
Tetrachloroethene	ND	2.0	µg/L									
Surr: Dibromofluoromethane	25.78	2.0	µg/L	25	0	103	70	130	0			
Surr: 1,2-Dichloroethane-d4	25.05	2.0	µg/L	25	0	100	70	130	0			
Surr: Toluene-d8	25.5	2.0	µg/L	25	0	102	70	130	0			
Surr: 4-Bromofluorobenzene	23.96	2.0	µg/L	25	0	95.8	70	130	0			

Qualifiers: ND - Not Detected at the Reporting Limit
J - Analyte detected below quantitation limits
S - Spike Recovery outside accepted recovery limits
R - RPD outside accepted recovery limits
B - Analyte detected in the associated Method Blank
NA - Not applicable where J values or ND results occur
RL - Reporting Limit; defined as the lowest concentration the laboratory can accurately quantitate.

AMRO Environmental Laboratories Corp.

Date: *19-Apr-10*

CLIENT: ARCADIS U.S., Inc.
Work Order: 1004033
Project: MA000690 Crane

QC SUMMARY REPORT

Method Blank

Sample ID **mb-04/17/10** Batch ID: **R44411** Test Code: **SW8260B** Units: **µg/L** Analysis Date **4/17/10 3:58:00 PM** Prep Date **4/17/10**

Client ID: Run ID: **V-3_100417A** SeqNo: **736307**

Analyte	QC Sample Result	RL	Units	QC Spike Amount	Original Sample Result	%REC	LowLimit	HighLimit	Original Sample or MS Result	%RPD	RPDLimit	Qua
Vinyl chloride	ND	2.0	µg/L									
1,1-Dichloroethene	ND	1.0	µg/L									
trans-1,2-Dichloroethene	ND	2.0	µg/L									
1,1-Dichloroethane	ND	2.0	µg/L									
cis-1,2-Dichloroethene	ND	2.0	µg/L									
1,1,1-Trichloroethane	ND	2.0	µg/L									
Trichloroethene	ND	2.0	µg/L									
Tetrachloroethene	ND	2.0	µg/L									
Surr: Dibromofluoromethane	24.99	2.0	µg/L	25	0	100	70	130	0			
Surr: 1,2-Dichloroethane-d4	22.72	2.0	µg/L	25	0	90.9	70	130	0			
Surr: Toluene-d8	23	2.0	µg/L	25	0	92	70	130	0			
Surr: 4-Bromofluorobenzene	22.48	2.0	µg/L	25	0	89.9	70	130	0			

Qualifiers: ND - Not Detected at the Reporting Limit
J - Analyte detected below quantitation limits
S - Spike Recovery outside accepted recovery limits
R - RPD outside accepted recovery limits
B - Analyte detected in the associated Method Blank
NA - Not applicable where J values or ND results occur
RL - Reporting Limit; defined as the lowest concentration the laboratory can accurately quantitate.

AMRO Environmental Laboratories Corp.

Date: *19-Apr-10*

CLIENT: ARCADIS U.S., Inc.
Work Order: 1004033
Project: MA000690 Crane

QC SUMMARY REPORT

Laboratory Control Spike - Full List

Sample ID: **lcs-04/14/10** Batch ID: **R44400** Test Code: **SW8260B** Units: **µg/L** Analysis Date: **4/14/2010 9:54:00 AM** Prep Date: **4/14/2010**

Client ID: Run ID: **V-3_100414A** SeqNo: **735991**

Analyte	QC Sample Result	RL	Units	QC Spike Amount	Original Sample Result	%REC	LowLimit	HighLimit	Original Sample or MS Result	%RPD	RPDLimit	Qua
Vinyl chloride	18.32	2.0	µg/L	20	0	91.6	70	130	0			
1,1-Dichloroethene	19.7	1.0	µg/L	20	0	98.5	70	130	0			
trans-1,2-Dichloroethene	18.08	2.0	µg/L	20	0	90.4	70	130	0			
1,1-Dichloroethane	19.36	2.0	µg/L	20	0	96.8	70	130	0			
cis-1,2-Dichloroethene	19.3	2.0	µg/L	20	0	96.5	70	130	0			
1,1,1-Trichloroethane	20.6	2.0	µg/L	20	0	103	70	130	0			
Trichloroethene	18.38	2.0	µg/L	20	0	91.9	70	130	0			
Tetrachloroethene	17.58	2.0	µg/L	20	0	87.9	70	130	0			
Surr: Dibromofluoromethane	24.51	2.0	µg/L	25	0	98	70	130	0			
Surr: 1,2-Dichloroethane-d4	24.02	2.0	µg/L	25	0	96.1	70	130	0			
Surr: Toluene-d8	25.73	2.0	µg/L	25	0	103	70	130	0			
Surr: 4-Bromofluorobenzene	24.6	2.0	µg/L	25	0	98.4	70	130	0			

Qualifiers: ND - Not Detected at the Reporting Limit
J - Analyte detected below quantitation limits
S - Spike Recovery outside accepted recovery limits
R - RPD outside accepted recovery limits
B - Analyte detected in the associated Method Blank
NA - Not applicable where J values or ND results occur
RL - Reporting Limit; defined as the lowest concentration the laboratory can accurately quantitate.

AMRO Environmental Laboratories Corp.

Date: *19-Apr-10*

CLIENT: ARCADIS U.S., Inc.
Work Order: 1004033
Project: MA000690 Crane

QC SUMMARY REPORT

Laboratory Control Spike Duplicate - Full List

Sample ID: **lcsd-04/14/10** Batch ID: **R44400** Test Code: **SW8260B** Units: **µg/L** Analysis Date: **4/14/2010 10:28:00 AM** Prep Date: **4/14/2010**

Client ID: Run ID: **V-3_100414A** SeqNo: **735990**

Analyte	QC Sample Result	RL	Units	QC Spike Amount	Original Sample Result	%REC	LowLimit	HighLimit	Original Sample or MS Result	%RPD	RPDLimit	Qua
Vinyl chloride	22.08	2.0	µg/L	20	0	110	70	130	18.32	18.6	20	
1,1-Dichloroethene	23.52	1.0	µg/L	20	0	118	70	130	19.7	17.7	20	
trans-1,2-Dichloroethene	21.6	2.0	µg/L	20	0	108	70	130	18.08	17.7	20	
1,1-Dichloroethane	22.36	2.0	µg/L	20	0	112	70	130	19.36	14.4	20	
cis-1,2-Dichloroethene	22.11	2.0	µg/L	20	0	111	70	130	19.3	13.6	20	
1,1,1-Trichloroethane	23.59	2.0	µg/L	20	0	118	70	130	20.6	13.5	20	
Trichloroethene	21.6	2.0	µg/L	20	0	108	70	130	18.38	16.1	20	
Tetrachloroethene	20.36	2.0	µg/L	20	0	102	70	130	17.58	14.7	20	
Surr: Dibromofluoromethane	24.21	2.0	µg/L	25	0	96.8	70	130	0	0	0	
Surr: 1,2-Dichloroethane-d4	24.04	2.0	µg/L	25	0	96.2	70	130	0	0	0	
Surr: Toluene-d8	25.78	2.0	µg/L	25	0	103	70	130	0	0	0	
Surr: 4-Bromofluorobenzene	24.87	2.0	µg/L	25	0	99.5	70	130	0	0	0	

Qualifiers: ND - Not Detected at the Reporting Limit; S - Spike Recovery outside accepted recovery limits; B - Analyte detected in the associated Method Blank; J - Analyte detected below quantitation limits; R - RPD outside accepted recovery limits; NA - Not applicable where J values or ND results occur; RL - Reporting Limit; defined as the lowest concentration the laboratory can accurately quantitate.

AMRO Environmental Laboratories Corp.

Date: *19-Apr-10*

CLIENT: ARCADIS U.S., Inc.
Work Order: 1004033
Project: MA000690 Crane

QC SUMMARY REPORT

Laboratory Control Spike - Full List

Sample ID **lcs-04/16/10** Batch ID: **R44409** Test Code: **SW8260B** Units: **µg/L** Analysis Date **4/16/10 8:24:00 AM** Prep Date **4/16/10**

Client ID: Run ID: **V-3_100416A** SeqNo: **736182**

Analyte	QC Sample Result	RL	Units	QC Spike Amount	Original Sample Result	%REC	LowLimit	HighLimit	Original Sample or MS Result	%RPD	RPDLimit	Qua
Vinyl chloride	22.43	2.0	µg/L	20	0	112	70	130	0			
1,1-Dichloroethene	24.62	1.0	µg/L	20	0	123	70	130	0			
trans-1,2-Dichloroethene	21.93	2.0	µg/L	20	0	110	70	130	0			
1,1-Dichloroethane	23.72	2.0	µg/L	20	0	119	70	130	0			
cis-1,2-Dichloroethene	23.19	2.0	µg/L	20	0	116	70	130	0			
1,1,1-Trichloroethane	23.71	2.0	µg/L	20	0	119	70	130	0			
Trichloroethene	21.77	2.0	µg/L	20	0	109	70	130	0			
Tetrachloroethene	20.55	2.0	µg/L	20	0	103	70	130	0			
Surr: Dibromofluoromethane	26.66	2.0	µg/L	25	0	107	70	130	0			
Surr: 1,2-Dichloroethane-d4	24.51	2.0	µg/L	25	0	98	70	130	0			
Surr: Toluene-d8	26.62	2.0	µg/L	25	0	106	70	130	0			
Surr: 4-Bromofluorobenzene	24.59	2.0	µg/L	25	0	98.4	70	130	0			

Qualifiers: ND - Not Detected at the Reporting Limit
J - Analyte detected below quantitation limits
RL - Reporting Limit; defined as the lowest concentration the laboratory can accurately quantitate.
S - Spike Recovery outside accepted recovery limits
R - RPD outside accepted recovery limits
B - Analyte detected in the associated Method Blank
NA - Not applicable where J values or ND results occur

AMRO Environmental Laboratories Corp.

Date: *19-Apr-10*

CLIENT: ARCADIS U.S., Inc.
Work Order: 1004033
Project: MA000690 Crane

QC SUMMARY REPORT

Laboratory Control Spike Duplicate - Full List

Sample ID **lcsd-04/16/10** Batch ID: **R44409** Test Code: **SW8260B** Units: **µg/L** Analysis Date **4/16/10 8:58:00 AM** Prep Date **4/16/10**

Client ID: Run ID: **V-3_100416A** SeqNo: **736181**

Analyte	QC Sample Result	RL	Units	QC Spike Amount	Original Sample Result	%REC	LowLimit	HighLimit	Original Sample or MS Result	%RPD	RPDLimit	Qua
Vinyl chloride	22.9	2.0	µg/L	20	0	114	70	130	22.43	2.07	20	
1,1-Dichloroethene	24.73	1.0	µg/L	20	0	124	70	130	24.62	0.446	20	
trans-1,2-Dichloroethene	22.88	2.0	µg/L	20	0	114	70	130	21.93	4.24	20	
1,1-Dichloroethane	23.7	2.0	µg/L	20	0	118	70	130	23.72	0.0844	20	
cis-1,2-Dichloroethene	24.4	2.0	µg/L	20	0	122	70	130	23.19	5.09	20	
1,1,1-Trichloroethane	24.73	2.0	µg/L	20	0	124	70	130	23.71	4.21	20	
Trichloroethene	22.33	2.0	µg/L	20	0	112	70	130	21.77	2.54	20	
Tetrachloroethene	20.83	2.0	µg/L	20	0	104	70	130	20.55	1.35	20	
Surr: Dibromofluoromethane	24.63	2.0	µg/L	25	0	98.5	70	130	0	0	0	
Surr: 1,2-Dichloroethane-d4	24.21	2.0	µg/L	25	0	96.8	70	130	0	0	0	
Surr: Toluene-d8	26.08	2.0	µg/L	25	0	104	70	130	0	0	0	
Surr: 4-Bromofluorobenzene	24.41	2.0	µg/L	25	0	97.6	70	130	0	0	0	

Qualifiers: ND - Not Detected at the Reporting Limit
S - Spike Recovery outside accepted recovery limits
B - Analyte detected in the associated Method Blank
J - Analyte detected below quantitation limits
R - RPD outside accepted recovery limits
NA - Not applicable where J values or ND results occur
RL - Reporting Limit; defined as the lowest concentration the laboratory can accurately quantitate.

AMRO Environmental Laboratories Corp.

Date: *19-Apr-10*

CLIENT: ARCADIS U.S., Inc.
Work Order: 1004033
Project: MA000690 Crane

QC SUMMARY REPORT

Laboratory Control Spike - Full List

Sample ID **lcs-04/17/10** Batch ID: **R44411** Test Code: **SW8260B** Units: **µg/L** Analysis Date **4/17/10 1:41:00 PM** Prep Date **4/17/10**

Client ID: Run ID: **V-3_100417A** SeqNo: **736309**

Analyte	QC Sample Result	RL	Units	QC Spike Amount	Original Sample Result	%REC	LowLimit	HighLimit	Original Sample or MS Result	%RPD	RPDLimit	Qua
Vinyl chloride	20.74	2.0	µg/L	20	0	104	70	130	0			
1,1-Dichloroethene	23.59	1.0	µg/L	20	0	118	70	130	0			
trans-1,2-Dichloroethene	21.27	2.0	µg/L	20	0	106	70	130	0			
1,1-Dichloroethane	22.64	2.0	µg/L	20	0	113	70	130	0			
cis-1,2-Dichloroethene	21.77	2.0	µg/L	20	0	109	70	130	0			
1,1,1-Trichloroethane	23.19	2.0	µg/L	20	0	116	70	130	0			
Trichloroethene	20.61	2.0	µg/L	20	0	103	70	130	0			
Tetrachloroethene	22.06	2.0	µg/L	20	0	110	70	130	0			
Surr: Dibromofluoromethane	25.74	2.0	µg/L	25	0	103	70	130	0			
Surr: 1,2-Dichloroethane-d4	23.1	2.0	µg/L	25	0	92.4	70	130	0			
Surr: Toluene-d8	23.95	2.0	µg/L	25	0	95.8	70	130	0			
Surr: 4-Bromofluorobenzene	23.23	2.0	µg/L	25	0	92.9	70	130	0			

Qualifiers: ND - Not Detected at the Reporting Limit
S - Spike Recovery outside accepted recovery limits
B - Analyte detected in the associated Method Blank
J - Analyte detected below quantitation limits
R - RPD outside accepted recovery limits
NA - Not applicable where J values or ND results occur
RL - Reporting Limit; defined as the lowest concentration the laboratory can accurately quantitate.

AMRO Environmental Laboratories Corp.

Date: *19-Apr-10*

CLIENT: ARCADIS U.S., Inc.
Work Order: 1004033
Project: MA000690 Crane

QC SUMMARY REPORT

Laboratory Control Spike Duplicate - Full List

Sample ID **lcsd-04/17/10** Batch ID: **R44411** Test Code: **SW8260B** Units: **µg/L** Analysis Date **4/17/10 2:15:00 PM** Prep Date **4/17/10**

Client ID: Run ID: **V-3_100417A** SeqNo: **736308**

Analyte	QC Sample Result	RL	Units	QC Spike Amount	Original Sample Result	%REC	LowLimit	HighLimit	Original Sample or MS Result	%RPD	RPDLimit	Qua
Vinyl chloride	21.08	2.0	µg/L	20	0	105	70	130	20.74	1.63	20	
1,1-Dichloroethene	24.34	1.0	µg/L	20	0	122	70	130	23.59	3.13	20	
trans-1,2-Dichloroethene	21.61	2.0	µg/L	20	0	108	70	130	21.27	1.59	20	
1,1-Dichloroethane	22.72	2.0	µg/L	20	0	114	70	130	22.64	0.353	20	
cis-1,2-Dichloroethene	22.47	2.0	µg/L	20	0	112	70	130	21.77	3.16	20	
1,1,1-Trichloroethane	23.72	2.0	µg/L	20	0	119	70	130	23.19	2.26	20	
Trichloroethene	21.22	2.0	µg/L	20	0	106	70	130	20.61	2.92	20	
Tetrachloroethene	21.82	2.0	µg/L	20	0	109	70	130	22.06	1.09	20	
Surr: Dibromofluoromethane	24.54	2.0	µg/L	25	0	98.2	70	130	0	0	0	
Surr: 1,2-Dichloroethane-d4	22.73	2.0	µg/L	25	0	90.9	70	130	0	0	0	
Surr: Toluene-d8	24.28	2.0	µg/L	25	0	97.1	70	130	0	0	0	
Surr: 4-Bromofluorobenzene	22.81	2.0	µg/L	25	0	91.2	70	130	0	0	0	

Qualifiers: ND - Not Detected at the Reporting Limit; S - Spike Recovery outside accepted recovery limits; B - Analyte detected in the associated Method Blank; J - Analyte detected below quantitation limits; R - RPD outside accepted recovery limits; NA - Not applicable where J values or ND results occur; RL - Reporting Limit; defined as the lowest concentration the laboratory can accurately quantitate.

AMRO Environmental Laboratories Corporation

111 Herrick Street, Merrimack, NH 03054
TEL: (603) 424-2022 • FAX: (603) 429-8496
www.amrolabs.com

November 30, 2010

ANALYTICAL TEST RESULTS

Chuck Castelluccio
ARCADIS U.S., Inc.
2 Executive Drive
Suite 303
Chelmsford, MA 01824
TEL: 978-937-9999
FAX: (978) 937-7555

Subject: MA000690.0010.00005 Crane Weymouth MA Workorder No.: 1011055

Dear Chuck Castelluccio:

AMRO Environmental Laboratories Corp. received 2 samples on 11/16/2010 for the analyses presented in the following report.

AMRO is accredited in accordance with NELAC and certifies that these test results meet all the requirements of NELAC, where applicable, unless otherwise noted in the case narrative.

The enclosed Sample Receipt Checklist details the condition of your sample(s) upon receipt. Please be advised that any unused sample volume and sample extracts will be stored for a period of 60 days from sample receipt date (90 days for samples from New York). After this time, AMRO will properly dispose of the remaining sample(s). If you require further analysis, or need the samples held for a longer period, please contact us immediately.

This report consists of a total of 42 pages. This letter is an integral part of your data report. All results in this project relate only to the sample(s) as received by the laboratory and documented in the Chain-of-Custody. This report shall not be reproduced except in full, without the written approval of the laboratory. If you have any questions regarding this project in the future, please refer to the Workorder Number above.

Sincerely,

Nancy Stewart
Vice President

State Certifications: NH (NELAC): 1001, MA: M-NH012, CT: PH-0758, NY: 11278 (NELAC), ME: NH012 and 1001.

Hard copy of the State Certification is available upon request.

AMRO Environmental Laboratories Corp.

Date: *24-Nov-10*

CLIENT: ARCADIS U.S., Inc.
Project: MA000690.0010.00005 Crane Weymouth MA
Lab Order: 1011055
Date Received: 11/16/2010

Work Order Sample Summary

Lab Sample ID	Client Sample ID	Collection Date	Collection Time
1011055-01A	Influent	11/16/2010	10:50 AM
1011055-01B	Influent	11/16/2010	10:50 AM
1011055-01C	Influent	11/16/2010	10:50 AM
1011055-01D	Influent	11/16/2010	10:50 AM
1011055-01E	Influent	11/16/2010	10:50 AM
1011055-02A	Trip Blank	11/16/2010	12:00 AM

AMRO Environmental Laboratories Corp.

24-Nov-10

Lab Order: 1011055
Client: ARCADIS U.S., Inc.
Project: MA000690.0010.00005 Crane We

DATES REPORT

Sample ID	Client Sample ID	Collection Date	Matrix	Analytical Test Name / Preparatory Test Name	Prep Date	Analysis Date / Batch ID	TCLP Date
1011055-01A	Influent	11/16/2010 10:50:00 AM	Aqueous	MCP VOCs 8260B, EPA 5030B		11/19/2010	
				EPA 5030B	11/16/2010	R45797	
1011055-01B				EPA 8270C SEMIVOLATILE ORGANICS, Aqueous		11/23/2010	
				EPA 3510 AQPREP SEP FUNNEL: BNA	11/19/2010	20830	
				MCP SVOCs 8270C, EPA 3510		11/19/2010	
					11/19/2010	20830	
1011055-01C				EPA 8082 PCBS IN WATER		11/19/2010	
				EPA 3510 AQPREP SEP FUNNEL: PCB	11/18/2010	20829	
1011055-01D				EPA 200.7 ICP METALS, TOTAL		11/22/2010	
				200 Series Prep: ICP/GFAA	11/17/2010	20826	
1011055-01E				TPH, EPA 1664		11/18/2010	
						R45793	
1011055-02A	Trip Blank	11/16/2010		MCP VOCs 8260B, EPA 5030B		11/19/2010	
				EPA 5030B	11/16/2010	R45797	

ARCADIS
infrastructure, environment, buildings

ID#:

CHAIN OF CUSTODY & LABORATORY ANALYSIS REQUEST FORM

Page 1 of 1

Lab Work Order # 1011059

Send Results to:

Contact & Company Name: Arcadis	Telephone: 9789379999
Address: 2 Executive Dr #303	Fax: 978 937 7555
City: Chelmsford State: MA Zip: 01824	~~E-mail Address:~~ PM Chuck Castellucci0
Project Name/Location (City, State): Crane Weymouth MA	Project #: MA000690.0010.00005
Sampler's Printed Name: Diane Champagne	Sampler's Signature: Diane Champagne

Preservative	B	E	E	C	A		
Filtered (✓)							
# of Containers	2	2	2	1	2		
Container Information	1	2	2	4	2		

PARAMETER ANALYSIS & METHOD

Keys

Preservation Key:
A. H_2SO_4
B. HCL
C. HNO_3
D. NaOH
E. None
F. Other: _____
G. Other: _____
H. Other: _____

Container Information Key:
1. 40 ml Vial
2. 1 L Amber
3. 250 ml Plastic
4. 500 ml Plastic
5. Encore
6. 2 oz. Glass
7. 4 oz. Glass
8. 8 oz. Glass
9. Other: _____
10. Other: _____

Matrix Key:
SO - Soil, SE - Sediment, NL - NAPL/Oil, W - Water, SL - Sludge, SW - Sample Wipe, T - Tissue, A - Air, Other: _____

Sample ID	Collection Date	Collection Time	Type (✓) Comp	Type (✓) Grab	Matrix	VOC 8260b	SVOC 8270C+SIM	PCB's 8082	Iron 200.7	TPH 1664				REMARKS
Influent	11-16-10	1050		✓	W	2	2	2	1	2				
Trip Blank	—	—	—	—	W	1								

Special Instructions/Comments:
See Attached sheet for additional information

☐ Special QA/QC Instructions(✓):

Laboratory Information and Receipt		Relinquished By	Received By	Relinquished By	Laboratory Received By
Lab Name: AMRO	Cooler Custody Seal (✓)	Printed Name: Diane Champagne	Printed Name: William Davison	Printed Name: William Davison	Printed Name: [illegible]
☐ Cooler packed with ice (✓)	☐ Intact ☐ Not Intact	Signature: Diane Champagne	Signature: [illegible]	Signature: [illegible]	Signature: [illegible]
Specify Turnaround Requirements:	Sample Receipt:	Firm: Arcadis	Firm/Courier: AMRO	Firm/Courier: AMRO	Firm: AMRO
Shipping Tracking #:	Condition/Cooler Temp: _____	Date/Time: 11-16-10 1110	Date/Time: 11-16-10 1110	Date/Time: 11-16-10 1250	Date/Time: 11-16-10 12:50

Distribution: WHITE – Laboratory returns with results YELLOW – Lab copy PINK – Retained by ARCADIS

AMRO Environmental Laboratories Corporation

SAMPLE RECEIPT CHECKLIST

111 Herrick Street
Merrimack, NH 03054
(603) 424-2022

Client: Arcadis
Project Name: Crane Weymouth MA
Ship via: (circle one) Fed Ex., UPS, AMRO Courier, Hand Del., Other Courier, Other:

AMRO ID: ~~1011054~~ nm 1011055
Date Rec.: 11-16-10
Date Due: 11-23-10

Items to be Checked Upon Receipt	Yes	No	NA	Comments
1. Army Samples received in individual plastic bags?			✓	
2. Custody Seals present?			✓	
3. Custody Seals Intact?			✓	
4. Air Bill included in folder if received?			✓	
5. Is COC included with samples?	✓			
6. Is COC signed and dated by client?	✓			
7. Laboratory receipt temperature. TEMP = 10				
Samples rec. with ice X ice packs___ neither___				
8. Were samples received the same day they were sampled?	✓			
Is client temperature = or <6°C ?	✓			
If no obtain authorization from the client for the analyses.				
Client authorization from: Date: Obtained by:				
9. Is the COC filled out correctly and completely?	✓			
10. Does the info on the COC match the samples?	✓			
11. Were samples rec. within holding time?	✓			
12. Were all samples properly labeled?	✓			
13. Were all samples properly preserved?	✓			
14. Were proper sample containers used?	✓			
15. Were all samples received intact? (none broken or leaking)	✓			
16. Were VOA vials rec. with no air bubbles?	✓			
17. Were the sample volumes sufficient for requested analysis?	✓			
18. Were all samples received?	✓			
19. VPH and VOA Soils only:			✓	
Sampling Method VPH (circle one): M=Methanol, E=EnCore (air-tight container)				
Sampling Method VOA (circle one): M=Methanol, SB=Sodium Bisulfate, E=EnCore, B=Bulk				
If M or SB:				
Does preservative cover the soil?				
If NO then client must be faxed.				
Does preservation level come close to the fill line on the vial?				
If NO then client must be faxed.				
Were vials provided by AMRO?				
If NO then weights MUST be obtained from client				
Was dry weight aliquot provided?				
If NO then fax client and inform the VOA lab ASAP.				
20. Subcontracted Samples:			✓	
What samples sent:				
Where sent:				
Date:				
Analysis:				
TAT:				
21. Information entered into:				
Internal Tracking Log?	✓			
Dry Weight Log?			✓	
Client Log?			✓	
Composite Log?			✓	
Filtration Log?			✓	

Received By: MG Date: 11-16-10 Logged in By: MM Date: 11-16-10
Labeled By: MM Date: 11-16-10 Checked By: MG Date: 11-17-10

NA= Not Applicable

AMRO Environmental
Laboratories Corporation

111 Herrick Street
Merrimack, NH 03054
(603) 424-2022

Please Circle if:
Sample= Soil
Sample= Waste

AMRO ID: 1011054

Sample ID	Analysis	Volume Sample	Preserv. Listed	Initial pH*	Acceptable? Y or N	List Preserv. Added by AMRO	Solution ID # of Preserv:	Volume Preservative Added	Final adjusted pH	Final adjusted pH (after 16 or 24 hours)
01A	8260	2,40ml	HCl	—	—					
01B	SVOC	2,1LA	—	7	Y					
01C	PCB	2,1LA	—	7	Y					
01D	Metal	500m	HNO_3	<2	Y					
01E	TPH	2,1LA	HCl	<2	Y					
02A	8260	40ml	HCl	—	—					

** = if the laboratory preserves the drinking water sample (s) for EPA Method 200 series, sample (s) should be held at least 16 hours prior to analysis or 24 hours for water sample (s).*

pH Checked By: MCO Date: 11-16-10 pH adjusted By: _____ Date: _____

pH Checked By: _____ Date: _____ pH adj.(16 or 24hrs)By: _____ Date: _____

CASE NARRATIVE

GC/MS VOLATILES:

1. The Method Blank (Batch ID:R45797), contained hexachlorobutadiene at 2.13ug/L, which was not present in the samples.

2. A Laboratory Control Sample (LCS) and Laboratory Sample Duplicate (LCSD) were performed on 11/19/10 (Batch ID:R45797).

2.1 The % Recovery for 4 analytes out of 71 analytes in the LCS was high outside the control limits.
2.2 The % Recovery for 3 analytes out of 71 analytes in the LCSD was high outside the control limits.

GC/MS SEMIVOLATILES:

1. No QC deviations were noted.

GC/MS SEMIVOLATILES:SIM:

1. The surrogate, 2-Fluorobiphenyl , recovered high outside the control limits, in the Method Blank (Batch ID:20830).

PCBs:

1. No QC deviations were noted.

METALS:

1. Iron only is reported per client request.

2. No QC deviations were noted.

WET CHEMISTRY:

1. No QC deviations were noted.

MassDEP Analytical Protocol Certification Form

Laboratory Name: AMRO Environmental Lab. Corp. Project #: MA000690.0010.00005

Project Location: Crane Weymouth MA RTN:

This Form provides certifications for the following data set: list Laboratory Sample ID Number(s):
1011055 -01, -02

Matrices: Groundwater/Surface Water ✓ Soil/Sediment Drinking Water Air Other:

CAM Protocol (check all that apply below):

8260 VOC CAM II A ✓	7470/7471 Hg CAM III B	MassDEP VPH CAM IV A	8081 Pesticides CAM V B	7196 Hex Cr CAM VI B	MassDEP APH CAM IX A
8270 SVOC CAM II B ✓	7010 Metals CAM III C	MassDEP EPH CAM IV B	8151 Herbicides CAM V C	8330 Explosives CAM VIII A	TO-15 VOC CAM IX B
6010 Metals CAM III A ✓	6020 Metals CAM III D	8082 PCB CAM V A ✓	9014 Total Cyanide/PAC CAM VI A	6860 Perchlorate CAM VIII B	

Affirmative Responses to Questions A through F are required for "Presumptive Certainty" status

A	Were all samples received in a condition consistent with those described on the Chain-of-Custody, properly preserved (including temperature) in the field or laboratory, and prepared/analyzed within method holding times?	Yes No
B	Were the analytical method(s) and all associated QC requirements specified in the selected CAM protocol(s) followed?	Yes No
C	Were all required corrective actions and analytical response actions specified in the selected CAM protocol(s) implemented for all identified performance standard non-conformances?	Yes No
D	Does the laboratory report comply with all the reporting requirements specified in CAM VII A, "Quality Assurance and Quality Control Guidelines for the Acquisition and Reporting of Analytical Data"?	Yes No
E	VPH, EPH, APH, and TO-15 only: a. VPH, EPH, and APH Methods only: Was each method conducted without significant modification(s)? (Refer to the individual method(s) for a list of significant modifications). b. APH and TO-15 Methods only: Was the complete analyte list reported for each method?	N/A Yes No Yes No
F	Were all applicable CAM protocol QC and performance standard non-conformances identified and evaluated in a laboratory narrative (including all "No" responses to Questions A through E)?	Yes No

Responses to Questions G, H and I below are required for "Presumptive Certainty" status

G	Were the reporting limits at or below all CAM reporting limits specified in the selected CAM protocol(s)?	Yes No[1]

Data User Note: Data that achieve "Presumptive Certainty" status may not necessarily meet the data usability and representativeness requirements described in 310 CMR 40. 1056 (2)(k) and WSC-07-350.

H	Were all QC performance standards specified in the CAM protocol(s) achieved?	Yes No[1]
I	Were results reported for the complete analyte list specified in the selected CAM protocol(s)?	Yes No[1]

[1] *All negative responses must be addressed in an attached laboratory narrative.*

I, the undersigned, attest under the pains and penalties of perjury that, based upon my personal inquiry of those responsible for obtaining the information, the material contained in this analytical report is, to the best of my knowledge and belief, accurate and complete.

Signature: [signature] Position: Vice President

Printed Name: Nancy Stewart Date: 11-30-10

DATA COMMENT PAGE

Organic Data Qualifiers

ND	Indicates compound was analyzed for, but not detected at or above the reporting limit.
J	Indicates an estimated value. This flag is used either when estimating a concentration for tentatively identified compounds where a 1:1 response is assumed, or when the data indicates the presence of a compound that meets the identification criteria but the result is less than the sample quantitation limit but greater than the method detection limit.
H	Method prescribed holding time exceeded.
E	This flag identifies compounds whose concentrations exceed the calibration range of the instrument for that specific analysis.
B	This flag is used when the analyte is found in the associated blank as well as in the sample.
R	RPD outside accepted recovery limits
RL	Reporting limit; defined as the lowest concentration the laboratory can accurately quantitate.
S	Spike Recovery outside accepted recovery limits.
#	See Case Narrative

Micro Data Qualifiers

TNTC	Too numerous to count

Inorganic Data Qualifiers

ND or U	Indicates element was analyzed for, but not detected at or above the reporting limit.
J	Indicates a value greater than or equal to the method detection limit, but less than the quantitation limit.
H	Indicates analytical holding time exceedance.
B	Indicates that the analyte is found in the associated blank, as well as in the sample.
MSA	Indicates value determined by the Method of Standard Addition
E	This flag identifies compounds whose concentrations exceed the calibration range of the instrument for that specific analysis.
R	RPD outside accepted recovery limits
RL	Reporting limit; defined as the lowest concentration the laboratory can accurately quantitate.
S	Spike Recovery outside accepted recovery limits.
W	Post-digestion spike for Furnace AA analysis is out of control limits (85-115), while sample absorbance is less than 50% of spike absorbance.
*	Duplicate analysis not within control limits.
+	Indicates the correlation coefficient for the Method of Standard Addition is less than 0.995
#	See Case Narrative

Report Comments:

1. Soil, sediment and sludge sample results are reported on a "dry weight" basis.
2. Reporting limits are adjusted for sample size used, dilutions and moisture content, if applicable.

AMRO Environmental Laboratories Corp.

Date: *24-Nov-10*

CLIENT:	ARCADIS U.S., Inc.	**Client Sample ID:**	Influent
Lab Order:	1011055	**Collection Date:**	11/16/2010 10:50:00 AM
Project:	MA000690.0010.00005 Crane Weymouth MA	**Matrix:**	AQUEOUS
Lab ID:	1011055-01A		

Analyses	Result	RL	Qual	Units	DF	Date Analyzed
VOLATILE ORGANIC COMPOUNDS BY MCP MET SW8260B						Analyst: SK
Acetone	ND	10		µg/L	1	11/19/2010 9:03:00 PM
Tertiary Amyl Methyl Ether	ND	2.0		µg/L	1	11/19/2010 9:03:00 PM
Benzene	ND	1.0		µg/L	1	11/19/2010 9:03:00 PM
Bromobenzene	ND	2.0		µg/L	1	11/19/2010 9:03:00 PM
Bromochloromethane	ND	2.0		µg/L	1	11/19/2010 9:03:00 PM
Bromodichloromethane	ND	2.0		µg/L	1	11/19/2010 9:03:00 PM
Bromoform	ND	2.0		µg/L	1	11/19/2010 9:03:00 PM
Bromomethane	ND	2.0		µg/L	1	11/19/2010 9:03:00 PM
sec-Butylbenzene	ND	2.0		µg/L	1	11/19/2010 9:03:00 PM
n-Butylbenzene	ND	2.0		µg/L	1	11/19/2010 9:03:00 PM
tert-Butylbenzene	ND	2.0		µg/L	1	11/19/2010 9:03:00 PM
Carbon disulfide	ND	2.0		µg/L	1	11/19/2010 9:03:00 PM
Carbon tetrachloride	ND	2.0		µg/L	1	11/19/2010 9:03:00 PM
Chlorobenzene	ND	2.0		µg/L	1	11/19/2010 9:03:00 PM
Dibromochloromethane	ND	2.0		µg/L	1	11/19/2010 9:03:00 PM
Chloroethane	ND	5.0		µg/L	1	11/19/2010 9:03:00 PM
Chloroform	ND	2.0		µg/L	1	11/19/2010 9:03:00 PM
Chloromethane	ND	3.0		µg/L	1	11/19/2010 9:03:00 PM
2-Chlorotoluene	ND	2.0		µg/L	1	11/19/2010 9:03:00 PM
4-Chlorotoluene	ND	2.0		µg/L	1	11/19/2010 9:03:00 PM
1,2-Dibromo-3-chloropropane	ND	5.0		µg/L	1	11/19/2010 9:03:00 PM
1,2-Dibromoethane	ND	2.0		µg/L	1	11/19/2010 9:03:00 PM
Dibromomethane	ND	2.0		µg/L	1	11/19/2010 9:03:00 PM
1,3-Dichlorobenzene	ND	2.0		µg/L	1	11/19/2010 9:03:00 PM
1,2-Dichlorobenzene	ND	2.0		µg/L	1	11/19/2010 9:03:00 PM
1,4-Dichlorobenzene	ND	2.0		µg/L	1	11/19/2010 9:03:00 PM
Dichlorodifluoromethane	ND	5.0		µg/L	1	11/19/2010 9:03:00 PM
1,1-Dichloroethane	ND	2.0		µg/L	1	11/19/2010 9:03:00 PM
1,2-Dichloroethane	ND	2.0		µg/L	1	11/19/2010 9:03:00 PM
1,1-Dichloroethene	ND	1.0		µg/L	1	11/19/2010 9:03:00 PM
cis-1,2-Dichloroethene	18	2.0		µg/L	1	11/19/2010 9:03:00 PM
trans-1,2-Dichloroethene	ND	2.0		µg/L	1	11/19/2010 9:03:00 PM
1,2-Dichloropropane	ND	2.0		µg/L	1	11/19/2010 9:03:00 PM
1,3-Dichloropropane	ND	2.0		µg/L	1	11/19/2010 9:03:00 PM
2,2-Dichloropropane	ND	2.0		µg/L	1	11/19/2010 9:03:00 PM
1,1-Dichloropropene	ND	2.0		µg/L	1	11/19/2010 9:03:00 PM
cis-1,3-Dichloropropene	ND	1.0		µg/L	1	11/19/2010 9:03:00 PM
trans-1,3-Dichloropropene	ND	1.0		µg/L	1	11/19/2010 9:03:00 PM
Diethyl ether	ND	5.0		µg/L	1	11/19/2010 9:03:00 PM

AMRO Environmental Laboratories Corp.

Date: *24-Nov-10*

CLIENT:	ARCADIS U.S., Inc.	**Client Sample ID:**	Influent
Lab Order:	1011055	**Collection Date:**	11/16/2010 10:50:00 AM
Project:	MA000690.0010.00005 Crane Weymouth MA	**Matrix:**	AQUEOUS
Lab ID:	1011055-01A		

Analyses	Result	RL	Qual	Units	DF	Date Analyzed
Diisopropyl ether	ND	2.0		µg/L	1	11/19/2010 9:03:00 PM
1,4-Dioxane	ND	50		µg/L	1	11/19/2010 9:03:00 PM
Ethyl Tertiary Butyl Ether	ND	2.0		µg/L	1	11/19/2010 9:03:00 PM
Ethylbenzene	ND	2.0		µg/L	1	11/19/2010 9:03:00 PM
Hexachlorobutadiene	ND	2.0		µg/L	1	11/19/2010 9:03:00 PM
2-Hexanone	ND	10		µg/L	1	11/19/2010 9:03:00 PM
Isopropylbenzene	ND	2.0		µg/L	1	11/19/2010 9:03:00 PM
4-Isopropyltoluene	ND	2.0		µg/L	1	11/19/2010 9:03:00 PM
2-Butanone	ND	10		µg/L	1	11/19/2010 9:03:00 PM
4-Methyl-2-pentanone	ND	10		µg/L	1	11/19/2010 9:03:00 PM
Methyl tert-butyl ether	ND	2.0		µg/L	1	11/19/2010 9:03:00 PM
Methylene chloride	ND	5.0		µg/L	1	11/19/2010 9:03:00 PM
Naphthalene	ND	5.0		µg/L	1	11/19/2010 9:03:00 PM
n-Propylbenzene	ND	2.0		µg/L	1	11/19/2010 9:03:00 PM
Styrene	ND	2.0		µg/L	1	11/19/2010 9:03:00 PM
1,1,1,2-Tetrachloroethane	ND	2.0		µg/L	1	11/19/2010 9:03:00 PM
1,1,2,2-Tetrachloroethane	ND	2.0		µg/L	1	11/19/2010 9:03:00 PM
Tetrachloroethene	ND	2.0		µg/L	1	11/19/2010 9:03:00 PM
Tetrahydrofuran	ND	10		µg/L	1	11/19/2010 9:03:00 PM
Toluene	ND	2.0		µg/L	1	11/19/2010 9:03:00 PM
1,2,4-Trichlorobenzene	ND	2.0		µg/L	1	11/19/2010 9:03:00 PM
1,2,3-Trichlorobenzene	ND	2.0		µg/L	1	11/19/2010 9:03:00 PM
1,1,1-Trichloroethane	ND	2.0		µg/L	1	11/19/2010 9:03:00 PM
1,1,2-Trichloroethane	ND	2.0		µg/L	1	11/19/2010 9:03:00 PM
Trichloroethene	17	2.0		µg/L	1	11/19/2010 9:03:00 PM
Trichlorofluoromethane	ND	2.0		µg/L	1	11/19/2010 9:03:00 PM
1,2,3-Trichloropropane	ND	2.0		µg/L	1	11/19/2010 9:03:00 PM
1,2,4-Trimethylbenzene	ND	2.0		µg/L	1	11/19/2010 9:03:00 PM
1,3,5-Trimethylbenzene	ND	2.0		µg/L	1	11/19/2010 9:03:00 PM
Vinyl chloride	ND	2.0		µg/L	1	11/19/2010 9:03:00 PM
o-Xylene	ND	2.0		µg/L	1	11/19/2010 9:03:00 PM
m,p-Xylene	ND	2.0		µg/L	1	11/19/2010 9:03:00 PM
Surr: Dibromofluoromethane	110	70-130		%REC	1	11/19/2010 9:03:00 PM
Surr: 1,2-Dichloroethane-d4	121	70-130		%REC	1	11/19/2010 9:03:00 PM
Surr: Toluene-d8	106	70-130		%REC	1	11/19/2010 9:03:00 PM
Surr: 4-Bromofluorobenzene	115	70-130		%REC	1	11/19/2010 9:03:00 PM

AMRO Environmental Laboratories Corp.

Date: *24-Nov-10*

CLIENT:	ARCADIS U.S., Inc.	**Client Sample ID:**	Trip Blank
Lab Order:	1011055	**Collection Date:**	11/16/2010
Project:	MA000690.0010.00005 Crane Weymouth MA	**Matrix:**	AQUEOUS
Lab ID:	1011055-02A		

Analyses	Result	RL	Qual	Units	DF	Date Analyzed
VOLATILE ORGANIC COMPOUNDS BY MCP MET SW8260B						Analyst: **SK**
Acetone	ND	10		µg/L	1	11/19/2010 2:49:00 PM
Tertiary Amyl Methyl Ether	ND	2.0		µg/L	1	11/19/2010 2:49:00 PM
Benzene	ND	1.0		µg/L	1	11/19/2010 2:49:00 PM
Bromobenzene	ND	2.0		µg/L	1	11/19/2010 2:49:00 PM
Bromochloromethane	ND	2.0		µg/L	1	11/19/2010 2:49:00 PM
Bromodichloromethane	ND	2.0		µg/L	1	11/19/2010 2:49:00 PM
Bromoform	ND	2.0		µg/L	1	11/19/2010 2:49:00 PM
Bromomethane	ND	2.0		µg/L	1	11/19/2010 2:49:00 PM
sec-Butylbenzene	ND	2.0		µg/L	1	11/19/2010 2:49:00 PM
n-Butylbenzene	ND	2.0		µg/L	1	11/19/2010 2:49:00 PM
tert-Butylbenzene	ND	2.0		µg/L	1	11/19/2010 2:49:00 PM
Carbon disulfide	ND	2.0		µg/L	1	11/19/2010 2:49:00 PM
Carbon tetrachloride	ND	2.0		µg/L	1	11/19/2010 2:49:00 PM
Chlorobenzene	ND	2.0		µg/L	1	11/19/2010 2:49:00 PM
Dibromochloromethane	ND	2.0		µg/L	1	11/19/2010 2:49:00 PM
Chloroethane	ND	5.0		µg/L	1	11/19/2010 2:49:00 PM
Chloroform	ND	2.0		µg/L	1	11/19/2010 2:49:00 PM
Chloromethane	ND	3.0		µg/L	1	11/19/2010 2:49:00 PM
2-Chlorotoluene	ND	2.0		µg/L	1	11/19/2010 2:49:00 PM
4-Chlorotoluene	ND	2.0		µg/L	1	11/19/2010 2:49:00 PM
1,2-Dibromo-3-chloropropane	ND	5.0		µg/L	1	11/19/2010 2:49:00 PM
1,2-Dibromoethane	ND	2.0		µg/L	1	11/19/2010 2:49:00 PM
Dibromomethane	ND	2.0		µg/L	1	11/19/2010 2:49:00 PM
1,3-Dichlorobenzene	ND	2.0		µg/L	1	11/19/2010 2:49:00 PM
1,2-Dichlorobenzene	ND	2.0		µg/L	1	11/19/2010 2:49:00 PM
1,4-Dichlorobenzene	ND	2.0		µg/L	1	11/19/2010 2:49:00 PM
Dichlorodifluoromethane	ND	5.0		µg/L	1	11/19/2010 2:49:00 PM
1,1-Dichloroethane	ND	2.0		µg/L	1	11/19/2010 2:49:00 PM
1,2-Dichloroethane	ND	2.0		µg/L	1	11/19/2010 2:49:00 PM
1,1-Dichloroethene	ND	1.0		µg/L	1	11/19/2010 2:49:00 PM
cis-1,2-Dichloroethene	ND	2.0		µg/L	1	11/19/2010 2:49:00 PM
trans-1,2-Dichloroethene	ND	2.0		µg/L	1	11/19/2010 2:49:00 PM
1,2-Dichloropropane	ND	2.0		µg/L	1	11/19/2010 2:49:00 PM
1,3-Dichloropropane	ND	2.0		µg/L	1	11/19/2010 2:49:00 PM
2,2-Dichloropropane	ND	2.0		µg/L	1	11/19/2010 2:49:00 PM
1,1-Dichloropropene	ND	2.0		µg/L	1	11/19/2010 2:49:00 PM
cis-1,3-Dichloropropene	ND	1.0		µg/L	1	11/19/2010 2:49:00 PM
trans-1,3-Dichloropropene	ND	1.0		µg/L	1	11/19/2010 2:49:00 PM
Diethyl ether	ND	5.0		µg/L	1	11/19/2010 2:49:00 PM

AMRO Environmental Laboratories Corp.

Date: *24-Nov-10*

CLIENT: ARCADIS U.S., Inc.
Lab Order: 1011055
Project: MA000690.0010.00005 Crane Weymouth MA
Lab ID: 1011055-02A

Client Sample ID: Trip Blank
Collection Date: 11/16/2010
Matrix: AQUEOUS

Analyses	Result	RL	Qual	Units	DF	Date Analyzed
Diisopropyl ether	ND	2.0		µg/L	1	11/19/2010 2:49:00 PM
1,4-Dioxane	ND	50		µg/L	1	11/19/2010 2:49:00 PM
Ethyl Tertiary Butyl Ether	ND	2.0		µg/L	1	11/19/2010 2:49:00 PM
Ethylbenzene	ND	2.0		µg/L	1	11/19/2010 2:49:00 PM
Hexachlorobutadiene	ND	2.0		µg/L	1	11/19/2010 2:49:00 PM
2-Hexanone	ND	10		µg/L	1	11/19/2010 2:49:00 PM
Isopropylbenzene	ND	2.0		µg/L	1	11/19/2010 2:49:00 PM
4-Isopropyltoluene	ND	2.0		µg/L	1	11/19/2010 2:49:00 PM
2-Butanone	ND	10		µg/L	1	11/19/2010 2:49:00 PM
4-Methyl-2-pentanone	ND	10		µg/L	1	11/19/2010 2:49:00 PM
Methyl tert-butyl ether	ND	2.0		µg/L	1	11/19/2010 2:49:00 PM
Methylene chloride	ND	5.0		µg/L	1	11/19/2010 2:49:00 PM
Naphthalene	ND	5.0		µg/L	1	11/19/2010 2:49:00 PM
n-Propylbenzene	ND	2.0		µg/L	1	11/19/2010 2:49:00 PM
Styrene	ND	2.0		µg/L	1	11/19/2010 2:49:00 PM
1,1,1,2-Tetrachloroethane	ND	2.0		µg/L	1	11/19/2010 2:49:00 PM
1,1,2,2-Tetrachloroethane	ND	2.0		µg/L	1	11/19/2010 2:49:00 PM
Tetrachloroethene	ND	2.0		µg/L	1	11/19/2010 2:49:00 PM
Tetrahydrofuran	ND	10		µg/L	1	11/19/2010 2:49:00 PM
Toluene	ND	2.0		µg/L	1	11/19/2010 2:49:00 PM
1,2,4-Trichlorobenzene	ND	2.0		µg/L	1	11/19/2010 2:49:00 PM
1,2,3-Trichlorobenzene	ND	2.0		µg/L	1	11/19/2010 2:49:00 PM
1,1,1-Trichloroethane	ND	2.0		µg/L	1	11/19/2010 2:49:00 PM
1,1,2-Trichloroethane	ND	2.0		µg/L	1	11/19/2010 2:49:00 PM
Trichloroethene	ND	2.0		µg/L	1	11/19/2010 2:49:00 PM
Trichlorofluoromethane	ND	2.0		µg/L	1	11/19/2010 2:49:00 PM
1,2,3-Trichloropropane	ND	2.0		µg/L	1	11/19/2010 2:49:00 PM
1,2,4-Trimethylbenzene	ND	2.0		µg/L	1	11/19/2010 2:49:00 PM
1,3,5-Trimethylbenzene	ND	2.0		µg/L	1	11/19/2010 2:49:00 PM
Vinyl chloride	ND	2.0		µg/L	1	11/19/2010 2:49:00 PM
o-Xylene	ND	2.0		µg/L	1	11/19/2010 2:49:00 PM
m,p-Xylene	ND	2.0		µg/L	1	11/19/2010 2:49:00 PM
Surr: Dibromofluoromethane	109	70-130		%REC	1	11/19/2010 2:49:00 PM
Surr: 1,2-Dichloroethane-d4	120	70-130		%REC	1	11/19/2010 2:49:00 PM
Surr: Toluene-d8	107	70-130		%REC	1	11/19/2010 2:49:00 PM
Surr: 4-Bromofluorobenzene	116	70-130		%REC	1	11/19/2010 2:49:00 PM

AMRO Environmental Laboratories Corp.

Date: *22-Nov-10*

CLIENT: ARCADIS U.S., Inc.
Work Order: 1011055
Project: MA000690.0010.00005 Crane Weymouth MA

QC SUMMARY REPORT

Method Blank

Sample ID: **mb-11/19/10** Batch ID: **R45797** Test Code: **SW8260B** Units: **µg/L** Analysis Date: **11/19/2010 2:15:00 PM** Prep Date: **11/19/2010**

Client ID: Run ID: **V-3_101119A** SeqNo: **760655**

Analyte	QC Sample Result	RL	Units	QC Spike Amount	Original Sample Result	%REC	LowLimit	HighLimit	Original Sample or MS Result	%RPD	RPDLimit	Qua
Acetone	ND	10	µg/L									
Tertiary Amyl Methyl Ether	ND	2.0	µg/L									
Benzene	ND	1.0	µg/L									
Bromobenzene	ND	2.0	µg/L									
Bromochloromethane	ND	2.0	µg/L									
Bromodichloromethane	ND	2.0	µg/L									
Bromoform	ND	2.0	µg/L									
Bromomethane	ND	2.0	µg/L									
sec-Butylbenzene	ND	2.0	µg/L									
n-Butylbenzene	ND	2.0	µg/L									
tert-Butylbenzene	ND	2.0	µg/L									
Carbon disulfide	ND	2.0	µg/L									
Carbon tetrachloride	ND	2.0	µg/L									
Chlorobenzene	ND	2.0	µg/L									
Dibromochloromethane	ND	2.0	µg/L									
Chloroethane	ND	5.0	µg/L									
Chloroform	ND	2.0	µg/L									
Chloromethane	ND	3.0	µg/L									
2-Chlorotoluene	ND	2.0	µg/L									
4-Chlorotoluene	ND	2.0	µg/L									
1,2-Dibromo-3-chloropropane	ND	5.0	µg/L									
1,2-Dibromoethane	ND	2.0	µg/L									
Dibromomethane	ND	2.0	µg/L									
1,3-Dichlorobenzene	ND	2.0	µg/L									
1,2-Dichlorobenzene	ND	2.0	µg/L									

Qualifiers: ND - Not Detected at the Reporting Limit; S - Spike Recovery outside accepted recovery limits; B - Analyte detected in the associated Method Blank; J - Analyte detected below quantitation limits; R - RPD outside accepted recovery limits; NA - Not applicable where J values or ND results occur; RL - Reporting Limit; defined as the lowest concentration the laboratory can accurately quantitate.

AMRO Environmental Laboratories Corp.

Date: *22-Nov-10*

CLIENT: ARCADIS U.S., Inc.
Work Order: 1011055
Project: MA000690.0010.00005 Crane Weymouth MA

QC SUMMARY REPORT

Method Blank

1,4-Dichlorobenzene	ND	2.0	µg/L
Dichlorodifluoromethane	ND	5.0	µg/L
1,1-Dichloroethane	ND	2.0	µg/L
1,2-Dichloroethane	ND	2.0	µg/L
1,1-Dichloroethene	ND	1.0	µg/L
cis-1,2-Dichloroethene	ND	2.0	µg/L
trans-1,2-Dichloroethene	ND	2.0	µg/L
1,2-Dichloropropane	ND	2.0	µg/L
1,3-Dichloropropane	ND	2.0	µg/L
2,2-Dichloropropane	ND	2.0	µg/L
1,1-Dichloropropene	ND	2.0	µg/L
cis-1,3-Dichloropropene	ND	1.0	µg/L
trans-1,3-Dichloropropene	ND	1.0	µg/L
Diethyl ether	ND	5.0	µg/L
Diisopropyl ether	ND	2.0	µg/L
1,4-Dioxane	ND	50	µg/L
Ethyl Tertiary Butyl Ether	ND	2.0	µg/L
Ethylbenzene	ND	2.0	µg/L
Hexachlorobutadiene	2.13	2.0	µg/L
2-Hexanone	ND	10	µg/L
Isopropylbenzene	ND	2.0	µg/L
4-Isopropyltoluene	ND	2.0	µg/L
2-Butanone	ND	10	µg/L
4-Methyl-2-pentanone	ND	10	µg/L
Methyl tert-butyl ether	ND	2.0	µg/L
Methylene chloride	ND	5.0	µg/L
Naphthalene	ND	5.0	µg/L
n-Propylbenzene	ND	2.0	µg/L
Styrene	ND	2.0	µg/L
1,1,1,2-Tetrachloroethane	ND	2.0	µg/L
1,1,2,2-Tetrachloroethane	ND	2.0	µg/L

Qualifiers: ND - Not Detected at the Reporting Limit
J - Analyte detected below quantitation limits
S - Spike Recovery outside accepted recovery limits
R - RPD outside accepted recovery limits
B - Analyte detected in the associated Method Blank
NA - Not applicable where J values or ND results occur
RL - Reporting Limit; defined as the lowest concentration the laboratory can accurately quantitate.

AMRO Environmental Laboratories Corp.

Date: *22-Nov-10*

CLIENT: ARCADIS U.S., Inc.
Work Order: 1011055
Project: MA000690.0010.00005 Crane Weymouth MA

QC SUMMARY REPORT

Method Blank

Tetrachloroethene	ND	2.0	µg/L						
Tetrahydrofuran	ND	10	µg/L						
Toluene	ND	2.0	µg/L						
1,2,4-Trichlorobenzene	ND	2.0	µg/L						
1,2,3-Trichlorobenzene	ND	2.0	µg/L						
1,1,1-Trichloroethane	ND	2.0	µg/L						
1,1,2-Trichloroethane	ND	2.0	µg/L						
Trichloroethene	ND	2.0	µg/L						
Trichlorofluoromethane	ND	2.0	µg/L						
1,2,3-Trichloropropane	ND	2.0	µg/L						
1,2,4-Trimethylbenzene	ND	2.0	µg/L						
1,3,5-Trimethylbenzene	ND	2.0	µg/L						
Vinyl chloride	ND	2.0	µg/L						
o-Xylene	ND	2.0	µg/L						
m,p-Xylene	ND	2.0	µg/L						
Surr: Dibromofluoromethane	27.63	2.0	µg/L	25	0	111	70	130	0
Surr: 1,2-Dichloroethane-d4	29.96	2.0	µg/L	25	0	120	70	130	0
Surr: Toluene-d8	27.03	2.0	µg/L	25	0	108	70	130	0
Surr: 4-Bromofluorobenzene	24.98	2.0	µg/L	25	0	99.9	70	130	0

Qualifiers: ND - Not Detected at the Reporting Limit
S - Spike Recovery outside accepted recovery limits
B - Analyte detected in the associated Method Blank
J - Analyte detected below quantitation limits
R - RPD outside accepted recovery limits
NA - Not applicable where J values or ND results occur
RL - Reporting Limit; defined as the lowest concentration the laboratory can accurately quantitate.

AMRO Environmental Laboratories Corp.

Date: *22-Nov-10*

CLIENT: ARCADIS U.S., Inc.
Work Order: 1011055
Project: MA000690.0010.00005 Crane Weymouth MA

QC SUMMARY REPORT

Laboratory Control Spike

Sample ID: **lcs-11/19/10** Batch ID: **R45797** Test Code: **SW8260B** Units: **µg/L** Analysis Date: **11/19/2010 12:32:00 P** Prep Date: **11/19/2010**

Client ID: Run ID: **V-3_101119A** SeqNo: **760657**

Analyte	QC Sample Result	RL	Units	QC Spike Amount	Original Sample Result	%REC	LowLimit	HighLimit	Original Sample or MS Result	%RPD	RPDLimit	Qua
Acetone	15.42	10	µg/L	20	0	77.1	70	130	0			
Tertiary Amyl Methyl Ether	16.76	2.0	µg/L	20	0	83.8	70	130	0			
Benzene	19.87	1.0	µg/L	20	0	99.4	70	130	0			
Bromobenzene	19.61	2.0	µg/L	20	0	98	70	130	0			
Bromochloromethane	18.49	2.0	µg/L	20	0	92.5	70	130	0			
Bromodichloromethane	18.64	2.0	µg/L	20	0	93.2	70	130	0			
Bromoform	13.22	2.0	µg/L	20	0	66.1	70	130	0			S
Bromomethane	18.74	2.0	µg/L	20	0	93.7	70	130	0			
sec-Butylbenzene	19.9	2.0	µg/L	20	0	99.5	70	130	0			
n-Butylbenzene	21.2	2.0	µg/L	20	0	106	70	130	0			
tert-Butylbenzene	18.66	2.0	µg/L	20	0	93.3	70	130	0			
Carbon disulfide	17.02	2.0	µg/L	20	0	85.1	70	130	0			
Carbon tetrachloride	18.5	2.0	µg/L	20	0	92.5	70	130	0			
Chlorobenzene	21.41	2.0	µg/L	20	0	107	70	130	0			
Dibromochloromethane	15.67	2.0	µg/L	20	0	78.4	70	130	0			
Chloroethane	18.01	5.0	µg/L	20	0	90	70	130	0			
Chloroform	20.4	2.0	µg/L	20	0	102	70	130	0			
Chloromethane	24.47	3.0	µg/L	20	0	122	70	130	0			
2-Chlorotoluene	19.33	2.0	µg/L	20	0	96.7	70	130	0			
4-Chlorotoluene	19.2	2.0	µg/L	20	0	96	70	130	0			
1,2-Dibromo-3-chloropropane	12.74	5.0	µg/L	20	0	63.7	70	130	0			S
1,2-Dibromoethane	20.71	2.0	µg/L	20	0	104	70	130	0			
Dibromomethane	21.38	2.0	µg/L	20	0	107	70	130	0			
1,3-Dichlorobenzene	20.05	2.0	µg/L	20	0	100	70	130	0			
1,2-Dichlorobenzene	19.82	2.0	µg/L	20	0	99.1	70	130	0			

Qualifiers: ND - Not Detected at the Reporting Limit
J - Analyte detected below quantitation limits
RL - Reporting Limit; defined as the lowest concentration the laboratory can accurately quantitate.
S - Spike Recovery outside accepted recovery limits
R - RPD outside accepted recovery limits
B - Analyte detected in the associated Method Blank
NA - Not applicable where J values or ND results occur

AMRO Environmental Laboratories Corp.

Date: *22-Nov-10*

CLIENT: ARCADIS U.S., Inc.
Work Order: 1011055
Project: MA000690.0010.00005 Crane Weymouth MA

QC SUMMARY REPORT

Laboratory Control Spike

1,4-Dichlorobenzene	20.52	2.0	µg/L	20	0	103	70	130	0	
Dichlorodifluoromethane	22.97	5.0	µg/L	20	0	115	70	130	0	
1,1-Dichloroethane	19.25	2.0	µg/L	20	0	96.2	70	130	0	
1,2-Dichloroethane	24.26	2.0	µg/L	20	0	121	70	130	0	
1,1-Dichloroethene	19.98	1.0	µg/L	20	0	99.9	70	130	0	
cis-1,2-Dichloroethene	18.88	2.0	µg/L	20	0	94.4	70	130	0	
trans-1,2-Dichloroethene	19.65	2.0	µg/L	20	0	98.2	70	130	0	
1,2-Dichloropropane	19.35	2.0	µg/L	20	0	96.8	70	130	0	
1,3-Dichloropropane	17.8	2.0	µg/L	20	0	89	70	130	0	
2,2-Dichloropropane	20.72	2.0	µg/L	20	0	104	70	130	0	
1,1-Dichloropropene	24.28	2.0	µg/L	20	0	121	70	130	0	
cis-1,3-Dichloropropene	17.98	1.0	µg/L	20	0	89.9	70	130	0	
trans-1,3-Dichloropropene	16.95	1.0	µg/L	20	0	84.8	70	130	0	
Diethyl ether	17.18	5.0	µg/L	20	0	85.9	70	130	0	
Diisopropyl ether	18.78	2.0	µg/L	20	0	93.9	70	130	0	
1,4-Dioxane	86.63	50	µg/L	100	0	86.6	70	130	0	
Ethyl Tertiary Butyl Ether	18.08	2.0	µg/L	20	0	90.4	70	130	0	
Ethylbenzene	20.39	2.0	µg/L	20	0	102	70	130	0	
Hexachlorobutadiene	23.4	2.0	µg/L	20	0	117	70	130	0	B
2-Hexanone	13.3	10	µg/L	20	0	66.5	70	130	0	S
Isopropylbenzene	20.38	2.0	µg/L	20	0	102	70	130	0	
4-Isopropyltoluene	19.58	2.0	µg/L	20	0	97.9	70	130	0	
2-Butanone	13.33	10	µg/L	20	0	66.7	70	130	0	S
4-Methyl-2-pentanone	15.74	10	µg/L	20	0	78.7	70	130	0	
Methyl tert-butyl ether	17.36	2.0	µg/L	20	0	86.8	70	130	0	
Methylene chloride	20.12	5.0	µg/L	20	0	101	70	130	0	
Naphthalene	17.14	5.0	µg/L	20	0	85.7	70	130	0	
n-Propylbenzene	19.46	2.0	µg/L	20	0	97.3	70	130	0	
Styrene	19.75	2.0	µg/L	20	0	98.8	70	130	0	
1,1,1,2-Tetrachloroethane	17.54	2.0	µg/L	20	0	87.7	70	130	0	
1,1,2,2-Tetrachloroethane	18.07	2.0	µg/L	20	0	90.4	70	130	0	

Qualifiers: ND - Not Detected at the Reporting Limit
J - Analyte detected below quantitation limits
RL - Reporting Limit; defined as the lowest concentration the laboratory can accurately quantitate.
S - Spike Recovery outside accepted recovery limits
R - RPD outside accepted recovery limits
B - Analyte detected in the associated Method Blank
NA - Not applicable where J values or ND results occur

AMRO Environmental Laboratories Corp.

Date: *22-Nov-10*

CLIENT: ARCADIS U.S., Inc.
Work Order: 1011055
Project: MA000690.0010.00005 Crane Weymouth MA

QC SUMMARY REPORT

Laboratory Control Spike

Tetrachloroethene	21.8	2.0	µg/L	20	0	109	70	130	0
Tetrahydrofuran	18.27	10	µg/L	20	0	91.4	70	130	0
Toluene	20.18	2.0	µg/L	20	0	101	70	130	0
1,2,4-Trichlorobenzene	20.89	2.0	µg/L	20	0	104	70	130	0
1,2,3-Trichlorobenzene	19.96	2.0	µg/L	20	0	99.8	70	130	0
1,1,1-Trichloroethane	21.87	2.0	µg/L	20	0	109	70	130	0
1,1,2-Trichloroethane	20.6	2.0	µg/L	20	0	103	70	130	0
Trichloroethene	21.96	2.0	µg/L	20	0	110	70	130	0
Trichlorofluoromethane	23.29	2.0	µg/L	20	0	116	70	130	0
1,2,3-Trichloropropane	17.13	2.0	µg/L	20	0	85.7	70	130	0
1,2,4-Trimethylbenzene	19.51	2.0	µg/L	20	0	97.6	70	130	0
1,3,5-Trimethylbenzene	19.49	2.0	µg/L	20	0	97.5	70	130	0
Vinyl chloride	21.51	2.0	µg/L	20	0	108	70	130	0
o-Xylene	19.11	2.0	µg/L	20	0	95.6	70	130	0
m,p-Xylene	39.86	2.0	µg/L	40	0	99.7	70	130	0
Surr: Dibromofluoromethane	26.5	2.0	µg/L	25	0	106	70	130	0
Surr: 1,2-Dichloroethane-d4	29.69	2.0	µg/L	25	0	119	70	130	0
Surr: Toluene-d8	26.3	2.0	µg/L	25	0	105	70	130	0
Surr: 4-Bromofluorobenzene	30.81	2.0	µg/L	25	0	123	70	130	0

Qualifiers: ND - Not Detected at the Reporting Limit
J - Analyte detected below quantitation limits
RL - Reporting Limit; defined as the lowest concentration the laboratory can accurately quantitate.
S - Spike Recovery outside accepted recovery limits
R - RPD outside accepted recovery limits
B - Analyte detected in the associated Method Blank
NA - Not applicable where J values or ND results occur

AMRO Environmental Laboratories Corp.

Date: *22-Nov-10*

CLIENT: ARCADIS U.S., Inc.
Work Order: 1011055
Project: MA000690.0010.00005 Crane Weymouth MA

QC SUMMARY REPORT

Laboratory Control Spike Duplicate

Sample ID: **lcsd-11/19/10** Batch ID: **R45797** Test Code: **SW8260B** Units: **µg/L** Analysis Date: **11/19/2010 1:07:00 PM** Prep Date: **11/19/2010**

Client ID: Run ID: **V-3_101119A** SeqNo: **760656**

Analyte	QC Sample Result	RL	Units	QC Spike Amount	Original Sample Result	%REC	LowLimit	HighLimit	Original Sample or MS Result	%RPD	RPDLimit	Qua
Acetone	14.81	10	µg/L	20	0	74	70	130	15.42	4.04	20	
Tertiary Amyl Methyl Ether	17.66	2.0	µg/L	20	0	88.3	70	130	16.76	5.23	20	
Benzene	20.74	1.0	µg/L	20	0	104	70	130	19.87	4.28	20	
Bromobenzene	19.2	2.0	µg/L	20	0	96	70	130	19.61	2.11	20	
Bromochloromethane	19.41	2.0	µg/L	20	0	97	70	130	18.49	4.85	20	
Bromodichloromethane	19.31	2.0	µg/L	20	0	96.6	70	130	18.64	3.53	20	
Bromoform	13.4	2.0	µg/L	20	0	67	70	130	13.22	1.35	20	S
Bromomethane	17.51	2.0	µg/L	20	0	87.6	70	130	18.74	6.79	20	
sec-Butylbenzene	19.97	2.0	µg/L	20	0	99.8	70	130	19.9	0.351	20	
n-Butylbenzene	20.92	2.0	µg/L	20	0	105	70	130	21.2	1.33	20	
tert-Butylbenzene	18.65	2.0	µg/L	20	0	93.3	70	130	18.66	0.0536	20	
Carbon disulfide	17.1	2.0	µg/L	20	0	85.5	70	130	17.02	0.469	20	
Carbon tetrachloride	19.59	2.0	µg/L	20	0	98	70	130	18.5	5.72	20	
Chlorobenzene	20.97	2.0	µg/L	20	0	105	70	130	21.41	2.08	20	
Dibromochloromethane	15.57	2.0	µg/L	20	0	77.8	70	130	15.67	0.64	20	
Chloroethane	17.5	5.0	µg/L	20	0	87.5	70	130	18.01	2.87	20	
Chloroform	21.46	2.0	µg/L	20	0	107	70	130	20.4	5.06	20	
Chloromethane	24.58	3.0	µg/L	20	0	123	70	130	24.47	0.449	20	
2-Chlorotoluene	19.05	2.0	µg/L	20	0	95.2	70	130	19.33	1.46	20	
4-Chlorotoluene	19.23	2.0	µg/L	20	0	96.2	70	130	19.2	0.156	20	
1,2-Dibromo-3-chloropropane	12.55	5.0	µg/L	20	0	62.8	70	130	12.74	1.5	20	S
1,2-Dibromoethane	22.35	2.0	µg/L	20	0	112	70	130	20.71	7.62	20	
Dibromomethane	22.12	2.0	µg/L	20	0	111	70	130	21.38	3.4	20	
1,3-Dichlorobenzene	20.39	2.0	µg/L	20	0	102	70	130	20.05	1.68	20	
1,2-Dichlorobenzene	19.65	2.0	µg/L	20	0	98.2	70	130	19.82	0.861	20	

Qualifiers: ND - Not Detected at the Reporting Limit; S - Spike Recovery outside accepted recovery limits; B - Analyte detected in the associated Method Blank; J - Analyte detected below quantitation limits; R - RPD outside accepted recovery limits; NA - Not applicable where J values or ND results occur; RL - Reporting Limit; defined as the lowest concentration the laboratory can accurately quantitate.

AMRO Environmental Laboratories Corp.

Date: *22-Nov-10*

CLIENT: ARCADIS U.S., Inc.
Work Order: 1011055
Project: MA000690.0010.00005 Crane Weymouth MA

QC SUMMARY REPORT

Laboratory Control Spike Duplicate

1,4-Dichlorobenzene	20.57	2.0	µg/L	20	0	103	70	130	20.52	0.243	20	
Dichlorodifluoromethane	23.05	5.0	µg/L	20	0	115	70	130	22.97	0.348	20	
1,1-Dichloroethane	20.23	2.0	µg/L	20	0	101	70	130	19.25	4.96	20	
1,2-Dichloroethane	25.73	2.0	µg/L	20	0	129	70	130	24.26	5.88	20	
1,1-Dichloroethene	20.86	1.0	µg/L	20	0	104	70	130	19.98	4.31	20	
cis-1,2-Dichloroethene	18.49	2.0	µg/L	20	0	92.5	70	130	18.88	2.09	20	
trans-1,2-Dichloroethene	20.43	2.0	µg/L	20	0	102	70	130	19.65	3.89	20	
1,2-Dichloropropane	19.5	2.0	µg/L	20	0	97.5	70	130	19.35	0.772	20	
1,3-Dichloropropane	18.52	2.0	µg/L	20	0	92.6	70	130	17.8	3.96	20	
2,2-Dichloropropane	21.39	2.0	µg/L	20	0	107	70	130	20.72	3.18	20	
1,1-Dichloropropene	24.95	2.0	µg/L	20	0	125	70	130	24.28	2.72	20	
cis-1,3-Dichloropropene	17.84	1.0	µg/L	20	0	89.2	70	130	17.98	0.782	20	
trans-1,3-Dichloropropene	17.4	1.0	µg/L	20	0	87	70	130	16.95	2.62	20	
Diethyl ether	18.78	5.0	µg/L	20	0	93.9	70	130	17.18	8.9	20	
Diisopropyl ether	19.45	2.0	µg/L	20	0	97.3	70	130	18.78	3.51	20	
1,4-Dioxane	87.69	50	µg/L	100	0	87.7	70	130	86.63	1.22	20	
Ethyl Tertiary Butyl Ether	19.4	2.0	µg/L	20	0	97	70	130	18.08	7.04	20	
Ethylbenzene	20.33	2.0	µg/L	20	0	102	70	130	20.39	0.295	20	
Hexachlorobutadiene	23.26	2.0	µg/L	20	0	116	70	130	23.4	0.6	20	B
2-Hexanone	13.38	10	µg/L	20	0	66.9	70	130	13.3	0.6	20	S
Isopropylbenzene	20.42	2.0	µg/L	20	0	102	70	130	20.38	0.196	20	
4-Isopropyltoluene	19.43	2.0	µg/L	20	0	97.2	70	130	19.58	0.769	20	
2-Butanone	14.28	10	µg/L	20	0	71.4	70	130	13.33	6.88	20	
4-Methyl-2-pentanone	16.16	10	µg/L	20	0	80.8	70	130	15.74	2.63	20	
Methyl tert-butyl ether	18.69	2.0	µg/L	20	0	93.4	70	130	17.36	7.38	20	
Methylene chloride	19.95	5.0	µg/L	20	0	99.8	70	130	20.12	0.849	20	
Naphthalene	17.25	5.0	µg/L	20	0	86.2	70	130	17.14	0.64	20	
n-Propylbenzene	19.23	2.0	µg/L	20	0	96.2	70	130	19.46	1.19	20	
Styrene	23.54	2.0	µg/L	20	0	118	70	130	19.75	17.5	20	
1,1,1,2-Tetrachloroethane	18.03	2.0	µg/L	20	0	90.2	70	130	17.54	2.76	20	
1,1,2,2-Tetrachloroethane	17.73	2.0	µg/L	20	0	88.6	70	130	18.07	1.9	20	

Qualifiers: ND - Not Detected at the Reporting Limit
J - Analyte detected below quantitation limits
RL - Reporting Limit; defined as the lowest concentration the laboratory can accurately quantitate.
S - Spike Recovery outside accepted recovery limits
R - RPD outside accepted recovery limits
B - Analyte detected in the associated Method Blank
NA - Not applicable where J values or ND results occur

AMRO Environmental Laboratories Corp.

Date: *22-Nov-10*

CLIENT: ARCADIS U.S., Inc.
Work Order: 1011055
Project: MA000690.0010.00005 Crane Weymouth MA

QC SUMMARY REPORT

Laboratory Control Spike Duplicate

Tetrachloroethene	22.01	2.0	µg/L	20	0	110	70	130	21.8	0.959	20
Tetrahydrofuran	17.59	10	µg/L	20	0	88	70	130	18.27	3.79	20
Toluene	20.86	2.0	µg/L	20	0	104	70	130	20.18	3.31	20
1,2,4-Trichlorobenzene	20.84	2.0	µg/L	20	0	104	70	130	20.89	0.24	20
1,2,3-Trichlorobenzene	19.81	2.0	µg/L	20	0	99	70	130	19.96	0.754	20
1,1,1-Trichloroethane	22.08	2.0	µg/L	20	0	110	70	130	21.87	0.956	20
1,1,2-Trichloroethane	20.97	2.0	µg/L	20	0	105	70	130	20.6	1.78	20
Trichloroethene	22.84	2.0	µg/L	20	0	114	70	130	21.96	3.93	20
Trichlorofluoromethane	24.19	2.0	µg/L	20	0	121	70	130	23.29	3.79	20
1,2,3-Trichloropropane	17.45	2.0	µg/L	20	0	87.2	70	130	17.13	1.85	20
1,2,4-Trimethylbenzene	19.54	2.0	µg/L	20	0	97.7	70	130	19.51	0.154	20
1,3,5-Trimethylbenzene	19.15	2.0	µg/L	20	0	95.8	70	130	19.49	1.76	20
Vinyl chloride	22.43	2.0	µg/L	20	0	112	70	130	21.51	4.19	20
o-Xylene	23.24	2.0	µg/L	20	0	116	70	130	19.11	19.5	20
m,p-Xylene	40.14	2.0	µg/L	40	0	100	70	130	39.86	0.7	20
Surr: Dibromofluoromethane	26.92	2.0	µg/L	25	0	108	70	130	0	0	0
Surr: 1,2-Dichloroethane-d4	29.83	2.0	µg/L	25	0	119	70	130	0	0	0
Surr: Toluene-d8	26.92	2.0	µg/L	25	0	108	70	130	0	0	0
Surr: 4-Bromofluorobenzene	30.89	2.0	µg/L	25	0	124	70	130	0	0	0

Qualifiers: ND - Not Detected at the Reporting Limit
J - Analyte detected below quantitation limits
RL - Reporting Limit; defined as the lowest concentration the laboratory can accurately quantitate.
S - Spike Recovery outside accepted recovery limits
R - RPD outside accepted recovery limits
B - Analyte detected in the associated Method Blank
NA - Not applicable where J values or ND results occur

AMRO Environmental Laboratories Corp.

Date: *24-Nov-10*

CLIENT:	ARCADIS U.S., Inc.	**Client Sample ID:**	Influent
Lab Order:	1011055	**Collection Date:**	11/16/2010 10:50:00 AM
Project:	MA000690.0010.00005 Crane Weymouth MA	**Matrix:**	AQUEOUS
Lab ID:	1011055-01B		

Analyses	Result	RL	Qual	Units	DF	Date Analyzed
SEMIVOLATILE ORGANIC COMPOUNDS BY MCP SW8270C						Analyst: **KA**
Acenaphthene	ND	10		µg/L	1	11/19/2010 2:27:00 PM
Acenaphthylene	ND	10		µg/L	1	11/19/2010 2:27:00 PM
Acetophenone	ND	10		µg/L	1	11/19/2010 2:27:00 PM
Aniline	ND	10		µg/L	1	11/19/2010 2:27:00 PM
Anthracene	ND	10		µg/L	1	11/19/2010 2:27:00 PM
1,2-Diphenylhydrazine (as Azobenzene)	ND	10		µg/L	1	11/19/2010 2:27:00 PM
Benz(a)anthracene	ND	10		µg/L	1	11/19/2010 2:27:00 PM
Benzo(a)pyrene	ND	10		µg/L	1	11/19/2010 2:27:00 PM
Benzo(b)fluoranthene	ND	10		µg/L	1	11/19/2010 2:27:00 PM
Benzo(k)fluoranthene	ND	10		µg/L	1	11/19/2010 2:27:00 PM
Benzo(g,h,i)perylene	ND	10		µg/L	1	11/19/2010 2:27:00 PM
4-Bromophenyl phenyl ether	ND	10		µg/L	1	11/19/2010 2:27:00 PM
Butyl benzyl phthalate	ND	10		µg/L	1	11/19/2010 2:27:00 PM
Di-n-butyl phthalate	ND	10		µg/L	1	11/19/2010 2:27:00 PM
4-Chloroaniline	ND	10		µg/L	1	11/19/2010 2:27:00 PM
Bis(2-chloroethoxy)methane	ND	10		µg/L	1	11/19/2010 2:27:00 PM
Bis(2-chloroethyl)ether	ND	10		µg/L	1	11/19/2010 2:27:00 PM
Bis(2-chloroisopropyl)ether	ND	10		µg/L	1	11/19/2010 2:27:00 PM
2-Chloronaphthalene	ND	10		µg/L	1	11/19/2010 2:27:00 PM
2-Chlorophenol	ND	10		µg/L	1	11/19/2010 2:27:00 PM
Chrysene	ND	10		µg/L	1	11/19/2010 2:27:00 PM
Dibenz(a,h)anthracene	ND	10		µg/L	1	11/19/2010 2:27:00 PM
Dibenzofuran	ND	10		µg/L	1	11/19/2010 2:27:00 PM
1,2-Dichlorobenzene	ND	10		µg/L	1	11/19/2010 2:27:00 PM
1,3-Dichlorobenzene	ND	10		µg/L	1	11/19/2010 2:27:00 PM
1,4-Dichlorobenzene	ND	5.0		µg/L	1	11/19/2010 2:27:00 PM
3,3'-Dichlorobenzidine	ND	10		µg/L	1	11/19/2010 2:27:00 PM
2,4-Dichlorophenol	ND	10		µg/L	1	11/19/2010 2:27:00 PM
Diethyl phthalate	ND	10		µg/L	1	11/19/2010 2:27:00 PM
Dimethyl phthalate	ND	10		µg/L	1	11/19/2010 2:27:00 PM
2,4-Dimethylphenol	ND	10		µg/L	1	11/19/2010 2:27:00 PM
2,4-Dinitrophenol	ND	20		µg/L	1	11/19/2010 2:27:00 PM
2,4-Dinitrotoluene	ND	10		µg/L	1	11/19/2010 2:27:00 PM
2,6-Dinitrotoluene	ND	10		µg/L	1	11/19/2010 2:27:00 PM
Bis(2-ethylhexyl)phthalate	ND	5.0		µg/L	1	11/19/2010 2:27:00 PM
Fluoranthene	ND	10		µg/L	1	11/19/2010 2:27:00 PM
Fluorene	ND	10		µg/L	1	11/19/2010 2:27:00 PM
Hexachlorobenzene	ND	10		µg/L	1	11/19/2010 2:27:00 PM

AMRO Environmental Laboratories Corp.

Date: *24-Nov-10*

CLIENT:	ARCADIS U.S., Inc.	**Client Sample ID:**	Influent
Lab Order:	1011055	**Collection Date:**	11/16/2010 10:50:00 AM
Project:	MA000690.0010.00005 Crane Weymouth MA	**Matrix:**	AQUEOUS
Lab ID:	1011055-01B		

Analyses	Result	RL	Qual	Units	DF	Date Analyzed
Hexachlorobutadiene	ND	10		µg/L	1	11/19/2010 2:27:00 PM
Hexachloroethane	ND	5.0		µg/L	1	11/19/2010 2:27:00 PM
Indeno(1,2,3-cd)pyrene	ND	10		µg/L	1	11/19/2010 2:27:00 PM
Isophorone	ND	10		µg/L	1	11/19/2010 2:27:00 PM
2-Methylnaphthalene	ND	10		µg/L	1	11/19/2010 2:27:00 PM
2-Methylphenol	ND	10		µg/L	1	11/19/2010 2:27:00 PM
4-Methylphenol	ND	10		µg/L	1	11/19/2010 2:27:00 PM
Naphthalene	ND	10		µg/L	1	11/19/2010 2:27:00 PM
Nitrobenzene	ND	10		µg/L	1	11/19/2010 2:27:00 PM
2-Nitrophenol	ND	10		µg/L	1	11/19/2010 2:27:00 PM
4-Nitrophenol	ND	20		µg/L	1	11/19/2010 2:27:00 PM
Di-n-octyl phthalate	ND	10		µg/L	1	11/19/2010 2:27:00 PM
Pentachlorophenol	ND	20		µg/L	1	11/19/2010 2:27:00 PM
Phenanthrene	ND	10		µg/L	1	11/19/2010 2:27:00 PM
Phenol	ND	10		µg/L	1	11/19/2010 2:27:00 PM
Pyrene	ND	10		µg/L	1	11/19/2010 2:27:00 PM
1,2,4-Trichlorobenzene	ND	10		µg/L	1	11/19/2010 2:27:00 PM
2,4,5-Trichlorophenol	ND	10		µg/L	1	11/19/2010 2:27:00 PM
2,4,6-Trichlorophenol	ND	10		µg/L	1	11/19/2010 2:27:00 PM
Surr: 2-Fluorophenol	46.4	15-110		%REC	1	11/19/2010 2:27:00 PM
Surr: Phenol-d5	28.1	15-110		%REC	1	11/19/2010 2:27:00 PM
Surr: Nitrobenzene-d5	79.6	30-130		%REC	1	11/19/2010 2:27:00 PM
Surr: 2-Fluorobiphenyl	80.0	30-130		%REC	1	11/19/2010 2:27:00 PM
Surr: 2,4,6-Tribromophenol	79.6	15-110		%REC	1	11/19/2010 2:27:00 PM
Surr: 4-Terphenyl-d14	94.4	30-130		%REC	1	11/19/2010 2:27:00 PM

AMRO Environmental Laboratories Corp.

Date: *30-Nov-10*

CLIENT: ARCADIS U.S., Inc.
Work Order: 1011055
Project: MA000690.0010.00005 Crane Weymouth MA

QC SUMMARY REPORT

Method Blank

Sample ID **MB-20830** Batch ID: **20830** Test Code: **SW8270C** Units: **µg/L** Analysis Date **11/19/10 12:35:00 PM** Prep Date **11/19/10**

Client ID: Run ID: **SV-2_101119A** SeqNo: **760635**

Analyte	QC Sample Result	RL	Units	QC Spike Amount	Original Sample Result	%REC	LowLimit	HighLimit	Original Sample or MS Result	%RPD	RPDLimit	Qua
Acenaphthene	ND	10	µg/L									
Acenaphthylene	ND	10	µg/L									
Acetophenone	ND	10	µg/L									
Aniline	ND	10	µg/L									
Anthracene	ND	10	µg/L									
1,2-Diphenylhydrazine (as Azobe	ND	10	µg/L									
Benz(a)anthracene	ND	10	µg/L									
Benzo(a)pyrene	ND	10	µg/L									
Benzo(b)fluoranthene	ND	10	µg/L									
Benzo(k)fluoranthene	ND	10	µg/L									
Benzo(g,h,i)perylene	ND	10	µg/L									
4-Bromophenyl phenyl ether	ND	10	µg/L									
Butyl benzyl phthalate	ND	10	µg/L									
Di-n-butyl phthalate	ND	10	µg/L									
4-Chloroaniline	ND	10	µg/L									
Bis(2-chloroethoxy)methane	ND	10	µg/L									
Bis(2-chloroethyl)ether	ND	10	µg/L									
Bis(2-chloroisopropyl)ether	ND	10	µg/L									
2-Chloronaphthalene	ND	10	µg/L									
2-Chlorophenol	ND	10	µg/L									
Chrysene	ND	10	µg/L									
Dibenz(a,h)anthracene	ND	10	µg/L									
Dibenzofuran	ND	10	µg/L									
1,2-Dichlorobenzene	ND	10	µg/L									
1,3-Dichlorobenzene	ND	10	µg/L									

Qualifiers: ND - Not Detected at the Reporting Limit
J - Analyte detected below quantitation limits
RL - Reporting Limit; defined as the lowest concentration the laboratory can accurately quantitate.
S - Spike Recovery outside accepted recovery limits
R - RPD outside accepted recovery limits
B - Analyte detected in the associated Method Blank
NA - Not applicable where J values or ND results occur

AMRO Environmental Laboratories Corp.

Date: *30-Nov-10*

CLIENT: ARCADIS U.S., Inc.
Work Order: 1011055
Project: MA000690.0010.00005 Crane Weymouth MA

QC SUMMARY REPORT

Method Blank

1,4-Dichlorobenzene	ND	5.0	µg/L
3,3'-Dichlorobenzidine	ND	10	µg/L
2,4-Dichlorophenol	ND	10	µg/L
Diethyl phthalate	ND	10	µg/L
Dimethyl phthalate	ND	10	µg/L
2,4-Dimethylphenol	ND	10	µg/L
2,4-Dinitrophenol	ND	20	µg/L
2,4-Dinitrotoluene	ND	10	µg/L
2,6-Dinitrotoluene	ND	10	µg/L
Bis(2-ethylhexyl)phthalate	ND	5.0	µg/L
Fluoranthene	ND	10	µg/L
Fluorene	ND	10	µg/L
Hexachlorobenzene	ND	10	µg/L
Hexachlorobutadiene	ND	10	µg/L
Hexachloroethane	ND	5.0	µg/L
Indeno(1,2,3-cd)pyrene	ND	10	µg/L
Isophorone	ND	10	µg/L
2-Methylnaphthalene	ND	10	µg/L
2-Methylphenol	ND	10	µg/L
4-Methylphenol	ND	10	µg/L
Naphthalene	ND	10	µg/L
Nitrobenzene	ND	10	µg/L
2-Nitrophenol	ND	10	µg/L
4-Nitrophenol	ND	20	µg/L
Di-n-octyl phthalate	ND	10	µg/L
Pentachlorophenol	ND	20	µg/L
Phenanthrene	ND	10	µg/L
Phenol	ND	10	µg/L
Pyrene	ND	10	µg/L
1,2,4-Trichlorobenzene	ND	10	µg/L
2,4,5-Trichlorophenol	ND	10	µg/L

Qualifiers: ND - Not Detected at the Reporting Limit
J - Analyte detected below quantitation limits
S - Spike Recovery outside accepted recovery limits
R - RPD outside accepted recovery limits
B - Analyte detected in the associated Method Blank
NA - Not applicable where J values or ND results occur
RL - Reporting Limit; defined as the lowest concentration the laboratory can accurately quantitate.

AMRQ Environmental Laboratories Corp.

Date: *30-Nov-10*

CLIENT: ARCADIS U.S., Inc.
Work Order: 1011055
Project: MA000690.0010.00005 Crane Weymouth MA

QC SUMMARY REPORT

Method Blank

2,4,6-Trichlorophenol	ND	10	µg/L						
Surr: 2-Fluorophenol	39.49	1.0	µg/L	75	0	52.7	15	110	0
Surr: Phenol-d5	24.3	1.0	µg/L	75	0	32.4	15	110	0
Surr: Nitrobenzene-d5	40.02	1.0	µg/L	50	0	80	30	130	0
Surr: 2-Fluorobiphenyl	41.5	1.0	µg/L	50	0	83	30	130	0
Surr: 2,4,6-Tribromophenol	62.74	1.0	µg/L	75	0	83.7	15	110	0
Surr: 4-Terphenyl-d14	50.95	1.0	µg/L	50	0	102	30	130	0

Qualifiers: ND - Not Detected at the Reporting Limit
J - Analyte detected below quantitation limits
S - Spike Recovery outside accepted recovery limits
R - RPD outside accepted recovery limits
B - Analyte detected in the associated Method Blank
NA - Not applicable where J values or ND results occur
RL - Reporting Limit; defined as the lowest concentration the laboratory can accurately quantitate.

AMRO Environmental Laboratories Corp.

Date: *30-Nov-10*

CLIENT: ARCADIS U.S., Inc.
Work Order: 1011055
Project: MA000690.0010.00005 Crane Weymouth MA

QC SUMMARY REPORT

Laboratory Control Spike

Sample ID **LCS-20830** Batch ID: **20830** Test Code: **SW8270C** Units: **µg/L** Analysis Date **11/19/10 1:13:00 PM** Prep Date **11/19/10**

Client ID: Run ID: **SV-2_101119A** SeqNo: **760636**

Analyte	QC Sample Result	RL	Units	QC Spike Amount	Original Sample Result	%REC	LowLimit	HighLimit	Original Sample or MS Result	%RPD	RPDLimit	Qua
Acenaphthene	43.38	10	µg/L	50	0	86.8	46	103	0			
Acenaphthylene	44.92	10	µg/L	50	0	89.8	40	111	0			
Acetophenone	40.51	10	µg/L	50	0	81	40	140	0			
Aniline	26.58	10	µg/L	50	0	53.2	40	140	0			
Anthracene	46.3	10	µg/L	50	0	92.6	51	118	0			
1,2-Diphenylhydrazine (as Azobe	45.66	10	µg/L	50	0	91.3	45	116	0			
Benz(a)anthracene	45.14	10	µg/L	50	0	90.3	50	117	0			
Benzo(a)pyrene	47.08	10	µg/L	50	0	94.2	62	110	0			
Benzo(b)fluoranthene	39.88	10	µg/L	50	0	79.8	60	105	0			
Benzo(k)fluoranthene	48.58	10	µg/L	50	0	97.2	58	116	0			
Benzo(g,h,i)perylene	51.13	10	µg/L	50	0	102	61	109	0			
4-Bromophenyl phenyl ether	43.2	10	µg/L	50	0	86.4	46	117	0			
Butyl benzyl phthalate	47.52	10	µg/L	50	0	95	46	121	0			
Di-n-butyl phthalate	49.05	10	µg/L	50	0	98.1	49	126	0			
4-Chloroaniline	40.86	10	µg/L	50	0	81.7	54	100	0			
Bis(2-chloroethoxy)methane	41.8	10	µg/L	50	0	83.6	52	103	0			
Bis(2-chloroethyl)ether	39.3	10	µg/L	50	0	78.6	44	100	0			
Bis(2-chloroisopropyl)ether	41.6	10	µg/L	50	0	83.2	47	127	0			
2-Chloronaphthalene	42.67	10	µg/L	50	0	85.3	40	109	0			
2-Chlorophenol	59.77	10	µg/L	75	0	79.7	48	93	0			
Chrysene	46.96	10	µg/L	50	0	93.9	63	107	0			
Dibenz(a,h)anthracene	50.7	10	µg/L	50	0	101	62	113	0			
Dibenzofuran	44.28	10	µg/L	50	0	88.6	52	106	0			
1,2-Dichlorobenzene	36.48	10	µg/L	50	0	73	40	93	0			
1,3-Dichlorobenzene	36.75	10	µg/L	50	0	73.5	40	90	0			

Qualifiers: ND - Not Detected at the Reporting Limit
J - Analyte detected below quantitation limits
RL - Reporting Limit; defined as the lowest concentration the laboratory can accurately quantitate.
S - Spike Recovery outside accepted recovery limits
R - RPD outside accepted recovery limits
B - Analyte detected in the associated Method Blank
NA - Not applicable where J values or ND results occur

AMRO Environmental Laboratories Corp.

Date: *30-Nov-10*

CLIENT: ARCADIS U.S., Inc.
Work Order: 1011055
Project: MA000690.0010.00005 Crane Weymouth MA

QC SUMMARY REPORT

Laboratory Control Spike

1,4-Dichlorobenzene	37.97	5.0	µg/L	50	0	75.9	40	92	0
3,3'-Dichlorobenzidine	45.25	10	µg/L	50	0	90.5	40	131	0
2,4-Dichlorophenol	61.55	10	µg/L	75	0	82.1	55	107	0
Diethyl phthalate	45.69	10	µg/L	50	0	91.4	40	125	0
Dimethyl phthalate	45.02	10	µg/L	50	0	90	40	140	0
2,4-Dimethylphenol	60.28	10	µg/L	75	0	80.4	46	97	0
2,4-Dinitrophenol	59.35	20	µg/L	75	0	79.1	30	130	0
2,4-Dinitrotoluene	46.17	10	µg/L	50	0	92.3	49	120	0
2,6-Dinitrotoluene	45.2	10	µg/L	50	0	90.4	61	115	0
Bis(2-ethylhexyl)phthalate	49.03	5.0	µg/L	50	0	98.1	43	133	0
Fluoranthene	49.48	10	µg/L	50	0	99	64	109	0
Fluorene	44.09	10	µg/L	50	0	88.2	45	114	0
Hexachlorobenzene	43.4	10	µg/L	50	0	86.8	47	120	0
Hexachlorobutadiene	35.05	10	µg/L	50	0	70.1	40	98	0
Hexachloroethane	35.36	5.0	µg/L	50	0	70.7	40	89	0
Indeno(1,2,3-cd)pyrene	50.28	10	µg/L	50	0	101	58	112	0
Isophorone	42.38	10	µg/L	50	0	84.8	54	103	0
2-Methylnaphthalene	39	10	µg/L	50	0	78	40	100	0
2-Methylphenol	53.45	10	µg/L	75	0	71.3	30	76	0
4-Methylphenol	65.04	10	µg/L	150	0	43.4	30	75	0
Naphthalene	40.61	10	µg/L	50	0	81.2	40	106	0
Nitrobenzene	40.53	10	µg/L	50	0	81.1	48	103	0
2-Nitrophenol	62.81	10	µg/L	75	0	83.7	48	108	0
4-Nitrophenol	26.95	20	µg/L	75	0	35.9	30	53	0
Di-n-octyl phthalate	48.24	10	µg/L	50	0	96.5	54	130	0
Pentachlorophenol	56.87	20	µg/L	75	0	75.8	40	110	0
Phenanthrene	46.27	10	µg/L	50	0	92.5	49	115	0
Phenol	23.65	10	µg/L	75	0	31.5	20	46	0
Pyrene	44.86	10	µg/L	50	0	89.7	55	109	0
1,2,4-Trichlorobenzene	38.86	10	µg/L	50	0	77.7	40	98	0
2,4,5-Trichlorophenol	64.67	10	µg/L	75	0	86.2	30	95	0

Qualifiers: ND - Not Detected at the Reporting Limit; S - Spike Recovery outside accepted recovery limits; B - Analyte detected in the associated Method Blank; J - Analyte detected below quantitation limits; R - RPD outside accepted recovery limits; NA - Not applicable where J values or ND results occur; RL - Reporting Limit; defined as the lowest concentration the laboratory can accurately quantitate.

AMRO Environmental Laboratories Corp.

Date: *30-Nov-10*

CLIENT: ARCADIS U.S., Inc.
Work Order: 1011055
Project: MA000690.0010.00005 Crane Weymouth MA

QC SUMMARY REPORT

Laboratory Control Spike

2,4,6-Trichlorophenol	65.78	10	µg/L	75	0	87.7	59	110	0
Surr: 2-Fluorophenol	37.21	1.0	µg/L	75	0	49.6	21	76	0
Surr: Phenol-d5	22.16	1.0	µg/L	75	0	29.5	15	50	0
Surr: Nitrobenzene-d5	41.52	1.0	µg/L	50	0	83	38	118	0
Surr: 2-Fluorobiphenyl	43.72	1.0	µg/L	50	0	87.4	39	109	0
Surr: 2,4,6-Tribromophenol	64.49	1.0	µg/L	75	0	86	45	110	0
Surr: 4-Terphenyl-d14	49.23	1.0	µg/L	50	0	98.5	39	128	0

Qualifiers: ND - Not Detected at the Reporting Limit
J - Analyte detected below quantitation limits
S - Spike Recovery outside accepted recovery limits
R - RPD outside accepted recovery limits
B - Analyte detected in the associated Method Blank
NA - Not applicable where J values or ND results occur
RL - Reporting Limit; defined as the lowest concentration the laboratory can accurately quantitate.

AMRO Environmental Laboratories Corp.

Date: *30-Nov-10*

CLIENT: ARCADIS U.S., Inc.
Work Order: 1011055
Project: MA000690.0010.00005 Crane Weymouth MA

QC SUMMARY REPORT

Laboratory Control Spike Duplicate

Sample ID **LCSD-20830** Batch ID: **20830** Test Code: **SW8270C** Units: **µg/L** Analysis Date **11/19/10 1:50:00 PM** Prep Date **11/19/10**

Client ID: Run ID: **SV-2_101119A** SeqNo: **760637**

Analyte	QC Sample Result	RL	Units	QC Spike Amount	Original Sample Result	%REC	LowLimit	HighLimit	Original Sample or MS Result	%RPD	RPDLimit	Qua
Acenaphthene	42.15	10	µg/L	50	0	84.3	46	103	43.38	2.88	20	
Acenaphthylene	44.22	10	µg/L	50	0	88.4	40	111	44.92	1.57	20	
Acetophenone	37.67	10	µg/L	50	0	75.3	40	140	40.51	7.27	20	
Aniline	29.22	10	µg/L	50	0	58.4	40	140	26.58	9.46	20	
Anthracene	46.84	10	µg/L	50	0	93.7	51	118	46.3	1.16	20	
1,2-Diphenylhydrazine (as Azobe	44.75	10	µg/L	50	0	89.5	45	116	45.66	2.01	20	
Benz(a)anthracene	45.61	10	µg/L	50	0	91.2	50	117	45.14	1.04	20	
Benzo(a)pyrene	47.33	10	µg/L	50	0	94.7	62	110	47.08	0.53	20	
Benzo(b)fluoranthene	40.24	10	µg/L	50	0	80.5	60	105	39.88	0.899	20	
Benzo(k)fluoranthene	47.61	10	µg/L	50	0	95.2	58	116	48.58	2.02	20	
Benzo(g,h,i)perylene	51.95	10	µg/L	50	0	104	61	109	51.13	1.59	20	
4-Bromophenyl phenyl ether	43.3	10	µg/L	50	0	86.6	46	117	43.2	0.231	20	
Butyl benzyl phthalate	47.68	10	µg/L	50	0	95.4	46	121	47.52	0.336	20	
Di-n-butyl phthalate	47.6	10	µg/L	50	0	95.2	49	126	49.05	3	20	
4-Chloroaniline	40.84	10	µg/L	50	0	81.7	54	100	40.86	0.049	20	
Bis(2-chloroethoxy)methane	41.32	10	µg/L	50	0	82.6	52	103	41.8	1.15	20	
Bis(2-chloroethyl)ether	37.36	10	µg/L	50	0	74.7	44	100	39.3	5.06	20	
Bis(2-chloroisopropyl)ether	38.78	10	µg/L	50	0	77.6	47	127	41.6	7.02	20	
2-Chloronaphthalene	41.77	10	µg/L	50	0	83.5	40	109	42.67	2.13	20	
2-Chlorophenol	57.14	10	µg/L	75	0	76.2	48	93	59.77	4.5	20	
Chrysene	47.06	10	µg/L	50	0	94.1	63	107	46.96	0.213	20	
Dibenz(a,h)anthracene	50.1	10	µg/L	50	0	100	62	113	50.7	1.19	20	
Dibenzofuran	43.51	10	µg/L	50	0	87	52	106	44.28	1.75	20	
1,2-Dichlorobenzene	34.38	10	µg/L	50	0	68.8	40	93	36.48	5.93	20	
1,3-Dichlorobenzene	34.78	10	µg/L	50	0	69.6	40	90	36.75	5.51	20	

Qualifiers: ND - Not Detected at the Reporting Limit; S - Spike Recovery outside accepted recovery limits; B - Analyte detected in the associated Method Blank; J - Analyte detected below quantitation limits; R - RPD outside accepted recovery limits; NA - Not applicable where J values or ND results occur; RL - Reporting Limit; defined as the lowest concentration the laboratory can accurately quantitate.

AMRO Environmental Laboratories Corp.

Date: *30-Nov-10*

CLIENT: ARCADIS U.S., Inc.
Work Order: 1011055
Project: MA000690.0010.00005 Crane Weymouth MA

QC SUMMARY REPORT

Laboratory Control Spike Duplicate

1,4-Dichlorobenzene	34.49	5.0	µg/L	50	0	69	40	92	37.97	9.61	20
3,3'-Dichlorobenzidine	45.89	10	µg/L	50	0	91.8	40	131	45.25	1.4	20
2,4-Dichlorophenol	62.16	10	µg/L	75	0	82.9	55	107	61.55	0.986	20
Diethyl phthalate	44.86	10	µg/L	50	0	89.7	40	125	45.69	1.83	20
Dimethyl phthalate	45.02	10	µg/L	50	0	90	40	140	45.02	0	20
2,4-Dimethylphenol	61.32	10	µg/L	75	0	81.8	46	97	60.28	1.71	20
2,4-Dinitrophenol	61.35	20	µg/L	75	0	81.8	30	130	59.35	3.31	20
2,4-Dinitrotoluene	47.13	10	µg/L	50	0	94.3	49	120	46.17	2.06	20
2,6-Dinitrotoluene	45.16	10	µg/L	50	0	90.3	61	115	45.2	0.0885	20
Bis(2-ethylhexyl)phthalate	48.18	5.0	µg/L	50	0	96.4	43	133	49.03	1.75	20
Fluoranthene	48.85	10	µg/L	50	0	97.7	64	109	49.48	1.28	20
Fluorene	44.27	10	µg/L	50	0	88.5	45	114	44.09	0.407	20
Hexachlorobenzene	44.93	10	µg/L	50	0	89.9	47	120	43.4	3.46	20
Hexachlorobutadiene	34.55	10	µg/L	50	0	69.1	40	98	35.05	1.44	20
Hexachloroethane	33	5.0	µg/L	50	0	66	40	89	35.36	6.9	20
Indeno(1,2,3-cd)pyrene	49.85	10	µg/L	50	0	99.7	58	112	50.28	0.859	20
Isophorone	42.36	10	µg/L	50	0	84.7	54	103	42.38	0.0472	20
2-Methylnaphthalene	38.17	10	µg/L	50	0	76.3	40	100	39	2.15	20
2-Methylphenol	52.2	10	µg/L	75	0	69.6	30	76	53.45	2.37	20
4-Methylphenol	63.9	10	µg/L	150	0	42.6	30	75	65.04	1.77	20
Naphthalene	38.32	10	µg/L	50	0	76.6	40	106	40.61	5.8	20
Nitrobenzene	39.77	10	µg/L	50	0	79.5	48	103	40.53	1.89	20
2-Nitrophenol	60.26	10	µg/L	75	0	80.3	48	108	62.81	4.14	20
4-Nitrophenol	27.86	20	µg/L	75	0	37.1	30	53	26.95	3.32	20
Di-n-octyl phthalate	50.11	10	µg/L	50	0	100	54	130	48.24	3.8	20
Pentachlorophenol	55.72	20	µg/L	75	0	74.3	40	110	56.87	2.04	20
Phenanthrene	45.64	10	µg/L	50	0	91.3	49	115	46.27	1.37	20
Phenol	25.03	10	µg/L	75	0	33.4	20	46	23.65	5.67	20
Pyrene	45.31	10	µg/L	50	0	90.6	55	109	44.86	0.998	20
1,2,4-Trichlorobenzene	37.56	10	µg/L	50	0	75.1	40	98	38.86	3.4	20
2,4,5-Trichlorophenol	64.77	10	µg/L	75	0	86.4	30	95	64.67	0.155	20

Qualifiers: ND - Not Detected at the Reporting Limit; S - Spike Recovery outside accepted recovery limits; B - Analyte detected in the associated Method Blank; J - Analyte detected below quantitation limits; R - RPD outside accepted recovery limits; NA - Not applicable where J values or ND results occur; RL - Reporting Limit; defined as the lowest concentration the laboratory can accurately quantitate.

AMRO Environmental Laboratories Corp.

Date: *30-Nov-10*

CLIENT: ARCADIS U.S., Inc.
Work Order: 1011055
Project: MA000690.0010.00005 Crane Weymouth MA

QC SUMMARY REPORT

Laboratory Control Spike Duplicate

2,4,6-Trichlorophenol	65.16	10	µg/L	75	0	86.9	59	110	65.78	0.947	20
Surr: 2-Fluorophenol	33.4	1.0	µg/L	75	0	44.5	21	76	0	0	0
Surr: Phenol-d5	21.5	1.0	µg/L	75	0	28.7	15	50	0	0	0
Surr: Nitrobenzene-d5	40.16	1.0	µg/L	50	0	80.3	38	118	0	0	0
Surr: 2-Fluorobiphenyl	40.35	1.0	µg/L	50	0	80.7	39	109	0	0	0
Surr: 2,4,6-Tribromophenol	61.53	1.0	µg/L	75	0	82	45	110	0	0	0
Surr: 4-Terphenyl-d14	47.22	1.0	µg/L	50	0	94.4	39	128	0	0	0

Qualifiers: ND - Not Detected at the Reporting Limit
J - Analyte detected below quantitation limits
RL - Reporting Limit; defined as the lowest concentration the laboratory can accurately quantitate.
S - Spike Recovery outside accepted recovery limits
R - RPD outside accepted recovery limits
B - Analyte detected in the associated Method Blank
NA - Not applicable where J values or ND results occur

AMRO Environmental Laboratories Corp.

Date: *24-Nov-10*

CLIENT:	ARCADIS U.S., Inc.	**Client Sample ID:**	Influent
Lab Order:	1011055	**Collection Date:**	11/16/2010 10:50:00 AM
Project:	MA000690.0010.00005 Crane Weymouth MA	**Matrix:**	AQUEOUS
Lab ID:	1011055-01B		

Analyses	Result	RL	Qual	Units	DF	Date Analyzed
EPA 8270C SEMIVOLATILE ORGANICS BY SIM		**SW8270C**				Analyst: **KA**
Pentachlorophenol	ND	1.0		µg/L	1	11/23/2010 2:15:00 PM
Surr: Nitrobenzene-d5	49.2	30-130		%REC	1	11/23/2010 2:15:00 PM
Surr: 2-Fluorobiphenyl	124	30-130		%REC	1	11/23/2010 2:15:00 PM
Surr: 4-Terphenyl-d14	98.2	30-130		%REC	1	11/23/2010 2:15:00 PM

AMRO Environmental Laboratories Corp.

Date: *30-Nov-10*

CLIENT: ARCADIS U.S., Inc.
Work Order: 1011055
Project: MA000690.0010.00005 Crane Weymouth MA

QC SUMMARY REPORT

Method Blank

Sample ID **MB-20830** Batch ID: **20830** Test Code: **SW8270C** Units: **µg/L** Analysis Date **11/23/10 12:25:00 PM** Prep Date **11/19/10**

Client ID: Run ID: **SV-2_101123A** SeqNo: **760749**

Analyte	QC Sample Result	RL	Units	QC Spike Amount	Original Sample Result	%REC	LowLimit	HighLimit	Original Sample or MS Result	%RPD	RPDLimit	Qua
Pentachlorophenol	ND	1.0	µg/L	0	0	0	0	0	0			
Surr: Nitrobenzene-d5	25.66	1.0	µg/L	50	0	51.3	30	130	0			
Surr: 2-Fluorobiphenyl	65.08	1.0	µg/L	50	0	130	30	130	0			S
Surr: 4-Terphenyl-d14	54.7	1.0	µg/L	50	0	109	30	130	0			

Qualifiers: ND - Not Detected at the Reporting Limit
J - Analyte detected below quantitation limits
RL - Reporting Limit; defined as the lowest concentration the laboratory can accurately quantitate.
S - Spike Recovery outside accepted recovery limits
R - RPD outside accepted recovery limits
B - Analyte detected in the associated Method Blank
NA - Not applicable where J values or ND results occur

AMRO Environmental Laboratories Corp.

Date: *30-Nov-10*

CLIENT: ARCADIS U.S., Inc.
Work Order: 1011055
Project: MA000690.0010.00005 Crane Weymouth MA

QC SUMMARY REPORT
Laboratory Control Spike

Sample ID **LCS-20830** Batch ID: **20830** Test Code: **SW8270C** Units: **µg/L** Analysis Date **11/23/10 1:01:00 PM** Prep Date **11/19/10**
Client ID: Run ID: **SV-2_101123A** SeqNo: **760750**

Analyte	QC Sample Result	RL	Units	QC Spike Amount	Original Sample Result	%REC	LowLimit	HighLimit	Original Sample or MS Result	%RPD	RPDLimit	Qua
Pentachlorophenol	7.52	1.0	µg/L	7.5	0	100	30	130	0			
Surr: Nitrobenzene-d5	2.405	1.0	µg/L	5	0	48.1	30	130	0			
Surr: 2-Fluorobiphenyl	6.455	1.0	µg/L	5	0	129	30	130	0			
Surr: 4-Terphenyl-d14	4.75	1.0	µg/L	5	0	95	30	130	0			

Sample ID **LCSD-20830** Batch ID: **20830** Test Code: **SW8270C** Units: **µg/L** Analysis Date **11/23/10 1:38:00 PM** Prep Date **11/19/10**
Client ID: Run ID: **SV-2_101123A** SeqNo: **760751**

Analyte	QC Sample Result	RL	Units	QC Spike Amount	Original Sample Result	%REC	LowLimit	HighLimit	Original Sample or MS Result	%RPD	RPDLimit	Qua
Pentachlorophenol	7.8	1.0	µg/L	7.5	0	104	30	130	7.52	3.66	20	
Surr: Nitrobenzene-d5	2.34	1.0	µg/L	5	0	46.8	30	130	0	0		
Surr: 2-Fluorobiphenyl	6.375	1.0	µg/L	5	0	128	30	130	0	0		
Surr: 4-Terphenyl-d14	4.82	1.0	µg/L	5	0	96.4	30	130	0	0		

Qualifiers: ND - Not Detected at the Reporting Limit
J - Analyte detected below quantitation limits
S - Spike Recovery outside accepted recovery limits
R - RPD outside accepted recovery limits
B - Analyte detected in the associated Method Blank
NA - Not applicable where J values or ND results occur
RL - Reporting Limit; defined as the lowest concentration the laboratory can accurately quantitate.

AMRO Environmental Laboratories Corp.

Date: *24-Nov-10*

CLIENT:	ARCADIS U.S., Inc.	**Client Sample ID:**	Influent
Lab Order:	1011055	**Collection Date:**	11/16/2010 10:50:00 AM
Project:	MA000690.0010.00005 Crane Weymouth MA	**Matrix:**	AQUEOUS
Lab ID:	1011055-01C		

Analyses	Result	RL	Qual	Units	DF	Date Analyzed
POLYCHLORINATED BIPHENYLS BY MCP METH SW8082						Analyst: KA
Aroclor 1262	ND	0.20		µg/L	1	11/19/2010 12:45:00 PM
Aroclor 1268	ND	0.20		µg/L	1	11/19/2010 12:45:00 PM
Aroclor 1016	ND	0.20		µg/L	1	11/19/2010 12:45:00 PM
Aroclor 1221	ND	0.20		µg/L	1	11/19/2010 12:45:00 PM
Aroclor 1232	ND	0.20		µg/L	1	11/19/2010 12:45:00 PM
Aroclor 1242	ND	0.20		µg/L	1	11/19/2010 12:45:00 PM
Aroclor 1248	ND	0.20		µg/L	1	11/19/2010 12:45:00 PM
Aroclor 1254	ND	0.20		µg/L	1	11/19/2010 12:45:00 PM
Aroclor 1260	ND	0.20		µg/L	1	11/19/2010 12:45:00 PM
Surr: Decachlorobiphenyl	114	30-150		%REC	1	11/19/2010 12:45:00 PM
Surr: Tetrachloro-m-xylene	82.9	30-150		%REC	1	11/19/2010 12:45:00 PM

AMRO Environmental Laboratories Corp.

Date: *30-Nov-10*

CLIENT: ARCADIS U.S., Inc.
Work Order: 1011055
Project: MA000690.0010.00005 Crane Weymouth MA

QC SUMMARY REPORT

Method Blank

Sample ID **MB-20829** Batch ID: **20829** Test Code: **SW8082** Units: **µg/L** Analysis Date **11/19/10 11:26:00 AM** Prep Date **11/18/10**

Client ID: Run ID: **GC-ELVIS_101119A** SeqNo: **760631**

Analyte	QC Sample Result	RL	Units	QC Spike Amount	Original Sample Result	%REC	LowLimit	HighLimit	Original Sample or MS Result	%RPD	RPDLimit	Qua
Aroclor 1262	ND	0.20	µg/L									
Aroclor 1268	ND	0.20	µg/L									
Aroclor 1016	ND	0.20	µg/L									
Aroclor 1221	ND	0.20	µg/L									
Aroclor 1232	ND	0.20	µg/L									
Aroclor 1242	ND	0.20	µg/L									
Aroclor 1248	ND	0.20	µg/L									
Aroclor 1254	ND	0.20	µg/L									
Aroclor 1260	ND	0.20	µg/L									
Surr: Decachlorobiphenyl	0.07592	0	µg/L	0.064	0	119	30	150	0			
Surr: Tetrachloro-m-xylene	0.05792	0	µg/L	0.064	0	90.5	30	150	0			

Qualifiers: ND - Not Detected at the Reporting Limit
J - Analyte detected below quantitation limits
S - Spike Recovery outside accepted recovery limits
R - RPD outside accepted recovery limits
B - Analyte detected in the associated Method Blank
NA - Not applicable where J values or ND results occur
RL - Reporting Limit; defined as the lowest concentration the laboratory can accurately quantitate.

AMRO Environmental Laboratories Corp.

Date: *30-Nov-10*

CLIENT: ARCADIS U.S., Inc.
Work Order: 1011055
Project: MA000690.0010.00005 Crane Weymouth MA

QC SUMMARY REPORT
Laboratory Control Spike

Sample ID **LCS-20829** Batch ID: **20829** Test Code: **SW8082** Units: **µg/L** Analysis Date **11/19/10 11:52:00 AM** Prep Date **11/18/10**
Client ID: Run ID: **GC-ELVIS_101119A** SeqNo: **760632**

Analyte	QC Sample Result	RL	Units	QC Spike Amount	Original Sample Result	%REC	LowLimit	HighLimit	Original Sample or MS Result	%RPD	RPDLimit	Qua
Aroclor 1016	3.48	0.20	µg/L	4	0	87	51	125	0			
Aroclor 1260	3.589	0.20	µg/L	4	0	89.7	50	133	0			
Surr: Decachlorobiphenyl	0.07448	0	µg/L	0.064	0	116	30	150	0			
Surr: Tetrachloro-m-xylene	0.05894	0	µg/L	0.064	0	92.1	30	150	0			

Sample ID **LCSD-20829** Batch ID: **20829** Test Code: **SW8082** Units: **µg/L** Analysis Date **11/19/10 12:19:00 PM** Prep Date **11/18/10**
Client ID: Run ID: **GC-ELVIS_101119A** SeqNo: **760633**

Analyte	QC Sample Result	RL	Units	QC Spike Amount	Original Sample Result	%REC	LowLimit	HighLimit	Original Sample or MS Result	%RPD	RPDLimit	Qua
Aroclor 1016	3.727	0.20	µg/L	4	0	93.2	51	125	3.48	6.84	50	
Aroclor 1260	3.776	0.20	µg/L	4	0	94.4	50	133	3.589	5.07	50	
Surr: Decachlorobiphenyl	0.07525	0	µg/L	0.064	0	118	30	150	0	0	0	
Surr: Tetrachloro-m-xylene	0.05904	0	µg/L	0.064	0	92.2	30	150	0	0	0	

Qualifiers: ND - Not Detected at the Reporting Limit; S - Spike Recovery outside accepted recovery limits; B - Analyte detected in the associated Method Blank
J - Analyte detected below quantitation limits; R - RPD outside accepted recovery limits; NA - Not applicable where J values or ND results occur
RL - Reporting Limit; defined as the lowest concentration the laboratory can accurately quantitate.

AMRO Environmental Laboratories Corp.

Date: *24-Nov-10*

CLIENT: ARCADIS U.S., Inc.
Project: MA000690.0010.00005 Crane Weymouth MA
Lab Order: 1011055

Lab ID: 1011055-01
Collection Date: 11/16/2010 10:50:00 AM
Collection Time:
Client Sample ID: Influent
Matrix: AQUEOUS

Analyses	Result	RL	Qual	Units	DF	Date Analyzed
ICP- TOTAL METALS BY 200.7		**E200.7**				Analyst: **AL**
Iron	180	100		µg/L	1	11/22/2010 6:51:38 PM
OIL & GREASE, TPH (NON-POLAR MATERIAL)		**E1664**				Analyst: **AL**
SGT-Hexane Extractable Material	ND	5.0		mg/L	1	11/18/2010

AMRO Environmental Laboratories Corp.

Date: *24-Nov-10*

CLIENT: ARCADIS U.S., Inc.
Work Order: 1011055
Project: MA000690.0010.00005 Crane Weymouth MA

QC SUMMARY REPORT
Method Blank

Sample ID **mb-20826** Batch ID: **20826** Test Code: **E200.7** Units: **µg/L** Analysis Date **11/22/10 6:05:13 PM** Prep Date **11/17/10**
Client ID: Run ID: **ICP-OPTIMA_101122A** SeqNo: **760816**

Analyte	QC Sample Result	RL	Units	QC Spike Amount	Original Sample Result	%REC	LowLimit	HighLimit	Original Sample or MS Result	%RPD	RPDLimit	Qua
Iron	ND	100	µg/L									

Sample ID **MB-R45793** Batch ID: **R45793** Test Code: **E1664** Units: **mg/L** Analysis Date **11/18/10** Prep Date
Client ID: Run ID: **ING-WET_101118D** SeqNo: **760623**

Analyte	QC Sample Result	RL	Units	QC Spike Amount	Original Sample Result	%REC	LowLimit	HighLimit	Original Sample or MS Result	%RPD	RPDLimit	Qua
SGT-Hexane Extractable Material	ND	5.0	mg/L									

Qualifiers: ND - Not Detected at the Reporting Limit
J - Analyte detected below quantitation limits
RL - Reporting Limit; defined as the lowest concentration the laboratory can accurately quantitate.
S - Spike Recovery outside accepted recovery limits
R - RPD outside accepted recovery limits
B - Analyte detected in the associated Method Blank
NA - Not applicable where J values or ND results occur

AMRO Environmental Laboratories Corp.

Date: *24-Nov-10*

CLIENT: ARCADIS U.S., Inc.
Work Order: 1011055
Project: MA000690.0010.00005 Crane Weymouth MA

QC SUMMARY REPORT

Laboratory Control Spike

Sample ID **lcs-20826** Batch ID: **20826** Test Code: **E200.7** Units: **µg/L** Analysis Date **11/22/10 6:09:41 PM** Prep Date **11/17/10**
Client ID: Run ID: **ICP-OPTIMA_101122A** SeqNo: **760817**

Analyte	QC Sample Result	RL	Units	QC Spike Amount	Original Sample Result	%REC	LowLimit	HighLimit	Original Sample or MS Result	%RPD	RPDLimit	Qua
Iron	4449	100	µg/L	4004	0	111	85	115	0			

Sample ID **LCS-R45793** Batch ID: **R45793** Test Code: **E1664** Units: **mg/L** Analysis Date **11/18/10** Prep Date
Client ID: Run ID: **ING-WET_101118D** SeqNo: **760624**

Analyte	QC Sample Result	RL	Units	QC Spike Amount	Original Sample Result	%REC	LowLimit	HighLimit	Original Sample or MS Result	%RPD	RPDLimit	Qua
SGT-Hexane Extractable Material	18.2	5.0	mg/L	20	0	91	42.4	144	0			

Qualifiers: ND - Not Detected at the Reporting Limit
J - Analyte detected below quantitation limits
RL - Reporting Limit; defined as the lowest concentration the laboratory can accurately quantitate.
S - Spike Recovery outside accepted recovery limits
R - RPD outside accepted recovery limits
B - Analyte detected in the associated Method Blank
NA - Not applicable where J values or ND results occur

AMRO Environmental Laboratories Corporation

111 Herrick Street, Merrimack, NH 03054
TEL: (603) 424-2022 • FAX: (603) 429-8496
www.amrolabs.com

November 24, 2010

ANALYTICAL TEST RESULTS

Chuck Castelluccio
ARCADIS U.S., Inc.
2 Executive Drive
Suite 303
Chelmsford, MA 01824
TEL: 978-937-9999
FAX: (978) 937-7555

Subject: MA000690.0010.00005 Crane Weymouth MA Workorder No.: 1011056

Dear Chuck Castelluccio:

AMRO Environmental Laboratories Corp. received 4 samples on 11/16/2010 for the analyses presented in the following report.

AMRO is accredited in accordance with NELAC and certifies that these test results meet all the requirements of NELAC, where applicable, unless otherwise noted in the case narrative.

The enclosed Sample Receipt Checklist details the condition of your sample(s) upon receipt. Please be advised that any unused sample volume and sample extracts will be stored for a period of 60 days from sample receipt date (90 days for samples from New York). After this time, AMRO will properly dispose of the remaining sample(s). If you require further analysis, or need the samples held for a longer period, please contact us immediately.

This report consists of a total of 14 pages. This letter is an integral part of your data report. All results in this project relate only to the sample(s) as received by the laboratory and documented in the Chain-of-Custody. This report shall not be reproduced except in full, without the written approval of the laboratory. If you have any questions regarding this project in the future, please refer to the Workorder Number above.

Sincerely,

Nancy Stewart
Vice President

State Certifications: NH (NELAC): 1001, MA: M-NH012, CT: PH-0758, NY: 11278 (NELAC), ME: NH012 and 1001.

Hard copy of the State Certification is available upon request.

AMRO Environmental Laboratories Corp.

Date: *24-Nov-10*

CLIENT: ARCADIS U.S., Inc.
Project: MA000690.0010.00005 Crane Weymouth MA
Lab Order: 1011056
Date Received: 11/16/2010

Work Order Sample Summary

Lab Sample ID	Client Sample ID	Collection Date	Collection Time
1011056-01A	Influent	11/16/2010	10:30 AM
1011056-02A	CT-2 Effluent	11/16/2010	10:35 AM
1011056-03A	Effluent	11/16/2010	10:40 AM
1011056-04A	Trip Blank	11/16/2010	12:00 AM

AMRO Environmental Laboratories Corp.

24-Nov-10

Lab Order: 1011056
Client: ARCADIS U.S., Inc.
Project: MA000690.0010.00005 Crane We

DATES REPORT

Sample ID	Client Sample ID	Collection Date	Matrix	Analytical Test Name / Preparatory Test Name	Prep Date	Analysis Date / Batch ID	TCLP Date
1011056-01A	Influent	11/16/2010 10:30:00 AM	Aqueous	EPA 8260B HALOGENATED VOCs by GC/MS		11/19/2010	
				EPA 5030B	11/16/2010	R45797	
1011056-02A	CT-2 Effluent	11/16/2010 10:35:00 AM		EPA 8260B HALOGENATED VOCs by GC/MS		11/19/2010	
					11/16/2010	R45797	
1011056-03A	Effluent	11/16/2010 10:40:00 AM		EPA 8260B HALOGENATED VOCs by GC/MS		11/19/2010	
					11/16/2010	R45797	
1011056-04A	Trip Blank	11/16/2010		EPA 8260B HALOGENATED VOCs by GC/MS		11/19/2010	
					11/16/2010	R45797	

ARCADIS
Infrastructure, environment, buildings

ID#:

CHAIN OF CUSTODY & LABORATORY ANALYSIS REQUEST FORM

Page 1 of 1

Lab Work Order # 1011056

Send Results to:

Contact & Company Name: Arcadis
Telephone: 9789379999
Address: 2 Executive Dr #323
Fax: 9789377555
City: Chelmsford State: MA Zip: 01824
E-mail Address: PM Chuck Castelluccio
Project Name/Location (City, State): Crane - Weymouth MA
Project #: MA000690.0010.00005
Sampler's Printed Name: Diane Champagne
Sampler's Signature: Diane Champagne

Preservative	B							
Filtered (✓)								
# of Containers	2							
Container Information	1							

PARAMETER ANALYSIS & METHOD

Sample ID	Collection Date	Collection Time	Type (✓) Comp	Type (✓) Grab	Matrix	VOC 8260B							REMARKS
Influent	11-16-10	1030	~~✓~~ CP	✓	W	2							
CT-2 Effluent	↓	1035	~~✓~~	✓	W	2							
Effluent	↓	1040	~~✓~~	✓	W	2							
Trip Blank	—	—	—	—	W	1							

Keys

Preservation Key:
A. H_2SO_4
B. HCL
C. HNO
D. NaOH
E. None
F. Other: _____
G. Other: _____
H. Other: _____

Container Information Key:
1. 40 ml Vial
2. 1 L Amber
3. 250 ml Plastic
4. 500 ml Plastic
5. Encore
6. 2 oz. Glass
7. 4 oz. Glass
8. 8 oz. Glass
9. Other: _____
10. Other: _____

Matrix Key:
SO - Soil, SE - Sediment, NL - NAPL/Oil, W - Water, SL - Sludge, SW - Sample Wipe, T - Tissue, A - Air, Other: _____

Special Instructions/Comments:
Monthly System Samples / MCP Case Narrative, Presumptive Certainty

☐ Special QA/QC Instructions(✓):

Laboratory Information and Receipt		Relinquished By	Received By	Relinquished By	Laboratory Received By
Lab Name: AMRO	Cooler Custody Seal (✓)	Printed Name: Diane Champagne	Printed Name: William H D Avison	Printed Name: William D Avison	Printed Name: Michael Gaudreau
☐ Cooler packed with ice (✓)	☐ Intact ☐ Not Intact	Signature: Diane Champagne	Signature: [illegible]	Signature: [illegible]	Signature: [illegible]
Specify Turnaround Requirements: Standard	Sample Receipt:	Firm: Arcadis	Firm/Courier: AMRO	Firm/Courier: AMRO	Firm: AMRO
Shipping Tracking #:	Condition/Cooler Temp: _____	Date/Time: 11/16/10 1110	Date/Time: 11-16-10 1110	Date/Time: 11-16-10 1132	Date/Time: 11-16-10 1210

Distribution: WHITE – Laboratory returns with results YELLOW – Lab copy PINK – Retained by ARCADIS

AMRO Environmental Laboratories Corporation

SAMPLE RECEIPT CHECKLIST

111 Herrick Street
Merrimack, NH 03054
(603) 424-2022

Client: Arcadis	AMRO ID: 1011056
Project Name: Crane Weymouth MA	Date Rec.: 11-16-10
Ship via: (circle one) Fed Ex., UPS, AMRO Courier, Hand Del., Other Courier, Other:	Date Due: 11-23-10

Items to be Checked Upon Receipt	Yes	No	NA	Comments
1. Army Samples received in individual plastic bags?			✓	
2. Custody Seals present?			✓	
3. Custody Seals Intact?			✓	
4. Air Bill included in folder if received?			✓	
5. Is COC included with samples?	✓			
6. Is COC signed and dated by client?	✓			
7. Laboratory receipt temperature. TEMP = 10				
Samples rec. with ice X ice packs___ neither___				
8. Were samples received the same day they were sampled?	✓			
Is client temperature = or <6°C ?	✓			
If no obtain authorization from the client for the analyses.				
Client authorization from: Date: Obtained by:				
9. Is the COC filled out correctly and completely?	✓			
10. Does the info on the COC match the samples?	✓			
11. Were samples rec. within holding time?	✓			
12. Were all samples properly labeled?	✓			
13. Were all samples properly preserved?	✓			
14. Were proper sample containers used?	✓			
15. Were all samples received intact? (none broken or leaking)	✓			
16. Were VOA vials rec. with no air bubbles?	✓			
17. Were the sample volumes sufficient for requested analysis?	✓			
18. Were all samples received?	✓			
19. VPH and VOA Soils only:			✓	
Sampling Method VPH (circle one): M=Methanol, E=EnCore (air-tight container)				
Sampling Method VOA (circle one): M=Methanol, SB=Sodium Bisulfate, E=EnCore, B=Bulk				
If M or SB:				
Does preservative cover the soil?				
If NO then client must be faxed.				
Does preservation level come close to the fill line on the vial?				
If NO then client must be faxed.				
Were vials provided by AMRO?				
If NO then weights MUST be obtained from client				
Was dry weight aliquot provided?				
If NO then fax client and inform the VOA lab ASAP.				
20. Subcontracted Samples:			✓	
What samples sent:				
Where sent:				
Date:				
Analysis:				
TAT:				
21. Information entered into:				
Internal Tracking Log?	✓			
Dry Weight Log?			✓	
Client Log?			✓	
Composite Log?			✓	
Filtration Log?			✓	

Received By: MG	Date: 11-16-10	Logged in By: MM	Date: 11-16-10
Labeled By: MM	Date: 11-16-10	Checked By: MG	Date: 11-17-10

NA= Not Applicable

AMRO Environmental
Laboratories Corporation

111 Herrick Street
Merrimack, NH 03054
(603) 424-2022

Please Circle if:
Sample= Soil
Sample= Waste

AMRO ID: 1011055

Sample ID	Analysis	Volume Sample	Preserv. Listed	Initial pH*	Acceptable? Y or N	List Preserv. Added by AMRO	Solution ID # of Preserv.	Volume Preservative Added	Final adjusted pH	Final adjusted pH (after 16 or 24 hours)
~~01A→03~~										
01A→03A	8260	2,40mL	HCl	—	—					
04A	8260	40mL	HCl	—	—					

** = if the laboratory preserves the drinking water sample (s) for EPA Method 200 series, sample (s) should be held at least 16 hours prior to analysis or 24 hours for water sample (s).*

pH Checked By: _____ Date: _____ pH adjusted By: _____ Date: _____

pH Checked By: _____ Date: _____ pH adj.(16 or 24hrs)By: _____ Date: _____

CASE NARRATIVE

GC/MS VOLATILES:

1. A short list of halogenated volatile organic compounds is reported per client request.

2. No QC deviations were observed.

MassDEP Analytical Protocol Certification Form

Laboratory Name: AMRO Environmental Lab. Corp. Project #: MA000690.0010.00005

Project Location: Crane Weymouth RTN:

This Form provides certifications for the following data set: list Laboratory Sample ID Number(s):

Matrices: Groundwater/Surface Water Soil/Sediment Drinking Water Air Other:

CAM Protocol (check all that apply below):

8260 VOC CAM II A ✓	7470/7471 Hg CAM III B	MassDEP VPH CAM IV A	8081 Pesticides CAM V B	7196 Hex Cr CAM VI B	MassDEP APH CAM IX A
8270 SVOC CAM II B	7010 Metals CAM III C	MassDEP EPH CAM IV B	8151 Herbicides CAM V C	8330 Explosives CAM VIII A	TO-15 VOC CAM IX B
6010 Metals CAM III A	6020 Metals CAM III D	8082 PCB CAM V A	9014 Total Cyanide/PAC CAM VI A	6860 Perchlorate CAM VIII B	

Affirmative Responses to Questions A through F are required for "Presumptive Certainty" status

A	Were all samples received in a condition consistent with those described on the Chain-of-Custody, properly preserved (including temperature) in the field or laboratory, and prepared/analyzed within method holding times?	Yes No
B	Were the analytical method(s) and all associated QC requirements specified in the selected CAM protocol(s) followed?	Yes No
C	Were all required corrective actions and analytical response actions specified in the selected CAM protocol(s) implemented for all identified performance standard non-conformances?	Yes No
D	Does the laboratory report comply with all the reporting requirements specified in CAM VII A, "Quality Assurance and Quality Control Guidelines for the Acquisition and Reporting of Analytical Data"?	Yes No
E	VPH, EPH, APH, and TO-15 only: a. VPH, EPH, and APH Methods only: Was each method conducted without significant modification(s)? (Refer to the individual method(s) for a list of significant modifications). b. APH and TO-15 Methods only: Was the complete analyte list reported for each method?	Yes No N/A Yes No
F	Were all applicable CAM protocol QC and performance standard non-conformances identified and evaluated in a laboratory narrative (including all "No" responses to Questions A through E)?	Yes No

Responses to Questions G, H and I below are required for "Presumptive Certainty" status

G	Were the reporting limits at or below all CAM reporting limits specified in the selected CAM protocol(s)?	Yes No[1]

***Data User Note:** Data that achieve "Presumptive Certainty" status may not necessarily meet the data usability and representativeness requirements described in 310 CMR 40. 1056 (2)(k) and WSC-07-350.*

H	Were **all** QC performance standards specified in the CAM protocol(s) achieved?	Yes No[1]
I	Were results reported for the complete analyte list specified in the selected CAM protocol(s)?	Yes No[1]

[1] *All negative responses must be addressed in an attached laboratory narrative.*

I, the undersigned, attest under the pains and penalties of perjury that, based upon my personal inquiry of those responsible for obtaining the information, the material contained in this analytical report is, to the best of my knowledge and belief, accurate and complete.

Signature: [signature] **Position:** Vice President

Printed Name: Nancy Stewart **Date:** 11-26-10

DATA COMMENT PAGE

Organic Data Qualifiers

ND	Indicates compound was analyzed for, but not detected at or above the reporting limit.
J	Indicates an estimated value. This flag is used either when estimating a concentration for tentatively identified compounds where a 1:1 response is assumed, or when the data indicates the presence of a compound that meets the identification criteria but the result is less than the sample quantitation limit but greater than the method detection limit.
H	Method prescribed holding time exceeded.
E	This flag identifies compounds whose concentrations exceed the calibration range of the instrument for that specific analysis.
B	This flag is used when the analyte is found in the associated blank as well as in the sample.
R	RPD outside accepted recovery limits
RL	Reporting limit; defined as the lowest concentration the laboratory can accurately quantitate.
S	Spike Recovery outside accepted recovery limits.
#	See Case Narrative

Micro Data Qualifiers

TNTC	Too numerous to count

Inorganic Data Qualifiers

ND or U	Indicates element was analyzed for, but not detected at or above the reporting limit.
J	Indicates a value greater than or equal to the method detection limit, but less than the quantitation limit.
H	Indicates analytical holding time exceedance.
B	Indicates that the analyte is found in the associated blank, as well as in the sample.
MSA	Indicates value determined by the Method of Standard Addition
E	This flag identifies compounds whose concentrations exceed the calibration range of the instrument for that specific analysis.
R	RPD outside accepted recovery limits
RL	Reporting limit; defined as the lowest concentration the laboratory can accurately quantitate.
S	Spike Recovery outside accepted recovery limits.
W	Post-digestion spike for Furnace AA analysis is out of control limits (85-115), while sample absorbance is less than 50% of spike absorbance.
*	Duplicate analysis not within control limits.
+	Indicates the correlation coefficient for the Method of Standard Addition is less than 0.995
#	See Case Narrative

Report Comments:

1. Soil, sediment and sludge sample results are reported on a "dry weight" basis.
2. Reporting limits are adjusted for sample size used, dilutions and moisture content, if applicable.

AMRO Environmental Laboratories Corp.

Date: *24-Nov-10*

CLIENT: ARCADIS U.S., Inc.
Project: MA000690.0010.00005 Crane Weymouth MA
Lab Order: 1011056

Lab ID: 1011056-01
Collection Date: 11/16/2010 10:30:00 AM
Collection Time:
Client Sample ID: Influent
Matrix: AQUEOUS

Analyses	Result	RL	Qual	Units	DF	Date Analyzed
EPA 8260B HALOGENATED VOLATILES BY GC/M SW8260B						Analyst: SK
Vinyl chloride	ND	2.0		µg/L	1	11/19/2010 8:29:00 PM
1,1-Dichloroethene	ND	1.0		µg/L	1	11/19/2010 8:29:00 PM
trans-1,2-Dichloroethene	ND	2.0		µg/L	1	11/19/2010 8:29:00 PM
1,1-Dichloroethane	2.6	2.0		µg/L	1	11/19/2010 8:29:00 PM
cis-1,2-Dichloroethene	55	2.0		µg/L	1	11/19/2010 8:29:00 PM
1,1,1-Trichloroethane	ND	2.0		µg/L	1	11/19/2010 8:29:00 PM
Trichloroethene	33	2.0		µg/L	1	11/19/2010 8:29:00 PM
Tetrachloroethene	ND	2.0		µg/L	1	11/19/2010 8:29:00 PM
Surr: Dibromofluoromethane	111	70-130		%REC	1	11/19/2010 8:29:00 PM
Surr: 1,2-Dichloroethane-d4	117	70-130		%REC	1	11/19/2010 8:29:00 PM
Surr: Toluene-d8	107	70-130		%REC	1	11/19/2010 8:29:00 PM
Surr: 4-Bromofluorobenzene	112	70-130		%REC	1	11/19/2010 8:29:00 PM

Lab ID: 1011056-02
Collection Date: 11/16/2010 10:35:00 AM
Collection Time:
Client Sample ID: CT-2 Effluent
Matrix: AQUEOUS

Analyses	Result	RL	Qual	Units	DF	Date Analyzed
EPA 8260B HALOGENATED VOLATILES BY GC/M SW8260B						Analyst: SK
Vinyl chloride	ND	2.0		µg/L	1	11/19/2010 7:55:00 PM
1,1-Dichloroethene	ND	1.0		µg/L	1	11/19/2010 7:55:00 PM
trans-1,2-Dichloroethene	ND	2.0		µg/L	1	11/19/2010 7:55:00 PM
1,1-Dichloroethane	5.7	2.0		µg/L	1	11/19/2010 7:55:00 PM
cis-1,2-Dichloroethene	57	2.0		µg/L	1	11/19/2010 7:55:00 PM
1,1,1-Trichloroethane	ND	2.0		µg/L	1	11/19/2010 7:55:00 PM
Trichloroethene	ND	2.0		µg/L	1	11/19/2010 7:55:00 PM
Tetrachloroethene	ND	2.0		µg/L	1	11/19/2010 7:55:00 PM
Surr: Dibromofluoromethane	108	70-130		%REC	1	11/19/2010 7:55:00 PM
Surr: 1,2-Dichloroethane-d4	114	70-130		%REC	1	11/19/2010 7:55:00 PM
Surr: Toluene-d8	106	70-130		%REC	1	11/19/2010 7:55:00 PM
Surr: 4-Bromofluorobenzene	115	70-130		%REC	1	11/19/2010 7:55:00 PM

AMRO Environmental Laboratories Corp.

Date: *24-Nov-10*

CLIENT: ARCADIS U.S., Inc.
Project: MA000690.0010.00005 Crane Weymouth MA
Lab Order: 1011056

Lab ID: 1011056-03
Collection Date: 11/16/2010 10:40:00 AM
Collection Time:
Client Sample ID: Effluent
Matrix: AQUEOUS

Analyses	Result	RL	Qual	Units	DF	Date Analyzed
EPA 8260B HALOGENATED VOLATILES BY GC/M SW8260B						Analyst: SK
Vinyl chloride	ND	2.0		µg/L	1	11/19/2010 7:22:00 PM
1,1-Dichloroethene	ND	1.0		µg/L	1	11/19/2010 7:22:00 PM
trans-1,2-Dichloroethene	ND	2.0		µg/L	1	11/19/2010 7:22:00 PM
1,1-Dichloroethane	3.6	2.0		µg/L	1	11/19/2010 7:22:00 PM
cis-1,2-Dichloroethene	ND	2.0		µg/L	1	11/19/2010 7:22:00 PM
1,1,1-Trichloroethane	ND	2.0		µg/L	1	11/19/2010 7:22:00 PM
Trichloroethene	ND	2.0		µg/L	1	11/19/2010 7:22:00 PM
Tetrachloroethene	ND	2.0		µg/L	1	11/19/2010 7:22:00 PM
Surr: Dibromofluoromethane	111	70-130		%REC	1	11/19/2010 7:22:00 PM
Surr: 1,2-Dichloroethane-d4	113	70-130		%REC	1	11/19/2010 7:22:00 PM
Surr: Toluene-d8	107	70-130		%REC	1	11/19/2010 7:22:00 PM
Surr: 4-Bromofluorobenzene	98.7	70-130		%REC	1	11/19/2010 7:22:00 PM

Lab ID: 1011056-04
Collection Date: 11/16/2010
Collection Time:
Client Sample ID: Trip Blank
Matrix: AQUEOUS

Analyses	Result	RL	Qual	Units	DF	Date Analyzed
EPA 8260B HALOGENATED VOLATILES BY GC/M SW8260B						Analyst: SK
Vinyl chloride	ND	2.0		µg/L	1	11/19/2010 3:23:00 PM
1,1-Dichloroethene	ND	1.0		µg/L	1	11/19/2010 3:23:00 PM
trans-1,2-Dichloroethene	ND	2.0		µg/L	1	11/19/2010 3:23:00 PM
1,1-Dichloroethane	ND	2.0		µg/L	1	11/19/2010 3:23:00 PM
cis-1,2-Dichloroethene	ND	2.0		µg/L	1	11/19/2010 3:23:00 PM
1,1,1-Trichloroethane	ND	2.0		µg/L	1	11/19/2010 3:23:00 PM
Trichloroethene	ND	2.0		µg/L	1	11/19/2010 3:23:00 PM
Tetrachloroethene	ND	2.0		µg/L	1	11/19/2010 3:23:00 PM
Surr: Dibromofluoromethane	105	70-130		%REC	1	11/19/2010 3:23:00 PM
Surr: 1,2-Dichloroethane-d4	117	70-130		%REC	1	11/19/2010 3:23:00 PM
Surr: Toluene-d8	107	70-130		%REC	1	11/19/2010 3:23:00 PM
Surr: 4-Bromofluorobenzene	116	70-130		%REC	1	11/19/2010 3:23:00 PM

AMRO Environmental Laboratories Corp.

Date: *22-Nov-10*

CLIENT: ARCADIS U.S., Inc.
Work Order: 1011056
Project: MA000690.0010.00005 Crane Weymouth MA

QC SUMMARY REPORT

Method Blank

Sample ID: **mb-11/19/10** Batch ID: **R45797** Test Code: **SW8260B** Units: **µg/L** Analysis Date: **11/19/2010 2:15:00 PM** Prep Date: **11/19/2010**

Client ID: Run ID: **V-3_101119A** SeqNo: **760661**

Analyte	QC Sample Result	RL	Units	QC Spike Amount	Original Sample Result	%REC	LowLimit	HighLimit	Original Sample or MS Result	%RPD	RPDLimit	Qua
Vinyl chloride	ND	2.0	µg/L									
1,1-Dichloroethene	ND	1.0	µg/L									
trans-1,2-Dichloroethene	ND	2.0	µg/L									
1,1-Dichloroethane	ND	2.0	µg/L									
cis-1,2-Dichloroethene	ND	2.0	µg/L									
1,1,1-Trichloroethane	ND	2.0	µg/L									
Trichloroethene	ND	2.0	µg/L									
Tetrachloroethene	ND	2.0	µg/L									
Surr: Dibromofluoromethane	27.63	2.0	µg/L	25	0	111	70	130	0			
Surr: 1,2-Dichloroethane-d4	29.96	2.0	µg/L	25	0	120	70	130	0			
Surr: Toluene-d8	27.03	2.0	µg/L	25	0	108	70	130	0			
Surr: 4-Bromofluorobenzene	24.98	2.0	µg/L	25	0	99.9	70	130	0			

Qualifiers: ND - Not Detected at the Reporting Limit
S - Spike Recovery outside accepted recovery limits
B - Analyte detected in the associated Method Blank
J - Analyte detected below quantitation limits
R - RPD outside accepted recovery limits
NA - Not applicable where J values or ND results occur
RL - Reporting Limit; defined as the lowest concentration the laboratory can accurately quantitate.

AMRO Environmental Laboratories Corp.

Date: *22-Nov-10*

CLIENT: ARCADIS U.S., Inc.
Work Order: 1011056
Project: MA000690.0010.00005 Crane Weymouth MA

QC SUMMARY REPORT

Laboratory Control Spike - Full List

Sample ID: **lcs-11/19/10** Batch ID: **R45797** Test Code: **SW8260B** Units: **µg/L** Analysis Date: **11/19/2010 12:32:00 P** Prep Date: **11/19/2010**

Client ID: Run ID: **V-3_101119A** SeqNo: **760663**

Analyte	QC Sample Result	RL	Units	QC Spike Amount	Original Sample Result	%REC	LowLimit	HighLimit	Original Sample or MS Result	%RPD	RPDLimit	Qua
Vinyl chloride	21.51	2.0	µg/L	20	0	108	70	130	0			
1,1-Dichloroethene	19.98	1.0	µg/L	20	0	99.9	70	130	0			
trans-1,2-Dichloroethene	19.65	2.0	µg/L	20	0	98.2	70	130	0			
1,1-Dichloroethane	19.25	2.0	µg/L	20	0	96.2	70	130	0			
cis-1,2-Dichloroethene	18.88	2.0	µg/L	20	0	94.4	70	130	0			
1,1,1-Trichloroethane	21.87	2.0	µg/L	20	0	109	70	130	0			
Trichloroethene	21.96	2.0	µg/L	20	0	110	70	130	0			
Tetrachloroethene	21.8	2.0	µg/L	20	0	109	70	130	0			
Surr: Dibromofluoromethane	26.5	2.0	µg/L	25	0	106	70	130	0			
Surr: 1,2-Dichloroethane-d4	29.69	2.0	µg/L	25	0	119	70	130	0			
Surr: Toluene-d8	26.3	2.0	µg/L	25	0	105	70	130	0			
Surr: 4-Bromofluorobenzene	30.81	2.0	µg/L	25	0	123	70	130	0			

Qualifiers: ND - Not Detected at the Reporting Limit
J - Analyte detected below quantitation limits
RL - Reporting Limit: defined as the lowest concentration the laboratory can accurately quantitate.
S - Spike Recovery outside accepted recovery limits
R - RPD outside accepted recovery limits
B - Analyte detected in the associated Method Blank
NA - Not applicable where J values or ND results occur

AMRO Environmental Laboratories Corp.

Date: *22-Nov-10*

CLIENT: ARCADIS U.S., Inc.
Work Order: 1011056
Project: MA000690.0010.00005 Crane Weymouth MA

QC SUMMARY REPORT

Laboratory Control Spike Duplicate - Full List

Sample ID: **lcsd-11/19/10** Batch ID: **R45797** Test Code: **SW8260B** Units: **µg/L** Analysis Date: **11/19/2010 1:07:00 PM** Prep Date: **11/19/2010**

Client ID: Run ID: **V-3_101119A** SeqNo: **760662**

Analyte	QC Sample Result	RL	Units	QC Spike Amount	Original Sample Result	%REC	LowLimit	HighLimit	Original Sample or MS Result	%RPD	RPDLimit	Qua
Vinyl chloride	22.43	2.0	µg/L	20	0	112	70	130	21.51	4.19	20	
1,1-Dichloroethene	20.86	1.0	µg/L	20	0	104	70	130	19.98	4.31	20	
trans-1,2-Dichloroethene	20.43	2.0	µg/L	20	0	102	70	130	19.65	3.89	20	
1,1-Dichloroethane	20.23	2.0	µg/L	20	0	101	70	130	19.25	4.96	20	
cis-1,2-Dichloroethene	18.49	2.0	µg/L	20	0	92.5	70	130	18.88	2.09	20	
1,1,1-Trichloroethane	22.08	2.0	µg/L	20	0	110	70	130	21.87	0.956	20	
Trichloroethene	22.84	2.0	µg/L	20	0	114	70	130	21.96	3.93	20	
Tetrachloroethene	22.01	2.0	µg/L	20	0	110	70	130	21.8	0.959	20	
Surr: Dibromofluoromethane	26.92	2.0	µg/L	25	0	108	70	130	0	0	0	
Surr: 1,2-Dichloroethane-d4	29.83	2.0	µg/L	25	0	119	70	130	0	0	0	
Surr: Toluene-d8	26.92	2.0	µg/L	25	0	108	70	130	0	0	0	
Surr: 4-Bromofluorobenzene	30.89	2.0	µg/L	25	0	124	70	130	0	0	0	

Qualifiers: ND - Not Detected at the Reporting Limit
S - Spike Recovery outside accepted recovery limits
B - Analyte detected in the associated Method Blank
J - Analyte detected below quantitation limits
R - RPD outside accepted recovery limits
NA - Not applicable where J values or ND results occur
RL - Reporting Limit; defined as the lowest concentration the laboratory can accurately quantitate.