EBI CONSULTING
www.ebiconsulting.com

21 B Street
Burlington, MA 01803
Tel: (781) 273.2500
Fax: (781) 273.3311

By email NPDES.Generalpermits@epa.gov

May 7, 2009

MAY 12 2009

MAG910417

US Environmental Protection Agency
Ms. Ann Herrick
Industrial NPDES Permits (CIP)
1 Congress Street, Suite 1100
Boston, MA 02114-2023

Subject: Submittal of NPDES Notice of Intent (NOI) under the Remediation General Permit (RGP)
For Discharge from Proposed Groundwater Pumping and Treatment System
At 120 Tremont Street, Everett, Massachusetts
MADEP Release Tracking Number 3-10153

Dear Ms. Herrick:

EnviroBusiness Inc. (DBA EBI Consulting or EBI) submits this NPDES Notice of Intent (NOI) under the Remediation General Permit (RGP) on behalf of our clients Frank and Jacquelyn DeMarco. This NOI will be for the proposed discharge from a groundwater pumping and treatment system at 120 Tremont Street in Everett, Massachusetts to an onsite stormwater catchbasin, to the municipal storm water sewer ultimately discharging into the Malden River. This groundwater remediation is being performed under 310 CMR 40.000, "The Massachusetts Contingency Plan" or MCP. It is our hope to commence discharge during May of 2009.

Attached to this document please find the completed "Suggested Form for Notice of Intent (NOI) for the Remediation General Permit along with the following attachments:

1. Line Drawing of System (Figure 5 Remedial Design Schematic)
2. NPDES NOI Dilution Calculation
3. USGS Topographic Map showing limits of Drainage Basin
4. Detailed Map of Receiving Water
5. Site Plan showing locations of storm sewer and sanitary sewer in proximity to the Site
6. USGS Topographic Map
7. Massachusetts GIS Map
8. NPDES NOI Mass Calculation
9. Analytical data sheets
10. Letter from Division of Fisheries and Wildlife
11. Letter from Massachusetts Historical Commission

If you have any questions or require additional information pertaining to this submittal, please contact the undersigned at (781) 418-2321 or by email at mpenzo@ebiconsulting.com.

Sincerely,
EBI CONSULTING

Michael A. Penzo

Michael A. Penzo, LSP, PG, CPG
Senior Hydrogeologist
Attachments

B. Suggested Form for Notice of Intent (NOI) for the Remediation General Permit

1. General site information. Please provide the following information about the site:

a) Name of **facility/site**: 120 Tremont Street		**Facility/site** address:	
Location of **facility/site**: longitude: 71 deg.4.1 min. W latitude: 42 deg.24.7 min.N	Facility SIC code(s): 4226	Street: 120 Tremont Street	
b) Name of **facility/site owner:** Frank & Jacquelyn DeMarco		Town: Everett	
Email address of owner: FLDMJR@comcast.net		State: MA	Zip: 02149 / Count
Telephone no.of facility/site **owner**: (617) 835-0715			
Fax no. of facility/site **owner**: (617) 389-5551		**Owner** is (check one): 1. Federal____ 2. State/Tribal_____ 3. Private_✓___ 4. other, if so, describe:	
Address of **owner** (if different from site):			
Street: 3 Seal Harbor, Apt. 836			
Town: Winthrop	State: MA	Zip: 02152	County: Suffolk
c) Legal name of **operator**: EnviroBusiness, Inc.	**Operator** telephone no: (781) 418-2321		
	Operator fax no.: (781) 418-2371		**Operator** email: mpenzo@e
Operator contact name and title: Michael A. Penzo, PG, CPG, LSP, Senior Hydrogeologist			
Address of **operator** (if different from owner):	Street: 21 B Street		
Town: Burlington	State: MA	Zip: 01803	County: Middlesex

d) Check "yes" or "no" for the following:
1. Has a prior NPDES permit exclusion been granted for the discharge? Yes___ No_✓_, if "yes," number:
2. Has a prior NPDES application (Form 1 & 2C) ever been filed for the discharge? Yes___ No_✓_, if "yes," date and tracking #:
3. Is the discharge a "new discharge"as defined by 40 CFR 122.2? Yes_✓_ No___
4. For sites in Massachusetts, is the discharge covered under the MA Contingency Plan (MCP) and exempt from state permitting? Yes_✓_ No__

e) Is site/facility subject to any State permitting or other action which is causing the generation of discharge? Yes ✓ No___ If "yes," please list: 1. site identification # assigned by the state of NH or MA: RTN 3-10153 2. permit or license # assigned: NA 3. state agency contact information: name, location, and telephone number: John Zupkus, MADEP, NERO (978) 694-3387	f) Is the site/facility covered by any other EPA permit, including: 1. multi-sector storm water general permit? Y___ N ✓, if Y, number: 2. phase I or II construction storm water general permit? Y___ N ✓, if Y, number: 3. individual NPDES permit? Y___ N ✓, if Y, number: 4. any other water quality related permit? Y___ N ✓, if Y, number:

2. Discharge information. Please provide information about the discharge, (attaching additional sheets as needed) including:

a) Describe the discharge activities for which the owner/applicant is seeking coverage:

Remediation of No. 2 Fuel Oil contaminated groundwater, recovery well pumping to bag filter, to two GAC units in series to discharge to onsite catchbasin to municipal storm sewer to eventual discharge to Malden River.

b) Provide the following information about each discharge:	1) Number of discharge points: 1	2) What is the **maximum** and **average flow rate** of discharge (in cubic feet per second, ft3/s)? Max. flow 0.0446 ft3/sec Average flow 0.0223 ft3/sec Is maximum flow a **design value**? Y___ N ✓ For average flow, include the units and appropriate notation if this value is a design value or estimate if not available.

3) Latitude and longitude of each discharge within 100 feet: pt.1:long. 71 deg 4.3 min lat. 42deg 24.7 min; pt.2: long._____ lat._____; pt.3: long._____ lat._____; pt.4:long._____ lat._____; pt.5: long._____ lat._____; pt.6:long._____ lat._____; pt.7: long._____ lat._____; pt.8:long._____ lat._____; etc.

4) If hydrostatic testing, total volume of the discharge (gals): N/A	5) Is the discharge intermittent_____or seasonal_____? Is discharge ongoing Yes ____ No ✓ ?__

c) Expected dates of discharge (mm/dd/yy): start 05/31/09 end 05/31/10

d) Please attach a line drawing or flow schematic showing water flow through the facility including:
1. sources of intake water, 2. contributing flow from the operation, 3. treatment units, and 4. discharge points and receiving waters(s).

3. Contaminant information. In order to complete this section, the applicant will need to take a minimum of one sample of the untreated water and have it analyzed for **all** of the parameters listed in Appendix III. Historical data, (i.e., data taken no more than 2 years prior to the effective date of the permit) may be used if obtained pursuant to: i. Massachusetts' regulations 310 CMR 40.0000, the Massachusetts Contingency Plan ("Chapter 21E"); ii. New Hampshire's Title 50 RSA 485-A: Water Pollution and Waste Disposal or Title 50 RSA 485-C: Groundwater Protection Act; or iii. an EPA permit exclusion letter issued pursuant to 40 CFR 122.3, provided the data was analyzed with test methods that meet the requirements of this permit. Otherwise, a new sample shall be taken and analyzed.

a) Based on the analysis of the sample(s) of the untreated influent, the applicant must check the box of the sub-categories that the potential discharge falls within.

Gasoline Only	VOC Only	Primarily Metals	Urban Fill Sites	Contaminated Sumps	Mixed Contaminants	Aquifer Testing ✓
Fuel Oils (and ✓ Other Oils) only	VOC with Other Contaminants	Petroleum with Other Contaminants	Listed Contaminated Sites ✓	Contaminated Dredge Condensates	Hydrostatic Testing of Pipelines/Tanks	Well Development or Rehabilitation

b) Based on the analysis of the untreated influent, the applicant must indicate whether each listed chemical is **believed present** or **believed absent** in the potential discharge. Attach additional sheets as needed.

PARAMETER	Believe Absent	Believe Present	# of Samples (1 minimum)	Type of Sample (e.g., grab)	Analytical Method Used (method #)	Minimum Level (ML) of Test Method	Maximum daily value		Avg. daily value	
							concentration (ug/l)	mass (kg)	concentration (ug/l)	mass (kg)
1. Total Suspended Solids		✓	1	grab	SM-2540D	2,000	89,000	9.716		
2. Total Residual Chlorine	✓		1	grab	SM-4500 CL G	100	0	0		
3. Total Petroleum Hydrocarbons		✓	1	grab	SW 846 8100 M	110	5,900	0.644		
4. Cyanide	✓		1	grab	SM-4500 CN	10	0	0		
5. Benzene		✓	1	grab	SW-846 8260B	1	45	0.0049		
6. Toluene		✓	1	grab	SW-846 8260B	1	0	0		
7. Ethylbenzene		✓	1	grab	SW-846 8260B	1	40	0.0044		
8. (m,p,o) Xylenes		✓	1	grab	SW-846 8260B	1	14	0.0015		
9. Total BTEX[4]		✓	1	grab	SW-846 8260B	1	99	0.0108		

[4] BTEX = Sum of Benzene, Toluene, Ethylbenzene, total Xylenes.

PARAMETER	Believe Absent	Believe Present	# of Samples (1 min-imum)	Type of Sample (e.g., grab)	Analytical Method Used (method #)	Minimum Level (ML) of Test Method	Maximum daily value		Avg. daily value	
							concentration (ug/l)	mass (kg)	concentration (ug/l)	mass (kg)
10. Ethylene Dibromide [5] (1,2- Dibromo-methane)	✓		1	grab	EPA 504.1	0.02	0	0		
11. Methyl-tert-Butyl Ether (MtBE)	✓		1	grab	SW-846 8260B	2	0	0		
12. tert-Butyl Alcohol (TBA)	✓		1	grab	SW-846 8260B	25	0	0		
13. tert-Amyl Methyl Ether (TAME)	✓		1	grab	EPA 524.2	0.5	0	0		
14. Naphthalene		✓	1	grab	SW-846 8260B	1	80	0.0087		
15. Carbon Tetra-chloride	✓		1	grab	SW-846 8260B	1	0	0		
16. 1,4 Dichlorobenzene	✓		1	grab	SW-846 8260B	1	0	0		
17. 1,2 Dichlorobenzene	✓		1	grab	SW-846 8260B	1	0	0		
18. 1,3 Dichlorobenzene	✓		1	grab	SW-846 8260B	1	0	0		
19. 1,1 Dichloroethane	✓		1	grab	SW-846 8260B	1	0	0		
20. 1,2 Dichloroethane	✓		1	grab	SW-846 8260B	1	0	0		
21. 1,1 Dichloroethylene	✓		1	grab	SW-846 8260B	1	0	0		
22. cis-1,2 Dichloro-ethylene	✓		1	grab	SW-846 8260B	1	0	0		
23. Dichloromethane (Methylene Chloride)	✓		1	grab	SW-846 8260B	2	0	0		
24. Tetrachloroethylene	✓		1	grab	SW-846 8260B	1	0	0		

[5] EDB is a groundwater contaminant at fuel spill and pesticide application sites in New England.

PARAMETER	Believe Absent	Believe Present	# of Samples (1 min-imum)	Type of Sample (e.g., grab)	Analytical Method Used (method #)	Minimum Level (ML) of Test Method	Maximum daily value		Avg. daily Value	
							concentration (ug/l)	mass (kg)	concentration (ug/l)	mass (kg)
25. 1,1,1 Trichloroethane	✓		1	grab	SW-846 8260B	1	0	0		
26. 1,1,2 Trichloroethane	✓		1	grab	SW-846 8260B	1	0	0		
27. Trichloroethylene	✓		1	grab	SW-846 8260B	1	0	0		
28. Vinyl Chloride	✓		1	grab	SW-846 8260B	1	0	0		
29. Acetone	✓		1	grab	SW-846 8260B	50	0	0		
30. 1,4 Dioxane	✓		1	grab	SW-846 8260B	3	0	0		
31. Total Phenols		✓	1	grab	EPA 420.1	10	100	0.0109		
32. Pentachlorophenol	✓		1	grab	SW-846 8270D	5	0	0		
33. Total Phthalates [6] (Phthalate esthers)	✓		1	grab	SW-846 8270D	5	0	0		
34. Bis (2-Ethylhexyl) Phthalate [Di-(ethylhexyl) Phthalate]	✓		1	grab	SW-846 8270D	5	0	0		
35. Total Group I Polycyclic Aromatic Hydrocarbons (PAH)	✓		1	grab	SW-846 8270D	5	0	0		
a. Benzo(a) Anthracene	✓		1	grab	SW-846 8270D	5	0	0		
b. Benzo(a) Pyrene	✓		1	grab	SW-846 8270D	5	0	0		
c. Benzo(b)Fluoranthene	✓		1	grab	SW-846 8270D	5	0	0		
d. Benzo(k) Fluoranthene	✓		1	grab	SW-846 8270D	5	0	0		
e. Chrysene	✓		1	grab	SW-846 8270D	5	0	0		

[6] The sum of individual phthalate compounds.

PARAMETER	Believe Absent	Believe Present	# of Samples (1 minimum)	Type of Sample (e.g., grab)	Analytical Method Used (method #)	Minimum Level (ML) of Test Method	Maximum daily value		Average daily value	
							concentration (ug/l)	mass (kg)	concentration (ug/l)	mass (kg)
f. Dibenzo(a,h) anthracene	✓		1	grab	SW-846 8270D	5	0	0		
g. Indeno(1,2,3-cd) Pyrene	✓		1	grab	SW-846 8270D	5	0	0		
36. Total Group II Polycyclic Aromatic Hydrocarbons (PAH)	✓		1	grab	SW-846 8270D	5	6	0.00065		
h. Acenaphthene	✓		1	grab	SW-846 8270D	1	0	0		
i. Acenaphthylene	✓		1	grab	SW-846 8270D	5	0	0		
j. Anthracene	✓		1	grab	SW-846 8270D	5	0	0		
k. Benzo(ghi) Perylene	✓		1	grab	SW-846 8270D	5	0	0		
l. Fluoranthene	✓		1	grab	SW-846 8270D	1	0	0		
m. Fluorene	✓		1	grab	SW-846 8270D	5	0	0		
n. Naphthalene-	✓		1	grab	SW-846 8270D	5	0	0		
o. Phenanthrene	✓		1	grab	SW-846 8270D	5	6	0.00065		
p. Pyrene	✓		1	grab	SW-846 8270D	5	0	0		
37. Total Polychlorinated Biphenyls (PCBs)	✓		1	grab	SW-846 8082	0.5	0	0		
38. Antimony		✓	1	grab	EPA 200.8	2	6	0.00065		
39. Arsenic		✓	1	grab	EPA 200.8	1	4.3	0.00046		
40. Cadmium	✓		1	grab	EPA 200.7	4	0	0		
41. Chromium III		✓	1	grab	EPA 200.7	5	26	0.0028		
42. Chromium VI		✓	1	grab	SM3500-CR D	10	18	0.0020		

PARAMETER	Believe Absent	Believe Present	# of Samples (1 min-imum)	Type of Sample (e.g., grab)	Analytical Method Used (method #)	Minimum Level (ML) of Test Method	Maximum daily value		Avg. daily value	
							concentration (ug/l)	mass (kg)	concentration (ug/l)	mass (kg)
43. Copper		✓	1	grab	EPA 200.7	10	39	0.00425		
44. Lead	✓		1	grab	EPA 200.7	15	0	0		
45. Mercury	✓		1	grab	EPA 200.7	0.5	0	0		
46. Nickel		✓	1	grab	EPA 200.7	10	35	0.0038		
47. Selenium	✓		1	grab	EPA 200.7	50	0	0		
48. Silver	✓		1	grab	EPA 200.7	10	0	0		
49. Zinc		✓	1	grab	EPA 200.7	20	85	0.0093		
50. Iron		✓	1	grab	EPA 200.7	100	27,300	2.98		
Other (describe):										

c) For discharges where **metals** are believed present, please fill out the following:

Step 1: Do any of the metals in the influent have a **reasonable potential** to exceed the effluent limits in Appendix III (i.e., the limits set at zero to five dilutions)? Y_✓_ N____	If yes, which metals? Sb, Ar, Cr+3, Cr+6,Cu, Ni, Zn, Fe
Step 2: For any metals which have **reasonable potential** to exceed the **Appendix III** limits, calculate the **dilution factor (DF)** using the formula in Part I.A.3.c) (step 2) of the NOI instructions or as determined by the State prior to the submission of this NOI. What is the dilution factor for applicable metals? Metals: Sb, Ar, Cr+3, Cr+6,Cu, Ni, Zn, Fe DF: 20.23	Look up the limit calculated at the corresponding dilution factor in **Appendix IV.** Do any of the metals in the **influent** have the potential to exceed the corresponding **effluent** limits in Appendix IV (i.e., is the influent concentration above the limit set at the calculated dilution factor)? Y_✓_ N____ If "Yes," list which metals: Fe

4. Treatment system information. Please describe the treatment system using separate sheets as necessary, including:

a) A description of the treatment system, including a schematic of the proposed or existing treatment system:						
b) Identify each applicable treatment unit (check all that apply):	Frac. tank	Air stripper	Oil/water separator	Equalization tanks	Bag filter ✓	GAC filter ✓
	Chlorination	Dechlorination	Other (please describe):			
c) Proposed **average** and **maximum flow rates** (gallons per minute) for the discharge and the **design flow rate**(s) (gallons per minute) of the treatment system: Average flow rate of discharge 10 gpm Maximum flow rate of treatment system 20 gpm Design flow rate of treatment system 20 gpm						
d) A description of chemical additives being used or planned to be used (attach MSDS sheets):						

5. Receiving surface water(s). Please provide information about the receiving water(s), using separate sheets as necessary:

a) Identify the discharge pathway:	Direct____	Within facility ✓	Storm drain ✓	River/brook ✓	Wetlands____	Other (describe):
b) Provide a narrative description of the discharge pathway, including the name(s) of the receiving waters: Pumped water from recovery well piped to bag filter, 2 GAC filters in series, discharge to an onsite catchbasin, to municipal storm sewer to Malden River						
c) Attach a detailed map(s) indicating the site location and location of the outfall to the receiving water: 1. For multiple discharges, number the discharges sequentially. 2. For indirect dischargers, indicate the location of the discharge to the indirect conveyance and the discharge to surface water The map should also include the location and distance to the nearest sanitary sewer as well as the locus of nearby sensitive receptors (based on USGS topographical mapping), such as surface waters, drinking water supplies, and wetland areas.						
d) Provide the state water quality classification of the receiving water B Warm Water,						
e) Provide the reported or calculated seven day-ten year low flow (7Q10) of the receiving water 0.858 cfs Please attach any calculation sheets used to support stream flow and dilution calculations.						
f) Is the receiving water a listed 303(d) water quality impaired or limited water? Yes ✓ No____ If yes, for which pollutant(s)? Pesticides, Priority Organics, Is there a TMDL? Yes ✓ No____ If yes, for which pollutant(s)? organic enrichment, low DO, Pathogens, oil & grease						

6. Results of Consultation with Federal Services: Please provide the following information according to requirements of Part I.B.4 and Appendices II and VII.

a) Are any listed threatened or endangered species, or designated critical habitat, in proximity to the discharge? Yes____ No_✓_
Has any consultation with the federal services been completed ? Yes_✓_ No___ or is consultation underway? Yes ____ No____
What were the results of the consultation with the U.S. Fish and Wildlife Service and/or National Marine Fisheries Service (check one):
a "no jeopardy" opinion? _____or written concurrence_✓_ on a finding that the discharges are not likely to adversely affect any endangered species or critical habitat?

b) Are any historic properties listed or eligible for listing on the National Register of Historic Places located on the facility or site or in proximity to the discharge?
Yes_____ No_✓_ Have any state or tribal historic preservation officer been consulted in this determination (Massachusetts only)? Yes_✓_ No_____

7. Supplemental information. :

Please provide any supplemental information. Attach any analytical data used to support the application. Attach any certification(s) required by the general permit.

8. Signature Requirements: The Notice of Intent must be signed by the operator in accordance with the signatory requirements of 40 CFR Section 122.22, including the following certification:

I certify under penalty of law that this document and all attachments were prepared under my direction or supervision in accordance with a system designed to assure that qualified personnel properly gather and evaluate the information submitted. Based on my inquiry of the person or persons who manage the system, or those persons directly responsible for gathering the information, I certify that the information submitted is, to the best of my knowledge and belief, true, accurate, and complete. I certify that I am aware that there are significant penalties for submitting false information, including the possibility of fine and imprisonment for knowing violations.

Facility/Site Name: 120 Tremont Street, Everett, MA 02149

Operator signature: Michael A. Penzo

Title: LSP, Senior Hydrogeologist

Date: 05/07/09

ATTACHMENTS FOR

NPDES NOI

120 TREMONT STREET, EVERETT, MA

RTN 3-10153

1. Line Drawing of System (Figure 5 Remedial Design Schematic)
2. NPDES NOI Dilution Calculation
3. USGS Topographic Map showing limits of Drainage Basin
4. Detailed Map of Receiving Water
5. Site Plan showing locations of storm sewer and sanitary sewer in proximity to the Site
6. USGS Topographic Map
7. Massachusetts GIS Map
8. NPDES NOI Mass Calculation
9. Analytical data sheets
10. Letter from Division of Fisheries and Wildlife
11. Letter from Massachusetts Historical Commission

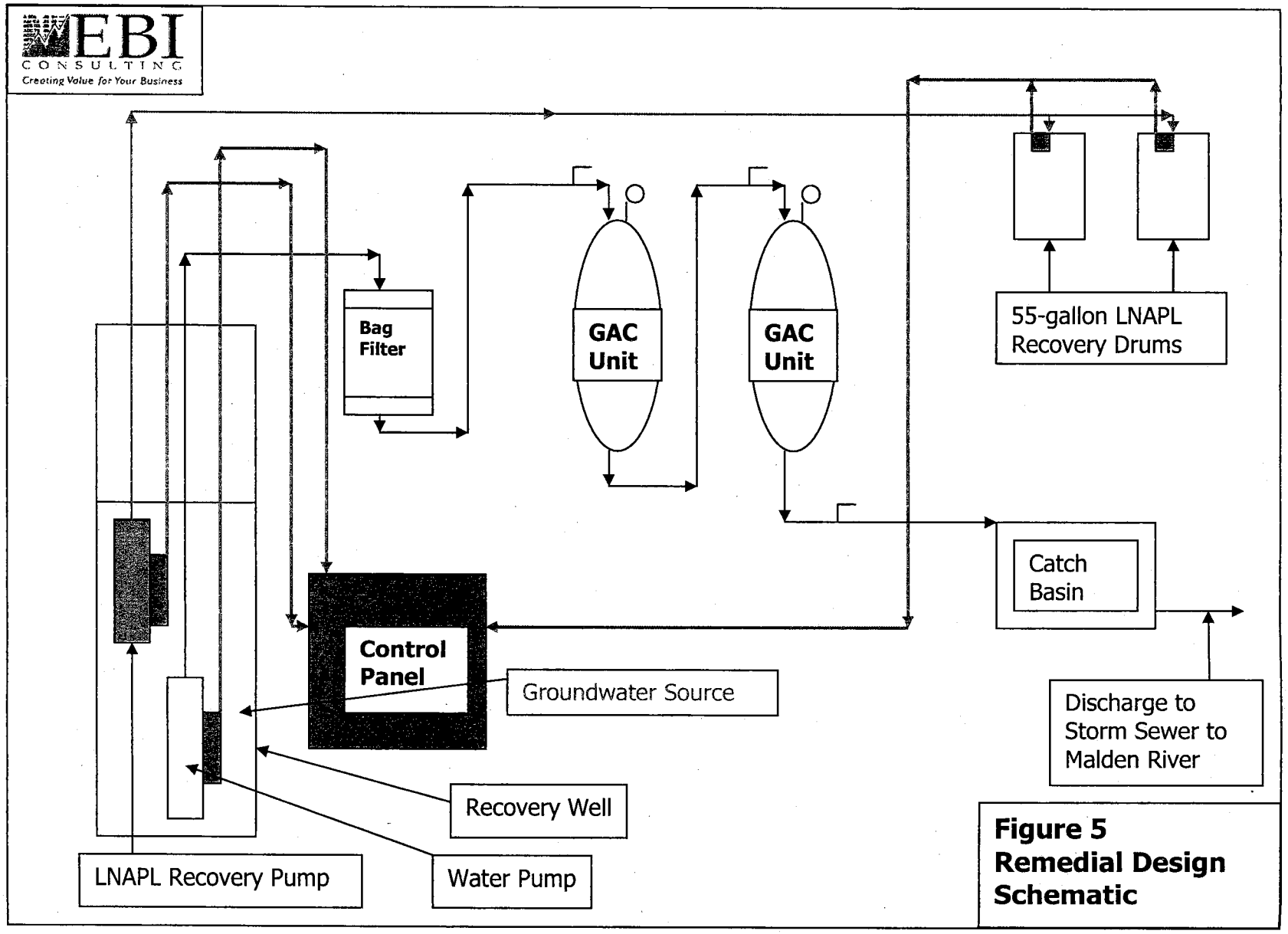

Figure 5
Remedial Design Schematic

NPDES NOI DILUTION CALCULATION

120 TREMONT STREET, EVERETT, MA

RTN3-10153

Malden River, Massachusetts

Dilution Calculation

DF = (Qd + Qs)Qd

Where: **DF** **= Dilution Factor**

Qd **= Maximum flow rate of the discharge in cubic feet per second (cfs)**

(1.0 gpm = 0.00223 cfs), 20 gpm = 0.0446 cfs

Qs **=Receiving water 7Q10 flow (cfs) where,**

7Q10 **= The minimum flow (cfs) for 7 consecutive days with a recurrence interval of 10 years**

The total drainage area of the Malden River is 11 square miles. From the proposed discharge point 1.2 miles upstream of the Amelia Earhart dam it is calculated that 8.58 square miles of drainage basin exists upstream of the proposed discharge.

According to Mr. Paul Hogan, NPDES section, CERO, MADEP, in cases where 7Q10 cannot be easily obtained, it can be estimated with some certainty by using the factor: 0.1 cfs/sq. mile of drainage area.

In this case 0.858 cfs will be used for the 7Q10.

Therefore,

DF = (0.0446 cfs + 0.858 cfs)/ 0.0446 cfs

DF= 20.23

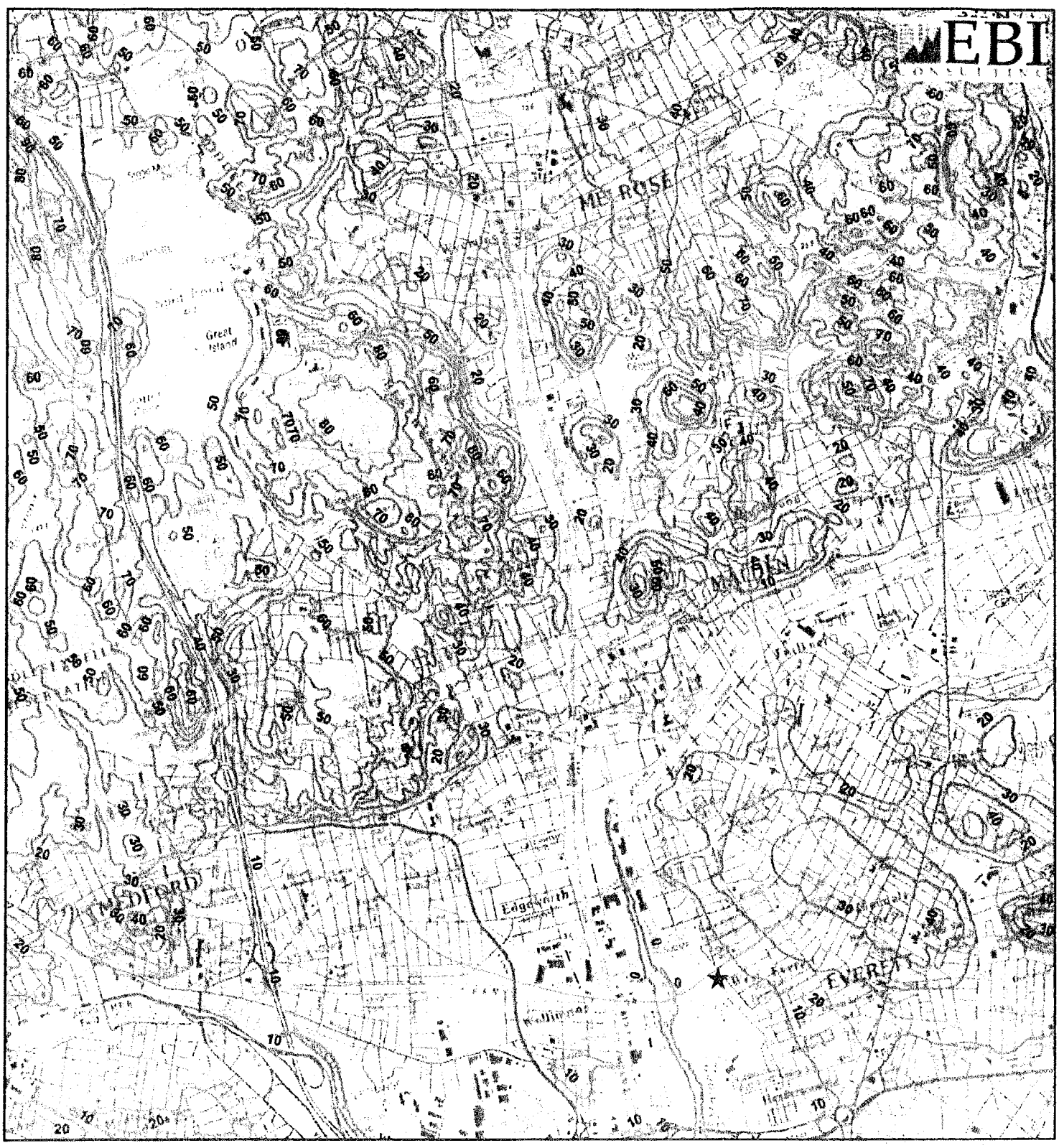

Legend

★ Project Site

10 Meter Contour

USGS 24k Quad: Boston North, MA 1980

Source: Selected data from USGS and EBI.

USGS Quad Location Map
120 Tremont Street
Everett, MA 02149

Drainage Area
8.58 square miles

0 2,000 4,000 Feet

INV 12080145

120 TREMONT STREET, EVERETT, MA
DETAILED MAP OF RECEIVING WATER

SITE PLAN

120 Tremont Street, Everett, MA

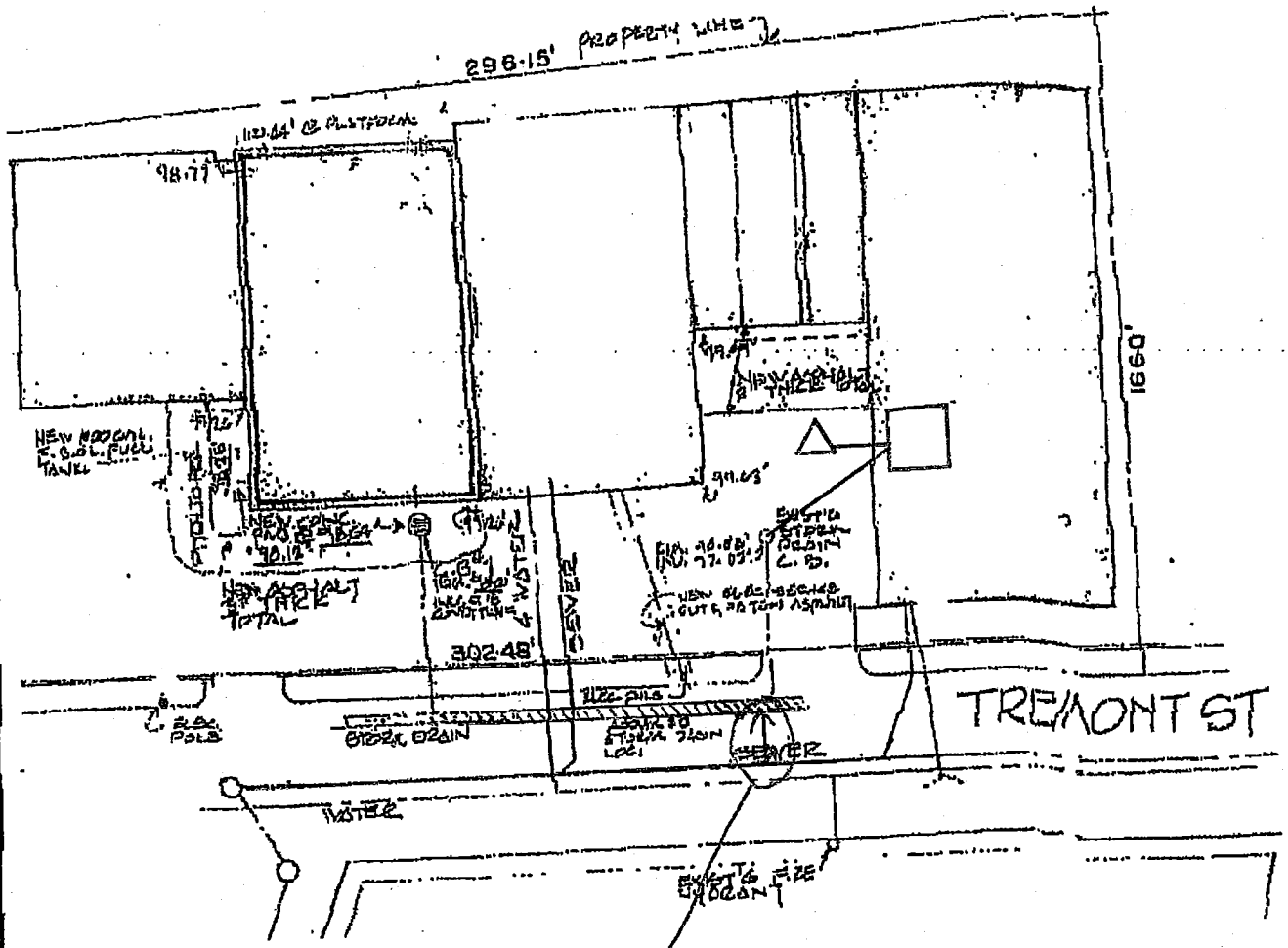

LEGEND

△ EXTRACTION (RECOVERY) WELL

□ Groundwater Treatment system

Note:
STORM SEWER IS Approximately 15'
from Sanitary sewer in Tremont Street

0 25' 50'

The information that is provided above is from sources that are deemed to be reliable and is subject to error, omission, change in price or withdrawal from the market without any prior notice.

Legend

Project Site

Project Radius at 1/2, and 1 Mile

USGS 24k Quad: Boston North, MA 1980

Source: Selected data from USGS and EBI.

USGS Quad Location Map

120 Tremont Street
Everett, MA 02149

1 inch equals 2,000 feet

0 300 600 1,200 Meters

0 1,000 2,000 4,000 Feet

PN 12080145

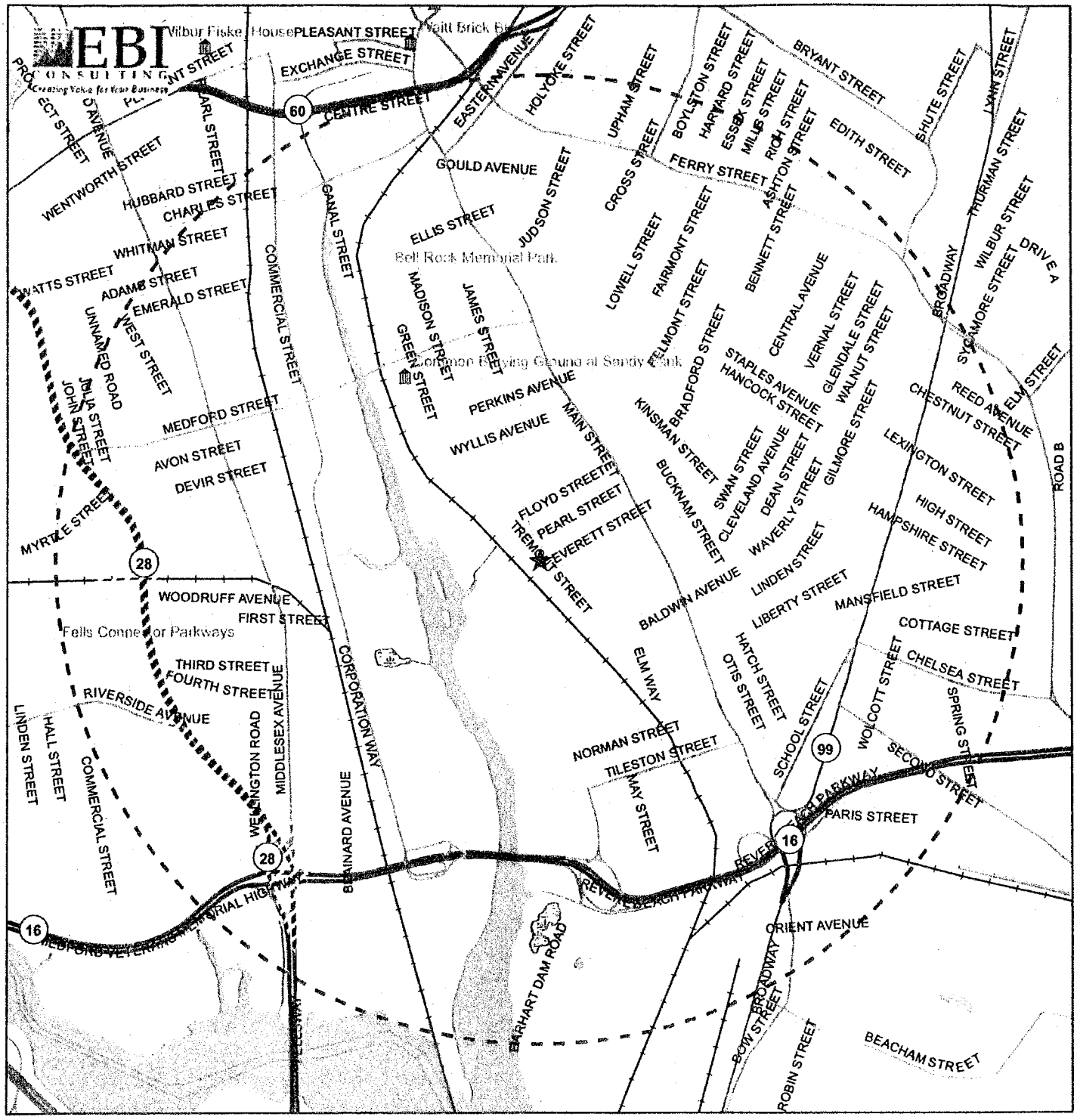

Project Site

Site Radius at 1 Mile

National Register Site

National Register District

MA - NHESP 2008 Estimated Habitats for Rare Wildlife

MA - Area of Environmental Concern

MA - NHESP 2008 Priority Habitat for State Protected Rare Species

MA - NHESP 2009 Certified Vernal Pool

Historic Resources / Priority Habitat Map

Source: Selected data from FEMA, NWI, ESRI and EBI MA GIS & National Register

120 TREMONT STREET
EVERETT, MA 02149

0 0.25 0.5 Miles

FN 12080145

NPDES NOI MASS CALCULATION

120 TREMONT STREET, EVERETT, MA

RTN3-10153

Mass Calculation

Mass per Day (lb/day) = Q(MGD) x C(mg/l) x 8.34

Where: Q(MGD) = Discharge in Million Gallons per Day

C(mg/l) = Concentration of Parameter in milligrams per liter

lb/day = pounds per day

1 Kilogram = 2.2 pounds

Maximum Flow Rate = 20 gallons per minute

MGD = 0.00144 x gallons per minute

Maximum Flow Rate = 0.0288 MGD

Example:

Total Suspended Solids = 89 mg/l

Mass per Day (lb/day) = 0.0228 MGD x 89mg/l x 8.34 = 21.38 lb/day

21.38 lb/day x 1 kg/2.2 lb = 9.717 kg/day

R.I. ANALYTICAL
Specialists in Environmental Services

CERTIFICATE OF ANALYSIS

EBI Consultants
Attn: Mr. Mike Penzo
21 B Street
Burlington, MA 01803

Date Received: 2/27/09
Date Reported: 3/10/09
Date Revised: 4/8/09
P.O. #:
Work Order # 0902-03354

DESCRIPTION: PROJECT# 12090028 EVERETT

Subject sample(s) has/have been analyzed by our Warwick, R.I. laboratory with the attached results.

Reference: All parameters were analyzed by U.S. EPA approved methodologies.
The specific methodologies are listed in the methods column of the Certificate Of Analysis.

Data qualifiers (if present) are explained in full at the end of a given sample's analytical results.

Certification #: RI-033, MA-RI015, CT-PH-0508, ME-RI015
NH-253700 A & B, USDA S-41844

If you have any questions regarding this work, or if we may be of further assistance, please contact our customer service department.

Approved by:

Data Reporting

enc: Chain of Custody

R.I. Analytical Laboratories, Inc.

CERTIFICATE OF ANALYSIS

EBI Consultants
Date Received: 2/27/09
Work Order #: 0902-03354

Approved by: _____
Data Reporting

Sample # 001
SAMPLE DESCRIPTION: RW-1
SAMPLE TYPE: GRAB
SAMPLE DATE/TIME: 2/26/2009 @ 11:00

PARAMETER	SAMPLE RESULTS	DET. LIMIT	UNITS	METHOD	DATE ANALYZED	ANALYST
Total Suspended Solids	89	2.0	mg/l	SM-2540D	3/4/09	ALC
Hexavalent Chromium	<0.02	0.02	mg/l	SM3500-CR D	2/27/09	CAA
Total Residual Chlorine	<0.1	0.1	mg/l	SM 4500CL G	2/27/09	ML
Total Cyanide	0.01	0.01	mg/l	SM-4500CN-C E	3/3/09	ML
Total Phenol	0.10	0.01	mg/l	EPA 420.1	3/3/09	EC
TPH						
TPH GC/FID	5900	110	ug/l	SW846 8100M	3/5/09	CDC
Extraction date	Extracted			SW846 3510	3/4/09	EOO
PCB						
Aroclor-1016	<0.5	0.5	ug/l	SW-846 8082	3/4/09	MFT
Aroclor-1221	<0.5	0.5	ug/l	SW-846 8082	3/4/09	MFT
Aroclor-1232	<0.5	0.5	ug/l	SW-846 8082	3/4/09	MFT
Aroclor-1242	<0.5	0.5	ug/l	SW-846 8082	3/4/09	MFT
Aroclor-1248	<0.5	0.5	ug/l	SW-846 8082	3/4/09	MFT
Aroclor-1254	<0.5	0.5	ug/l	SW-846 8082	3/4/09	MFT
Aroclor-1260	<0.5	0.5	ug/l	SW-846 8082	3/4/09	MFT
Surrogate			RANGE	SW-846 8082	3/4/09	MFT
Tetrachloro-m-xylene (TCMX)	110		30-150%	SW-846 8082	3/4/09	MFT
Decachlorobiphenyl	33		30-150%	SW-846 8082	3/4/09	MFT
Extraction date	Extracted			SW846 3510	3/3/09	EOO
Volatile Organic Compounds						
Benzene	45	1	ug/l	SW-846 8260B	3/3/09	MMM
Bromobenzene	<1	1	ug/l	SW-846 8260B	3/3/09	MMM
Bromochloromethane	<1	1	ug/l	SW-846 8260B	3/3/09	MMM
Bromodichloromethane	<1	1	ug/l	SW-846 8260B	3/3/09	MMM
Bromoform	<1	1	ug/l	SW-846 8260B	3/3/09	MMM
Bromomethane	<7	7	ug/l	SW-846 8260B	3/3/09	MMM
n-Butylbenzene	12	1	ug/l	SW-846 8260B	3/3/09	MMM
Sec-butylbenzene	6	1	ug/l	SW-846 8260B	3/3/09	MMM
tert-Butylbenzene	22	1	ug/l	SW-846 8260B	3/3/09	MMM
Carbon Tetrachloride	<1	1	ug/l	SW-846 8260B	3/3/09	MMM
Chlorobenzene	<1	1	ug/l	SW-846 8260B	3/3/09	MMM
Chloroethane	<5	5	ug/l	SW-846 8260B	3/3/09	MMM
Chloroform	<1	1	ug/l	SW-846 8260B	3/3/09	MMM
Chloromethane	<5	5	ug/l	SW-846 8260B	3/3/09	MMM
2-Chlorotoluene	<1	1	ug/l	SW-846 8260B	3/3/09	MMM
4-Chlorotoluene	<1	1	ug/l	SW-846 8260B	3/3/09	MMM
Dibromochloromethane	<1	1	ug/l	SW-846 8260B	3/3/09	MMM
1,2-Dibromo-3-Chloropropane	<2	2	ug/l	SW-846 8260B	3/3/09	MMM

R.I. Analytical Laboratories, Inc.

CERTIFICATE OF ANALYSIS

EBI Consultants
Date Received: 2/27/09
Work Order #: 0902-03354

Approved by: _____
Data Reporting

Sample # 001
SAMPLE DESCRIPTION: RW-1
SAMPLE TYPE: GRAB
SAMPLE DATE/TIME: 2/26/2009 @ 11:00

PARAMETER	SAMPLE RESULTS	DET. LIMIT	UNITS	METHOD	DATE ANALYZED	ANALYST
1,2-Dibromoethane(EDB)	<1	1	ug/l	SW-846 8260B	3/3/09	MMM
Dibromomethane	<2	2	ug/l	SW-846 8260B	3/3/09	MMM
1,2-Dichlorobenzene	<1	1	ug/l	SW-846 8260B	3/3/09	MMM
1,3-Dichlorobenzene	<1	1	ug/l	SW-846 8260B	3/3/09	MMM
1,4-Dichlorobenzene	<1	1	ug/l	SW-846 8260B	3/3/09	MMM
Dichlorodifluoromethane	<5	5	ug/l	SW-846 8260B	3/3/09	MMM
1,1-Dichloroethane	<1	1	ug/l	SW-846 8260B	3/3/09	MMM
1,2-Dichloroethane	<1	1	ug/l	SW-846 8260B	3/3/09	MMM
1,1-Dichloroethene	<1	1	ug/l	SW-846 8260B	3/3/09	MMM
cis-1,2-Dichloroethene	<1	1	ug/l	SW-846 8260B	3/3/09	MMM
trans-1,2-Dichloroethylene	<1	1	ug/l	SW-846 8260B	3/3/09	MMM
1,2-Dichloropropane	<1	1	ug/l	SW-846 8260B	3/3/09	MMM
1,3-Dichloropropane	<1	1	ug/l	SW-846 8260B	3/3/09	MMM
2,2-Dichloropropane	<1	1	ug/l	SW-846 8260B	3/3/09	MMM
1,1-Dichloropropene	<1	1	ug/l	SW-846 8260B	3/3/09	MMM
Ethylbenzene	40	1	ug/l	SW-846 8260B	3/3/09	MMM
Hexachlorobutadiene	<1	1	ug/l	SW-846 8260B	3/3/09	MMM
Isopropylbenzene	11	1	ug/l	SW-846 8260B	3/3/09	MMM
p-Isopropyltoluene	6	1	ug/l	SW-846 8260B	3/3/09	MMM
Methylene Chloride	<2	2	ug/l	SW-846 8260B	3/3/09	MMM
Naphthalene	80	1	ug/l	SW-846 8260B	3/3/09	MMM
n-Propylbenzene	15	1	ug/l	SW-846 8260B	3/3/09	MMM
Styrene	<1	1	ug/l	SW-846 8260B	3/3/09	MMM
1,1,1,2-Tetrachloroethane	<1	1	ug/l	SW-846 8260B	3/3/09	MMM
1,1,2,2-Tetrachloroethane	<1	1	ug/l	SW-846 8260B	3/3/09	MMM
Tetrachloroethene	<1	1	ug/l	SW-846 8260B	3/3/09	MMM
Toluene	<1	1	ug/l	SW-846 8260B	3/3/09	MMM
1,2,3-Trichlorobenzene	<1	1	ug/l	SW-846 8260B	3/3/09	MMM
1,2,4-Trichlorobenzene	<1	1	ug/l	SW-846 8260B	3/3/09	MMM
1,1,1-Trichloroethane	<1	1	ug/l	SW-846 8260B	3/3/09	MMM
1,1,2-Trichloroethane	<1	1	ug/l	SW-846 8260B	3/3/09	MMM
Trichloroethene	<1	1	ug/l	SW-846 8260B	3/3/09	MMM
Trichlorofluoromethane	<1	1	ug/l	SW-846 8260B	3/3/09	MMM
1,2,3-Trichloropropane	<1	1	ug/l	SW-846 8260B	3/3/09	MMM
1,2,4-Trimethylbenzene	140	1	ug/l	SW-846 8260B	3/3/09	MMM
1,3,5-Trimethylbenzene	20	1	ug/l	SW-846 8260B	3/3/09	MMM
Vinyl Chloride	<1	1	ug/l	SW-846 8260B	3/3/09	MMM
o-Xylene	3	1	ug/l	SW-846 8260B	3/3/09	MMM
m,p-Xylene	11	1	ug/l	SW-846 8260B	3/3/09	MMM
Total Xylene	14	1	ug/l	SW-846 8260B	3/3/09	MMM
Methyl Tertiary Butyl Ether (MTBE)	<2	2	ug/l	SW-846 8260B	3/3/09	MMM
Surrogates			RANGE	SW-846 8260B	3/3/09	MMM

R.I. Analytical Laboratories, Inc.

CERTIFICATE OF ANALYSIS

EBI Consultants
Date Received: 2/27/09
Work Order #: 0902-03354

Approved by: _____
Data Reporting

Sample # 001
SAMPLE DESCRIPTION: RW-1
SAMPLE TYPE: GRAB

SAMPLE DATE/TIME: 2/26/2009 @ 11:00

PARAMETER	SAMPLE RESULTS	DET. LIMIT	UNITS	METHOD	DATE ANALYZED	ANALYST
Dibromofluoromethane	105		86-118%	SW-846 8260B	3/3/09	MMM
Toluene-d8	107		88-110%	SW-846 8260B	3/3/09	MMM
4-Bromofluorobenzene	107		86-115%	SW-846 8260B	3/3/09	MMM
1,2 Dichloroethane-d4	104		80-120%	SW-846 8260B	3/3/09	MMM
Semi-Volatile Organic Compounds						
Acenaphthene	<1	1	ug/l	SW-846 8270D	3/27/09	RGM
Acenaphthylene	<5	5	ug/l	SW-846 8270D	3/3/09	RGM
Anthracene	<5	5	ug/l	SW-846 8270D	3/3/09	RGM
Benzidine	<5	5	ug/l	SW-846 8270D	3/3/09	RGM
Benzo(a)anthracene	<5	5	ug/l	SW-846 8270D	3/3/09	RGM
Benzo(b)fluoranthene	<5	5	ug/l	SW-846 8270D	3/3/09	RGM
Benzo(k)fluoranthene	<5	5	ug/l	SW-846 8270D	3/3/09	RGM
Benzo(g,h,i)perylene	<5	5	ug/l	SW-846 8270D	3/3/09	RGM
Benzo(a)pyrene	<5	5	ug/l	SW-846 8270D	3/3/09	RGM
Bis(2-chloroethyl)ether	<5	5	ug/l	SW-846 8270D	3/3/09	RGM
Bis(2-Chloroethoxy)methane	<5	5	ug/l	SW-846 8270D	3/3/09	RGM
Bis(2-Chloroisopropyl)Ether	<5	5	ug/l	SW-846 8270D	3/3/09	RGM
Bis(2-ethylhexyl)phthalate	<5	5	ug/l	SW-846 8270D	3/3/09	RGM
4-Bromophenyl phenyl ether	<5	5	ug/l	SW-846 8270D	3/3/09	RGM
Butylbenzyl phthalate	<5	5	ug/l	SW-846 8270D	3/3/09	RGM
2-Chloronaphthalene	<5	5	ug/l	SW-846 8270D	3/3/09	RGM
4-Chlorophenyl phenyl ether	<5	5	ug/l	SW-846 8270D	3/3/09	RGM
Chrysene	<5	5	ug/l	SW-846 8270D	3/3/09	RGM
Dibenzo(a,h)anthracene	<5	5	ug/l	SW-846 8270D	3/3/09	RGM
Di-n-butyl phthalate	<5	5	ug/l	SW-846 8270D	3/3/09	RGM
1,2-Dichlorobenzene	<5	5	ug/l	SW-846 8270D	3/3/09	RGM
1,3-Dichlorobenzene	<5	5	ug/l	SW-846 8270D	3/3/09	RGM
1,4-Dichlorobenzene	<5	5	ug/l	SW-846 8270D	3/3/09	RGM
3,3'-Dichlorobenzidine	<5	5	ug/l	SW-846 8270D	3/3/09	RGM
Diethyl phthalate	<5	5	ug/l	SW-846 8270D	3/3/09	RGM
Dimethyl phthalate	<5	5	ug/l	SW-846 8270D	3/3/09	RGM
2,4-Dinitrotoluene	<5	5	ug/l	SW-846 8270D	3/3/09	RGM
2,6-Dinitrotoluene	<5	5	ug/l	SW-846 8270D	3/3/09	RGM
Di-n-octyl phthalate	<5	5	ug/l	SW-846 8270D	3/3/09	RGM
1,2-Diphenylhydrazine	<5	5	ug/l	SW-846 8270D	3/3/09	RGM
Fluoranthene	<1	1	ug/l	SW-846 8270D	3/27/09	RGM
Fluorene	<5	5	ug/l	SW-846 8270D	3/3/09	RGM
Hexachlorobenzene	<5	5	ug/l	SW-846 8270D	3/3/09	RGM
Hexachlorobutadiene	<5	5	ug/l	SW-846 8270D	3/3/09	RGM
Hexachlorocyclopentadiene	<5	5	ug/l	SW-846 8270D	3/3/09	RGM
Hexachloroethane	<5	5	ug/l	SW-846 8270D	3/3/09	RGM

R.I. Analytical Laboratories, Inc.

CERTIFICATE OF ANALYSIS

EBI Consultants
Date Received: 2/27/09
Work Order #: 0902-03354

Approved by: _____
Data Reporting

Sample # 001
SAMPLE DESCRIPTION: RW-1
SAMPLE TYPE: GRAB
SAMPLE DATE/TIME: 2/26/2009 @ 11:00

PARAMETER	SAMPLE RESULTS	DET. LIMIT	UNITS	METHOD	DATE ANALYZED	ANALYST
Indeno(1,2,3-cd)pyrene	<5	5	ug/l	SW-846 8270D	3/3/09	RGM
Isophorone	<5	5	ug/l	SW-846 8270D	3/3/09	RGM
Naphthalene	<5	5	ug/l	SW-846 8270D	3/3/09	RGM
Nitrobenzene	<5	5	ug/l	SW-846 8270D	3/3/09	RGM
N-nitrosodimethylamine	<5	5	ug/l	SW-846 8270D	3/3/09	RGM
N-nitrosodiphenylamine	<5	5	ug/l	SW-846 8270D	3/3/09	RGM
N-nitrosodi-n-propylamine	<5	5	ug/l	SW-846 8270D	3/3/09	RGM
Phenanthrene	6	5	ug/l	SW-846 8270D	3/3/09	RGM
Pyrene	<5	5	ug/l	SW-846 8270D	3/3/09	RGM
1,2,4-Trichlorobenzene	<5	5	ug/l	SW-846 8270D	3/3/09	RGM
4-Chloro-3-methylphenol	<5	5	ug/l	SW-846 8270D	3/3/09	RGM
2-Chlorophenol	<5	5	ug/l	SW-846 8270D	3/3/09	RGM
2,4-Dichlorophenol	<5	5	ug/l	SW-846 8270D	3/3/09	RGM
2,4-Dimethylphenol	<5	5	ug/l	SW-846 8270D	3/3/09	RGM
2-Methyl-4,6-dinitrophenol	<5	5	ug/l	SW-846 8270D	3/3/09	RGM
2,4-Dinitrophenol	<5	5	ug/l	SW-846 8270D	3/3/09	RGM
2-Nitrophenol	<5	5	ug/l	SW-846 8270D	3/3/09	RGM
4-Nitrophenol	<5	5	ug/l	SW-846 8270D	3/3/09	RGM
Pentachlorophenol	<5	5	ug/l	SW-846 8270D	3/3/09	RGM
Phenol	<5	5	ug/l	SW-846 8270D	3/3/09	RGM
2,4,5-Trichlorophenol	<5	5	ug/l	SW-846 8270D	3/3/09	RGM
2,4,6-Trichlorophenol	<5	5	ug/l	SW-846 8270D	3/3/09	RGM
2-Methylnaphthalene	10	5	ug/l	SW-846 8270D	3/3/09	RGM
2-Methylphenol	<5	5	ug/l	SW-846 8270D	3/3/09	RGM
3 & 4-Methylphenols	<5	5	ug/l	SW-846 8270D	3/3/09	RGM
Acetophenone	<5	5	ug/l	SW-846 8270D	3/3/09	RGM
Aniline	<5	5	ug/l	SW-846 8270D	3/3/09	RGM
Azobenzene	<5	5	ug/l	SW-846 8270D	3/3/09	RGM
4-Chloroaniline	<5	5	ug/l	SW-846 8270D	3/3/09	RGM
Dibenzofuran	<5	5	ug/l	SW-846 8270D	3/3/09	RGM
Surrogates			RANGE	SW-846 8270D	3/3/09	RGM
Phenol-d5	17		15-110%	SW-846 8270D	3/3/09	RGM
2-Fluorophenol	16		15-110%	SW-846 8270D	3/3/09	RGM
2,4,6-Tribromophenol	110		15-110%	SW-846 8270D	3/3/09	RGM
Nitrobenzene-d5	54		30-130%	SW-846 8270D	3/3/09	RGM
2-Fluorobiphenyl	61		30-130%	SW-846 8270D	3/3/09	RGM
P-Terphenyl-d14	42		30-130%	SW-846 8270D	3/3/09	RGM
Total Metals						
Antimony	<0.100	0.100	mg/l	EPA 200.7	3/10/09	VMY
Arsenic	<0.020	0.020	mg/l	EPA 200.7	3/10/09	VMY
Cadmium	<0.004	0.004	mg/l	EPA 200.7	3/10/09	VMY

R.I. Analytical Laboratories, Inc.

CERTIFICATE OF ANALYSIS

EBI Consultants
Date Received: 2/27/09
Work Order #: 0902-03354

Approved by: _____
Data Reporting

Sample # 001
SAMPLE DESCRIPTION: RW-1
SAMPLE TYPE: GRAB
SAMPLE DATE/TIME: 2/26/2009 @ 11:00

PARAMETER	SAMPLE RESULTS	DET. LIMIT	UNITS	METHOD	DATE ANALYZED	ANALYST
Chromium	0.026	0.005	mg/l	EPA 200.7	3/10/09	VMY
Copper	0.039	0.010	mg/l	EPA 200.7	3/10/09	VMY
Iron	27.3	0.100	mg/l	EPA 200.7	3/10/09	VMY
Lead	<0.015	0.015	mg/l	EPA 200.7	3/10/09	VMY
Mercury	<0.0005	0.0005	mg/l	EPA 245.1	3/4/09	MAZ
Nickel	0.035	0.010	mg/l	EPA 200.7	3/10/09	VMY
Selenium	<0.050	0.050	mg/l	EPA 200.7	3/10/09	VMY
Silver	<0.020	0.020	mg/l	EPA 200.7	3/10/09	VMY
Zinc	0.085	0.020	mg/l	EPA 200.7	3/10/09	VMY

Per request of the client a separate analysis was performed on this sample on 12 Mar 09 to include the following compounds with the following results:

tert-Butyl alcohol <25 ppb
tert-Amyl methyl ether <5ppb
Acetone <50

SURROGATES:
Dibromofluoromethane = 94%
Toluene-d8 = 96%
4-Bromofluorobenzene = 103%
1,2-Dichloroethane-d4= 98%

CHAIN OF CUSTODY RECORD

R.I. Analytical Laboratories, Inc.

41 Illinois Avenue
Warwick, RI 02888-3007
Tel: 800-937-2580
Fax: 401-738-1970

131 Coolidge St, Suite 105
Hudson, MA 01749-1331
Tel: 800-937-2580
Fax: 978-568-0078

02-24-09

Date Collected	Time Collected	Field Sample Identification	Grab or Composite	# of Containers & Type C	Preservation Code P	Matrix Code M	TPH (8100M)	Phenols	PCBs	SVOCs	Total Metals*	Cyanide	TSS, Hex Chrom, Tot Res Chlorine	8260 (Full List)	* Metals Sb As Se Ag
2/26/09	1100	RW-1		2A	S	GW	X								
↓	↓	RW-1		1A	S	GW		X							
		RW-1		4A	NP	GW			X	X					
		RW-1		1P	N	GW					X				
		RW-1		1P	SB	GW						X			
		RW-1		1P	NP	GW							X		
		RW-1		2V	H	GW								X	

(12) SB

Client Information

Company Name: EBI Consultants
Address: 21 B Street
City / State / Zip: Burlington, MA 01803
Telephone: 781-273-2500 Fax: 781-273-3311
Contact Person: Mike Penzo

Project Information

Project Name: Everett
P.O. Number:
Project Number: 12
Report To: Mike Penzo
Phone: 781-418
Sampled by: B. White
Email report to these addresses: mpe
Quote No: EBI090211

Relinquished By	Date	Time	Received By	Date	Time
[signature]	2/27/09	10:35 AM	[signature]	2/27/09	10:35 AM
[signature]	2/27/09	16:20	[signature]	2/27/09	16:20
[signature]	2/27/09	17:40	[signature]	2/27/09	17:40

Project Comments

Circle if applicable: GW-1, GW-2, GW-3, S-1, S-2, S-3

MCP Data Enhancement QC Package? Yes (No)

Temp. Upon Receipt 4.3 °C

Containers: P=Poly, G=Glass, AG=Amber Glass, V=Vial, St=Sterile Preservatives: A=Ascorbic Acid, NH4=NH_4Cl, H=HCl, M=MeOH, N=HNO_3, NP=None, S=H_2SO_4, SB=NaHSO
Matrix Codes: GW=Groundwater, SW=Surface Water, WW=Wastewater, DW=Drinking Water, S=Soil, SL=Sludge, A=Air, B=Bulk/Solid, O=_____

R.I. ANALYTICAL
Specialists in Environmental Services

CERTIFICATE OF ANALYSIS

EBI Consultants
Attn: Mr. Michael Penzo
21 B Street
Burlington, MA 01803

Date Received: 04/23/2009
Date Reported: 05/01/2009
Date Revised: 05/05/2009
P.O. #:
Work Order #: 0904-06865

DESCRIPTION: PROJECT# 12090028 REPEAT SAMPLING - EVERETT REMEDIATION

Subject sample(s) has/have been analyzed by our Warwick, R.I. laboratory with the attached results.

Reference: All parameters were analyzed by U.S. EPA approved methodologies.
The specific methodologies are listed in the methods column of the Certificate Of Analysis.

Data qualifiers (if present) are explained in full at the end of a given sample's analytical results.

Certification #: RI-033, MA-RI015, CT-PH-0508, ME-RI015
NH-253700 A & B, USDA S-41844

If you have any questions regarding this work, or if we may be of further assistance, please contact us.

Approved by:

R.I. Analytical Laboratories, Inc.

CERTIFICATE OF ANALYSIS

EBI Consultants
Date Received: 04/23/2009
Work Order #: 0904-06865

Approved by: _____
Data Reporting

Sample #: 001
SAMPLE DESCRIPTION: RW-1
SAMPLE TYPE: GRAB
SAMPLE DATE/TIME: 4/23/2009 @ 10:00

PARAMETER	SAMPLE RESULTS	DET. LIMIT	UNITS	METHOD	DATE ANALYZED	ANALYST
Total Residual Chlorine	<500	500	ug/l	SM 4500CL G	04/23/2009	CAA
Hexavalent Chromium	18	10	ug/l	SM3500-CR D	04/23/2009	CAA
Dissolved Metals						
Iron	7170	100	ug/l	EPA 200.7	04/29/2009	VMY
Total Metals						
Iron	11300	100	ug/l	EPA 200.7	04/29/2009	VMY
Silver	<10	10	ug/l	EPA 200.7	04/29/2009	VMY
Total Metals						
Antimony	6.0	2.0	ug/l	EPA 200.8	04/30/2009	LW
Arsenic	4.3	1.0	ug/l	EPA 200.8	04/30/2009	LW
Organic Compounds						
1,2-Dibromoethane (EDB)	<0.02	0.02	ug/l	EPA 504.1	04/30/2009	RGM
Volatile Organic Compounds						
Tertiary Amyl Methyl Ether (TAME)	0.5	0.5	ug/l	EPA 524.2	04/29/2009	MMM
Surrogates			RANGE	EPA 524.2	04/29/2009	MMM
4-Bromofluorobenzene	112		80-120%	EPA 524.2	04/29/2009	MMM
1,2-Dichlorobenzene-d4	99		80-120%	EPA 524.2	04/29/2009	MMM
Volatile Organic Compounds						
1,4-Dioxane	<3	3	ug/l	SW-846 8260B	04/24/2009	MMM
Surrogates			RANGE	SW-846 8260B	04/24/2009	MMM
1,4- Dioxane-d8	108		70-130%	SW-846 8260B	04/24/2009	MMM

Total Residual Chlorine - Increased detection limit due to sample matrix.

R.I. ANALYTICAL
Specialists in Environmental Services

Case Narrative

Date: 5/1/2009

EBI Consultants
Attn: Mr. Michael Penzo
F21 B Street
Burlington, MA 01803

Project: 12090028 REPEAT SAMPLING – EVERETT REMEDIATION

RIAL WO# 0904-06865

The following exceptions were noted for this Work Order:

The method requested for Total Residual Chlorine is not listed in the table of contents for compendium of MCP analytical methods. Therefore, there is no guideline for presumptive certainty. Total Residual Chlorine also had an Increased detection limit due to sample matrix.

For the Volatile Organic Compound 1,4-Dioxane, an LCSD was not run with this project.

Most of the Volatile Organic Compounds Method 8260B LCS/LCSD percent recoveries were within the recommended range of 70-130% except for; Tertiary Amyl Methyl Ether (TAME) (LCSD 145%). Method guidelines are recoveries between 70 to 130% and RPD's of less than 25%. All nonconforming compounds require narration. There was no additional sample remaining for a re-analysis.

Dissolved Metals were filtered upon receipt.

There were no additional exceptions or analytical issues to discuss concerning the testing requirements for the project.

Michael J. Hobin
QA/QC Manager

R.I. ANALYTICAL
Specialists in Environmental Services

Customer Name : EBI Consultants

W.O. Number 0904-06865

MADEP MCP Response Action Analytical Report Certification Form			
Laboratory Name:	R.I. Analytical Laboratories	Work Order No:	0904-06865
Project / Location:	PROJECT# 12090028 REPEAT SAMPLING - EVERETT REMEDIATION	MADEP RTN 1 :	
This Form provides certifications for the following data set: [list Laboratory Sample ID Number(s)]			
0904-06865-001 through 0904-06865-001			

Sample Matrices: ☒ Groundwater ☐ Soil / Sediment ☐ Drinking Water ☐ Other :

MCP SW-846 Methods as specified in MADEP Compendium of Analytical Methods (select all that apply)					
	8260B (☒)	8151A ( )	8330 ( )	6010B( )	7470A/1A( )
	8270C ( )	8081A ( )	VPH ( )	6020 ( )	9014M 2 ( )
	8082 ( )	8021B ( )	EPH ( )	7000 S 3 ( )	OTHER (☒)

1 List Release Tracking Number (RTN) if known
2 MCP SW-846 Method 9014 or MADEP Physiologically Available Cyanide (PAC) Method
3 MCP SW-846 Methods 7000 Series. List individual method and analyte

An affirmative response to questions A, B, C and D is required for "Presumptive Certainty" status

A	Were all samples received by the laboratory in a condition consistent with that described on the Chain-of Custody documentation for the data set?	☒ Yes	☐ No 1
B	Were all QA/QC procedures required for the specified analytical method(s) included in this report followed, including the requirement to note and discuss in a narrative QC data that did not meet appropriate performance standards or guidelines?	☒ Yes	☐ No 1
C	Does the analytical data included in this report meet all the requirements for "Presumptive Certainty", as described in Section 2.0 of the MADEP document CAM VII A, "Quality Assurance and Quality Control Guidelines for the Aquisition and Reporting of Analytical Data"?	☒ Yes	☐ No 1
D	VPH and EPH methods only: Was the VPH or EPH method run without significant modifications, as specified in Section 11.3?	☐ Yes	☐ No 1

A response to questions E and F below is required for "Presumptive Certainty" status

E	Were all QC performance standards and recommendations for the specified methods achieved?	☐ Yes	☒ No 1
F	Were results for all analyte-list compounds/elements for the specified method(s) reported?	☒ Yes	☐ No 1

1 *All NO answers must be addressed in an attached Environmental Laboratory case narrative.*

I, the undersigned, attest under the pains and penalties of perjury that, based upon my personal inquiry of those responsible for obtaining the information, the material contained in this analytical report is, to the best of my knowledge and belief, accurate and complete.

Signature _____ Date: 5/1/05

Mike Hobin / QA/QC Manager

41 Illinois Avenue, Warwick, RI 02888
Phone: 401.737.8500 Fax: 401.738.1970

nelac

131 Coolidge Street, Suite 105, Hudson, MA 01749
Phone: 978.568.0041 Fax: 978.568.0078

R.I. ANALYTICAL
Specialists in Environmental Services

QA/QC Report

Client: EBI Consultants
WO #: 0904-06865
Date: 5/1/09

-Method Blanks Results-

Parameter	Units	Results	Date Analyzed
Total Residual Chlorine	mg/l	<0.1	4/23/2009
Hexavalent Chromium	mg/l	<0.02	4/23/2009
EDB by Method 504 (Aqueous)			
1,2-Dibromoethane (EDB)	ug/l	<0.02	4/30/2009
Volatile Organics by Method 524.2 (Aqueous)			
Tertiary Amyl Methyl Ether	ug/l	<1.0	4/29/2009
Surrogates	**RANGE**		4/29/2009
4-Bromofluorobenzene	80-120%	95	4/29/2009
1,2-Dichlorobenzene-d4	80-120%	99	4/29/2009
Volatile Organics by Method 8260			
1,4-Dioxane	ug/l	<3	4/24/2009
1,4- Dioxane-d8	70-130%	94	4/24/2009
Metals (Aqueous)			
Iron	ug/l	<100	4/29/2009
Silver	ug/l	<10	4/29/2009
Metals by ICPMS (Aqueous)			
Antimony	ug/l	<2.0	4/30/2009
Arsenic	ug/l	<1.0	4/30/2009

-LCS/LCS Duplicate Data Results-

Parameter	Spike Conc	LCS Conc	LCS % Rec	LCS Dup Conc	LCS DUP % Rec	% RPD	Date Analyzed
Total Residual Chlorine	1.01	1.017	101			0	4/23/2009

QA/QC Report

Client: EBI Consultants
WO #: 0904-06865
Date: 5/1/09

-LCS/LCS Duplicate Data Results-

Parameter	Spike Conc	LCS Conc	LCS % Rec	LCS Dup Conc	LCS DUP % Rec	% RPD	Date Analyzed
Hexavalent Chromium	0.200	0.199	100	0.198	99	1	4/30/2009
Volatile Organics by Method 8260							
1,4-Dioxane	5.0	4.92	98			0	4/24/2009
1,4-Dioxane-d8		101				0	4/24/2009
EDB by Method 504 (Aqueous)							
1,2-Dibromoethane (EDB)	5.0	4.6	92	5.3	106	14	4/30/2009
Volatile Organics by Method 524.2 (Aqueous)							
Tertiary Amyl Methyl Ether	5.00	5.44	108	6.68	134	20	4/29/2009
Surrogates							4/29/2009
4-Bromofluorobenzene		98		96			4/29/2009
1,2-Dichlorobenzene-d4		98		100			4/29/2009
Metals (Aqueous)							
Iron	10000	10900	109	10700	107	2	4/29/2009
Silver	1000	996	100	983	98	1	4/29/2009
Metals by ICPMS (Aqueous)							
Antimony	100	104	104	119	119	13	4/30/2009
Arsenic	100	85.4	85	95.7	96	11	4/30/2009

CHAIN OF CUSTODY RECORD

R.I. Analytical Laboratories, Inc.

41 Illinois Avenue
Warwick, RI 02888-3007
Tel: 800-937-2580
Fax: 401-738-1970

131 Coolidge St, Suite 105
Hudson, MA 01749-1331
Tel: 800-937-2580
Fax: 978-568-0078

Date Collected	Time Collected	Field Sample Identification	Grab or Composite	# of Containers & Type T	Preservation Code P	Matrix Code M		Sb – MDL 50 µg/L	As – MDL 5 µg/L	Fe, Total – MDL 100 µg/L	Ag – MDL 10 µg/L	Residual Chlorine – MDL 11 µg/L	Fe, Dissolved – MDL 100 µg/L	Lab filtration for dissolved Fe	Cr^{+6} – MDL 10 µg/L	1,4-dioxane – MDL 50 µg/L
4/23/09	1000	RW-1	G	1 P	N	GW		X	X	X	X					
			G	1 P	NP	GW						X	X	X	X	
			G	3 V	H	GW										X

5553

Client Information		Project Information	
Company Name:	EBI Consultants	Project Name:	Repeat Sampling – Everett F
Address:	21 B Street	P.O. Number:	Project Numbe
City / State / Zip:	Burlington, MA 01803	Report To:	Michael Penzo Phone: 61
Telephone:	617-418-2321 Fax: 617-418-2371	Sampled by:	B White
Contact Person:	Michael Penzo	Quote No:	EBI090431

Email report to these addresses:

Relinquished By	Date	Time	Received By	Date	Time
	4/23/09	1430		4/23/09	16:48
	4-23-09	16:05		4-23-09	16:05
	4-23-09	17:40		4-23-09	17:40

Project Comments

Circle if applicable: **GW-1**

MCP Data Enhancement QC Package? **Yes**

5553

1°C

Container Types: P=Poly, G=Glass, AG=Amber Glass, V=Vial, St=Sterile

Preservation Codes: NP=None, N=HNO_3, H=HCl, S=H_2SO_4, SH=NaOH, SB=NaHS

Matrix Codes: GW=Groundwater, SW=Surface Water, WW=Wastewater, DW=Drinking Water, S=Soil, SL=Sludge, A=Air, B=Bulk/Solid, O=

Commonwealth of Massachusetts

Division of Fisheries & Wildlife

MassWildlife

Wayne F. MacCallum, *Director*

4/16/2009

Michael Penzo
EBI Consulting
21 B Street
Burlington MA 01803

RE: Project Location: 120 Tremont St
Town: EVERETT
NHESP Tracking No : 09-26501

To Whom It May Concern:

Thank you for contacting the Natural Heritage and Endangered Species Program ("NHESP") of the MA Division of Fisheries & Wildlife for information regarding state-listed rare species in the vicinity of the above referenced site.

Based on the information provided, the NHESP has determined that at this time the site is not mapped as Priority or Estimated Habitat. The NHESP database does not contain any state-listed species records in the immediate vicinity of this site.

This evaluation is based on the most recent information available in the NHESP database, which is constantly being expanded and updated through ongoing research and inventory. If you have any questions regarding this letter please contact Emily Holt, Endangered Species Review Assistant, at (508) 389-6361.

Sincerely,

Thomas W. French

Thomas W. French, Ph.D.

The Commonwealth of Massachusetts

William Francis Galvin, Secretary of the Commonwealth
Massachusetts Historical Commission

March 31, 2009

Michael A. Penzo
EBI Consulting
21 B Street
Burlington, MA 01803

RE: 120 Tremont Street Remediation, 120 Tremont Street, Everett, MA. MHC# RC.46096

Dear Mr. Levenson:

Thank you for submitting the Project Notification Form (PNF) to the Massachusetts Historical Commission for the project referenced above. Staff of the MHC have reviewed the information you submitted and our files. The project consists of the application for coverage under a US Environmental Project Agency National Pollutant Discharge and Elimination System permit to discharge treated groundwater from an existing commercial facility at 120 Tremont Street in Everett.

Since there is no new construction or demolition, the project has "no potential to cause effects" (36 CFR 800.3(a)(1)) to historic properties.

These comments are offered to assist in compliance with Section 106 of the National Historic Preservation Act of 1966, as amended (36 CFR 800) and the Massachusetts General Laws, Chapter 9, Section 26-27C (950 CMR 71). If you have any questions or require further information, please contact Tim Hollis at this office.

Sincerely,

Jonathan K. Patton
Archaeologist/Preservation Planner
Massachusetts Historical Commission

xc: Jean Brochi, EPA

RECEIVED
APR 07 2009
By

220 Morrissey Boulevard, Boston, Massachusetts 02125
(617) 727-8470 • Fax (617) 727-5128
www.state.ma.us/sec/mhc