GZA
GeoEnvironmental, Inc.

Engineers and Scientists

MAG-910400

December 9, 2008
File No. 13190.36

One Edgewater Drive
Norwood
Massachusetts
02062
781-278-3700
FAX 781-278-5701
http://www.gza.com

Mr. Victor Alvarez
United States Environmental Protection Agency – Region 1
1 Congress Street, Suite 1100
Boston, Massachusetts 02114-2023

Re: Submittal of Notice of Intent (NOI)
Excavation Dewatering – Outfall 009 Channel
244 Worcester Street
North Grafton, Massachusetts
MassDEP - RTN No. 2-0535

Dear Mr. Alvarez:

GZA GeoEnvironmental, Inc. (GZA), on behalf of Wyman Gordon Company (WG), has prepared this Notice of Intent (NOI) for application of a National Pollutant Discharge Elimination System (NPDES) Remediation General Permit (RGP) for proposed remediation activities at the above referenced location (Figures 1 and 2). This NOI is being submitted for conducting Phase IV Remedial Implementation Plan (RIP) activities at the East Side Wetland location as per Massachusetts Contingency Plan (MCP: 310 CMR 40.0870). The RIP for the East Side Wetland was submitted to the Massachusetts Department of Environmental Protection on September 27, 2007 and defines the proposed excavation activities for remediation of the East Side Wetland. As there is a likely need to discharge water generated from dewatering of the wetland area to be excavated, the enclosed NOI form provides required information on the general site conditions, proposed treatment system, discharge location and receiving water, and analytical results for this East Side Wetland area identified as NPDES Outfall 009 channel which is shown in the Figure 3.

The excavation, dewatering, and discharge of treated water are scheduled to begin late summer 2009.

SITE DESCRIPTION

WG's North Grafton plant, located at 244 Worcester Street (Route 122), manufactures large specialty metal parts, primarily for the military and the aerospace industry. Operations conducted at the plant include forging, milling, and etching.

The East Side Wetland is bounded to the west by the East Side Upland area east of the plant and to the east by East Brook, which flows from Route 122 northward (south boundary) to a point near the CSX railroad tracks (north boundary), then turns east to the Quinsigamond River.

PROPOSED ACTIVITIES

The objective of the remedial action is to remove surficial sediments and sludge from portions of the NPDES 009 impact area. The proposed location of excavation is depicted in Figure 3. As shown on this figure, visibly-impacted sediments within the first (i.e., western-most) 170-feet of the Outfall 009 Drainage Channel, and a narrow swath of wetland soil along the northern bank of this section of channel, will be excavated. The Outfall 009 Drainage Channel is a man-made drainage ditch that now functions as a stream with in-stream habitat and associated bordering vegetated wetland. The depth of visible petroleum in the channel extends as deep as about 1.5 feet, therefore approximately 140 cubic yards of soil and sediment will be transported to an off-site facility for disposal.

Water generated during dewatering activities will be treated as described in the attached NOI submittal, sampled as required and discharged approximately 225 feet from the location of the proposed dewatering treatment system beyond the area of channel excavation as shown in the Figure 3.

Please do not hesitate to contact the undersigned at (781) 278-3700 if you have any questions or require further information.

Very truly yours,

GZA GEOENVIRONMENTAL, INC.

John A. Colbert
Senior Project Manger

Gregg McBride
Principal

Enclosures:

Attachment 1: NOI Form
Attachment 2: Figure 1 - Site Locus Map
Attachment 3: Figure 2 - Overview of Wyman Gordon Company
Attachment 4: Figure 3 - Proposed Activity Plan of NPDES Outfall 009 Channel
Attachment 5: Figure 4 - Process Flow Diagram
Attachment 6: Laboratory Analytical Results
Attachment 7: Supplemental Information - 7Q10 data for Outfall 009 Channel
Attachment 8: Copy of a letter from Tribal Historic Preservation Officer

cc: Mr. Bradford C. Middlesworth, P.E.
MassDEP – Northeast Region
File

ATTACHMENT 1

NOI FORM

B. Suggested Form for Notice of Intent (NOI) for the Remediation General Permit

1. General site information. Please provide the following information about the site:

a) Name of **facility/site:** Wyman-Gordon		**Facility/site** address: 244 Worcester St., North Gra	
Location of **facility/site:** North Grafton, MA longitude: -71.72 latitude: 42.23	Facility SIC code(s):	Street: Worcester	
b) Name of **facility/site owner:** Wyman-Gordon		Town: North Grafton	
Email address of owner:		State: MA	Zip: 01536	County
Telephone no.of facility/site **owner:** (508) 839-8183				
Fax no. of facility/site **owner:**		**Owner** is (check one): 1. Federal____ 2. State/Tribal____ 3. Private ✓ 4. other, if so, describe:		
Address of **owner** (if different from site):				
Street:				
Town:	State:	Zip:	County:	
c) Legal name of **operator:** Bradford C. Middlesworth	**Operator** telephone no: (508) 839-8158			
	Operator fax no.:		**Operator** email: bmiddlesw	
Operator contact name and title:				
Address of **operator** (if different from owner):	Street:			
Town:	State:	Zip:	County:	

d) Check "yes" or "no" for the following:

1. Has a prior NPDES permit exclusion been granted for the discharge? Yes___ No ✓, if "yes," number:
2. Has a prior NPDES application (Form 1 & 2C) ever been filed for the discharge? Yes___ No ✓, if "yes," date and tracking #:
3. Is the discharge a "new discharge"as defined by 40 CFR 122.2? Yes ✓ No___
4. For sites in Massachusetts, is the discharge covered under the MA Contingency Plan (MCP) and exempt from state permitting? Yes ✓ No__

e) Is site/facility subject to any State permitting or other action which is causing the generation of discharge? Yes ✓ No___ If "yes," please list: 1. site identification # assigned by the state of NH or MA: MA 2. permit or license # assigned: MCP RTN 2-0535 3. state agency contact information: name, location, and telephone number: Michael LeBlanc, DEP Central Regional Office, 627 Main St., Worcester, MA 01608, 508-767-2830	f) Is the site/facility covered by any other EPA permit, including: 1. multi-sector storm water general permit? Y___ N ✓, if Y, number: 2. phase I or II construction storm water general permit? Y___ N ✓, if Y, number: 3. individual NPDES permit? Y ✓ N___, if Y, number: MA 0004341 4. any other water quality related permit? Y___ N ✓, if Y, number:

2. Discharge information. Please provide information about the discharge, (attaching additional sheets as needed) including:

a) Describe the discharge activities for which the owner/applicant is seeking coverage:

During the Phase IV implementation activities at the east side wetland location, there is a likely need to discharge water generated from the dewatering of the wetland areas to be excavated.

b) Provide the following information about each discharge:	1) Number of discharge points: 1	2) What is the **maximum** and **average flow rate** of discharge (in cubic feet per second, ft3/s)? Max. flow 0.22 cfs Average flow 0.11cfs Is maximum flow a **design value**? Y ✓ N____ For average flow, include the units and appropriate notation if this value is a design value or estimate if not available.

3) Latitude and longitude of each discharge within 100 feet: pt.1:long. -7143.34 lat. 4213.88; pt.2: long._____ lat._____; pt.3: long._____ lat._____;
pt.4:long._____ lat._____; pt.5: long._____ lat._____; pt.6:long._____ lat._____; pt.7: long._____ lat._____; pt.8:long._____ lat._____; etc.

4) If hydrostatic testing, total volume of the discharge (gals):	5) Is the discharge intermittent ✓ or seasonal_____? Is discharge ongoing Yes ✓ No_____?__

c) Expected dates of discharge (mm/dd/yy): start 06/01/09 end 12/30/09

d) Please attach a line drawing or flow schematic showing water flow through the facility including: (SEE FIGURE 4)
1. sources of intake water, 2. contributing flow from the operation, 3. treatment units, and 4. discharge points and receiving waters(s).

3. Contaminant information. In order to complete this section, the applicant will need to take a minimum of one sample of the untreated water and have it analyzed for **all** of the parameters listed in Appendix III. Historical data, (i.e., data taken no more than 2 years prior to the effective date of the permit) may be used if obtained pursuant to: i. Massachusetts' regulations 310 CMR 40.0000, the Massachusetts Contingency Plan ("Chapter 21E"); ii. New Hampshire's Title 50 RSA 485-A: Water Pollution and Waste Disposal or Title 50 RSA 485-C: Groundwater Protection Act; or iii. an EPA permit exclusion letter issued pursuant to 40 CFR 122.3, provided the data was analyzed with test methods that meet the requirements of this permit. Otherwise, a new sample shall be taken and analyzed.

a) Based on the analysis of the sample(s) of the untreated influent, the applicant must check the box of the sub-categories that the potential discharge falls within.

Gasoline Only	VOC Only	Primarily Metals	Urban Fill Sites	Contaminated Sumps	Mixed Contaminants	Aquifer Testing
Fuel Oils (and Other Oils) only	VOC with Other Contaminants	Petroleum with Other Contaminants ✓	Listed Contaminated Sites	Contaminated Dredge Condensates	Hydrostatic Testing of Pipelines/Tanks	Well Development or Rehabilitation

b) Based on the analysis of the untreated influent, the applicant must indicate whether each listed chemical is **believed present** or **believed absent** in the potential discharge. Attach additional sheets as needed.

PARAMETER	Believe Absent	Believe Present	# of Samples (1 minimum)	Type of Sample (e.g., grab)	Analytical Method Used (method #)	Minimum Level (ML) of Test Method (ug/L)	Maximum daily value		Avg. daily value	
							concentration (ug/l)	mass (kg)	concentration (ug/l)	mass (kg)
1. Total Suspended Solids		✓	1	grab	160.2	2000	3,000,000		3,000,000	
2. Total Residual Chlorine	✓		1	grab	Sm4500-CLD	20	BDL		BDL	
3. Total Petroleum Hydrocarbons		✓	1	grab	1664	500	10,000		10,000	
4. Cyanide	✓		1	grab	335.2	10	BDL		BDL	
5. Benzene	✓		1	grab	8260	0.50	BDL		BDL	
6. Toluene	✓		1	grab	8260	0.50	BDL		BDL	
7. Ethylbenzene	✓		1	grab	8260	0.50	BDL		BDL	
8. (m,p,o) Xylenes	✓		1	grab	8260	1.50	BDL		BDL	
9. Total BTEX[4]	✓		1	grab	8260	3.0	BDL		BDL	

[4] BTEX = Sum of Benzene, Toluene, Ethylbenzene, total Xylenes.

PARAMETER	Believe Absent	Believe Present	# of Samples (1 min-imum)	Type of Sample (e.g., grab)	Analytical Method Used (method #)	Minimum Level (ML) of Test Method (ug/L)	Maximum daily value		Avg. daily value	
							concentration (ug/l)	mass (kg)	concentration (ug/l)	mass (kg)
10. Ethylene Dibromide [5] (1,2- Dibromo-methane)	✓		1	grab	8260	1.0	BDL		BDL	
11. Methyl-tert-Butyl Ether (MtBE)	✓		1	grab	8260	0.50	BDL		BDL	
12. tert-Butyl Alcohol (TBA)	✓		1	grab	8260	13	BDL		BDL	
13. tert-Amyl Methyl Ether (TAME)	✓		1	grab	8260	1.0	BDL		BDL	
14. Naphthalene	✓		1	grab	8260	1.0	BDL		BDL	
15. Carbon Tetra-chloride	✓		1	grab	8260	0.50	BDL		BDL	
16. 1,4 Dichlorobenzene	✓		1	grab	8260	0.50	BDL		BDL	
17. 1,2 Dichlorobenzene	✓		1	grab	8260	0.50	BDL		BDL	
18. 1,3 Dichlorobenzene	✓		1	grab	8260	0.50	BDL		BDL	
19. 1,1 Dichloroethane	✓		1	grab	8260	0.50	BDL		BDL	
20. 1,2 Dichloroethane	✓		1	grab	8260	0.50	BDL		BDL	
21. 1,1 Dichloroethylene	✓		1	grab	8260	0.50	BDL		BDL	
22. cis-1,2 Dichloro-ethylene	✓		1	grab	8260	0.50	BDL		BDL	
23. Dichloromethane (Methylene Chloride)	✓		1	grab	8260	0.50	BDL		BDL	
24. Tetrachloroethylene	✓		1	grab	8260	0.50	BDL		BDL	

[5] EDB is a groundwater contaminant at fuel spill and pesticide application sites in New England.

PARAMETER	Believe Absent	Believe Present	# of Samples (1 min-imum)	Type of Sample (e.g., grab)	Analytical Method Used (method #)	Minimum Level (ML) of Test Method (ug/L)	Maximum daily value		Avg. daily Value	
							concentration (ug/l)	mass (kg)	concentration (ug/l)	mass (kg)
25. 1,1,1 Trichloroethane	✓		1	grab	8260	0.50	BDL		BDL	
26. 1,1,2 Trichloroethane	✓		1	grab	8260	0.50	BDL		BDL	
27. Trichloroethylene	✓		1	grab	8260	0.50	BDL		BDL	
28. Vinyl Chloride	✓		1	grab	8260	0.50	BDL		BDL	
29. Acetone	✓		1	grab	8260	13	BDL		BDL	
30. 1,4 Dioxane	✓		1	grab	8260	50	BDL		BDL	
31. Total Phenols	✓		1	grab	8270	360	BDL		BDL	
32. Pentachlorophenol	✓		1	grab	8270	50	BDL		BDL	
33. Total Phthalates [6] (Phthalate esthers)	✓		1	grab	8270	65	BDL		BDL	
34. Bis (2-Ethylhexyl) Phthalate [Di-(ethylhexyl) Phthalate]	✓		1	grab	8270	10	BDL		BDL	
35. Total Group I Polycyclic Aromatic Hydrocarbons (PAH)										
a. Benzo(a) Anthracene		✓	1	grab	8270	2.0	2.2		2.2	
b. Benzo(a) Pyrene		✓	1	grab	8270	2.0	2.1		2.1	
c. Benzo(b)Fluoranthene		✓	1	grab	8270	2.0	3.6		3.6	
d. Benzo(k) Fluoranthene	✓		1	grab	8270	2.0	BDL		BDL	
e. Chrysene		✓	1	grab	8270	2.0	2.8		2.8	

[6] The sum of individual phthalate compounds.

PARAMETER	Believe Absent	Believe Present	# of Samples (1 minimum)	Type of Sample (e.g., grab)	Analytical Method Used (method #)	Minimum Level (ML) of Test Method (ug/L)	Maximum daily value		Average daily value	
							concentration (ug/l)	mass (kg)	concentration (ug/l)	mass (kg)
f. Dibenzo(a,h) anthracene	✓		1	grab	8270	2.0	BDL		BDL	
g. Indeno(1,2,3-cd) Pyrene	✓		1	grab	8270	2.0	BDL		BDL	
36. Total Group II Polycyclic Aromatic Hydrocarbons (PAH)										
h. Acenaphthene	✓		1	grab	8270	2.0	BDL		BDL	
i. Acenaphthylene	✓		1	grab	8270	2.0	BDL		BDL	
j. Anthracene	✓		1	grab	8270	2.0	BDL		BDL	
k. Benzo(ghi) Perylene	✓		1	grab	8270	2.0	BDL		BDL	
l. Fluoranthene		✓	1	grab	8270	2.0	6.4		6.4	
m. Fluorene	✓		1	grab	8270	2.0	BDL		BDL	
n. Naphthalene-	✓		1	grab	8270	2.0	BDL		BDL	
o. Phenanthrene		✓	1	grab	8270	2.0	2.7		2.7	
p. Pyrene		✓	1	grab	8270	2.0	5.3		5.3	
37. Total Polychlorinated Biphenyls (PCBs)	✓		1	grab	608	3.5	BDL		BDL	
38. Antimony	✓		1	grab	6010B	25.0	BDL		BDL	
39. Arsenic		✓	1	grab	6010B	5.0	8.8		8.8	
40. Cadmium	✓		1	grab	6010B	5.0	BDL		BDL	
41. Chromium III		✓	1	grab	6010B	5.0	7.2		7.2	
42. Chromium VI	✓		1	grab	SM3500CRD	10.0	BDL		BDL	

PARAMETER	Believe Absent	Believe Present	# of Samples (1 minimum)	Type of Sample (e.g., grab)	Analytical Method Used (method #)	Minimum Level (ML) of Test Method (ug/L)	Maximum daily value		Avg. daily value	
							concentration (ug/l)	mass (kg)	concentration (ug/l)	mass (kg)
43. Copper		✓	1	grab	6010B	5.0	31.0		31.0	
44. Lead		✓	1	grab	6010B	10	45		45	
45. Mercury	✓		1	grab	7470A	0.2	BDL		BDL	
46. Nickel		✓	1	grab	6010B	10.0	11		11	
47. Selenium	✓		1	grab	6010B	25	BDL		BDL	
48. Silver	✓		1	grab	6010B	5	BDL		BDL	
49. Zinc		✓	1	grab	6010B	10	50		50	
50. Iron		✓	1	grab	6010B	25	3300		3300	
Other (describe):										

c) For discharges where **metals** are believed present, please fill out the following:

Step 1: Do any of the metals in the influent have a **reasonable potential** to exceed the effluent limits in Appendix III (i.e., the limits set at zero to five dilutions)? Y ✓ N ☐	If yes, which metals? Copper, Nickel, Lead, Zinc, Iron
Step 2: For any metals which have **reasonable potential** to exceed the **Appendix III** limits, calculate the **dilution factor (DF)** using the formula in Part I.A.3.c) (step 2) of the NOI instructions or as determined by the State prior to the submission of this NOI. What is the dilution factor for applicable metals? Metals: Copper, Lead, Iron DF: 1.16 (SEE ATTACHED STREAM STAT REPORT)	Look up the limit calculated at the corresponding dilution factor in **Appendix IV.** Do any of the metals in the **influent** have the potential to exceed the corresponding **effluent** limits in Appendix IV (i.e., is the influent concentration above the limit set at the calculated dilution factor)? Y ✓ N ☐ If "Yes," list which metals: Copper, Lead, Iron

4. Treatment system information. Please describe the treatment system using separate sheets as necessary, including:

a) A description of the treatment system, including a schematic of the proposed or existing treatment system:

b) Identify each applicable treatment unit (check all that apply):	Frac. tank ✓	Air stripper	Oil/water separator	Equalization tanks	Bag filter ✓	GAC filter ✓
	Chlorination	Dechlorination	Other (please describe):			

c) Proposed **average** and **maximum flow rates** (gallons per minute) for the discharge and the **design flow rate**(s) (gallons per minute) of the treatment system:
Average flow rate of discharge 50 gpm Maximum flow rate of treatment system 100 gpm Design flow rate of treatment system 50 gpm

d) A description of chemical additives being used or planned to be used (attach MSDS sheets): NONE

5. Receiving surface water(s). Please provide information about the receiving water(s), using separate sheets as necessary:

a) Identify the discharge pathway:	Direct____	Within facility__	Storm drain____	River/brook ✓	Wetlands ✓	Other (describe):

b) Provide a narrative description of the discharge pathway, including the name(s) of the receiving waters:
Treated water discharges via temporary piping (approx. 225 ft.) to the discharge channel. Discharged water flows via a channel and wetlands to East Brook.

c) Attach a detailed map(s) indicating the site location and location of the outfall to the receiving water:
1. For multiple discharges, number the discharges sequentially.
2. For indirect dischargers, indicate the location of the discharge to the indirect conveyance and the discharge to surface water
The map should also include the location and distance to the nearest sanitary sewer as well as the locus of nearby sensitive receptors (based on USGS topographical mapping), such as surface waters, drinking water supplies, and wetland areas.

d) Provide the state water quality classification of the receiving water Class B,

e) Provide the reported or calculated seven day-ten year low flow (7Q10) of the receiving water 0.0363 cfs
Please attach any calculation sheets used to support stream flow and dilution calculations.

f) Is the receiving water a listed 303(d) water quality impaired or limited water? Yes ✓ No____ If yes, for which pollutant(s)? Phosphorous
Is there a TMDL? Yes ✓ No____ If yes, for which pollutant(s)? Phosphorous

6. Results of Consultation with Federal Services: Please provide the following information according to requirements of Part I.B.4 and Appendices II and VII.

a) Are any listed threatened or endangered species, or designated critical habitat, in proximity to the discharge? Yes____ No ✓
Has any consultation with the federal services been completed ? Yes___ No ✓ or is consultation underway? Yes ____ No ✓
What were the results of the consultation with the U.S. Fish and Wildlife Service and/or National Marine Fisheries Service (check one):
a "no jeopardy" opinion? _____or written concurrence____ on a finding that the discharges are not likely to adversely affect any endangered species or critical habitat?

b) Are any historic properties listed or eligible for listing on the National Register of Historic Places located on the facility or site or in proximity to the discharge? Yes ✓ No_____
Yes_____ No ✓ Have any state or tribal historic preservation officer been consulted in this determination (Massachusetts only)?

7. Supplemental information. :

Please provide any supplemental information. Attach any analytical data used to support the application. Attach any certification(s) required by the general permit.

8. Signature Requirements: The Notice of Intent must be signed by the operator in accordance with the signatory requirements of 40 CFR Section 122.22, including the following certification:

I certify under penalty of law that this document and all attachments were prepared under my direction or supervision in accordance with a system designed to assure that qualified personnel properly gather and evaluate the information submitted. Based on my inquiry of the person or persons who manage the system, or those persons directly responsible for gathering the information, I certify that the information submitted is, to the best of my knowledge and belief, true, accurate, and complete. I certify that I am aware that there are significant penalties for submitting false information, including the possibility of fine and imprisonment for knowing violations.

Facility/Site Name: Wyman-Gordon

Operator signature: Bradford Middlesworth

Title: Division Environmental Manager

Date: 12/9/08

ATTACHMENT 2

FIGURE 1 – SITE LOCUS MAP

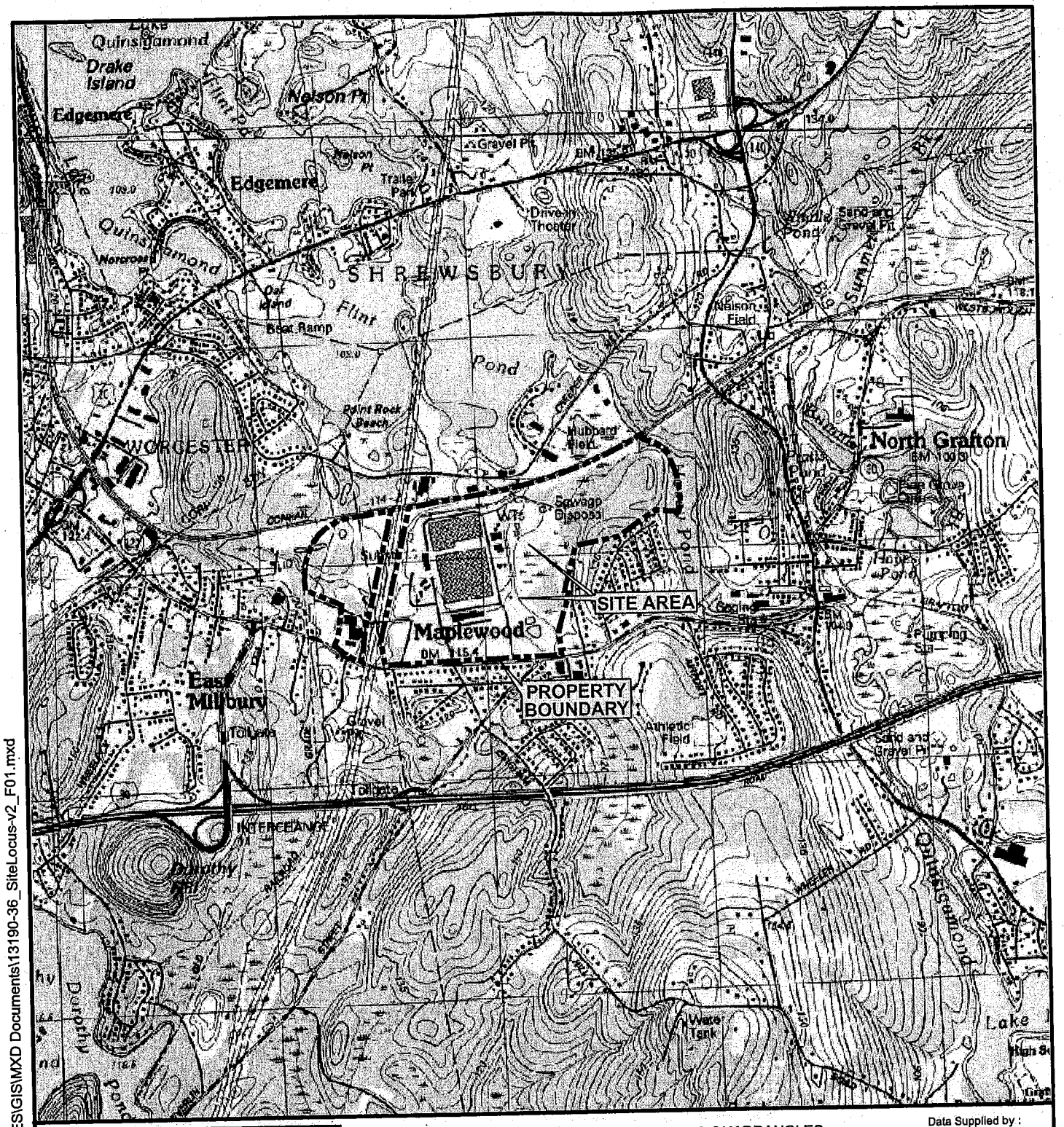

SOURCE : SCANNED USGS TOPOGRAPHIC QUADRANGLES

Data Supplied by :

RES\GIS\MXD Documents\13190-36_SiteLocus-v2_F01.mxd

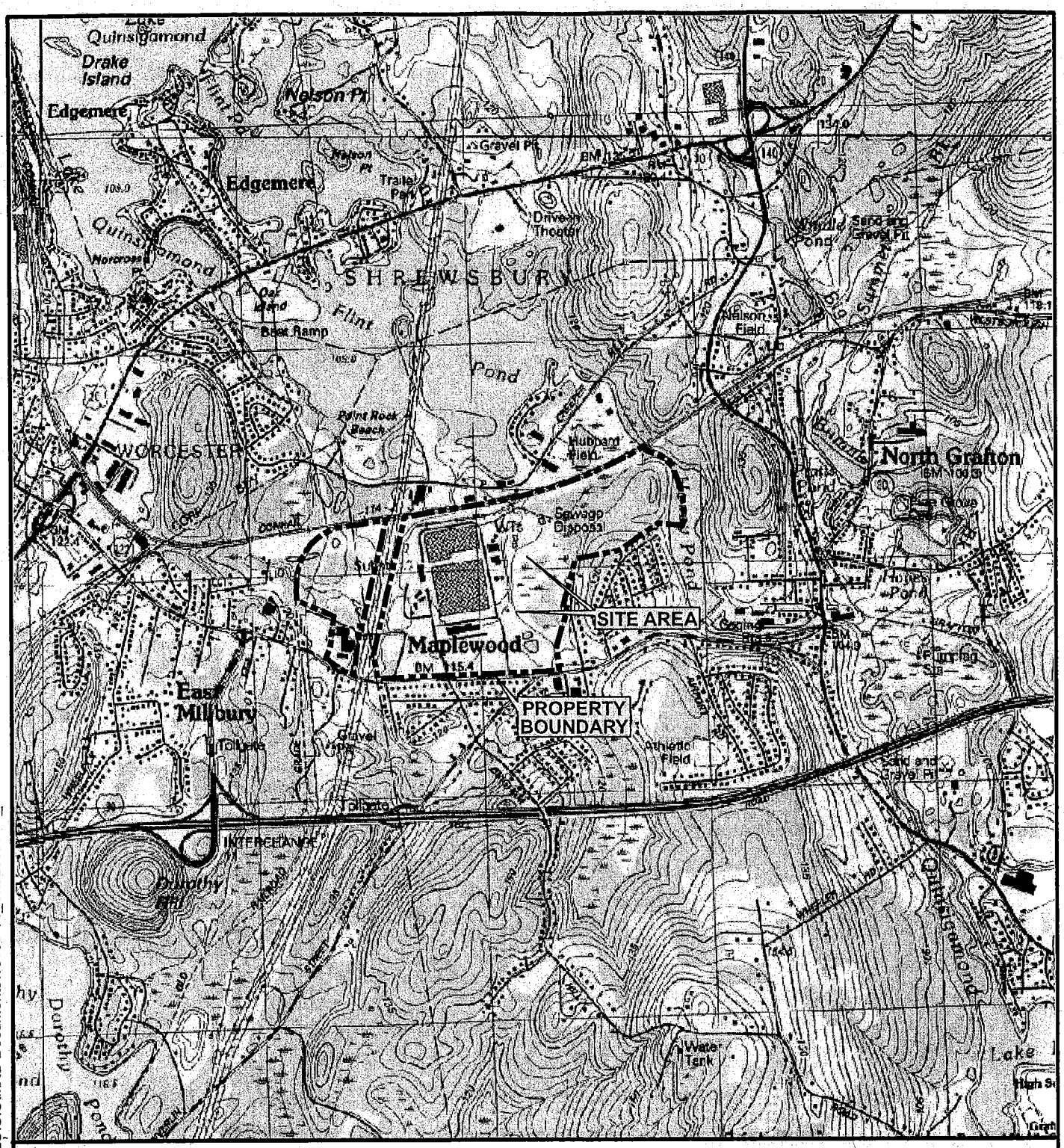

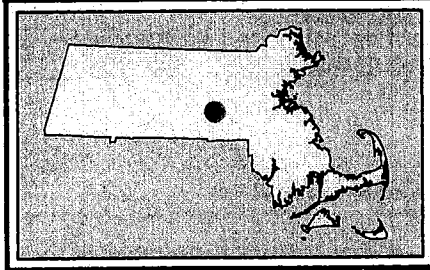

SOURCE : SCANNED USGS TOPOGRAPHIC QUADRANGLES
SCANNED BY THE MASSACHUSETTS EXECUTIVE OFFICE OF
ENVIRONMENTAL AFFAIRS, MASSGIS. DISTRIBUTED JUNE, 2001.

Data Supplied by : MASS GIS

0 1,000 2,000 4,000 6,000 Feet

N W E S

GZA	PROJ. MGR.: MS DESIGNED BY: MS REVIEWED BY: GWM OPERATOR: GAS/EMD DATE: 05-05-2008	USGS LOCUS MAP WYMAN GORDON NORTH GRAFTON, MASSACHUSETTS	JOB NO. 01.0013190.36 FIGURE NO. 1

J:\13,000-14,999\13190\13190-36.SMS\FIGURES\GIS\MXD Documents\13190-36_SiteLocus-v2_F01.mxd

ATTACHMENT 3

FIGURE 2 – OVERVIEW OF WYMAN GORDON COMPANY

FLINT POND
EASTERN FLINT POND
CITY OF WORCESTER
TOWN OF MILLBURY
TOWN OF GRAFTON
TOWN OF MILLBURY
BONNY BROOK COVE
REMEDIATION PHASE II
BONNY BROOK WETLANDS "NORTH POOL"
CSX RAILROAD TRACKS
REMEDIATION PHASE II
BONNY BROOK WETLANDS "SOUTH POOL"
REMEDIATION PHASE III
WEST SIDE WETLANDS PCB AREA
REMEDIATION PHASE I
EAST SIDE WETLANDS NE17
MAIN BUILDING
LARGE WEST POND
REMEDIATION PHASE IV
WEST SIDE WETLANDS SMALL POND
SMALL WEST POND
BONNY BROOK
REMEDIATION PHASE I
NPDES 009 CHANNEL AND BVW
ROUTE 122 GRAFTON ROAD
ROUTE 122 WORCESTER STREET

ATTACHMENT 4

FIGURE 3 – PROPOSED ACTIVITY PLAN OF OUTFALL 009 CHANNEL

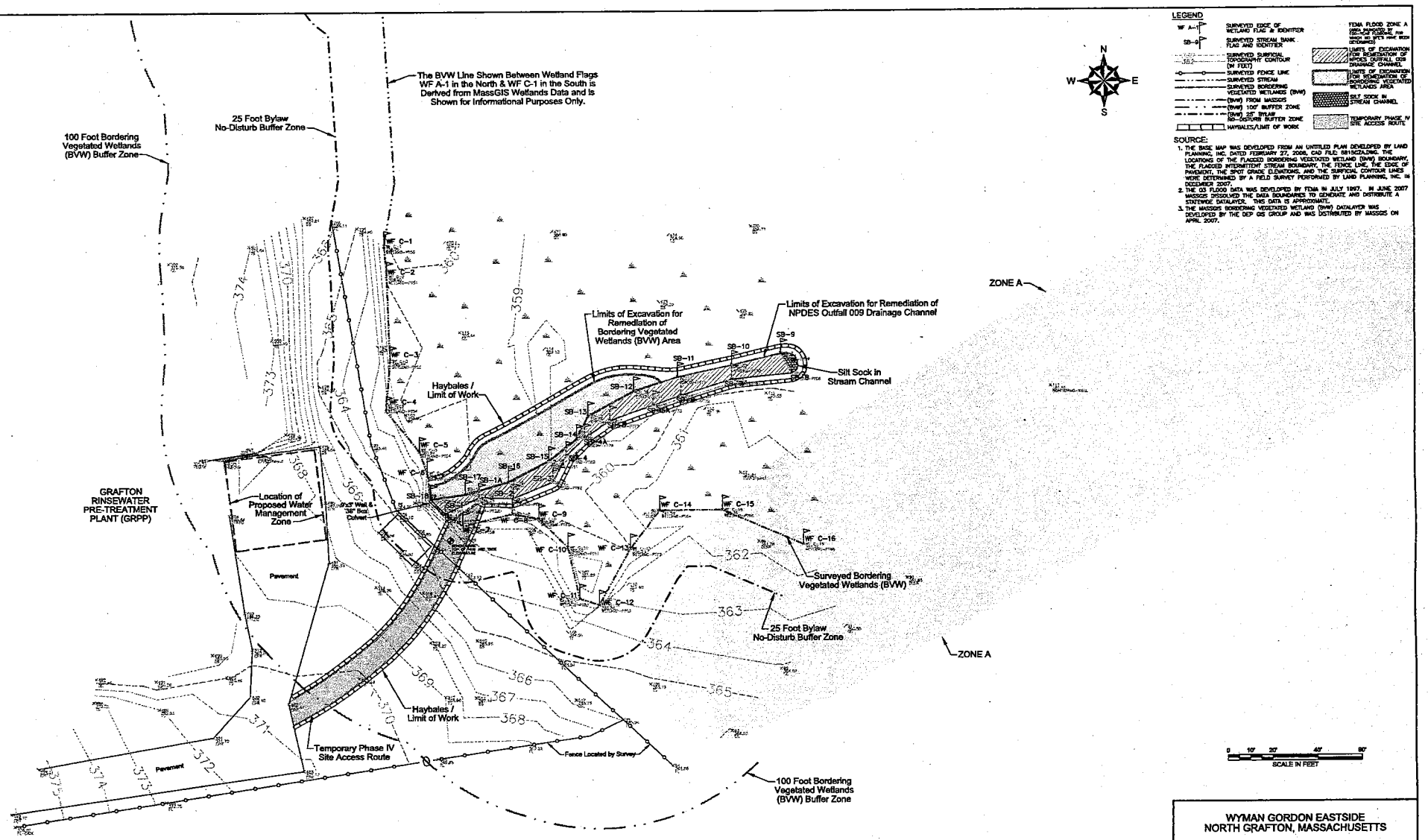

LEGEND

- WF A-1 — SURVEYED EDGE OF WETLAND FLAG & IDENTIFIER
- SB-9 — SURVEYED STREAM BANK FLAG AND IDENTIFIER
- 362 — SURVEYED SURFICIAL TOPOGRAPHY CONTOUR (IN FEET)
- SURVEYED FENCE LINE
- SURVEYED STREAM
- SURVEYED BORDERING VEGETATED WETLANDS (BVW)
- (BVW) FROM MASSGIS
- (BVW) 100' BUFFER ZONE
- (BVW) 25' BYLAW NO-DISTURB BUFFER ZONE
- HAYBALES/LIMIT OF WORK
- FEMA FLOOD ZONE A (AREA PLANNED BY FEMA FOR FLOODING, FOR WHICH NO BFE'S HAVE BEEN DETERMINED)
- LIMITS OF EXCAVATION FOR REMEDIATION OF NPDES OUTFALL 009 DRAINAGE CHANNEL
- LIMITS OF EXCAVATION FOR REMEDIATION OF BORDERING VEGETATED WETLANDS AREA
- SILT SOCK IN STREAM CHANNEL
- TEMPORARY PHASE IV SITE ACCESS ROUTE

SOURCE:

1. THE BASE MAP WAS DEVELOPED FROM AN UNTITLED PLAN DEVELOPED BY LAND PLANNING, INC. DATED FEBRUARY 27, 2008, CAD FILE: 6815CZA.DWG. THE LOCATIONS OF THE FLAGGED BORDERING VEGETATED WETLAND (BVW) BOUNDARY, THE FLAGGED INTERMITTENT STREAM BOUNDARY, THE FENCE LINE, THE EDGE OF PAVEMENT, THE SPOT GRADE ELEVATIONS, AND THE SURFICIAL CONTOUR LINES WERE DETERMINED BY A FIELD SURVEY PERFORMED BY LAND PLANNING, INC. IN DECEMBER 2007.
2. THE 03 FLOOD DATA WAS DEVELOPED BY FEMA IN JULY 1997. IN JUNE 2007 MASSGIS DISSOLVED THE DATA BOUNDARIES TO GENERATE AND DISTRIBUTE A STATEWIDE DATALAYER. THIS DATA IS APPROXIMATE.
3. THE MASSGIS BORDERING VEGETATED WETLAND (BVW) DATALAYER WAS DEVELOPED BY THE DEP GIS GROUP AND WAS DISTRIBUTED BY MASSGIS ON APRIL 2007.

WYMAN GORDON EASTSIDE
NORTH GRAFTON, MASSACHUSETTS

PROPOSED ACTIVITY PLAN
NPDES 009 CHANNEL (CLOSEUP)

PREPARED BY: GZA GeoEnvironmental, Inc. Engineers and Scientists, 146 MONTGOMERY PROVIDENCE, RHODE ISLAND 02903 (401) 421-4140		PREPARED FOR: WYMAN GORDON	
PROJ. MGR: MS	REVIEWED BY: GWM	CHECKED BY: GWM	FIGURE 3
DESIGNED BY: MS	DRAWN BY: EMD	SCALE: 1" = 20'	
DATE: 05-14-2008	PROJECT NO. 01.0013190.36	REVISION NO.	

APPROVED:

UNLESS SPECIFICALLY STATED BY WRITTEN AGREEMENT, THIS DRAWING IS THE SOLE PROPERTY OF GZA GEOENVIRONMENTAL, INC. (GZA). THE INFORMATION SHOWN ON THE DRAWING IS SOLELY FOR USE BY GZA'S CLIENT OR THE CLIENT'S DESIGNATED REPRESENTATIVE FOR THE SPECIFIC PROJECT AND LOCATION REFERRED TO THE DRAWING. THE DRAWING SHALL NOT BE TRANSFERRED, REUSED, COPIED, OR ALTERED IN ANY MANNER FOR USE AT ANY OTHER LOCATION OR FOR ANY OTHER PURPOSE WITHOUT THE PRIOR WRITTEN CONSENT OF GZA. ANY TRANSFER, REUSE, OR MODIFICATION TO THE DRAWING BY THE CLIENT OR OTHERS, WITHOUT THE PRIOR WRITTEN EXPRESS CONSENT OF GZA, WILL BE AT THE USER'S SOLE RISK AND WITHOUT ANY RISK OR LIABILITY TO GZA.

© 2008 - GZA GeoEnvironmental, Inc. GZA-J:\13.000-14.999\13190\13190-36.SAVE\FIGURES\CAD\13190-36_SitePlan-v2_MASSF.dwg [FIG-3 009 Channel] September 29, 2008 - 1:44pm grepper.swmt

ATTACHMENT 5

FIGURE 4 – PROCESS FLOW DIAGRAM

©2008– GZA GeoEnvironmental, Inc. GZA–J:\13,000–14,999\13190\13190–36.SMS\FIGURES\CAD\13190–36_Proposed Dewatering System_v2.dwg [FIG 4] November 19, 2008 – 2:26pm gregory.scott

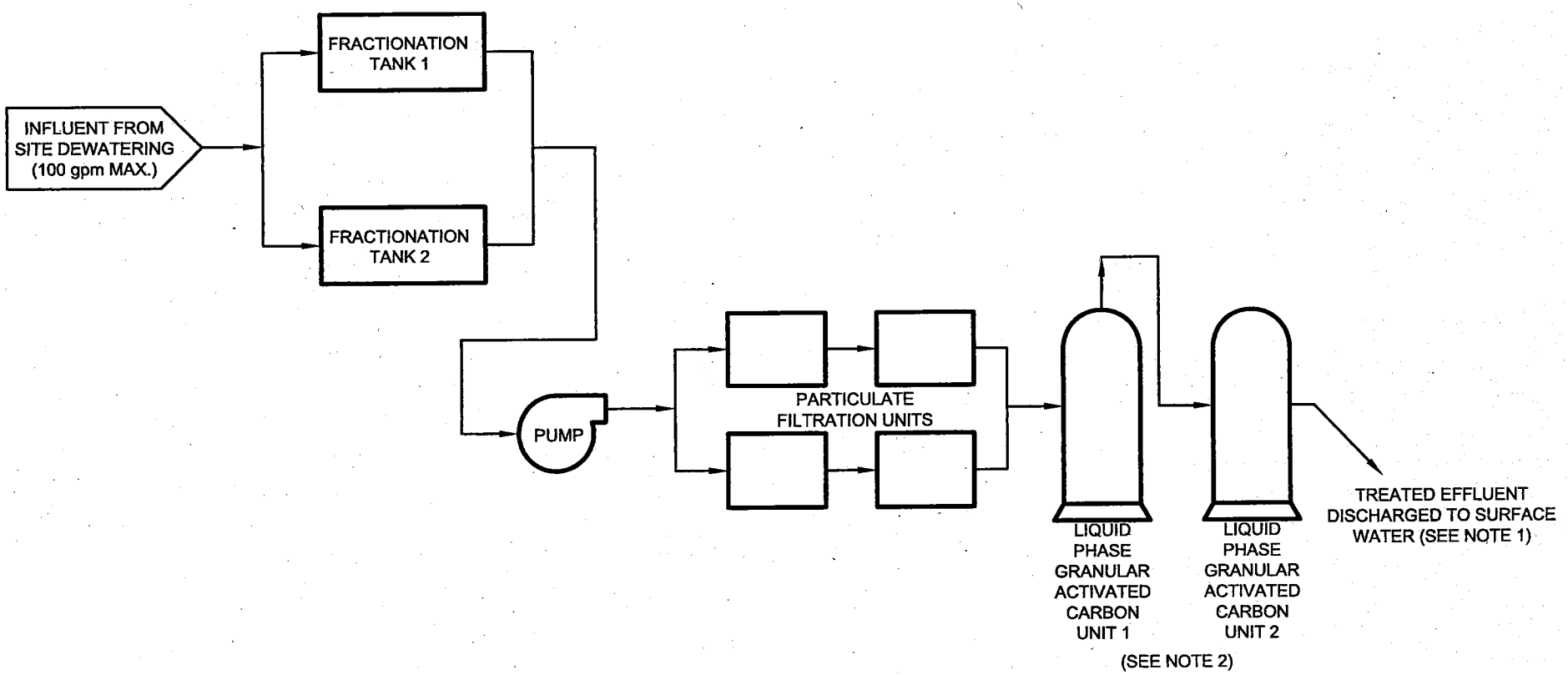

NOTE:

1. DISCHARGE FROM THE VARIOUS LOCATIONS SHALL BE AS FOLLOWS:
   - EAST WETLANDS NE17 = DISCHARGE TO BE LOCATED AT DISCHARGE FOR THE RMF.
   - NPDES 009 CHANNEL = DISCHARGE TO BE TO NPDES 009 CHANNEL DOWNSTREAM OF REMEDIATION AREA.
   - BONNY BROOK = DISCHARGE TO BE TO BONNY BROOK DOWNSTREAM OF REMEDIATION AREA.
2. BASED ON ANALYTICAL RESULTS OF THE DISCHARGE AN IONIZATION EXCHANGE UNIT MAY ALSO BE NEEDED.

UNLESS SPECIFICALLY STATED BY WRITTEN AGREEMENT, THIS DRAWING IS THE SOLE PROPERTY OF GZA GEOENVIRONMENTAL, INC. (GZA). THE INFORMATION SHOWN ON THE DRAWING IS SOLELY FOR USE BY GZA'S CLIENT OR THE CLIENT'S DESIGNATED REPRESENTATIVE FOR THE SPECIFIC PROJECT AND LOCATION IDENTIFIED ON THE DRAWING. THE DRAWING SHALL NOT BE TRANSFERRED, REUSED, COPIED, OR ALTERED IN ANY MANNER FOR USE AT ANY OTHER LOCATION OR FOR ANY OTHER PURPOSE WITHOUT THE PRIOR WRITTEN CONSENT OF GZA. ANY TRANSFER, REUSE, OR MODIFICATION TO THE DRAWING BY THE CLIENT OR OTHERS, WITHOUT THE PRIOR WRITTEN EXPRESS CONSENT OF GZA, WILL BE AT THE USER'S SOLE RISK AND WITHOUT ANY RISK OR LIABILITY TO GZA.

PREPARED BY: GZA GeoEnvironmental, Inc. Engineers and Scientists, One Edgewater Drive, Norwood, Massachusetts (781)278-3700	EAST WETLAND AND BONNY BROOK NORTH GRAFTON, MASSACHUSETTS	PROJ MGR: JAC DESIGNED BY: SC REVIEWED BY: JAC	DATE 09-29-2008	FIGURE
PREPARED FOR: WYMAN GORDON a PCC Company	PROCESS FLOW DIAGRAM PROPOSED DEWATERING TREATMENT SYSTEM	DRAWN BY: GAS CHECKED BY: RP SCALE: NOT TO SCALE	PROJECT NO. 13190.36 REVISION NO.	4

ATTACHMENT 6

LABORATORY ANALYTICAL RESULTS

GZA GeoEnvironmental, Inc.
106 South Street
Hopkinton, MA 01748
(781) 278-4700

Laboratory Identification Numbers:
MA and ME: **MA092** NH: **2028**
CT: **PH0579** RI: **LAO00236**
NELAC - NYS DOH: **11063**

ANALYTICAL REPORT

GZA GeoEnvironmental, Inc.
One Edgewater Drive
Norwood, MA 02062

Michele Simoneaux

Project No.: **01.0013190.36**
Work Order No.: **0807-00137**
Date Received: **07/23/2008**
Date Reported: **08/06/2008**

SAMPLE INFORMATION

Date Sampled	Matrix	Laboratory ID	Sample ID
~~07/23/2008~~	~~Aqueous~~	~~0807-00137-001~~	~~SW - 1~~
07/23/2008	Aqueous	0807-00137 002	SW - 2

GZA GeoEnvironmental, Inc.
106 South Street
Hopkinton, MA 01748
(781) 278-4700

ANALYTICAL REPORT

GZA GeoEnvironmental, Inc.
One Edgewater Drive
Norwood, MA 02062

Michele Simoneaux

Project Name.: **Wyman-Gordon**
Project No.: **01.0013190.36**

Date Received: **07/23/2008**
Date Reported: **08/06/2008**
Work Order No.: **0807-00137**

Sample ID: **SW - 2**
Sample Date: **07/23/2008**
Sample No.: **002**

Test Performed	Method	Results	Units	Tech	Analysis Date
VOLATILE ORGANICS	EPA 8260			MQS	07/30/2008
Dichlorodifluoromethane	EPA 8260	<1.0	ug/L	MQS	07/30/2008
Chloromethane	EPA 8260	<1.0	ug/L	MQS	07/30/2008
Vinyl Chloride	EPA 8260	<0.50	ug/L	MQS	07/30/2008
Bromomethane	EPA 8260	<1.0	ug/L	MQS	07/30/2008
Chloroethane	EPA 8260	<0.50	ug/L	MQS	07/30/2008
Trichlorofluoromethane	EPA 8260	<1.0	ug/L	MQS	07/30/2008
Diethylether	EPA 8260	<2.5	ug/L	MQS	07/30/2008
Acetone	EPA 8260	<13	ug/L	MQS	07/30/2008
1,1-Dichloroethene	EPA 8260	<0.50	ug/L	MQS	07/30/2008
Freon 113	EPA 8260	<1.0	ug/L	MQS	07/30/2008
Carbon Disulfide	EPA 8260	<25	ug/L	MQS	07/30/2008
Dichloromethane	EPA 8260	<1.0	ug/L	MQS	07/30/2008
tert-Butyl alcohol (TBA)	EPA 8260	<13	ug/L	MQS	07/30/2008
Methyl-Tert-Butyl-Ether	EPA 8260	<0.50	ug/L	MQS	07/30/2008
trans-1,2-Dichloroethene	EPA 8260	<0.50	ug/L	MQS	07/30/2008
1,1-Dichloroethane	EPA 8260	<0.50	ug/L	MQS	07/30/2008
Di-isopropyl ether (DIPE)	EPA 8260	<1.0	ug/L	MQS	07/30/2008
Ethyl tert-butyl ether ETBE	EPA 8260	<1.0	ug/L	MQS	07/30/2008
2-Butanone	EPA 8260	<13	ug/L	MQS	07/30/2008
2,2-Dichloropropane	EPA 8260	<0.50	ug/L	MQS	07/30/2008
cis-1,2-Dichloroethene	EPA 8260	<0.50	ug/L	MQS	07/30/2008
Chloroform	EPA 8260	<0.50	ug/L	MQS	07/30/2008
Bromochloromethane	EPA 8260	<0.50	ug/L	MQS	07/30/2008
Tetrahydrofuran	EPA 8260	<5.0	ug/L	MQS	07/30/2008
1,1,1-Trichloroethane	EPA 8260	<0.50	ug/L	MQS	07/30/2008
1,1-Dichloropropene	EPA 8260	<0.50	ug/L	MQS	07/30/2008
Carbon Tetrachloride	EPA 8260	<0.50	ug/L	MQS	07/30/2008
1,2-Dichloroethane	EPA 8260	<0.50	ug/L	MQS	07/30/2008
Benzene	EPA 8260	<0.50	ug/L	MQS	07/30/2008
tert-Amyl methyl ether TAME	EPA 8260	<1.0	ug/L	MQS	07/30/2008
Trichloroethene	EPA 8260	<0.50	ug/L	MQS	07/30/2008
1,4-Dioxane	EPA 8260	<50	ug/L	MQS	07/30/2008
1,2-Dichloropropane	EPA 8260	<0.50	ug/L	MQS	07/30/2008
Bromodichloromethane	EPA 8260	<0.50	ug/L	MQS	07/30/2008
Dibromomethane	EPA 8260	<0.50	ug/L	MQS	07/30/2008
4-Methyl-2-Pentanone	EPA 8260	<13	ug/L	MQS	07/30/2008

GZA GeoEnvironmental, Inc.
106 South Street
Hopkinton, MA 01748
(781) 278-4700

ANALYTICAL REPORT

GZA GeoEnvironmental, Inc.
One Edgewater Drive
Norwood, MA 02062

Michele Simoneaux

Project Name.: **Wyman-Gordon**
Project No.: **01.0013190.36**

Date Received: **07/23/2008**
Date Reported: **08/06/2008**
Work Order No.: **0807-00137**

Sample ID: **SW - 2**
Sample Date: **07/23/2008**
Sample No.: **002**

Test Performed	Method	Results	Units	Tech	Analysis Date
cis-1,3-Dichloropropene	EPA 8260	<0.50	ug/L	MQS	07/30/2008
Toluene	EPA 8260	<0.50	ug/L	MQS	07/30/2008
trans-1,3-Dichloropropene	EPA 8260	<1.0	ug/L	MQS	07/30/2008
1,1,2-Trichloroethane	EPA 8260	<0.50	ug/L	MQS	07/30/2008
2-Hexanone	EPA 8260	<13	ug/L	MQS	07/30/2008
1,3-Dichloropropane	EPA 8260	<0.50	ug/L	MQS	07/30/2008
Tetrachloroethene	EPA 8260	<0.50	ug/L	MQS	07/30/2008
Dibromochloromethane	EPA 8260	<0.50	ug/L	MQS	07/30/2008
1,2-Dibromoethane (EDB)	EPA 8260	<1.0	ug/L	MQS	07/30/2008
Chlorobenzene	EPA 8260	<0.50	ug/L	MQS	07/30/2008
1,1,1,2-Tetrachloroethane	EPA 8260	<0.50	ug/L	MQS	07/30/2008
Ethylbenzene	EPA 8260	<0.50	ug/L	MQS	07/30/2008
m&p-Xylene	EPA 8260	<1.0	ug/L	MQS	07/30/2008
o-Xylene	EPA 8260	<0.50	ug/L	MQS	07/30/2008
Styrene	EPA 8260	<0.50	ug/L	MQS	07/30/2008
Bromoform	EPA 8260	<1.0	ug/L	MQS	07/30/2008
Isopropylbenzene	EPA 8260	<0.50	ug/L	MQS	07/30/2008
1,1,2,2-Tetrachloroethane	EPA 8260	<0.50	ug/L	MQS	07/30/2008
1,2,3-Trichloropropane	EPA 8260	<0.50	ug/L	MQS	07/30/2008
Bromobenzene	EPA 8260	<0.50	ug/L	MQS	07/30/2008
N-Propylbenzene	EPA 8260	<0.50	ug/L	MQS	07/30/2008
2-Chlorotoluene	EPA 8260	<0.50	ug/L	MQS	07/30/2008
1,3,5-Trimethylbenzene	EPA 8260	<0.50	ug/L	MQS	07/30/2008
4-Chlorotoluene	EPA 8260	<0.50	ug/L	MQS	07/30/2008
tert-Butylbenzene	EPA 8260	<0.50	ug/L	MQS	07/30/2008
1,2,4-Trimethylbenzene	EPA 8260	<0.50	ug/L	MQS	07/30/2008
sec-Butylbenzene	EPA 8260	<0.50	ug/L	MQS	07/30/2008
p-Isopropyltoluene	EPA 8260	<0.50	ug/L	MQS	07/30/2008
1,3-Dichlorobenzene	EPA 8260	<0.50	ug/L	MQS	07/30/2008
1,4-Dichlorobenzene	EPA 8260	<0.50	ug/L	MQS	07/30/2008
n-Butylbenzene	EPA 8260	<0.50	ug/L	MQS	07/30/2008
1,2-Dichlorobenzene	EPA 8260	<0.50	ug/L	MQS	07/30/2008
1,2-Dibromo-3-Chloropropane	EPA 8260	<2.5	ug/L	MQS	07/30/2008
1,2,4-Trichlorobenzene	EPA 8260	<0.50	ug/L	MQS	07/30/2008
Hexachlorobutadiene	EPA 8260	<0.50	ug/L	MQS	07/30/2008
Naphthalene	EPA 8260	<1.0	ug/L	MQS	07/30/2008
1,2,3-Trichlorobenzene	EPA 8260	<0.50	ug/L	MQS	07/30/2008

GZA GeoEnvironmental, Inc.
106 South Street
Hopkinton, MA 01748
(781) 278-4700

ANALYTICAL REPORT

GZA GeoEnvironmental, Inc.
One Edgewater Drive
Norwood, MA 02062

Michele Simoneaux

Project Name.: **Wyman-Gordon**
Project No.: **01.0013190.36**

Date Received: **07/23/2008**
Date Reported: **08/06/2008**
Work Order No.: **0807-00137**

Sample ID: **SW - 2**
Sample Date: **07/23/2008**
Sample No.: **002**

Test Performed	Method	Results	Units	Tech	Analysis Date
Surrogates:	EPA 8260				
***1,2-Dichloroethane-D4	EPA 8260	83.8	% R	MQS	07/30/2008
***Toluene-D8	EPA 8260	88.4	% R	MQS	07/30/2008
***4-Bromofluorobenzene	EPA 8260	90.4	% R	MQS	07/30/2008
Preparation	EPA 5030B	0.5	CF	MQS	07/30/2008
SEMI-VOLATILE ORGANICS	EPA 8270			RJD	07/31/2008
ACID FRACTION:	EPA 8270				
Phenol	EPA 8270	<10	ug/L	RJD	07/31/2008
2-Chlorophenol	EPA 8270	<10	ug/L	RJD	07/31/2008
2-Methylphenol	EPA 8270	<10	ug/L	RJD	07/31/2008
3&4-Methylphenol	EPA 8270	<10	ug/L	RJD	07/31/2008
2-Nitrophenol	EPA 8270	<10	ug/L	RJD	07/31/2008
2,4-Dimethylphenol	EPA 8270	<10	ug/L	RJD	07/31/2008
Benzoic Acid	EPA 8270	<10	ug/L	RJD	07/31/2008
2,4-Dichlorophenol	EPA 8270	<10	ug/L	RJD	07/31/2008
4-Chloro-3-Methylphenol	EPA 8270	<20	ug/L	RJD	07/31/2008
2,4,6-Trichlorophenol	EPA 8270	<10	ug/L	RJD	07/31/2008
2,4,5-Trichlorophenol	EPA 8270	<10	ug/L	RJD	07/31/2008
2,4-Dinitrophenol	EPA 8270	<100	ug/L	RJD	07/31/2008
4-Nitrophenol	EPA 8270	<50	ug/L	RJD	07/31/2008
4,6-Dinitro-2-Methylphenol	EPA 8270	<50	ug/L	RJD	07/31/2008
Pentachlorophenol	EPA 8270	<50	ug/L	RJD	07/31/2008
BASE-NEUTRAL FRACTION:					
n-Nitrosodimethylamine	EPA 8270	<10	ug/L	RJD	07/31/2008
bis(2-Chloroethyl)Ether	EPA 8270	<10	ug/L	RJD	07/31/2008
1,3-Dichlorobenzene	EPA 8270	<10	ug/L	RJD	07/31/2008
1,4-Dichlorobenzene	EPA 8270	<10	ug/L	RJD	07/31/2008
Benzyl Alcohol	EPA 8270	<20	ug/L	RJD	07/31/2008
1,2-Dichlorobenzene	EPA 8270	<10	ug/L	RJD	07/31/2008
bis(2-Chloroisopropyl)Ether	EPA 8270	<10	ug/L	RJD	07/31/2008
n-Nitrosodi-n-Propylamine	EPA 8270	<10	ug/L	RJD	07/31/2008
Hexachloroethane	EPA 8270	<10	ug/L	RJD	07/31/2008
Nitrobenzene	EPA 8270	<10	ug/L	RJD	07/31/2008
Isophorone	EPA 8270	<10	ug/L	RJD	07/31/2008
bis(2-Chloroethoxy)Methane	EPA 8270	<10	ug/L	RJD	07/31/2008
1,2,4-Trichlorobenzene	EPA 8270	<10	ug/L	RJD	07/31/2008
Naphthalene	EPA 8270	<2.0	ug/L	RJD	07/31/2008

GZA GeoEnvironmental, Inc.
106 South Street
Hopkinton, MA 01748
(781) 278-4700

ANALYTICAL REPORT

GZA GeoEnvironmental, Inc.
One Edgewater Drive
Norwood, MA 02062

Michele Simoneaux

Project Name.: **Wyman-Gordon**
Project No.: **01.0013190.36**

Date Received: **07/23/2008**
Date Reported: **08/06/2008**
Work Order No.: **0807-00137**

Sample ID: **SW - 2**
Sample Date: **07/23/2008**
Sample No.: **002**

Test Performed	Method	Results	Units	Tech	Analysis Date
4-Chloroaniline	EPA 8270	<20	ug/L	RJD	07/31/2008
Hexachlorobutadiene	EPA 8270	<10	ug/L	RJD	07/31/2008
2-Methylnaphthalene	EPA 8270	<2.0	ug/L	RJD	07/31/2008
Hexachlorocyclopentadiene	EPA 8270	<50	ug/L	RJD	07/31/2008
2-Chloronaphthalene	EPA 8270	<10	ug/L	RJD	07/31/2008
2-Nitroaniline	EPA 8270	<50	ug/L	RJD	07/31/2008
Dimethylphthalate	EPA 8270	<10	ug/L	RJD	07/31/2008
Acenaphthylene	EPA 8270	<2.0	ug/L	RJD	07/31/2008
2,6-Dinitrotoluene	EPA 8270	<10	ug/L	RJD	07/31/2008
3-Nitroaniline	EPA 8270	<50	ug/L	RJD	07/31/2008
Acenaphthene	EPA 8270	<2.0	ug/L	RJD	07/31/2008
Dibenzofuran	EPA 8270	<10	ug/L	RJD	07/31/2008
2,4-Dinitrotoluene	EPA 8270	<10	ug/L	RJD	07/31/2008
Diethylphthalate	EPA 8270	<10	ug/L	RJD	07/31/2008
Fluorene	EPA 8270	<2.0	ug/L	RJD	07/31/2008
4-Chlorophenyl Phenyl Ether	EPA 8270	<10	ug/L	RJD	07/31/2008
4-Nitroaniline	EPA 8270	<20	ug/L	RJD	07/31/2008
n-Nitrosodiphenylamine	EPA 8270	<10	ug/L	RJD	07/31/2008
4-Bromophenyl Phenyl Ether	EPA 8270	<10	ug/L	RJD	07/31/2008
Hexachlorobenzene	EPA 8270	<10	ug/L	RJD	07/31/2008
Phenanthrene	EPA 8270	2.7	ug/L	RJD	07/31/2008
Anthracene	EPA 8270	<2.0	ug/L	RJD	07/31/2008
Carbazole	EPA 8270	<10	ug/L	RJD	07/31/2008
di-n-Butylphthalate	EPA 8270	<15	ug/L	RJD	07/31/2008
Fluoranthene	EPA 8270	6.4	ug/L	RJD	07/31/2008
Pyrene	EPA 8270	5.3	ug/L	RJD	07/31/2008
Butylbenzylphthalate	EPA 8270	<10	ug/L	RJD	07/31/2008
Benzo [a] Anthracene	EPA 8270	2.2	ug/L	RJD	07/31/2008
3,3'-Dichlorobenzidine	EPA 8270	<20	ug/L	RJD	07/31/2008
Chrysene	EPA 8270	2.8	ug/L	RJD	07/31/2008
bis(2-Ethylhexyl)Phthalate	EPA 8270	<10	ug/L	RJD	07/31/2008
di-n-Octylphthalate	EPA 8270	<10	ug/L	RJD	07/31/2008
Benzo [b] Fluoranthene	EPA 8270	3.6	ug/L	RJD	07/31/2008
Benzo [k] Fluoranthene	EPA 8270	<2.0	ug/L	RJD	07/31/2008
Benzo [a] Pyrene	EPA 8270	2.1	ug/L	RJD	07/31/2008
Indeno [1,2,3-cd] Pyrene	EPA 8270	<2.0	ug/L	RJD	07/31/2008
Dibenzo [a,h] Anthracene	EPA 8270	<2.0	ug/L	RJD	07/31/2008

GZA GeoEnvironmental, Inc.
106 South Street
Hopkinton, MA 01748
(781) 278-4700

ANALYTICAL REPORT

GZA GeoEnvironmental, Inc.
One Edgewater Drive
Norwood, MA 02062

Michele Simoneaux

Project Name.: **Wyman-Gordon**
Project No.: **01.0013190.36**

Date Received: **07/23/2008**
Date Reported: **08/06/2008**
Work Order No.: **0807-00137**

Sample ID: **SW - 2**
Sample Date: **07/23/2008**
Sample No.: **002**

Test Performed	Method	Results	Units	Tech	Analysis Date
Benzo [g,h,i] Perylene	EPA 8270	<2.0	ug/L	RJD	07/31/2008
Surrogates:	EPA 8270				
***2-Fluorophenol	EPA 8270	15.7	% R	RJD	07/31/2008
***2-Chlorophenol-D4	EPA 8270	25.6	% R	RJD	07/31/2008
***Nitrobenzene-D5	EPA 8270	45.8	% R	RJD	07/31/2008
***2-Fluorobiphenyl	EPA 8270	32.2	% R	RJD	07/31/2008
***2,4,6-Tribromophenol	EPA 8270	48.2	% R	RJD	07/31/2008
***P-Terphenyl-D14	EPA 8270	49.9	% R	RJD	07/31/2008
Extraction	EPA 3510C	1.0	DF	DAB	07/30/2008
METALS					
Antimony	EPA 6010B	0.0072	mg/L	LLZ	07/24/2008
Arsenic	EPA 6010B	0.20	mg/L	LLZ	07/24/2008
Cadmium	EPA 6010B	0.0021	mg/L	LLZ	07/24/2008
Chromium	EPA 6010B	0.13	mg/L	LLZ	07/24/2008
Copper	EPA 6010B	0.58	mg/L	LLZ	07/24/2008
Lead	EPA 6010B	0.78	mg/L	LLZ	07/24/2008
Mercury	EPA 7470A	<0.00040	mg/L	TN	07/25/2008
Nickel	EPA 6010B	0.16	mg/L	LLZ	07/24/2008
Selenium	EPA 6010B	<0.0050	mg/L	LLZ	07/24/2008
Silver	EPA 6010B	<0.0010	mg/L	LLZ	07/24/2008
Zinc	EPA 6010B	0.95	mg/L	LLZ	07/24/2008
Iron	EPA 6010B	90	mg/L	LLZ	07/25/2008
Hexavalent Chromium	SM 3500CrD	<0.01	mg/L	LLZ	07/23/2008
SUBCONTRACTED ANALYTES					
Total Suspended Solids	EPA 160.2	3000	mg/L	XXX	07/24/2008
Residual Chlorine	EPA 330.1	<0.1	mg/L	XXX	07/23/2008
PESTICIDES AND PCBs	EPA 608				
Total Cyanide	EPA 335.2	<0.01	ug/L	XXX	07/29/2008

GZA GEOENVIRONMENTAL, INC.
ENVIRONMENTAL CHEMISTRY LABORATORY
106 SOUTH ST, HOPKINTON, MA 01748
MASSACHUSETTS LABORATORY I.D. NO. MA092

EPA METHOD 6010B ANALYSIS
Metals by ICP

QUALITY CONTROL - AQUEOUS

DATE PREPARED: 7/24/2008

QC Sample	Method Blank	Lab Control Sample	LC Duplicate	LCS/LCD Diff.
Units	mg/L	% Recovery	% Recovery	RPD
Acceptance Limits	Results	80-120	80-120	20%
Analyte				
Silver (Ag)	<0.0010	89.5	91.2	1.87
Aluminum (Al)	NA	NA	NA	NA
Arsenic (As)	<0.0020	97.3	100	2.80
Boron (B)	NA	NA	NA	NA
Barium (Ba)	NA	NA	NA	NA
Beryllium (Be)	NA	NA	NA	NA
Calcium (Ca)	NA	NA	NA	NA
Cadmium (Cd)	<0.0010	98.2	101	2.45
Cobalt (Co)	NA	NA	NA	NA
Chromium (Cr)	<0.0010	95.9	98.7	2.87
Copper (Cu)	<0.0030	113	115	1.55
Iron (Fe)	<0.0050	103	106	2.90
Magnesium (Mg)	NA	NA	NA	NA
Manganese (Mn)	NA	NA	NA	NA
Molybdenum (Mo)	NA	NA	NA	NA
Nickel (Ni)	<0.0020	98.8	101	2.60
Lead (Pb)	<0.0020	97.7	101	2.88
Antimony (Sb)	<0.0050	96.6	100	3.50
Selenium (Se)	<0.0050	100	103	3.09
Strontium (Sr)	NA	NA	NA	NA
Titanium (Ti)	NA	NA	NA	NA
Thallium (Tl)	NA	NA	NA	NA
Vanadium (V)	NA	NA	NA	NA
Zinc (Zn)	<0.0020	106	109	2.66
Zirconium (Zr)	NA	NA	NA	NA

Matrix Spike / Duplicate Spike performed as per method and reported if assigned on Chain of Custody.

GZA GEOENVIRONMENTAL, INC.
ENVIRONMENTAL CHEMISTRY LABORATORY
106 SOUTH ST, HOPKINTON, MA 01748
MASSACHUSETTS LABORATORY I.D. NO. MA092

EPA METHOD 7470A ANALYSIS
Mercury by Cold Vapor Atomic Absorption

QUALITY CONTROL - AQUEOUS

Date Prepared: 07/24/08

QC Sample Units Acceptance Limits	Method Blank mg/L Results	Lab Control Sample % Recovery 80-120	Lab Control Sample Duplicate % Recovery 80-120	LC/LCD Difference RPD 20%
Analyte				
Mercury (Hg)	<0.00040	101	107	5.97

RPD = Relative Percent Difference

GZA GeoEnvironmental, Inc.
106 South Street
Hopkinton, MA 01748

EPA Method 8260 / 524.2 Aqueous Method Blank (MB) and Laboratory Control Sample/Duplicate (LCS/LCSD) Data

Method Blank

Date Analyzed:	7/30/2008	
Volatile Organics	Conc. ug/L	Acceptance Limit
dichlorodifluoromethane	< 1.0	< 1.0
chloromethane	< 1.0	< 1.0
vinyl chloride	< 0.5	< 0.5
bromomethane	< 1.0	< 1.0
chloroethane	< 0.5	< 0.5
trichlorofluoromethane	< 1.0	< 1.0
diethyl ether	< 2.5	< 2.5
acetone	< 13	< 13
1,1-dichloroethene	< 0.5	< 0.5
FREON-113	< 1.0	< 1.0
iodomethane	< 0.5	< 0.5
carbon disulfide	< 5.0	< 5.0
dichloromethane	< 1.0	< 1.0
tert-butyl alcohol (TBA)	< 13	< 13
acrylonitrile	< 0.5	< 0.5
methyl-tert-butyl-ether	< 0.5	< 0.5
trans-1,2-dichloroethene	< 0.5	< 0.5
1,1-dichloroethane	< 0.5	< 0.5
di-isopropyl ether (DIPE)	< 1.0	< 1.0
ethyl tert-butyl ether (EtBE)	< 1.0	< 1.0
vinyl acetate	< 13	< 13
2-butanone	< 13	< 13
2,2-dichloropropane	< 0.5	< 0.5
cis-1,2-dichloroethene	< 0.5	< 0.5
chloroform	< 0.5	< 0.5
bromochloromethane	< 0.5	< 0.5
tetrahydrafuran	< 5.0	< 5.0
1,1,1-trichloroethane	< 0.5	< 0.5
1,1-dichloropropene	< 0.5	< 0.5
carbon tetrachloride	< 0.5	< 0.5
1,2-dichloroethane	< 0.5	< 0.5
benzene	< 0.5	< 0.5
tert-amyl methyl ether (TAME)	< 1.0	< 1.0
trichloroethene	< 0.5	< 0.5
1,2-dichloropropane	< 0.5	< 0.5
bromodichloromethane	< 0.5	< 0.5
1,4-Dioxane	< 50	< 50
dibromomethane	< 0.5	< 0.5
4-methyl-2-pentanone	< 13	< 13
cis-1,3-dichloropropene	< 0.5	< 0.5
toluene	< 0.5	< 0.5
trans-1,3-dichloropropene	< 1.0	< 1.0
1,1,2-trichloroethane	< 0.5	< 0.5
2-hexanone	< 13	< 13
1,3-dichloropropane	< 0.5	< 0.5
tetrachloroethene	< 0.5	< 0.5
dibromochloromethane	< 0.5	< 0.5
1,2-dibromoethane (EDB)	< 1.0	< 1.0
chlorobenzene	< 0.5	< 0.5
1,1,1,2-tetrachloroethane	< 0.5	< 0.5
ethylbenzene	< 0.5	< 0.5
1,1,2,2-tetrachloroethane	< 0.5	< 0.5
m&p-xylene	< 1.0	< 1.0
o-xylene	< 0.5	< 0.5
styrene	< 0.5	< 0.5
bromoform	< 1.0	< 1.0
isopropylbenzene	< 0.5	< 0.5
1,2,3-trichloropropane	< 0.5	< 0.5
bromobenzene	< 0.5	< 0.5
n-propylbenzene	< 0.5	< 0.5
2-chlorotoluene	< 0.5	< 0.5
1,3,5-trimethylbenzene	< 0.5	< 0.5
trans-1,4-dichloro-2-butene	< 1.0	< 1.0
4-chlorotoluene	< 0.5	< 0.5
tert-butyl-benzene	< 0.5	< 0.5
1,2,4-trimethylbenzene	< 0.5	< 0.5
sec-butyl-benzene	< 0.5	< 0.5
p-isopropyltoluene	< 0.5	< 0.5
1,3-dichlorobenzene	< 0.5	< 0.5
1,4-dichlorobenzene	< 0.5	< 0.5
n-butylbenzene	< 0.5	< 0.5
1,2-dichlorobenzene	< 0.5	< 0.5
1,2-dibromo-3-chloropropane	< 2.5	< 2.5
1,2,4-trichlorobenzene	< 0.5	< 0.5
hexachlorobutadiene	< 0.5	< 0.5
naphthalene	< 1.0	< 1.0
1,2,3-trichlorobenzene	< 0.5	< 0.5

Laboratory Control Sample / Laboratory Control Sample Duplicate

Date Analyzed:	7/30/2008			7/30/2008					
Spike Concentration = 20ug/L	% Recovery	Acceptance Limits	Verdict	% Recovery	Acceptance Limits	Verdict	RPD	Limit	Verdict
dichlorodifluoromethane	127	70-130	ok	127	70-130	ok	0.26	<25	ok
chloromethane	107	70-130	ok	107	70-130	ok	0.75	<25	ok
vinyl chloride	101	80-120	ok	100	80-120	ok	0.55	<25	ok
bromomethane	96.1	70-130	ok	98.1	70-130	ok	2.02	<25	ok
chloroethane	100	70-130	ok	101	70-130	ok	0.89	<25	ok
trichlorofluoromethane	92.7	70-130	ok	93.7	70-130	ok	1.09	<25	ok
diethyl ether	88.6	70-130	ok	88.8	70-130	ok	0.20	<25	ok
acetone	91.9	70-130	ok	92.9	70-130	ok	1.14	<25	ok
1,1-dichloroethene	84.9	80-120	ok	85.2	80-120	ok	0.33	<25	ok
FREON-113	91.0	70-130	ok	92.6	70-130	ok	1.81	<25	ok
iodomethane	84.5	70-130	ok	84.4	70-130	ok	0.14	<25	ok
carbon disulfide	91.2	70-130	ok	92.1	70-130	ok	0.89	<25	ok
dichloromethane	81.4	70-130	ok	80.5	70-130	ok	1.05	<25	ok
tert-butyl alcohol (TBA)	118	70-130	ok	119	70-130	ok	1.08	<25	ok
acrylonitrile	91.1	70-130	ok	89.0	70-130	ok	2.43	<25	ok
methyl-tert-butyl-ether	89.8	70-130	ok	91.3	70-130	ok	1.67	<25	ok
trans-1,2-dichloroethene	85.1	70-130	ok	84.8	70-130	ok	0.32	<25	ok
1,1-dichloroethane	87.5	70-130	ok	87.6	70-130	ok	0.14	<25	ok
di-isopropyl ether (DIPE)	87.5	70-130	ok	88.1	70-130	ok	0.73	<25	ok
ethyl tert-butyl ether (EtBE)	92.1	70-130	ok	93.4	70-130	ok	1.33	<25	ok
vinyl acetate	87.8	70-130	ok	88.2	70-130	ok	0.48	<25	ok
2-butanone	89.5	70-130	ok	89.0	70-130	ok	0.48	<25	ok
2,2-dichloropropane	91.7	70-130	ok	87.7	70-130	ok	4.51	<25	ok
cis-1,2-dichloroethene	83.0	70-130	ok	82.9	70-130	ok	0.14	<25	ok
chloroform	83.8	80-120	ok	84.1	80-120	ok	0.38	<25	ok
bromochloromethane	90.1	70-130	ok	90.3	70-130	ok	0.14	<25	ok
tetrahydrafuran	117	70-130	ok	120	70-130	ok	2.56	<25	ok
1,1,1-trichloroethane	84.9	70-130	ok	86.1	70-130	ok	1.37	<25	ok
1,1-dichloropropene	86.2	70-130	ok	85.9	70-130	ok	0.30	<25	ok
carbon tetrachloride	87.4	70-130	ok	88.4	70-130	ok	1.14	<25	ok
1,2-dichloroethane	90.0	70-130	ok	89.9	70-130	ok	0.09	<25	ok
benzene	85.6	70-130	ok	85.2	70-130	ok	0.40	<25	ok
tert-amyl methyl ether (TAME)	89.7	70-130	ok	88.3	70-130	ok	1.55	<25	ok
trichloroethene	88.3	70-130	ok	87.3	70-130	ok	1.13	<25	ok
1,2-dichloropropane	86.7	80-120	ok	87.1	80-120	ok	0.53	<25	ok
bromodichloromethane	86.0	70-130	ok	86.2	70-130	ok	0.31	<25	ok
1,4-Dioxane	89.9	70-130	ok	82.8	70-130	ok	8.24	<25	ok
dibromomethane	87.8	70-130	ok	88.8	70-130	ok	1.11	<25	ok
4-methyl-2-pentanone	90.8	70-130	ok	92.1	70-130	ok	1.43	<25	ok
cis-1,3-dichloropropene	90.9	70-130	ok	90.5	70-130	ok	0.38	<25	ok
toluene	85.2	80-120	ok	85.4	80-120	ok	0.23	<25	ok
trans-1,3-dichloropropene	93.7	70-130	ok	94.0	70-130	ok	0.29	<25	ok
1,1,2-trichloroethane	88.3	70-130	ok	86.1	70-130	ok	2.51	<25	ok
2-hexanone	98.6	70-130	ok	103	70-130	ok	4.28	<25	ok
1,3-dichloropropane	91.0	70-130	ok	90.4	70-130	ok	0.68	<25	ok
tetrachloroethene	93.2	70-130	ok	93.0	70-130	ok	0.20	<25	ok
dibromochloromethane	95.1	70-130	ok	95.4	70-130	ok	0.36	<25	ok
1,2-dibromoethane (EDB)	92.3	70-130	ok	91.3	70-130	ok	1.13	<25	ok
chlorobenzene	95.2	70-130	ok	94.1	70-130	ok	1.18	<25	ok
1,1,1,2-tetrachloroethane	90.6	70-130	ok	91.0	70-130	ok	0.44	<25	ok
ethylbenzene	89.1	80-120	ok	90.3	80-120	ok	1.32	<25	ok
1,1,2,2-tetrachloroethane	86.4	70-130	ok	87.4	70-130	ok	1.14	<25	ok
m&p-xylene	82.3	70-130	ok	82.2	70-130	ok	0.02	<25	ok
o-xylene	94.3	70-130	ok	94.5	70-130	ok	0.20	<25	ok
styrene	100	70-130	ok	100	70-130	ok	0.33	<25	ok
bromoform	102	70-130	ok	101	70-130	ok	0.44	<25	ok
isopropylbenzene	110	70-130	ok	111	70-130	ok	0.54	<25	ok
1,2,3-trichloropropane	92.5	70-130	ok	96.9	70-130	ok	4.58	<25	ok
bromobenzene	97.3	70-130	ok	97.1	70-130	ok	0.16	<25	ok
n-propylbenzene	100	70-130	ok	100	70-130	ok	0.03	<25	ok
2-chlorotoluene	93.2	70-130	ok	94.3	70-130	ok	1.14	<25	ok
1,3,5-trimethylbenzene	93.1	70-130	ok	93.9	70-130	ok	0.90	<25	ok
trans-1,4-dichloro-2-butene	96.1	70-130	ok	104	70-130	ok	7.72	<25	ok
4-chlorotoluene	94.1	70-130	ok	96.3	70-130	ok	2.31	<25	ok
tert-butyl-benzene	110	70-130	ok	110	70-130	ok	0.06	<25	ok
1,2,4-trimethylbenzene	89.8	70-130	ok	90.8	70-130	ok	1.14	<25	ok
sec-butyl-benzene	91.3	70-130	ok	92.2	70-130	ok	0.98	<25	ok
p-isopropyltoluene	92.3	70-130	ok	92.3	70-130	ok	0.03	<25	ok
1,3-dichlorobenzene	93.6	70-130	ok	94.2	70-130	ok	0.60	<25	ok
1,4-dichlorobenzene	93.7	70-130	ok	94.5	70-130	ok	0.82	<25	ok
n-butylbenzene	94.6	70-130	ok	94.0	70-130	ok	0.66	<25	ok
1,2-dichlorobenzene	92.8	70-130	ok	92.5	70-130	ok	0.31	<25	ok
1,2-dibromo-3-chloropropane	82.3	70-130	ok	89.0	70-130	ok	7.77	<25	ok
1,2,4-trichlorobenzene	98.5	70-130	ok	101	70-130	ok	2.88	<25	ok
hexachlorobutadiene	98.0	70-130	ok	96.6	70-130	ok	1.44	<25	ok
naphthalene	90.4	70-130	ok	94.4	70-130	ok	4.33	<25	ok
1,2,3-trichlorobenzene	94.0	70-130	ok	99.1	70-130	ok	5.36	<25	ok

SMF criteria allows 5 compounds to be outside acceptance limits

Surrogates:	Recovery (%)	Acceptance Limits	Surrogates:	Recovery (%)	Acceptance Limits	Verdict	Recovery (%)	Acceptance Limits	Verdict	RPD	Limit	Verdict
DIBROMOFLUOROMETHANE	90.2	70-130	DIBROMOFLUOROMETHANE	85.4	70-130	ok	86.8	70-130	ok	1.45	<25	ok
1,2-DICHLOROETHANE-D4	89.0	70-130	1,2-DICHLOROETHANE-D4	88.1	70-130	ok	90.0	70-130	ok	2.20	<25	ok
TOLUENE-D8	89.7	70-130	TOLUENE-D8	88.4	70-130	ok	86.8	70-130	ok	1.84	<25	ok
4-BROMOFLUOROBENZENE	90.6	70-130	4-BROMOFLUOROBENZENE	95.5	70-130	ok	95.3	70-130	ok	0.90	<25	ok
1,2-DICHLOROBENZENE-D4	90.4	70-130	1,2-DICHLOROBENZENE-D4	89.5	70-130	ok	91.3	70-130	ok	2.05	<25	ok

Instrument: HP GC/MS "S"

GZA GeoEnvironmental, Inc.
106 South Street
Hopkinton, MA 01748

EPA Method 8260 / 524.2 Aqueous Method Blank (MB) and Laboratory Control Sample/Duplicate (LCS/LCSD) Data

Method Blank

Date Analyzed:	8/1/2008	
Volatile Organics	Conc. ug/L	Acceptance Limit
dichlorodifluoromethane	< 1.0	< 1.0
chloromethane	< 1.0	< 1.0
vinyl chloride	< 0.5	< 0.5
bromomethane	< 1.0	< 1.0
chloroethane	< 0.5	< 0.5
trichlorofluoromethane	< 1.0	< 1.0
diethyl ether	< 2.5	< 2.5
acetone	< 13	< 13
1,1-dichloroethene	< 0.5	< 0.5
FREON-113	< 1.0	< 1.0
iodomethane	< 0.5	< 0.5
carbon disulfide	< 5.0	< 5.0
dichloromethane	< 1.0	< 1.0
tert-butyl alcohol (TBA)	< 13	< 13
acrylonitrile	< 0.5	< 0.5
methyl-tert-butyl-ether	< 0.5	< 0.5
trans-1,2-dichloroethene	< 0.5	< 0.5
1,1-dichloroethane	< 0.5	< 0.5
di-isopropyl ether (DIPE)	< 1.0	< 1.0
ethyl tert-butyl ether (EtBE)	< 1.0	< 1.0
vinyl acetate	< 13	< 13
2-butanone	< 13	< 13
2,2-dichloropropane	< 0.5	< 0.5
cis-1,2-dichloroethene	< 0.5	< 0.5
chloroform	< 0.5	< 0.5
bromochloromethane	< 0.5	< 0.5
tetrahydrofuran	< 5.0	< 5.0
1,1,1-trichloroethane	< 0.5	< 0.5
1,1-dichloropropene	< 0.5	< 0.5
carbon tetrachloride	< 0.5	< 0.5
1,2-dichloroethane	< 0.5	< 0.5
benzene	< 0.5	< 0.5
tert-amyl methyl ether (TAME)	< 1.0	< 1.0
trichloroethene	< 0.5	< 0.5
1,2-dichloropropane	< 0.5	< 0.5
bromodichloromethane	< 0.5	< 0.5
1,4-Dioxane	< 50	< 50
dibromomethane	< 0.5	< 0.5
4-methyl-2-pentanone	< 13	< 13
cis-1,3-dichloropropene	< 0.5	< 0.5
toluene	< 0.5	< 0.5
trans-1,3-dichloropropene	< 1.0	< 1.0
1,1,2-trichloroethane	< 0.5	< 0.5
2-hexanone	< 13	< 13
1,3-dichloropropane	< 0.5	< 0.5
tetrachloroethene	< 0.5	< 0.5
dibromochloromethane	< 0.5	< 0.5
1,2-dibromoethane (EDB)	< 1.0	< 1.0
chlorobenzene	< 0.5	< 0.5
1,1,1,2-tetrachloroethane	< 0.5	< 0.5
ethylbenzene	< 0.5	< 0.5
1,1,2,2-tetrachloroethane	< 0.5	< 0.5
m&p-xylene	< 1.0	< 1.0
o-xylene	< 0.5	< 0.5
styrene	< 0.5	< 0.5
bromoform	< 1.0	< 1.0
isopropylbenzene	< 0.5	< 0.5
1,2,3-trichloropropane	< 0.5	< 0.5
bromobenzene	< 0.5	< 0.5
n-propylbenzene	< 0.5	< 0.5
2-chlorotoluene	< 0.5	< 0.5
1,3,5-trimethylbenzene	< 0.5	< 0.5
trans-1,4-dichloro-2-butene	< 1.0	< 1.0
4-chlorotoluene	< 0.5	< 0.5
tert-butyl-benzene	< 0.5	< 0.5
1,2,4-trimethylbenzene	< 0.5	< 0.5
sec-butyl-benzene	< 0.5	< 0.5
p-isopropyltoluene	< 0.5	< 0.5
1,3-dichlorobenzene	< 0.5	< 0.5
1,4-dichlorobenzene	< 0.5	< 0.5
n-butylbenzene	< 0.5	< 0.5
1,2-dichlorobenzene	< 0.5	< 0.5
1,2-dibromo-3-chloropropane	< 2.5	< 2.5
1,2,4-trichlorobenzene	< 0.5	< 0.5
hexachlorobutadiene	< 0.5	< 0.5
naphthalene	< 1.0	< 1.0
1,2,3-trichlorobenzene	< 0.5	< 0.5

Laboratory Control Sample

Date Analyzed:	8/1/2008			8/1/2008					
Spike Concentration = 20ug/L	% Recovery	Acceptance Limits	Verdict	% Recovery	Acceptance Limits	Verdict	RPD	Limit	Verdict
dichlorodifluoromethane	119	70-130	ok	120	70-130	ok	0.76	<25	ok
chloromethane	102	70-130	ok	102	70-130	ok	0.23	<25	ok
vinyl chloride	96.9	80-120	ok	97.3	80-120	ok	0.36	<25	ok
bromomethane	95.5	70-130	ok	93.4	70-130	ok	2.27	<25	ok
chloroethane	97.8	70-130	ok	98.3	70-130	ok	0.45	<25	ok
trichlorofluoromethane	92.9	70-130	ok	95.0	70-130	ok	2.24	<25	ok
diethyl ether	82.2	70-130	ok	77.1	70-130	ok	6.43	<25	ok
acetone	85.1	70-130	ok	80.3	70-130	ok	5.74	<25	ok
1,1-dichloroethene	85.4	80-120	ok	85.5	80-120	ok	0.15	<25	ok
FREON-113	91.7	70-130	ok	92.8	70-130	ok	1.15	<25	ok
iodomethane	83.7	70-130	ok	83.7	70-130	ok	0.04	<25	ok
carbon disulfide	87.6	70-130	ok	90.5	70-130	ok	3.28	<25	ok
dichloromethane	79.1	70-130	ok	77.5	70-130	ok	2.04	<25	ok
tert-butyl alcohol (TBA)	123	70-130	ok	108	70-130	ok	13.0	<25	ok
acrylonitrile	85.5	70-130	ok	80.6	70-130	ok	5.87	<25	ok
methyl-tert-butyl-ether	83.1	70-130	ok	79.7	70-130	ok	4.19	<25	ok
trans-1,2-dichloroethene	84.3	70-130	ok	85.6	70-130	ok	1.54	<25	ok
1,1-dichloroethane	87.6	70-130	ok	86.6	70-130	ok	1.22	<25	ok
di-isopropyl ether (DIPE)	81.6	70-130	ok	77.9	70-130	ok	4.58	<25	ok
ethyl tert-butyl ether (EtBE)	86.6	70-130	ok	81.9	70-130	ok	5.59	<25	ok
vinyl acetate	81.0	70-130	ok	77.4	70-130	ok	4.46	<25	ok
2-butanone	85.9	70-130	ok	75.7	70-130	ok	12.6	<25	ok
2,2-dichloropropane	73.9	70-130	ok	75.8	70-130	ok	2.47	<25	ok
cis-1,2-dichloroethene	81.3	70-130	ok	80.8	70-130	ok	0.63	<25	ok
chloroform	83.0	80-120	ok	81.3	80-120	ok	2.07	<25	ok
bromochloromethane	88.1	70-130	ok	84.2	70-130	ok	4.56	<25	ok
tetrahydrofuran	106	70-130	ok	85.7	70-130	ok	21.2	<25	ok
1,1,1-trichloroethane	86.1	70-130	ok	86.5	70-130	ok	0.44	<25	ok
1,1-dichloropropene	84.5	70-130	ok	85.4	70-130	ok	1.04	<25	ok
carbon tetrachloride	88.8	70-130	ok	89.3	70-130	ok	0.57	<25	ok
1,2-dichloroethane	86.0	70-130	ok	82.1	70-130	ok	4.64	<25	ok
benzene	83.8	70-130	ok	83.2	70-130	ok	0.80	<25	ok
tert-amyl methyl ether (TAME)	84.4	70-130	ok	78.3	70-130	ok	7.51	<25	ok
trichloroethene	89.5	70-130	ok	88.6	70-130	ok	0.93	<25	ok
1,2-dichloropropane	85.0	80-120	ok	82.2	80-120	ok	3.34	<25	ok
bromodichloromethane	83.0	70-130	ok	80.0	70-130	ok	3.88	<25	ok
1,4-Dioxane	76.9	70-130	ok	72.7	70-130	ok	5.58	<25	ok
dibromomethane	83.5	70-130	ok	80.7	70-130	ok	3.39	<25	ok
4-methyl-2-pentanone	84.3	70-130	ok	76.2	70-130	ok	10.0	<25	ok
cis-1,3-dichloropropene	85.2	70-130	ok	80.4	70-130	ok	5.80	<25	ok
toluene	85.7	80-120	ok	84.8	80-120	ok	1.09	<25	ok
trans-1,3-dichloropropene	86.8	70-130	ok	81.9	70-130	ok	5.75	<25	ok
1,1,2-trichloroethane	89.5	70-130	ok	84.5	70-130	ok	5.80	<25	ok
2-hexanone	95.7	70-130	ok	89.2	70-130	ok	7.07	<25	ok
1,3-dichloropropane	90.9	70-130	ok	86.6	70-130	ok	4.85	<25	ok
tetrachloroethene	102	70-130	ok	104	70-130	ok	1.98	<25	ok
dibromochloromethane	97.8	70-130	ok	92.7	70-130	ok	5.12	<25	ok
1,2-dibromoethane (EDB)	93.0	70-130	ok	88.9	70-130	ok	4.46	<25	ok
chlorobenzene	99.7	70-130	ok	98.6	70-130	ok	1.08	<25	ok
1,1,1,2-tetrachloroethane	94.5	70-130	ok	93.1	70-130	ok	1.54	<25	ok
ethylbenzene	96.4	80-120	ok	95.6	80-120	ok	0.82	<25	ok
1,1,2,2-tetrachloroethane	88.2	70-130	ok	82.4	70-130	ok	4.52	<25	ok
m&p-xylene	92.8	70-130	ok	93.1	70-130	ok	0.34	<25	ok
o-xylene	93.8	70-130	ok	94.1	70-130	ok	0.36	<25	ok
styrene	100	70-130	ok	99.1	70-130	ok	1.24	<25	ok
bromoform	95.8	70-130	ok	92.3	70-130	ok	3.71	<25	ok
isopropylbenzene	113	70-130	ok	114	70-130	ok	0.55	<25	ok
1,2,3-trichloropropane	94.4	70-130	ok	88.4	70-130	ok	6.60	<25	ok
bromobenzene	95.5	70-130	ok	93.6	70-130	ok	2.02	<25	ok
n-propylbenzene	99.5	70-130	ok	101	70-130	ok	0.95	<25	ok
2-chlorotoluene	89.0	70-130	ok	93.9	70-130	ok	5.35	<25	ok
1,3,5-trimethylbenzene	94.7	70-130	ok	95.7	70-130	ok	1.04	<25	ok
trans-1,4-dichloro-2-butene	85.9	70-130	ok	87.7	70-130	ok	1.99	<25	ok
4-chlorotoluene	94.6	70-130	ok	94.1	70-130	ok	0.55	<25	ok
tert-butyl-benzene	116	70-130	ok	116	70-130	ok	0.27	<25	ok
1,2,4-trimethylbenzene	91.9	70-130	ok	91.5	70-130	ok	0.45	<25	ok
sec-butyl-benzene	97.1	70-130	ok	96.1	70-130	ok	1.09	<25	ok
p-isopropyltoluene	95.4	70-130	ok	96.3	70-130	ok	0.89	<25	ok
1,3-dichlorobenzene	95.3	70-130	ok	94.4	70-130	ok	1.01	<25	ok
1,4-dichlorobenzene	91.2	70-130	ok	89.0	70-130	ok	2.49	<25	ok
n-butylbenzene	94.7	70-130	ok	95.5	70-130	ok	0.87	<25	ok
1,2-dichlorobenzene	91.1	70-130	ok	91.2	70-130	ok	0.13	<25	ok
1,2-dibromo-3-chloropropane	80.3	70-130	ok	78.1	70-130	ok	2.82	<25	ok
1,2,4-trichlorobenzene	98.1	70-130	ok	94.7	70-130	ok	3.49	<25	ok
hexachlorobutadiene	99.2	70-130	ok	99.6	70-130	ok	0.38	<25	ok
naphthalene	88.4	70-130	ok	87.0	70-130	ok	1.65	<25	ok
1,2,3-trichlorobenzene	95.7	70-130	ok	91.5	70-130	ok	4.47	<25	ok

SMF criteria allows 5 compounds to be outside acceptance limits

Surrogates:	Recovery (%)	Acceptance Limits	Surrogates:	Recovery (%)	Acceptance Limits	Verdict	Recovery (%)	Acceptance Limits	Verdict	RPD	Limit	Verdict
DIBROMOFLUOROMETHANE	86.4	70-130	DIBROMOFLUOROMETHANE	86.9	70-130	ok	85.2	70-130	ok	2.01	<25	ok
1,2-DICHLOROETHANE-D4	80.3	70-130	1,2-DICHLOROETHANE-D4	85.4	70-130	ok	84.3	70-130	ok	1.38	<25	ok
TOLUENE-D8	88.9	70-130	TOLUENE-D8	87.9	70-130	ok	87.4	70-130	ok	0.59	<25	ok
4-BROMOFLUOROBENZENE	88.2	70-130	4-BROMOFLUOROBENZENE	96.9	70-130	ok	95.1	70-130	ok	1.85	<25	ok
1,2-DICHLOROBENZENE-D4	86.6	70-130	1,2-DICHLOROBENZENE-D4	90.6	70-130	ok	87.1	70-130	ok	3.91	<25	ok

Instrument: HP GC/MS "S"

GZA GeoEnvironmental, Inc.
106 South Street
Hopkinton, MA 01748
MA092

EPA Method 8270/625 Aqueous Method Blank (MB) and Laboratory Control Sample (LCS) Data

Method Blank

Date Extracted:	07/30/08
Date Analyzed:	07/31/08
File Name:	L8281

Semi-Volatile Organics	Result	Reporting Limit (ug/L)
n-nitrosodimethylamine	ND	10
pyridine	ND	100
phenol	ND	10
bis(2-chloroethyl)ether	ND	10
2-chlorophenol	ND	10
1,3-dichlorobenzene	ND	10
1,4-dichlorobenzene	ND	10
benzyl alcohol	ND	20
1,2-dichlorobenzene	ND	10
2-methylphenol	ND	10
bis(2-chloroisopropyl)ether	ND	10
3&4-methylphenol	ND	10
n-nitrosodi-n-propylamine	ND	10
acetophenone	ND	10
hexachloroethane	ND	10
nitrobenzene	ND	10
isophrone	ND	10
2-nitrophenol	ND	10
2,4-dimethylphenol	ND	10
benzoic acid	ND	10
bis(2-chloroethoxy)methane	ND	10
2,4-dichlorophenol	ND	10
1,2,4-trichlorobenzene	ND	10
naphthalene	ND	2.0
4-chloroaniline	ND	10
hexachlorobutadiene	ND	10
4-chloro-3-methylphenol	ND	20
2-methylnaphthalene	ND	2.0
aniline	ND	10
hexachlorocyclopentadiene	ND	50
2,4,6-trichlorophenol	ND	10
2,4,5-trichlorophenol	ND	10
2-chloronaphthalene	ND	10
2-nitroaniline	ND	50
dimethylphthalate	ND	10
acenaphthylene	ND	2.0
2,6-dinitrotoluene	ND	10
3-nitroaniline	ND	50
acenaphthene	ND	2.0
2,4-dinitrophenol	ND	100
dibenzofuran	ND	10
4-nitrophenol	ND	50
2,4-dinitrotoluene	ND	10
diethylphthalate	ND	10
fluorene	ND	2.0
4-chlorophenyl phenyl ether	ND	10
4-nitroaniline	ND	20
4,6-dinitro-2-methylphenol	ND	50
n-nitrosodiphenylamine	ND	10
azobenzene	ND	10
4-bromophenyl phenyl ether	ND	10
hexachlorobenzene	ND	10
pentachlorophenol	ND	50
phenanthrene	ND	2.0
anthracene	ND	2.0
carbazole	ND	10
di-n-butylphthalate	ND	15
fluoranthene	ND	2.0
pyrene	ND	2.0
butylbenzylphthalate	ND	10
benz [a] anthracene	ND	2.0
3,3'-dichlorobenzidine	ND	20
chrysene	ND	2.0
bis(2-ethylhexyl)phthalate	ND	10
di-n-octylphthalate	ND	10
benzo [b] fluoranthene	ND	2.0
benzo [k] fluoranthene	ND	2.0
benzo [a] pyrene	ND	2.0
indeno [1,2,3-cd] pyrene	ND	2.0
dibenz [a,h] anthracene	ND	2.0
benzo [ghi] perylene	ND	2.0

Surrogates:	Recovery (%)	Acceptance Limits
2-FLUOROPHENOL	22.8	15-110
2-CHLOROPHENOL-D4	15.4	15-110
NITROBENZENE-D5	41.4	30-130
2-FLUOROBIPHENYL	43.8	30-130
2,4,6-TRIBROMOPHENOL	54.7	15-100
p-TERPHENYL-D14	52.6	30-130

GZA GeoEnvironmental, Inc.
106 South Street
Hopkinton, MA 01748
MA092

EPA Method 8270/625 Aqueous Method Blank (MB) and Laboratory Control Sample (LCS) Data

Laboratory Control Sample

Date Extracted: 07/30/08
Date Analyzed: 07/31/08
File Name: L8283

Laboratory Control Sample Duplicate

Date Extracted: 07/30/08
Date Analyzed: 07/31/08
File Name: L8282

Spike Concentration = 20ug/L	% Recovery	Acceptance Limits	Verdict	% Recovery	Acceptance Limits	Verdict	Relative % Diff	Limits	Verdict
n-nitrosodimethylamine	30.7	40-140	out	29.8	40-140	out	3.1	<20	ok
pyridine	7.88	40-140	out	10.0	40-140	out	24	<20	out
phenol	16.2	30-130	out	16.6	30-130	out	8.8	<20	ok
bis(2-chloroethyl)ether	45.2	40-140	ok	40.5	40-140	ok	11	<20	ok
2-chlorophenol	47.3	30-130	ok	41.6	30-130	ok	13	<20	ok
1,3-dichlorobenzene	34.8	40-140	out	28.3	40-140	out	21	<20	out
1,4-dichlorobenzene	36.5	40-140	out	29.1	40-140	out	23	<20	out
benzyl alchohol	41.3	40-140	ok	41.6	40-140	ok	0.92	<20	ok
1,2-dichlorobenzene	41.2	40-140	ok	31.4	40-140	out	27	<20	out
2-methylphenol	42.5	30-130	ok	40.7	30-130	ok	4.4	<20	ok
bis(2-chloroisopropyl)ether	41.7	40-140	ok	45.7	40-140	ok	9.2	<20	ok
3&4-methylphenol	79.9	30-140	ok	74.5	30-130	ok	7.0	<20	ok
n-nitrosodi-n-propylamine	50.3	40-140	ok	41.6	40-140	ok	19	<20	ok
acetophenone	52.0	40-140	ok	48.1	40-140	ok	7.8	<20	ok
hexachloroethane	35.2	40-140	out	52.3	40-140	ok	39	<20	out
nitrobenzene	46.6	40-140	ok	40.2	40-140	ok	15	<20	ok
isophrone	53.5	30-130	ok	45.1	30-130	ok	17	<20	ok
2-nitrophenol	53.0	30-130	ok	42.2	30-130	ok	23	<20	out
2,4-dimethylphenol	49.9	30-130	ok	43.5	30-130	ok	14	<20	ok
benzoic acid	34.8	40-140	out	29.2	40-140	out	18	<20	ok
bis(2-chloroethoxy)methane	53.0	30-130	ok	44.2	30-130	ok	18	<20	ok
2,4-dichlorophenol	53.9	40-140	ok	45.5	40-140	ok	17	<20	ok
1,2,4-trichlorobenzene	43.1	40-140	ok	33.1	40-140	out	26	<20	out
naphthalene	47.3	40-140	ok	40.2	40-140	ok	16	<20	ok
4-chloroaniline	40.5	40-140	ok	42.4	40-140	ok	4.7	<20	ok
hexachlorobutadiene	41.8	30-130	ok	31.8	30-130	ok	27	<20	out
4-chloro-3-methylphenol	58.6	40-140	ok	51.9	40-140	ok	8.7	<20	ok
2-methylnaphthalene	48.5	40-140	ok	58.4	40-140	ok	19	<20	ok
aniline	16.7	40-140	out	19.2	40-140	out	14	<20	ok
hexachlorocyclopentadiene	31.7	30-130	ok	21.0	30-130	out	41	<20	out
2,4,6-trichlorophenol	54.7	30-130	ok	47.5	30-130	ok	14	<20	ok
2,4,5-trichlorophenol	58.2	40-140	ok	49.4	40-140	ok	16	<20	ok
2-chloronaphthalene	51.1	40-140	ok	40.5	40-140	ok	23	<20	out
2-nitroaniline	53.0	40-140	ok	47.4	40-140	ok	11	<20	ok
dimethylphthalate	55.2	40-140	ok	49.2	40-140	ok	11	<20	ok
acenaphthylene	53.9	40-140	ok	43.0	40-140	ok	23	<20	out
2,6-dinitrotoluene	52.9	40-140	ok	44.8	40-140	ok	17	<20	ok
3-nitroaniline	52.6	40-140	ok	55.4	40-140	ok	5.1	<20	ok
acenaphthene	52.4	30-130	ok	41.7	30-130	ok	23	<20	out
2,4-dinitrophenol	61.0	40-140	ok	54.1	40-140	ok	12	<20	ok
dibenzofuran	54.5	30-130	ok	44.6	30-130	ok	20	<20	~~out~~ ok
4-nitrophenol	18.6	40-140	out	16.8	40-140	out	10	<20	ok
2,4-dinitrotoluene	53.6	40-140	ok	45.3	40-140	ok	17	<20	ok
diethylphthalate	56.7	40-140	ok	49.2	40-140	ok	14	<20	ok
fluorene	55.8	40-140	ok	46.1	40-140	ok	19	<20	ok
4-chlorophenyl phenyl ether	53.1	40-140	ok	42.8	40-140	ok	22	<20	out
4-nitroaniline	50.9	30-130	ok	50.6	30-130	ok	0.59	<20	ok
4,6-dinitro-2-methylphenol	53.2	40-140	ok	48.2	40-140	ok	9.7	<20	ok
n-nitrosodiphenylamine	45.3	40-140	ok	40.5	40-140	ok	11	<20	ok
azobenzene	48.7	40-140	ok	41.7	40-140	ok	15	<20	ok
4-bromophenyl phenyl ether	53.0	40-140	ok	43.3	40-140	ok	20	<20	~~out~~ ok
hexachlorobenzene	52.5	40-140	ok	43.1	40-140	ok	20	<20	ok
pentachlorophenol	52.5	40-140	ok	44.6	40-140	ok	16	<20	ok
phenanthrene	53.9	40-140	ok	45.6	40-140	ok	17	<20	ok
anthracene	56.9	40-140	ok	48.2	40-140	ok	17	<20	ok
carbazole	53.5	40-140	ok	45.3	40-140	ok	17	<20	ok
di-n-butylphthalate	57.0	40-140	ok	48.3	40-140	ok	17	<20	ok
fluoranthene	55.5	40-140	ok	47.2	40-140	ok	16	<20	ok
pyrene	52.8	40-140	ok	44.6	40-140	ok	17	<20	ok
butylbenzylphthalate	55.0	40-140	ok	46.5	40-140	ok	17	<20	ok
benz [a] anthracene	51.0	40-140	ok	44.7	40-140	ok	13	<20	ok
3,3'-dichlorobenzidine	39.0	40-140	out	35.8	40-140	out	8.4	<20	ok
chrysene	46.3	40-140	ok	39.1	40-140	out	17	<20	ok
bis(2-ethylhexyl)phthalate	54.4	40-140	ok	45.2	40-140	ok	18	<20	ok
di-n-octylphthalate	53.0	40-140	ok	43.5	40-140	ok	20	<20	ok
benzo [b] fluoranthene	51.0	40-140	ok	46.9	40-140	ok	9.6	<20	ok
benzo [k] fluoranthene	45.5	40-140	ok	41.6	40-140	ok	8.9	<20	ok
benzo [a] pyrene	44.8	40-140	ok	40.5	40-140	ok	10	<20	ok
indeno [1,2,3-cd] pyrene	58.7	40-140	ok	47.8	40-140	ok	21	<20	out
dibenz [a,h] anthracene	56.9	40-140	ok	46.6	40-141	ok	20	<20	ok
benzo [ghi] perylene	57.5	40-140	ok	47.0	40-142	ok	20	<20	~~out~~ ok

CAM criteria allows 15% of analytes to exceed criteria.

Surrogates:	Recovery (%)	Acceptance Limits	Verdict	Recovery (%)	Acceptance Limits	Verdict	Relative % Diff.	Limits	Verdict
2-FLUOROPHENOL	26.6	15-110	ok	23.4	10-100	ok	13	<20	ok
2-CHLOROPHENOL-D4	49.0	15-110	ok	42.2	15-110	ok	15	<20	ok
NITROBENZENE-D5	46.0	30-130	ok	37.8	10-130	ok	19	<20	ok
2-FLUOROBIPHENYL	48.2	30-130	ok	39.9	10-105	ok	19	<20	ok
2,4,6-TRIBROMOPHENOL	58.0	15-110	ok	49.49	14-134	ok	16	<20	ok
p-TERPHENYL-D14	58.2	30-130	ok	51.58	11-102	ok	12	<20	ok

Report Generated: 8/1/08 8:07 AM
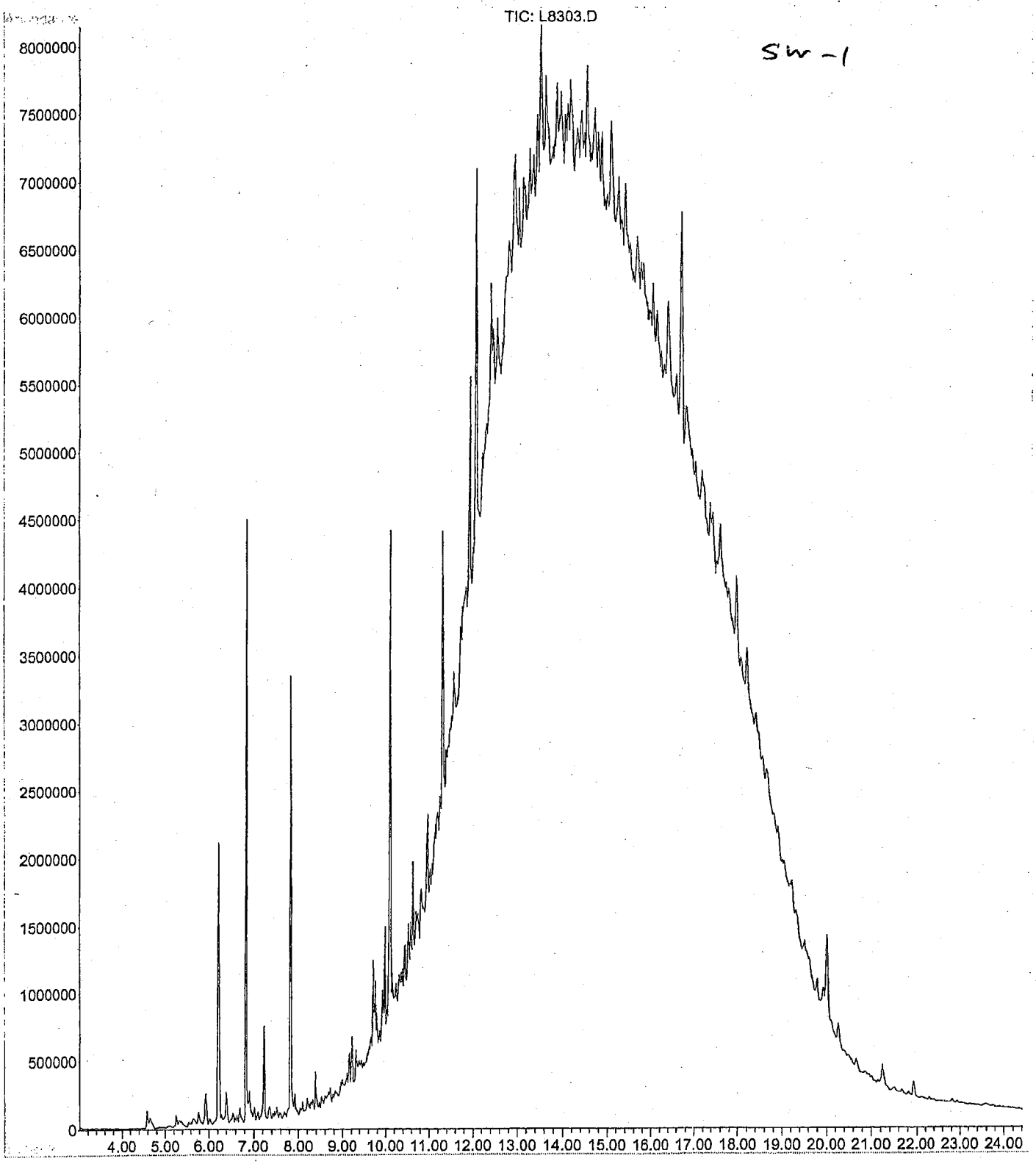
File : C:\HPCHEM\DATA\L8303.D
Operator : rjd
Acquired : 1 Aug 2008 2:36 pm using AcqMethod IABN161
Instrument : INGRID
Sample Name: 0807-00137-001rr df=5/500
Misc Info : 8270 dab e:7/30/08 is:a055436
Vial Number: 4