Response Environmental, Inc.

MAG910282

February 7, 2006

US EPA
RGP-NOC Processing
Municipal Assistance Unit [CMU]
1 Congress Street, Suite 1100
Boston, MA 02114-2023

RE: NOI for RGP
#2 Fuel Oil Release MA-DEP RTN 3-25396
Nash Street
Watertown, MA

Attached please find a completed Notice of Intent [NOI] form and applicable attachments for coverage of a remedial discharge under the RGP. The NOI is for a groundwater treatment system in response to the need to dewater and treat localized groundwater for virgin residual #2 fuel oil. The oil is the result of a November 13, 2005 release of virgin #2 fuel oil from a ruptured residential fuel oil tank which migrated to groundwater below the residential basement floor. This groundwater extraction is necessary to treat residual dissolved constituents in groundwater. The work is being conducted under MADEP Immediate Response Action protocol. It is expected that discharge would commence February 20, 2006 based on RGP approval.

If you have any questions please contact me at (508) 795-0110 ext. 202.

Sincerely,

Glenn S. Goral, LSP

Cc: Mr. Steven Ross
MA DEP NERO BWSC
205B Lowell Street
Wilmington, MA 01887
Ref RTN: 3-25396

REI Project File

Mr. Robert Manzelli
Munhall Fuel Oil Company
40 Summer Street
Watertown, MA 02472

FEB 16 2006

B. Suggested Form for Notice of Intent (NOI) for the Remediation General Permit

1. General site information. Please provide the following information about the site:

a) Name of **facility/site**: MUNHALL FUEL OIL CO.		**Facility/site** address:		
Location of facility/site: longitude:_____ latitude:_____ 42° 22.364' 71° 12.220'	Facility SIC code(s): N/A PRIVATE Residence	Street: 8 NASH STREET		
b) Name of **facility/site owner:** MUNHALL FUEL OIL CO.		Town: WATERTOWN		
Email address of owner:		State: MA	Zip: 02472	County: MIDDLESEX
Telephone no.of facility/site **owner**: 617-924-4000				
Fax no. of facility/site **owner**:		**Owner** is (check one): 1. Federal____ 2. State/Tribal_____ 3. Private X 4. other, if so, describe:		
Address of **owner** (if different from site):				
Street: 40 SUMMER STREET				
Town: WATERTOWN	State: MA	Zip: 02472	County: MIDDLESEX	
c) Legal name of **operator**: RESPONSE ENVIRONMENTAL	**Operator** telephone no: 508-795-0110			
	Operator fax no.: 508-795-0910	**Operator** email: GGORAL@SPILLMANAGER.COM		
Operator contact name and title: GLENN GORAL				

Address of **operator** (if different from owner):	Street: 563 MAIN STREET		
Town: WORCESTER	State: MA	Zip: 01608	County: WORCESTER

d) Check "yes" or "no" for the following:
1. Has a prior NPDES permit exclusion been granted for the discharge? Yes___ No X, if "yes," number:
2. Has a prior NPDES application (Form 1 & 2C) ever been filed for the discharge? Yes___ No X, if "yes," date and tracking #:
3. Is the discharge a "new discharge"as defined by 40 CFR 122.2? Yes___ No___
4. For sites in Massachusetts, is the discharge covered under the MA Contingency Plan (MCP) and exempt from state permitting? Yes X No__

e) Is site/facility subject to any State permitting or other action which is causing the generation of discharge? Yes X No___
If "yes," please list:
1. site identification # assigned by the state of NH or MA: 3-25396
2. permit or license # assigned:
3. state agency contact information: name, location, and telephone number:
STEVE ROSS NERO BWSC WILMINGTON, MA 978-694-3200

f) Is the site/facility covered by any other EPA permit, including:
1. multi-sector storm water general permit? Y___ N X, if Y, number:
2. phase I or II construction storm water general permit? Y___ N X, if Y, number:
3. individual NPDES permit? Y___ N X, if Y, number:
4. any other water quality related permit? Y___ N X, if Y, number:

2. Discharge information. Please provide information about the discharge, (attaching additional sheets as needed) including:

a) Describe the discharge activities for which the owner/applicant is seeking coverage:
GROUNDWATER TREATMENT FOR REMEDIATION OF VIRGIN #2 FUEL OIL RELEASE TO RESIDENTIAL BASEMENT. TEMPORARY TREATMENT EXPECTED FROM FEB THROUGH JULY.

b) Provide the following information about each discharge:	1) Number of discharge points: 1	2) What is the **maximum** and **average flow rate** of discharge (in cubic feet per second, ft^3/s)? Max. flow 0.05 Average flow 0.02 Is maximum flow a **design value**? Y X N___ For average flow, include the units and appropriate notation if this value is a design value or estimate if not available. ESTIMATE OF 1-5 GPM AVERAGE SYSTEM FLOW

3) Latitude and longitude of each discharge within 100 feet: pt.1: ~~long.~~ 42° 22.367' lat. 71° 12.244'; pt.2: ~~long.~~ ~~lat.~~; pt.3: ~~long.~~ ~~lat.~~; pt.4: ~~long.~~ lat._____; pt.5: ~~long.~~ ~~lat.~~; pt.6: ~~long.~~ lat._____; pt.7: ~~long.~~ ~~lat.~~; pt.8: ~~long.~~ ~~lat.~~; etc.

4) If hydrostatic testing, total volume of the discharge (gals): (NA)	5) Is the discharge intermittent NO or seasonal NO ? Is discharge ongoing Yes ____ No X ?
c) Expected dates of discharge (mm/dd/yy): start 02/20/06 end 08/31/06	
d) Please attach a line drawing or flow schematic showing water flow through the facility including: 1. sources of intake water, 2. contributing flow from the operation, 3. treatment units, and 4. discharge points and receiving waters(s). ATTACHED	

3. Contaminant information. In order to complete this section, the applicant will need to take a minimum of one sample of the untreated water and have it analyzed for **all** of the parameters listed in Appendix III. Historical data, (i.e., data taken no more than 2 years prior to the effective date of the permit) may be used if obtained pursuant to: i. Massachusetts' regulations 310 CMR 40.0000, the Massachusetts Contingency Plan ("Chapter 21E"); ii. New Hampshire's Title 50 RSA 485-A: Water Pollution and Waste Disposal or Title 50 RSA 485-C: Groundwater Protection Act; or iii. an EPA permit exclusion letter issued pursuant to 40 CFR 122.3, provided the data was analyzed with test methods that meet the requirements of this permit. Otherwise, a new sample shall be taken and analyzed.

a) Based on the analysis of the sample(s) of the untreated influent, the applicant must check the box of the sub-categories that the potential discharge falls within.

Gasoline Only	VOC Only	Primarily Metals	Urban Fill Sites	Contaminated Sumps	Mixed Contaminants	Aquifer Testing
Fuel Oils (and Other Oils) only	VOC with Other Contaminants	Petroleum with Other Contaminants	Listed Contaminated Sites	Contaminated Dredge Condensates	Hydrostatic Testing of Pipelines/Tanks	Well Development or Rehabilitation

b) Based on the analysis of the untreated influent, the applicant must indicate whether each listed chemical is **believed present** or **believed absent** in the potential discharge. Attach additional sheets as needed.

PARAMETER	Believe Absent	Believe Present	# of Samples (1 min-imum)	Type of Sample (e.g., grab)	Analytical Method Used (method #)	Minimum Level (ML) of Test Method	Maximum daily value		Avg. daily value	
							concentration (ug/l)	mass (kg)	concentration (ug/l)	mass (kg)
1. Total Suspended Solids		X	1	GRAB	SM2540D	10	320	MG/L		
2. Total Residual Chlorine	X		1		FIELD TEST STRIP	1	BRL	MG/L		
3. Total Petroleum Hydrocarbons		X	1		1664	0.2	0.2	MG/L		
4. Cyanide	X		1		SW846	0.01	BRL	MG/L		
5. Benzene	X		1		8260B	1.0	BRL	UG/L		
6. Toluene	X		1			1.0	BRL			
7. Ethylbenzene	X		1			1.0	BRL			
8. (m,p,o) Xylenes		X	1			2.0	1.4			
9. Total BTEX[4]		X	1			2.0	1.4			

[4] BTEX = Sum of Benzene, Toluene, Ethylbenzene, total Xylenes.

PARAMETER	Believe Absent	Believe Present	# of Samples (1 min-imum)	Type of Sample (e.g., grab)	Analytical Method Used (method #)	Minimum Level (ML) of Test Method	Maximum daily value		Avg. daily value	
							concentration (ug/l)	mass (kg)	concentration (ug/l)	mass (kg)
10. Ethylene Dibromide (1,2- Dibromo-methane)	X		1	GRAB	8260B	1.0	BRL	UG/L		
11. Methyl-tert-Butyl Ether (MtBE)	X					1.0	BRL			
12. tert-Butyl Alcohol (TBA)	X					10.0	BRL			
13. tert-Amyl Methyl Ether (TAME)	X					1.0	BRL			
14. Naphthalene		X				1.0	13.5			
15. Carbon Tetra-chloride	X					1.0	BRL			
16. 1,4 Dichlorobenzene	X					1.0	BRL			
17. 1,2 Dichlorobenzene	X					1.0	BRL			
18. 1,3 Dichlorobenzene	X					1.0	BRL			
19. 1,1 Dichloroethane	X					1.0	BRL			
20. 1,2 Dichloroethane	X					1.0	BRL			
21. 1,1 Dichloroethylene	X					1.0	BRL			
22. cis-1,2 Dichloro-ethylene	X					1.0	BRL			
23. Dichloromethane (Methylene Chloride)	X					10.0	BRL			
24. Tetrachloroethylene	X					1.0	BRL			

PARAMETER	Believe Absent	Believe Present	# of Samples (1 min-imum)	Type of Sample (e.g., grab)	Analytical Method Used (method #)	Minimum Level (ML) of Test Method	Maximum daily value		Avg. daily Value	
							concentration (ug/l)	mass (kg)	concentration (ug/l)	mass (kg)
25. 1,1,1 Trichloroethane	X		1	GRAB	8260B	1.0	BRL	UG/L		
26. 1,1,2 Trichloroethane	X		1			1.0	BRL			
27. Trichloroethylene	X		1			1.0	BRL			
28. Vinyl Chloride	X		1			1.0	BRL			
29. Acetone	X		1			1.0	BRL			
30. 1,4 Dioxane	X		1			1.0	BRL			
31. Total Phenols	X		1		625	5.0	BRL	UG/L		
32. Pentachlorophenol	X		1			5.0	BRL			
33. Total Phthalates [5] (Phthalate esthers)	X		1			5.0	BRL			
34. Bis (2-Ethylhexyl) Phthalate [Di-(ethylhexyl) Phthalate]	X		1			5.0	BRL			
35. Total Group I Polycyclic Aromatic Hydrocarbons (PAH)	X		1			5.0	BRL			
a. Benzo(a) Anthracene	X		1			5.0	BRL			
b. Benzo(a) Pyrene	X		1			5.0	BRL			
c. Benzo(b)Fluoranthene	X		1			5.0	BRL			
d. Benzo(k) Fluoranthene	X		1			5.0	BRL			
e. Chrysene	X		1			5.0	BRL			

[5] The sum of individual phthalate compounds.

PARAMETER	Believe Absent	Believe Present	# of Samples (1 min-imum)	Type of Sample (e.g., grab)	Analytical Method Used (method #)	Minimum Level (ML) of Test Method	Maximum daily value		Average daily value	
							concentration (ug/l)	mass (kg)	concentration (ug/l)	mass (kg)
f. Dibenzo(a,h) anthracene	X		1	GRAB	625	5.0	BRL	UG/L		
g. Indeno(1,2,3-cd) Pyrene	X		1	↓	↓	5.0	BRL	↓		
36. Total Group II Polycyclic Aromatic Hydrocarbons (PAH)	X		1	↓	↓	5.0	BRL	↓		
h. Acenaphthene	X		1	↓	↓	5.0	BRL	↓		
i. Acenaphthylene	X		1	↓	↓	5.0	BRL	↓		
j. Anthracene	X		1	↓	↓	5.0	BRL	↓		
k. Benzo(ghi) Perylene	X		1	↓	↓	5.0	BRL	↓		
l. Fluoranthene	X		1	↓	↓	5.0	BRL	↓		
m. Fluorene	X		1	↓	↓	5.0	BRL	↓		
n. Naphthalene-	X		1	↓	↓	5.0	BRL	↓		
o. Phenanthrene	X		1	↓	↓	5.0	BRL	↓		
p. Pyrene	X		1	↓	↓	5.0	BRL	↓		
37. Total Polychlorinated Biphenyls (PCBs)	X		1	GRAB	608	0.211	BRL	UG/L		
38. Antimony	X		1	↓	200.7	0.012	BRL	MG/L		
39. Arsenic	X		1	↓	↓	0.0080	BRL	↓		
40. Cadmium	X		1	↓	↓	0.0025	BRL	↓		
41. Chromium III		X		↓	↓	0.0050	0.0052	↓		
42. Chromium VI	X		1	↓	SM3500	0.005	BRL	↓		

PARAMETER	Believe Absent	Believe Present	# of Samples (1 min-imum)	Type of Sample (e.g., grab)	Analytical Method Used (method #)	Minimum Level (ML) of Test Method	Maximum daily value		Avg. daily value	
							concentration (ug/l)	mass (kg)	concentration (ug/l)	mass (kg)
43. Copper	X		1	GRAB	200.7	0.0050	BRL	MG/L		
44. Lead		X	1	↓	↓	0,0075	0,0120	↓		
45. Mercury	X		1	↓	↓	0,0002	BRL	↓		
46. Nickel	X		1	↓	↓	0,0050	BRL	↓		
47. Selenium	X		1	↓	↓	0,015	BRL	↓		
48. Silver	X		1	↓	↓	0,01	BRL	↓		
49. Zinc	X		1	↓	↓	0,0168	BRL	↓		
50. Iron		X	1	↓	↓	0,005	3,41	↓		
Other (describe):										

c) For discharges where **metals** are believed present, please fill out the following:

Step 1: Do any of the metals in the influent have a **reasonable potential** to exceed the effluent limits in Appendix III (i.e., the limits set at zero to five dilutions)? Y____ N__X__	If yes, which metals?
Step 2: For any metals which have **reasonable potential** to exceed the **Appendix III** limits, calculate the **dilution factor (DF)** using the formula in Part I.A.3.c) (step 2) of the NOI instructions or as determined by the State prior to the submission of this NOI. What is the dilution factor for applicable metals? Metals:_____ DF: _____	Look up the limit calculated at the corresponding dilution factor in **Appendix IV.** Do any of the metals in the **influent** have the potential to exceed the corresponding **effluent** limits in Appendix IV (i.e., is the influent concentration above the limit set at the calculated dilution factor)? Y____ N__X__ If "Yes," list which metals:

4. Treatment system information. Please describe the treatment system using separate sheets as necessary, including:

a) A description of the treatment system, including a schematic of the proposed or existing treatment system:
Flow is processed from a Recovery well via Float Activated Submersible Pump. Float level is above top of water to prevent any Residual Sheen (if any). Flow processed through (2) 200# contactors as a precaution for sheen. Process flow through (2) Primary 200# LGAC and (2) Secondary LGAC, Final Flow through Flow meter & Discharge to Storm Drain.

b) Identify each applicable treatment unit (check all that apply):	Frac. tank	Air stripper	Oil/water separator	Equalization tanks	Bag filter	GAC filter
						X
	Chlorination	Dechlorination	Other (please describe): Bentonite Anthracite Contactor For Precaution Against Sheen/ Product Entering GAC			

c) Proposed **average** and **maximum flow rates** (gallons per minute) for the discharge and the **design flow rate**(s) (gallons per minute) of the treatment system:
Average flow rate of discharge 1-5 Maximum flow rate of treatment system 20 Design flow rate of treatment system 10

d) A description of chemical additives being used or planned to be used (attach MSDS sheets):
None

5. Receiving surface water(s). Please provide information about the receiving water(s), using separate sheets as necessary:

a) Identify the discharge pathway:	Direct	Within facility	Storm drain	River/brook	Wetlands	Other (describe):
			X			

b) Provide a narrative description of the discharge pathway, including the name(s) of the receiving waters:
Discharge via subsurface pipe to storm drain on North corner at intersection of Nash & Evans Streets. Per Watertown DPW storm drain discharges to Charles River Approximately at Bridge Street.

c) Attach a detailed map(s) indicating the site location and location of the outfall to the receiving water:
1. For multiple discharges, number the discharges sequentially.
2. For indirect dischargers, indicate the location of the discharge to the indirect conveyance and the discharge to surface water
The map should also include the location and distance to the nearest sanitary sewer as well as the locus of nearby sensitive receptors (based on USGS topographical mapping), such as surface waters, drinking water supplies, and wetland areas.

d) Provide the state water quality classification of the receiving water B,

e) Provide the reported or calculated seven day-ten year low flow (7Q10) of the receiving water_____cfs
Please attach any calculation sheets used to support stream flow and dilution calculations.

f) Is the receiving water a listed 303(d) water quality impaired or limited water? Yes X No____ If yes, for which pollutant(s)? BACTERIA

Is there a TMDL? Yes X No____ If yes, for which pollutant(s)? BACTERIA

6. Results of Consultation with Federal Services: Please provide the following information according to requirements of Part I.B.4 and Appendices II and VII.

a) Are any listed threatened or endangered species, or designated critical habitat, in proximity to the discharge? Yes____ No X
Has any consultation with the federal services been completed ? No X or is consultation underway? Yes No X
What were the results of the consultation with the U.S. Fish and Wildlife Service and/or National Marine Fisheries Service (~~check~~ one):
a "no jeopardy" opinion? _____or written concurrence____ on a finding that the discharges are not likely to adversely affect any endangered species or critical habitat?

b) Are any historic properties listed or eligible for listing on the National Register of Historic Places located on the facility or site or in proximity to the discharge?
Yes_____ No X Have any state or tribal historic preservation officer been consulted in this determination (Massachusetts only)? Yes_____ No X

7. Supplemental information. :

Please provide any supplemental information. Attach any analytical data used to support the application. Attach any certification(s) required by the general permit.

ANALYTICAL ATTACHED

8. Signature Requirements: The Notice of Intent must be signed by the operator in accordance with the signatory requirements of 40 CFR Section 122.22, including the following certification:

I certify under penalty of law that this document and all attachments were prepared under my direction or supervision in accordance with a system designed to assure that qualified personnel properly gather and evaluate the information submitted. Based on my inquiry of the person or persons who manage the system, or those persons directly responsible for gathering the information, I certify that the information submitted is, to the best of my knowledge and belief, true, accurate, and complete. I certify that I am aware that there are significant penalties for submitting false information, including the possibility of fine and imprisonment for knowing violations.

Facility/Site Name:	MONHAIL FUEL OIL CO.
Operator signature:	[signature]
Title:	President, LSP
Date:	2/7/06

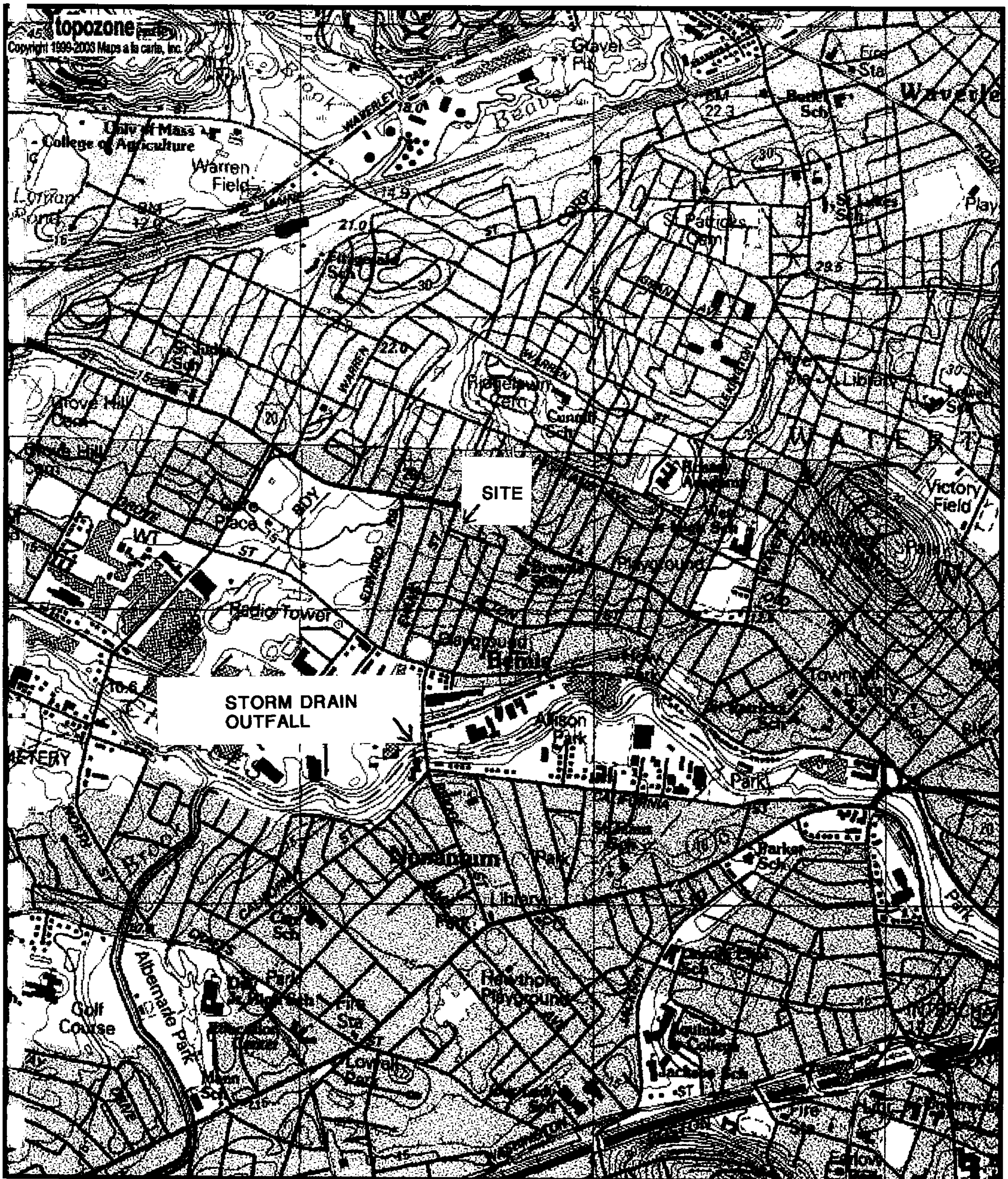

0 0.3 0.6 0.9 1.2 1.5 km

0 0.2 0.4 0.6 0.8 1 mi

Map center is UTM 19 318751E 4693272N (WGS84/NAD83)

Boston South quadrangle

Projection is UTM Zone 19 NAD83 Datum

M=-15.572
G=-1.484

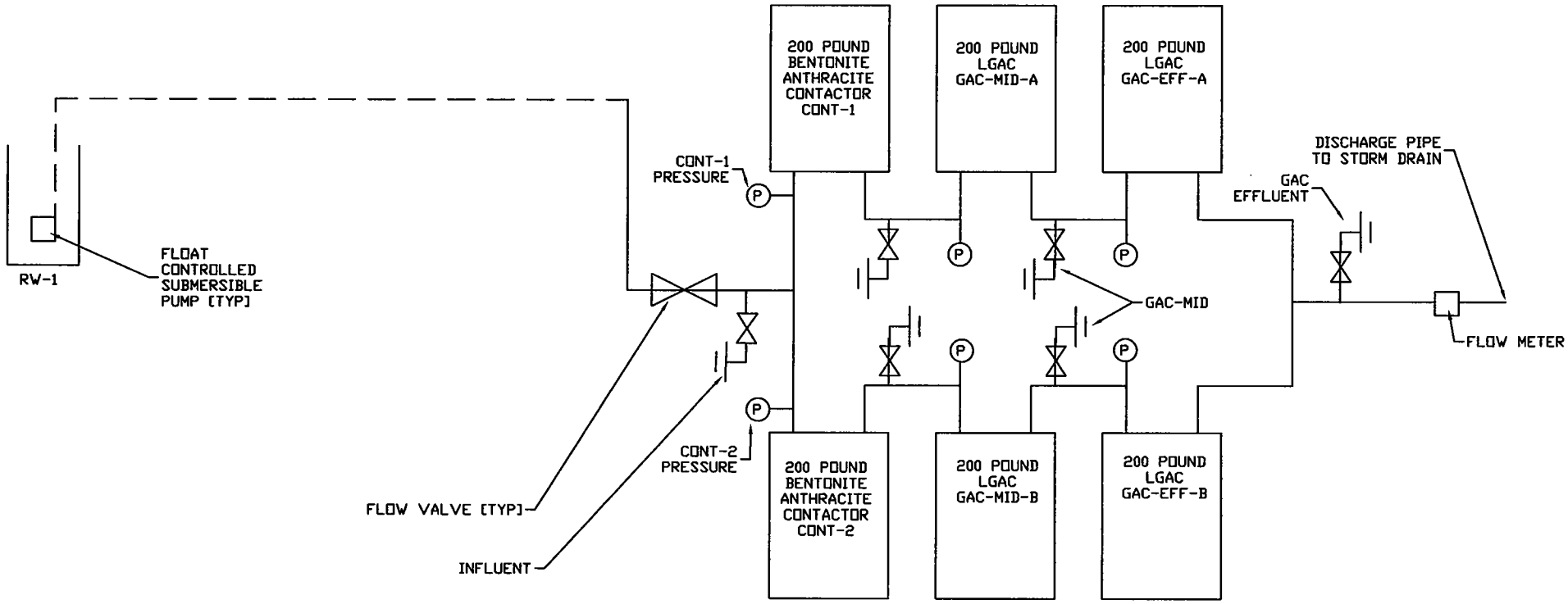

RESPONSE ENVIRONMENTAL, INC.

MUNHALL FUEL OIL CO.
8 NASH STREET
WATERTOWN, MA
RTN 3-25396

DATE: FEBRUARY 2006

SCALE: NTS

PROCESS DIAGRAM LAYOUT

Report Date:
22-Dec-05 15:34

SPECTRUM ANALYTICAL, INC.
Featuring
HANIBAL TECHNOLOGY

☑ Final Report
☐ Re-Issued Report
☐ Revised Report

Laboratory Report

Response Environmental, Inc.
563 Main Street; Suite 211
Worcester, MA 01608
Attn: Glenn Goral

Project: Munhall Fuel-Watertown, MA
Project #: 2003 2871

Laboratory ID	Client Sample ID	Matrix	Date Sampled	Date Received
SA38246-01	GW-8 Nash	Ground Water	07-Dec-05 12:00	09-Dec-05 08:48

I attest that the information contained within the report has been reviewed for accuracy and checked against the quality control requirements for each method. All applicable NELAC requirements have been met
Please note that this report contains 23 pages of analytical data plus Chain of Custody document(s).
This report may not be reproduced, except in full, without written approval from Spectrum Analytical, Inc

Massachusetts Certification # M-MA138/MA1110
Connecticut # PH-0777
Florida # E87600/E87936
Maine # MA138
New Hampshire # 2538/2972
New York # 11393/11840
Rhode Island # 98
USDA # S-51435
Vermont # VT-11393

ACCREDITED IN ACCORDANCE WITH nelac

Authorized by:

Hanibal C. Tayeh, Ph.D.
President/Laboratory Director

Spectrum Analytical, Inc. is a NELAC accredited laboratory organization and meets NELAC testing standards. Use of the NELAC logo however does not insure that Spectrum is currently accredited for the specific method indicated. Please refer to our "Quality" webpage at www.spectrum-analytical.com for a full listing of our current certifications.

Sample Identification	Client Project #	Matrix	Collection Date/Time	Received
GW-8 Nash SA38246-01	2003 2871	Ground Water	07-Dec-05 12:00	09-Dec-05

CAS No.	Analyte(s)	Result	Flag	Units	*RDL	Dilution	Method Ref.	Prepared	Analyzed	Batch	Analyst
Volatile Organic Compounds											
Volatile Organic Compounds											
Prepared by method SW846 5030 Water MS											
67-64-1	Acetone	BRL		µg/l	10.0	1	SW 846 8260B	21-Dec-05	21-Dec-05	5121221	KS
107-13-1	Acrylonitrile	BRL		µg/l	1.0	1	"	"	"	"	"
71-43-2	Benzene	BRL		µg/l	1.0	1	"	"	"	"	"
108-86-1	Bromobenzene	BRL		µg/l	1.0	1	"	"	"	"	"
74-97-5	Bromochloromethane	BRL		µg/l	1.0	1	"	"	"	"	"
75-27-4	Bromodichloromethane	BRL		µg/l	1.0	1	"	"	"	"	"
75-25-2	Bromoform	BRL		µg/l	1.0	1	"	"	"	"	"
74-83-9	Bromomethane	BRL		µg/l	2.0	1	"	"	"	"	"
78-93-3	2-Butanone (MEK)	BRL		µg/l	10.0	1	"	"	"	"	"
104-51-8	n-Butylbenzene	1.2		µg/l	1.0	1	"	"	"	"	"
135-98-8	sec-Butylbenzene	BRL		µg/l	1.0	1	"	"	"	"	"
98-06-6	tert-Butylbenzene	BRL		µg/l	1.0	1	"	"	"	"	"
75-15-0	Carbon disulfide	BRL		µg/l	5.0	1	"	"	"	"	"
56-23-5	Carbon tetrachloride	BRL		µg/l	1.0	1	"	"	"	"	"
108-90-7	Chlorobenzene	BRL		µg/l	1.0	1	"	"	"	"	"
75-00-3	Chloroethane	BRL		µg/l	2.0	1	"	"	"	"	"
67-66-3	Chloroform	BRL		µg/l	1.0	1	"	"	"	"	"
74-87-3	Chloromethane	BRL		µg/l	2.0	1	"	"	"	"	"
95-49-8	2-Chlorotoluene	BRL		µg/l	1.0	1	"	"	"	"	"
106-43-4	4-Chlorotoluene	BRL		µg/l	1.0	1	"	"	"	"	"
96-12-8	1,2-Dibromo-3-chloropropane	BRL		µg/l	2.0	1	"	"	"	"	"
124-48-1	Dibromochloromethane	BRL		µg/l	1.0	1	"	"	"	"	"
106-93-4	1,2-Dibromoethane (EDB)	BRL		µg/l	1.0	1	"	"	"	"	"
74-95-3	Dibromomethane	BRL		µg/l	1.0	1	"	"	"	"	"
95-50-1	1,2-Dichlorobenzene	BRL		µg/l	1.0	1	"	"	"	"	"
541-73-1	1,3-Dichlorobenzene	BRL		µg/l	1.0	1	"	"	"	"	"
106-46-7	1,4-Dichlorobenzene	BRL		µg/l	1.0	1	"	"	"	"	"
75-71-8	Dichlorodifluoromethane (Freon12)	BRL		µg/l	2.0	1	"	"	"	"	"
75-34-3	1,1-Dichloroethane	BRL		µg/l	1.0	1	"	"	"	"	"
107-06-2	1,2-Dichloroethane	BRL		µg/l	1.0	1	"	"	"	"	"
75-35-4	1,1-Dichloroethene	BRL		µg/l	1.0	1	"	"	"	"	"
156-59-2	cis-1,2-Dichloroethene	BRL		µg/l	1.0	1	"	"	"	"	"
156-60-5	trans-1,2-Dichloroethene	BRL		µg/l	1.0	1	"	"	"	"	"
78-87-5	1,2-Dichloropropane	BRL		µg/l	1.0	1	"	"	"	"	"
142-28-9	1,3-Dichloropropane	BRL		µg/l	1.0	1	"	"	"	"	"
594-20-7	2,2-Dichloropropane	BRL		µg/l	1.0	1	"	"	"	"	"
563-58-6	1,1-Dichloropropene	BRL		µg/l	1.0	1	"	"	"	"	"
10061-01-5	cis-1,3-Dichloropropene	BRL		µg/l	1.0	1	"	"	"	"	"
10061-02-6	trans-1,3-Dichloropropene	BRL		µg/l	1.0	1	"	"	"	"	"
100-41-4	Ethylbenzene	BRL		µg/l	1.0	1	"	"	"	"	"
87-68-3	Hexachlorobutadiene	BRL		µg/l	1.0	1	"	"	"	"	"
591-78-6	2-Hexanone (MBK)	BRL		µg/l	10.0	1	"	"	"	"	"
98-82-8	Isopropylbenzene	BRL		µg/l	1.0	1	"	"	"	"	"
99-87-6	4-Isopropyltoluene	1.1		µg/l	1.0	1	"	"	"	"	"
1634-04-4	Methyl tert-butyl ether	BRL		µg/l	1.0	1	"	"	"	"	"
108-10-1	4-Methyl-2-pentanone (MIBK)	BRL		µg/l	10.0	1	"	"	"	"	"
75-09-2	Methylene chloride	BRL		µg/l	10.0	1	"	"	"	"	"
91-20-3	Naphthalene	13.5		µg/l	1.0	1	"	"	"	"	"
103-65-1	n-Propylbenzene	BRL		µg/l	1.0	1	"	"	"	"	"
100-42-5	Styrene	BRL		µg/l	1.0	1	"	"	"	"	"

Sample Identification	Client Project #	Matrix	Collection Date/Time	Received
GW-8 Nash SA38246-01	2003 2871	Ground Water	07-Dec-05 12:00	09-Dec-05

CAS No.	Analyte(s)	Result	Flag	Units	*RDL	Dilution	Method Ref.	Prepared	Analyzed	Batch	Analyst
Volatile Organic Compounds											
Volatile Organic Compounds											
Prepared by method SW846 5030 Water MS											
630-20-6	1,1,1,2-Tetrachloroethane	BRL		µg/l	1.0	1	SW 846 8260B	21-Dec-05	21-Dec-05	5121221	KS
79-34-5	1,1,2,2-Tetrachloroethane	BRL		µg/l	1.0	1	"	"	"	"	"
127-18-4	Tetrachloroethene	BRL		µg/l	1.0	1	"	"	"	"	"
108-88-3	Toluene	BRL		µg/l	1.0	1	"	"	"	"	"
87-61-6	1,2,3-Trichlorobenzene	BRL		µg/l	1.0	1	"	"	"	"	"
120-82-1	1,2,4-Trichlorobenzene	BRL		µg/l	1.0	1	"	"	"	"	"
71-55-6	1,1,1-Trichloroethane	BRL		µg/l	1.0	1	"	"	"	"	"
79-00-5	1,1,2-Trichloroethane	BRL		µg/l	1.0	1	"	"	"	"	"
79-01-6	Trichloroethene	BRL		µg/l	1.0	1	"	"	"	"	"
75-69-4	Trichlorofluoromethane (Freon 11)	BRL		µg/l	1.0	1	"	"	"	"	"
96-18-4	1,2,3-Trichloropropane	BRL		µg/l	1.0	1	"	"	"	"	"
95-63-6	1,2,4-Trimethylbenzene	9.1		µg/l	1.0	1	"	"	"	"	"
108-67-8	1,3,5-Trimethylbenzene	3.3		µg/l	1.0	1	"	"	"	"	"
75-01-4	Vinyl chloride	BRL		µg/l	1.0	1	"	"	"	"	"
1330-20-7	m,p-Xylene	BRL		µg/l	2.0	1	"	"	"	"	"
95-47-6	o-Xylene	1.4		µg/l	1.0	1	"	"	"	"	"
109-99-9	Tetrahydrofuran	BRL		µg/l	10.0	1	"	"	"	"	"
60-29-7	Ethyl ether	BRL		µg/l	1.0	1	"	"	"	"	"
994-05-8	Tert-amyl methyl ether	BRL		µg/l	1.0	1	"	"	"	"	"
637-92-3	Ethyl tert-butyl ether	BRL		µg/l	1.0	1	"	"	"	"	"
108-20-3	Di-isopropyl ether	BRL		µg/l	1.0	1	"	"	"	"	"
75-65-0	Tert-Butanol / butyl alcohol	BRL		µg/l	10.0	1	"	"	"	"	"
123-91-1	1,4-Dioxane	BRL		µg/l	20.0	1	"	"	"	"	"
Surrogate recoveries:											
460-00-4	*4-Bromofluorobenzene*	*101*		*70-130 %*			"	"	"	"	"
2037-26-5	*Toluene-d8*	*96.4*		*70-130 %*			"	"	"	"	"
17060-07-0	*1,2-Dichloroethane-d4*	*105*		*70-130 %*			"	"	"	"	"
1868-53-7	*Dibromofluoromethane*	*97.8*		*70-130 %*			"	"	"	"	"
Microextractable Organic Compounds											
106-93-4	1,2-Dibromoethane (EDB)	BRL		µg/l	0.0100	1	EPA 504.1	14-Dec-05	15-Dec-05	5120765	MB
Extractable Petroleum Hydrocarbons											
EPH Aliphatic/Aromatic Ranges											
Prepared by method SW846 3510C											
	C9-C18 Aliphatic Hydrocarbons	BRL		mg/l	0.2	1	+MADEP 5/2004 R	14-Dec-05	19-Dec-05	5120808	JD
	C19-C36 Aliphatic Hydrocarbons	BRL		mg/l	0.2	1	"	"	"	"	"
	C11-C22 Aromatic Hydrocarbons	BRL		mg/l	0.2	1	"	"	"	"	"
	Unadjusted C11-C22 Aromatic Hydrocarbons	BRL		mg/l	0.2	1	"	"	"	"	"
	Total Petroleum Hydrocarbons	0.2		mg/l	0.2	1	"	"	"	"	"
	Unadjusted Total Petroleum Hydrocarbons	0.2		mg/l	0.2	1	"	"	"	"	"
EPH Target PAH Analytes											
Prepared by method SW846 3510C											
91-20-3	Naphthalene	BRL		µg/l	6.25	1	"	"	"	"	"
91-57-6	2-Methylnaphthalene	BRL		µg/l	6.25	1	"	"	"	"	"
208-96-8	Acenaphthylene	BRL		µg/l	6.25	1	"	"	"	"	"
83-32-9	Acenaphthene	BRL		µg/l	6.25	1	"	"	"	"	"
86-73-7	Fluorene	BRL		µg/l	6.25	1	"	"	"	"	"
85-01-8	Phenanthrene	BRL		µg/l	6.25	1	"	"	"	"	"

Sample Identification	Client Project #	Matrix	Collection Date/Time	Received
GW-8 Nash SA38246-01	2003 2871	Ground Water	07-Dec-05 12:00	09-Dec-05

CAS No.	Analyte(s)	Result	Flag	Units	*RDL	Dilution	Method Ref.	Prepared	Analyzed	Batch	Analyst
Extractable Petroleum Hydrocarbons											
EPH Target PAH Analytes											
Prepared by method SW846 3510C											
120-12-7	Anthracene	BRL		µg/l	6.25	1	+MADEP 5/2004 R	14-Dec-05	19-Dec-05	5120808	JD
206-44-0	Fluoranthene	BRL		µg/l	6.25	1	"	"	"	"	"
129-00-0	Pyrene	BRL		µg/l	6.25	1	"	"	"	"	"
56-55-3	Benzo (a) anthracene	BRL		µg/l	6.25	1	"	"	"	"	"
218-01-9	Chrysene	BRL		µg/l	6.25	1	"	"	"	"	"
205-99-2	Benzo (b) fluoranthene	BRL		µg/l	6.25	1	"	"	"	"	"
207-08-9	Benzo (k) fluoranthene	BRL		µg/l	6.25	1	"	"	"	"	"
50-32-8	Benzo (a) pyrene	BRL		µg/l	6.25	1	"	"	"	"	"
193-39-5	Indeno (1,2,3-cd) pyrene	BRL		µg/l	6.25	1	"	"	"	"	"
53-70-3	Dibenzo (a,h) anthracene	BRL		µg/l	6.25	1	"	"	"	"	"
191-24-2	Benzo (g,h,i) perylene	BRL		µg/l	6.25	1	"	"	"	"	"
Surrogate recoveries:											
3386-33-2	*1-Chlorooctadecane*	*82.7*		*40-140 %*			"	"	"	"	"
84-15-1	*Ortho-Terphenyl*	*59.2*		*40-140 %*			"	"	"	"	"
580-13-2	*2-Bromonaphthalene*	*66.8*		*40-140 %*			"	"	"	"	"
321-60-8	*2-Fluorobiphenyl*	*104*		*40-140 %*			"	"	"	"	"
	Non-polar material (SGT-HEM)	BRL		mg/l	1.0	1	EPA 1664	14-Dec-05	16-Dec-05	5120777	JK
Semivolatile Organic Compounds by GC											
Polychlorinated Biphenyls by EPA 608											
Prepared by method SW846 3535											
12674-11-2	PCB 1016	BRL		µg/l	0.211	1	EPA 608	13-Dec-05	15-Dec-05	5120705	TG
11104-28-2	PCB 1221	BRL		µg/l	0.211	1	"	"	"	"	"
11141-16-5	PCB 1232	BRL		µg/l	0.211	1	"	"	"	"	"
53469-21-9	PCB 1242	BRL		µg/l	0.211	1	"	"	"	"	"
12672-29-6	PCB 1248	BRL		µg/l	0.211	1	"	"	"	"	"
11097-69-1	PCB 1254	BRL		µg/l	0.211	1	"	"	"	"	"
11096-82-5	PCB 1260	BRL		µg/l	0.211	1	"	"	"	"	"
37324-23-5	PCB 1262	BRL		µg/l	0.211	1	"	"	"	"	"
11100-14-4	PCB 1268	BRL		µg/l	0.211	1	"	"	"	"	"
Surrogate recoveries:											
10386-84-2	*4,4-DB-Octafluorobiphenyl (Sr)*	*79.6*		*30-150 %*			"	"	"	"	"
2051-24-3	*Decachlorobiphenyl (Sr)*	*110*		*30-150 %*			"	"	"	"	"
Semivolatile Organic Compounds by GCMS											
Semivolatile Organic Compounds by EPA 625											
Prepared by method SW846 3535											
83-32-9	Acenaphthene	BRL		µg/l	5.00	1	EPA 625	13-Dec-05	15-Dec-05	5120702	M.B
208-96-8	Acenaphthylene	BRL		µg/l	5.00	1	"	"	"	"	"
62-53-3	Aniline	BRL		µg/l	5.00	1	"	"	"	"	"
120-12-7	Anthracene	BRL		µg/l	5.00	1	"	"	"	"	"
103-33-3	Azobenzene/Diphenyldiazine	BRL		µg/l	5.00	1	"	"	"	"	"
92-87-5	Benzidine	BRL		µg/l	5.00	1	"	"	"	"	"
56-55-3	Benzo (a) anthracene	BRL		µg/l	5.00	1	"	"	"	"	"
50-32-8	Benzo (a) pyrene	BRL		µg/l	5.00	1	"	"	"	"	"
205-99-2	Benzo (b) fluoranthene	BRL		µg/l	5.00	1	"	"	"	"	"
191-24-2	Benzo (g,h,i) perylene	BRL		µg/l	5.00	1	"	"	"	"	"
207-08-9	Benzo (k) fluoranthene	BRL		µg/l	5.00	1	"	"	"	"	"
65-85-0	Benzoic acid	BRL		µg/l	5.00	1	"	"	"	"	"
100-51-6	Benzyl alcohol	BRL		µg/l	5.00	1	"	"	"	"	"
111-91-1	Bis(2-chloroethoxy)methane	BRL		µg/l	5.00	1	"	"	"	"	"

Sample Identification	Client Project #	Matrix	Collection Date/Time	Received
GW-8 Nash SA38246-01	2003 2871	Ground Water	07-Dec-05 12:00	09-Dec-05

CAS No.	*Analyte(s)*	*Result*	*Flag*	*Units*	**RDL*	*Dilution*	*Method Ref.*	*Prepared*	*Analyzed*	*Batch*	*Analyst*
Semivolatile Organic Compounds by GCMS											
Semivolatile Organic Compounds by EPA 625											
Prepared by method SW846 3535											
111-44-4	Bis(2-chloroethyl)ether	BRL		µg/l	5.00	1	EPA 625	13-Dec-05	15-Dec-05	5120702	M.B
39638-32-9	Bis(2-chloroisopropyl)ether	BRL		µg/l	5.00	1	"	"	"	"	"
117-81-7	Bis(2-ethylhexyl)phthalate	BRL		µg/l	5.00	1	"	"	"	"	"
101-55-3	4-Bromophenyl phenyl ether	BRL		µg/l	5.00	1	"	"	"	"	"
85-68-7	Butyl benzyl phthalate	BRL		µg/l	5.00	1	"	"	"	"	"
86-74-8	Carbazole	BRL		µg/l	5.00	1	"	"	"	"	"
59-50-7	4-Chloro-3-methylphenol	BRL		µg/l	5.00	1	"	"	"	"	"
106-47-8	4-Chloroaniline	BRL		µg/l	5.00	1	"	"	"	"	"
91-58-7	2-Chloronaphthalene	BRL		µg/l	5.00	1	"	"	"	"	"
95-57-8	2-Chlorophenol	BRL		µg/l	5.00	1	"	"	"	"	"
7005-72-3	4-Chlorophenyl phenyl ether	BRL		µg/l	5.00	1	"	"	"	"	"
218-01-9	Chrysene	BRL		µg/l	5.00	1	"	"	"	"	"
53-70-3	Dibenzo (a,h) anthracene	BRL		µg/l	5.00	1	"	"	"	"	"
132-64-9	Dibenzofuran	BRL		µg/l	5.00	1	"	"	"	"	"
95-50-1	1,2-Dichlorobenzene	BRL		µg/l	5.00	1	"	"	"	"	"
541-73-1	1,3-Dichlorobenzene	BRL		µg/l	5.00	1	"	"	"	"	"
106-46-7	1,4-Dichlorobenzene	BRL		µg/l	5.00	1	"	"	"	"	"
91-94-1	3,3´-Dichlorobenzidine	BRL		µg/l	5.00	1	"	"	"	"	"
120-83-2	2,4-Dichlorophenol	BRL		µg/l	5.00	1	"	"	"	"	"
84-66-2	Diethyl phthalate	BRL		µg/l	5.00	1	"	"	"	"	"
131-11-3	Dimethyl phthalate	BRL		µg/l	5.00	1	"	"	"	"	"
105-67-9	2,4-Dimethylphenol	BRL		µg/l	5.00	1	"	"	"	"	"
84-74-2	Di-n-butyl phthalate	BRL		µg/l	5.00	1	"	"	"	"	"
534-52-1	4,6-Dinitro-2-methylphenol	BRL		µg/l	5.00	1	"	"	"	"	"
51-28-5	2,4-Dinitrophenol	BRL		µg/l	5.00	1	"	"	"	"	"
121-14-2	2,4-Dinitrotoluene	BRL		µg/l	5.00	1	"	"	"	"	"
606-20-2	2,6-Dinitrotoluene	BRL		µg/l	5.00	1	"	"	"	"	"
117-84-0	Di-n-octyl phthalate	BRL		µg/l	5.00	1	"	"	"	"	"
206-44-0	Fluoranthene	BRL		µg/l	5.00	1	"	"	"	"	"
86-73-7	Fluorene	BRL		µg/l	5.00	1	"	"	"	"	"
118-74-1	Hexachlorobenzene	BRL		µg/l	5.00	1	"	"	"	"	"
87-68-3	Hexachlorobutadiene	BRL		µg/l	5.00	1	"	"	"	"	"
77-47-4	Hexachlorocyclopentadiene	BRL		µg/l	5.00	1	"	"	"	"	"
67-72-1	Hexachloroethane	BRL		µg/l	5.00	1	"	"	"	"	"
193-39-5	Indeno (1,2,3-cd) pyrene	BRL		µg/l	5.00	1	"	"	"	"	"
78-59-1	Isophorone	BRL		µg/l	5.00	1	"	"	"	"	"
91-57-6	2-Methylnaphthalene	BRL		µg/l	5.00	1	"	"	"	"	"
95-48-7	2-Methylphenol	BRL		µg/l	5.00	1	"	"	"	"	"
108-39-4, 106-44-5	3,4-Methylphenol	BRL		µg/l	10.0	1	"	"	"	"	"
91-20-3	Naphthalene	BRL		µg/l	5.00	1	"	"	"	"	"
88-74-4	2-Nitroaniline	BRL		µg/l	5.00	1	"	"	"	"	"
99-09-2	3-Nitroaniline	BRL		µg/l	5.00	1	"	"	"	"	"
100-01-6	4-Nitroaniline	BRL		µg/l	5.00	1	"	"	"	"	"
98-95-3	Nitrobenzene	BRL		µg/l	5.00	1	"	"	"	"	"
88-75-5	2-Nitrophenol	BRL		µg/l	5.00	1	"	"	"	"	"
100-02-7	4-Nitrophenol	BRL		µg/l	5.00	1	"	"	"	"	"
62-75-9	N-Nitrosodimethylamine	BRL		µg/l	5.00	1	"	"	"	"	"
621-64-7	N-Nitrosodi-n-propylamine	BRL		µg/l	5.00	1	"	"	"	"	"
86-30-6	N-Nitrosodiphenylamine	BRL		µg/l	5.00	1	"	"	"	"	"
87-86-5	Pentachlorophenol	BRL		µg/l	5.00	1	"	"	"	"	"

Sample Identification	Client Project #	Matrix	Collection Date/Time	Received
GW-8 Nash SA38246-01	2003 2871	Ground Water	07-Dec-05 12:00	09-Dec-05

CAS No.	Analyte(s)	Result	Flag	Units	*RDL	Dilution	Method Ref.	Prepared	Analyzed	Batch	Analyst
Semivolatile Organic Compounds by GCMS											
Semivolatile Organic Compounds by EPA 625											
Prepared by method SW846 3535											
85-01-8	Phenanthrene	BRL		µg/l	5.00	1	EPA 625	13-Dec-05	15-Dec-05	5120702	M.B
108-95-2	Phenol	BRL		µg/l	5.00	1	"	"	"	"	"
129-00-0	Pyrene	BRL		µg/l	5.00	1	"	"	"	"	"
110-86-1	Pyridine	BRL		µg/l	5.00	1	"	"	"	"	"
120-82-1	1,2,4-Trichlorobenzene	BRL		µg/l	5.00	1	"	"	"	"	"
95-95-4	2,4,5-Trichlorophenol	BRL		µg/l	5.00	1	"	"	"	"	"
88-06-2	2,4,6-Trichlorophenol	BRL		µg/l	5.00	1	"	"	"	"	"
Surrogate recoveries:											
321-60-8	*2-Fluorobiphenyl*	*122*		*30-130 %*			"	"	"	"	"
367-12-4	*2-Fluorophenol*	*59.4*		*15-110 %*			"	"	"	"	"
4165-60-0	*Nitrobenzene-d5*	*50.9*		*30-130 %*			"	"	"	"	"
4165-62-2	*Phenol-d5*	*91.8*		*15-110 %*			"	"	"	"	"
1718-51-0	*Terphenyl-dl4*	*63.4*		*30-130 %*			"	"	"	"	"
118-79-6	*2,4,6-Tribromophenol*	*110*		*15-110 %*			"	"	"	"	"
Total Metals by EPA 200 Series Methods											
7440-22-4	Silver	BRL		mg/l	0.0100	1	EPA 200.7	19-Dec-05	20-Dec-05	5120978	RE
7440-38-2	Arsenic	BRL		mg/l	0.0080	1	"	"	"	"	"
7440-43-9	Cadmium	BRL		mg/l	0.0025	1	"	"	"	"	"
7440-47-3	Chromium	0.0052		mg/l	0.0050	1	"	"	"	"	"
7440-50-8	Copper	BRL		mg/l	0.0050	1	"	"	"	"	"
7439-89-6	Iron	3.41		mg/l	0.0050	1	"	"	"	"	"
7439-97-6	Mercury	BRL		mg/l	0.00020	1	EPA 245.2/7470A	19-Dec-05	20-Dec-05	5120979	YP
7440-02-0	Nickel	BRL		mg/l	0.0050	1	EPA 200.7	19-Dec-05	20-Dec-05	5120978	RE
7439-92-1	Lead	0.0120		mg/l	0.0075	1	"	"	"	"	"
7440-36-0	Antimony	BRL		mg/l	0.0120	1	"	"	"	"	"
7782-49-2	Selenium	BRL		mg/l	0.0150	1	"	"	"	"	"
7440-66-6	Zinc	0.0168		mg/l	0.0050	1	"	"	"	"	"
General Chemistry Parameters											
	Trivalent Chromium	0.0052		mg/l	0.0050	1	Calculation	19-Dec-05	20-Dec-05	5120978	RE
1854-029-9	Hexavalent Chromium	BRL	O-09	mg/l	0.005	1	SM3500CrD/7196A	12-Dec-05 10:20	12-Dec-05	5120655	ES
57-12-5	Cyanide (total)	BRL		mg/l	0.0100	1	10-204-00-1-A/ SW-846 9012A	15-Dec-05	15-Dec-05	5120881	JAK
Subcontracted Analyses											
	Total Suspended Solids	320		mg/l	10		SM2540D		12-Dec-05	'[none]'	CT007

Analyte(s)	Result	Flag	Units	*RDL	Spike Level	Source Result	%REC	%REC Limits	RPD	RPD Limit
Batch 5121221 - SW846 5030 Water MS										
Blank (5121221-BLK1)										
Prepared & Analyzed: 21-Dec-05										
Acetone	BRL		µg/l	10.0						
Acrylonitrile	BRL		µg/l	1.0						
Benzene	BRL		µg/l	1.0						
Bromobenzene	BRL		µg/l	1.0						
Bromochloromethane	BRL		µg/l	1.0						
Bromodichloromethane	BRL		µg/l	1.0						
Bromoform	BRL		µg/l	1.0						
Bromomethane	BRL		µg/l	2.0						
2-Butanone (MEK)	BRL		µg/l	10.0						
n-Butylbenzene	BRL		µg/l	1.0						
sec-Butylbenzene	BRL		µg/l	1.0						
tert-Butylbenzene	BRL		µg/l	1.0						
Carbon disulfide	BRL		µg/l	5.0						
Carbon tetrachloride	BRL		µg/l	1.0						
Chlorobenzene	BRL		µg/l	1.0						
Chloroethane	BRL		µg/l	2.0						
Chloroform	BRL		µg/l	1.0						
Chloromethane	BRL		µg/l	2.0						
2-Chlorotoluene	BRL		µg/l	1.0						
4-Chlorotoluene	BRL		µg/l	1.0						
1,2-Dibromo-3-chloropropane	BRL		µg/l	2.0						
Dibromochloromethane	BRL		µg/l	1.0						
1,2-Dibromoethane (EDB)	BRL		µg/l	1.0						
Dibromomethane	BRL		µg/l	1.0						
1,2-Dichlorobenzene	BRL		µg/l	1.0						
1,3-Dichlorobenzene	BRL		µg/l	1.0						
1,4-Dichlorobenzene	BRL		µg/l	1.0						
Dichlorodifluoromethane (Freon12)	BRL		µg/l	2.0						
1,1-Dichloroethane	BRL		µg/l	1.0						
1,2-Dichloroethane	BRL		µg/l	1.0						
1,1-Dichloroethene	BRL		µg/l	1.0						
cis-1,2-Dichloroethene	BRL		µg/l	1.0						
trans-1,2-Dichloroethene	BRL		µg/l	1.0						
1,2-Dichloropropane	BRL		µg/l	1.0						
1,3-Dichloropropane	BRL		µg/l	1.0						
2,2-Dichloropropane	BRL		µg/l	1.0						
1,1-Dichloropropene	BRL		µg/l	1.0						
cis-1,3-Dichloropropene	BRL		µg/l	1.0						
trans-1,3-Dichloropropene	BRL		µg/l	1.0						
Ethylbenzene	BRL		µg/l	1.0						
Hexachlorobutadiene	BRL		µg/l	1.0						
2-Hexanone (MBK)	BRL		µg/l	10.0						
Isopropylbenzene	BRL		µg/l	1.0						
4-Isopropyltoluene	BRL		µg/l	1.0						
Methyl tert-butyl ether	BRL		µg/l	1.0						
4-Methyl-2-pentanone (MIBK)	BRL		µg/l	10.0						
Methylene chloride	BRL		µg/l	10.0						
Naphthalene	BRL		µg/l	1.0						
n-Propylbenzene	BRL		µg/l	1.0						
Styrene	BRL		µg/l	1.0						
1,1,1,2-Tetrachloroethane	BRL		µg/l	1.0						
1,1,2,2-Tetrachloroethane	BRL		µg/l	1.0						
Tetrachloroethene	BRL		µg/l	1.0						
Toluene	BRL		µg/l	1.0						
1,2,3-Trichlorobenzene	BRL		µg/l	1.0						

Volatile Organic Compounds - Quality Control

Analyte(s)	Result	Flag	Units	*RDL	Spike Level	Source Result	%REC	%REC Limits	RPD	RPD Limit
Batch 5121221 - SW846 5030 Water MS										
Blank (5121221-BLK1)										
Prepared & Analyzed: 21-Dec-05										
1,2,4-Trichlorobenzene	BRL		µg/l	1.0						
1,1,1-Trichloroethane	BRL		µg/l	1.0						
1,1,2-Trichloroethane	BRL		µg/l	1.0						
Trichloroethene	BRL		µg/l	1.0						
Trichlorofluoromethane (Freon 11)	BRL		µg/l	1.0						
1,2,3-Trichloropropane	BRL		µg/l	1.0						
1,2,4-Trimethylbenzene	BRL		µg/l	1.0						
1,3,5-Trimethylbenzene	BRL		µg/l	1.0						
Vinyl chloride	BRL		µg/l	1.0						
m,p-Xylene	BRL		µg/l	2.0						
o-Xylene	BRL		µg/l	1.0						
Tetrahydrofuran	BRL		µg/l	10.0						
Ethyl ether	BRL		µg/l	1.0						
Tert-amyl methyl ether	BRL		µg/l	1.0						
Ethyl tert-butyl ether	BRL		µg/l	1.0						
Di-isopropyl ether	BRL		µg/l	1.0						
Tert-Butanol / butyl alcohol	BRL		µg/l	10.0						
1,4-Dioxane	BRL		µg/l	20.0						
Surrogate: 4-Bromofluorobenzene	*50.2*		µg/l		*50.0*		*100*	*70-130*		
Surrogate: Toluene-d8	*48.5*		µg/l		*50.0*		*97.0*	*70-130*		
Surrogate: 1,2-Dichloroethane-d4	*53.5*		µg/l		*50.0*		*107*	*70-130*		
Surrogate: Dibromofluoromethane	*49.6*		µg/l		*50.0*		*99.2*	*70-130*		
LCS (5121221-BS1)										
Prepared & Analyzed: 21-Dec-05										
Acetone	15.6		µg/l		20.0		78.0	2.17-194		
Acrylonitrile	16.3		µg/l		20.0		81.5	70-130		
Benzene	20.5		µg/l		20.0		102	70-130		
Bromobenzene	20.9		µg/l		20.0		104	70-130		
Bromochloromethane	19.3		µg/l		20.0		96.5	70-130		
Bromodichloromethane	21.7		µg/l		20.0		108	70-130		
Bromoform	21.5		µg/l		20.0		108	70-130		
Bromomethane	23.8		µg/l		20.0		119	61.9-145		
2-Butanone (MEK)	17.5		µg/l		20.0		87.5	14.9-165		
n-Butylbenzene	24.8		µg/l		20.0		124	70-130		
sec-Butylbenzene	23.4		µg/l		20.0		117	70-130		
tert-Butylbenzene	22.3		µg/l		20.0		112	70-130		
Carbon disulfide	24.9		µg/l		20.0		124	70-130		
Carbon tetrachloride	22.5		µg/l		20.0		112	70-130		
Chlorobenzene	20.3		µg/l		20.0		102	70-130		
Chloroethane	23.3		µg/l		20.0		116	64.4-134		
Chloroform	21.0		µg/l		20.0		105	70-130		
Chloromethane	27.6	QC-1	µg/l		20.0		138	70-130		
2-Chlorotoluene	22.1		µg/l		20.0		110	70-130		
4-Chlorotoluene	22.0		µg/l		20.0		110	70-130		
1,2-Dibromo-3-chloropropane	22.1		µg/l		20.0		110	70-130		
Dibromochloromethane	19.6		µg/l		20.0		98.0	45.3-146		
1,2-Dibromoethane (EDB)	19.4		µg/l		20.0		97.0	70-130		
Dibromomethane	20.3		µg/l		20.0		102	70-130		
1,2-Dichlorobenzene	21.3		µg/l		20.0		106	70-130		
1,3-Dichlorobenzene	21.5		µg/l		20.0		108	70-130		
1,4-Dichlorobenzene	21.6		µg/l		20.0		108	70-130		
Dichlorodifluoromethane (Freon12)	39.6		µg/l		20.0		198	49.6-201		
1,1-Dichloroethane	20.8		µg/l		20.0		104	70-130		
1,2-Dichloroethane	20.2		µg/l		20.0		101	70-130		
1,1-Dichloroethene	21.1		µg/l		20.0		106	70-130		

Analyte(s)	Result	Flag	Units	*RDL	Spike Level	Source Result	%REC	%REC Limits	RPD	RPD Limit
Batch 5121221 - SW846 5030 Water MS										
LCS (5121221-BS1)										
Prepared & Analyzed: 21-Dec-05										
cis-1,2-Dichloroethene	20.1		µg/l		20.0		100	70-130		
trans-1,2-Dichloroethene	20.1		µg/l		20.0		100	70-130		
1,2-Dichloropropane	20.0		µg/l		20.0		100	70-130		
1,3-Dichloropropane	20.8		µg/l		20.0		104	70-130		
2,2-Dichloropropane	26.4	QC-1	µg/l		20.0		132	70-130		
1,1-Dichloropropene	22.0		µg/l		20.0		110	70-130		
cis-1,3-Dichloropropene	21.4		µg/l		20.0		107	70-130		
trans-1,3-Dichloropropene	21.0		µg/l		20.0		105	70-130		
Ethylbenzene	21.7		µg/l		20.0		108	70-130		
Hexachlorobutadiene	22.9		µg/l		20.0		114	68.6-137		
2-Hexanone (MBK)	17.1		µg/l		20.0		85.5	70-130		
Isopropylbenzene	21.0		µg/l		20.0		105	70-130		
4-Isopropyltoluene	23.9		µg/l		20.0		120	70-130		
Methyl tert-butyl ether	20.1		µg/l		20.0		100	70-130		
4-Methyl-2-pentanone (MIBK)	18.0		µg/l		20.0		90.0	48.6-137		
Methylene chloride	19.5		µg/l		20.0		97.5	70-130		
Naphthalene	21.4		µg/l		20.0		107	70-130		
n-Propylbenzene	22.7		µg/l		20.0		114	70-130		
Styrene	21.4		µg/l		20.0		107	70-130		
1,1,1,2-Tetrachloroethane	19.9		µg/l		20.0		99.5	70-130		
1,1,2,2-Tetrachloroethane	22.5		µg/l		20.0		112	70-130		
Tetrachloroethene	20.6		µg/l		20.0		103	70-130		
Toluene	20.7		µg/l		20.0		104	70-130		
1,2,3-Trichlorobenzene	21.3		µg/l		20.0		106	70-130		
1,2,4-Trichlorobenzene	21.5		µg/l		20.0		108	70-130		
1,1,1-Trichloroethane	22.1		µg/l		20.0		110	70-130		
1,1,2-Trichloroethane	20.8		µg/l		20.0		104	70-130		
Trichloroethene	19.8		µg/l		20.0		99.0	70-130		
Trichlorofluoromethane (Freon 11)	26.6		µg/l		20.0		133	67.9-143		
1,2,3-Trichloropropane	21.8		µg/l		20.0		109	70-130		
1,2,4-Trimethylbenzene	22.4		µg/l		20.0		112	70-130		
1,3,5-Trimethylbenzene	22.4		µg/l		20.0		112	70-130		
Vinyl chloride	25.8		µg/l		20.0		129	70-130		
m,p-Xylene	41.7		µg/l		40.0		104	70-130		
o-Xylene	21.9		µg/l		20.0		110	70-130		
Tetrahydrofuran	18.0		µg/l		20.0		90.0	70-130		
Ethyl ether	20.0		µg/l		20.0		100	70-136		
Tert-amyl methyl ether	20.0		µg/l		20.0		100	70-130		
Ethyl tert-butyl ether	20.5		µg/l		20.0		102	70-130		
Di-isopropyl ether	19.9		µg/l		20.0		99.5	70-130		
Tert-Butanol / butyl alcohol	182		µg/l		200		91.0	70-130		
1,4-Dioxane	175		µg/l		200		87.5	36.5-156		
Surrogate: 4-Bromofluorobenzene	*51.8*		µg/l		*50.0*		*104*	*70-130*		
Surrogate: Toluene-d8	*46.5*		µg/l		*50.0*		*93.0*	*70-130*		
Surrogate: 1,2-Dichloroethane-d4	*49.8*		µg/l		*50.0*		*99.6*	*70-130*		
Surrogate: Dibromofluoromethane	*46.9*		µg/l		*50.0*		*93.8*	*70-130*		
LCS Dup (5121221-BSD1)										
Prepared & Analyzed: 21-Dec-05										
Acetone	19.1		µg/l		20.0		95.5	2.17-194	20.2	50
Acrylonitrile	17.0		µg/l		20.0		85.0	70-130	4.20	25
Benzene	16.6		µg/l		20.0		83.0	70-130	20.5	25
Bromobenzene	20.1		µg/l		20.0		100	70-130	3.92	25
Bromochloromethane	16.2		µg/l		20.0		81.0	70-130	17.5	25
Bromodichloromethane	17.7		µg/l		20.0		88.5	70-130	19.8	25
Bromoform	21.6		µg/l		20.0		108	70-130	0.00	25

Analyte(s)	Result	Flag	Units	*RDL	Spike Level	Source Result	%REC	%REC Limits	RPD	RPD Limit
Batch 5121221 - SW846 5030 Water MS										
LCS Dup (5121221-BSD1)										
Prepared & Analyzed: 21-Dec-05										
Bromomethane	21.3		µg/l		20.0		106	61.9-145	11.6	50
2-Butanone (MEK)	16.6		µg/l		20.0		83.0	14.9-165	5.28	50
n-Butylbenzene	23.4		µg/l		20.0		117	70-130	5.81	25
sec-Butylbenzene	21.7		µg/l		20.0		108	70-130	8.00	25
tert-Butylbenzene	20.6		µg/l		20.0		103	70-130	8.37	25
Carbon disulfide	16.9	QR-02	µg/l		20.0		84.5	70-130	37.9	25
Carbon tetrachloride	17.4	QR-02	µg/l		20.0		87.0	70-130	25.1	25
Chlorobenzene	19.6		µg/l		20.0		98.0	70-130	4.00	25
Chloroethane	18.0		µg/l		20.0		90.0	64.4-134	25.2	50
Chloroform	16.5		µg/l		20.0		82.5	70-130	24.0	25
Chloromethane	20.1	QR-05	µg/l		20.0		100	70-130	31.9	25
2-Chlorotoluene	20.2		µg/l		20.0		101	70-130	8.53	25
4-Chlorotoluene	20.4		µg/l		20.0		102	70-130	7.55	25
1,2-Dibromo-3-chloropropane	23.6		µg/l		20.0		118	70-130	7.02	25
Dibromochloromethane	16.4		µg/l		20.0		82.0	45.3-146	17.8	50
1,2-Dibromoethane (EDB)	16.6		µg/l		20.0		83.0	70-130	15.6	25
Dibromomethane	17.6		µg/l		20.0		88.0	70-130	14.7	25
1,2-Dichlorobenzene	20.9		µg/l		20.0		104	70-130	1.90	25
1,3-Dichlorobenzene	20.2		µg/l		20.0		101	70-130	6.70	25
1,4-Dichlorobenzene	21.2		µg/l		20.0		106	70-130	1.87	25
Dichlorodifluoromethane (Freon12)	27.2		µg/l		20.0		136	49.6-201	37.1	50
1,1-Dichloroethane	16.7		µg/l		20.0		83.5	70-130	21.9	25
1,2-Dichloroethane	16.9		µg/l		20.0		84.5	70-130	17.8	25
1,1-Dichloroethene	15.8	QR-02	µg/l		20.0		79.0	70-130	29.2	25
cis-1,2-Dichloroethene	16.6		µg/l		20.0		83.0	70-130	18.6	25
trans-1,2-Dichloroethene	16.0		µg/l		20.0		80.0	70-130	22.2	25
1,2-Dichloropropane	16.7		µg/l		20.0		83.5	70-130	18.0	25
1,3-Dichloropropane	17.5		µg/l		20.0		87.5	70-130	17.2	25
2,2-Dichloropropane	20.6		µg/l		20.0		103	70-130	24.7	25
1,1-Dichloropropene	17.2		µg/l		20.0		86.0	70-130	24.5	25
cis-1,3-Dichloropropene	17.5		µg/l		20.0		87.5	70-130	20.1	25
trans-1,3-Dichloropropene	17.8		µg/l		20.0		89.0	70-130	16.5	25
Ethylbenzene	20.5		µg/l		20.0		102	70-130	5.71	25
Hexachlorobutadiene	21.2		µg/l		20.0		106	68.6-137	7.27	50
2-Hexanone (MBK)	15.6		µg/l		20.0		78.0	70-130	9.17	25
Isopropylbenzene	19.8		µg/l		20.0		99.0	70-130	5.88	25
4-Isopropyltoluene	22.5		µg/l		20.0		112	70-130	6.90	25
Methyl tert-butyl ether	17.5		µg/l		20.0		87.5	70-130	13.3	25
4-Methyl-2-pentanone (MIBK)	16.2		µg/l		20.0		81.0	48.6-137	10.5	50
Methylene chloride	15.8		µg/l		20.0		79.0	70-130	21.0	25
Naphthalene	22.0		µg/l		20.0		110	70-130	2.76	25
n-Propylbenzene	21.2		µg/l		20.0		106	70-130	7.27	25
Styrene	20.3		µg/l		20.0		102	70-130	4.78	25
1,1,1,2-Tetrachloroethane	19.9		µg/l		20.0		99.5	70-130	0.00	25
1,1,2,2-Tetrachloroethane	23.0		µg/l		20.0		115	70-130	2.64	25
Tetrachloroethene	16.4		µg/l		20.0		82.0	70-130	22.7	25
Toluene	16.1	QR-02	µg/l		20.0		80.5	70-130	25.5	25
1,2,3-Trichlorobenzene	21.3		µg/l		20.0		106	70-130	0.00	25
1,2,4-Trichlorobenzene	21.2		µg/l		20.0		106	70-130	1.87	25
1,1,1-Trichloroethane	17.3		µg/l		20.0		86.5	70-130	23.9	25
1,1,2-Trichloroethane	17.8		µg/l		20.0		89.0	70-130	15.5	25
Trichloroethene	16.0		µg/l		20.0		80.0	70-130	21.2	25
Trichlorofluoromethane (Freon 11)	20.1		µg/l		20.0		100	67.9-143	28.3	50
1,2,3-Trichloropropane	23.2		µg/l		20.0		116	70-130	6.22	25
1,2,4-Trimethylbenzene	21.2		µg/l		20.0		106	70-130	5.50	25

Volatile Organic Compounds - Quality Control

Analyte(s)	Result	Flag	Units	*RDL	Spike Level	Source Result	%REC	%REC Limits	RPD	RPD Limit
Batch 5121221 - SW846 5030 Water MS										
LCS Dup (5121221-BSD1)										
Prepared & Analyzed: 21-Dec-05										
1,3,5-Trimethylbenzene	20.8		µg/l		20.0		104	70-130	7.41	25
Vinyl chloride	27.1	QC-1	µg/l		20.0		136	70-130	5.28	25
m,p-Xylene	40.2		µg/l		40.0		100	70-130	3.92	25
o-Xylene	20.6		µg/l		20.0		103	70-130	6.57	25
Tetrahydrofuran	16.7		µg/l		20.0		83.5	70-130	7.49	25
Ethyl ether	17.0		µg/l		20.0		85.0	70-136	16.2	50
Tert-amyl methyl ether	17.2		µg/l		20.0		86.0	70-130	15.1	25
Ethyl tert-butyl ether	17.2		µg/l		20.0		86.0	70-130	17.0	25
Di-isopropyl ether	16.5		µg/l		20.0		82.5	70-130	18.7	25
Tert-Butanol / butyl alcohol	149		µg/l		200		74.5	70-130	19.9	25
1,4-Dioxane	167		µg/l		200		83.5	36.5-156	4.68	25
Surrogate: 4-Bromofluorobenzene	*51.7*		µg/l		*50.0*		*103*	*70-130*		
Surrogate: Toluene-d8	*37.9*		µg/l		*50.0*		*75.8*	*70-130*		
Surrogate: 1,2-Dichloroethane-d4	*42.9*		µg/l		*50.0*		*85.8*	*70-130*		
Surrogate: Dibromofluoromethane	*39.1*		µg/l		*50.0*		*78.2*	*70-130*		
Matrix Spike (5121221-MS1) **Source: SA38543-21**										
Prepared & Analyzed: 21-Dec-05										
Benzene	23.0		µg/l		20.0	BRL	115	70-130		
Chlorobenzene	22.5		µg/l		20.0	BRL	112	70-130		
1,1-Dichloroethene	25.2		µg/l		20.0	BRL	126	70-130		
Toluene	22.2		µg/l		20.0	BRL	111	70-130		
Trichloroethene	22.5		µg/l		20.0	BRL	112	70-130		
Surrogate: 4-Bromofluorobenzene	*49.6*		µg/l		*50.0*		*99.2*	*70-130*		
Surrogate: Toluene-d8	*47.4*		µg/l		*50.0*		*94.8*	*70-130*		
Surrogate: 1,2-Dichloroethane-d4	*48.6*		µg/l		*50.0*		*97.2*	*70-130*		
Surrogate: Dibromofluoromethane	*48.1*		µg/l		*50.0*		*96.2*	*70-130*		
Matrix Spike Dup (5121221-MSD1) **Source: SA38543-21**										
Prepared & Analyzed: 21-Dec-05										
Benzene	22.7		µg/l		20.0	BRL	114	70-130	0.873	30
Chlorobenzene	22.4		µg/l		20.0	BRL	112	70-130	0.00	30
1,1-Dichloroethene	23.7		µg/l		20.0	BRL	118	70-130	6.56	30
Toluene	22.8		µg/l		20.0	BRL	114	70-130	2.67	30
Trichloroethene	21.8		µg/l		20.0	BRL	109	70-130	2.71	30
Surrogate: 4-Bromofluorobenzene	*50.0*		µg/l		*50.0*		*100*	*70-130*		
Surrogate: Toluene-d8	*48.7*		µg/l		*50.0*		*97.4*	*70-130*		
Surrogate: 1,2-Dichloroethane-d4	*47.8*		µg/l		*50.0*		*95.6*	*70-130*		
Surrogate: Dibromofluoromethane	*47.7*		µg/l		*50.0*		*95.4*	*70-130*		

Microextractable Organic Compounds - Quality Control

Analyte(s)	Result	Flag	Units	*RDL	Spike Level	Source Result	%REC	%REC Limits	RPD	RPD Limit
Batch 5120765 - Microextr. by 504.1										
Blank (5120765-BLK1)										
Prepared: 14-Dec-05 Analyzed: 15-Dec-05										
1,2-Dibromoethane (EDB)	BRL		µg/l	0.0100						
LCS (5120765-BS1)										
Prepared: 14-Dec-05 Analyzed: 15-Dec-05										
1,2-Dibromoethane (EDB)	0.290		µg/l	0.0100	0.200		145	50-150		
Duplicate (5120765-DUP1) **Source: SA38211-06**										
Prepared: 14-Dec-05 Analyzed: 15-Dec-05										
1,2-Dibromoethane (EDB)	BRL		µg/l	0.0100		BRL				30

This laboratory report is not valid without an authorized signature on the cover page.

Extractable Petroleum Hydrocarbons - Quality Control

Analyte(s)	Result	Flag	Units	*RDL	Spike Level	Source Result	%REC	%REC Limits	RPD	RPD Limit
Batch 5120777 - SW846 3510C										
Blank (5120777-BLK1)										
Prepared: 14-Dec-05 Analyzed: 16-Dec-05										
Non-polar material (SGT-HEM)	BRL		mg/l	1.0						
LCS (5120777-BS1)										
Prepared: 14-Dec-05 Analyzed: 16-Dec-05										
Non-polar material (SGT-HEM)	74.1		mg/l		82.0		90.4	0-200		
Duplicate (5120777-DUP1) **Source: SA38369-01**										
Prepared: 14-Dec-05 Analyzed: 16-Dec-05										
Non-polar material (SGT-HEM)	BRL		mg/l	1.0		BRL				200
Batch 5120808 - SW846 3510C										
Blank (5120808-BLK1)										
Prepared: 14-Dec-05 Analyzed: 19-Dec-05										
C9-C18 Aliphatic Hydrocarbons	BRL		mg/l	0.2						
C19-C36 Aliphatic Hydrocarbons	BRL		mg/l	0.2						
C11-C22 Aromatic Hydrocarbons	BRL		mg/l	0.2						
Unadjusted C11-C22 Aromatic Hydrocarbons	BRL		mg/l	0.2						
Total Petroleum Hydrocarbons	BRL		mg/l	0.2						
Unadjusted Total Petroleum Hydrocarbons	BRL		mg/l	0.2						
Naphthalene	BRL		µg/l	2.50						
2-Methylnaphthalene	BRL		µg/l	2.50						
Acenaphthylene	BRL		µg/l	2.50						
Acenaphthene	BRL		µg/l	2.50						
Fluorene	BRL		µg/l	2.50						
Phenanthrene	BRL		µg/l	2.50						
Anthracene	BRL		µg/l	2.50						
Fluoranthene	BRL		µg/l	2.50						
Pyrene	BRL		µg/l	2.50						
Benzo (a) anthracene	BRL		µg/l	2.50						
Chrysene	BRL		µg/l	2.50						
Benzo (b) fluoranthene	BRL		µg/l	2.50						
Benzo (k) fluoranthene	BRL		µg/l	2.50						
Benzo (a) pyrene	BRL		µg/l	2.50						
Indeno (1,2,3-cd) pyrene	BRL		µg/l	2.50						
Dibenzo (a,h) anthracene	BRL		µg/l	2.50						
Benzo (g,h,i) perylene	BRL		µg/l	2.50						
Surrogate: 1-Chlorooctadecane	*34.7*		µg/l		*50.0*		*69.4*	*40-140*		
Surrogate: Ortho-Terphenyl	*27.5*		µg/l		*50.0*		*55.0*	*40-140*		
Surrogate: 2-Bromonaphthalene	*29.6*		µg/l		*40.0*		*74.0*	*40-140*		
Surrogate: 2-Fluorobiphenyl	*26.3*		µg/l		*40.0*		*65.8*	*40-140*		
LCS (5120808-BS1)										
Prepared: 14-Dec-05 Analyzed: 19-Dec-05										
C9-C18 Aliphatic Hydrocarbons	0.322		mg/l	0.2	0.600		53.7	40-140		
C19-C36 Aliphatic Hydrocarbons	0.598		mg/l	0.2	0.800		74.8	40-140		
C11-C22 Aromatic Hydrocarbons	1.17		mg/l	0.2	1.70		68.8	40-140		
Naphthalene	38.0	QC-1	µg/l	2.50	100		38.0	40-140		
2-Methylnaphthalene	40.6		µg/l	2.50	100		40.6	40-140		
Acenaphthylene	53.5		µg/l	2.50	100		53.5	40-140		
Acenaphthene	49.3		µg/l	2.50	100		49.3	40-140		
Fluorene	54.6		µg/l	2.50	100		54.6	40-140		
Phenanthrene	49.2		µg/l	2.50	100		49.2	40-140		
Anthracene	71.8		µg/l	2.50	100		71.8	40-140		
Fluoranthene	66.2		µg/l	2.50	100		66.2	40-140		
Pyrene	67.0		µg/l	2.50	100		67.0	40-140		
Benzo (a) anthracene	52.7		µg/l	2.50	100		52.7	40-140		

Extractable Petroleum Hydrocarbons - Quality Control

Analyte(s)	Result	Flag	Units	*RDL	Spike Level	Source Result	%REC	%REC Limits	RPD	RPD Limit
Batch 5120808 - SW846 3510C										
LCS (5120808-BS1)										
Prepared: 14-Dec-05 Analyzed: 19-Dec-05										
Chrysene	67.2		µg/l	2.50	100		67.2	40-140		
Benzo (b) fluoranthene	45.7		µg/l	2.50	100		45.7	40-140		
Benzo (k) fluoranthene	67.3		µg/l	2.50	100		67.3	40-140		
Benzo (a) pyrene	60.7		µg/l	2.50	100		60.7	40-140		
Indeno (1,2,3-cd) pyrene	61.1		µg/l	2.50	100		61.1	40-140		
Dibenzo (a,h) anthracene	59.4		µg/l	2.50	100		59.4	40-140		
Benzo (g,h,i) perylene	59.0		µg/l	2.50	100		59.0	40-140		
Naphthalene (aliphatic fraction)	0.000100		µg/l		100		0.000100	0-200		
2-Methylnaphthalene (aliphatic fraction)	0.000100		µg/l		100		0.000100	0-200		
Surrogate: 1-Chlorooctadecane	*42.8*		µg/l		*50.0*		*85.6*	*40-140*		
Surrogate: Ortho-Terphenyl	*28.7*		µg/l		*50.0*		*57.4*	*40-140*		
Surrogate: 2-Bromonaphthalene	*30.4*		µg/l		*40.0*		*76.0*	*40-140*		
Surrogate: 2-Fluorobiphenyl	*26.7*		µg/l		*40.0*		*66.8*	*40-140*		
Naphthalene Breakthrough	0.00		%					0-5		
2-Methylnaphthalene Breakthrough	0.00		%					0-5		
Fractionation Check Standard (512080										
Prepared: 14-Dec-05 Analyzed: 16-Dec-05										
C9-C18 Aliphatic Hydrocarbons	0.431		mg/l	0.2	0.600		71.8	40-140		
C19-C36 Aliphatic Hydrocarbons	0.762		mg/l	0.2	0.800		95.2	40-140		
C11-C22 Aromatic Hydrocarbons	1.36		mg/l	0.2	1.70		80.0	40-140		
Naphthalene	49.8		µg/l	2.50	100		49.8	40-140		
2-Methylnaphthalene	52.0		µg/l	2.50	100		52.0	40-140		
Acenaphthylene	64.1		µg/l	2.50	100		64.1	40-140		
Acenaphthene	57.4		µg/l	2.50	100		57.4	40-140		
Fluorene	56.5		µg/l	2.50	100		56.5	40-140		
Phenanthrene	60.1		µg/l	2.50	100		60.1	40-140		
Anthracene	79.1		µg/l	2.50	100		79.1	40-140		
Fluoranthene	76.1		µg/l	2.50	100		76.1	40-140		
Pyrene	77.7		µg/l	2.50	100		77.7	40-140		
Benzo (a) anthracene	69.2		µg/l	2.50	100		69.2	40-140		
Chrysene	86.0		µg/l	2.50	100		86.0	40-140		
Benzo (b) fluoranthene	71.3		µg/l	2.50	100		71.3	40-140		
Benzo (k) fluoranthene	83.5		µg/l	2.50	100		83.5	40-140		
Benzo (a) pyrene	77.8		µg/l	2.50	100		77.8	40-140		
Indeno (1,2,3-cd) pyrene	69.8		µg/l	2.50	100		69.8	40-140		
Dibenzo (a,h) anthracene	70.6		µg/l	2.50	100		70.6	40-140		
Benzo (g,h,i) perylene	66.8		µg/l	2.50	100		66.8	40-140		
Naphthalene (aliphatic fraction)	0.000100		µg/l		100		0.000100	0-200		
2-Methylnaphthalene (aliphatic fraction)	0.000100		µg/l		100		0.000100	0-200		
Surrogate: 1-Chlorooctadecane	*51.0*		µg/l		*50.0*		*102*	*40-140*		
Surrogate: Ortho-Terphenyl	*32.0*		µg/l		*50.0*		*64.0*	*40-140*		
Surrogate: 2-Bromonaphthalene	*30.3*		µg/l		*40.0*		*75.8*	*40-140*		
Surrogate: 2-Fluorobiphenyl	*26.9*		µg/l		*40.0*		*67.2*	*40-140*		
LCS Dup (5120808-BSD1)										
Prepared: 14-Dec-05 Analyzed: 19-Dec-05										
C9-C18 Aliphatic Hydrocarbons	0.400		mg/l	0.2	0.600		66.7	40-140	21.6	25
C19-C36 Aliphatic Hydrocarbons	0.669		mg/l	0.2	0.800		83.6	40-140	11.1	25
C11-C22 Aromatic Hydrocarbons	1.24		mg/l	0.2	1.70		72.9	40-140	5.79	25
Naphthalene	43.9		µg/l	2.50	100		43.9	40-140	14.4	20
2-Methylnaphthalene	48.4		µg/l	2.50	100		48.4	40-140	17.5	20
Acenaphthylene	58.1		µg/l	2.50	100		58.1	40-140	8.24	20
Acenaphthene	54.1		µg/l	2.50	100		54.1	40-140	9.28	20
Fluorene	59.0		µg/l	2.50	100		59.0	40-140	7.75	20
Phenanthrene	53.9		µg/l	2.50	100		53.9	40-140	9.12	20

Extractable Petroleum Hydrocarbons - Quality Control

Analyte(s)	Result	Flag	Units	*RDL	Spike Level	Source Result	%REC	%REC Limits	RPD	RPD Limit
Batch 5120808 - SW846 3510C										
LCS Dup (5120808-BSD1)										
Prepared: 14-Dec-05 Analyzed: 19-Dec-05										
Anthracene	75.5		µg/l	2.50	100		75.5	40-140	5.02	20
Fluoranthene	70.1		µg/l	2.50	100		70.1	40-140	5.72	20
Pyrene	71.9		µg/l	2.50	100		71.9	40-140	7.06	20
Benzo (a) anthracene	56.9		µg/l	2.50	100		56.9	40-140	7.66	20
Chrysene	79.0		µg/l	2.50	100		79.0	40-140	16.1	20
Benzo (b) fluoranthene	46.1		µg/l	2.50	100		46.1	40-140	0.871	20
Benzo (k) fluoranthene	83.3	QR-02	µg/l	2.50	100		83.3	40-140	21.2	20
Benzo (a) pyrene	64.9		µg/l	2.50	100		64.9	40-140	6.69	20
Indeno (1,2,3-cd) pyrene	64.1		µg/l	2.50	100		64.1	40-140	4.79	20
Dibenzo (a,h) anthracene	64.2		µg/l	2.50	100		64.2	40-140	7.77	20
Benzo (g,h,i) perylene	62.9		µg/l	2.50	100		62.9	40-140	6.40	20
Naphthalene (aliphatic fraction)	0.000100		µg/l		100		0.000100	0-200	0.00	200
2-Methylnaphthalene (aliphatic fraction)	0.000100		µg/l		100		0.000100	0-200	0.00	200
Surrogate: 1-Chlorooctadecane	*41.0*		µg/l		*50.0*		*82.0*	*40-140*		
Surrogate: Ortho-Terphenyl	*30.4*		µg/l		*50.0*		*60.8*	*40-140*		
Surrogate: 2-Bromonaphthalene	*33.6*		µg/l		*40.0*		*84.0*	*40-140*		
Surrogate: 2-Fluorobiphenyl	*28.2*		µg/l		*40.0*		*70.5*	*40-140*		
Naphthalene Breakthrough	0.00		%					0-5		
2-Methylnaphthalene Breakthrough	0.00		%					0-5		

Semivolatile Organic Compounds by GC - Quality Control

Analyte(s)	Result	Flag	Units	*RDL	Spike Level	Source Result	%REC	%REC Limits	RPD	RPD Limit
Batch 5120705 - SW846 3535										
Blank (5120705-BLK1)										
Prepared: 13-Dec-05 Analyzed: 15-Dec-05										
PCB 1016	BRL		µg/l	0.200						
PCB 1221	BRL		µg/l	0.200						
PCB 1232	BRL		µg/l	0.200						
PCB 1242	BRL		µg/l	0.200						
PCB 1248	BRL		µg/l	0.200						
PCB 1254	BRL		µg/l	0.200						
PCB 1260	BRL		µg/l	0.200						
PCB 1262	BRL		µg/l	0.200						
PCB 1268	BRL		µg/l	0.200						
Surrogate: 4,4-DB-Octafluorobiphenyl (Sr)	*0.160*		µg/l		*0.200*		*80.0*	*30-150*		
Surrogate: Decachlorobiphenyl(Sr)	*0.220*		µg/l		*0.200*		*110*	*30-150*		
LCS (5120705-BS1)										
Prepared: 13-Dec-05 Analyzed: 15-Dec-05										
PCB 1016	2.49		µg/l	0.200	2.50		99.6	40-140		
PCB 1260	2.62		µg/l	0.200	2.50		105	40-140		
Surrogate: 4,4-DB-Octafluorobiphenyl (Sr)	*0.150*		µg/l		*0.200*		*75.0*	*30-150*		
Surrogate: Decachlorobiphenyl(Sr)	*0.230*		µg/l		*0.200*		*115*	*30-150*		

Semivolatile Organic Compounds by GCMS - Quality Control

Analyte(s)	Result	Flag	Units	*RDL	Spike Level	Source Result	%REC	%REC Limits	RPD	RPD Limit
Batch 5120702 - SW846 3535										
Blank (5120702-BLK1)										
Prepared: 13-Dec-05 Analyzed: 14-Dec-05										
Acenaphthene	BRL		µg/l	5.00						
Acenaphthylene	BRL		µg/l	5.00						
Aniline	BRL		µg/l	5.00						
Anthracene	BRL		µg/l	5.00						
Azobenzene/Diphenyldiazine	BRL		µg/l	5.00						
Benzidine	BRL		µg/l	5.00						
Benzo (a) anthracene	BRL		µg/l	5.00						
Benzo (a) pyrene	BRL		µg/l	5.00						
Benzo (b) fluoranthene	BRL		µg/l	5.00						
Benzo (g,h,i) perylene	BRL		µg/l	5.00						
Benzo (k) fluoranthene	BRL		µg/l	5.00						
Benzoic acid	BRL		µg/l	5.00						
Benzyl alcohol	BRL		µg/l	5.00						
Bis(2-chloroethoxy)methane	BRL		µg/l	5.00						
Bis(2-chloroethyl)ether	BRL		µg/l	5.00						
Bis(2-chloroisopropyl)ether	BRL		µg/l	5.00						
Bis(2-ethylhexyl)phthalate	BRL		µg/l	5.00						
4-Bromophenyl phenyl ether	BRL		µg/l	5.00						
Butyl benzyl phthalate	BRL		µg/l	5.00						
Carbazole	BRL		µg/l	5.00						
4-Chloro-3-methylphenol	BRL		µg/l	5.00						
4-Chloroaniline	BRL		µg/l	5.00						
2-Chloronaphthalene	BRL		µg/l	5.00						
2-Chlorophenol	BRL		µg/l	5.00						
4-Chlorophenyl phenyl ether	BRL		µg/l	5.00						
Chrysene	BRL		µg/l	5.00						
Dibenzo (a,h) anthracene	BRL		µg/l	5.00						
Dibenzofuran	BRL		µg/l	5.00						
1,2-Dichlorobenzene	BRL		µg/l	5.00						
1,3-Dichlorobenzene	BRL		µg/l	5.00						
1,4-Dichlorobenzene	BRL		µg/l	5.00						
3,3'-Dichlorobenzidine	BRL		µg/l	5.00						
2,4-Dichlorophenol	BRL		µg/l	5.00						
Diethyl phthalate	BRL		µg/l	5.00						
Dimethyl phthalate	BRL		µg/l	5.00						
2,4-Dimethylphenol	BRL		µg/l	5.00						
Di-n-butyl phthalate	BRL		µg/l	5.00						
4,6-Dinitro-2-methylphenol	BRL		µg/l	5.00						
2,4-Dinitrophenol	BRL		µg/l	5.00						
2,4-Dinitrotoluene	BRL		µg/l	5.00						
2,6-Dinitrotoluene	BRL		µg/l	5.00						
Di-n-octyl phthalate	BRL		µg/l	5.00						
Fluoranthene	BRL		µg/l	5.00						
Fluorene	BRL		µg/l	5.00						
Hexachlorobenzene	BRL		µg/l	5.00						
Hexachlorobutadiene	BRL		µg/l	5.00						
Hexachlorocyclopentadiene	BRL		µg/l	5.00						
Hexachloroethane	BRL		µg/l	5.00						
Indeno (1,2,3-cd) pyrene	BRL		µg/l	5.00						
Isophorone	BRL		µg/l	5.00						
2-Methylnaphthalene	BRL		µg/l	5.00						
2-Methylphenol	BRL		µg/l	5.00						
3,4-Methylphenol	BRL		µg/l	10.0						
Naphthalene	BRL		µg/l	5.00						
2-Nitroaniline	BRL		µg/l	5.00						

Semivolatile Organic Compounds by GCMS - Quality Control

Analyte(s)	Result	Flag	Units	*RDL	Spike Level	Source Result	%REC	%REC Limits	RPD	RPD Limit
Batch 5120702 - SW846 3535										
Blank (5120702-BLK1)										
Prepared: 13-Dec-05 Analyzed: 14-Dec-05										
3-Nitroaniline	BRL		µg/l	5.00						
4-Nitroaniline	BRL		µg/l	5.00						
Nitrobenzene	BRL		µg/l	5.00						
2-Nitrophenol	BRL		µg/l	5.00						
4-Nitrophenol	BRL		µg/l	5.00						
N-Nitrosodimethylamine	BRL		µg/l	5.00						
N-Nitrosodi-n-propylamine	BRL		µg/l	5.00						
N-Nitrosodiphenylamine	BRL		µg/l	5.00						
Pentachlorophenol	BRL		µg/l	5.00						
Phenanthrene	BRL		µg/l	5.00						
Phenol	BRL		µg/l	5.00						
Pyrene	BRL		µg/l	5.00						
Pyridine	BRL		µg/l	5.00						
1,2,4-Trichlorobenzene	BRL		µg/l	5.00						
2,4,5-Trichlorophenol	BRL		µg/l	5.00						
2,4,6-Trichlorophenol	BRL		µg/l	5.00						
Surrogate: 2-Fluorobiphenyl	*83.7*		µg/l		*100*		*83.7*	*30-130*		
Surrogate: 2-Fluorophenol	*74.1*		µg/l		*100*		*74.1*	*15-110*		
Surrogate: Nitrobenzene-d5	*55.5*		µg/l		*100*		*55.5*	*30-130*		
Surrogate: Phenol-d5	*63.6*		µg/l		*100*		*63.6*	*15-110*		
Surrogate: Terphenyl-dl4	*104*		µg/l		*100*		*104*	*30-130*		
Surrogate: 2,4,6-Tribromophenol	*51.5*		µg/l		*100*		*51.5*	*15-110*		
LCS (5120702-BS1)										
Prepared: 13-Dec-05 Analyzed: 14-Dec-05										
Acenaphthene	74.1		µg/l	5.00	100		74.1	40-140		
Acenaphthylene	80.9		µg/l	5.00	100		80.9	40-140		
Aniline	54.9		µg/l	5.00	100		54.9	40-140		
Anthracene	79.7		µg/l	5.00	100		79.7	40-140		
Azobenzene/Diphenyldiazine	74.2		µg/l	5.00	100		74.2	40-140		
Benzidine	47.4		µg/l	5.00	100		47.4	40-140		
Benzo (a) anthracene	77.3		µg/l	5.00	100		77.3	40-140		
Benzo (a) pyrene	77.9		µg/l	5.00	100		77.9	40-140		
Benzo (b) fluoranthene	71.8		µg/l	5.00	100		71.8	40-140		
Benzo (g,h,i) perylene	68.9		µg/l	5.00	100		68.9	40-140		
Benzo (k) fluoranthene	80.7		µg/l	5.00	100		80.7	40-140		
Benzoic acid	50.7		µg/l	5.00	100		50.7	30-130		
Benzyl alcohol	83.6		µg/l	5.00	100		83.6	40-140		
Bis(2-chloroethoxy)methane	84.1		µg/l	5.00	100		84.1	40-140		
Bis(2-chloroethyl)ether	59.9		µg/l	5.00	100		59.9	40-140		
Bis(2-chloroisopropyl)ether	50.6		µg/l	5.00	100		50.6	40-140		
Bis(2-ethylhexyl)phthalate	105		µg/l	5.00	100		105	40-140		
4-Bromophenyl phenyl ether	70.6		µg/l	5.00	100		70.6	40-140		
Butyl benzyl phthalate	101		µg/l	5.00	100		101	40-140		
Carbazole	77.9		µg/l	5.00	100		77.9	0-200		
4-Chloro-3-methylphenol	76.5		µg/l	5.00	100		76.5	30-130		
4-Chloroaniline	58.2		µg/l	5.00	100		58.2	40-140		
2-Chloronaphthalene	75.6		µg/l	5.00	100		75.6	40-140		
2-Chlorophenol	69.3		µg/l	5.00	100		69.3	30-130		
4-Chlorophenyl phenyl ether	76.7		µg/l	5.00	100		76.7	40-140		
Chrysene	81.7		µg/l	5.00	100		81.7	40-140		
Dibenzo (a,h) anthracene	73.3		µg/l	5.00	100		73.3	40-140		
Dibenzofuran	80.0		µg/l	5.00	100		80.0	40-140		
1,2-Dichlorobenzene	63.1		µg/l	5.00	100		63.1	40-140		
1,3-Dichlorobenzene	63.0		µg/l	5.00	100		63.0	40-140		
1,4-Dichlorobenzene	61.6		µg/l	5.00	100		61.6	40-140		

Semivolatile Organic Compounds by GCMS - Quality Control

Analyte(s)	Result	Flag	Units	*RDL	Spike Level	Source Result	%REC	%REC Limits	RPD	RPD Limit
Batch 5120702 - SW846 3535										
LCS (5120702-BS1)										
Prepared: 13-Dec-05 Analyzed: 14-Dec-05										
3,3'-Dichlorobenzidine	56.8		µg/l	5.00	100		56.8	40-140		
2,4-Dichlorophenol	71.6		µg/l	5.00	100		71.6	30-130		
Diethyl phthalate	86.4		µg/l	5.00	100		86.4	40-140		
Dimethyl phthalate	78.1		µg/l	5.00	100		78.1	40-140		
2,4-Dimethylphenol	79.1		µg/l	5.00	100		79.1	30-130		
Di-n-butyl phthalate	90.7		µg/l	5.00	100		90.7	40-140		
4,6-Dinitro-2-methylphenol	48.8		µg/l	5.00	100		48.8	30-130		
2,4-Dinitrophenol	48.8		µg/l	5.00	100		48.8	30-130		
2,4-Dinitrotoluene	52.2		µg/l	5.00	100		52.2	40-140		
2,6-Dinitrotoluene	75.6		µg/l	5.00	100		75.6	40-140		
Di-n-octyl phthalate	113		µg/l	5.00	100		113	40-140		
Fluoranthene	73.9		µg/l	5.00	100		73.9	40-140		
Fluorene	80.8		µg/l	5.00	100		80.8	40-140		
Hexachlorobenzene	70.9		µg/l	5.00	100		70.9	40-140		
Hexachlorobutadiene	70.6		µg/l	5.00	100		70.6	40-140		
Hexachlorocyclopentadiene	71.7		µg/l	5.00	100		71.7	40-140		
Hexachloroethane	63.5		µg/l	5.00	100		63.5	40-140		
Indeno (1,2,3-cd) pyrene	67.4		µg/l	5.00	100		67.4	40-140		
Isophorone	84.3		µg/l	5.00	100		84.3	40-140		
2-Methylnaphthalene	76.8		µg/l	5.00	100		76.8	40-140		
2-Methylphenol	70.7		µg/l	5.00	100		70.7	40-140		
3,4-Methylphenol	37.2	QC-1	µg/l	10.0	100		37.2	40-140		
Naphthalene	79.5		µg/l	5.00	100		79.5	40-140		
2-Nitroaniline	47.6		µg/l	5.00	100		47.6	40-140		
3-Nitroaniline	43.9		µg/l	5.00	100		43.9	40-140		
4-Nitroaniline	47.5		µg/l	5.00	100		47.5	40-140		
Nitrobenzene	66.0		µg/l	5.00	100		66.0	40-140		
2-Nitrophenol	53.3		µg/l	5.00	100		53.3	30-130		
4-Nitrophenol	45.4		µg/l	5.00	100		45.4	30-130		
N-Nitrosodimethylamine	18.6	QC-1	µg/l	5.00	100		18.6	40-140		
N-Nitrosodi-n-propylamine	72.2		µg/l	5.00	100		72.2	40-140		
N-Nitrosodiphenylamine	87.3		µg/l	5.00	100		87.3	40-140		
Pentachlorophenol	75.4		µg/l	5.00	100		75.4	30-130		
Phenanthrene	75.5		µg/l	5.00	100		75.5	40-140		
Phenol	69.8		µg/l	5.00	100		69.8	30-130		
Pyrene	90.5		µg/l	5.00	100		90.5	40-140		
Pyridine	28.1	QC-1	µg/l	5.00	100		28.1	40-140		
1,2,4-Trichlorobenzene	70.9		µg/l	5.00	100		70.9	40-140		
2,4,5-Trichlorophenol	74.3		µg/l	5.00	100		74.3	30-130		
2,4,6-Trichlorophenol	78.9		µg/l	5.00	100		78.9	30-130		
Surrogate: 2-Fluorobiphenyl	*68.0*		µg/l		*100*		*68.0*	*30-130*		
Surrogate: 2-Fluorophenol	*48.9*		µg/l		*100*		*48.9*	*15-110*		
Surrogate: Nitrobenzene-d5	*47.0*		µg/l		*100*		*47.0*	*30-130*		
Surrogate: Phenol-d5	*46.1*		µg/l		*100*		*46.1*	*15-110*		
Surrogate: Terphenyl-dl4	*84.9*		µg/l		*100*		*84.9*	*30-130*		
Surrogate: 2,4,6-Tribromophenol	*59.1*		µg/l		*100*		*59.1*	*15-110*		

Total Metals by EPA 200 Series Methods - Quality Control

Analyte(s)	Result	Flag	Units	*RDL	Spike Level	Source Result	%REC	%REC Limits	RPD	RPD Limit
Batch 5120978 - EPA 200 Series										
Blank (5120978-BLK1)										
Prepared: 19-Dec-05 Analyzed: 20-Dec-05										
Iron	BRL		mg/l	0.0150						
Selenium	BRL		mg/l	0.0150						
Antimony	BRL		mg/l	0.0120						
Nickel	BRL		mg/l	0.0050						
Zinc	BRL		mg/l	0.0050						
Lead	BRL		mg/l	0.0075						
Arsenic	BRL		mg/l	0.0080						
Cadmium	BRL		mg/l	0.0025						
Chromium	BRL		mg/l	0.0050						
Copper	BRL		mg/l	0.0050						
Silver	BRL		mg/l	0.0100						
LCS (5120978-BS1)										
Prepared: 19-Dec-05 Analyzed: 20-Dec-05										
Iron	0.217		mg/l	0.0050	0.200		108	85-115		
Zinc	0.200		mg/l	0.0050	0.200		100	85-115		
Selenium	0.190		mg/l	0.0150	0.200		95.0	85-115		
Antimony	0.187		mg/l	0.0120	0.200		93.5	85-115		
Lead	0.201		mg/l	0.0075	0.200		100	85-115		
Nickel	0.197		mg/l	0.0050	0.200		98.5	85-115		
Cadmium	0.190		mg/l	0.0025	0.200		95.0	85-115		
Arsenic	0.192		mg/l	0.0080	0.200		96.0	85-115		
Copper	0.188		mg/l	0.0050	0.200		94.0	85-115		
Chromium	0.182		mg/l	0.0050	0.200		91.0	85-115		
Silver	0.0946		mg/l	0.0100	0.100		94.6	85-115		
Duplicate (5120978-DUP1) **Source: SA38246-01**										
Prepared: 19-Dec-05 Analyzed: 20-Dec-05										
Lead	0.0128		mg/l	0.0075		0.0120			6.45	20
Zinc	0.0172		mg/l	0.0050		0.0168			2.35	20
Antimony	BRL		mg/l	0.0120		BRL				20
Nickel	BRL		mg/l	0.0050		0.0042			4.65	20
Selenium	BRL		mg/l	0.0150		BRL				20
Iron	3.53		mg/l	0.0050		3.41			3.46	20
Cadmium	BRL		mg/l	0.0025		BRL				20
Arsenic	BRL		mg/l	0.0080		BRL				20
Copper	0.0053		mg/l	0.0050		0.0046			14.1	20
Silver	BRL		mg/l	0.0100		BRL				20
Chromium	0.0050		mg/l	0.0050		0.0052			3.92	20
Matrix Spike (5120978-MS1) **Source: SA38305-01**										
Prepared: 19-Dec-05 Analyzed: 20-Dec-05										
Lead	0.192		mg/l	0.0075	0.200	BRL	96.0	70-130		
Nickel	0.190		mg/l	0.0050	0.200	BRL	95.0	70-130		
Antimony	0.190		mg/l	0.0120	0.200	BRL	95.0	70-130		
Selenium	0.189		mg/l	0.0150	0.200	BRL	94.5	70-130		
Iron	0.284		mg/l	0.0050	0.200	0.0859	99.0	70-130		
Zinc	0.202		mg/l	0.0050	0.200	0.0041	99.0	70-130		
Silver	0.0940		mg/l	0.0100	0.100	BRL	94.0	70-130		
Chromium	0.183		mg/l	0.0050	0.200	BRL	91.5	70-130		
Copper	0.191		mg/l	0.0050	0.200	BRL	95.5	70-130		
Arsenic	0.194		mg/l	0.0080	0.200	BRL	97.0	70-130		
Cadmium	0.184		mg/l	0.0025	0.200	BRL	92.0	70-130		
Matrix Spike Dup (5120978-MSD1) **Source: SA38305-01**										
Prepared: 19-Dec-05 Analyzed: 20-Dec-05										

Total Metals by EPA 200 Series Methods - Quality Control

Analyte(s)	Result	Flag	Units	*RDL	Spike Level	Source Result	%REC	%REC Limits	RPD	RPD Limit
Batch 5120978 - EPA 200 Series										
Matrix Spike Dup (5120978-MSD1) **Source: SA38305-01**										
Prepared: 19-Dec-05 Analyzed: 20-Dec-05										
Selenium	0.192		mg/l	0.0150	0.200	BRL	96.0	70-130	1.57	20
Antimony	0.190		mg/l	0.0120	0.200	BRL	95.0	70-130	0.00	20
Iron	0.269		mg/l	0.0050	0.200	0.0859	91.5	70-130	5.42	20
Zinc	0.203		mg/l	0.0050	0.200	0.0041	99.4	70-130	0.494	20
Lead	0.193		mg/l	0.0075	0.200	BRL	96.5	70-130	0.519	20
Nickel	0.192		mg/l	0.0050	0.200	BRL	96.0	70-130	1.05	20
Copper	0.192		mg/l	0.0050	0.200	BRL	96.0	70-130	0.522	20
Silver	0.0936		mg/l	0.0100	0.100	BRL	93.6	70-130	0.426	20
Chromium	0.186		mg/l	0.0050	0.200	BRL	93.0	70-130	1.63	20
Arsenic	0.195		mg/l	0.0080	0.200	BRL	97.5	70-130	0.514	20
Cadmium	0.186		mg/l	0.0025	0.200	BRL	93.0	70-130	1.08	20
Post Spike (5120978-PS1) **Source: SA38305-01**										
Prepared: 19-Dec-05 Analyzed: 20-Dec-05										
Lead	0.175		mg/l	0.0075	0.200	BRL	87.5	85-115		
Nickel	0.174		mg/l	0.0050	0.200	BRL	87.0	85-115		
Zinc	0.183		mg/l	0.0050	0.200	0.0041	89.4	85-115		
Selenium	0.175		mg/l	0.0150	0.200	BRL	87.5	85-115		
Copper	0.176		mg/l	0.0050	0.200	BRL	88.0	85-115		
Arsenic	0.177		mg/l	0.0080	0.200	BRL	88.5	85-115		
Batch 5120979 - EPA 200 Series										
Blank (5120979-BLK1)										
Prepared: 19-Dec-05 Analyzed: 20-Dec-05										
Mercury	BRL		mg/l	0.00020						
LCS (5120979-BS1)										
Prepared: 19-Dec-05 Analyzed: 20-Dec-05										
Mercury	0.00241		mg/l	0.00020	0.00250		96.4	80-120		
Duplicate (5120979-DUP1) **Source: SA38305-02**										
Prepared: 19-Dec-05 Analyzed: 20-Dec-05										
Mercury	BRL		mg/l	0.00020		BRL				20
Matrix Spike (5120979-MS1) **Source: SA38305-03**										
Prepared: 19-Dec-05 Analyzed: 20-Dec-05										
Mercury	0.00240		mg/l	0.00020	0.00250	0.00008	92.8	75-125		
Matrix Spike Dup (5120979-MSD1) **Source: SA38305-03**										
Prepared: 19-Dec-05 Analyzed: 20-Dec-05										
Mercury	0.00250		mg/l	0.00020	0.00250	0.00008	96.8	75-125	4.08	20
Post Spike (5120979-PS1) **Source: SA38305-03**										
Prepared: 19-Dec-05 Analyzed: 20-Dec-05										
Mercury	0.00224		mg/l	0.00020	0.00250	0.00008	86.4	0-200		

General Chemistry Parameters - Quality Control

Analyte(s)	Result	Flag	Units	*RDL	Spike Level	Source Result	%REC	%REC Limits	RPD	RPD Limit
Batch 5120655 - General Preparation										
Blank (5120655-BLK1)										
Prepared & Analyzed: 12-Dec-05										
Hexavalent Chromium	BRL		mg/l	0.005						
LCS (5120655-BS1)										
Prepared & Analyzed: 12-Dec-05										
Hexavalent Chromium	0.049		mg/l	0.005	0.0500		98.0	90-110		
Duplicate (5120655-DUP1) **Source: SA38281-01**										
Prepared & Analyzed: 12-Dec-05										
Hexavalent Chromium	BRL		mg/l	0.005		0.002			0.00	20
Matrix Spike (5120655-MS1) **Source: SA38281-01**										
Prepared & Analyzed: 12-Dec-05										
Hexavalent Chromium	0.053		mg/l	0.005	0.0500	0.002	102	80-120		
Reference (5120655-SRM1)										
Prepared & Analyzed: 12-Dec-05										
Hexavalent Chromium	0.022		mg/l	0.005	0.0250		88.0	85-115		
Batch 5120881 - General Preparation										
Blank (5120881-BLK1)										
Prepared & Analyzed: 15-Dec-05										
Cyanide (total)	BRL		mg/l	0.0100						
LCS (5120881-BS1)										
Prepared & Analyzed: 15-Dec-05										
Cyanide (total)	0.315		mg/l	0.0100	0.300		105	90-110		
LCS (5120881-BS2)										
Prepared & Analyzed: 15-Dec-05										
Cyanide (total)	0.316		mg/l	0.0100	0.300		105	90-110		
Matrix Spike (5120881-MS1) **Source: SA38251-03**										
Prepared & Analyzed: 15-Dec-05										
Cyanide (total)	0.306		mg/l	0.0100	0.300	BRL	102	75-125		
Matrix Spike Dup (5120881-MSD1) **Source: SA38251-03**										
Prepared & Analyzed: 15-Dec-05										
Cyanide (total)	0.465	QM-05	mg/l	0.0100	0.300	BRL	155	75-125	41.2	20
Reference (5120881-SRM1)										
Prepared & Analyzed: 15-Dec-05										
Cyanide (total)	0.138		mg/l	0.0100	0.145		95.2	77.2-128		
Batch 5120978 - EPA 200 Series										
Blank (5120978-BLK1)										
Prepared: 19-Dec-05 Analyzed: 20-Dec-05										
Trivalent Chromium	BRL		mg/l	0.0050						
Duplicate (5120978-DUP1) **Source: SA38246-01**										
Prepared: 19-Dec-05 Analyzed: 20-Dec-05										
Trivalent Chromium	BRL		mg/l	0.0050		0.0052				20

Notes and Definitions

O-09	This sample was analyzed outside the EPA recommended holding time per client request
QC-1	Analyte out of acceptance range.
QM-05	The spike recovery was outside acceptance limits for the MS, MSD and/or PS due to matrix interference. The LCS and/or LCSD were within acceptance limits showing that the laboratory is in control and the data is acceptable
QR-02	The RPD result exceeded the QC control limits; however, both percent recoveries were acceptable. Sample results for the QC batch were accepted based on percent recoveries and completeness of QC data.
QR-05	RPD out of acceptance range.
BRL	Below Reporting Limit - Analyte NOT DETECTED at or above the reporting limit
dry	Sample results reported on a dry weight basis
NR	Not Reported
RPD	Relative Percent Difference

A plus sign (+) in the Method Reference column indicates the method is not accredited by NELAC

Interpretation of Total Petroleum Hydrocarbon Report

Petroleum identification is determined by comparing the GC fingerprint obtained from the sample with a library of GC fingerprints obtained from analyses of various petroleum products. Possible match categories are as follows:

Gasoline - includes regular, unleaded, premium, etc.
Fuel Oil #2 - includes home heating oil, #2 fuel oil, and diesel
Fuel Oil #4 - includes #4 fuel oil
Fuel Oil #6 - includes #6 fuel oil and bunker "C" oil
Motor Oil - includes virgin and waste automobile oil
Ligroin - includes mineral spirits, petroleum naphtha, vm&p naphtha
Aviation Fuel - includes kerosene, Jet A and JP-4
Other Oil - includes lubricating and cutting oil, and silicon oil

At times, the unidentified petroleum product is quantified using a calibration that most closely approximates the distribution of compounds in the sample. When this occurs, the result is qualified as *TPH (Calculated as).

Laboratory Control Sample (LCS): A known matrix spiked with compound(s) representative of the target analytes, which is used to document laboratory performance.

Matrix Duplicate: An intra-laboratory split sample which is used to document the precision of a method in a given sample matrix

Matrix Spike: An aliquot of a sample spiked with a known concentration of target analyte(s). The spiking occurs prior to sample preparation and analysis. A matrix spike is used to document the bias of a method in a given sample matrix

Method Blank: An analyte-free matrix to which all reagents are added in the same volumes or proportions as used in sample processing. The method blank should be carried through the complete sample preparation and analytical procedure The method blank is used to document contamination resulting from the analytical process

Method Detection Limit (MDL): The minimum concentration of a substance that can be measured and reported with99% confidence that the analyte concentration is greater than zero and is determined from analysis of a sample in a given matrix type containing the analyte.

Reportable Detection Limit (RDL): The lowest concentration that can be reliably achieved within specified limits of precision and accuracy during routine laboratory operating conditions For many analytes the RDL analyte concentration is selected as the lowest non-zero standard in the calibration curve. While the RDL is approximately 5 to 10 times the MDL, the RDL for each sample takes into account the sample volume/weight, extract/digestate volume, cleanup procedures and, if applicable, dry weight correction Sample RDLs are highly matrix-dependent.

Surrogate: An organic compound which is similar to the target analyte(s) in chemical composition and behavior in the analytical process, but which is not normally found in environmental samples These compounds are spiked into all blanks, standards, and

Validated by:
Hanibal C. Tayeh, Ph.D.
Nicole Brown

The following outlines the condition of all EPH samples contained within this report upon laboratory receipt

Matrix	☑ Aqueous	☐ Soil	☐ Sediment	☐ Other
Containers	☑ Satisfactory	☐ Broken	☐ Leaking	
Aqueous Preservative	☐ N/A	☑ pH≤2	☐ pH>2	☐ pH adjusted to <2 in lab Comment:
Temperature	☐ Received on ice	☑ Received at 4 ± 2 °C	☐ Other:	°C

Were all QA/QC procedures followed as required by the EPH method? Yes ✓ No _____
Were any significant modifications made to the EPH method as specified in Section 11.3? No
Were all performance/acceptance standards for required QA/QC procedures achieved? Yes ✓ No _____

I attest that based upon my inquiry of those individuals immediately responsible for obtaining the information, the material contained in this report is, to the best of my knowledge and belief, accurate and complete

Authorized by:

Hanibal C. Tayeh, Ph.D.
President/Laboratory Director

SA 38246

SPECTRUM ANALYTICAL, INC.
Featuring
HANIBAL TECHNOLOGY

CHAIN OF CUSTODY RECORD

Page 1 of 1

Special Handling:
☒ Standard TAT - 7 to 10 business days
☐ Rush TAT - Date Needed: _____
· All TATs subject to laboratory approval. Min. 24-hour notification needed for rushes.
· Samples disposed of after 60 days unless otherwise instructed.

Report To: Response

Project Mgr.: GSG

Invoice To: WH#5017911 (JH)

P.O. No.: _____ RQN: _____

Project No.: 2003 2871
Site Name: MUNHALL FUEL
Location: WATERTOWN State: MA
Sampler(s): GSG

1=Na_2S2O_3 2=HCl 3=H_2SO_4 4=HNO_3 5=NaOH 6=Ascorbic Acid
7=CH_3OH 8= $NaHSO_4$ 9=_____ 10=_____

DW=Drinking Water GW=Groundwater WW=Wastewater
O=Oil SW= Surface Water SO=Soil SL=Sludge A=Air
X1=_____ X2=_____ X3=_____

G=Grab C=Composite

Lab Id:	Sample Id:	Date:	Time:	Type	Matrix	Preservative	# of VOA Vials	# of Amber Glass	# of Clear Glass	# of Plastic		Total Metals 200.7 + HG	T. Cyanide/TSS	Hex Chromium	TPH 1664	EDB 504.1	VOCs 8260	PCB 608	SVOCs 625	QA Reporting Notes: (check if needed)
38246-01	GW-8NASH	12/7/05	12:00p	G	GW		4	3		3		X	X	X	X	X	X	X	X	PER ATTACHED schedule OF ANALYSIS + EPH
																				Run or let past hold see attached

QA Reporting Notes: (check if needed)
State specific reporting standards
If applicable, please list below.
☐ Provide MCP CAM Report
Were all field QC requirements met as per MADEP CAM Section 2.0?
☐ Yes ☐ No
(Response required for CAM report)

☒ Fax results when available to (508) 795-0910
☐ E-mail to _____
EDD Format _____

Condition upon receipt: ☒ Iced ☐ Ambient ☐ °C

Relinquished by:	Received by:	Date:	Time:
[signature]	[signature]		
[signature]	[signature]	12/9/05	848