RECEIVED
SEP 22 2006
U.S. EPA, Region 1, Mail Room

Lincoln Environmental, Inc.

333 Washington Highway, Smithfield, RI 02917-1915 (401) 232-3353 (401) 232-1130 FAX RI@lincolnenv.com EMAIL
OTHER OFFICE: GLASTONBURY, CT

MAG910263

September 22, 2006

Mr. Victor Alvarez
US Environmental Protection Agency
RGP NOC Processing
Municipal Compliance Unit (CMU)
1 Congress Street, Suite 1100
Boston, Massachusetts 02114-2023

RE: Notice of Intent of Remediation General Permit
Blue Hill Auto Supply
940 Canton Avenue, Milton, MA 02186
Lincoln Project Number 027810

Dear Mr. Alvarez:

Lincoln Environmental, Inc. (Lincoln) has prepared this Notice of Intent for a Remediation General Permit. The permit is being requested to assist the construction dewatering necessary to complete an underground storage tank upgrade at a former MCP-listed site. The contractor wants to be able to discharge treated effluent on or about October 5, 2006. The project is being conducted for the property owner, Blue Hill Auto Supply Realty Trust.

Project Contacts

Lincoln is the environmental consultant for SRS Petroleum. SRS Petroleum is the contractor who will provide the labor and equipment needed to complete the UST upgrade and dewatering. Blue Hill Auto Supply Realty Trust is considered the owner of the project. Below I provide you with the contact information for each of the entities listed above.

Lincoln Environmental
333 George Washington Highway
Smithfield, RI 02917
Ph: (401)-232-3353 ext. 142
Fax: (401)-232-1130
Email: ksullivan@lincolnenv.com
Contact: Keith Sullivan

SRS Petroleum, LLC
59A Elm Street
Goffstown, NH 03045
Ph: (603) 660-1654
Fax: (508) 807-0160
Contact: Andy Bissonette

Blue Hill Auto Supply Realty Trust
940 Canton Avenue
Milton, MA 02186
Ph: (617) 698-1111
Fax: (617) 298-0199
Email: bluehillpower@yahoo.com
Contact: Steve Wells

Groundwater Data

On September 11, 2006, Lincoln Environmental collected a groundwater sample from an existing monitoring well located 10 feet from the existing tanks. The groundwater data indicates very low levels of TPH (450 ug/L) and MTBE (3 ug/L) are present. Total lead, zinc and iron were reported at 50, 180, and 10,000 ug/L. Dissolved lead, zinc and iron were analyzed on 9/20/06 resulting in concentrations of 2.4, 55, 4,900 ug/L. None of the dissolved metals in the influent will have the potential to exceed Appendix III limits using a dilution ranging from zero to five. Bag filters are expected to adequately filter out particulate metals.

Groundwater Treatment System

The construction dewatering and treatment system employed by SRS has been designed for a continuous throughput of approximately 50 gallons per minute. The system is designed to treat water contaminated with volatile and semi-volatile petroleum hydrocarbons and suspended solids. The system consists of two pumps, a 21,000 gallon sedimentation tank, (2) bag filters, and (2) 1,000 pound liquid-phase granular activated carbon filters piped in series. If needed (1) 1,000 pound vessel containing greensand will be available for use in a polishing step for the iron.

The first pump transfers water out of the excavation and into the sedimentation tank. The second pump transfers the water out of the sedimentation tank and through two bag filters, the carbon filters, and if needed another bag filter and greensand before the effluent is discharged into a nearby storm drain. Lincoln believes the proposed system is adequate to effectively treat the discharge to meet effluent limitations. The effluent pipe from the groundwater treatment system will be suspended in a storm drain that discharges to the "Pine Tree Brook." The Pine Tree Brook flows into the Neponset River. The Neponset River ultimately discharges into the Dorchester Bay. A schematic diagram of the treatment system is provided on the following page. We have also attached captioned aerial photographs that depict the Milton storm drainage system.

If you have any questions concerning this NOI, please contact me at your earliest opportunity. You attention to this matter is greatly appreciated. My telephone number is (401) 232-3353, extension 142. My cell phone number is 401-265-4778.

Sincerely,
LINCOLN ENVIRONMENTAL, INC.

Keith Sullivan, LSP
Senior Project Manager

Enclosures

cc: Steve Wells
Andy Bissonette
Mass DEP

f:\client files\02474\correspondence\062006 epa noi cover.doc

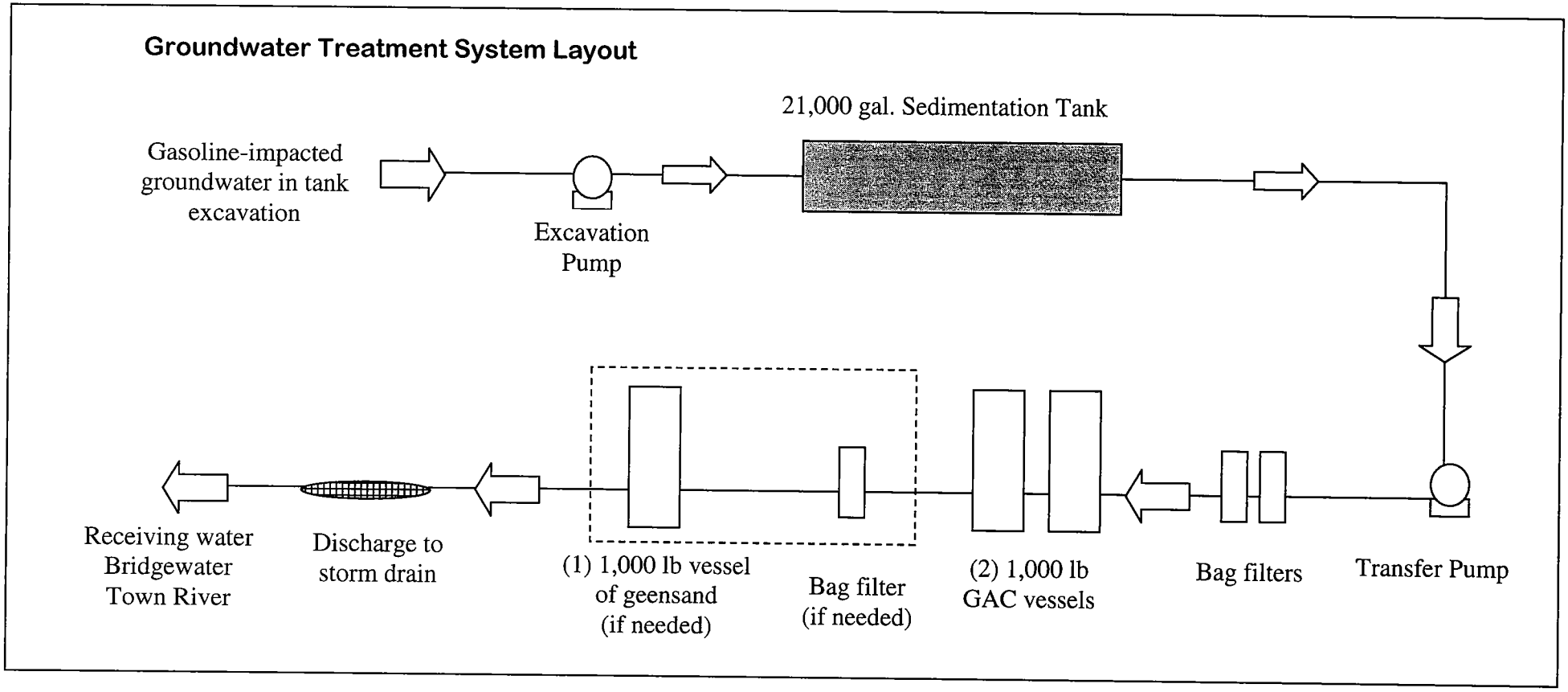
Groundwater Treatment System Layout
21,000 gal. Sedimentation Tank
Gasoline-impacted groundwater in tank excavation
Excavation Pump
Receiving water Bridgewater Town River
Discharge to storm drain
(1) 1,000 lb vessel of geensand (if needed)
Bag filter (if needed)
(2) 1,000 lb GAC vessels
Bag filters
Transfer Pump

NOI Forms

B. Suggested Form for Notice of Intent (NOI) for the Remediation General Permit

1. General site information. Please provide the following information about the site:

a) Name of **facility/site**: Blue Hill Auto Supply, Inc.		**Facility/site** address:		
Location of **facility/site**: longitude: -71°05'42" latitude: 42°14'38"	Facility SIC code(s): 5541	Street: 940 Canton Avenue		
b) Name of **facility/site owner**: Blue Hill Auto Supply Realty Trust		Town: Milton		
Email address of owner: bluehillpower@yahoo.com		State: Massachusetts	Zip: 02186	County: Norfolk
Telephone no.of facility/site **owner**: (617) 698-1111				
Fax no. of facility/site **owner**: (617) 298-0199		**Owner** is (check one): 1. Federal____ 2. State/Tribal____ 3. Private__X__ 4. other, if so, describe:		
Address of **owner** (if different from site):				
Street:				
Town:	State:	Zip:	County:	
c) Legal name of **operator**: Blue Hill Auto Supply, Inc.	**Operator** telephone no: (617) 698-1111			
	Operator fax no.: (617) 298-0199	**Operator** email: bluehillpower@yahoo.com		
Operator contact name and title: Steve Wells				

Address of operator (if different from owner):	Street:		
Town:	State:	Zip:	County:

d) Check "yes" or "no" for the following:
1. Has a prior NPDES permit exclusion been granted for the discharge? Yes___ No_X_, if "yes," number:
2. Has a prior NPDES application (Form 1 & 2C) ever been filed for the discharge? Yes___ No_X_, if "yes," date and tracking #:
3. Is the discharge a "new discharge"as defined by 40 CFR 122.2? Yes_X_ No___
4. For sites in Massachusetts, is the discharge covered under the MA Contingency Plan (MCP) and exempt from state permitting? Yes_X_ No__

e) Is site/facility subject to any State permitting or other action which is causing the generation of discharge? Yes___ No_X_
If "yes," please list:
1. site identification # assigned by the state of NH or MA:
2. permit or license # assigned:
3. state agency contact information: name, location, and telephone number:

f) Is the site/facility covered by any other EPA permit, including:
1. multi-sector storm water general permit? Y___ N_X_, if Y, number:
2. phase I or II construction storm water general permit? Y___ N_X_, if Y, number:
3. individual NPDES permit? Y___ N_X_, if Y, number:
4. any other water quality related permit? Y___ N_X_, if Y, number:

2. Discharge information. Please provide information about the discharge, (attaching additional sheets as needed) including:

a) Describe the discharge activities for which the owner/applicant is seeking coverage:

Construction dewatering and treatment by GAC during an underground storage tank upgrade project.

b) Provide the following information about each discharge:	1) Number of discharge points: one	2) What is the **maximum** and **average flow rate** of discharge (in cubic feet per second, ft^3/s)? Max. flow 0.0115 Average flow 0.0557 Is maximum flow a **design value**? Y_X_ N___ For average flow, include the units and appropriate notation if this value is a design value or estimate if not available. Average flow is a design rate of 0.0557 cu ft/sec. (25 GPM)

3) Latitude and longitude of each discharge within 100 feet: pt.1:long.-71°05'39" lat.42°14'42"; pt.2: long._____ lat._____; pt.3: long._____ lat._____; pt.4:long._____ lat._____; pt.5: long._____ lat._____; pt.6:long._____ lat._____; pt.7: long._____ lat._____; pt.8:long._____ lat._____; etc.

4) If hydrostatic testing, total volume of the discharge (gals):	5) Is the discharge intermittent X or seasonal ____? Is discharge ongoing Yes ____ No X ?
c) Expected dates of discharge (mm/dd/yy): start 10/5/06 end 10/12/06	
d) Please attach a line drawing or flow schematic showing water flow through the facility including: 1. sources of intake water, 2. contributing flow from the operation, 3. treatment units, and 4. discharge points and receiving waters(s).	

(Please refer to the cover letter for system schematic.)

3. Contaminant information. In order to complete this section, the applicant will need to take a minimum of one sample of the untreated water and have it analyzed for **all** of the parameters listed in Appendix III. Historical data, (i.e., data taken no more than 2 years prior to the effective date of the permit) may be used if obtained pursuant to: i. Massachusetts' regulations 310 CMR 40.0000, the Massachusetts Contingency Plan ("Chapter 21E"); ii. New Hampshire's Title 50 RSA 485-A: Water Pollution and Waste Disposal or Title 50 RSA 485-C: Groundwater Protection Act; or iii. an EPA permit exclusion letter issued pursuant to 40 CFR 122.3, provided the data was analyzed with test methods that meet the requirements of this permit. Otherwise, a new sample shall be taken and analyzed.

a) Based on the analysis of the sample(s) of the untreated influent, the applicant must check the box of the sub-categories that the potential discharge falls within.

Gasoline Only **X**	VOC Only	Primarily Metals	Urban Fill Sites	Contaminated Sumps	Mixed Contaminants	Aquifer Testing
Fuel Oils (and Other Oils) only	VOC with Other Contaminants	Petroleum with Other Contaminants	Listed Contaminated Sites	Contaminated Dredge Condensates	Hydrostatic Testing of Pipelines/Tanks	Well Development or Rehabilitation

b) Based on the analysis of the untreated influent, the applicant must indicate whether each listed chemical is **believed present** or **believed absent** in the potential discharge. Attach additional sheets as needed.

PARAMETER	Believe Absent	Believe Present	# of Samples (1 minimum)	Type of Sample (e.g., grab)	Analytical Method Used (method #)	Minimum Level (ML) of Test Method	Maximum daily value		Avg. daily value	
							concentration (ug/l)	mass (kg)	concentration (ug/l)	mass (kg)
1. Total Suspended Solids		X	one	grab	EPA 160.2	2.0 mg/l	**3,400,000**	**309**	**3,400,000**	**154.4**
2. Total Residual Chlorine	X		one	grab	EPA 330.5	2.5 mg/l	ND			
3. Total Petroleum Hydrocarbons		X	one	grab	8100M	100	**450**	**0.04**	**450**	**0.02**
4. Cyanide	X		one	grab	EPA 335.2	0.01 mg/l	ND			
5. Benzene		X	one	grab	8260B	1.0 ug/l	ND			
6. Toluene		X	one	grab	8260B	1.0 ug/l	ND			
7. Ethylbenzene		X	one	grab	8260B	1.0 ug/l	ND			
8. (m,p,o) Xylenes		X	one	grab	8260B	1.0 ug/l	ND			
9. Total BTEX[4]		X	one	grab	8260B	1.0 ug/l	ND			

[4] BTEX = Sum of Benzene, Toluene, Ethylbenzene, total Xylenes.

PARAMETER	Believe Absent	Believe Present	# of Samples (1 min-imum)	Type of Sample (e.g., grab)	Analytical Method Used (method #)	Minimum Level (ML) of Test Method	Maximum daily value		Avg. daily value	
							concentration (ug/l)	mass (kg)	concentration (ug/l)	mass (kg)
10. Ethylene Dibromide (1,2- Dibromo-methane)	X		one	grab	8260B	1.0 ug/l	ND			
11. Methyl-tert-Butyl Ether (MtBE)		X	one	grab	8260B	2.0 ug/l	**3**	**0.0003**	**3**	**0.0001**
12. tert-Butyl Alcohol (TBA)	X		one	grab	8260B	10.0 ug/l	ND			
13. tert-Amyl Methyl Ether (TAME)	X		one	grab	8260B	10.0 ug/l	ND			
14. Naphthalene	X		one	grab	EPA 8270C	1.0 ug/L	ND			
15. Carbon Tetra-chloride	X		one	grab	8260B	1.0 ug/l	ND			
16. 1,4 Dichlorobenzene	X		one	grab	8260B	1.0 ug/l	ND			
17. 1,2 Dichlorobenzene	X		one	grab	8260B	1.0 ug/l	ND			
18. 1,3 Dichlorobenzene	X		one	grab	8260B	1.0 ug/l	ND			
19. 1,1 Dichloroethane	X		one	grab	8260B	1.0 ug/l	ND			
20. 1,2 Dichloroethane	X		one	grab	8260B	1.0 ug/l	ND			
21. 1,1 Dichloroethylene	X		one	grab	8260B	1.0 ug/l	ND			
22. cis-1,2 Dichloro-ethylene	X		one	grab	8260B	1.0 ug/l	ND			
23. Dichloromethane (Methylene Chloride)	X		one	grab	8260B	5.0 ug/l	ND			
24. Tetrachloroethylene	X		one	grab	8260B	1.0 ug/l	ND			

PARAMETER	Believe Absent	Believe Present	# of Samples (1 min-imum)	Type of Sample (e.g., grab)	Analytical Method Used (method #)	Minimum Level (ML) of Test Method	Maximum daily value		Avg. daily Value	
							concentration (ug/l)	mass (kg)	concentration (ug/l)	mass (kg)
25. 1,1,1 Trichloroethane	X		one	grab	8260B	1.0 ug/l	ND			
26. 1,1,2 Trichloroethane	X		one	grab	8260B	1.0 ug/l	ND			
27. Trichloroethylene	X		one	grab	8260B	1.0 ug/l	ND			
28. Vinyl Chloride	X		one	grab	8260B	1.0 ug/l	ND			
29. Acetone	X		one	grab	8260B	10 ug/l	ND			
30. 1,4 Dioxane	X		one	grab	8260B	10 ug/l	ND			
31. Total Phenols	X		one	grab	8270C	10 ug/l	ND			
32. Pentachlorophenol	X		one	grab	8270C	10 ug/l	ND			
33. Total Phthalates [5] (Phthalate esthers)	X		one	grab	8270C	10 ug/l	ND			
34. Bis (2-Ethylhexyl) Phthalate [Di-(ethylhexyl) Phthalate]	X		one	grab	8270C	10 ug/l	ND			
35. Total Group I Polycyclic Aromatic Hydrocarbons (PAH)	X		one	grab	8270C	10 ug/l	ND			
a. Benzo(a) Anthracene	X		one	grab	8270C	10 ug/l	ND			
b. Benzo(a) Pyrene	X		one	grab	8270C	10 ug/l	ND			
c. Benzo(b)Fluoranthene	X		one	grab	8270C	10 ug/l	ND			
d. Benzo(k) Fluoranthene	X		one	grab	8270C	10 ug/l	ND			
e. Chrysene	X		one	grab	8270C	10 ug/l	ND			

[5] The sum of individual phthalate compounds.

PARAMETER	Believe Absent	Believe Present	# of Samples (1 minimum)	Type of Sample (e.g., grab)	Analytical Method Used (method #)	Minimum Level (ML) of Test Method	Maximum daily value		Average daily value	
							concentration (ug/l)	mass (kg)	concentration (ug/l)	mass (kg)
f. Dibenzo(a,h) anthracene	X		one	grab	8270C	10 ug/l	ND			
g. Indeno(1,2,3-cd) Pyrene	X		one	grab	8270C	10 ug/l	ND			
36. Total Group II Polycyclic Aromatic Hydrocarbons (PAH)	X		one	grab	8270C	10 ug/l	ND			
h. Acenaphthene	X		one	grab	8270C	10 ug/l	ND			
i. Acenaphthylene	X		one	grab	8270C	10 ug/l	ND			
j. Anthracene	X		one	grab	8270C	10 ug/l	ND			
k. Benzo(ghi) Perylene	X		one	grab	8270C	10 ug/l	ND			
l. Fluoranthene	X		one	grab	8270C	10 ug/l	ND			
m. Fluorene	X		one	grab	8270C	10 ug/l	ND			
n. Naphthalene-	X		one	grab	8270C	10 ug/l	ND			
o. Phenanthrene	X		one	grab	8270C	10 ug/l	ND			
p. Pyrene	X		one	grab	8270C	10 ug/l	ND			
37. Total Polychlorinated Biphenyls (PCBs)	X		one	grab	SW 8082	1.0 ug/l	ND			
38. Antimony	X		one	grab	EPA 200.7	100 ug/l	ND			
39. Arsenic	X		one	grab	EPA 200.7	100 ug/l	ND			
40. Cadmium	X		one	grab	EPA 200.7	0.2 ug/l	ND			
41. Chromium III	X		one	grab	EPA 200.7	30.0 ug/l	ND			
42. Chromium VI	X		one	grab	SM3500 CR-D	20.0 ug/l	ND			

PARAMETER	Believe Absent	Believe Present	# of Samples (1 min-imum)	Type of Sample (e.g., grab)	Analytical Method Used (method #)	Minimum Level (ML) of Test Method	Maximum daily value		Avg. daily value	
							concentration (ug/l)	mass (kg)	concentration (ug/l)	mass (kg)
43. Copper	X		one	grab	EPA 200.7	50 ug/L	ND			
44. Lead		X	one	grab	EPA 200.9	2.0 ug/L	**2.4**	**0.00021**	**2.4**	**0.0001**
45. Mercury	X		one	grab	EPA 245.1	0.5 ug/L	ND			
46. Nickel	X		one	grab	EPA 200.7	20 ug/L	ND			
47. Selenium	X		one	grab	EPA 200.7	200 ug/L	ND			
48. Silver	X		one	grab	EPA 200.9	1.0 ug/L	ND			
49. Zinc		X	one	grab	EPA 200.7	20 ug/L	**55**	**0.0049**	**55**	**0.0024**
50. Iron		X	one	grab	EPA 200.7	50 ug/L	**4,900**	**0.445**	**4,900**	**0.222**
Other (describe): See attachments										

c) For discharges where **metals** are believed present, please fill out the following:

Step 1: Do any of the metals in the influent have a **reasonable potential** to exceed the effluent limits in Appendix III (i.e., the limits set at zero to five dilutions)? Y___ N X	If yes, which metals?
Step 2: For any metals which have **reasonable potential** to exceed the **Appendix III** limits, calculate the **dilution factor (DF)** using the formula in Part I.A.3.c) (step 2) of the NOI instructions or as determined by the State prior to the submission of this NOI. What is the dilution factor for applicable metals? Metals:_____ DF: _____	Look up the limit calculated at the corresponding dilution factor in **Appendix IV.** Do any of the metals in the **influent** have the potential to exceed the corresponding **effluent** limits in Appendix IV (i.e., is the influent concentration above the limit set at the calculated dilution factor)? Y X N___ If "Yes," list which metals:

4. Treatment system information. Please describe the treatment system using separate sheets as necessary, including:

a) A description of the treatment system, including a schematic of the proposed or existing treatment system:

The treatment system consists of a flyght pump, a 21,000 gallon sedimentation tank, a transfer pump, (2) P2 bag filters, and (2) 1,000 lb. carbon vessels. A schematic diagram is attached to our cover letter.

b) Identify each applicable treatment unit (check all that apply):	Frac. tank X	Air stripper	Oil/water separator	Equalization tanks	Bag filter X	GAC filter X
	Chlorination	Dechlorination	Other (please describe):			

c) Proposed **average** and **maximum flow rates** (gallons per minute) for the discharge and the **design flow rate**(s) (gallons per minute) of the treatment system:
Average flow rate of discharge 25 GPM Maximum flow rate of treatment system 50 GPM Design flow rate of treatment system 50 GPM

d) A description of chemical additives being used or planned to be used (attach MSDS sheets):

None proposed

5. Receiving surface water(s). Please provide information about the receiving water(s), using separate sheets as necessary:

a) Identify the discharge pathway:	Direct____	Within facility__	Storm drain_X_	River/brook_X_	Wetlands____	Other (describe):

b) Provide a narrative description of the discharge pathway, including the name(s) of the receiving waters:

The treatment system will discharge through a 2-inch hose to a Milton stormdrain located in front of the Site building. The storm drain discharges to the Pine Tree Brook, which is a tributary to the Neponsett River, which ultimately discharges to Dorchester Bay.

c) Attach a detailed map(s) indicating the site location and location of the outfall to the receiving water:
1. For multiple discharges, number the discharges sequentially.
2. For indirect dischargers, indicate the location of the discharge to the indirect conveyance and the discharge to surface water
The map should also include the location and distance to the nearest sanitary sewer as well as the locus of nearby sensitive receptors (based on USGS topographical mapping), such as surface waters, drinking water supplies, and wetland areas.

d) Provide the state water quality classification of the receiving water Class B,

e) Provide the reported or calculated seven day-ten year low flow (7Q10) of the receiving water 2.97 * cfs
Please attach any calculation sheets used to support stream flow and dilution calculations.

f) Is the receiving water a listed 303(d) water quality impaired or limited water? Yes X No____ If yes, for which pollutant(s)?

Is there a TMDL? Yes____ No X If yes, for which pollutant(s)? This segment is on the 1998 303(d) list of impaired waters for organic enrichment/ low DO, other habitat alterations, and pathogens (MA DEP 1999a).

6. Results of Consultation with Federal Services: Please provide the following information according to requirements of Part I.B.4 and Appendices II and VII.

a) Are any listed threatened or endangered species, or designated critical habitat, in proximity to the discharge? Yes____ No X
Has any consultation with the federal services been completed ? No X or is consultation underway? Yes____ No X
What were the results of the consultation with the U.S. Fish and Wildlife Service and/or National Marine Fisheries Service (~~check~~ one):
a "no jeopardy" opinion? _____ or written concurrence____ on a finding that the discharges are not likely to adversely affect any endangered species or critical habitat?

b) Are any historic properties listed or eligible for listing on the National Register of Historic Places located on the facility or site or in proximity to the discharge?
Yes_____ No X Have any state or tribal historic preservation officer been consulted in this determination (Massachusetts only)? Yes_____ No X

* From USGS Water-Resources Investigations Report 99-4006

7. Supplemental information. :

Please provide any supplemental information. Attach any analytical data used to support the application. Attach any certification(s) required by the general permit.

8. Signature Requirements: The Notice of Intent must be signed by the operator in accordance with the signatory requirements of 40 CFR Section 122.22, including the following certification:

I certify under penalty of law that this document and all attachments were prepared under my direction or supervision in accordance with a system designed to assure that qualified personnel properly gather and evaluate the information submitted. Based on my inquiry of the person or persons who manage the system, or those persons directly responsible for gathering the information, I certify that the information submitted is, to the best of my knowledge and belief, true, accurate, and complete. I certify that I am aware that there are significant penalties for submitting false information, including the possibility of fine and imprisonment for knowing violations.

Facility/Site Name:	BLUE HILL AUTO
Operator signature:	[signature]
Title:	manager
Date:	10/2/2009

Figures

Site Locus Map

Aerial Photographs Showing Drainage System

Site Plan

Site Locus - 940 Canton Ave., Milton, MA

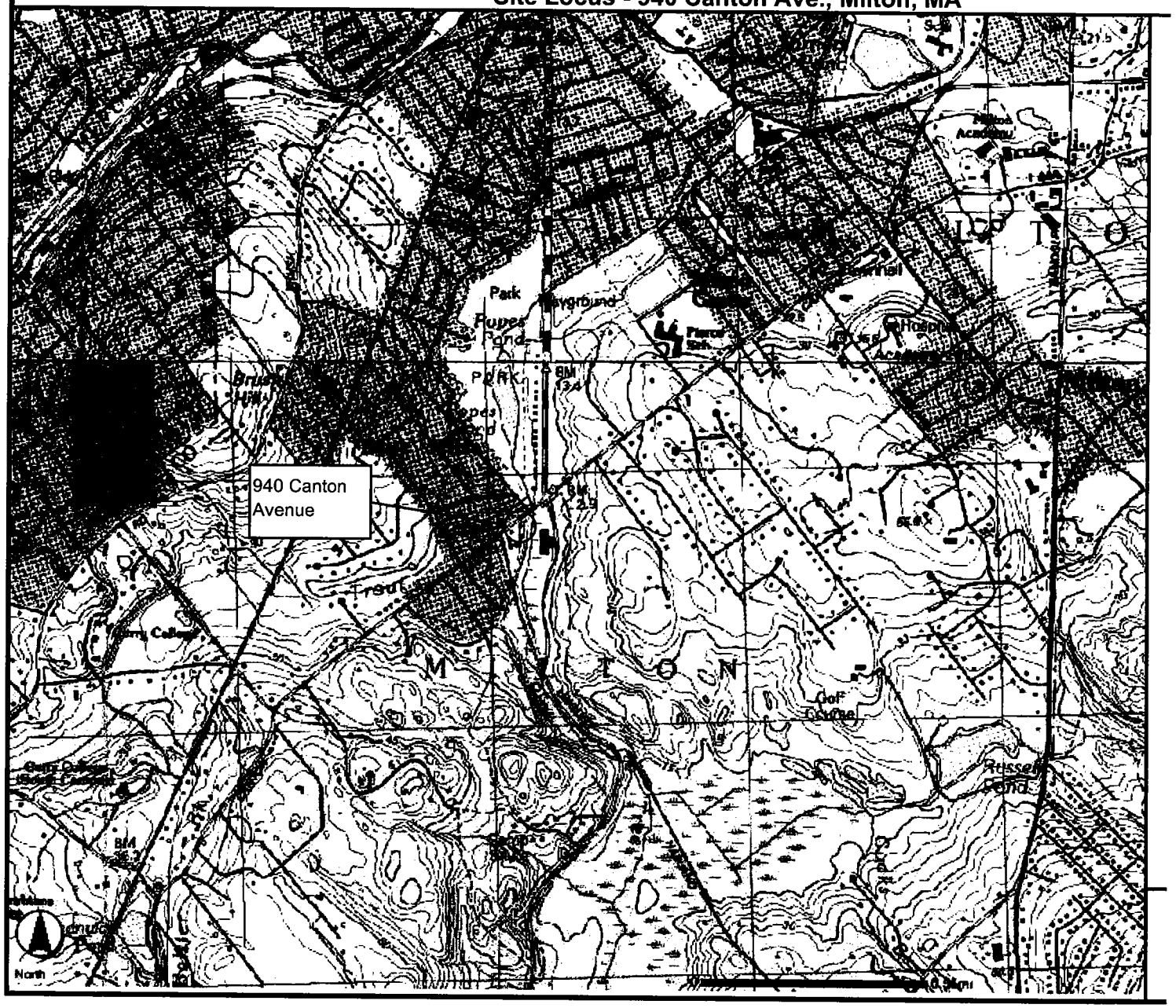

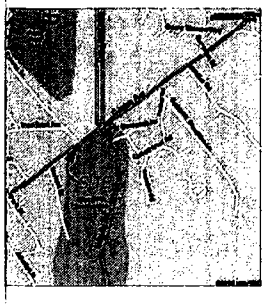

NOT TO SCALE

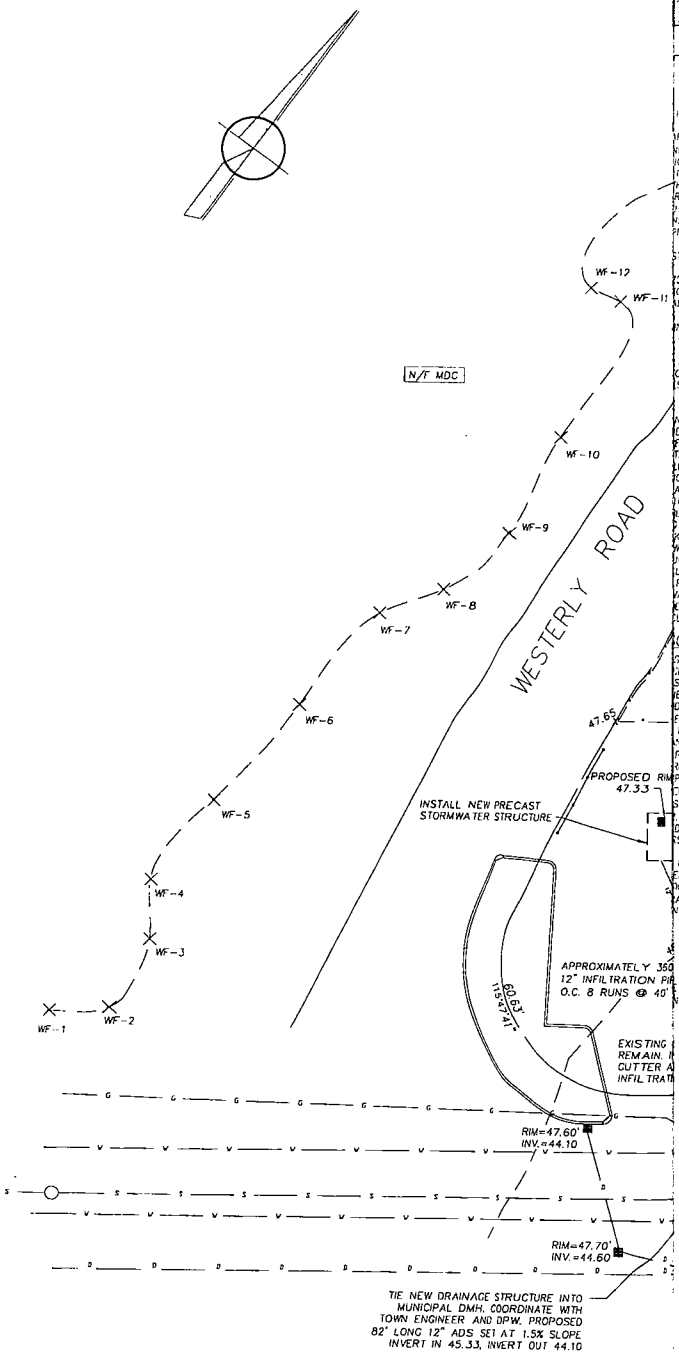

AW ALL APPLICABLE CODES, RULES, AND
BUT NOT LIMITED TO 527 CMR 9.00 TANKS AND
PPLICABLE OSHA REGULATIONS
E NUMBER (808) 344-7233 AT LEAST 72 HOURS
ION.
AW ALL LOCAL REQUIREMENTS, APPROVALS AND
HOSE FROM ANY BOARDS OR COMMISIONS AS
R
HE SITE AND FIELD VERIFY THE FOLLOWING ITEMS
N:
PROPERTY BOUNDARIES, EASEMENTS, AND RIGHT OF
STRUCTURES, BUILDINGS, AND DRIVEWAYS DEPICTED
CS, AND DEPTHS OF EXISTING UNDERGROUND
C, STRUCTURES, TANKS, ETC...
AND PROPOSED CRITICAL ELEVATIONS.
BETWEEN THE FIELD CONDITIONS VERIFIED AND
N, THE CONTRACTOR SHALL NOTIFY THE OWNER
OF WORK.
AND OBTAIN ALL NECESSARY PERMITS FROM LOCAL
BUILDING AND FIRE DEPARTMENTS, AND ALL TRADE
CTRICAL. CONTRACTOR IS RESPONSIBLE FOR
SSARY INSPECTIONS AND TESTS WITH LOCAL
AS EXISTING. REPLACE ALL DISTURBED PAVING,
NG TO MATCH EXISTING.
E PERMITS, TREATMENT AND ALL REPORTING,
ESSARY DEWATERING. ANY DEWATERING WILL BE DONE
TATE ENVIRONMENTAL REQUIREMENTS AND ANY
L PERMITTING SHOULD BE COORDINATED IN ADVANCE
G CONSTRUCTION.
ATION AND TESTING SPECIFICATIONS AND CHECKLISTS
HIS INSTALLATION.
LE FOR RESTORATION OF ALL EXISTING
DURING CONSTRUCTION.
SOIL SUITABLE FOR REUSE SHALL BE MAINTAINED ON
W TANK AND PIPING BACKFILL.
SIGHT TO SITE SHALL MEET ALL MANUFACTURER
LEAN, NON-CONTAMINATED MATERIAL.
RESPONSIBLE FOR THE REMOVAL OF STOCK PILE AND
VATED MATERIALS EXCEPT CONTAMINATED SOIL.
E UNIT COST TO LOAD, TRANSPORT AND DISPOSE OF
LUDING ALL TESTING AND REPORTING, AND TAXES.

COPE

SPOSE OF EXISTING UG TANKS AND CONTENTS
ESSING OF DISPOSAL CARD AND FIRE DEPT FP-290R.
SPOSE EXISTING UG PIPING.
ER TO PREVENT SOIL MIGRATION BETWEEN TANK
DING SOIL.
F WALL FIBERGLASS TANKS INCLUDING ALL TANK
NEW TANKS TO BE PROPERLY ANCHORED UTILIZING
UFACTURER HOLD DOWN STRAPS.
PIPE INSIDE 4" HDPE DUCT PIPING AND INSTALL
RING EQUIPMENT.
PS UNDER ALL DISPENSERS.
CINFORCED CONCRETE MAT OVER TNAKS.
S TO BE REMOVED AND DISPOSED OR REBUILT AS
(1) DISPENSER TO BE REPLACED WITH 3+1
D BY OWNER. CONTRACTOR TO INSTALL, WIRE, AND
S INCLUDING CALIBRATION AND SEALER OF WEIGHTS
UNDER DISPENSERS. EXPAND EXISTING TLS-350 TO
ED SENSORS.
OOF DRAIN INFILTRATION SYSTEM FOR CANOPY DRAIN.
AINAGE SYSTEM BY INSTALLING (1) PRE-CAST OIL
STALLING OUTLET PIPING TO MUNICIPAL STORMWATER

MAP L 1-1
B-BUSINESS
NUMBER: (617) 696-5178
NUMBER: (617) 898-4925

0 20 40
GRAPHIC SCALE

ES AND OTHER TOPOGRAPHIC INFORMATION
HIS DRAWING WERE TAKEN FROM A PLAN ENTITLED:
ULT PLAN, PLAN OF LAND CANTON AVE MILTON,
NTY, MA. PREPARED BY: YUNITS ENGINEERING CO.
NG ENGINEERS, 11 TECHNICAL PARK DRIVE
A 02343 (781) 767-1400. PREPARED FOR: BLUE
PPLY REALTY TRUST, STEPHEN WELLS 942 CANTON
A. DATE PREPARED: 1997. SCALE: 1"=20'

AYOUB ENGINEERING EXPRESSLY DISCLAIMS ANY RESPONSIBILITY FOR MONITORING, INSPECTING, OBSERVING, OR SUPERVISING CONSTRUCTION SERVICES, OR THE MEANS, METHODS, SEQUENCES AND TECHNIQUES OF CONSTRUCTION OR FOR JOB SITE SAFETY AND PROGRAMS FOR THE PROJECT DEFINED BY THE PLANS FOR WHICH THIS CERTIFICATION IS AFFIXED. AYOUB HAS NOT BEEN RETAINED FOR NOR SHALL IT HAVE ANY CONTROL OVER OR BE IN CHARGE OF ACTS OR OMISSIONS OF ANY CONTRACTOR, SUBCONTRACTOR, OTHER AGENTS OR EMPLOYEES OR OF ANY OTHER PERSONS PERFORMING PORTIONS OF THE WORK.

REVISIONS

REV	PER	DATE	DESCRIPTION	BY
1	AC	9/7/06	REVISE TANKS TO DW FC AND PIPING TO FLEX PIPE	AC
2				
3				
4				
5				
6				
7				
8				
9				
10				
11				
12				
13				
14				
15				
16				
17				
18				

PREPARED BY
AYOUB ENGINEERING
ENGINEERING & ARCHITECTURAL CONSULTANTS
CORPORATE OFFICE:
414 BENEFIT STREET
PAWTUCKET, RHODE ISLAND 02861
PHONE: (401) 728-5533
FAX: (401) 724-1110
254-B N. BROADWAY, STE. 206
SALEM, NEW HAMPSHIRE 03079
PHONE: (603) 894-4828
FAX: (603) 894-4827
E-MAIL: INFO@AYOUBENGINEERING.COM

PREPARED FOR
BLUE HILL AUTO SUPPLY
940 CANTON AVE
MILTON, MA 02186
617-698-7935

PROJECT ADDRESS
MILTON, MA
940 CANTON AVENUE

SHEET DESCRIPTION
PIPING UPGRADE

PROJECT NO.	3710
CAD FILE NO.	3710TK-1 REV1
SCALE:	1"=20'
DWN. BY:	AC
DATE:	5/24/06 REV. 9/7/06

SHEET NO.
TK-1

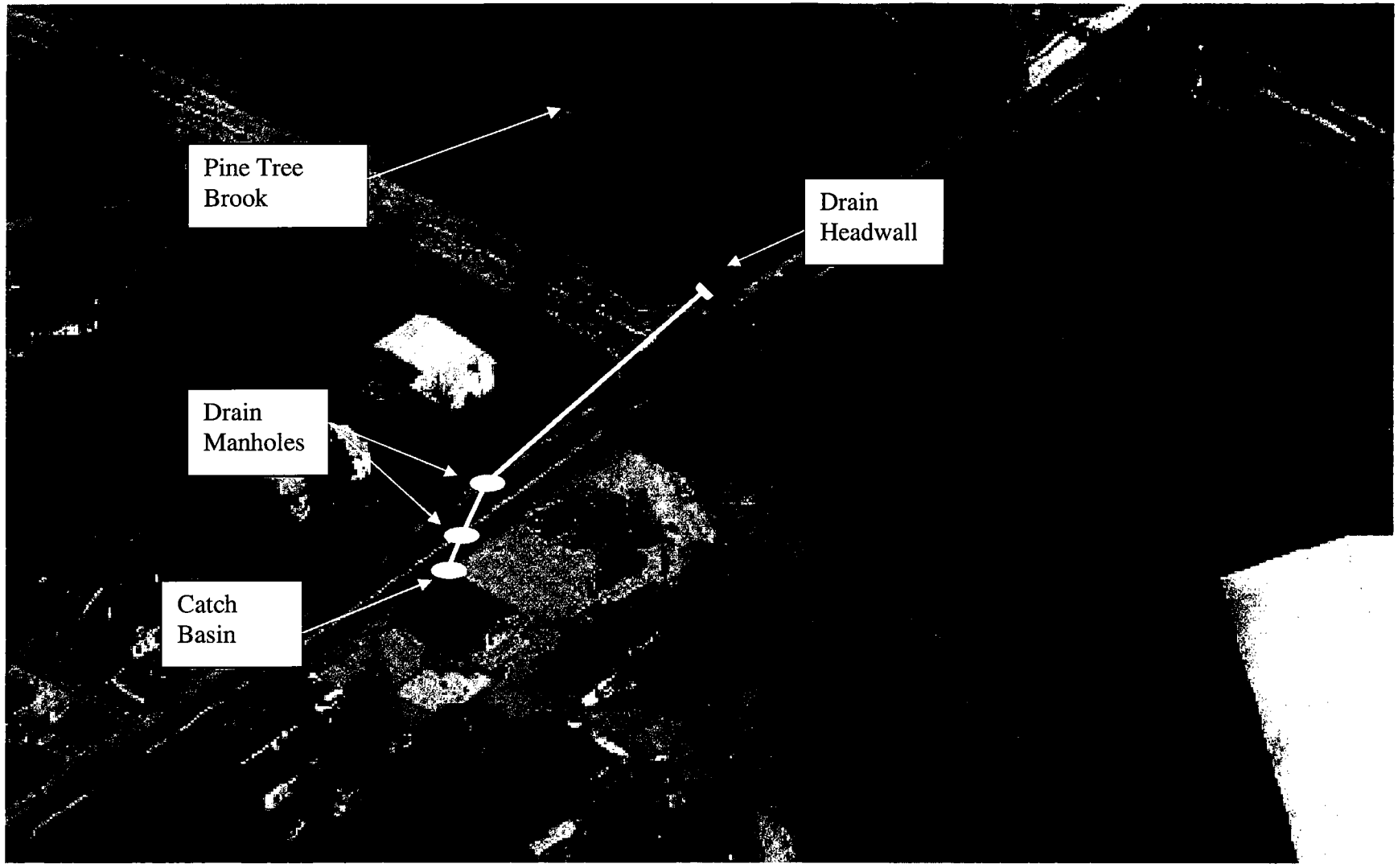
Pine Tree
Brook
Drain
Headwall
Drain
Manholes
Catch
Basin

Laboratory Data

R.I. Analytical

Specialists in Environmental Services

CERTIFICATE OF ANALYSIS

Lincoln Environmental, Inc.
Attn: Mr. Keith Sullivan
333 Washington Highway
Smithfield, RI 02917

Date Received: 9/11/06
Date Reported: 9/18/06
P.O. #:
Work Order #: 0609-16392

DESCRIPTION: PROJECT# 027810 940 CANTON AVENUE (ONE GROUNDWATER)

Subject sample(s) has/have been analyzed by our Warwick, R.I. laboratory with the attached results.

Reference: All parameters were analyzed by 40 CFR,136/U.S. EPA approved methodologies and all NELAC requirements were met. The specific methodologies are listed in the methods column of the Certificate Of Analysis.

Data qualifiers (if present) are explained in full at the end of a given sample's analytical results.

Certification #: RI-033, MA-RI015, CT-PH-0508, ME-RI015
NH-253700 A & B, USDA S-41844, NY-11726

If you have any questions regarding this work, or if we may be of further assistance, please contact our customer service department.

We certify that the following results are true and accurate to the best of our knowledge:

Data Reporting

enc: Chain of Custody

R.I. Analytical Laboratories, Inc.

CERTIFICATE OF ANALYSIS

Lincoln Environmental, Inc.
Date Received: 9/11/06
Work Order #: 0609-16392

Approved by: _____
Data Reporting

Sample # 001
SAMPLE DESCRIPTION: NPDES INFLUENT
SAMPLE TYPE: GRAB
SAMPLE DATE/TIME: 9/11/2006 @ 12:00

PARAMETER	SAMPLE RESULTS	DET. LIMIT	UNITS	METHOD	DATE ANALYZED	ANALYST
TOTAL CYANIDE	<0.01	0.01	mg/l	EPA 335.2	9/14/06	CB
HEXAVALENT CHROMIUM	<0.02	0.02	mg/l	SM3500-CR D	9/11/06	ML
T. SUSPENDED SOLIDS	3400	2.0	mg/l	EPA 160.2	9/14/06	MV
T. RESIDUAL CHLORINE	<2.5	2.5	mg/l	EPA 330.5	9/11/06	ML
TPH						
TPH GC/FID	450	100	ug/l	SW846 8100M	9/14/06	CDC
Extraction date	Extracted			SW846 3510	9/12/06	RAS
PCB						
Aroclor-1016	<1	1	ug/l	SW-846 8082	9/12/06	MFT
Aroclor-1221	<1	1	ug/l	SW-846 8082	9/12/06	MFT
Aroclor-1232	<1	1	ug/l	SW-846 8082	9/12/06	MFT
Aroclor-1242	<1	1	ug/l	SW-846 8082	9/12/06	MFT
Aroclor-1248	<1	1	ug/l	SW-846 8082	9/12/06	MFT
Aroclor-1254	<1	1	ug/l	SW-846 8082	9/12/06	MFT
Aroclor-1260	<1	1	ug/l	SW-846 8082	9/12/06	MFT
SURROGATE			RANGE	SW-846 8082	9/12/06	MFT
Tetrachloro-m-xylene (TCMX)	49		30-150%	SW-846 8082	9/12/06	MFT
Decachlorobiphenyl	34		30-150%	SW-846 8082	9/12/06	MFT
Extraction date	Extracted			SW846 3510	9/11/06	MC
Volatile Organic Compounds						
Benzene	<1	1	ug/l	SW-846 8260B	9/14/06	ST
Bromobenzene	<1	1	ug/l	SW-846 8260B	9/14/06	ST
Bromochloromethane	<1	1	ug/l	SW-846 8260B	9/14/06	ST
Bromodichloromethane	<1	1	ug/l	SW-846 8260B	9/14/06	ST
Bromoform	<1	1	ug/l	SW-846 8260B	9/14/06	ST
Bromomethane	<2	2	ug/l	SW-846 8260B	9/14/06	ST
n-Butylbenzene	7	1	ug/l	SW-846 8260B	9/14/06	ST
sec-Butylbenzene	3	1	ug/l	SW-846 8260B	9/14/06	ST
tert-Butylbenzene	<1	1	ug/l	SW-846 8260B	9/14/06	ST
Carbon Tetrachloride	<1	1	ug/l	SW-846 8260B	9/14/06	ST
Chlorobenzene	<1	1	ug/l	SW-846 8260B	9/14/06	ST
Chloroethane	<5	5	ug/l	SW-846 8260B	9/14/06	ST
Chloroform	<1	1	ug/l	SW-846 8260B	9/14/06	ST
Chloromethane	<5	5	ug/l	SW-846 8260B	9/14/06	ST
2-Chlorotoluene	<1	1	ug/l	SW-846 8260B	9/14/06	ST
4-Chlorotoluene	<1	1	ug/l	SW-846 8260B	9/14/06	ST
Dibromochloromethane	<1	1	ug/l	SW-846 8260B	9/14/06	ST
1,2-Dibromo-3-Chloropropane	<2	2	ug/l	SW-846 8260B	9/14/06	ST
1,2-Dibromoethane(EDB)	<1	1	ug/l	SW-846 8260B	9/14/06	ST
Dibromomethane	<2	2	ug/l	SW-846 8260B	9/14/06	ST
1,2-Dichlorobenzene	<1	1	ug/l	SW-846 8260B	9/14/06	ST

R.I. Analytical Laboratories, Inc.

CERTIFICATE OF ANALYSIS

Lincoln Environmental, Inc.
Date Received: 9/11/06
Work Order #: 0609-16392

Approved by: _____
Data Reporting

Sample # 001
SAMPLE DESCRIPTION: NPDES INFLUENT
SAMPLE TYPE: GRAB
SAMPLE DATE/TIME: 9/11/2006 @ 12:00

PARAMETER	SAMPLE RESULTS	DET. LIMIT	UNITS	METHOD	DATE ANALYZED	ANALYST
1,3-Dichlorobenzene	<1	1	ug/l	SW-846 8260B	9/14/06	ST
1,4-Dichlorobenzene	<1	1	ug/l	SW-846 8260B	9/14/06	ST
Dichlorodifluoromethane	<5	5	ug/l	SW-846 8260B	9/14/06	ST
1,1-Dichloroethane	<1	1	ug/l	SW-846 8260B	9/14/06	ST
1,2-Dichloroethane	<1	1	ug/l	SW-846 8260B	9/14/06	ST
1,1-Dichloroethene	<1	1	ug/l	SW-846 8260B	9/14/06	ST
cis-1,2-Dichloroethene	<1	1	ug/l	SW-846 8260B	9/14/06	ST
trans-1,2-Dichloroethene	<1	1	ug/l	SW-846 8260B	9/14/06	ST
1,2-Dichloropropane	<1	1	ug/l	SW-846 8260B	9/14/06	ST
1,3-Dichloropropane	<1	1	ug/l	SW-846 8260B	9/14/06	ST
2,2-Dichloropropane	<1	1	ug/l	SW-846 8260B	9/14/06	ST
1,1-Dichloropropene	<1	1	ug/l	SW-846 8260B	9/14/06	ST
1,3-Dichloropropene (total)	<1	1	ug/l	SW-846 8260B	9/14/06	ST
Ethylbenzene	<1	1	ug/l	SW-846 8260B	9/14/06	ST
Hexachlorobutadiene	<1	1	ug/l	SW-846 8260B	9/14/06	ST
Isopropylbenzene	1	1	ug/l	SW-846 8260B	9/14/06	ST
p-Isopropyltoluene	<1	1	ug/l	SW-846 8260B	9/14/06	ST
Methylene Chloride	<5	5	ug/l	SW-846 8260B	9/14/06	ST
Naphthalene	<1	1	ug/l	SW-846 8260B	9/14/06	ST
n-Propylbenzene	2	1	ug/l	SW-846 8260B	9/14/06	ST
Styrene	<1	1	ug/l	SW-846 8260B	9/14/06	ST
1,1,1,2-Tetrachloroethane	<1	1	ug/l	SW-846 8260B	9/14/06	ST
1,1,2,2-Tetrachloroethane	<1	1	ug/l	SW-846 8260B	9/14/06	ST
Tetrachloroethene	<1	1	ug/l	SW-846 8260B	9/14/06	ST
Toluene	<1	1	ug/l	SW-846 8260B	9/14/06	ST
1,2,3-Trichlorobenzene	<1	1	ug/l	SW-846 8260B	9/14/06	ST
1,2,4-Trichlorobenzene	<1	1	ug/l	SW-846 8260B	9/14/06	ST
1,1,1-Trichloroethane	<1	1	ug/l	SW-846 8260B	9/14/06	ST
1,1,2-Trichloroethane	<1	1	ug/l	SW-846 8260B	9/14/06	ST
Trichloroethene	<1	1	ug/l	SW-846 8260B	9/14/06	ST
Trichlorofluoromethane	<1	1	ug/l	SW-846 8260B	9/14/06	ST
1,2,3-Trichloropropane	<1	1	ug/l	SW-846 8260B	9/14/06	ST
1,2,4-Trimethylbenzene	<1	1	ug/l	SW-846 8260B	9/14/06	ST
1,3,5-Trimethylbenzene	<1	1	ug/l	SW-846 8260B	9/14/06	ST
Vinyl Chloride	<1	1	ug/l	SW-846 8260B	9/14/06	ST
o-Xylene	<1	1	ug/l	SW-846 8260B	9/14/06	ST
m&p-Xylene	<1	1	ug/l	SW-846 8260B	9/14/06	ST
MTBE	3	2	ug/l	SW-846 8260B	9/14/06	ST
Acetone	<10	10	ug/l	SW-846 8260B	9/14/06	ST
Tertiary Amyl Methyl Ether	<10	10	ug/l	SW-846 8260B	9/14/06	ST
Tertiary Butanol (TBA)	<10	10	ug/l	SW-846 8260B	9/14/06	ST
SURROGATES			RANGE	SW-846 8260B	9/14/06	ST

R.I. Analytical Laboratories, Inc.

CERTIFICATE OF ANALYSIS

Lincoln Environmental, Inc.
Date Received: 9/11/06
Work Order #: 0609-16392

Approved by: _____
Data Reporting

Sample # 001
SAMPLE DESCRIPTION: NPDES INFLUENT
SAMPLE TYPE: GRAB
SAMPLE DATE/TIME: 9/11/2006 @ 12:00

PARAMETER	SAMPLE RESULTS	DET. LIMIT	UNITS	METHOD	DATE ANALYZED	ANALYST
Dibromofluoromethane	103		86-118%	SW-846 8260B	9/14/06	ST
Toluene-d8	104		88-110%	SW-846 8260B	9/14/06	ST
4-Bromofluorobenzene	103		86-115%	SW-846 8260B	9/14/06	ST
1,2 Dichloroethane-d4	96		80-120%	SW-846 8260B	9/14/06	ST
SEMI-VOLATILE ORGANIC COMPOUNDS						
Acenaphthene	<10	10	ug/l	SW-846 8270C	9/13/06	RGM
Acenaphthylene	<10	10	ug/l	SW-846 8270C	9/13/06	RGM
Anthracene	<10	10	ug/l	SW-846 8270C	9/13/06	RGM
Benzo(a)anthracene	<10	10	ug/l	SW-846 8270C	9/13/06	RGM
Benzo(b)fluoranthene	<10	10	ug/l	SW-846 8270C	9/13/06	RGM
Benzo(k)fluoranthene	<10	10	ug/l	SW-846 8270C	9/13/06	RGM
Benzo(g,h,i)perylene	<10	10	ug/l	SW-846 8270C	9/13/06	RGM
Benzo(a)pyrene	<10	10	ug/l	SW-846 8270C	9/13/06	RGM
Bis(2-ethylhexyl)phthalate	<10	10	ug/l	SW-846 8270C	9/13/06	RGM
Butylbenzyl phthalate	<10	10	ug/l	SW-846 8270C	9/13/06	RGM
Chrysene	<10	10	ug/l	SW-846 8270C	9/13/06	RGM
Dibenzo(a,h)anthracene	<10	10	ug/l	SW-846 8270C	9/13/06	RGM
Di-n-butyl phthalate	<10	10	ug/l	SW-846 8270C	9/13/06	RGM
Diethyl phthalate	<10	10	ug/l	SW-846 8270C	9/13/06	RGM
Dimethyl phthalate	<10	10	ug/l	SW-846 8270C	9/13/06	RGM
Di-n-octyl phthalate	<10	10	ug/l	SW-846 8270C	9/13/06	RGM
Fluoranthene	<10	10	ug/l	SW-846 8270C	9/13/06	RGM
Fluorene	<10	10	ug/l	SW-846 8270C	9/13/06	RGM
Indeno(1,2,3-cd)pyrene	<10	10	ug/l	SW-846 8270C	9/13/06	RGM
Naphthalene	<10	10	ug/l	SW-846 8270C	9/13/06	RGM
Phenanthrene	<10	10	ug/l	SW-846 8270C	9/13/06	RGM
Pyrene	<10	10	ug/l	SW-846 8270C	9/13/06	RGM
4-Chloro-3-methylphenol	<10	10	ug/l	SW-846 8270C	9/13/06	RGM
2-Chlorophenol	<10	10	ug/l	SW-846 8270C	9/13/06	RGM
2,4-Dichlorophenol	<10	10	ug/l	SW-846 8270C	9/13/06	RGM
2,4-Dimethylphenol	<10	10	ug/l	SW-846 8270C	9/13/06	RGM
2-Methyl-4,6-dinitrophenol	<10	10	ug/l	SW-846 8270C	9/13/06	RGM
2,4-Dinitrophenol	<10	10	ug/l	SW-846 8270C	9/13/06	RGM
2-Nitrophenol	<10	10	ug/l	SW-846 8270C	9/13/06	RGM
4-Nitrophenol	<10	10	ug/l	SW-846 8270C	9/13/06	RGM
Pentachlorophenol	<10	10	ug/l	SW-846 8270C	9/13/06	RGM
Phenol	<10	10	ug/l	SW-846 8270C	9/13/06	RGM
2,4,5-Trichlorophenol	<10	10	ug/l	SW-846 8270C	9/13/06	RGM
2,4,6-Trichlorophenol	<10	10	ug/l	SW-846 8270C	9/13/06	RGM
Dibenzofuran	<10	10	ug/l	SW-846 8270C	9/13/06	RGM
2-Methylnaphthalene	<10	10	ug/l	SW-846 8270C	9/13/06	RGM
SURROGATES			RANGE	SW-846 8270C	9/13/06	RGM

R.I. Analytical Laboratories, Inc.

CERTIFICATE OF ANALYSIS

Lincoln Environmental, Inc.
Date Received: 9/11/06
Work Order #: 0609-16392

Approved by: Data Reporting

Sample # 001
SAMPLE DESCRIPTION: NPDES INFLUENT
SAMPLE TYPE: GRAB
SAMPLE DATE/TIME: 9/11/2006 @ 12:00

PARAMETER	SAMPLE RESULTS	DET. LIMIT	UNITS	METHOD	DATE ANALYZED	ANALYST
Phenol-d5	37		15-110%	SW-846 8270C	9/13/06	RGM
2-Fluorophenol	37		15-110%	SW-846 8270C	9/13/06	RGM
2,4,6-Tribromophenol	71		15-110%	SW-846 8270C	9/13/06	RGM
Nitrobenzene-d5	66		30-130%	SW-846 8270C	9/13/06	RGM
2-Fluorobiphenyl	65		30-130%	SW-846 8270C	9/13/06	RGM
P-Terphenyl-d14	68		30-130%	SW-846 8270C	9/13/06	RGM
Extraction date	Extracted			SW846 3510	9/12/06	EOO
TOTAL METALS						
ANTIMONY	<0.1	0.1	mg/l	EPA 200.7	9/13/06	CL
ARSENIC	<0.1	0.1	mg/l	EPA 200.7	9/13/06	CL
CADMIUM	<0.005	0.005	mg/l	EPA 200.7	9/13/06	CL
CHROMIUM	<0.03	0.03	mg/l	EPA 200.7	9/13/06	CL
COPPER	<0.05	0.05	mg/l	EPA 200.7	9/13/06	CL
IRON	10	0.05	mg/l	EPA 200.7	9/13/06	CL
LEAD	0.050	0.002	mg/l	EPA 200.9	9/15/06	REA
MERCURY	<0.0005	0.0005	mg/l	EPA 245.1	9/12/06	REA
NICKEL	<0.02	0.02	mg/l	EPA 200.7	9/13/06	CL
SELENIUM	<0.2	0.2	mg/l	EPA 200.7	9/13/06	CL
SILVER	<0.001	0.001	mg/l	EPA 200.9	9/13/06	REA
ZINC	0.18	0.02	mg/l	EPA 200.7	9/13/06	CL

Total Residual Chlorine - Increased detection limit due to limited sample volume.

CHAIN OF CUSTODY RECORD

R.I. Analytical Laboratories, Inc.

41 Illinois Avenue
Warwick, RI 02888-3007
Tel: 800-937-2580
Fax: 401-738-1970

131 Coolidge St, Suite 105
Hudson, MA 01749-1331
Tel: 800-937-2580
Fax: 978-568-0078

02-16-06

Date Collected	Time Collected	Field Sample Identification	Grab or Composite	# of Containers & Type C	Preservation Code P	Matrix Code M	TPH 8100M	8260 EXTENDED LIST	8270 (SVOC Phthalates, XPAHs, Phenols)	TOTAL SUSPED SOLID TOTAL RESID CHLORINE	PCBs	TOTAL CYANIDE	Cr VI	TOTAL COPPER, CHROMIUM IRON, ZINC	TOT NICKEL, SILVER SELENIUM, MERCURY	TOTAL LEAD, ANTIMONY ARSENIC, CADMIUM	[illegible]	Dissolved Fe **		Dissolved ** COPPER, Cr, Fe, Zn, Ni, Ag, Se, Hg, Pb, Sb, As, Cd				
9/11/06	1200	NPDES INFLUENT	G	14	H	GW	X	X	X	X	X	X	X	X	X	X		X		X				
					N																			
					NP																			
					S																			
					SH																			

Client Information	
Company Name:	Lincoln Env.
Address:	333 Geo. Washington Hwy
City / State / Zip:	Smithfield RI
Telephone:	401.232.3353 x142 Fax:
Contact Person:	K. Sullivan

Project Information	
Project Name:	940 Canton Ave
P.O. Number:	Project Number: 027810
Report To:	K Sullivan Phone: Fax:
Sampled by:	K Sullivan
Quote No:	Email report to these addresses: KSullivan@LincolnENV.com

Relinquished By	Date	Time	Received By	Date	Time
[illegible]	9/11/06	1630	Kristin Larocque	9-11-06	1630

Turn Around Time			
	Normal		EMAIL Report
✓	5 Business days. Possible surcharge		
	Rush _____ (business days)		

Project Comments

Circle if applicable: GW-1, GW-2, GW-3, S-1, S-2, S-3

MCP Data Enhancement QC Package? Yes No

For 8260 report EDB, TAME, TBA + ACETONE

** Hold dissolved metals - do not run until requested (KL) 9-11-06 (per client)

Run Diss Iron 8/13/06 [illegible] - see 16393 for Fe diss.

Temp. Upon Receipt °C

Lab Use Only	
	Sample Pick Up Only
	RIAL sampled; attach field hours
X	Shipped on ice
Workorder No.	0609-16392

Containers: P=Poly, G=Glass, AG=Amber Glass, V=Vial, St=Sterile Preservatives: A=Ascorbic Acid, NH4=NH_4Cl, H=HCl, M=MeOH, N=HNO_3, NP=None, S=H_2SO_4, SB=$NaHSO_4$, SH=NaOH, T=$Na_2S_2O_3$, Z=ZnOAc

Matrix Codes: GW=Groundwater, SW=Surface Water, WW=Wastewater, DW=Drinking Water, S=Soil, SL=Sludge, A=Air, B=Bulk/Solid, O=_____ 0609-16393

R.I. Analytical

Specialists in Environmental Services

CERTIFICATE OF ANALYSIS

Lincoln Environmental, Inc.
Attn: Mr. Keith Sullivan
333 Washington Highway
Smithfield, RI 02917

Date Received: 9/13/06
Date Reported: 9/20/06
P.O. #:
Work Order #: 0609-16393

DESCRIPTION: PROJECT# 027810 940 CANTON AVENUE (ONE GROUNDWATER)

Subject sample(s) has/have been analyzed by our Warwick, R.I. laboratory with the attached results.

Reference: All parameters were analyzed by 40 CFR,136/U.S. EPA approved methodologies and all NELAC requirements were met. The specific methodologies are listed in the methods column of the Certificate Of Analysis.

Data qualifiers (if present) are explained in full at the end of a given sample's analytical results.

Certification #: RI-033, MA-RI015, CT-PH-0508, ME-RI015
NH-253700 A & B, USDA S-41844, NY-11726

If you have any questions regarding this work, or if we may be of further assistance, please contact our customer service department.

We certify that the following results are true and accurate to the best of our knowledge:

Data Reporting

enc: Chain of Custody

R.I. Analytical Laboratories, Inc.

CERTIFICATE OF ANALYSIS

Lincoln Environmental, Inc.
Date Received: 9/13/06
Work Order #: 0609-16393

Approved by: _____
Data Reporting

Sample # 001
SAMPLE DESCRIPTION: NPDES INFLUENT
SAMPLE TYPE: GRAB
SAMPLE DATE/TIME: 9/11/2006 @ 12:00

PARAMETER	SAMPLE RESULTS	DET. LIMIT	UNITS	METHOD	DATE ANALYZED	ANALYST
DISSOLVED METALS						
IRON	4.9	0.05	mg/l	EPA 200.7	9/20/06	CL
DISSOLVED METALS						
COPPER	<0.05	0.05	mg/l	EPA 200.7	9/20/06	CL
LEAD	<0.04	0.04	mg/l	EPA 200.7	9/20/06	CL

CHAIN OF CUSTODY RECORD

R.I. Analytical Laboratories, Inc.

41 Illinois Avenue
Warwick, RI 02888-3007
Tel: 800-937-2580
Fax: 401-738-1970

131 Coolidge St, Suite 105
Hudson, MA 01749-1331
Tel: 800-937-2580
Fax: 978-568-0078

02-16-06

Date Collected	Time Collected	Field Sample Identification	Grab or Composite	# of Containers & Type C	Preservation Code P	Matrix Code M	TPH 8100M	8260 EXTENDED LIST	8270 (SVOC Phthalates, XPAHs, Phenols)	TOTAL SUSPED SOLID TOTAL RESID CHLORINE	PCBs	TOTAL CYANIDE	Cr VI	TOTAL COPPER, CHROMIUM, IRON, ZINC	TOT NICKEL, SILVER, SELENIUM, MERCURY	TOTAL LEAD, ANTIMONY, ARSENIC, CADMIUM	[illegible]	Dissolved Fe **		Dissolved ** (Copper, Cr, Fe, Zn, Ni, Ag, Se, Hg, Pb, Sb, As, Cd)				
9/11/06	1200	NPDES INFLUENT	G	14	H	GW	X	X	X	X	X	X	X	X	X	X		X		X				
					N																			
					NP																			
					S																			
					SH																			

Client Information		Project Information	
Company Name:	Lincoln Env.	Project Name:	940 Canton Ave
Address:	333 Geo. Washington Hwy	P.O. Number:	Project Number: 027810
City / State / Zip:	Smithfield RI	Report To: K Sullivan	Phone: Fax:
Telephone:	401.232.3353 x142 Fax:	Sampled by: K. Sullivan	Email report to these addresses: KSullivan@LincolnENV.com
Contact Person:	K. Sullivan	Quote No:	

Relinquished By	Date	Time	Received By	Date	Time
[illegible]	9/11/06	1630	Kristin Larocque	9-11-06	1630

Turn Around Time		
	Normal	EMAIL Report
✓	5 Business days. Possible surcharge	
	Rush _____ (business days)	

Project Comments

Circle if applicable: GW-1, GW-2, GW-3, S-1, S-2, S-3

MCP Data Enhancement QC Package? Yes No

For 8260 report EDB, TAME, TBA + ACETONE

** Hold dissolved metals - do not run until requested (KN) 9-11-06 - Take off hold 9/13/06 to run Diss Fe only (KN)

Run Diss Iron 8/13/06 [illegible]

Temp. Upon Receipt °C

Lab Use Only	
	Sample Pick Up Only
	RIAL sampled; attach field hours
X	Shipped on ice
	Workorder No 0609-16392

Containers: P=Poly, G=Glass, AG=Amber Glass, V=Vial, St=Sterile Preservatives: A=Ascorbic Acid, NH4=NH_4Cl, H=HCl, M=MeOH, N=HNO_3, NP=None, S=H_2SO_4, SB=$NaHSO_4$, SH=NaOH, T=$Na_2S_2O_3$, Z=ZnOAc

Matrix Codes: GW=Groundwater, SW=Surface Water, WW=Wastewater, DW=Drinking Water, S=Soil, SL=Sludge, A=Air, B=Bulk/Solid, O=_____ 0609-16393

Run Diss Cu and Pb 9/18/06 [illegible]

Page of

R.I. Analytical

Specialists in Environmental Services

DRAFT

CERTIFICATE OF ANALYSIS

Lincoln Environmental, Inc.
Attn: Mr. Keith Sullivan
333 Washington Highway
Smithfield, RI 02917

Date Received: 9/20/06
Date Reported:
P.O. #:
Work Order #: 0609-17061

DESCRIPTION: PROJECT# 027810 - 960 CANTON AVENUE

Subject sample(s) has/have been analyzed by our Warwick, R.I. laboratory with the attached results.

Reference: All parameters were analyzed by 40 CFR,136/U.S. EPA approved methodologies and all NELAC requirements were met. The specific methodologies are listed in the methods column of the Certificate Of Analysis.

Data qualifiers (if present) are explained in full at the end of a given sample's analytical results.

Certification #: RI-033, MA-RI015, CT-PH-0508, ME-RI015
NH-253700 A & B, USDA S-41844, NY-11726

If you have any questions regarding this work, or if we may be of further assistance, please contact our customer service department.

We certify that the following results are true and accurate to the best of our knowledge:

_____

Data Reporting

enc: Chain of Custody

DRAFT

R.I. Analytical Laboratories, Inc.

CERTIFICATE OF ANALYSIS

Lincoln Environmental, Inc.
Date Received: 9/20/06
Work Order #: 0609-17061

Approved by: _____
Data Reporting

Sample # 001
SAMPLE DESCRIPTION: NPDES INFLUENT - 0609-16392
SAMPLE TYPE: GRAB **SAMPLE DATE/TIME:** 9/11/2006 @ 12:00

PARAMETER	SAMPLE RESULTS	DET. LIMIT	UNITS	METHOD	DATE ANALYZED	ANALYST
TOTAL METALS						
ANTIMONY			ug/l	EPA 200.9		
ARSENIC			ug/l	EPA 200.9		
CADMIUM	0.8	0.2	ug/l	EPA 200.9	9/21/06	REA
SELENIUM			ug/l	EPA 200.9		
SILVER			ug/l	EPA 200.9		

Sample # 002
SAMPLE DESCRIPTION: NPDES INFLUENT - 0609-16393
SAMPLE TYPE: GRAB **SAMPLE DATE/TIME:** 9/11/2006 @ 12:00

PARAMETER	SAMPLE RESULTS	DET. LIMIT	UNITS	METHOD	DATE ANALYZED	ANALYST
DISSOLVED METALS FILTRATION						
LEAD	2.4	2.0	ug/l	EPA 200.9	9/21/06	LS
ZINC	55	20	ug/l	EPA 200.7	9/20/06	CL

Additional Unlisted Contaminants

The chemical concentration data for parameters detected in June 2006 but not listed on the NOI table are summarized below:

Parameter	Lab Method	Detection Limit	Result
Isopropylbenzene	8260B	1 ug/l	1 ug/l
n-propylbenzene	8260B	1 ug/l	2 ug/l
n-Butylbenzene	8260B	1 ug/l	7 ug/l
sec-Butylbenzene	8260B	1 ug/l	3 ug/l