NEWFIELDS

ELECTRONIC SUBMITTAL (NPDES.GeneralPermits@epa.gov)
AND
OVERNIGHT DELIVERY

October 24, 2005

US Environmental Protection Agency
RGP-NOI Processing
Municipal Assistance Unit (CMU)
1 Congress Street, Suite 1100
Boston, MA 02114-2023

RE: NPDES REMEDIATION GENERAL PERMIT – NOI Submittal

Bella Costa Restaurant	Shell-Branded Service Station
147 Cochituate Road	846 Concord Street
Framingham, Middlesex County, MA	Framingham, Middlesex County, MA

To Whom It May Concern:

On September 9, 2005, the USEPA published the NPDES Remediation General Permit ("RGP") in the Federal Register. It stated the deadline for submittal of Notice of Intents ("NOI") or individual NPDES applications for those facilities currently discharging under USEPA Permit Exclusions was October 10, 2005. On September 19, 2005, NewFields requested, in writing, a 60-day extension to the October 10, 2005 deadline. On October 6, 2005, George Papadopoulos granted an extension until October 24, 2005 via electronic mail. The electronic mail stated that in cases where the permittee was unable to submit all the required information by October 24, 2005, the application should be submitted with as much information as possible and supplemental data provided when it becomes available. Thus NewFields Princeton LLC, on behalf of Motiva Enterprises LLC, is submitting an incomplete NOI application package for the above referenced facility that will be certified by the operator, Motiva Enterprises LLC, upon its final submittal and completion.

Motiva Enterprises LLC is currently operating a Shell branded gasoline service station at 846 Concord Street in Framingham, MA. Remediation of this facility is being conducted under the Massachusetts Contingency Plan ("MCP") (310 CMR 40.0000). As part of the remediation project, a groundwater remediation system is operating at an adjacent property (Bella Costa Restaurant, 147 Cochituate Road, Framingham, MA). The remediation system is treating water from the basement sump under EPA Permit Exclusion #MA-04I-031. The receiving stream is Sucker Pond which flows to Brackett Reservoir. The Brackett Reservoir flows to the Charles River classified as Class B.

Pursuant to the NPDES RGP requirements, samples of the influent to the remediation system have been taken and analyzed by State of Massachusetts certified laboratories. The final data packages and associated quality control/ quality assurance ("QA/QC") documents are enclosed herein.

The results of the influent sampling indicate the presence of metals above the Appendix III and Appendix IV (0-5 dilution) limitations for Cadmium, Copper, Lead, Zinc and Iron. It should be noted that these metals are naturally occurring in the groundwater and are not associated with the gasoline service station remediation project. Samples of these metals will be taken in the receiving stream, upstream of the discharge point, to determine the concentrations in the surface waterbody. The results will be forwarded upon receipt.

NEWFIELDS
22 West Street
Red Bank, New Jersey 07701
732.224.7066 *tel* ~ 732.224.7633 *fax*
www.newfields.com

The dilution factor of the receiving stream, Sucker Pond, was calculated at 1.0 using the USGS Stream Stats Program. Thus the permittee is proposing to take hardness samples from the receiving stream, and effluent of the remediation system, in order to calculate site-specific metal limitations. The results will be provided to your office. If the site specific metal limitations calculated are higher than the Appendix IV limitations, which were calculated using a MA statewide average hardness of 50 mg/l CaCO3, the permittee reserves the right to submit an individual NPDES application as specified in the *Response to Comments on the October 2004 Proposed Remediation General Permit ("Response to Comments")* document posted on the EPA website.

The NPDES Remediation General Permit and associated *Response to Comments* document, allow the permittee to request revisions to the permit conditions based upon site-specific conditions. The following is a list of the requested revisions for this facility.

TEMPERATURE
In the *Response to Comments* document, the EPA agreed that "temperature limits should only apply if the water treatment contains a heating process that can alter the temperature of the discharge and therefore impact the receiving water body"....Therefore the EPA will review each NOI and determine whether the discharge has the potential to affect the temperature sufficiently enough to require monitoring". Since the existing groundwater treatment system does not, and will not, alter the temperature of the receiving waterbody, we are requesting that the EPA not impose monitoring and sampling requirements for temperature at the above referenced location.

PH
In the *Response to Comments* document, the EPA recognized that "in many cases, the pH will not be altered by the operation of the water treatment system." Thus Part I.C.2. of the RGP allows permittees in Massachusetts to request the pH range be widened to within 6.0 - 9.0 standard units (SU) or another range due to naturally occurring conditions in the receiving water. Similarly, permittees may request such a change if the naturally occurring source water is unaltered by the permittee's operation. The current pH limitation for Class B waters in Massachusetts in 6.5 - 8.3 SU. Since the pH of the groundwater will be unaltered by the permittee's operation, we are requesting the pH range be widened to 6.0 - 9.0 SU for this facility.

EXEMPTION FROM INITIAL START-UP SAMPLING REQUIREMENTS
In the *Response to Comments* document, the EPA agreed that "treatment systems operating under the EPA Permit Exclusion that have been discharging for several years, unless the system has been down for 45 days or more as of the date that the final RGP becomes effective, can be exempted from the initial start-up sampling requirements." Since the referenced remediation system has been discharging under an EPA Permit Exclusion, and has not been down for greater than 45 days as of the date the RGP became effective (September 9, 2005), we are requesting exemption from the initial start-up sampling requirements listed in the RGP.

COMPLIANCE PERIOD
In the *Response to Comments* document, the EPA stated they "will make every effort to provide existing dischargers with sufficient transition time to make any necessary changes to the treatment system in order to comply with the RGP." Based on the influent sampling results enclosed herein, the EPA may impose sampling for parameters not previously required (e.g. metals), or lower limitations on parameters currently required. In order to avoid ceasing operation of the groundwater remediation system due to the risk of Notice of Violations (NOVs) and monetary penalties, the EPA should permit a compliance period of 30 months. During this compliance period the EPA should waive the limitations on those parameters not previously required and maintain the existing limit on those parameters currently required to be sampled on a monthly basis under the EPA Permit Exclusion for a period of 30 months from the effective date of the permit. Regulation 40 CFR Part 122.47 allows a maximum compliance period of three years.

A compliance period of 30 months is requested for the following reasons:

- The permittee needs to collect additional influent, midpoint and effluent data from the existing remediation system over a period of 12 months in order to determine if a system modification is warranted; one year is needed to account for the temperature changes and groundwater table fluctuations.
- If the sampling results indicate a system modification is warranted, an additional 18 months is needed in order for the following activities to be performed: redesign of the treatment system by a professional engineer, research of various treatment options, obtain local permits, obtain access agreements, obtain capital dollars for equipment purchase, purchase equipment, install equipment, power drop modifications, existing treatment shed expansions and pilot testing the new treatment equipment.

APPROVAL OF ALTERNATE METHODOLOGIES

HEXAVALENT CHROMIUM

In the *Response to Comments* document, the EPA agreed that "Method 7196A is a possible substitute" for the hexavalent chromium methods 218.6 and 1636. To use this method, permittees were instructed to request it individually as an alternative test procedure. The permittee was unable to locate any labs able to run hexavalent chromium by method 218.6 or 1636 since they are considered outdated methods. Method 7196A is currently utilized. The required ML of 10 ug/l is achievable by this method. Thus we are requesting the EPA approve method 7196A for hexavalent chromium for this facility.

TOTAL CYANIDE

Appendix VI of the NPDES RGP specifies the test method for Total Cyanide is 335.4. This method has not been approved for use to date, therefore method 335.3 was utilized.

APPROVAL OF ALTERNATE MLs

TOTAL ZINC

The ML listed for Total Zinc using an ICP test method is 10 ug/l. A survey of laboratories showed that the lowest ML obtainable was 20 ug/l. Thus we are requesting the USEPA accept this alternate ML. The laboratory QA/QC data deliverable package has been enclosed for your convenience.

TOTAL COPPER

The ML listed for Total Copper using an ICP test method is 5 ug/l. A survey of laboratories showed that the lowest ML obtainable was 20-25 ug/l. Thus we are requesting the USEPA accept this alternate ML. The laboratory QA/QC data deliverable package has been enclosed for your convenience.

ETHYLENE DIBROMIDE

The ML listed for Ethylene Dibromide using method 504.1 is 0.01 ug/l. A survey of laboratories showed that the lowest ML obtainable was 0.015 ug/l. Thus we are requesting the USEPA accept this alternate ML. The laboratory QA/QC data deliverable package has been enclosed for your convenience.

If you have any questions, or require any additional information, I may be contacted at (732) 224-7066 extension 17.

Respectfully,
NewFields Princeton LLC

Michelle L. Smith
Project Scientist

Enclosures:
- Notice of Intent Form
- Figures
- Dilution Factor Calculations
- Approved Massachusetts Year 2002 Integrated List of Waters, September 2003 (303(d) list)
- Natural Heritage & Endangered Species Program – MA Div of Fisheries & Wildlife – Rare Species by Town
- Laboratory Analytical (System Influent)

C: Massachusetts Department of Environmental Protection
Division of Watershed Management
627 Main Street, 2nd Floor
Worcester, MA 01608
(w/ enclosures)

Town of Framingham
150 Concord Street
Framingham, MA 01702
(w/ enclosures)

David Weeks, Shell OPUS
(w/ enclosures) via electronic mail

Don Maggioli, LSP, Envirotrac Ltd.
(w/ enclosures) via electronic mail

NewFields File
(w/ enclosures)

NOI FORM

I. Suggested Notice of Intent (NOI) Form

In order to be covered by the remediation general permit (RGP), applicants must submit a written Notice of Intent (NOI) to EPA Region I and the appropriate state agency. **All parties meeting the definition of "operator" must fill out, sign, and submit separate NOIs.**

The "operator" is defined in Part I.B.1. as the person[1] who has operational control over plans and specifications, or the person who has day-to-day supervision and control of activities occurring at the site. For purposes of this permit, the operator is either:

i. The owner[2] (e.g., title holder, developer, or easement holder of the property) if that entity is performing all work related to complying with this permit; **or**

ii. Both the owner[2] (e.g., title holder, developer, or easement holder of the property) and contractor(s) if a contractor(s) has been hired to perform work related to complying with this permit.

This means that each party meeting the definition of operator should apply for coverage under the RGP if it has operational control over either the project site plans and specifications, including the ability to make modifications to those plans and specifications (e.g., the property owner), **or** has day-to-day operational control of those activities at a project which are necessary to ensure compliance with permit conditions (e.g., the contractor). Where a party's activity is part of a larger common plan (e.g., for the development or sale of the property), that party is only responsible for applying for the portions of the project for which it meets the definition of "operator." In many instances, there may be more than one party at a site performing tasks related to "operational control" and hence, more than one operator must submit an NOI. Depending on the site and the relationship between the parties (e.g., owner, contractor, etc.), there could be either a single party acting as site operator and consequently responsible for obtaining permit coverage, or there could be two or more operators all needing permit coverage.

The following are three general **"operator"** scenarios (variations on any of these three are possible, especially as the number of owners and contractors increases):

- *"Owner" as "Operator" - sole permittee.* The property owner designs the structures and control systems for the site, develops and implements the BMPP, and serves as general contractor (or has an on-site representative with full authority to direct day-to-day operations). Under the definition of operator, in this case, the "Owner" would be considered the "operator" and therefore the only party that needs permit coverage. Everyone else working on the site may be considered subcontractors and do not need to apply for permit coverage.

---

[1] Defined in 40 CFR 122.2.

[2] For purposes of this permit, the "owner" of a property is the person, as defined by 40 CFR 122.2, holding the title, deed, or legal document to the regulated property, facility, or activity, including a party working under an easement on the property.

- *"Contractor" as "Operator" - sole permittee.* The property owner hires a company (e.g., a contractor) to design the project and oversee all aspects, including preparation and implementation of the BMPP and compliance with the permit (e.g., a "turnkey" project). Here, the contractor would likely be the only party needing a permit. It is under this scenario that an individual having a personal residence built for his own use (e.g., not those to be sold for profit or used as rental property) would not be considered an operator. Similarly, EPA expects that property owners hiring a contractor or consultant to perform groundwater remediation work (e.g., due to a leaking fuel oil tank) would come under this type of scenario. EPA believes that the contractor, being a professional in the industry, should be the responsible entity rather than the individual. The contractor is better equipped to meet the requirements of both applying for permit coverage and developing and properly implementing the plans needed to comply with the permit. However, property owners would also meet the definition of "operator" and require permit coverage in instances where they perform any of the required tasks on their personal properties.

- *"Owner" and "Contractor" as "Operators" - co-permittees.* The owner retains control over any changes to site plans, BMPPs, or wastewater conveyance or control designs, but the contractor is responsible for conducting and overseeing the actual activities (e.g., excavation, installation and operation of treatment train, etc.) and daily implementation of BMPP and other permit conditions. In this case, **both** parties need to apply for coverage.

Generally, a person would not be considered an "operator," and subsequently would not need permit coverage, if: 1) that person is a subcontractor hired by, and under the supervision of, the owner or a general contractor (e.g., if the contractor directs the subcontractor's activities on-site, it is probably not an operator); or 2) the person's activities would otherwise result in the need for coverage under the RGP but another operator has legally assumed responsibility for the impacts of project activities.

A. Instructions for the Suggested Notice of Intent (NOI) - At a minimum, the Notice of Intent must include the following for each individual facility or site. Additional information may be attached as needed.

1. General facility/site information.

a) Provide the **facility/site** name, mailing address, and telephone and fax numbers. Provide the facility SIC code(s). Provide the site location, including longitude and latitude.
b) Provide the property **owner's** name, address, email address, telephone and fax numbers, if different from the site information. Indicate whether the owner is a Federal, State, Tribal, private, or other entity.
c) Provide the site **operator's** (e.g., contractor's) name, mailing address, telephone and fax numbers, and email address if different from the owner's information.
d) For the site for which the application is being submitted, indicate whether:
1) a prior NPDES permit exclusion has been granted for the discharge (if so, provide the tracking number of the exclusion letter);

2) a prior NPDES application (Form 1 & 2C) has ever been filed for the discharge (if so, provide the tracking number and date that the application was submitted to EPA);
3) the discharge is a "new discharge" as defined by 40 CFR 122.2; and
4) for sites in Massachusetts, is the discharge covered under the MA Contingency Plan (MCP) and exempt from state permitting.

e) Indicate whether there is any ongoing state permitting, licensing, or other action regarding the facility or site which is generating the discharge. If "yes," provide any site identification number assigned by the state of NH or MA, any permit or license number assigned, and the state agency contact information (e.g. name, location, telephone no.).

f) Indicate whether or not the facility is covered by other EPA permits including: the multi-sector storm water general permit; the Phase I or II Construction Storm Water General Permit; an individual NPDES permit; or, any other water quality-related individual or general permit. If so, provide permit tracking number(s).

2. Discharge information.

a) Describe the discharge activities to be covered by the permit. Attach additional sheets as needed.

b) Provide the following information about each discharge:
1) the number of discharge points;
2) the **maximum** and **average flow rate** of the discharge in cubic feet per second. For the average flow magnitude, include the units and appropriate notation if this value is a calculated design value or estimate if technical/design information is not available;
3) the latitude and longitude of each discharge with an accuracy of 100 feet (see EPA's siting tool at: http://www.epa.gov/tri/report/siting_tool/);
4) the total volume of potential discharge (gal), only if hydrostatic testing;
5) indication whether the discharge(s) is intermittent or seasonal and if ongoing.

c) Provide the expected start and end dates of discharge (month/day/year)

d) Attach a line drawing or flow schematic showing water flow through the facility including:
1) sources of intake water;
2) contributing flow from the operation;
3) treatment units; and
4) discharge points and receiving waters(s).

3. Contaminant information. In order to complete section I.3. of the NOI, the applicant will need to take a minimum of one sample of the untreated water and have it analyzed for **all** of the parameters listed in Appendix III. The applicant may use historical data as a substitute for the new sample if the data was collected no more than 2 years prior to the effective date of the permit and if collected pursuant to: i. Massachusetts' regulations 310 CMR 40.0000, the Massachusetts Contingency Plan ("Chapter 21E"); ii. New Hampshire's Title 50 RSA 485-A: Water Pollution and Waste Disposal or Title 50 RSA 485-C: Groundwater Protection Act; or iii. an EPA permit exclusion letter issued pursuant to 40 CFR 122.3, and was analyzed with the test methods required by this permit. Otherwise, a new sample shall be taken and analyzed.

a) Based on the analysis of the sample(s) of the untreated influent, the applicant must indicate which of the sub-categories (listed in Table V of Part I.C of the permit) that the potential discharge falls within.
b) Based on the analysis of the untreated influent, the applicant must indicate whether each listed chemical is **believed present** or **believed absent** in the potential discharge.

Based on the required sampling and analysis, the applicant must fill in the table, or provide a narrative description, with the following additional information for each chemical that is **believed present**:

1) the number of samples taken (minimum of one sample);
2) the type of sample (e.g. grab, composite, etc.);
3) the analytical method used, including the method number;
4) the minimum level (ML) of the method used (based on Appendix VI);
5) the maximum daily amount (concentration, ug/l, and mass, kg) of each pollutant, based on the sampling data (see Appendix VIII instructions for sample mass calculations); and
6) the average daily amount (concentration and mass) of each pollutant, based on the sampling data.

If the results of the required sampling indicate that pollutants exist in addition to those listed in Appendix III of the RGP of the permit, the applicant must also describe those contaminants on the NOI in boxes in section I.3.b) on the line marked "Other," or using additional sheets as needed. Subsequently, EPA will decide if the RGP can apply or if an individual permit is necessary.

c) Determination of Reasonable Potential and Allowable Dilution for Discharges of Metals:
If any ***metals*** are believed present in the potential discharge to freshwater[3], the applicant must follow the 2 step calculation procedures described below to determine the reasonable potential for exceedance of water quality standards and dilution factor for each metal.

Step 1: Initial Evaluation

1) The applicant must evaluate all metals believed present in the discharge subject to this permit, including "naturally occurring" metals such as dissolved and/or total Iron. Applicants must enter the highest detected concentration of the metal at zero dilution in the "Maximum value" column of the NOI.

2) Based on the maximum concentration of each metal, the applicant must perform an initial evaluation assuming zero dilution in the receiving water. The applicant must compare the metals concentrations in the untreated (intake) waters to the limits contained in Appendix III.

i. If potential discharges (untreated influent) with metals contain concentrations above the concentration limits listed in Appendix III , applicant must proceed to step 2.

[3]Dilution factors may be available for discharges to saline waters but only with approval of the flow modeling information from the State prior to the submission of the NOI.

ii. If potential discharges (untreated influent) with metals contain concentrations below the concentrations listed in Appendix III, the applicant may skip step 2 and those metals will **not** be subject to permit limitations or monitoring requirements.

Step 2: Calculation of Dilution Factor

1) **For applicants in NH**: If a metal concentration in a potential discharge (untreated influent) to **freshwater**[3] exceeds the limits in Appendix III with zero dilution, the applicant shall evaluate the potential concentration considering a dilution factor (DF) using the formula below. **For sites in New Hampshire, the applicant must contact NH DES to determine the 7Q10 and dilution factor.**

$$DF = [(Qd + Qs)/Qd] \times 0.9$$

Where:	**DF**	**= Dilution Factor**
	Qd	**= Maximum flow rate of the discharge in cubic feet per second (cfs) (1.0 gpm = .00223 cfs)**
	Qs	**= Receiving water 7Q10 flow, in cfs, where,**
	7Q10	**= The annual minimum flow for 7 consecutive days with a recurrence interval of 10 years**
	0.9	**= Allowance for reserving 10% of the assets in the receiving stream as per Chapter ENV-Ws 1700, Surface Water Quality Regulations**

i. Using the DF calculated from the formula above, the applicant must refer to the corresponding DF range column in Appendix IV. The applicant then compares the maximum concentration of the metal entered on the NOI to the corresponding total recoverable metals limits listed in Appendix IV.

1. If a metal concentration in the potential discharge (untreated influent) is less than the corresponding limit in Appendix IV, the metal will **not** be subject to permit limitations or monitoring requirements.
2. If a metal concentration in the potential discharge (untreated influent) is equal to or exceeds the corresponding limit in Appendix IV, the applicant must reduce it in the effluent to a concentration below the applicable total recoverable metals limit in Appendix IV prior to discharge.

ii. In either case, the applicant must submit the results of this calculation as part of the NOI. EPA and NH DES will review the proposed effluent limitations for each metal and approve or disapprove the limits in the notification of coverage letter to the applicant.

2) **For applicants in MA**: If a metal concentration in a in a potential discharge (untreated influent) to **freshwater**[3] exceeds the limits in Appendix III with zero dilution, the applicant must evaluate the potential concentration considering a dilution factor (DF) using the formula below.

DF = (Qd + Qs)/Qd

Where:	**DF**	**= Dilution Factor**
	Qd	**= Maximum flow rate of the discharge in cubic feet per second (cfs) (1.0 gpm = .00223 cfs)**
	Qs	**= Receiving water 7Q10 flow (cfs) where,**
	7Q10	**= The minimum flow (cfs) for 7 consecutive days with a recurrence interval of 10 years**

i. The applicant may estimate the 7Q10 for a receiving water by using available information such as nearby USGS stream gauging stations directly or by application of certain "flow factors," using historic streamflow publication information, calculations based on drainage area, information from state water quality offices, or other means. In many cases the states of MA have calculated 7Q10 information using "flow factors" for a number of streams in the state. The source of the low flow value(s) used by the applicant must be included on NOI application form. Flow data can also be obtained from web applications such as STREAMSTATS located at: http://ma.water.usgs.gov/streamstats/.

ii. Using the DF calculated from the formula above, the applicant must refer to the corresponding DF range column in Appendix IV. The applicant then compares the maximum concentration of each metal entered on the NOI to the corresponding total recoverable metals limit listed in Appendix IV.

1. If a metal concentration in the potential discharge (untreated influent) is less than the corresponding limit in Appendix IV, the metal will **not** be subject to permit limitations or monitoring requirements.
2. If a metal concentration in a potential discharge (untreated influent) is equal to or exceeds the corresponding limit in Appendix IV, the applicant must reduce it in the effluent to a concentration below the applicable total recoverable metals limit in Appendix IV prior to discharge.

iii. The applicant must submit the results of this calculation as part of the NOI. EPA (and MA DEP where the discharge not covered by 310 CMR 40.0000) will review the proposed effluent limitations for each metal and approve or disapprove the limits in the notification of coverage letter to the applicant.

4. Treatment system information.

a) Describe the treatment train for each discharge and attach a schematic of the proposed or existing treatment system.

b) Identify each major treatment unit (e.g. frac tanks, filters, air stripper, liquid phase/vapor phase activated carbon, oil/water separators, etc.) by checking all that apply and describing any additional equipment not listed. Provide a written description of how the system train will be set up. Attach additional sheets as needed.

c) Provide the proposed **average** and **maximum flow** rates (in gallons per minute, gpm) for the discharge and the **design flow** rates (in gpm) of the treatment system. Clearly identify the component of the treatment with the most limited flow, i.e., the part of the treatment train that establishes the **design flow**.
d) Describe any chemical additives being used, or planned to be used, and attach MSDS sheets for each. EPA may request further information regarding the chemical composition of the additive, potential toxic effects, or other information to insure that approval of the use of the additive will not cause or contribute to a violation of State water quality standards. Approval of coverage under the RGP will constitute approval of the use of the chemical additive(s). If coverage of the discharge under the RGP has already been granted and the use of a chemical additive becomes necessary, the permittee must submit a Notice of Change (NOC).

5. Receiving surface water(s) information.
a) Identify the discharge pathway by checking whether it is discharged: directly to the receiving water, within the facility (e.g., through a sewer drain), to a storm drain, to a river or brook, to a wetland, or other receiving body.
b) Provide a narrative description of the discharge pathway, including the name(s) of the receiving waters into which discharge will occur.
c) Provide a detailed map(s) indicating the location of the site and outfall to the receiving water:
1) For multiple discharges, the discharges should be numbered sequentially.
2) In the case of indirect dischargers (to municipal storm sewer, etc) the map(s) must be sufficient to indicate the location of the discharge to the indirect conveyance and the discharge to the state classified surface water. The map should also include the location and distance to the nearest sanitary sewer as well as the locus of nearby sensitive receptors (based on USGS topographical mapping), such as surface waters, drinking water supplies, and wetland areas.
d) Provide the state water quality classification of the receiving water and the basin;
e) Specify the reported seven day-ten year low flow (7Q10) of the receiving water (see Section I.A.3)c. above). In New Hampshire, the 7Q10 must be provided by to the applicant by the New Hampshire Department of Environmental Services.
f) Indicate whether the receiving water is a listed 303(d) water quality impaired or limited water and if so, for which pollutants (see Section VII.H. of the Fact Sheet for additional information). Also, indicate if there is a TMDL for any of the listed pollutants. For MA, the list of waters can be found at: http://www.mass.gov/dep/brp/wm/tmdls.htm and for NH: http://www.epa.gov/ne/eco/tmdl/impairedh2o.html. For more information, contact the states at: New Hampshire Department of Environmental Services, Watershed Management Bureau at 603-271-3503 or the Massachusetts Department of Environmental Protection at 508-767-2796 or 508-767-2873;

6. Consultation with Federal Services - As required in Part I.A.4 and Appendix VII the operator of a site/facility must ensure that the potential discharge will not affect adversely endangered species, designated critical habitat, or essential fish habitat, or national historic places that are in proximity to the potential discharge. If the potential discharge is to certain water bodies, the applicant must also submit a formal certification with the NOI that indicates the consultation, with the U.S. Fish and Wildlife Service and National Marine Fisheries Service (the Services), resulted in either a no jeopardy opinion or a written concurrence on a finding that the discharges are not likely to adversely affect any endangered species or critical habitat. Facilities should begin the

consultation as early in the process as possible.

a) Indicate whether any listed threatened or endangered species, designated critical habitat, or essential fish habitat, are in proximity to the discharge to be covered by this permit and whether any consultation with the Services is complete or underway.
b) Indicate whether or not there are any historic properties listed or eligible for listing on the National Register of Historic Places located on the facility or site or in proximity to the discharge (see http://www.cr.nps.gov/nr/research/nris.htm), and whether any state or tribal historic preservation officer (SHPO or THPO) was consulted in such a determination (for Massachusetts sites only).

7. Supplemental information. Applicants should provide any supplemental information needed to meet the requirements of the permit, including, any analytical data used to support the application, and any certification(s) required.

8. Signature Requirements - The Notice of Intent must be signed by the operator in accordance with the signatory requirements of 40 CFR Section 122.22, including the following certification:

> *I certify under penalty of law that this document and all attachments were prepared under my direction or supervision in accordance with a system designed to assure that qualified personnel properly gather and evaluate the information submitted. Based on my inquiry of the person or persons who manage the system, or those persons directly responsible for gathering the information, I certify that the information submitted is, to the best of my knowledge and belief, true, accurate, and complete. I certify that I am aware that there are significant penalties for submitting false information, including the possibility of fine and imprisonment for knowing violations.*

B. Suggested Form for Notice of Intent (NOI) for the Remediation General Permit

1. **General site information**. Please provide the following information about the site:

a) Name of **facility/site**: Bella Costa Restaurant		**Facility/site** address:		
Location of **facility/site**: longitude: 71° 24' 24" latitude: 42° 18' 04"	Facility SIC code (s): 5812 - Restaurant	Street: 147 Cochituate Road		
b) Name of facility/site **owner**: Andrew Karpouzis		Town: Framingham		
Email address of owner: N/A		State: MA	Zip: 01701	County: Middlesex
Telephone no. of facility/site **owner**: N/A				
Fax no. of facility/site **owner**: N/A		**Owner** is (check one) 1. Federal ☐ 2. State/Tribal ☐ 3. Private ☒ 4. other, ☐ if so, describe:		
Address of **owner** (if different from site):				
Street: 147 Cochituate Road				
Town: Framingham	State: MA	Zip: 01701	County: Middlesex	
c.) Legal name of **operator**: Motiva Enterprises LLC	**Operator** telephone no.: 845-462-5225			
	Operator fax no.: 845-462-4999		**Operator** email: David.Weeks@Shell.com	
Operator contact name and title: David Weeks, Senior Environmental Engineer				
Address of **operator** (if different from owner):	Street: 1830 South Road, Unit 24, PMB 301			
Town: Wappingers Falls	State: NY	Zip: 12590	County: Dutchess	

d) Check "yes" or "no" for the following:

1. Has a prior NPDES permit exclusion been granted for the discharge? Yes ☒ No ☐, if "yes," number: MA-04I-031
2. Has a prior NPDES application (Form 1 & 2C) ever been filed for the discharge? Yes ☐ No ☒, if "yes," date and tracking #:
3. Is the discharge a "new discharge" as defined by 40 CFR 122.2? Yes ☐ No ☒
4. For sites in Massachusetts, is the discharge covered under the MA Contingency Plan (MCP) and exempt from state permitting? Yes ☒ No ☐

e) Is site/facility subject to any State permitting or other action which is causing the generation of discharge? Yes ☐ No ☒, If "yes," please list: 1. site identification # assigned by the state of NH or MA: 2. permit or license # assigned: 3. state agency contact information: name, location, and telephone number:	f) Is the site/facility covered by any other EP A permit, including: 1. multi-sector storm water general permit? Yes ☐ No ☒, if Y, number: 2. phase I or II construction storm water general permit? Yes ☐ No ☒, if Y, number: 3. individual NPDES permit? Yes ☐ No ☒, if Y, number: 4. any other water quality related permit? Yes ☐ No ☒, if Y, number:

2. **Discharge information**. Please provide information about the discharge, (attaching additional sheets as needed) including:

a) Describe the discharge activities for which the owner/applicant is seeking coverage: Groundwater treatment at restaurant associated with remediation of Shell Service Station located at 846 Concord Street, Framingham, MA.		
b) Provide the following information about each discharge:	1) Number of discharge points: 1	2) What is the **maximum** and **average flow rate** of discharge (in cubic feet per second, W/s)? Max. flow 0.03345 ft^3/sec Average flow 0.0156 ft^3/sec Is maximum flow a **design value**? Yes ☐ No ☒, For average flow, include the units and appropriate notation if this value is a design value or estimate if not available. Average flow 0.0156 ft^3/sec (based on historical operations)
3) Latitude and longitude of each discharge within 100 feet: pt.l :long. 71 °24'30" lat. 42° 18' 62" ; pt.2: long. ___ lat. ___ ; pt.3: long. ___ lat. ___ ; pt.4:long. ___ lat. ___ ; pt.5: long. ___ lat. ___ ; pt.6:long. ___ lat. ___ ; pt.7: long. ___ lat. ___ ; pt.8:long. ___ lat. ___ ; etc.		

4) If hydrostatic testing, total volume of the discharge (gals): N/A	5) Is the discharge intermittent ☒ Or seasonal ☐ ? Is discharge ongoing Yes ☒ No ☐,?
c) Expected dates of discharge (mm/dd/yy): start 01/19/04 end unknown	
d) Please attach a line drawing or flow schematic showing water flow through the facility including: See attached figures. 1. sources of intake water, 2. contributing flow from the operation, 3. treatment units, and 4. discharge points and receiving waters(s).	

3. Contaminant information. In order to complete this section, the applicant will need to take a minimum of one sample of the untreated water and have it analyzed for all of the parameters listed in Appendix III. Historical data, (i.e., data taken no more than 2 years prior to the effective date of the permit) may be used if obtained pursuant to: i. Massachusetts' regulations 310 CMR 40.0000, the Massachusetts Contingency Plan ("Chapter 2lE"); ii. New Hampshire's Title 50 RSA 485-A: Water Pollution and Waste Disposal or Title 50 RSA 485-C: Groundwater Protection Act; or iii. an EPA permit exclusion letter issued pursuant to 40 CFR 122.3, provided the data was analyzed with test methods that meet the requirements of this permit. Otherwise, a new sample shall be taken and analyzed.

a) Based on the analysis of the sample(s) of the untreated influent, the applicant must check the box of the sub-categories that the potential discharge falls within.

Gasoline Only ☒	VOC Only ☐	Primarily Metals ☐	Urban Fill Sites ☐	Contaminated Sumps ☐	Mixed Contaminants ☐	Aquifer Testing ☐
Fuel Oils (and Other Oils) only ☐	VOC with Other Contaminants ☐	Petroleum with Other Contaminants ☐	Listed Contaminated Sites ☐	Contaminated Dredge Condensates ☐	Hydrostatic Testing of Pipelines/Tanks ☐	Well Development or Rehabilitation ☐

b) Based on the analysis of the untreated influent, the applicant must indicate whether each listed chemical is believed present or believed absent in the potential discharge. Attach additional sheets as needed.

PARAMETER	Believe Absent	Believe Present	#of Samples (1 min-imum)	Type of Sample (e.g., grab)	Analytical Method Used (method #)	Minimum Level (ML) of Test Method (ug/l)	Maximum daily value		Avg. daily value	
							concentration (ug/l)	mass ~~(kg)~~ (kg/day)	concentration (ug/l)	mass ~~(kg)~~ (kg/day)
1. Total Suspended Solids		√	1	GRAB	160.2	1000	19000	1.556		
2. Total Residual Chlorine	√		1	GRAB	330.5	400	<400	<0.0328		
3. Total Petroleum Hydrocarbons		√	1	GRAB	1664A	2000	<2000	<0.1638		
4. Cyanide	√		1	GRAB	335.3	10	<10	<8.19 E-4		
5. Benzene		√	1	GRAB	8260B	0.5	0.78	6.39 E-5		
6. Toluene		√	1	GRAB	8260B	1.0	<1.0	<8.19 E-5		
7. Ethylbenzene		√	1	GRAB	8260B	1.0	<1.0	<8.19 E-5		
8. (m,p,o) Xylenes		√	1	GRAB	8260B	1.0	<1.0	<8.19 E-5		
9. Total BTEX[4]		√	1	GRAB	8260B	-----	0.78	6.39 E-5		

[4]BTEX = Sum of Benzene, Toluene, Ethylbenzene, total Xylenes.

PARAMETER	Believe Absent	Believe Present	# of Samples (1 min-imum)	Type of Sample (e.g., grab)	Analytical Method Used (method #)	Minimum Level (ML) of Test Method (ug/l)	Maximum daily value		Avg. daily value	
							concentration (ug/l)	mass ~~(kg)~~ (kg/day)	concentration (ug/l)	mass ~~(kg)~~ (kg/day)
10. Ethylene Dibromide (1,2- Dibromo-methane)	√		1	GRAB	504.1	0.015	<0.015	<1.2 E-6		
11. Methyl-tert-Butyl Ether (MtBE)		√	1	GRAB	8260B	1.0	1.3	1.06 E-4		
12. tert-Butyl Alcohol (TBA)	√		1	GRAB	8260B	100	<100	<0.00818		
13. tert-Amyl Methyl Ether (TAME)	√		1	GRAB	8260B	2.0	<2.0	<1.64 E-4		
14. Naphthalene	√		1	GRAB	8270C SIM	0.10	<0.10	<8.19 E-6		
15. Carbon Tetra-chloride	√		1	GRAB	8260B	1.0	<1.0	<8.19 E-5		
16. 1,4 Dichlorobenzene	√		1	GRAB	8260B	1.0	<1.0	<8.19 E-5		
17.1,2 Dichlorobenzene	√		1	GRAB	8260B	1.0	<1.0	<8.19 E-5		
18. 1,3 Dichlorobenzene	√		1	GRAB	8260B	1.0	<1.0	<8.19 E-5		
19. 1,1 Dichloroethane	√		1	GRAB	8260B	1.0	<1.0	<8.19 E-5		
20. 1,2 Dichloroethane	√		1	GRAB	8260B	1.0	<1.0	<8.19 E-5		
21. 1,1 Dichloroethylene	√		1	GRAB	8260B	1.0	<1.0	<8.19 E-5		
22. cis-l,2 Dichloro-ethylene	√		1	GRAB	8260B	1.0	<1.0	<8.19 E-5		
23. Dichloromethane (Methylene Chloride)	√		1	GRAB	8260B	2.0	<2.0	<1.64 E-4		
24. Tetrachloroethylene	√		1	GRAB	8260B	1.0	<1.0	<8.19 E-5		

PARAMETER	Believe Absent	Believe Present	# of Samples (1 min-imum)	Type of Sample (e.g., grab)	Analytical Method Used (method #)	Minimum Level (ML) of Test Method (ug/l)	Maximum daily value		Avg. daily Value	
							concentration (ug/l)	mass ~~(kg)~~ (kg/day)	concentration (ug/l)	mass ~~(kg)~~ (kg/day)
25. 1,1,1 Trichloroethane	√		1	GRAB	8260B	1.0	<1.0	<8.19 E-5		
26. 1,1,2 Trichloroethane	√		1	GRAB	8260B	1.0	<1.0	<8.19 E-5		
27. Trichloroethylene	√		1	GRAB	8260B	1.0	<1.0	<8.19 E-5		
28. Vinyl Chloride	√		1	GRAB	8260B	1.0	<1.0	<8.19 E-5		
29. Acetone	√		1	GRAB	8260B	5.0	<5.0	<4.09 E-4		
30. 1,4 Dioxane	√		1	GRAB	8260B	25	<25	<0.0020		
31. Total Phenols	√		1	GRAB	8270C	See Lab Data	See Lab Data (Non Detect)	-----		
32. Pentachlorophenol	√		1	GRAB	8270C SIM	1.0	<1.0	<8.19 E-5		
33. Total Phthalates [6] (phthalate esthers)	√		1	GRAB	8270C	10	<10	<8.19 E-4		
34. Bis (2-Ethylhexyl) Phthalate [Di-(ethylhexyl) Phthalate]	√		1	GRAB	8270C	10	<10	<8.19 E-4		
35. Total Group I Polycyclic Aromatic Hydrocarbons (PAH)	√		1	GRAB	8270C	See Lab Data	See Lab Data (Non Detect)	------		
a. Benzo(a) Anthracene	√		1	GRAB	8270C	0.051	<0.051	<4.2 E-6		
b. Benzo(a) Pyrene	√		1	GRAB	8270C	0.10	<0.10	<8.19 E-6		
c. Benzo(b)Fluoranthene	√		1	GRAB	8270C	0.051	<0.051	<4.2 E-6		
d. Benzo(k) Fluoranthene	√		1	GRAB	8270C	0.10	<0.10	<8.19 E-6		
e. Chrysene	√		1	GRAB	8270C	0.10	<0.10	<8.19 E-6		

[6] The sum of individual phthalate compounds.

PARAMETER	Believe Absent	Believe Present	#of Samples (1 min-imum)	Type of Sample (e.g., grab)	Analytical Method Used (method #)	Minimum Level (ML) of Test Method (ug/l)	Maximum daily value		Average daily value	
							concentration (ug/l)	mass ~~(kg)~~ (kg/day)	concentration (ug/l)	mass ~~(kg)~~ (kg/day)
f. Dibenzo(a,h) anthracene	√		1	GRAB	8270C	0.10	<0.10	<8.19 E-6		
g. Indeno(1,2,3-cd) Pyrene	√		1	GRAB	8270C	0.10	<0.10	<8.19 E-6		
36. Total Group II Polycyclic Aromatic Hydrocarbons (pAR)	√		1	GRAB	8270C	0.10	<0.10	<8.19 E-6		
h. Acenaphthene	√		1	GRAB	8270C	0.10	<0.10	<8.19 E-6		
i. Acenaphthylene	√		1	GRAB	8270C	0.10	<0.10	<8.19 E-6		
j. Anthracene	√		1	GRAB	8270C	0.10	<0.10	<8.19 E-6		
k. Benzo(ghi) Perylene	√		1	GRAB	8270C	0.10	<0.10	<8.19 E-6		
I. Fluoranthene	√		1	GRAB	8270C	0.10	<0.10	<8.19 E-6		
m. Fluorene	√		1	GRAB	8270C	0.10	<0.10	<8.19 E-6		
n. Naphthalene-	√		1	GRAB	8270C	0.10	<0.10	<8.19 E-6		
o. Phenanthrene	√		1	GRAB	8270C	0.10	<0.10	<8.19 E-6		
p. Pyrene	√		1	GRAB	8270C	0.10	<0.10	<8.19 E-6		
37. Total Polychlorinated Biphenyls (PCBs)	√		1	GRAB	608	0.2 - 0.4	<0.2 - <0.4	<1.64 E-5 - <3.28 E-5		
38. Antimony	√		1	GRAB	3113B	5.0	<5.0	<4.09 E-4		
39. Arsenic	√		1	GRAB	3010A-6010B	5.0	<5.0	<4.09 E-4		
40. Cadmium		√	1	GRAB	3113B	0.5	1.7	1.39 E-4		
41. Chromium III (1)		√	1	GRAB	Calculated	-----	10	8.19 E-4		
42. Chromium VI	√		1	GRAB	7196A	10	<10	<8.19 E-4		

NOTES: (1) Chromium III = Total Chromium – Hexavalent Chromium

PARAMETER	Believe Absent	Believe Present	#of Samples (1 min-imum)	Type of Sample (e.g., grab)	Analytical Method Used (method #)	Minimum Level (ML) of Test Method (ug/l)	Maximum daily value		Avg. daily value	
							concentration (ug/l)	mass ~~(kg)~~ (kg/day)	concentration (ug/l)	mass ~~(kg)~~ (kg/day)
43. Copper		√	1	GRAB	3010A-6010B	20	40	0.0033		
44. Lead		√	1	GRAB	3113B	2	8.0	0.0007		
45. Mercury	√		1	GRAB	7470A	0.20	<0.20	<1.64 E-5		
46. Nickel		√	1	GRAB	200.7	5	11	0.0009		
47. Selenium	√		1	GRAB	3113B	5	<5.0	4.09 E-4		
48. Silver		√	1	GRAB	3113B	0.5	1.2	9.85E-5		
49. Zinc		√	1	GRAB	200.7	20	80	0.0066		
50. Iron		√	1	GRAB	3010A/6010B	50	6260	0.5126		
Other (describe):	----	----	----	----	----	----	----	----	----	----

c. For discharges where **metals** are believed present, please fill out the following:

Step 1: Do any of the metals in the influent have a reasonable potential to exceed the effluent limits in Appendix III (i.e., the limits set at zero to five dilutions)? Y ☒ N ☐	If yes, which metals? Cd, Cu, Pb, Zn, Fe.
Step 2: For any metals which have **reasonable potential** to exceed the **Appendix III** limits, calculate the **dilution factor (DF)** using the formula in Part I.A.3.c) (step 2) of the NOI instructions or as determined by the State prior to the submission of this NOI. What is the dilution factor for applicable metals? Metals: Cd, Cu, Pb, Zn, Fe. DF: 1.00.	Look up the limit calculated at the corresponding dilution factor in **Appendix IV**. Do any of the metals in the **influent** have the potential to exceed the corresponding **effluent** limits in Appendix IV (i.e., is the influent concentration above the limit set at the calculated dilution factor)? Y ☒ N ☐ If "Yes," list which metals: Cd, Cu, Pb, Zn, Fe.

4. Treatment system information. Please describe the treatment system using separate sheets as necessary, including:

a) A description of the treatment system, including a schematic of the proposed or existing treatment system:
Groundwater is extracted from a recovery well and treated by two bag filters and two granular activated carbon units. See Figure 1.

b) Identify each applicable treatment unit (check all that apply):	Frac. tank ☐	Air stripper ☐	Oil/water separator ☐	Equalization tanks ☐	Bag filter ☒	GAC filter ☒
	Chlorination ☐	Dechlorination ☐	Other (please describe):			

c) Proposed **average** and **maximum flow rates** (gallons per minute) for the discharge and the **design flow rate**(s) (gallons per minute) of the treatment system:

Average flow rate of discharge 7 GPM Maximum flow rate of treatment system 15 GPM Design flow rate of treatment system 15 GPM

d) A description of chemical additives being used or planned to be used (attach MSDS sheets): Not Applicable

5. Receiving surface water(s). Please provide information about the receiving water (s) using separate sheets as necessary, including:

a) Identify the discharge pathway:	Direct ☐	Within facility ☐	Storm drain ☒	River/brook ☐	Wetlands ☐	Other (describe):

b) Provide a narrative description of the discharge pathway, including the name(s) of the receiving waters:
Discharge to Town of Framingham storm sewer conveyance system to Sucker Pond to Sudbury River to Brackett Reservoir (aka Reservoir No. One) to Charles River (Class B). Concord River Basin.

c) Attach a detailed map(s) indicating the site location and location of the outfall to the receiving water:
1. For multiple discharges, number the discharges sequentially.
2. For indirect dischargers, indicate the location of the discharge to the indirect conveyance and the discharge to surface water
The map should also include the location and distance to the nearest sanitary sewer as well as the locus of nearby sensitive receptors (based on USGS topographical mapping), such as surface waters, drinking water supplies, and wetland areas. See Figure 2

d) Provide the state water quality classification of the receiving water Class B (Freshwater) .

e) Provide the reported or calculated seven day-ten year low flow (7QlO) of the receiving water 0.00 cfs

Please attach any calculation sheets used to support stream flow and dilution calculations.

f) Is the receiving water a listed 303(d) water quality impaired or limited water? Yes ☐ No ☐ If yes, for which pollutant(s)? Could not be determined, see attached.

Is there a TMDL? Yes ☐ No ☐ If yes, for which pollutant(s)?

6. Results of Consultation with Federal Services: Please provide the following information according to requirements of Part I.B.4 and Appendices II and VII.

a) Are any listed threatened or endangered species, or designated critical habitat, in proximity to the discharge? Yes ☐ No ☒
Has any consultation with the federal services been completed? Yes ☐ No ☒ or is consultation underway? Yes ☐ No ☒

What were the results of the consultation with the U.S. Fish and Wildlife Service and/or National Marine Fisheries Service (check one): Not applicable

a "no jeopardy" opinion? ☐ or written concurrence ☐ on a finding that the discharges are not likely to adversely affect any endangered species or critical habitat?

b) Are any historic properties listed or eligible for listing on the National Register of Historic Places located on the facility or site or in proximity to the discharge?

Yes ☐ No ☒ Have any state or tribal historic preservation officer been consulted in this determination (Massachusetts only)? Yes ☐ No ☒

7. Supplemental information. :

Please provide any supplemental information. **Attach any analytical data used to support the application**. Attach any certification(s) required by the general permit.

See cover letter.

8. Signature Requirements: The Notice of Intent must be signed by the operator in accordance with the signatory requirements of 40 CFR Section 122.22, including the following certification:

I certify under penalty of law that this document and all attachments were prepared under my direction or supervision in accordance with a system designed to assure that qualified personnel properly gather and evaluate the information submitted. Based on my inquiry of the person or persons who manage the system, or those persons directly responsible for gathering the information, I certify that the information submitted is, to the best of my knowledge and belief, true, accurate, and complete. I certify that I am aware that there are significant penalties for submitting false information, including the possibility of fine and imprisonment for knowing violations.

Facility/Site Name: Bella Costa Restaurant, 147 Cochituate Road, Framingham, MA

Operator signature: _____

Title: David Weeks, Senior Environmental Engineer

Date: _____

B. Submission of NOI to EPA - All operators applying for coverage under this General Permit must submit a written Notice of Intent (NOI) to EPA. Signed and completed NOI forms and attachments must be submitted to EPA-NE at:

US Environmental Protection Agency
RGP-NOC Processing
Municipal Assistance Unit (CMU),
1 Congress Street, Suite 1100
Boston, MA 02114-2023

or electronically mailed to NPDES.Generalpermits@epa.gov,
or faxed to the EPA Office at 617-918-0505.

If filling out the suggested NOI form electronically on EPA's website, the signature page must be signed and faxed or mailed to EPA at the phone number or address listed in Section I.B. below.

1. Filing with the states - A copy of any NOI form filed with EPA-NE must also be filed with state agencies. The state agency may elect to develop a state specific form or other information requirements.

a) Discharges in Massachusetts - In addition to the NOI, permit applicants must submit copies of the State Application Form BRPWM 12, Request for General Permit coverage for the RGP. The application form and the Transmittal Form for Permit Application and Payment, may be obtained from the Massachusetts Department of Environmental Protection (MA DEP) website at www.state.ma.us/dep. Municipalities are fee-exempt, but should send a copy of the transmittal form to that address for project tracking purposes. All applicants should keep a copy of the transmittal form and a copy of the application package for their records.

1) A copy of the NOI, the transmittal form, a copy of the check, and Form BRPWM 12 should be sent to:

Massachusetts Department of Environmental Protection
Division of Watershed Management
627 Main Street, 2nd floor
Worcester, MA 01608

2) A copy of the transmittal form and the appropriate fee should be sent to:

Massachusetts Department of Environmental Protection
P.O. Box 4062
Boston, MA 02111

Please note: Applicants for discharges in Massachusetts should note that under 310 CMR 40.000, *as a matter of state law*, the general permit only applies to discharges that are **not** subject to the Massachusetts Contingency Plan (MCP) and 310 CMR 40.000. Therefore, discharges subject to the MCP are **not** required to fill out and submit the State Application Form BRPWM 12 or pay the state fees. However, they must submit a NOI to EPA.

b) Discharges in New Hampshire - applicants must provide a copy of the Notice of Intent to:

New Hampshire Department of Environmental Services
Water Division
Wastewater Engineering Bureau
P.O. Box 95
Concord, New Hampshire 03302-0095.

2. Filing with Municipalities - A copy of the NOI must be submitted to the municipality in which the proposed discharge would be located.

FIGURES

GWRT SYSTEM PROCESS AND INSTRUMENTATION DIAGRAM

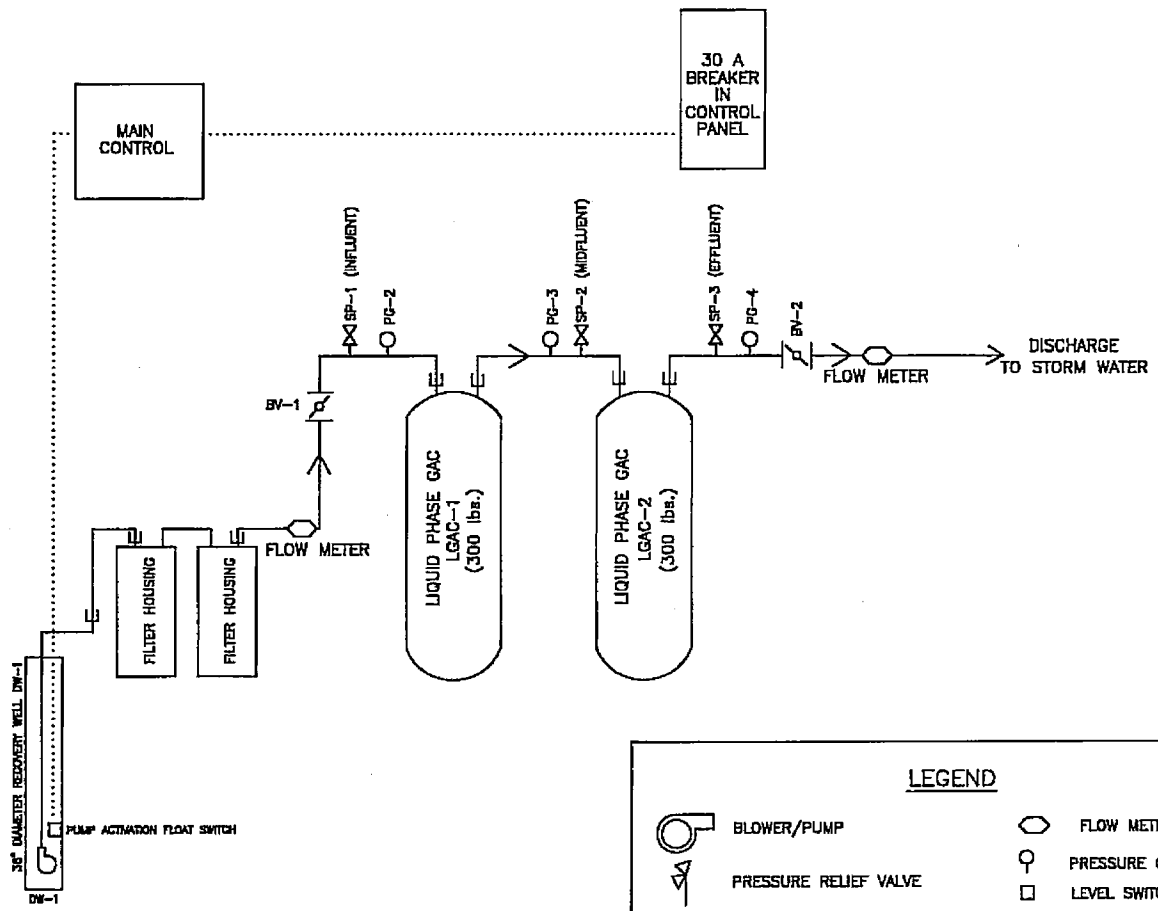

LEGEND

- BLOWER/PUMP
- PRESSURE RELIEF VALVE
- BALL VALVE WITH SAMPLE PORT
- CHECK VALVE / VACUUM BREAKER
- BALL VALVE
- FLOW METER/TRANSMITTER
- PRESSURE GAUGE
- LEVEL SWITCH
- QUICK CONNECT FITTING

FIGURE 1	SYSTEM P&ID DRAWING PREPARED SEPTEMBER 15, 2003 — NOT TO SCALE	BELLA COSTA SYSTEM 147 COCHICUATE ROAD FRAMINGHAM, MASSACHUSETTS	EnviroTrac 1400 PROVIDENCE HIGHWAY, SUITE 2100 NORWOOD, MA 02062 (781) 769-5005

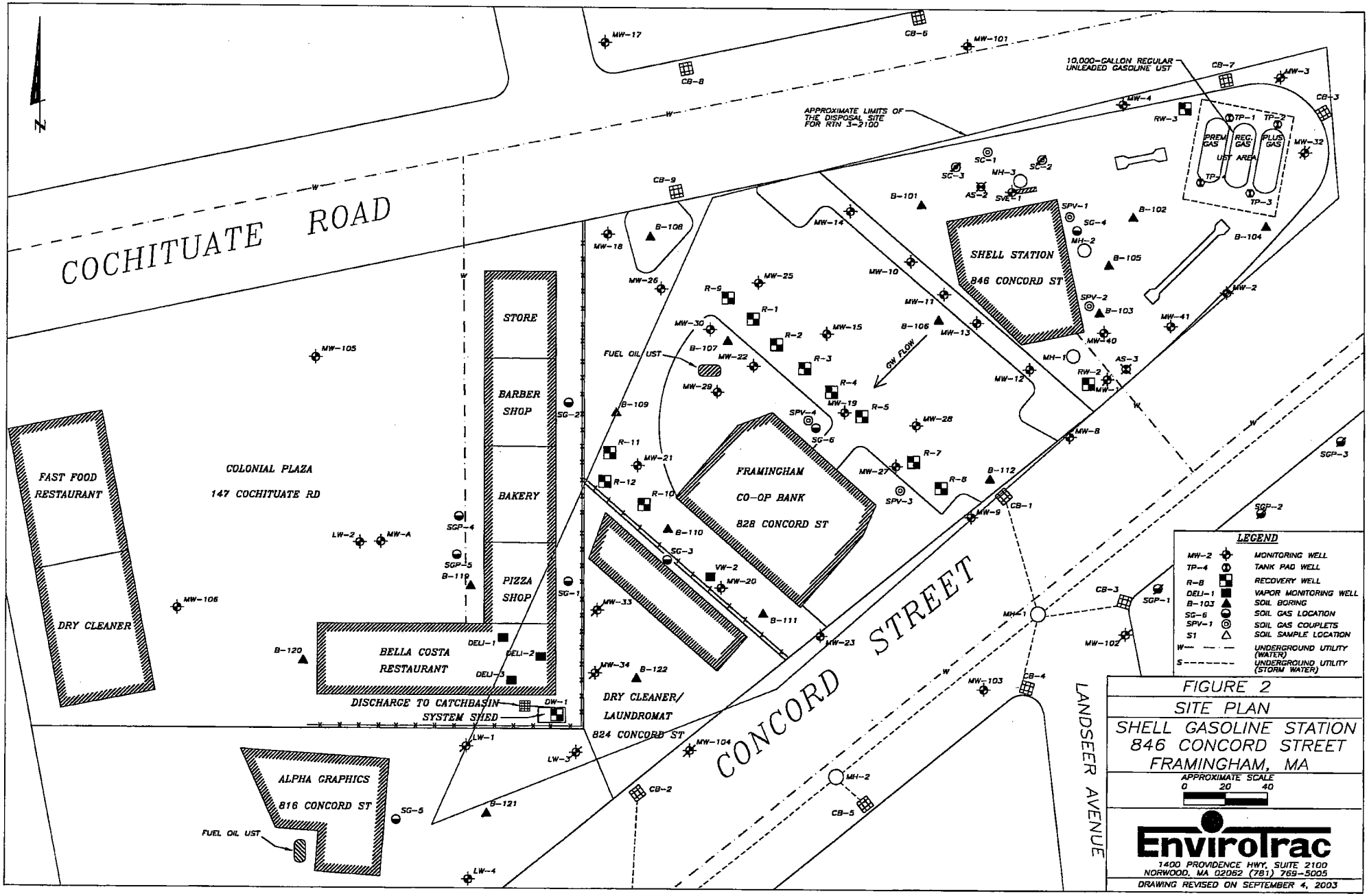

FIGURE 2
SITE PLAN
SHELL GASOLINE STATION
846 CONCORD STREET
FRAMINGHAM, MA

MAPQUEST

846 Concord St
Framingham MA
01701-4611 US

Notes:

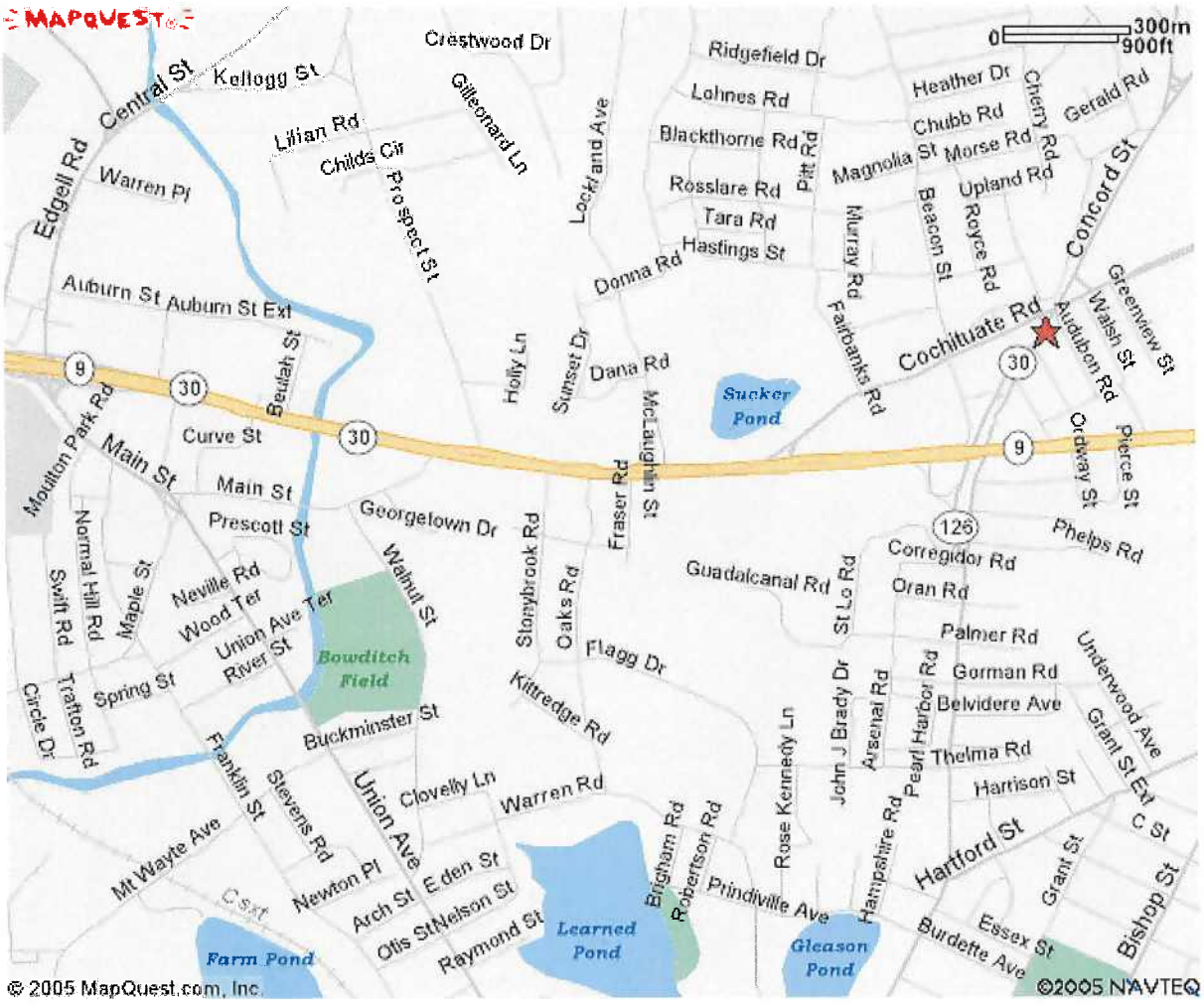

All rights reserved. Use Subject to License/Copyright

This map is informational only. No representation is made or warranty given as to its content. User assumes all risk of use. MapQuest and its suppliers assume no responsibility for any loss or delay resulting from such use.

DILUTION FACTOR CALCULATIONS

DILUTION FACTOR CALCULATION WORKSHEET
NPDES REMEDIATION GENERAL PERMIT - NOTICE OF INTENT FORM

Site: Bella Costa Restaurant
Address: 137 Cochituate Road, Framingham, MA
Receiving Stream: Sucker Pond to Brackett Reservoir to Charles River (Class B).

15 = Maximum flow rate of the discharge (gpm)

Qd = 0.03345 = Maximum flow rate of the discharge in cubic feet per second (cfs), 1.0 gpm = 0.00223 cfs

Qs = 0.00 = Receiving water 7Q10 flow (cfs) where,

7Q10 = The minimum flow (cfs) for 7 consecutive days with a recurrence interval of 10 years

MA Maximum DF = (Qd + Qs) / Qd

Maximum DF = Dilution Factor = 1.0000

NOTE:
Source: USGS, Streamflow Statistics Report, http://ststdmamrl.er.usgs.gov/streamstats/expert.htm

Streamflow Statistics Report

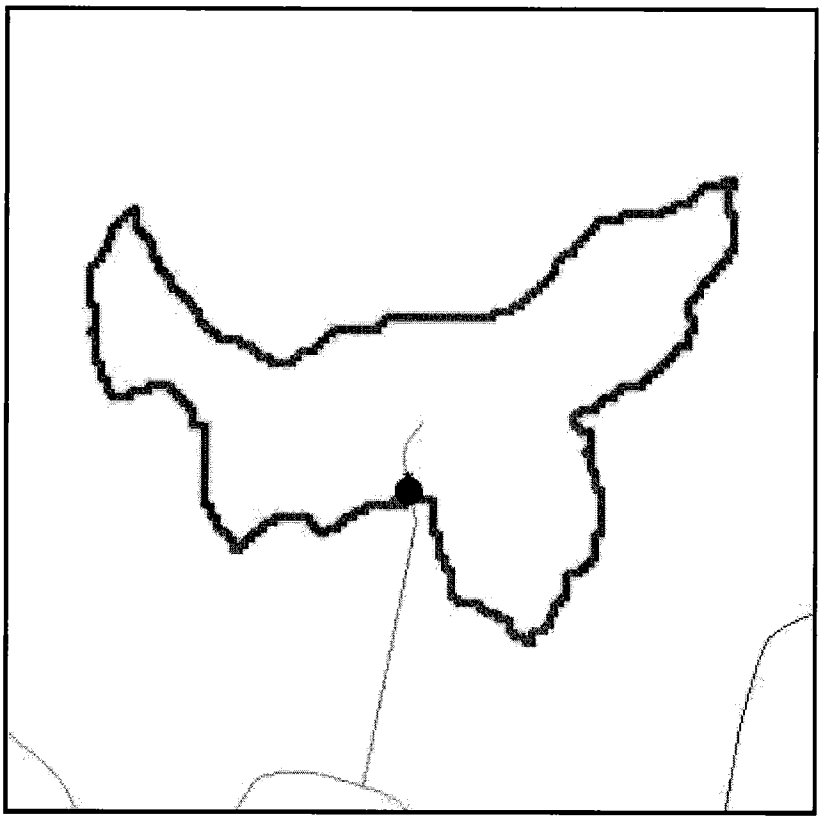

Date: Fri Oct 21 11:37:35 2005
Warning! Drainage Area outside allowable range. Prediction intervals not calculated.
Latitude: 42.2997
Longitude: -71.4151
Measured Basin Characteristics:
Drainage Area (square miles): 0.15
Stratified Drift Area (square miles): 0.09
Stream Length (miles): 0.09
Slope (percent): 0.00
Region: 0

Statistic	Estimated streamflow, ft^3/s	90% Prediction interval	
		Minimum	Maximum
99-percent duration flow	0.00		
98-percent duration flow	0.00		
95-percent duration flow	0.00		

90-percent duration flow	0.00		
85-percent duration flow	0.00		
80-percent duration flow	0.00		
75-percent duration flow	0.07		
70-percent duration flow	0.08		
60-percent duration flow	0.10		
50-percent duration flow	0.14		
7-day, 2-year low flow	0.00		
* **7-day, 10-year low flow**	0.00		
August median flow	0.00		

U.S. Department of the Interior, U.S. Geological Survey
10 Bearfoot Road
Northborough, MA 01532
(508) 490-5000

Maintainer: webmaster@mass1.er.usgs.gov

ENDANGERED SPECIES ACT
TOWN SPECIES LIST

In accordance with Appendix VII of the NPDES Remediation General Permit, it was determined that the four species of concern (**shortnose sturgeon**, **dwarf wedge mussel**, **bog turtle** and the **northern redbelly cooter**) are not present at the facility pursuant to USEPA Endangered Species Act Review Procedures website (http://cfpub.epa.gov.npdes/stormwater/esa.cfm). See attached list.

Town		Taxonomic Group	Scientific Name	Common Name	State Rank	Federal Rank	Most Recent Obs
FRAMINGHAM		Fish	Notropis bifrenatus	Bridle Shiner	SC		1962
FRAMINGHAM	*	Amphibian	Ambystoma laterale	Blue-Spotted Salamander	SC		1989
FRAMINGHAM		Amphibian	Scaphiopus holbrookii	Eastern Spadefoot	T		1852
FRAMINGHAM	*	Reptile	Clemmys guttata	Spotted Turtle	SC		1981
FRAMINGHAM	*	Bird	Vermivora chrysoptera	Golden-Winged Warbler	E		1982
FRAMINGHAM		Mussel	Ligumia nasuta	Eastern Pondmussel	SC		1911
FRAMINGHAM		Beetle	Cicindela duodecimguttata	Twelve-Spotted Tiger Beetle	SC		1907
FRAMINGHAM		Beetle	Cicindela purpurea	Purple Tiger Beetle	SC		1928
FRAMINGHAM		Beetle	Cicindela rufiventris hentzii	Hentz's Redbelly Tiger Beetle	T		1908
FRAMINGHAM		Butterfly/Moth	Apodrepanulatrix liberaria	New Jersey Tea Inchworm	E		1934
FRAMINGHAM		Butterfly/Moth	Metarranthis apiciaria	Barrens Metarranthis Moth	E		1934
FRAMINGHAM		Vascular Plant	Aristida purpurascens	Purple Needlegrass	T		1911
FRAMINGHAM		Vascular Plant	Asclepias purpurascens	Purple Milkweed	E		1885
FRAMINGHAM	*	Vascular Plant	Cyperus engelmannii	Engelmann's Umbrella-Sedge	T		1999
FRAMINGHAM		Vascular Plant	Dichanthelium mattamuskeetense	Mattamuskeet Panic-Grass	E		1892
FRAMINGHAM		Vascular Plant	Prenanthes serpentaria	Lion's Foot	E		1909
FRAMINGHAM		Vascular Plant	Sparganium natans	Small Bur-Reed	E		1890

END

MASSACHUSETTS YEAR 2002 INTEGRATED LIST OF WATERS (303 (d) LIST)

Appendix 2
Waterbody Segments and Integrated List Categories by Major Watershed

NAME	SEGMENT ID	DESCRIPTION	ASSESS DATE	CATEGORY
Sesuit Creek (9661300)	MA96-13_2002	From Route 6A to mouth at Cape Cod Bay, Dennis.	Nov-01	5
Shallow Pond (96285)	MA96285_2002	Barnstable	Feb-98	3
Shawme Lake Lower (96288)	MA96288_2002	Sandwich	Feb-02	3
Sheep Pond (96289)	MA96289_2002	Brewster	Jun-02	5
Shoestring Bay (96905)	MA96-08_2002	Quinaquisset Avenue to Popponesset Bay (line from Ryefield Point, Barnstable to Punkhorn Point, Mashpee, including Gooseberry Island), Barnstable/Mashpee.	May-03	5
Shubael Pond (96293)	MA96293_2002	Barnstable	Dec-93	3
Snake Pond (96302)	MA96302_2002	Sandwich	Feb-02	5
Stage Harbor (96907)	MA96-11_2002	From the outlet of Mill Pond (including Mitchell River) to the confluence with Nantucket Sound at a line from the southernmost point of Harding Beach southeast to the Harding Beach Point , Chatham.	May-03	5
Swan Pond River (9662175)	MA96-14_2002	Outlet of Swan Pond to confluence with Nantucket Sound, Dennis.	Nov-01	5
Taylors Pond (96311)	MA96-42_2002	Chatham.	May-03	5
Upper Mill Pond (96324)	MA96324_2002	Brewster	Feb-02	5
Upper Shawme Lake (96326)	MA96326_2002	Sandwich	Feb-02	3
Village Pond (96329)	MA96329_2002	Truro	Dec-91	3
Wakeby Pond (96346)	MA96346_2002	Mashpee/Sandwich	Sep-96	5
Walkers Pond (96331)	MA96331_2002	Brewster	Feb-02	5
Waquoit Bay (96912)	MA96-21_2002	From mouths of Seapit River, Quashnet River (also known as Moonakis River), and Great River to confluence with Vineyard Sound, Falmouth/Mashpee.	Nov-01	5
Wellfleet Harbor (96916)	MA96-34_2002	The waters north of an imaginary line drawn east from the southern tip of Jeremy Point, Wellfleet to Sunken Meadow, Eastham excluding the estuaries of Herring River, Duck Creek, Blackfish Creek, and Fresh Brook, Wellfleet.	Nov-01	5
Wequaquet Lake (96333)	MA96333_2002	Barnstable	Feb-02	5
West Bay (96927)	MA96-65_2002	south of the Bridge Street bridge to Nantucket Sound including Eel River, Barnstable.	May-03	5
Charles				
Alder Brook (7239475)	MA72-22_2002	Headwaters northwest of the Needham Reservoir, south of Penn Central railroad tracks, to confluence with Charles River, Needham.	Dec-98	5
Lake Archer (72002)	MA72002_2002	Wrentham	Oct-98	2
Beaver Brook (7240350)	MA72-12_2002	Outlet Beaver Pond north of Route 126 (Hartford Avenue) to confluence with Charles River, Bellingham. Miles 1.7-0.0	Nov-98	3
Beaver Brook (7239125)	MA72-28_2002	Headwaters, south of Route 2, Lexington through culverting to Charles River, Waltham.	Dec-98	5
Beaver Pond (72004)	MA72004_2002	Bellingham/Milford	Oct-98	3
Bogastow Brook (7239775)	MA72-16_2002	Outlet Factory Pond, Holliston to inlet South End Pond, Millis.	May-03	5
Box Pond (72008)	MA72008_2002	Bellingham/Mendon	Oct-98	5
Brookline Reservoir (72010)	MA72010_2002	Brookline	Dec-93	3
Bulloughs Pond (72011)	MA72011_2002	Newton	Dec-93	5
Cambridge Reservoir (72014)	MA72014_2002	Waltham/Lincoln/Lexington	Oct-98	2
Cambridge Reservoir, Upper Basin (72156)	MA72156_2002	Lincoln/Lexington	Oct-98	5
Cedar Swamp Pond (72016)	MA72016_2002	Milford	Oct-98	5
Chandler Pond (72017)	MA72017_2002	Boston	Dec-93	5
Charles River (7239050)	MA72-01_2002	Source, outlet Echo Lake, Hopkinton to Dilla Street, Milford. Miles 78.9-76.5 N/A	Nov-98	5

Appendix 2
Waterbody Segments and Integrated List Categories by Major Watershed

NAME	SEGMENT ID	DESCRIPTION	ASSESS DATE	CATEGORY
Charles River (7239050)	MA72-02_2002	Dilla Street, Milford to Milford WWTP, Hopedale. Miles 76.5-73.4 N/A	Oct-98	5
Charles River (7239050)	MA72-03_2002	Milford WWTP, Hopedale to outlet Box Pond, Bellingham. Miles 73.4-70.3 N/A	Oct-98	5
Charles River (7239050)	MA72-04_2002	Outlet Box Pond, Bellingham to outlet Populatic Pond, Norfolk/Medway. Miles 70.3-58.9 N/A	Nov-98	5
Charles River (7239050)	MA72-05_2002	Outlet Populatic Pond, Norfolk/Medway to South Natick Dam, Natick. Miles 58.9-41.0 ?	Nov-98	5
Charles River (7239050)	MA72-06_2002	South Natick Dam, Natick to Chestnut Street, Needham. Miles 41.0-33.0 ?	Dec-98	5
Charles River (7239050)	MA72-07_2002	Chestnut Street, Needham to Watertown Dam, Watertown. Miles 33.0-9.8 N/A	Dec-98	5
Charles River (7239050)	MA72-08_2002	(Charles Basin) Watertown Dam, Watertown to Science Museum, Boston. Miles 9.8-1.2 N/A	Dec-98	5
Cheese Cake Brook (7239100)	MA72-29_2002	Headwaters, West Newton to confluence with Charles River, Newton.	Dec-98	5
Chestnut Hill Reservoir (72023)	MA72023_2002	Boston	Oct-98	2
Crystal Lake (72030)	MA72030_2002	Newton	Oct-98	2
Dug Pond (72034)	MA72034_2002	Natick	Oct-98	2
Echo Lake (72035)	MA72035_2002	Milford/Hopkinton	Oct-98	2
Factory Pond (72037)	MA72037_2002	Holliston	Oct-98	5
Farm Pond (72039)	MA72039_2002	Sherborn	Oct-98	2
Franklin Reservoir Northeast (72095)	MA72095_2002	Franklin	Oct-98	5
Franklin Reservoir Southwest (72032)	MA72032_2002	Franklin	Oct-98	5
Fuller Brook (7239625)	MA72-18_2002	Headwaters south of Route 135, Needham to confluence with Waban Brook, Wellesley.	Dec-98	5
Halls Pond (72043)	MA72043_2002	Brookline	Dec-93	5
Hammond Pond (72044)	MA72044_2002	Newton	Oct-98	3
Hardys Pond (72045)	MA72045_2002	Waltham	Oct-98	5
Highland Lake (72047)	MA72047_2002	Norfolk	Dec-91	3
Houghton Pond (72050)	MA72050_2002	Holliston	Oct-98	5
Jamaica Pond (72052)	MA72052_2002	Boston	Oct-98	5
Jennings Pond (72053)	MA72053_2002	Natick	Oct-98	5
Kendrick Street Pond (72055)	MA72055_2002	Needham	Oct-98	5
Kingsbury Pond (72056)	MA72056_2002	Norfolk	Dec-99	4c
Linden Pond (72063)	MA72063_2002	Holliston	Oct-98	5
Little Farm Pond (72064)	MA72064_2002	Sherborn	Oct-98	3
Louisa Lake (72068)	MA72068_2002	Milford	Dec-91	3
Lymans Pond (72070)	MA72070_2002	Dover	Oct-98	5
Mill River (7240025)	MA72-15_2002	Headwaters, outlet Bush Pond, to confluence with Charles River, Norfolk.	Dec-98	2
Mine Brook (7240200)	MA72-14_2002	Headwaters west of Maggotty Hill to the confluence with the Charles River, Franklin. Miles 8.7-0.0	Nov-98	5
Mine Brook Pond (72077)	MA72077_2002	Franklin	Oct-98	5
Mirror Lake (72078)	MA72078_2002	Wrentham/Norfolk	Oct-98	5
Morses Pond (72079)	MA72079_2002	Wellesley/Natick	Oct-98	4c
Muddy River (7239075)	MA72-11_2002	Outlet of unnamed pond, Olmstead Park, Boston to confluence with Charles River, Boston.	Dec-98	5
Noannet Pond (72084)	MA72084_2002	Westwood/Dover	Oct-98	4c
Nonesuch Pond (72085)	MA72085_2002	Natick/Weston	Oct-98	2
Norumbega Reservoir (72086)	MA72086_2002	Weston	Oct-98	2
Norumbega Reservoir (72087)	MA72087_2002	Weston	Oct-98	2
Lake Pearl (72092)	MA72092_2002	Wrentham	Oct-98	3
Populatic Pond (72096)	MA72096_2002	Norfolk	Oct-98	5

LABORATORY ANALYTICAL

(SYSTEM INFLUENT)

REPORT OF ANALYTICAL RESULTS

NETLAB Case Number Q1006-21

Prepared for:

Attn: Wil Harrison
Envirotrac Ltd.
1400 Providence Hwy, Suite 2100
Norwood, MA 02062

Report Date: October 13, 2005

Lab # RI010

Electronic Copy

NEW ENGLAND TESTING LABORATORY, INC.
1254 Douglas Avenue, North Providence, RI 02904
(401) 353-3420

Total # of Pages: 9

ANALYTICAL METHOD REPORT CERTIFICATION FORM

Laboratory Name: New England Testing Laboratory, Inc.	Project #:
Project Location: ECI Framingham 846	RTN[1]:

This form provides certifications for the following data set: Q1006-21

Sample Matrices: Groundwater (X) Soil/Sediment ( ) Drinking Water ( ) Other:

SW-846 Methods Used					
	8260B ( )	8151A ( )	8330 ( )	6010B ( )	7470A/1A ( )
	8270C ( )	8081A ( )	VPH ( )	6020 ( )	9014M[2] ( )
	8082 ( )	8021B ( )	EPH ( )	7000 S[3] ( )	Other: (X)

1 List Release Tracking Number (RTN), if known
2 M – SW-846 Method 9014 or MADEP Physiologically Available Cyanide (PAC) Method
3 S – SW-846 Methods 7000 Series List individual method and analyte

An affirmative response to questions A, B, and C is required for "Presumptive Certainty" status

A	Were all samples received by the laboratory in a condition consistent with that described on the Chain-of Custody documentation for the data set?	Yes (X) No[1] ( )
B	Were all QA/QC procedures required for the specified analytical method(s) included in this report followed, including the requirement to note and discuss in a narrative QC data that did not meet appropriate performance standards or guidelines?	Yes (X) No[1] ( )
C	Does the analytical data included in this report meet all the requirements for "Presumptive Certainty", as described in Section 2.0 of the MADEP document CAM VII A, "Quality Assurance and Quality Control Guidelines for the Acquisition and Reporting of Analytical Data"?	Yes (X) No[1] ( ) Not Applicable ( )
D	***VPH and EPH Methods only***: Was the VPH and EPH Method conducted without significant modifications (see Section 11.3 of respective Methods)	Yes ( ) No[1] ( )

A response to questions E and F below is required for "Presumptive Certainty" status

E	Were all QC performance standards and recommendations for the specified methods achieved?	Yes (X) No[1] ( )
F	Were results for all analyte-list compounds/elements for the specified method(s) reported?	Yes (X) No[1] ( )

[1]All NO answers must be addressed in an attached Environmental Laboratory case narrative.

I, the undersigned, attest under the pains and penalties of perjury that, based upon my personal inquiry of those responsible for obtaining the information, the material contained in this analytical report is, to the best of my knowledge and belief, accurate and complete.

Signature: Mark H. Bishop LS Position: Laboratory Director

Printed Name: Mark H. Bishop Date: 10/13/2005

STATEMENTS/CERTIFICATIONS REQUIRED BY THE NATIONAL ENVIRONMENTAL LABORATORY APPROVAL CONFERENCE (NELAC)

New England Testing Laboratory is certified under the National Environmental Laboratory Approval Program (NELAP). This certification requires the following statements and certifications be included in our report.

This report shall not be reproduced, except in full, without written approval of the laboratory.

New England Testing certifies that the test results contained within this report meet all NELAC requirements except as detailed in the Case Narrative section of this report.

SAMPLES SUBMITTED and REQUEST FOR ANALYSIS:

The samples listed in Table I were submitted to New England Testing Laboratory on October 6, 2005. The group of samples appearing in this report was assigned an internal identification number (case number) for laboratory information management purposes. The client's designations for the individual samples, along with our case numbers, are used to identify the samples in this report. The case number for this sample submission is Q1006-21.

Custody records are included in this report.

Site: ECI Framingham 846

TABLE I, Samples Submitted

Sample ID	Date Sampled	Matrix	Analysis Requested
Bella Costa Influent	10/5/05	Water	Table II

TABLE II, Analysis and Methods

ANALYSIS	DETERMINATIVE METHOD
Total Petroleum Hydrocarbons	1664A

This method is documented in:

EPA-821-B-94-004

40 CFR 136, *Guidelines Establishing Test Procedures for the Analysis of Pollutants Under the Clean Water Act*, Office of Federal Register National Archives and Records Administration.

CASE NARRATIVE:

Sample Receipt:

No sample for ms/msd/duplicate analysis was supplied. No field blank was supplied. (This does not qualify the analytical results but does prevent conducting these SW-846 {Chapter 1, Section 3.4} QA Audits.)

The samples were all appropriately cooled and preserved upon receipt.

The samples were received in the appropriate containers.

The chain of custody was adequately completed and corresponded to the samples submitted.

General Chemistry:

TPH: No anomalies or excursions from QC limits

Sample Results

Case No. Q1006-21

Bella Costa Influent

Parameter	Result, mg/l	Reporting Limit	Date Analyzed
Total Petroleum Hydrocarbons	N.D.	2	10/13/05

N.D. = Not Detected

Custody Records

NEW ENGLAND TESTING LABORATORY, INC.
1254 Douglas Avenue
North Providence, RI 02904

CHAIN OF CUSTODY RECORD

PROJ. NO.

PROJECT NAME: ECI Framingham 846

CLIENT: EnviroTrac

Q1006.21

SAMPLE I. D.	DATE	TIME	COMP	GRAB	STATION LOCATION	NO. OF CONTAINERS	TESTS: TPH						REMARKS
	10505	245		X	Bella Costa Influent	1	X						PM: Will Harrison
													Include chromatograms w/lab report
													GW-1 Detection Limits
													Bill ET Direct
													★ ASAP TAT ★

Relinquished by: (Signature)	Date/Time	Received by: (Signature)	Relinquished by: (Signature)	Date/Time	Received by: (Signature)
	10-5-05 5:30pm	Secure ET Fridge		10/6/05 2:10	
Relinquished by: (Signature)	Date/Time	Received by: (Signature)	Relinquished by: (Signature)	Date/Time	Received by: (Signature)
Relinquished by: (Signature)	Date/Time	Received for Laboratory by: (Signature)	Date/Time	Remarks	
			10/6/05 1617	Temp 4°	

REPORT OF ANALYTICAL RESULTS

NETLAB Case Number Q1006-20

Prepared for:

Attn: Wil Harrison
Envirotrac Ltd.
1400 Providence Hwy, Suite 2100
Norwood, MA 02062

Report Date: October 13, 2005

Lab # RI010

Total # of Pages: 18

ANALYTICAL METHOD REPORT CERTIFICATION FORM

Laboratory Name: New England Testing Laboratory, Inc.	Project #:
Project Location: ECI Framingham 846	RTN[1]:

This form provides certifications for the following data set: Q1006-20

Sample Matrices: Groundwater (X) Soil/Sediment ( ) Drinking Water ( ) Other:

SW-846 Methods Used					
	8260B ( )	8151A ( )	8330 ( )	6010B ( )	7470A/1A ( )
	8270C ( )	8081A ( )	VPH ( )	6020 ( )	9014M[2] ( )
	8082 ( )	8021B ( )	EPH ( )	7000 S[3] ( )	Other: (X)

1 List Release Tracking Number (RTN), if known
2 M – SW-846 Method 9014 or MADEP Physiologically Available Cyanide (PAC) Method
3 S – SW-846 Methods 7000 Series List individual method and analyte

An affirmative response to questions A, B, and C is required for "Presumptive Certainty" status

A	Were all samples received by the laboratory in a condition consistent with that described on the Chain-of Custody documentation for the data set?	Yes (X) No[1] ( )
B	Were all QA/QC procedures required for the specified analytical method(s) included in this report followed, including the requirement to note and discuss in a narrative QC data that did not meet appropriate performance standards or guidelines?	Yes (X) No[1] ( )
C	Does the analytical data included in this report meet all the requirements for "Presumptive Certainty", as described in Section 2.0 of the MADEP document CAM VII A, "Quality Assurance and Quality Control Guidelines for the Acquisition and Reporting of Analytical Data"?	Yes (X) No[1] ( ) Not Applicable ( )
D	***VPH and EPH Methods only***: Was the VPH and EPH Method conducted without significant modifications (see Section 11.3 of respective Methods)	Yes ( ) No[1] ( )

A response to questions E and F below is required for "Presumptive Certainty" status

E	Were all QC performance standards and recommendations for the specified methods achieved?	Yes ( ) No[1] (X)
F	Were results for all analyte-list compounds/elements for the specified method(s) reported?	Yes (X) No[1] ( )

[1]All NO answers must be addressed in an attached Environmental Laboratory case narrative.

I, the undersigned, attest under the pains and penalties of perjury that, based upon my personal inquiry of those responsible for obtaining the information, the material contained in this analytical report is, to the best of my knowledge and belief, accurate and complete.

Signature: Mark H. Bishop LS Position: Laboratory Director

Printed Name: Mark H. Bishop Date: 10/13/2005

ANALYTICAL METHOD REPORT CERTIFICATION FORM

Laboratory Name: New England Testing Laboratory, Inc. Project #:

Project Location: ECI Framingham 846 RTN[1]:

This form provides certifications for the following data set: Q1006-20

Sample Matrices: Groundwater ( ) Soil/Sediment ( ) Drinking Water ( ) Other:

SW-846 Methods Used					
	8260B ( )	8151A ( )	8330 ( )	6010B ( )	7470A/1A ( )
	8270C ( )	8081A ( )	VPH ( )	6020 ( )	9014M[2] ( )
	8082 ( )	8021B ( )	EPH ( )	7000 S[3] ( )	Other: (X)

1 List Release Tracking Number (RTN), if known
2 M – SW-846 Method 9014 or MADEP Physiologically Available Cyanide (PAC) Method
3 S – SW-846 Methods 7000 Series List individual method and analyte

An affirmative response to questions A, B, and C is required for "Presumptive Certainty" status

A	Were all samples received by the laboratory in a condition consistent with that described on the Chain-of Custody documentation for the data set?	Yes (X) No[1] ( )
B	Were all QA/QC procedures required for the specified analytical method(s) included in this report followed, including the requirement to note and discuss in a narrative QC data that did not meet appropriate performance standards or guidelines?	Yes (X) No[1] ( )
C	Does the analytical data included in this report meet all the requirements for "Presumptive Certainty", as described in Section 2.0 of the MADEP document CAM VII A, "Quality Assurance and Quality Control Guidelines for the Acquisition and Reporting of Analytical Data"?	Yes (X) No[1] ( ) Not Applicable ( )
D	***VPH and EPH Methods only***: Was the VPH and EPH Method conducted without significant modifications (see Section 11.3 of respective Methods)	Yes ( ) No[1] ( )

A response to questions E and F below is required for "Presumptive Certainty" status

E	Were all QC performance standards and recommendations for the specified methods achieved?	Yes (X) No[1] ( )
F	Were results for all analyte-list compounds/elements for the specified method(s) reported?	Yes (X) No[1] ( )

[1]All NO answers must be addressed in an attached Environmental Laboratory case narrative.

I, the undersigned, attest under the pains and penalties of perjury that, based upon my personal inquiry of those responsible for obtaining the information, the material contained in this analytical report is, to the best of my knowledge and belief, accurate and complete.

Signature: Jodi Lyons Position: Director, Inorganics

Printed Name: Jodi Lyons Date: 10/13/2005

STATEMENTS/CERTIFICATIONS REQUIRED BY THE NATIONAL ENVIRONMENTAL LABORATORY APPROVAL CONFERENCE (NELAC)

New England Testing Laboratory is certified under the National Environmental Laboratory Approval Program (NELAP). This certification requires the following statements and certifications be included in our report.

This report shall not be reproduced, except in full, without written approval of the laboratory.

New England Testing certifies that the test results contained within this report meet all NELAC requirements except as detailed in the Case Narrative section of this report.

SAMPLES SUBMITTED and REQUEST FOR ANALYSIS:

The samples listed in Table I were submitted to New England Testing Laboratory on October 6, 2005. The group of samples appearing in this report was assigned an internal identification number (case number) for laboratory information management purposes. The client's designations for the individual samples, along with our case numbers, are used to identify the samples in this report. The case number for this sample submission is Q1006-20.

Custody records are included in this report.

Site: ECI Framingham 846

TABLE I, Samples Submitted

Sample ID	Date Sampled	Matrix	Analysis Requested
Bella Costa Influent	10/5/05	Water	Table II

TABLE II, Analysis and Methods

ANALYSIS	DETERMINATIVE METHOD
PCBs	608
Total Suspended Solids	160.2
Total Residual Chlorine	330.5
Hexavalent Chromium	7196A
Total Metals	
Antimony	3113B
Cadmium	3113B
Chromium	200.7
Copper	200.7
Iron	200.7
Lead	3113B
Mercury	245.1
Nickel	200.7
Selenium	3113B
Silver	3113B
Zinc	200.7

These methods are documented in:

Standard Methods for the Examination of Water and Wastewater, 18th Edition, 1992, APHA, AWWA-WPCF.

Manual of Methods for Chemical Analysis of Water and Water Wastes, EPA-600/4-79-020 (Revised 1983), USEPA/EMSL.

40 CFR 136, *Guidelines Establishing Test Procedures for the Analysis of Pollutants Under the Clean Water Act*, Office of Federal Register National Archives and Records Administration.

CASE NARRATIVE:

Sample Receipt:

No sample for ms/msd/duplicate analysis was supplied. No field blank was supplied.(This does not qualify the analytical results but does prevent conducting these SW-846 {Chapter 1, Section 3.4} QA Audits.)

The samples were all appropriately cooled and preserved upon receipt.

The samples were received in the appropriate containers.

The chain of custody was adequately completed and corresponded to the samples submitted.

Metals:

All analyses were performed according to NETLAB's documented Standard Operating Procedures, within all required holding times, and with appropriate quality control measures.

A marginal concentration of Iron was detected in the water method blank. The concentration of Iron was at the reporting limit. This has no significance on the usefulness of the sample result, which was found to be considerably greater than the blank contamination.

PCBs:

All samples were extracted and analyzed within method specified holding times and according to NETLAB's documented standard operating procedures. The results for the associated calibration, method blank and laboratory control sample (LCS) were within method specified quality control criteria.

The ongoing calibration was within specifications. The surrogate associated with sample "Bella Costa Influent" was spiked at a level below detectable limits. As a result, the surrogate was not reported. There were no other anomalies or non-conformances encountered. We conclude that the data reliability is not compromised by the excursions.

General Chemistry:

Total Suspended Solids: No anomalies or excursions from QC limits

Total Residual Chlorine: No anomalies or excursions from QC limits. Sample turbidity developed during analysis which can cause an interference. Therefore, a serial dilution was performed.

Hexavalent Chromium: No anomalies or excursions from QC limits

Sample Results

Case No. Q1006-20

Bella Costa Influent

Parameter	Result, mg/l	Reporting Limit	Date Analyzed
Total Suspended Solids	19	1	10/7/05
Residual Chlorine	N.D.	0.4	10/6/05
Hexavalent Chromium	N.D.	0.01	10/6/05 @ 16:18

N.D. = Not Detected

METALS RESULTS

The presence of the NETLAB LOGO in the top right corner of each page in this section indicates:

The Technical Manager of the Metals Analysis Department certifies that the results included in this section have been reviewed and approved. Any exceptions or qualifications of substance have been reported in the case narrative.

New England Testing Laboratory, Inc.

METALS RESULTS

NETLLAB

Case Number: Q1006-20
Sample ID: Bella Costa Influent
Date collected: 10/05/05
Matrix WATER
Sample Type: TOTAL

Analyst CC/RM

Parameter	CAS Number	Preparative Method	Analytical Method	Result	Reporting Limit	Detection Limit	Units	Date of Preparation	Date Analyzed
Antimony	7440-36-0	NA	3113B	ND	0.005	0.005	mg/l	10/7/05	10/10/05
Cadmium	7440-43-9	NA	3113B	0.0017	0.0005	0.0005	mg/l	10/7/05	10/10/05
Chromium	7440-47-3	NA	200.7	0.010	0.005	0.005	mg/l	10/7/05	10/11/05
Copper	7440-50-8	NA	200.7	0.04	0.02	0.02	mg/l	10/7/05	10/11/05
Iron	7439-89-6	NA	200.7	6.26	0.05	0.05	mg/l	10/7/05	10/11/05
Lead	7439-92-1	NA	3113B	0.008	0.002	0.002	mg/l	10/7/05	10/7/05
Mercury	7439-97-6	NA	245.1	ND	0.0002	0.0002	mg/l	10/11/05	10/11/05
Nickel	7440-02-0	NA	200.7	0.011	0.005	0.005	mg/l	10/7/05	10/11/05
Selenium	7782-49-2	NA	3113B	ND	0.005	0.005	mg/l	10/7/05	10/11/05
Silver	7440-22-4	NA	3113B	0.0012	0.0005	0.0005	mg/l	10/7/05	10/13/05
Zinc	7440-66-6	NA	200.7	0.08	0.02	0.02	mg/l	10/7/05	10/11/05

ND indicates not Detected

METALS RESULTS

Sample ID: METHOD BLANK

Matrix WATER

Sample Type: Preparation Blank

Analyst CC/RM

Parameter	CAS Number	Preparative Method	Analytical Method	Result	Reporting Limit	Detection Limit	Units	Date of Preparation	Date Analyzed
Antimony	7440-36-0	NA	3113B	ND	0.005	0.005	mg/l	10/7/05	10/10/05
Cadmium	7440-43-9	NA	3113B	ND	0.0005	0.0005	mg/l	10/7/05	10/10/05
Chromium	7440-47-3	NA	200.7	ND	0.005	0.005	mg/l	10/7/05	10/11/05
Copper	7440-50-8	NA	200.7	ND	0.02	0.02	mg/l	10/7/05	10/11/05
Iron	7439-89-6	NA	200.7	0.08	0.05	0.05	mg/l	10/7/05	10/11/05
Lead	7439-92-1	NA	3113B	ND	0.002	0.002	mg/l	10/7/05	10/7/05
Mercury	7439-97-6	NA	245.1	ND	0.0002	0.0002	mg/l	10/11/05	10/11/05
Nickel	7440-02-0	NA	200.7	ND	0.005	0.005	mg/l	10/7/05	10/11/05
Selenium	7782-49-2	NA	3113B	ND	0.005	0.005	mg/l	10/7/05	10/11/05
Silver	7440-22-4	NA	3113B	ND	0.0005	0.0005	mg/l	10/7/05	10/13/05
Zinc	7440-66-6	NA	200.7	ND	0.02	0.02	mg/l	10/7/05	10/11/05

ND indicates not Detected

LABORATORY CONTROL SAMPLE RECOVERY

Parameter	True Value	Result	Units	Recovery, %	LCL, %	UCL, %	Date Analyzed
Antimony	0.02	0.0179	mg/l	89.6	81	123	10/10/05
Cadmium	0.005	0.00517	mg/l	103	80	122	10/10/05
Chromium	1	0.946	mg/l	94.6	89	110	10/11/05
Copper	1	1.02	mg/l	102	87	113	10/11/05
Iron	1	1.00	mg/l	100	74	122	10/11/05
Lead	0.02	0.0192	mg/l	96.1	86	119	10/7/05
Mercury	0.001	0.001	mg/l	100	89	114	10/11/05
Nickel	1	0.974	mg/l	97.4	89	109	10/11/05
Selenium	0.02	0.0221	mg/l	111	88	113	10/11/05
Silver	0.005	0.0053	mg/l	106	71	118	10/13/05
Zinc	1	0.978	mg/l	97.8	91	110	10/11/05

RESULTS: PCBs

The presence of the NETLAB LOGO in the top right corner of each page in this section indicates:

The Technical Manager of the Organics Analysis Department certifies that the samples included in this section have been prepared and analyzed using the procedures cited and that the results have been reviewed and approved. Any exceptions or qualifications of substance have been reported in the case narrative.

Sample: Bella Costa Influent		Analyst's Initials: DC
Case No. Q1006-20		
Date Collected: 10/5/05		
Sample Matrix: Water		
Subject: PCBs	Date Extracted	Date Analyzed
Analytical Method: EPA 608	10/7/05	10/9/05
Compound	Concentration ug/l (ppb)	Reporting Limit
PCB-1016	N.D.	0.2
PCB-1221	N.D.	0.4
PCB-1232	N.D.	0.2
PCB-1242	N.D.	0.2
PCB-1248	N.D.	0.2
PCB-1254	N.D.	0.2
PCB-1260	N.D.	0.2
Surrogates:		
Compound	% Recovery	Limits
TCMX	*	25-141
DCBP	*	41-156

*See comment in narrative.

Sample: Method Blank		Analyst's Initials: DC
Case No. Q1006-20		
Date Collected: NA		
Sample Matrix: Water		
Subject: PCBs	Date Extracted	Date Analyzed
Analytical Method: EPA 608	10/7/05	10/9/05
Compound	Concentration ug/l (ppb)	Reporting Limit
PCB-1016	N.D.	0.2
PCB-1221	N.D.	0.4
PCB-1232	N.D.	0.2
PCB-1242	N.D.	0.2
PCB-1248	N.D.	0.2
PCB-1254	N.D.	0.2
PCB-1260	N.D.	0.2
Surrogates:		
Compound	% Recovery	Limits
TCMX	88	25-141
DCBP	85	41-156

PCB Laboratory Control Spike

Date Collected: NA			Analyst:	DC
Sample Matrix: Water				
Subject: PCB	Date Extracted			Date Analyzed
Prep Method: EPA 3510C	10/7/05			10/9/05
Analytical Method: EPA 8082				
Compound	Amount Spiked ug/l	Result ug/l	Recovery %	Recovery Limits
1254-1	0.50	0.56	112	40-140

Custody Records

NEW ENGLAND TESTING LABORATORY, INC.
1254 Douglas Avenue
North Providence, RI 02904

CHAIN OF CUSTODY RECORD

Q1006.20

PROJ. NO.:

PROJECT NAME: ECI Framingham 8446

CLIENT: EnviroTrac Ltd

SAMPLE I. D.	DATE	TIME	COMP	GRAB	STATION LOCATION	NO. OF CONTAINERS	TESTS: TSS	Total PCBs	Total Cr, Cu, Ni, Zn, Fe, Sb, Cd, Pb, Al, Se, Ag, Zn	Total Residual Chlorine + Hex Chrom.			REMARKS
	10-5-05	2:45 pm		X	Bella Costa Influent	4	X	X	X	X			PM: Will Harrison
													Include chromatograms w/lab report
													GW-1 Detection Limits
													UPDES RGP Sampling Requirements
													Attached
													Bill Motiva Direct
													SAP# 1377760
													Inc# 98997768
													Attn: Dave Weeks
													* ASAP TAT *

Relinquished by: (Signature)	Date/Time	Received by: (Signature)	Relinquished by: (Signature)	Date/Time	Received by: (Signature)
[signature]	10-5-05 5:30 pm	Secure ET Fridge	[signature]	10/6/05 2:10	[signature]
Relinquished by: (Signature)	Date/Time	Received by: (Signature)	Relinquished by: (Signature)	Date/Time	Received by: (Signature)
Relinquished by: (Signature)	Date/Time	Received for Laboratory by: (Signature)	Date/Time	Remarks	
		[signature]	10/6/05 16:16	Temp 4°	

ACCUTEST

October 19, 2005

Michelle Smith
NewFields Princeton LLC
22 West Street
Red Bank, NJ 07701

Dear Ms. Smith

As per your request, here is a brief note regarding analysis of metals based on methods SW846-6010B, and EPA 200.7. Both are acceptable methods using same technology (Inductively Coupled Plasma, ICP), instrumentation, and optimization techniques. Calibration standards and digested samples are matrix matched and internal standard is utilized for the analysis, and the results are generally compatible.

Sincerely,

Brad Madadian
Laboratory Manager
Accutest laboratories of New England

New England ACCUTEST Laboratories

10/20/05

Technical Report for

Shell Oil

ENVTRAC:98997768 (REIMBMA) 846 Concord Street, Framingham, MA

ECI

Accutest Job Number: M51581

Sampling Date: 10/05/05

Report to:

msmith@newfields.com

Total number of pages in report: 30

ACCREDITED IN ACCORDANCE WITH nelac

Test results contained within this data package meet the requirements of the National Environmental Laboratory Accreditation Conference and/or state specific certification programs as applicable.

Reza Tand
Lab Director

Certifications: MA (M-MA136) CT (PH-0109) NH (250204) RI (00071) ME (MA136) FL (E87579) NY (23346) NJ (MA926) NAVY USACE

This report shall not be reproduced, except in its entirety, without the written approval of Accutest Laboratories.

Sections: 1 2 3 4 5

Table of Contents

-1-

Section 1: Sample Summary **3**
Section 2: Sample Results **4**
2.1: M51581-1: BELLA COSTA INFLUENT 4
2.2: M51581-1A: BELLA COSTA INFLUENT 6
Section 3: Misc. Forms 7
3.1: Chain of Custody 8
Section 4: GC/MS Volatiles - QC Data Summaries **17**
4.1: Method Blank Summary 18
4.2: Blank Spike Summary 21
4.3: Blank Spike/Blank Spike Duplicate Summary 22
4.4: Matrix Spike/Matrix Spike Duplicate Summary 23
4.5: Surrogate Recovery Summaries 25
Section 5: GC Volatiles - QC Data Summaries **26**
5.1: Method Blank Summary 27
5.2: Blank Spike Summary 28
5.3: Matrix Spike/Matrix Spike Duplicate Summary 29
5.4: Surrogate Recovery Summaries 30

Accutest Laboratories

Sample Summary

Shell Oil

Job No: M51581

ENVTRAC:98997768 (REIMBMA) 846 Concord Street, Framingham, MA
Project No: ECI

Sample Number	Collected Date	Time By	Received	Matrix Code	Matrix Type	Client Sample ID
M51581-1	10/05/05	14:45 AA	10/11/05	AQ	Influent	BELLA COSTA INFLUENT
M51581-1A	10/05/05	14:45 AA	10/11/05	AQ	Influent	BELLA COSTA INFLUENT

Accutest Laboratories

Report of Analysis

Client Sample ID:	BELLA COSTA INFLUENT		
Lab Sample ID:	M51581-1	Date Sampled:	10/05/05
Matrix:	AQ - Influent	Date Received:	10/11/05
Method:	SW846 8260B	Percent Solids:	n/a
Project:	ENVTRAC:98997768 (REIMBMA) 846 Concord Street, Framingham, MA		

	File ID	DF	Analyzed	By	Prep Date	Prep Batch	Analytical Batch
Run #1	G53842.D	1	10/18/05	AA	n/a	n/a	MSG2146
Run #2							

	Purge Volume
Run #1	5.0 ml
Run #2	

VOA 8260 List

CAS No.	Compound	Result	RL	Units	Q
67-64-1	Acetone	ND	5.0	ug/l	
71-43-2	Benzene	0.78	0.50	ug/l	
56-23-5	Carbon tetrachloride	ND	1.0	ug/l	
95-50-1	1,2-Dichlorobenzene	ND	1.0	ug/l	
541-73-1	1,3-Dichlorobenzene	ND	1.0	ug/l	
106-46-7	1,4-Dichlorobenzene	ND	1.0	ug/l	
75-34-3	1,1-Dichloroethane	ND	1.0	ug/l	
107-06-2	1,2-Dichloroethane	ND	1.0	ug/l	
75-35-4	1,1-Dichloroethene	ND	1.0	ug/l	
156-59-2	cis-1,2-Dichloroethene	ND	1.0	ug/l	
123-91-1	1,4-Dioxane	ND	25	ug/l	
100-41-4	Ethylbenzene	ND	1.0	ug/l	
1634-04-4	Methyl Tert Butyl Ether	1.3	1.0	ug/l	
75-09-2	Methylene chloride	ND	2.0	ug/l	
127-18-4	Tetrachloroethene	ND	1.0	ug/l	
108-88-3	Toluene	ND	1.0	ug/l	
71-55-6	1,1,1-Trichloroethane	ND	1.0	ug/l	
79-00-5	1,1,2-Trichloroethane	ND	1.0	ug/l	
79-01-6	Trichloroethene	ND	1.0	ug/l	
75-01-4	Vinyl chloride	ND	1.0	ug/l	
1330-20-7	Xylene (total)	ND	1.0	ug/l	

CAS No.	Surrogate Recoveries	Run# 1	Run# 2	Limits
1868-53-7	Dibromofluoromethane	99%		82-127%
2037-26-5	Toluene-D8	97%		88-112%
460-00-4	4-Bromofluorobenzene	95%		80-118%

ND = Not detected
RL = Reporting Limit
E = Indicates value exceeds calibration range
J = Indicates an estimated value
B = Indicates analyte found in associated method blank
N = Indicates presumptive evidence of a compound

Accutest Laboratories

Report of Analysis

Client Sample ID:	BELLA COSTA INFLUENT		
Lab Sample ID:	M51581-1	Date Sampled:	10/05/05
Matrix:	AQ - Influent	Date Received:	10/11/05
Method:	EPA 504 EPA 504	Percent Solids:	n/a
Project:	ENVTRAC:98997768 (REIMBMA) 846 Concord Street, Framingham, MA		

	File ID	DF	Analyzed	By	Prep Date	Prep Batch	Analytical Batch
Run #1	YZ29110.D	1	10/15/05	CZ	10/14/05	OP9830	GYZ1210
Run #2							

	Initial Volume	Final Volume
Run #1	35.2 ml	2.0 ml
Run #2		

CAS No.	Compound	Result	RL	Units	Q
106-93-4	1,2-Dibromoethane	ND	0.015	ug/l	

CAS No.	Surrogate Recoveries	Run# 1	Run# 2	Limits
460-00-4	Bromofluorobenzene (S)	91%		26-158%

ND = Not detected
RL = Reporting Limit
E = Indicates value exceeds calibration range

J = Indicates an estimated value
B = Indicates analyte found in associated method blank
N = Indicates presumptive evidence of a compound

Accutest Laboratories

Report of Analysis

Client Sample ID:	BELLA COSTA INFLUENT		
Lab Sample ID:	M51581-1A	Date Sampled:	10/05/05
Matrix:	AQ - Influent	Date Received:	10/11/05
Method:	SW846 8260B	Percent Solids:	n/a
Project:	ENVTRAC:98997768 (REIMBMA) 846 Concord Street, Framingham, MA		

	File ID	DF	Analyzed	By	Prep Date	Prep Batch	Analytical Batch
Run #1	P2245.D	1	10/14/05	AMY	n/a	n/a	MSP76
Run #2							

	Purge Volume
Run #1	5.0 ml
Run #2	

Oxygenates

CAS No.	Compound	Result	RL	Units	Q
994-05-8	tert-Amyl Methyl Ether	ND	2.0	ug/l	
75-65-0	Tert Butyl Alcohol	ND	100	ug/l	

CAS No.	Surrogate Recoveries	Run# 1	Run# 2	Limits
1868-53-7	Dibromofluoromethane	132% [a]		82-127%
2037-26-5	Toluene-D8	96%		88-112%
460-00-4	4-Bromofluorobenzene	113%		80-118%

(a) Outside control limits due to possible matrix interference. Confirmed by reanalysis.

ND = Not detected
RL = Reporting Limit
E = Indicates value exceeds calibration range
J = Indicates an estimated value
B = Indicates analyte found in associated method blank
N = Indicates presumptive evidence of a compound

Misc. Forms

Custody Documents and Other Forms

Includes the following where applicable:

- Chain of Custody

ACCUTEST Laboratories

CHAIN OF CUSTODY

495 TECHNOLOGY CENTER WEST • BUILDING ONE
MARLBOROUGH, MA 01752
TEL: 508-481-6200 • FAX: 508-481-7753

ACCUTEST JOB #: M51581
ACCUTEST QUOTE #:

CLIENT INFORMATION

NAME: EnviroTrac Ltd
ADDRESS: 1400 Providence Hwy Suite 2100
CITY: Norwood STATE: MA ZIP: 02062
SEND REPORT TO: Will Harrison
PHONE #: 781-769-5005

FACILITY INFORMATION

PROJECT NAME: ECI Framingham 846
LOCATION: 846 Concord St Framingham, MA
PROJECT NO.:
FAX #: 781-769-9845

ANALYTICAL INFORMATION

ACCUTEST SAMPLE #	FIELD ID / POINT OF COLLECTION	COLLECTION DATE	COLLECTION TIME	SAMPLED BY:	MATRIX	# OF BOTTLES	PRESERVATION HCl	NaOH	HNO3	H2SO4	NONE	Na2S2O3	VOC by 8260 + EDB DTPP MTBE, #1-14 Dissolve	VOC by 8260 TBA + THM2 Only	EDB by 504.1	LAB USE ONLY
-1	Bella Costa Influent	10-5-05	2:45 pm	AA	GW	10	X				X	X	X	X	X	

MATRIX CODES

DW - DRINKING WATER
GW - GROUND WATER
WW - WASTE WATER
SO - SOIL
SL - SLUDGE
OI - OIL
LIQ - OTHER LIQUID
SOL - OTHER SOLID

DATA TURNAROUND INFORMATION

☐ 14 DAYS STANDARD — APPROVED BY:
☒ 7 DAYS RUSH
☐ 48 HOUR EMERGENCY
☐ OTHER

14 DAY TURNAROUND HARDCOPY, EMERGENCY OR RUSH IS FAX DATA UNLESS PREVIOUSLY APPROVED

DATA DELIVERABLE INFORMATION

☒ STANDARD
☐ COMMERCIAL "B"
☐ DISK DELIVERABLE
☐ STATE FORMS
☐ OTHER (SPECIFY)

1E9

COMMENTS/REMARKS

Include chromatograms w/lab report
Bill ET Direct; GW-1 Detection Limits;
NPDES RGP Sampling Requirements Attached

SAMPLE CUSTODY MUST BE DOCUMENTED BELOW EACH TIME SAMPLES CHANGE POSSESION, INCLUDING COURIER DELIVERY

RELINQUISHED BY SAMPLER:	DATE TIME:	RECEIVED BY:	RELINQUISHED BY:	DATE TIME:	RECEIVED BY:
1.	10-5-05 5:30 pm	1. Secure ET Fridge	2.	10/11/05	2.
RELINQUISHED BY: 3.	DATE TIME: 10/11/05 12:15	RECEIVED BY: 3.	RELINQUISHED BY: 4.	DATE TIME:	RECEIVED BY: 4.
RELINQUISHED BY: 5.	DATE TIME:	RECEIVED BY: 5.	SEAL #	PRESERVE WHERE APPLICABLE ☐	ON ICE ☐ TEMPERATURE 2.0 C

3.1 3

M51581: Chain of Custody
Page 1 of 9

ACCURS!

CHAIN OF CUSTODY ATTACHMENT - EPA NPDES RGP REQUIREMENTS
PART 1 of 2

PARAMETER	Minimum Levels and Test Methods METHOD	ML[1]	Discharge Effluent Limit
MISCELLANEOUS COMPOUNDS			
Total Suspended Solids	160.2	5 mg/l	30 mg/l
Total Petroleum Hydrocarbons	1664	5 mg/l	5.0 mg/l
PCBs			
Total Polychlorinated Biphenyls (PCBs)	608	0.5 ug/l	0.000064 ug/l (compliance limit = ML of test method used)
	~~1668a[14]~~	~~0.00005 ug/l~~	
INORGANIC PARAMETERS			
Total Chromium	~~Flame AA (218.1)~~	~~none specified~~	Chromium III: MA = FW = 48.8 ug/l, MA = SW = 100 ug/l, NH = FW = 27.7 ug/l, NH = SW = 100 ug/l
	ICP (200.7[11])	10 ug/l	
	~~ICP (200.8)~~	~~10 ug/l~~	
	~~ICP (200.15)~~	~~10 ug/l~~	
	~~ICP (1620)~~	~~10 ug/l~~	
	~~Furnace AA (200.9)~~	~~5 ug/l~~	
	~~Other~~	~~50 ug/l~~	
Total Copper (Cu)	~~Flame AA~~	~~20 ug/l~~	MA = FW = 5.2 ug/l, MA = SW = 3.7 ug/l, NH = FW = 2.9 ug/l, NH = SW = 3.7 ug/l
	ICP	5 ug/l	
	~~Furnace AA~~	~~3 ug/l~~	
Total Mercury (Hg)	Other	0.2 ug/l	MA & NH = FW = 0.9 ug/l, MA & NH = SW = 1.1 ug/l
Total Iron (Fe)	~~6010b~~	~~see footnote~~	MA & NH = 1,000 ug/l
	200.7[12]	see footnote	

Prepared by NewFields 9/20/2005 Part 1 of 2 - Page 1 of 2

CHAIN OF CUSTODY ATTACHMENT - EPA NPDES RGP REQUIREMENTS
PART 1 of 2

	Minimum Levels and Test Methods		
PARAMETER	METHOD	ML[1]	Discharge Effluent Limit

LEGEND:
RGP = Remediation General Permit
Flame AA = Flame Atomic Absorption
ICP = Inductively Coupled Plasma
Furnace AA = Furnace Atomic Absorption
FW = Freshwater
SW = Saltwater
MA = State of Massachusetts
NH = State of New Hampshire

FOOTNOTES:

1. Minimum Level (ML) is the lowest level at which the analytical system gives a recognizable signal and acceptable calibration point for the analyte. The ML represents the lowest concentration at which an analyte can be measured with a known level of confidence. The ML is calculated by multiplying the laboratory-determined method detection limit by 3.18 (see 40 CFR Part 136, Appendix B) Where a minimum level (ML) is listed but a test method is not specified, permittee may use any of the available methods approved for use under 40 CFR 136, including alternatives approved by this permit, that meets ML. See EPA's "Methods and Guidance for the Analysis of Water" at www.epa.gov/water/owrccatalog.nsf. Where a test method is specified but ML is not listed for that Method, the lowest ML for listed methods must be used before concentration can be considered as "non-detect".
2. For measuring volatile organic compounds, Method 8260C (or the latest version) may be used as a substitute for CWA Methods 524.2, 602, 624, or 1624. Method 8260C must be preceded by Method 5030 as the preparation method. However, any method changes must be accompanied by documented quality assurance quality control (QA/QC) test to prove that the analytical process can achieve the lower detection limits of Method 8260C. For TBA and TAME the EPA advises no acid as a preservative.
3. For measuring semi-volatile organic compounds, Method 8270D may be used as a substitute for Methods 610, 625, or 1625. Method 8270D must be preceded by Method 3520C as the sample preparation method. In either case, the quality control requirements of Method 3500B must be taken into account. The sample preparation method must be specified with data analysis records. Method 8270D may be modified to provide lower detection and quantitation limits using Selected Ion Monitoring (SIM). Any method changes must be accompanied by documented quality assurance quality control (QA/QC) test results to prove that the analytical process can achieve the lower detection limits of Method 8270D.
4. GC - gas chromatography.
5. GCMS -gas chromatography/ mass spectrometry
6. LC-high pressure liquid chromatography.
7. Flame Atomic Absorption.
8. For measuring fuel oxygenates, Method 602 must be modified to include a heated purge.
9. The sum of individual phthalate compounds.
10. In the November 2002 WQC, EPA has revised the definition of total PCBs for aquatic life as "total PCBs is the sum of all homologue, all isomer, all congener, or all Aroclor analyses.
11. Method 1668a (HRGC/HRMS) has been proposed by EPA and is currently being validated. When approval of the method is finalized, it will be approved for use with this general permit
12. Methods 6010b and 200.7 for metals may only be used when sample prepared with SW-846 digestion method, Method 3010.
13. Any value below the ML shall be reported as zero.
14. Analysis of the influent samples shall use the test methods with the MLs at or below limits where practicable.

CHAIN OF CUSTODY ATTACHMENT - EPA NPDES RGP REQUIREMENTS
PART 2 of 2 (ACCUTEST)

PARAMETER	Minimum Levels and Test Methods		Discharge Effluent Limit
	METHOD	ML[1]	
MISCELLANEOUS COMPOUNDS			
Cyanide (total)	335.4	10 ug/l	MA & NH = SW = 1.0 ug/l, MA & NH = FW = 5.2 ug/l (compliance limit = ML = 10 ug/l)
VOLATILE ORGANIC COMPOUNDS			
Benzene	~~602~~	~~0.5 ug/l~~	5.0 ug/l
	~~624~~	~~2 ug/l~~	
	8260C[2]	see footnote	
Toluene	~~602~~	~~0.5 ug/l~~	Limited as Total BTEX
	~~624~~	~~2 ug/l~~	
	8260C[2]	see footnote	
Ethylbenzene	~~602~~	~~0.5 ug/l~~	Limited as Total BTEX
	~~624~~	~~2 ug/l~~	
	8260C[2]	see footnote	
Xylenes (total)	~~602~~	~~0.5 ug/l~~	Limited as Total BTEX
	~~1624~~	~~10 ug/l~~	
	8260C[2]	see footnote	
Total BTEX	~~602~~	~~0.5 ug/l~~	100 ug/l
	~~624~~	~~2 ug/l~~	
	8260C[2]	see footnote	
Ethylene Dibromide (EDB), 1,2-Dibromomethane	~~613~~	~~1.0 ug/l~~	0.05 ug/l (must use method 504.1 for sites certifying this compound is 'not present')
	504.1	0.01 ug/l	
	~~524.2~~	~~0.1 ug/l~~	
	~~8260C[2]~~	~~see footnote~~	
Methyl tert-butyl ether (MTBE)	~~602[5]~~	~~0.5 ug/l~~	70 ug/l
	~~524.2~~	~~5.0 ug/l~~	
	8260C[2]	see footnote	
tert-Butyl Alcohol (TBA)	~~602[5]~~	~~0.5 ug/l~~	Monitor Only
	~~1666~~	~~100 ug/l~~	
	8260C[2]	see footnote	
tert-Amyl Methyl Ether (TAME)	~~602[5]~~	~~0.5 ug/l~~	Monitor Only
	8260C[2]	see footnote	
Naphthalene	~~610 (GC/FID)~~	~~10 ug/l~~	20 ug/l
	~~625~~	~~2 ug/l~~	
	~~524.2~~	~~5 ug/l~~	
	~~610 HPLC~~	~~0.2 ug/l~~	
	8270D[3]	see footnote	
Carbon Tetrachloride	~~601~~	~~0.5 ug/l~~	4.4 ug/l
	~~624~~	~~2 ug/l~~	
	~~1624~~	~~2 ug/l~~	
	8260C[2]	see footnote	
	~~601~~	~~0.5 ug/l~~	

CHAIN OF CUSTODY ATTACHMENT - EPA NPDES RGP REQUIREMENTS
PART 2 of 2 (ACCUTEST)

PARAMETER	Minimum Levels and Test Methods METHOD	ML[1]	Discharge Effluent Limit
1,4-Dichlorobenzene (p-DCB)	~~602~~	~~0.5 ug/l~~	5.0 ug/l
	~~624~~	~~2 ug/l~~	
	~~625~~	~~2 ug/l~~	
	8260C[2]	see footnote	
1,2-Dichlorobenzene (o-DCB)	~~601~~	~~0.5 ug/l~~	600 ug/l
	~~602~~	~~0.5 ug/l~~	
	~~624~~	~~2 ug/l~~	
	~~625~~	~~2 ug/l~~	
	8260C[2]	see footnote	
1,3-Dichlorobenzene (m-DCB)	~~601~~	~~0.5 ug/l~~	320 ug/l
	~~602~~	~~0.5 ug/l~~	
	~~624~~	~~2 ug/l~~	
	~~625~~	~~2 ug/l~~	
	8260C[2]	see footnote	
1,1 Dichloroethane (DCA)	~~601~~	~~0.5 ug/l~~	70 ug/l
	~~624~~	~~1 ug/l~~	
	8260C[2]	see footnote	
1,2 Dichloroethane (DCA)	~~601~~	~~0.5 ug/l~~	5.0 ug/l
	~~624~~	~~2 ug/l~~	
	8260C[2]	see footnote	
1,1 Dichloroethylene (DCE)	~~601~~	~~0.5 ug/l~~	3.2 ug/l
	~~624~~	~~2 ug/l~~	
	8260C[2]	see footnote	
cis-1,2 Dichloro-ethylene (DCE)	~~601~~	~~0.5 ug/l~~	70 ug/l
	~~624~~	~~2 ug/l~~	
	8260C[2]	see footnote	
Dichloromethane (Methylene Chloride)	~~601~~	~~0.5 ug/l~~	4.6 ug/l
	~~624~~	~~2 ug/l~~	
	8260C[2]	see footnote	
Tetrachloroethylene (PCE)	~~601~~	~~0.5 ug/l~~	5.0 ug/l
	~~624~~	~~2 ug/l~~	
	8260C[2]	see footnote	
1,1,1 Trichloro-ethane (TCA)	~~601~~	~~0.5 ug/l~~	200 ug/l
	~~624~~	~~2 ug/l~~	
	8260C[2]	see footnote	
1,1,2 Trichloro-ethane (TCA)	~~601~~	~~0.5 ug/l~~	5.0 ug/l
	~~624~~	~~2 ug/l~~	
	8260C[2]	see footnote	

CHAIN OF CUSTODY ATTACHMENT - EPA NPDES RGP REQUIREMENTS
PART 2 of 2 (ACCUTEST)

PARAMETER	Minimum Levels and Test Methods METHOD	ML[1]	Discharge Effluent Limit
Trichloroethylene (TCE)	~~601~~	~~0.5 ug/l~~	5.0 ug/l
	~~624~~	~~2 ug/l~~	
	8260C[2]	see footnote	
Vinyl Chloride (chloroethene)	~~601~~	~~0.5 ug/l~~	2.0 ug/l
	~~624~~	~~2 ug/l~~	
	8260C[2]	see footnote	
Acetone	~~524.2~~	~~1.0 ug/l~~	Monitor Only
	~~1624~~	~~50 ug/l~~	
	8260C[2]	see footnote	
1,4 Dioxane	~~1624~~	~~50 ug/l~~	Monitor Only
	8260C[2]	see footnote	
PHENOL COMPOUNDS			
Total Phenols	~~624~~	~~1.0 ug/l~~	300 ug/l
	~~8260[2]~~	~~see footnote~~	
	~~625~~	~~1.0 ug/l~~	
	~~1625~~	~~1.0 ug/l~~	
	~~8260C[2]~~	~~see footnote~~	
	8270D[3]	see footnote	
BASE NEUTRAL ACID EXTRACTABLES COMPOUNDS			
Pentachlorophenol (PCP)	~~604 (GCFID)~~	~~1.0 ug/l~~	1.0 ug/l
	~~625~~	~~5 ug/l~~	
	~~1625~~	~~5 ug/l~~	
	8270D[3] (SIM, ML=1.0)	see footnote	
Total Phthalates[6] (Phthalate esthers)	~~625~~	~~5 ug/l~~	3.0 ug/l
	8270D[3] (SIM, ML<=3.0)	see footnote	
Bis (2-Ethylhexyl) Phthalate	~~606~~	~~10 ug/l~~	6.0 ug/l
	~~625~~	~~5 ug/l~~	
	8270D[3]	see footnote	

CHAIN OF CUSTODY ATTACHMENT - EPA NPDES RGP REQUIREMENTS
PART 2 of 2 (ACCUTEST)

PARAMETER	Minimum Levels and Test Methods METHOD	ML[1]	Discharge Effluent Limit
POLYNUCLEAR AROMATIC HYDROCARBON COMPOUNDS			
Total Group I Polynuclear Aromatic Hydrocarbons (PAH)	8270D[3]	see footnote	10.0 ug/l
Benzo (a) Anthracene	~~610 GC~~	~~10 ug/l~~	0.0038 ug/l (compliance limit = ML of test method used)
	~~625~~	~~5 ug/l~~	
	~~610 HPLC~~	~~0.05 ug/l~~	
	8270D[3]	see footnote	
Benzo(a)pyrene	~~625~~	~~10 ug/l~~	0.0038 ug/l (compliance limit = ML of test method used)
	~~610 HPLC~~	~~2 ug/l~~	
	8270D[3]	see footnote	
Benzo(b)fluoranthene	~~625~~	~~10 ug/l~~	0.0038 ug/l (compliance limit = ML of test method used)
	~~610 HPLC~~	~~0.1 ug/l~~	
	8270D[3]	see footnote	
Benzo(k)fluoranthene	~~625~~	~~10 ug/l~~	0.0038 ug/l (compliance limit = ML of test method used)
	~~610 HPLC~~	~~2 ug/l~~	
	8270D[3]	see footnote	
Chrysene	~~625~~	~~10 ug/l~~	0.0038 ug/l (compliance limit = ML of test method used)
	~~610 HPLC~~	~~5 ug/l~~	
	8270D[3]	see footnote	
Dibenzo(a,h)anthracene	~~625~~	~~10 ug/l~~	0.0038 ug/l (compliance limit = ML of test method used)
	~~610 HPLC~~	~~0.1 ug/l~~	
	8270D[3]	see footnote	
Indeno(1,2,3-cd)pyrene	~~625~~	~~10 ug/l~~	0.0038 ug/l (compliance limit = ML of test method used)
	~~610 HPLC~~	~~0.15 ug/l~~	
	8270D[3]	see footnote	

CHAIN OF CUSTODY ATTACHMENT - EPA NPDES RGP REQUIREMENTS
PART 2 of 2 (ACCUTEST)

PARAMETER	Minimum Levels and Test Methods METHOD	ML[1]	Discharge Effluent Limit
Total Group II Polynuclear Aromatic Hydrocarbons	8270D[3]	see footnote	100 ug/l
Acenaphthene	~~610 GC/FID~~	~~1 ug/l~~	Limited as Total Group II PAHs
	~~625~~	~~1 ug/l~~	
	~~610 HPLC~~	~~0.5 ug/l~~	
	8270D[3]	see footnote	
Acenaphthylene	~~625~~	~~10 ug/l~~	Limited as Total Group II PAHs
	~~610 HPLC~~	~~0.2 ug/l~~	
	8270D[3]	see footnote	
Anthracene	~~625~~	~~10 ug/l~~	Limited as Total Group II PAHs
	~~610 HPLC~~	~~2 ug/l~~	
	8270D[3]	see footnote	
Benzo(g,h,i)perylene	~~625~~	~~5 ug/l~~	Limited as Total Group II PAHs
	~~610 HPLC~~	~~0.1 ug/l~~	
	8270D[3]	see footnote	
Fluoranthene	~~610 GC/FID~~	~~10 ug/l~~	Limited as Total Group II PAHs
	~~625~~	~~1 ug/l~~	
	~~610 HPLC~~	~~0.5 ug/l~~	
	8270D[3]	see footnote	
Fluorene	~~625~~	~~10 ug/l~~	Limited as Total Group II PAHs
	~~610 HPLC~~	~~0.1 ug/l~~	
	8270D[3]	see footnote	
Phenanthrene	~~625~~	~~5 ug/l~~	Limited as Total Group II PAHs
	~~610 HPLC~~	~~0.05 ug/l~~	
	8270D[3]	see footnote	
Pyrene	~~625~~	~~10 ug/l~~	Limited as Total Group II PAHs
	~~610 HPLC~~	~~0.05 ug/l~~	
	8270D[3]	see footnote	
INORGANIC PARAMETERS			
Total Arsenic (As)	ICP	5 ug/l	MA & NH = FW = 10 ug/l, MA & NH = SW = 36 ug/l
	~~Furnace AA~~	~~2 ug/l~~	

Prepared by NewFields 9/20/2005 Part 2 of 2 - Page 5 of 6

3.1 3

M51581: Chain of Custody
Page 8 of 9

15 of 30
ACCUTEST Laboratories
M51581

CHAIN OF CUSTODY ATTACHMENT - EPA NPDES RGP REQUIREMENTS
PART 2 of 2 (ACCUTEST)

PARAMETER	Minimum Levels and Test Methods		Discharge Effluent Limit
	METHOD	ML[1]	

LEGEND:
RGP = Remediation General Permit
Flame AA = Flame Atomic Absorption
ICP = Inductively Coupled Plasma
Furnace AA = Furnace Atomic Absorption
FW = Freshwater
SW = Saltwater
MA = State of Massachusetts
NH = State of New Hampshire

FOOTNOTES:

1. Minimum Level (ML) is the lowest level at which the analytical system gives a recognizable signal and acceptable calibration point for the analyte. The ML represents the lowest concentration at which an analyte can be measured with a known level of confidence. The ML is calculated by multiplying the laboratory-determined method detection limit by 3.18 (see 40 CFR Part 136, Appendix B) Where a minimum level (ML) is listed but a test method is not specified, permittee may use any of the available methods approved for use under 40 CFR 136, including alternatives approved by this permit, that meets ML. See EPA's "Methods and Guidance for the Analysis of Water" at www.epa.gov/water/owrccatalog.nsf. Where a test method is specified but ML is not listed for that Method, the lowest ML for listed methods must be used before concentration can be considered as "non-detect".
2. For measuring volatile organic compounds, Method 8260C (or the latest version) may be used as a substitute for CWA Methods 524.2, 602, 624, or 1624. Method 8260C must be preceded by Method 5030 as the preparation method. However, any method changes must be accompanied by documented quality assurance quality control (QA/QC) test to prove that the analytical process can achieve the lower detection limits of Method 8260C. For TBA and TAME the EPA advises no acid as a preservative.
3. For measuring semi-volatile organic compounds, Method 8270D may be used as a substitute for Methods 610, 625, or 1625. Method 8270D must be preceded by Method 3520C as the sample preparation method. In either case, the quality control requirements of Method 3500B must be taken into account. The sample preparation method must be specified with data analysis records. Method 8270D may be modified to provide lower detection and quantitation limits using Selected Ion Monitoring (SIM). Any method changes must be accompanied by documented quality assurance quality control (QA/QC) test results to prove that the analytical process can achieve the lower detection limits of Method 8270D.
4. GC - gas chromatography.
5. GCMS -gas chromatography/ mass spectrometry
6. LC-high pressure liquid chromatography.
7. Flame Atomic Absorption.
8. For measuring fuel oxygenates, Method 602 must be modified to include a heated purge.
9. The sum of individual phthalate compounds.
10. In the November 2002 WQC, EPA has revised the definition of total PCBs for aquatic life as "total PCBs is the sum of all homologue, all isomer, all congener, or all Aroclor analyses.
11. Method 1668a (HRGC/HRMS) has been proposed by EPA and is currently being validated. When approval of the method is finalized, it will be approved for use with this general permit
12. Methods 6010b and 200.7 for metals may only be used when sample prepared with SW-846 digestion method, Method 3010.
13. Any value below the ML shall be reported as zero.
14. Analysis of the influent samples shall use the test methods with the MLs at or below limits where practicable.

GC/MS Volatiles

QC Data Summaries

Includes the following where applicable:

- Method Blank Summaries
- Blank Spike Summaries
- Matrix Spike and Duplicate Summaries
- Surrogate Recovery Summaries

Method Blank Summary

Job Number: M51581
Account: SHELLWIC Shell Oil
Project: ENVTRAC:98997768 (REIMBMA) 846 Concord Street, Framingham, MA

Sample	File ID	DF	Analyzed	By	Prep Date	Prep Batch	Analytical Batch
MSP76-MB	P2239.D	1	10/14/05	AMY	n/a	n/a	MSP76

The QC reported here applies to the following samples: Method: SW846 8260B

M51581-1A

CAS No.	Compound	Result	RL	Units	Q
994-05-8	tert-Amyl Methyl Ether	ND	2.0	ug/l	
75-65-0	Tert Butyl Alcohol	ND	100	ug/l	

CAS No.	Surrogate Recoveries		Limits
1868-53-7	Dibromofluoromethane	113%	82-127%
2037-26-5	Toluene-D8	95%	88-112%
460-00-4	4-Bromofluorobenzene	102%	80-118%

Method Blank Summary

Job Number: M51581
Account: SHELLWIC Shell Oil
Project: ENVTRAC:98997768 (REIMBMA) 846 Concord Street, Framingham, MA

Sample	File ID	DF	Analyzed	By	Prep Date	Prep Batch	Analytical Batch
MSG2146-MB	G53833.D	1	10/18/05	AA	n/a	n/a	MSG2146

The QC reported here applies to the following samples: Method: SW846 8260B

M51581-1

CAS No.	Compound	Result	RL	Units	Q
67-64-1	Acetone	ND	5.0	ug/l	
71-43-2	Benzene	ND	0.50	ug/l	
56-23-5	Carbon tetrachloride	ND	1.0	ug/l	
95-50-1	1,2-Dichlorobenzene	ND	1.0	ug/l	
541-73-1	1,3-Dichlorobenzene	ND	1.0	ug/l	
106-46-7	1,4-Dichlorobenzene	ND	1.0	ug/l	
75-34-3	1,1-Dichloroethane	ND	1.0	ug/l	
107-06-2	1,2-Dichloroethane	ND	1.0	ug/l	
75-35-4	1,1-Dichloroethene	ND	1.0	ug/l	
156-59-2	cis-1,2-Dichloroethene	ND	1.0	ug/l	
123-91-1	1,4-Dioxane	ND	25	ug/l	
100-41-4	Ethylbenzene	ND	1.0	ug/l	
1634-04-4	Methyl Tert Butyl Ether	ND	1.0	ug/l	
75-09-2	Methylene chloride	ND	2.0	ug/l	
127-18-4	Tetrachloroethene	ND	1.0	ug/l	
108-88-3	Toluene	ND	1.0	ug/l	
71-55-6	1,1,1-Trichloroethane	ND	1.0	ug/l	
79-00-5	1,1,2-Trichloroethane	ND	1.0	ug/l	
79-01-6	Trichloroethene	ND	1.0	ug/l	
75-01-4	Vinyl chloride	ND	1.0	ug/l	
1330-20-7	Xylene (total)	ND	1.0	ug/l	

CAS No.	Surrogate Recoveries		Limits
1868-53-7	Dibromofluoromethane	107%	82-127%
2037-26-5	Toluene-D8	97%	88-112%
460-00-4	4-Bromofluorobenzene	98%	80-118%

Method Blank Summary

Job Number: M51581
Account: SHELLWIC Shell Oil
Project: ENVTRAC:98997768 (REIMBMA) 846 Concord Street, Framingham, MA

Sample	File ID	DF	Analyzed	By	Prep Date	Prep Batch	Analytical Batch
MSP76-MB1	P2306.D	1	10/18/05	AMY	n/a	n/a	MSP76

The QC reported here applies to the following samples: Method: SW846 8260B

M51635-5MS, M51635-5MSD

CAS No.	Compound	Result	RL	Units	Q
994-05-8	tert-Amyl Methyl Ether	ND	2.0	ug/l	
75-65-0	Tert Butyl Alcohol	ND	100	ug/l	

CAS No.	Surrogate Recoveries		Limits
1868-53-7	Dibromofluoromethane	101%	82-127%
2037-26-5	Toluene-D8	100%	88-112%
460-00-4	4-Bromofluorobenzene	101%	80-118%

Blank Spike Summary

Job Number: M51581
Account: SHELLWIC Shell Oil
Project: ENVTRAC:98997768 (REIMBMA) 846 Concord Street, Framingham, MA

Sample	File ID	DF	Analyzed	By	Prep Date	Prep Batch	Analytical Batch
MSP76-BS	P2237.D	1	10/14/05	AMY	n/a	n/a	MSP76

The QC reported here applies to the following samples: Method: SW846 8260B

M51581-1A

CAS No.	Compound	Spike ug/l	BSP ug/l	BSP %	Limits
994-05-8	tert-Amyl Methyl Ether	50	47.0	94	61-139
75-65-0	Tert Butyl Alcohol	500	500	100	42-161

CAS No.	Surrogate Recoveries	BSP	Limits
1868-53-7	Dibromofluoromethane	108%	82-127%
2037-26-5	Toluene-D8	99%	88-112%
460-00-4	4-Bromofluorobenzene	103%	80-118%

Blank Spike/Blank Spike Duplicate Summary

Job Number: M51581
Account: SHELLWIC Shell Oil
Project: ENVTRAC:98997768 (REIMBMA) 846 Concord Street, Framingham, MA

Sample	File ID	DF	Analyzed	By	Prep Date	Prep Batch	Analytical Batch
MSG2146-BS	G53830.D	1	10/18/05	AA	n/a	n/a	MSG2146
MSG2146-BSD	G53831.D	1	10/18/05	AA	n/a	n/a	MSG2146

The QC reported here applies to the following samples: Method: SW846 8260B

M51581-1

CAS No.	Compound	Spike ug/l	BSP ug/l	BSP %	BSD ug/l	BSD %	RPD	Limits Rec/RPD
67-64-1	Acetone	50	47.9	96	37.9	76	23	31-150/25
71-43-2	Benzene	50	47.1	94	47.8	96	1	73-127/25
56-23-5	Carbon tetrachloride	50	48.5	97	50.1	100	3	70-141/25
95-50-1	1,2-Dichlorobenzene	50	51.1	102	49.7	99	3	75-125/25
541-73-1	1,3-Dichlorobenzene	50	50.7	101	50.0	100	1	76-124/25
106-46-7	1,4-Dichlorobenzene	50	50.0	100	48.7	97	3	76-127/25
75-34-3	1,1-Dichloroethane	50	51.4	103	52.0	104	1	70-136/25
107-06-2	1,2-Dichloroethane	50	47.8	96	47.2	94	1	68-137/25
75-35-4	1,1-Dichloroethene	50	53.3	107	54.6	109	2	65-142/25
156-59-2	cis-1,2-Dichloroethene	50	50.2	100	50.4	101	0	72-130/25
123-91-1	1,4-Dioxane	250	313	125	267	107	16	50-140/25
100-41-4	Ethylbenzene	50	49.9	100	50.3	101	1	77-126/25
1634-04-4	Methyl Tert Butyl Ether	50	47.2	94	44.7	89	5	65-135/25
75-09-2	Methylene chloride	50	50.3	101	50.8	102	1	67-136/25
127-18-4	Tetrachloroethene	50	52.2	104	52.7	105	1	66-142/25
108-88-3	Toluene	50	47.0	94	47.8	96	2	76-124/25
71-55-6	1,1,1-Trichloroethane	50	48.6	97	49.7	99	2	71-137/25
79-00-5	1,1,2-Trichloroethane	50	49.0	98	47.9	96	2	68-134/25
79-01-6	Trichloroethene	50	47.7	95	48.7	97	2	71-130/25
75-01-4	Vinyl chloride	50	64.2	128	64.7	129	1	46-151/25
1330-20-7	Xylene (total)	150	149	99	149	99	0	78-129/25

CAS No.	Surrogate Recoveries	BSP	BSD	Limits
1868-53-7	Dibromofluoromethane	104%	104%	82-127%
2037-26-5	Toluene-D8	96%	98%	88-112%
460-00-4	4-Bromofluorobenzene	99%	99%	80-118%

Matrix Spike/Matrix Spike Duplicate Summary

Job Number: M51581
Account: SHELLWIC Shell Oil
Project: ENVTRAC:98997768 (REIMBMA) 846 Concord Street, Framingham, MA

Sample	File ID	DF	Analyzed	By	Prep Date	Prep Batch	Analytical Batch
M51635-5MS	P2319.D	5	10/18/05	AMY	n/a	n/a	MSP76
M51635-5MSD	P2320.D	5	10/18/05	AMY	n/a	n/a	MSP76
M51635-5	P2318.D	1	10/18/05	AMY	n/a	n/a	MSP76

The QC reported here applies to the following samples: Method: SW846 8260B

M51581-1A

CAS No.	Compound	M51635-5 ug/l	Q	Spike ug/l	MS ug/l	MS %	MSD ug/l	MSD %	RPD	Limits Rec/RPD
994-05-8	tert-Amyl Methyl Ether	ND		250	263	105	263	105	0	54-144/20
75-65-0	Tert Butyl Alcohol	628		2500	3340	108	3330	108	0	31-170/29

CAS No.	Surrogate Recoveries	MS	MSD	M51635-5	Limits
1868-53-7	Dibromofluoromethane	101%	101%	101%	82-127%
2037-26-5	Toluene-D8	100%	101%	100%	88-112%
460-00-4	4-Bromofluorobenzene	97%	97%	98%	80-118%

Matrix Spike/Matrix Spike Duplicate Summary

Job Number: M51581
Account: SHELLWIC Shell Oil
Project: ENVTRAC:98997768 (REIMBMA) 846 Concord Street, Framingham, MA

Sample	File ID	DF	Analyzed	By	Prep Date	Prep Batch	Analytical Batch
M51465-2MS	G53854.D	5	10/18/05	AA	n/a	n/a	MSG2146
M51465-2MSD	G53855.D	5	10/18/05	AA	n/a	n/a	MSG2146
M51465-2	G53848.D	1	10/18/05	AA	n/a	n/a	MSG2146

The QC reported here applies to the following samples: Method: SW846 8260B

M51581-1

CAS No.	Compound	M51465-2 ug/l	Q	Spike ug/l	MS ug/l	MS %	MSD ug/l	MSD %	RPD	Limits Rec/RPD
67-64-1	Acetone	ND		250	234	94	220	88	6	30-150/35
71-43-2	Benzene	ND		250	219	88	229	92	4	67-132/20
56-23-5	Carbon tetrachloride	ND		250	229	92	240	96	5	63-144/20
95-50-1	1,2-Dichlorobenzene	ND		250	244	98	249	100	2	75-123/20
541-73-1	1,3-Dichlorobenzene	ND		250	240	96	246	98	2	75-122/20
106-46-7	1,4-Dichlorobenzene	ND		250	238	95	243	97	2	77-125/20
75-34-3	1,1-Dichloroethane	ND		250	241	96	253	101	5	66-141/20
107-06-2	1,2-Dichloroethane	ND		250	231	92	232	93	0	61-144/20
75-35-4	1,1-Dichloroethene	ND		250	245	98	267	107	9	57-150/20
156-59-2	cis-1,2-Dichloroethene	ND		250	238	95	247	99	4	69-133/20
123-91-1	1,4-Dioxane	ND		1250	1340	107	1450	116	8	43-141/32
100-41-4	Ethylbenzene	ND		250	235	94	245	98	4	72-129/20
1634-04-4	Methyl Tert Butyl Ether	ND		250	223	89	224	90	0	61-137/20
75-09-2	Methylene chloride	ND		250	239	96	247	99	3	64-143/20
127-18-4	Tetrachloroethene	ND		250	243	97	255	102	5	57-145/20
108-88-3	Toluene	ND		250	221	88	231	92	4	69-129/20
71-55-6	1,1,1-Trichloroethane	ND		250	229	92	243	97	6	65-144/20
79-00-5	1,1,2-Trichloroethane	ND		250	239	96	240	96	0	63-138/20
79-01-6	Trichloroethene	ND		250	223	89	233	93	4	67-132/20
75-01-4	Vinyl chloride	ND		250	292	117	319	128	9	39-150/23
1330-20-7	Xylene (total)	ND		750	704	94	731	97	4	72-133/20

CAS No.	Surrogate Recoveries	MS	MSD	M51465-2	Limits
1868-53-7	Dibromofluoromethane	105%	106%	102%	82-127%
2037-26-5	Toluene-D8	97%	97%	97%	88-112%
460-00-4	4-Bromofluorobenzene	98%	98%	96%	80-118%

Volatile Surrogate Recovery Summary

Job Number: M51581
Account: SHELLWIC Shell Oil
Project: ENVTRAC:98997768 (REIMBMA) 846 Concord Street, Framingham, MA

Method: SW846 8260B Matrix: AQ

Samples and QC shown here apply to the above method

Lab Sample ID	Lab File ID	S1	S2	S3
M51581-1	G53842.D	99.0	97.0	95.0
M51581-1A	P2245.D	132.0* [a]	96.0	113.0
M51465-2MS	G53854.D	105.0	97.0	98.0
M51465-2MSD	G53855.D	106.0	97.0	98.0
M51635-5MS	P2319.D	101.0	100.0	97.0
M51635-5MSD	P2320.D	101.0	101.0	97.0
MSG2146-BS	G53830.D	104.0	96.0	99.0
MSG2146-BSD	G53831.D	104.0	98.0	99.0
MSG2146-MB	G53833.D	107.0	97.0	98.0
MSP76-BS	P2237.D	108.0	99.0	103.0
MSP76-MB	P2239.D	113.0	95.0	102.0
MSP76-MB1	P2306.D	101.0	100.0	101.0

Surrogate Compounds	Recovery Limits
S1 = Dibromofluoromethane	82-127%
S2 = Toluene-D8	88-112%
S3 = 4-Bromofluorobenzene	80-118%

(a) Outside control limits due to possible matrix interference. Confirmed by reanalysis.

GC Volatiles

QC Data Summaries

Includes the following where applicable:

- Method Blank Summaries
- Blank Spike Summaries
- Matrix Spike and Duplicate Summaries
- Surrogate Recovery Summaries

Method Blank Summary

Job Number: M51581
Account: SHELLWIC Shell Oil
Project: ENVTRAC:98997768 (REIMBMA) 846 Concord Street, Framingham, MA

Sample	File ID	DF	Analyzed	By	Prep Date	Prep Batch	Analytical Batch
OP9830-MB	YZ29103.D	1	10/15/05	CZ	10/14/05	OP9830	GYZ1210

The QC reported here applies to the following samples: Method: EPA 504

M51581-1

CAS No.	Compound	Result	RL	Units	Q
106-93-4	1,2-Dibromoethane	ND	0.015	ug/l	

CAS No.	Surrogate Recoveries		Limits
460-00-4	Bromofluorobenzene (S)	104%	26-158%
460-00-4	Bromofluorobenzene (S)	127%	26-158%

Blank Spike Summary

Job Number: M51581
Account: SHELLWIC Shell Oil
Project: ENVTRAC:98997768 (REIMBMA) 846 Concord Street, Framingham, MA

Sample	File ID	DF	Analyzed	By	Prep Date	Prep Batch	Analytical Batch
OP9830-BS	YZ29104.D	1	10/15/05	CZ	10/14/05	OP9830	GYZ1210

The QC reported here applies to the following samples: Method: EPA 504

M51581-1

CAS No.	Compound	Spike ug/l	BSP ug/l	BSP %	Limits
106-93-4	1,2-Dibromoethane	0.071	0.051	72	70-130

CAS No.	Surrogate Recoveries	BSP	Limits
460-00-4	Bromofluorobenzene (S)	100%	26-158%
460-00-4	Bromofluorobenzene (S)	123%	26-158%

Matrix Spike/Matrix Spike Duplicate Summary

Job Number: M51581
Account: SHELLWIC Shell Oil
Project: ENVTRAC:98997768 (REIMBMA) 846 Concord Street, Framingham, MA

Sample	File ID	DF	Analyzed	By	Prep Date	Prep Batch	Analytical Batch
OP9830-MS	YZ29105.D	1	10/15/05	CZ	10/14/05	OP9830	GYZ1210
OP9830-MSD	YZ29106.D	1	10/15/05	CZ	10/14/05	OP9830	GYZ1210
M51719-1	YZ29107.D	1	10/15/05	CZ	10/14/05	OP9830	GYZ1210

The QC reported here applies to the following samples: Method: EPA 504

M51581-1

CAS No.	Compound	M51719-1 ug/l	Q	Spike ug/l	MS ug/l	MS %	MSD ug/l	MSD %	RPD	Limits Rec/RPD
106-93-4	1,2-Dibromoethane	ND		0.071	0.061	86	0.057	80	7	65-135/30

CAS No.	Surrogate Recoveries	MS	MSD	M51719-1	Limits
460-00-4	Bromofluorobenzene (S)	122%	111%	123%	26-158%
460-00-4	Bromofluorobenzene (S)	138%	123%	137%	26-158%

Volatile Surrogate Recovery Summary

Job Number: M51581
Account: SHELLWIC Shell Oil
Project: ENVTRAC:98997768 (REIMBMA) 846 Concord Street, Framingham, MA

Method: EPA 504 Matrix: AQ

Samples and QC shown here apply to the above method

Lab Sample ID	Lab File ID	S1 [a]
M51581-1	YZ29110.D	91.0
OP9830-BS	YZ29104.D	100.0
OP9830-MB	YZ29103.D	104.0
OP9830-MS	YZ29105.D	122.0
OP9830-MSD	YZ29106.D	111.0

Surrogate Compounds	Recovery Limits
S1 = Bromofluorobenzene (S)	26-158%

(a) Recovery from GC signal #1

New England ACCUTEST Laboratories

10/22/05

Technical Report for

Shell Oil

ENVTRAC:98997768 846 Concord St., Framingham, MA

Accutest Job Number: M51582

Sampling Date: 10/05/05

Report to:

EnviroTrac

msmith@newfields.com

Total number of pages in report: 35

ACCREDITED IN ACCORDANCE WITH nelac

Test results contained within this data package meet the requirements of the National Environmental Laboratory Accreditation Conference and/or state specific certification programs as applicable.

Reza Pand
Lab Director

Certifications: MA (M-MA136) CT (PH-0109) NH (250204) RI (00071) ME (MA136) FL (E87579) NY (23346) NJ (MA926) NAVY USACE

This report shall not be reproduced, except in its entirety, without the written approval of Accutest Laboratories.

Sections: 1 2 3 4 5 6

Table of Contents

-1-

Section 1: Sample Summary **3**
Section 2: Sample Results **4**
2.1: M51582-1: BELLA COSTA INFLUENT 4
2.2: M51582-1A: BELLA COSTA INFLUENT 7
Section 3: Misc. Forms **8**
3.1: Chain of Custody 9
Section 4: GC/MS Semi-volatiles - QC Data Summaries **18**
4.1: Method Blank Summary 19
4.2: Blank Spike Summary 21
4.3: Blank Spike/Blank Spike Duplicate Summary 22
4.4: Matrix Spike/Matrix Spike Duplicate Summary 23
4.5: Surrogate Recovery Summaries 25
Section 5: Metals Analysis - QC Data Summaries **27**
5.1: Prep QC MP7753: As 28
Section 6: General Chemistry - QC Data Summaries **32**
6.1: Method Blank and Spike Results Summary 33
6.2: Duplicate Results Summary 34
6.3: Matrix Spike Results Summary 35

Sample Summary

Shell Oil

Job No: M51582

ENVTRAC:98997768 846 Concord St., Framingham, MA

Sample Number	Collected Date	Time By	Received	Matrix Code	Type	Client Sample ID
M51582-1	10/05/05	14:45 AA	10/11/05	AQ	Influent	BELLA COSTA INFLUENT
M51582-1A	10/05/05	14:45 AA	10/11/05	AQ	Influent	BELLA COSTA INFLUENT

Accutest Laboratories

Report of Analysis

Client Sample ID:	BELLA COSTA INFLUENT		
Lab Sample ID:	M51582-1	Date Sampled:	10/05/05
Matrix:	AQ - Influent	Date Received:	10/11/05
Method:	SW846 8270C SW846 3510C	Percent Solids:	n/a
Project:	ENVTRAC:98997768 846 Concord St., Framingham, MA		

	File ID	DF	Analyzed	By	Prep Date	Prep Batch	Analytical Batch
Run #1	E24883.D	1	10/19/05	PN	10/12/05	OP9821	MSE1296
Run #2							

	Initial Volume	Final Volume
Run #1	980 ml	1.0 ml
Run #2		

ABN PPL List

CAS No.	Compound	Result	RL	Units	Q
95-57-8	2-Chlorophenol	ND	5.1	ug/l	
59-50-7	4-Chloro-3-methyl phenol	ND	10	ug/l	
120-83-2	2,4-Dichlorophenol	ND	10	ug/l	
105-67-9	2,4-Dimethylphenol	ND	10	ug/l	
51-28-5	2,4-Dinitrophenol	ND	20	ug/l	
534-52-1	4,6-Dinitro-o-cresol	ND	10	ug/l	
88-75-5	2-Nitrophenol	ND	10	ug/l	
100-02-7	4-Nitrophenol	ND	20	ug/l	
108-95-2	Phenol	ND	5.1	ug/l	
88-06-2	2,4,6-Trichlorophenol	ND	10	ug/l	
85-68-7	Butyl benzyl phthalate	ND	10	ug/l	
84-74-2	Di-n-butyl phthalate	ND	10	ug/l	
117-84-0	Di-n-octyl phthalate	ND	10	ug/l	
84-66-2	Diethyl phthalate	ND	10	ug/l	
131-11-3	Dimethyl phthalate	ND	10	ug/l	
117-81-7	bis(2-Ethylhexyl)phthalate	ND	10	ug/l	

CAS No.	Surrogate Recoveries	Run# 1	Run# 2	Limits
367-12-4	2-Fluorophenol	25%		10-120%
4165-62-2	Phenol-d5	25%		10-120%
118-79-6	2,4,6-Tribromophenol	37%		31-123%
4165-60-0	Nitrobenzene-d5	69%		32-120%
321-60-8	2-Fluorobiphenyl	64%		32-120%
1718-51-0	Terphenyl-d14	59%		33-123%

ND = Not detected
RL = Reporting Limit
E = Indicates value exceeds calibration range
J = Indicates an estimated value
B = Indicates analyte found in associated method blank
N = Indicates presumptive evidence of a compound

Accutest Laboratories

Report of Analysis

Client Sample ID:	BELLA COSTA INFLUENT		
Lab Sample ID:	M51582-1	Date Sampled:	10/05/05
Matrix:	AQ - Influent	Date Received:	10/11/05
		Percent Solids:	n/a
Project:	ENVTRAC:98997768 846 Concord St., Framingham, MA		

Metals Analysis

Analyte	Result	RL	Units	DF	Prep	Analyzed By	Method	Prep Method
Arsenic	< 5.0	5.0	ug/l	1	10/12/05	10/13/05 AC	SW846 6010B [1]	SW846 3010A [2]

(1) Instrument QC Batch: MA6347
(2) Prep QC Batch: MP7753

RL = Reporting Limit

Accutest Laboratories

Report of Analysis

Client Sample ID:	BELLA COSTA INFLUENT		
Lab Sample ID:	M51582-1	Date Sampled:	10/05/05
Matrix:	AQ - Influent	Date Received:	10/11/05
		Percent Solids:	n/a
Project:	ENVTRAC:98997768 846 Concord St., Framingham, MA		

General Chemistry

Analyte	Result	RL	Units	DF	Analyzed	By	Method
Cyanide	< 0.010	0.010	mg/l	1	10/13/05 16:45	MA	EPA 335.3

RL = Reporting Limit

Accutest Laboratories

Report of Analysis

Client Sample ID:	BELLA COSTA INFLUENT		
Lab Sample ID:	M51582-1A	Date Sampled:	10/05/05
Matrix:	AQ - Influent	Date Received:	10/11/05
Method:	SW846 8270C BY SIM SW846 3510C	Percent Solids:	n/a
Project:	ENVTRAC:98997768 846 Concord St., Framingham, MA		

	File ID	DF	Analyzed	By	Prep Date	Prep Batch	Analytical Batch
Run #1	F16455.D	1	10/19/05	PN	10/12/05	OP9822	MSF893
Run #2							

	Initial Volume	Final Volume
Run #1	980 ml	1.0 ml
Run #2		

ABN Special List

CAS No.	Compound	Result	RL	Units	Q
87-86-5	Pentachlorophenol	ND	1.0	ug/l	
95-95-4	2,4,5-Trichlorophenol	ND	1.0	ug/l	
83-32-9	Acenaphthene	ND	0.10	ug/l	
208-96-8	Acenaphthylene	ND	0.10	ug/l	
120-12-7	Anthracene	ND	0.10	ug/l	
56-55-3	Benzo(a)anthracene	ND	0.051	ug/l	
50-32-8	Benzo(a)pyrene	ND	0.10	ug/l	
205-99-2	Benzo(b)fluoranthene	ND	0.051	ug/l	
191-24-2	Benzo(g,h,i)perylene	ND	0.10	ug/l	
207-08-9	Benzo(k)fluoranthene	ND	0.10	ug/l	
218-01-9	Chrysene	ND	0.10	ug/l	
53-70-3	Dibenzo(a,h)anthracene	ND	0.10	ug/l	
206-44-0	Fluoranthene	ND	0.10	ug/l	
86-73-7	Fluorene	ND	0.10	ug/l	
193-39-5	Indeno(1,2,3-cd)pyrene	ND	0.10	ug/l	
91-57-6	2-Methylnaphthalene	ND	0.20	ug/l	
91-20-3	Naphthalene	ND	0.10	ug/l	
85-01-8	Phenanthrene	ND	0.10	ug/l	
129-00-0	Pyrene	ND	0.10	ug/l	

CAS No.	Surrogate Recoveries	Run# 1	Run# 2	Limits
367-12-4	2-Fluorophenol	32%		10-120%
4165-62-2	Phenol-d5	32%		10-120%
118-79-6	2,4,6-Tribromophenol	52%		23-135%
4165-60-0	Nitrobenzene-d5	68%		30-120%
321-60-8	2-Fluorobiphenyl	82%		25-120%
1718-51-0	Terphenyl-d14	75%		24-132%

ND = Not detected
RL = Reporting Limit
E = Indicates value exceeds calibration range

J = Indicates an estimated value
B = Indicates analyte found in associated method blank
N = Indicates presumptive evidence of a compound

Misc. Forms

Custody Documents and Other Forms

Includes the following where applicable:

- Chain of Custody

ACCUTEST Laboratories

CHAIN OF CUSTODY

495 TECHNOLOGY CENTER WEST • BUILDING ONE
MARLBOROUGH, MA 01752
TEL: 508-481-6200 • FAX: 508-481-7753

ACCUTEST JOB #: M51582
ACCUTEST QUOTE #:

CLIENT INFORMATION

NAME: EnviroTrac Ltd
ADDRESS: 1400 Providence Hwy Suite 2100
CITY: Norwood STATE: MA ZIP: 02062
SEND REPORT TO: Will Harrison
PHONE #: 781-769-5005

FACILITY INFORMATION

PROJECT NAME: ECI Framingham 846
LOCATION: 846 Concord St
PROJECT NO.: Framingham MA
FAX #: 781-769-9345

ANALYTICAL INFORMATION

ACCUTEST SAMPLE #	FIELD ID / POINT OF COLLECTION	COLLECTION DATE	COLLECTION TIME	SAMPLED BY:	MATRIX	# OF BOTTLES	PRESERVATION HCl	NaOH	HNO3	H2SO4	NONE	PAHs by SIM	PAHs incl. total phenols	pentachlorophenol, total phthalates, bis-2-ethyloxyl-phthalate	Total AS	Total Cyanide	LAB USE ONLY
-1	Bella Costa Influent	10-5-05	2:45	AA	GW	~~1~~ 3 SPK		X	X		X	X	X		X	X	*QA/QC Data Package Re
																	*Lab must rep ML. RL=M

MATRIX CODES

DW - DRINKING WATER
GW - GROUND WATER
WW - WASTE WATER
SO - SOIL
SL - SLUDGE
OI - OIL
LIQ - OTHER LIQUID
SOL - OTHER SOLID

DATA TURNAROUND INFORMATION

- ☐ 14 DAYS STANDARD
- ☒ 7 DAYS RUSH
- ☐ 48 HOUR EMERGENCY
- ☐ OTHER

APPROVED BY:

14 DAY TURNAROUND HARDCOPY. EMERGENCY OR RUSH IS FAX DATA UNLESS PREVIOUSLY APPROVED

DATA DELIVERABLE INFORMATION

- ☒ STANDARD
- ☐ COMMERCIAL "B" 6C, 2D, 15L
- ☐ DISK DELIVERABLE
- ☐ STATE FORMS
- ☐ OTHER (SPECIFY)

COMMENTS/REMARKS

*Include chromatograms w/lab report
*GW-1 Detection Limits; *Bill Motiva
Direct SAP# 137760 Inc# 98977768
Attn: Dave Weeks

SAMPLE CUSTODY MUST BE DOCUMENTED BELOW EACH TIME SAMPLES CHANGE POSSESION, INCLUDING COURIER DELIVERY

RELINQUISHED BY SAMPLER:	DATE TIME:	RECEIVED BY:	RELINQUISHED BY:	DATE TIME:	RECEIVED BY:
1. [signature]	10-5-05 5:30 pm	1. Secure ET Fridge	2. [signature]	10/11/05 1035	2. [signature]
RELINQUISHED BY: 3. [signature]	DATE TIME: 10/11/05 12:40	RECEIVED BY: 3. [signature]	RELINQUISHED BY: 4.	DATE TIME:	RECEIVED BY: 4.
RELINQUISHED BY: 5.	DATE TIME:	RECEIVED BY: 5.	SEAL #	PRESERVE WHERE APPLICABLE ☐	ON ICE ☐ TEMPERATURE 2.0 C

M51582: Chain of Custody
Page 1 of 9

Accutest

CHAIN OF CUSTODY ATTACHMENT - EPA NPDES RGP REQUIREMENTS
PART 1 of 2

PARAMETER	Minimum Levels and Test Methods METHOD	ML[1]	Discharge Effluent Limit
MISCELLANEOUS COMPOUNDS			
Total Suspended Solids	160.2	5 mg/l	30 mg/l
Total Petroleum Hydrocarbons	1664	5 mg/l	5.0 mg/l
PCBs			
Total Polychlorinated Biphenyls (PCBs)	608	0.5 ug/l	0.000064 ug/l (compliance limit = ML of test method used)
	~~1668a[14]~~	~~0.00005 ug/l~~	
INORGANIC PARAMETERS			
Total Chromium	~~Flame AA (218.1)~~	~~none specified~~	Chromium III: MA = FW = 48.8 ug/l, MA = SW = 100 ug/l, NH = FW = 27.7 ug/l, NH = SW = 100 ug/l
	ICP (200.7[11])	10 ug/l	
	~~ICP (200.8)~~	~~10 ug/l~~	
	~~ICP (200.15)~~	~~10 ug/l~~	
	~~ICP (1620)~~	~~10 ug/l~~	
	~~Furnace AA (200.9)~~	~~5 ug/l~~	
	~~Other~~	~~50 ug/l~~	
Total Copper (Cu)	~~Flame AA~~	~~20 ug/l~~	MA = FW = 5.2 ug/l, MA = SW = 3.7 ug/l, NH = FW = 2.9 ug/l, NH = SW = 3.7 ug/l
	ICP	5 ug/l	
	~~Furnace AA~~	~~3 ug/l~~	
Total Mercury (Hg)	Other	0.2 ug/l	MA & NH = FW = 0.9 ug/l, MA & NH = SW = 1.1 ug/l
Total Iron (Fe)	~~6010b~~	~~see footnote~~	MA & NH = 1,000 ug/l
	200.7[12]	see footnote	

Prepared by NewFields 9/20/2005 Part 1 of 2 - Page 1 of 2

3.1

M51582: Chain of Custody
Page 2 of 9

CHAIN OF CUSTODY ATTACHMENT - EPA NPDES RGP REQUIREMENTS
PART 1 of 2

	Minimum Levels and Test Methods		
PARAMETER	METHOD	ML[1]	Discharge Effluent Limit

LEGEND:
RGP = Remediation General Permit
Flame AA = Flame Atomic Absorption
ICP = Inductively Coupled Plasma
Furnace AA = Furnace Atomic Absorption
FW = Freshwater
SW = Saltwater
MA = State of Massachusetts
NH = State of New Hampshire

FOOTNOTES:

1. Minimum Level (ML) is the lowest level at which the analytical system gives a recognizable signal and acceptable calibration point for the analyte. The ML represents the lowest concentration at which an analyte can be measured with a known level of confidence. The ML is calculated by multiplying the laboratory-determined method detection limit by 3.18 (see 40 CFR Part 136, Appendix B) Where a minimum level (ML) is listed but a test method is not specified, permittee may use any of the available methods approved for use under 40 CFR 136, including alternatives approved by this permit, that meets ML. See EPA's "Methods and Guidance for the Analysis of Water" at www.epa.gov/water/owrccatalog.nsf. Where a test method is specified but ML is not listed for that Method, the lowest ML for listed methods must be used before concentration can be considered as "non-detect".
2. For measuring volatile organic compounds, Method 8260C (or the latest version) may be used as a substitute for CWA Methods 524.2, 602, 624, or 1624. Method 8260C must be preceded by Method 5030 as the preparation method. However, any method changes must be accompanied by documented quality assurance quality control (QA/QC) test to prove that the analytical process can achieve the lower detection limits of Method 8260C. For TBA and TAME the EPA advises no acid as a preservative.
3. For measuring semi-volatile organic compounds, Method 8270D may be used as a substitute for Methods 610, 625, or 1625. Method 8270D must be preceded by Method 3520C as the sample preparation method. In either case, the quality control requirements of Method 3500B must be taken into account. The sample preparation method must be specified with data analysis records. Method 8270D may be modified to provide lower detection and quantitation limits using Selected Ion Monitoring (SIM). Any method changes must be accompanied by documented quality assurance quality control (QA/QC) test results to prove that the analytical process can achieve the lower detection limits of Method 8270D.
4. GC - gas chromatography.
5. GCMS -gas chromatography/ mass spectrometry
6. LC-high pressure liquid chromatography.
7. Flame Atomic Absorption.
8. For measuring fuel oxygenates, Method 602 must be modified to include a heated purge.
9. The sum of individual phthalate compounds.
10. In the November 2002 WQC, EPA has revised the definition of total PCBs for aquatic life as "total PCBs is the sum of all homologue, all isomer, all congener, or all Aroclor analyses.
11. Method 1668a (HRGC/HRMS) has been proposed by EPA and is currently being validated. When approval of the method is finalized, it will be approved for use with this general permit
12. Methods 6010b and 200.7 for metals may only be used when sample prepared with SW-846 digestion method, Method 3010.
13. Any value below the ML shall be reported as zero.
14. Analysis of the influent samples shall use the test methods with the MLs at or below limits where practicable.

CHAIN OF CUSTODY ATTACHMENT - EPA NPDES RGP REQUIREMENTS
PART 2 of 2 (ACCUTEST)

PARAMETER	Minimum Levels and Test Methods METHOD	ML[1]	Discharge Effluent Limit
MISCELLANEOUS COMPOUNDS			
Cyanide (total)	335.4	10 ug/l	MA & NH = SW = 1.0 ug/l, MA & NH = FW = 5.2 ug/l (compliance limit = ML = 10 ug/l)
VOLATILE ORGANIC COMPOUNDS			
Benzene	~~602~~	~~0.5 ug/l~~	5.0 ug/l
	~~624~~	~~2 ug/l~~	
	8260C[2]	see footnote	
Toluene	~~602~~	~~0.5 ug/l~~	Limited as Total BTEX
	~~624~~	~~2 ug/l~~	
	8260C[2]	see footnote	
Ethylbenzene	~~602~~	~~0.5 ug/l~~	Limited as Total BTEX
	~~624~~	~~2 ug/l~~	
	8260C[2]	see footnote	
Xylenes (total)	~~602~~	~~0.5 ug/l~~	Limited as Total BTEX
	~~1624~~	~~10 ug/l~~	
	8260C[2]	see footnote	
Total BTEX	~~602~~	~~0.5 ug/l~~	100 ug/l
	~~624~~	~~2 ug/l~~	
	8260C[2]	see footnote	
Ethylene Dibromide (EDB), 1,2-Dibromomethane	~~818~~	~~1.0 ug/l~~	0.05 ug/l (must use method 504.1 for sites certifying this compound is 'not present')
	504.1	0.01 ug/l	
	~~524.2~~	~~0.1 ug/l~~	
	~~8260C[2]~~	~~see footnote~~	
Methyl tert-butyl ether (MTBE)	~~602[8]~~	~~0.5 ug/l~~	70 ug/l
	~~524.2~~	~~5.0 ug/l~~	
	8260C[2]	see footnote	
tert-Butyl Alcohol (TBA)	~~602[8]~~	~~0.5 ug/l~~	Monitor Only
	~~1666~~	~~100 ug/l~~	
	8260C[2]	see footnote	
tert-Amyl Methyl Ether (TAME)	~~602[8]~~	~~0.5 ug/l~~	Monitor Only
	8260C[2]	see footnote	
Naphthalene	~~610 (GC/FID)~~	~~10 ug/l~~	20 ug/l
	~~625~~	~~2 ug/l~~	
	~~524.2~~	~~5 ug/l~~	
	~~610 HPLC~~	~~0.2 ug/l~~	
	8270D[3]	see footnote	
Carbon Tetrachloride	~~601~~	~~0.5 ug/l~~	4.4 ug/l
	~~624~~	~~2 ug/l~~	
	~~1624~~	~~2 ug/l~~	
	8260C[2]	see footnote	
	~~601~~	~~0.5 ug/l~~	

CHAIN OF CUSTODY ATTACHMENT - EPA NPDES RGP REQUIREMENTS
PART 2 of 2 (ACCUTEST)

PARAMETER	Minimum Levels and Test Methods		Discharge Effluent Limit
	METHOD	ML[1]	
1,4-Dichlorobenzene (p-DCB)	~~602~~	~~0.5 ug/l~~	5.0 ug/l
	~~624~~	~~2 ug/l~~	
	~~625~~	~~2 ug/l~~	
	8260C[2]	see footnote	
1,2-Dichlorobenzene (o-DCB)	~~601~~	~~0.5 ug/l~~	600 ug/l
	~~602~~	~~0.5 ug/l~~	
	~~624~~	~~2 ug/l~~	
	~~625~~	~~2 ug/l~~	
	8260C[2]	see footnote	
1,3-Dichlorobenzene (m-DCB)	~~601~~	~~0.5 ug/l~~	320 ug/l
	~~602~~	~~0.5 ug/l~~	
	~~624~~	~~2 ug/l~~	
	~~625~~	~~2 ug/l~~	
	8260C[2]	see footnote	
1,1 Dichloroethane (DCA)	~~601~~	~~0.5 ug/l~~	70 ug/l
	~~624~~	~~1 ug/l~~	
	8260C[2]	see footnote	
1,2 Dichloroethane (DCA)	~~601~~	~~0.5 ug/l~~	5.0 ug/l
	~~624~~	~~2 ug/l~~	
	8260C[2]	see footnote	
1,1 Dichloroethylene (DCE)	~~601~~	~~0.5 ug/l~~	3.2 ug/l
	~~624~~	~~2 ug/l~~	
	8260C[2]	see footnote	
cis-1,2 Dichloro-ethylene (DCE)	~~601~~	~~0.5 ug/l~~	70 ug/l
	~~624~~	~~2 ug/l~~	
	8260C[2]	see footnote	
Dichloromethane (Methylene Chloride)	~~601~~	~~0.5 ug/l~~	4.6 ug/l
	~~624~~	~~2 ug/l~~	
	8260C[2]	see footnote	
Tetrachloroethylene (PCE)	~~601~~	~~0.5 ug/l~~	5.0 ug/l
	~~624~~	~~2 ug/l~~	
	8260C[2]	see footnote	
1,1,1 Trichloro-ethane (TCA)	~~601~~	~~0.5 ug/l~~	200 ug/l
	~~624~~	~~2 ug/l~~	
	8260C[2]	see footnote	
1,1,2 Trichloro-ethane (TCA)	~~601~~	~~0.5 ug/l~~	5.0 ug/l
	~~624~~	~~2 ug/l~~	
	8260C[2]	see footnote	

CHAIN OF CUSTODY ATTACHMENT - EPA NPDES RGP REQUIREMENTS
PART 2 of 2 (ACCUTEST)

PARAMETER	Minimum Levels and Test Methods		Discharge Effluent Limit
	METHOD	ML[1]	
Trichloroethylene (TCE)	~~601~~	~~0.5 ug/l~~	5.0 ug/l
	~~624~~	~~2 ug/l~~	
	8260C[2]	see footnote	
Vinyl Chloride (chloroethene)	~~601~~	~~0.5 ug/l~~	2.0 ug/l
	~~624~~	~~2 ug/l~~	
	8260C[2]	see footnote	
Acetone	~~524.2~~	~~1.0 ug/l~~	Monitor Only
	~~1624~~	~~50 ug/l~~	
	8260C[2]	see footnote	
1,4 Dioxane	~~1624~~	~~50 ug/l~~	Monitor Only
	8260C[2]	see footnote	
PHENOL COMPOUNDS			
Total Phenols	~~624~~	~~1.0 ug/l~~	300 ug/l
	~~8260[2]~~	~~see footnote~~	
	~~625~~	~~1.0 ug/l~~	
	~~1625~~	~~1.0 ug/l~~	
	~~8260C[2]~~	~~see footnote~~	
	8270D[3]	see footnote	
BASE NEUTRAL ACID EXTRACTABLES COMPOUNDS			
Pentachlorophenol (PCP)	~~604 (GCFID)~~	~~1.0 ug/l~~	1.0 ug/l
	~~625~~	~~5 ug/l~~	
	~~1625~~	~~5 ug/l~~	
	8270D[3] (SIM, ML=1.0)	see footnote	
Total Phthalates[9] (Phthalate esthers)	~~625~~	~~5 ug/l~~	3.0 ug/l
	8270D[3] (SIM, ML<=3.0)	see footnote	
Bis (2-Ethylhexyl) Phthalate	~~606~~	~~10 ug/l~~	6.0 ug/l
	~~625~~	~~5 ug/l~~	
	8270D[3]	see footnote	

CHAIN OF CUSTODY ATTACHMENT - EPA NPDES RGP REQUIREMENTS
PART 2 of 2 (ACCUTEST)

PARAMETER	Minimum Levels and Test Methods		Discharge Effluent Limit
	METHOD	ML[1]	
POLYNUCLEAR AROMATIC HYDROCARBON COMPOUNDS			
Total Group I Polynuclear Aromatic Hydrocarbons (PAH)	8270D[3]	see footnote	10.0 ug/l
Benzo (a) Anthracene	~~610 GC~~	~~10 ug/l~~	0.0038 ug/l (compliance limit = ML of test method used)
	~~625~~	~~5 ug/l~~	
	~~610 HPLC~~	~~0.05 ug/l~~	
	8270D[3]	see footnote	
Benzo(a)pyrene	~~625~~	~~10 ug/l~~	0.0038 ug/l (compliance limit = ML of test method used)
	~~610 HPLC~~	~~2 ug/l~~	
	8270D[3]	see footnote	
Benzo(b)fluoranthene	~~625~~	~~10 ug/l~~	0.0038 ug/l (compliance limit = ML of test method used)
	~~610 HPLC~~	~~0.1 ug/l~~	
	8270D[3]	see footnote	
Benzo(k)fluoranthene	~~625~~	~~10 ug/l~~	0.0038 ug/l (compliance limit = ML of test method used)
	~~610 HPLC~~	~~2 ug/l~~	
	8270D[3]	see footnote	
Chrysene	~~625~~	~~10 ug/l~~	0.0038 ug/l (compliance limit = ML of test method used)
	~~610 HPLC~~	~~5 ug/l~~	
	8270D[3]	see footnote	
Dibenzo(a,h)anthracene	~~625~~	~~10 ug/l~~	0.0038 ug/l (compliance limit = ML of test method used)
	~~610 HPLC~~	~~0.1 ug/l~~	
	8270D[3]	see footnote	
Indeno(1,2,3-cd)pyrene	~~625~~	~~10 ug/l~~	0.0038 ug/l (compliance limit = ML of test method used)
	~~610 HPLC~~	~~0.15 ug/l~~	
	8270D[3]	see footnote	

CHAIN OF CUSTODY ATTACHMENT - EPA NPDES RGP REQUIREMENTS
PART 2 of 2 (ACCUTEST)

PARAMETER	Minimum Levels and Test Methods METHOD	ML[1]	Discharge Effluent Limit
Total Group II Polynuclear Aromatic Hydrocarbons	8270D[3]	see footnote	100 ug/l
Acenaphthene	~~610 GC/FID~~	~~1 ug/l~~	Limited as Total Group II PAHs
	~~625~~	~~1 ug/l~~	
	~~610 HPLC~~	~~0.5 ug/l~~	
	8270D[3]	see footnote	
Acenaphthylene	~~625~~	~~10 ug/l~~	Limited as Total Group II PAHs
	~~610 HPLC~~	~~0.2 ug/l~~	
	8270D[3]	see footnote	
Anthracene	~~625~~	~~10 ug/l~~	Limited as Total Group II PAHs
	~~610 HPLC~~	~~2 ug/l~~	
	8270D[3]	see footnote	
Benzo(g,h,i)perylene	~~625~~	~~5 ug/l~~	Limited as Total Group II PAHs
	~~610 HPLC~~	~~0.1 ug/l~~	
	8270D[3]	see footnote	
Fluoranthene	~~610 GC/FID~~	~~10 ug/l~~	Limited as Total Group II PAHs
	~~625~~	~~1 ug/l~~	
	~~610 HPLC~~	~~0.5 ug/l~~	
	8270D[3]	see footnote	
Fluorene	~~625~~	~~10 ug/l~~	Limited as Total Group II PAHs
	~~610 HPLC~~	~~0.1 ug/l~~	
	8270D[3]	see footnote	
Phenanthrene	~~625~~	~~5 ug/l~~	Limited as Total Group II PAHs
	~~610 HPLC~~	~~0.05 ug/l~~	
	8270D[3]	see footnote	
Pyrene	~~625~~	~~10 ug/l~~	Limited as Total Group II PAHs
	~~610 HPLC~~	~~0.05 ug/l~~	
	8270D[3]	see footnote	
INORGANIC PARAMETERS			
Total Arsenic (As)	ICP	5 ug/l	MA & NH = FW = 10 ug/l, MA & NH = SW = 36 ug/l
	~~Furnace AA~~	~~2 ug/l~~	

CHAIN OF CUSTODY ATTACHMENT - EPA NPDES RGP REQUIREMENTS
PART 2 of 2 (ACCUTEST)

	Minimum Levels and Test Methods		
PARAMETER	METHOD	ML[2]	Discharge Effluent Limit

LEGEND:
RGP = Remediation General Permit
Flame AA = Flame Atomic Absorption
ICP = Inductively Coupled Plasma
Furnace AA = Furnace Atomic Absorption
FW = Freshwater
SW = Saltwater
MA = State of Massachusetts
NH = State of New Hampshire

FOOTNOTES:

1. Minimum Level (ML) is the lowest level at which the analytical system gives a recognizable signal and acceptable calibration point for the analyte. The ML represents the lowest concentration at which an analyte can be measured with a known level of confidence. The ML is calculated by multiplying the laboratory-determined method detection limit by 3.18 (see 40 CFR Part 136, Appendix B) Where a minimum level (ML) is listed but a test method is not specified, permittee may use any of the available methods approved for use under 40 CFR 136, including alternatives approved by this permit, that meets ML. See EPA's "Methods and Guidance for the Analysis of Water" at www.epa.gov/water/owrccatalog.nsf. Where a test method is specified but ML is not listed for that Method, the lowest ML for listed methods must be used before concentration can be considered as "non-detect".
2. For measuring volatile organic compounds, Method 8260C (or the latest version) may be used as a substitute for CWA Methods 524.2, 602, 624, or 1624. Method 8260C must be preceded by Method 5030 as the preparation method. However, any method changes must be accompanied by documented quality assurance quality control (QA/QC) test to prove that the analytical process can achieve the lower detection limits of Method 8260C. For TBA and TAME the EPA advises no acid as a preservative.
3. For measuring semi-volatile organic compounds, Method 8270D may be used as a substitute for Methods 610, 625, or 1625. Method 8270D must be preceded by Method 3520C as the sample preparation method. In either case, the quality control requirements of Method 3500B must be taken into account. The sample preparation method must be specified with data analysis records. Method 8270D may be modified to provide lower detection and quantitation limits using Selected Ion Monitoring (SIM). Any method changes must be accompanied by documented quality assurance quality control (QA/QC) test results to prove that the analytical process can achieve the lower detection limits of Method 8270D.
4. GC - gas chromatography.
5. GCMS -gas chromatography/ mass spectrometry
6. LC-high pressure liquid chromatography.
7. Flame Atomic Absorption.
8. For measuring fuel oxygenates, Method 602 must be modified to include a heated purge.
9. The sum of individual phthalate compounds.
10. In the November 2002 WQC, EPA has revised the definition of total PCBs for aquatic life as "total PCBs is the sum of all homologue, all isomer, all congener, or all Aroclor analyses.
11. Method 1668a (HRGC/HRMS) has been proposed by EPA and is currently being validated. When approval of the method is finalized, it will be approved for use with this general permit
12. Methods 6010b and 200.7 for metals may only be used when sample prepared with SW-846 digestion method, Method 3010.
13. Any value below the ML shall be reported as zero.
14. Analysis of the influent samples shall use the test methods with the MLs at or below limits where practicable.

GC/MS Semi-volatiles

QC Data Summaries

Includes the following where applicable:

- Method Blank Summaries
- Blank Spike Summaries
- Matrix Spike and Duplicate Summaries
- Surrogate Recovery Summaries

Method Blank Summary

Job Number: M51582
Account: SHELLWIC Shell Oil
Project: ENVTRAC:98997768 846 Concord St., Framingham, MA

Sample	File ID	DF	Analyzed	By	Prep Date	Prep Batch	Analytical Batch
OP9821-MB	E24737.D	1	10/14/05	PN	10/12/05	OP9821	MSE1293

The QC reported here applies to the following samples: Method: SW846 8270C

M51582-1

CAS No.	Compound	Result	RL	Units	Q
95-57-8	2-Chlorophenol	ND	5.0	ug/l	
59-50-7	4-Chloro-3-methyl phenol	ND	10	ug/l	
120-83-2	2,4-Dichlorophenol	ND	10	ug/l	
105-67-9	2,4-Dimethylphenol	ND	10	ug/l	
51-28-5	2,4-Dinitrophenol	ND	20	ug/l	
534-52-1	4,6-Dinitro-o-cresol	ND	10	ug/l	
88-75-5	2-Nitrophenol	ND	10	ug/l	
100-02-7	4-Nitrophenol	ND	20	ug/l	
108-95-2	Phenol	ND	5.0	ug/l	
88-06-2	2,4,6-Trichlorophenol	ND	10	ug/l	
85-68-7	Butyl benzyl phthalate	ND	10	ug/l	
84-74-2	Di-n-butyl phthalate	ND	10	ug/l	
117-84-0	Di-n-octyl phthalate	ND	10	ug/l	
84-66-2	Diethyl phthalate	ND	10	ug/l	
131-11-3	Dimethyl phthalate	ND	10	ug/l	
117-81-7	bis(2-Ethylhexyl)phthalate	ND	10	ug/l	

CAS No.	Surrogate Recoveries		Limits
367-12-4	2-Fluorophenol	40%	10-120%
4165-62-2	Phenol-d5	27%	10-120%
118-79-6	2,4,6-Tribromophenol	61%	31-123%
4165-60-0	Nitrobenzene-d5	62%	32-120%
321-60-8	2-Fluorobiphenyl	56%	32-120%
1718-51-0	Terphenyl-d14	62%	33-123%

Method Blank Summary

Job Number: M51582
Account: SHELLWIC Shell Oil
Project: ENVTRAC:98997768 846 Concord St., Framingham, MA

Sample	File ID	DF	Analyzed	By	Prep Date	Prep Batch	Analytical Batch
OP9822-MB	F16333.D	1	10/14/05	PN	10/12/05	OP9822	MSF889

The QC reported here applies to the following samples: Method: SW846 8270C BY SIM

M51582-1A

CAS No.	Compound	Result	RL	Units	Q
87-86-5	Pentachlorophenol	ND	1.0	ug/l	
95-95-4	2,4,5-Trichlorophenol	ND	1.0	ug/l	
83-32-9	Acenaphthene	ND	0.10	ug/l	
208-96-8	Acenaphthylene	ND	0.10	ug/l	
120-12-7	Anthracene	ND	0.10	ug/l	
56-55-3	Benzo(a)anthracene	ND	0.050	ug/l	
50-32-8	Benzo(a)pyrene	ND	0.10	ug/l	
205-99-2	Benzo(b)fluoranthene	ND	0.050	ug/l	
191-24-2	Benzo(g,h,i)perylene	ND	0.10	ug/l	
207-08-9	Benzo(k)fluoranthene	ND	0.10	ug/l	
218-01-9	Chrysene	ND	0.10	ug/l	
53-70-3	Dibenzo(a,h)anthracene	ND	0.10	ug/l	
206-44-0	Fluoranthene	ND	0.10	ug/l	
86-73-7	Fluorene	ND	0.10	ug/l	
193-39-5	Indeno(1,2,3-cd)pyrene	ND	0.10	ug/l	
91-57-6	2-Methylnaphthalene	ND	0.20	ug/l	
91-20-3	Naphthalene	ND	0.10	ug/l	
85-01-8	Phenanthrene	ND	0.10	ug/l	
129-00-0	Pyrene	ND	0.10	ug/l	

CAS No.	Surrogate Recoveries		Limits
367-12-4	2-Fluorophenol	51%	10-120%
4165-62-2	Phenol-d5	35%	10-120%
118-79-6	2,4,6-Tribromophenol	92%	23-135%
4165-60-0	Nitrobenzene-d5	63%	30-120%
321-60-8	2-Fluorobiphenyl	78%	25-120%
1718-51-0	Terphenyl-d14	91%	24-132%

Blank Spike Summary

Job Number: M51582
Account: SHELLWIC Shell Oil
Project: ENVTRAC:98997768 846 Concord St., Framingham, MA

Sample	File ID	DF	Analyzed	By	Prep Date	Prep Batch	Analytical Batch
OP9821-BS	E24738.D	1	10/14/05	PN	10/12/05	OP9821	MSE1293

The QC reported here applies to the following samples: Method: SW846 8270C

M51582-1

CAS No.	Compound	Spike ug/l	BSP ug/l	BSP %	Limits
95-57-8	2-Chlorophenol	100	59.5	60	50-120
59-50-7	4-Chloro-3-methyl phenol	100	60.3	60	56-120
120-83-2	2,4-Dichlorophenol	100	63.5	64	56-120
105-67-9	2,4-Dimethylphenol	100	56.0	56	37-120
51-28-5	2,4-Dinitrophenol	100	70.2	70	27-120
534-52-1	4,6-Dinitro-o-cresol	100	71.1	71	36-125
88-75-5	2-Nitrophenol	100	57.9	58	54-120
100-02-7	4-Nitrophenol	100	40.5	41	7-120
108-95-2	Phenol	100	28.7	29	17-120
88-06-2	2,4,6-Trichlorophenol	100	66.7	67	53-120
85-68-7	Butyl benzyl phthalate	50	30.2	60	27-120
84-74-2	Di-n-butyl phthalate	50	31.9	64	47-120
117-84-0	Di-n-octyl phthalate	50	31.2	62	60-123
84-66-2	Diethyl phthalate	50	29.3	59	8-120
131-11-3	Dimethyl phthalate	50	19.8	40	1-120
117-81-7	bis(2-Ethylhexyl)phthalate	50	32.8	66	61-120

CAS No.	Surrogate Recoveries	BSP	Limits
367-12-4	2-Fluorophenol	44%	10-120%
4165-62-2	Phenol-d5	29%	10-120%
118-79-6	2,4,6-Tribromophenol	63%	31-123%
4165-60-0	Nitrobenzene-d5	58%	32-120%
321-60-8	2-Fluorobiphenyl	62%	32-120%
1718-51-0	Terphenyl-d14	65%	33-123%

Blank Spike/Blank Spike Duplicate Summary

Job Number: M51582
Account: SHELLWIC Shell Oil
Project: ENVTRAC:98997768 846 Concord St., Framingham, MA

Sample	File ID	DF	Analyzed	By	Prep Date	Prep Batch	Analytical Batch
OP9822-BS	F16334.D	1	10/14/05	PN	10/12/05	OP9822	MSF889
OP9822-BSD	F16335.D	1	10/14/05	PN	10/12/05	OP9822	MSF889

The QC reported here applies to the following samples: Method: SW846 8270C BY SIM

M51582-1A

CAS No.	Compound	Spike ug/l	BSP ug/l	BSP %	BSD ug/l	BSD %	RPD	Limits Rec/RPD
87-86-5	Pentachlorophenol	100	85.8	86	88.5	89	3	53-111/30
95-95-4	2,4,5-Trichlorophenol	100	86.9	87	91.7	92	5	53-120/30
83-32-9	Acenaphthene	50	39.8	80	40.9	82	3	47-120/30
208-96-8	Acenaphthylene	50	32.5	65	33.4	67	3	49-120/30
120-12-7	Anthracene	50	45.5	91	45.8	92	1	55-120/30
56-55-3	Benzo(a)anthracene	50	44.6	89	45.9	92	3	50-129/30
50-32-8	Benzo(a)pyrene	50	40.9	82	41.9	84	2	57-120/30
205-99-2	Benzo(b)fluoranthene	50	39.0	78	39.7	79	2	62-120/30
191-24-2	Benzo(g,h,i)perylene	50	45.0	90	45.4	91	1	57-127/30
207-08-9	Benzo(k)fluoranthene	50	39.5	79	41.5	83	5	51-120/30
218-01-9	Chrysene	50	47.7	95	48.8	98	2	54-120/30
53-70-3	Dibenzo(a,h)anthracene	50	50.2	100	51.0	102	2	45-144/30
206-44-0	Fluoranthene	50	41.2	82	42.4	85	3	51-121/30
86-73-7	Fluorene	50	38.1	76	39.6	79	4	56-120/30
193-39-5	Indeno(1,2,3-cd)pyrene	50	45.2	90	45.9	92	2	54-121/30
91-57-6	2-Methylnaphthalene	50	37.9	76	37.7	75	1	40-120/30
91-20-3	Naphthalene	50	34.6	69	34.9	70	1	37-120/30
85-01-8	Phenanthrene	50	41.7	83	43.1	86	3	51-120/30
129-00-0	Pyrene	50	44.2	88	45.9	92	4	45-120/30

CAS No.	Surrogate Recoveries	BSP	BSD	Limits
367-12-4	2-Fluorophenol	55%	57%	10-120%
4165-62-2	Phenol-d5	39%	41%	10-120%
118-79-6	2,4,6-Tribromophenol	110%	110%	23-135%
4165-60-0	Nitrobenzene-d5	65%	68%	30-120%
321-60-8	2-Fluorobiphenyl	76%	80%	25-120%
1718-51-0	Terphenyl-d14	87%	91%	24-132%

Matrix Spike/Matrix Spike Duplicate Summary

Job Number: M51582
Account: SHELLWIC Shell Oil
Project: ENVTRAC:98997768 846 Concord St., Framingham, MA

Sample	File ID	DF	Analyzed	By	Prep Date	Prep Batch	Analytical Batch
OP9821-MS	E24742.D	1	10/14/05	PN	10/12/05	OP9821	MSE1293
OP9821-MSD	E24743.D	1	10/14/05	PN	10/12/05	OP9821	MSE1293
M51643-1	E24744.D	1	10/14/05	PN	10/12/05	OP9821	MSE1293

The QC reported here applies to the following samples: Method: SW846 8270C

M51582-1

CAS No.	Compound	M51643-1 ug/l	Q	Spike ug/l	MS ug/l	MS %	MSD ug/l	MSD %	RPD	Limits Rec/RPD
95-57-8	2-Chlorophenol	ND		100	64.7	65	63.1	63	3	43-120/24
59-50-7	4-Chloro-3-methyl phenol	ND		100	64.9	65	60.6	61	7	52-120/20
120-83-2	2,4-Dichlorophenol	ND		100	60.3	60	63.2	63	5	49-120/23
105-67-9	2,4-Dimethylphenol	ND		100	49.6	50	44.7	45	10	1-120/33
51-28-5	2,4-Dinitrophenol	ND		100	73.8	74	71.6	72	3	29-124/50
534-52-1	4,6-Dinitro-o-cresol	ND		100	70.1	70	72.7	73	4	41-126/37
88-75-5	2-Nitrophenol	ND		100	70.0	70	63.6	64	10	48-120/31
100-02-7	4-Nitrophenol	ND		100	41.8	42	41.7	42	0	7-120/22
108-95-2	Phenol	ND		100	33.5	34	36.0	36	7	13-120/25
88-06-2	2,4,6-Trichlorophenol	ND		100	64.2	64	67.3	67	5	44-120/26
85-68-7	Butyl benzyl phthalate	ND		50	31.1	62	30.5	61	2	28-120/29
84-74-2	Di-n-butyl phthalate	ND		50	34.0	68	32.1	64	6	46-120/25
117-84-0	Di-n-octyl phthalate	ND		50	35.1	70	33.6	67	4	57-124/26
84-66-2	Diethyl phthalate	ND		50	30.5	61	27.7	55	10	12-120/39
131-11-3	Dimethyl phthalate	ND		50	19.5	39	17.6	35	10	1-120/50
117-81-7	bis(2-Ethylhexyl)phthalate	ND		50	35.5	71	34.4	69	3	53-125/25

CAS No.	Surrogate Recoveries	MS	MSD	M51643-1	Limits
367-12-4	2-Fluorophenol	47%	47%	38%	10-120%
4165-62-2	Phenol-d5	31%	32%	19%	10-120%
118-79-6	2,4,6-Tribromophenol	64%	66%	54%	31-123%
4165-60-0	Nitrobenzene-d5	65%	65%	56%	32-120%
321-60-8	2-Fluorobiphenyl	67%	61%	55%	32-120%
1718-51-0	Terphenyl-d14	66%	67%	57%	33-123%

Matrix Spike/Matrix Spike Duplicate Summary

Job Number: M51582
Account: SHELLWIC Shell Oil
Project: ENVTRAC:98997768 846 Concord St., Framingham, MA

Sample	File ID	DF	Analyzed	By	Prep Date	Prep Batch	Analytical Batch
OP9822-MS	F16336.D	1	10/14/05	PN	10/12/05	OP9822	MSF889
OP9822-MSD	F16337.D	1	10/14/05	PN	10/12/05	OP9822	MSF889
M51686-1	F16338.D	1	10/14/05	PN	10/12/05	OP9822	MSF889

The QC reported here applies to the following samples: Method: SW846 8270C BY SIM

M51582-1A

CAS No.	Compound	M51686-1 ug/l	Q	Spike ug/l	MS ug/l	MS %	MSD ug/l	MSD %	RPD	Limits Rec/RPD
87-86-5	Pentachlorophenol	ND		100	76.2	76	84.4	84	10	5-137/52
95-95-4	2,4,5-Trichlorophenol	ND		100	90.1	90	99.2	99	10	40-120/26
83-32-9	Acenaphthene	ND		50	41.5	83	41.9	84	1	49-120/20
208-96-8	Acenaphthylene	ND		50	33.4	67	34.2	68	2	50-120/22
120-12-7	Anthracene	ND		50	43.5	87	45.4	91	4	58-120/20
56-55-3	Benzo(a)anthracene	ND		50	45.0	90	46.5	93	3	50-132/20
50-32-8	Benzo(a)pyrene	ND		50	40.5	81	42.3	85	4	51-120/22
205-99-2	Benzo(b)fluoranthene	ND		50	37.8	76	40.0	80	6	67-120/20
191-24-2	Benzo(g,h,i)perylene	ND		50	43.9	88	44.9	90	2	63-121/20
207-08-9	Benzo(k)fluoranthene	ND		50	40.6	81	42.2	84	4	54-120/25
218-01-9	Chrysene	ND		50	47.7	95	49.7	99	4	59-120/20
53-70-3	Dibenzo(a,h)anthracene	ND		50	50.9	102	52.8	106	4	46-146/20
206-44-0	Fluoranthene	ND		50	41.4	83	43.6	87	5	58-120/20
86-73-7	Fluorene	ND		50	39.2	78	40.8	82	4	62-120/20
193-39-5	Indeno(1,2,3-cd)pyrene	ND		50	44.2	88	45.5	91	3	52-124/20
91-57-6	2-Methylnaphthalene	ND		50	39.6	79	37.6	75	5	44-120/20
91-20-3	Naphthalene	ND		50	36.4	73	34.6	69	5	41-120/20
85-01-8	Phenanthrene	ND		50	41.7	83	43.0	86	3	51-120/21
129-00-0	Pyrene	ND		50	45.3	91	46.2	92	2	48-121/20

CAS No.	Surrogate Recoveries	MS	MSD	M51686-1	Limits
367-12-4	2-Fluorophenol	57%	61%	52%	10-120%
4165-62-2	Phenol-d5	41%	44%	27%	10-120%
118-79-6	2,4,6-Tribromophenol	95%	113%	86%	23-135%
4165-60-0	Nitrobenzene-d5	70%	72%	64%	30-120%
321-60-8	2-Fluorobiphenyl	83%	84%	89%	25-120%
1718-51-0	Terphenyl-d14	89%	93%	91%	24-132%

Semivolatile Surrogate Recovery Summary

Job Number: M51582
Account: SHELLWIC Shell Oil
Project: ENVTRAC:98997768 846 Concord St., Framingham, MA

Method: SW846 8270C Matrix: AQ

Samples and QC shown here apply to the above method

Lab Sample ID	Lab File ID	S1	S2	S3	S4	S5	S6
M51582-1	E24883.D	25.0	25.0	37.0	69.0	64.0	59.0
OP9821-BS	E24738.D	44.0	29.0	63.0	58.0	62.0	65.0
OP9821-MB	E24737.D	40.0	27.0	61.0	62.0	56.0	62.0
OP9821-MS	E24742.D	47.0	31.0	64.0	65.0	67.0	66.0
OP9821-MSD	E24743.D	47.0	32.0	66.0	65.0	61.0	67.0

Surrogate Compounds	Recovery Limits
S1 = 2-Fluorophenol	10-120%
S2 = Phenol-d5	10-120%
S3 = 2,4,6-Tribromophenol	31-123%
S4 = Nitrobenzene-d5	32-120%
S5 = 2-Fluorobiphenyl	32-120%
S6 = Terphenyl-d14	33-123%

Semivolatile Surrogate Recovery Summary

Job Number: M51582
Account: SHELLWIC Shell Oil
Project: ENVTRAC:98997768 846 Concord St., Framingham, MA

Method: SW846 8270C BY SIM Matrix: AQ

Samples and QC shown here apply to the above method

Lab Sample ID	Lab File ID	S1	S2	S3	S4	S5	S6
M51582-1A	F16455.D	32.0	32.0	52.0	68.0	82.0	75.0
OP9822-BS	F16334.D	55.0	39.0	110.0	65.0	76.0	87.0
OP9822-BSD	F16335.D	57.0	41.0	110.0	68.0	80.0	91.0
OP9822-MB	F16333.D	51.0	35.0	92.0	63.0	78.0	91.0
OP9822-MS	F16336.D	57.0	41.0	95.0	70.0	83.0	89.0
OP9822-MSD	F16337.D	61.0	44.0	113.0	72.0	84.0	93.0

Surrogate Compounds	Recovery Limits
S1 = 2-Fluorophenol	10-120%
S2 = Phenol-d5	10-120%
S3 = 2,4,6-Tribromophenol	23-135%
S4 = Nitrobenzene-d5	30-120%
S5 = 2-Fluorobiphenyl	25-120%
S6 = Terphenyl-d14	24-132%

Metals Analysis

QC Data Summaries

Includes the following where applicable:

- Method Blank Summaries
- Matrix Spike and Duplicate Summaries
- Blank Spike and Lab Control Sample Summaries
- Serial Dilution Summaries

BLANK RESULTS SUMMARY
Part 2 - Method Blanks

Login Number: M51582
Account: SHELLWIC - Shell Oil
Project: ENVTRAC:98997768 846 Concord St., Framingham, MA

QC Batch ID: MP7753
Matrix Type: AQUEOUS

Methods: SW846 6010B
Units: ug/l

Prep Date: 10/12/05

Metal	RL	IDL	MB raw	final
Aluminum	200	14		
Antimony	6.0	1.6		
Arsenic	5.0	2.3	0.51	<5.0
Barium	200	1.7		
Beryllium	4.0	.18		
Boron	100	1.2		
Cadmium	4.0	.31		
Calcium	5000	4.7		
Chromium	10	.53		
Cobalt	50	.47		
Copper	25	2.8		
Iron	100	14		
Lead	5.0	1.9	anr	
Magnesium	5000	5.3		
Manganese	15	.17		
Molybdenum	100	.92		
Nickel	40	.65		
Potassium	5000	31		
Selenium	10	2.7		
Silver	5.0	.53		
Sodium	5000	110		
Strontium	10	.22		
Thallium	10	2.9		
Tin	100	9.4		
Titanium	50	1.3		
Vanadium	50	2.4		
Zinc	20	1.2		

Associated samples MP7753: M51582-1

Results < IDL are shown as zero for calculation purposes
(*) Outside of QC limits
(anr) Analyte not requested

MATRIX SPIKE AND DUPLICATE RESULTS SUMMARY

Login Number: M51582
Account: SHELLWIC - Shell Oil
Project: ENVTRAC:98997768 846 Concord St., Framingham, MA

QC Batch ID: MP7753
Matrix Type: AQUEOUS

Methods: SW846 6010B
Units: ug/l

Metal	M51508-6 Original	MS	Spikelot MPIRWS2	% Rec	QC Limits	M51508-6 Original	DUP	RPD	QC Limits
Prep Date:				10/12/05				10/12/05	
Aluminum									
Antimony									
Arsenic	0.0	520	500	104.0	75-125	0.0	2.3	200.0(a)	0-20
Barium									
Beryllium									
Boron									
Cadmium									
Calcium									
Chromium									
Cobalt									
Copper									
Iron									
Lead	anr								
Magnesium									
Manganese									
Molybdenum									
Nickel									
Potassium									
Selenium									
Silver									
Sodium									
Strontium									
Thallium									
Tin									
Titanium									
Vanadium									
Zinc									

Associated samples MP7753: M51582-1

Results < IDL are shown as zero for calculation purposes
(*) Outside of QC limits
(N) Matrix Spike Rec. outside of QC limits
(anr) Analyte not requested
(a) RPD acceptable due to low duplicate and sample concentrations.

SPIKE BLANK AND LAB CONTROL SAMPLE SUMMARY

Login Number: M51582
Account: SHELLWIC - Shell Oil
Project: ENVTRAC:98997768 846 Concord St., Framingham, MA

QC Batch ID: MP7753
Matrix Type: AQUEOUS

Methods: SW846 6010B
Units: ug/l

Prep Date: 10/12/05

Metal	BSP Result	Spikelot MPIRWS2	% Rec	QC Limits
Aluminum				
Antimony				
Arsenic	510	500	102.0	80-120
Barium				
Beryllium				
Boron				
Cadmium				
Calcium				
Chromium				
Cobalt				
Copper				
Iron				
Lead	anr			
Magnesium				
Manganese				
Molybdenum				
Nickel				
Potassium				
Selenium				
Silver				
Sodium				
Strontium				
Thallium				
Tin				
Titanium				
Vanadium				
Zinc				

Associated samples MP7753: M51582-1

Results < IDL are shown as zero for calculation purposes
(*) Outside of QC limits
(anr) Analyte not requested

SERIAL DILUTION RESULTS SUMMARY

Login Number: M51582
Account: SHELLWIC - Shell Oil
Project: ENVTRAC:98997768 846 Concord St., Framingham, MA

QC Batch ID: MP7753
Matrix Type: AQUEOUS

Methods: SW846 6010B
Units: ug/l

Prep Date: 10/12/05

Metal	M51508-6 Original	SDL 1:1	RPD	QC Limits
Aluminum				
Antimony				
Arsenic	0.00	0.00	NC	0-10
Barium				
Beryllium				
Boron				
Cadmium				
Calcium				
Chromium				
Cobalt				
Copper				
Iron				
Lead	anr			
Magnesium				
Manganese				
Molybdenum				
Nickel				
Potassium				
Selenium				
Silver				
Sodium				
Strontium				
Thallium				
Tin				
Titanium				
Vanadium				
Zinc				

Associated samples MP7753: M51582-1

Results < IDL are shown as zero for calculation purposes
(*) Outside of QC limits
(anr) Analyte not requested

General Chemistry

QC Data Summaries

Includes the following where applicable:

- Method Blank and Blank Spike Summaries
- Duplicate Summaries
- Matrix Spike Summaries

METHOD BLANK AND SPIKE RESULTS SUMMARY
GENERAL CHEMISTRY

Login Number: M51582
Account: SHELLWIC - Shell Oil
Project: ENVTRAC:98997768 846 Concord St., Framingham, MA

Analyte	Batch ID	RL	MB Result	Units	Spike Amount	BSP Result	BSP %Recov	QC Limits
Cyanide	GP6054/GN18097	0.010	<0.010	mg/l	0.1	0.102	102.0	90-110%
Cyanide	GP6054/GN18097			mg/l	0.2	0.208	104.0	90-110%

Associated Samples:
Batch GP6054: M51582-1

6.1

6

DUPLICATE RESULTS SUMMARY
GENERAL CHEMISTRY

Login Number: M51582
Account: SHELLWIC - Shell Oil
Project: ENVTRAC:98997768 846 Concord St., Framingham, MA

Analyte	Batch ID	QC Sample	Units	Original Result	DUP Result	RPD	QC Limits
Cyanide	GP6054/GN18097	M51477-3	mg/l	<0.010	<0.010	0.0	0-20%

Associated Samples:
Batch GP6054: M51582-1

6.2

6

MATRIX SPIKE RESULTS SUMMARY
GENERAL CHEMISTRY

Login Number: M51582
Account: SHELLWIC - Shell Oil
Project: ENVTRAC:98997768 846 Concord St., Framingham, MA

Analyte	Batch ID	QC Sample	Units	Original Result	Spike Amount	MS Result	%Rec	QC Limits
Cyanide	GP6054/GN18097	M51477-3	mg/l	<0.010	0.1	0.10	100.0	75-125%

Associated Samples:
Batch GP6054: M51582-1

6.3