**BETA Group, Inc.**
**Engineers • Scientists • Planners**

6 Blackstone Valley Place, Suite 101
Lincoln, RI 02865
(401) 333-2382 • fax (401) 333-9225
www.BETA-Inc.com

DC/MEB91015

October 25, 2005

US Environmental Protection Agency
RGP-NOC Processing, Municipal Assistance Unit (CMU)
1 Congress Street, Suite 1100
Boston, MA 02114-2023

**RE: Sutton Sewer Line – Utility-related Abatement Measure**
**Notice of Intent for Coverage under the Remediation General Permit**

Dear Sir or Madam:

On behalf of the Town of Sutton, BETA Group, Inc. (BETA) is submitting the attached form for the Notice of Intent (NOI) for the Remediation General Permit (RGP) required for the dewatering activities to take place during the excavation and installation of new sewer lines in the vicinity of Bek's Gasoline Service Station at 30-32 Main Street in Sutton, Massachusetts.

During recent sewer line excavation activities, BETA identified impacted soil and groundwater in the street in front of Bek's Gasoline Station. Soil and groundwater samples in the vicinity of Bek's indicate the presence of petroleum compounds and volatile organic compounds (VOCs). Response actions relating to historic releases at Bek's have been conducted by Lincoln Environmental of Smithfield, Rhode Island. A Phase V Site Monitoring Report submitted to the Massachusetts Department of Environmental Protection (MADEP) on June 21, 2005 detailed groundwater impacts in three wells exceeding MADEP's Method 1 GW-3 Standards. Bek's is currently in Class C – RAO Post Closure Monitoring.

In order to excavate and install the sewer lines, dewatering must be performed in the vicinity of Bek's Gasoline Station. Groundwater will be pumped into a 20,000 gallon fractionation tank prior to treatment. The groundwater suppression pumps will be electrically operated via an on-site gasoline-fired generator. The groundwater will then be pumped through a bag filter and two 2,000 pound granular activated carbon units prior to being discharged to the Mumford River approximately 600 feet northwest of the work area. BETA has calculated an average design flow of 65 to 70 gallons per minute (gpm) and has designed a treatment system capable of handling up to 100 gpm. For operation of the system, a Best Management Practices Plan (BMPP) will be implemented that includes an on-site operator overseeing the system operations 24 hours a day during pumping. The operator will be responsible for daily maintenance of the system to minimize the potential for violations and to protect the designated water uses of the Mumford River.

The excavation and dewatering activities are expected to take place from November 7 to November 11, 2005. BETA will follow the EPA protocol for collecting samples of the untreated influent and treated effluent during operation of the treatment system. Please contact the undersigned at (401) 333-2382 if you have any questions regarding this submittal or require any further information to approve this NOI.

Sincerely,
BETA Group, Inc.

Joseph R. McLoughlin II, LSP
Project Manager

Cc: Don Obuchowski, Town of Sutton
Ken Polito, J.A. Polito & Son

OCT 27

Attachments: Notice of Intent – Remediation General Permit
Laboratory Analytical Results

## B. Suggested Form for Notice of Intent (NOI) for the Remediation General Permit

**1. General site information.** Please provide the following information about the site:

| | | | | |
|---|---|---|---|---|
| a) Name of **facility/site**: Sutton Sewer Line | | **Facility/site** address: | | |
| Location of **facility/site**: longitude: 71.74 latitude: 42.09 | Facility SIC code(s): NA | Street: 30-32 Main Street | | |
| b) Name of **facility/site owner:** State of Massachusetts | | Town: Sutton | | |
| Email address of owner: NA | | State: MA | Zip: 01590 | County: Worcester |
| Telephone no.of facility/site **owner**: (508) 754-7204 | | | | |
| Fax no. of facility/site **owner**: (508) 799-9763 | | **Owner** is (check one): 1. Federal____ 2. State/Tribal ✔ 3. Private_____ 4. other, if so, describe: | | |
| Address of **owner** (if different from site): | | | | |
| Street: 403 Belmont Street | | | | |
| Town: Worcester | State: MA | Zip: 01604 | County: Worcester | |
| c) Legal name of **operator**: Town of Sutton | **Operator** telephone no: (508) 865-8743 | | | |
| | **Operator** fax no.: (508) 865-9533 | **Operator** email: NA | | |
| **Operator** contact name and title: Don Obuchowski, Sewer Superintendent | | | | |



OCT 27

| Address of **operator** (if different from owner): | Street: Pleasant Valley Road | | |
|---|---|---|---|
| Town: Sutton | State: MA | Zip: 01590 | County: Worcester |

d) Check "yes" or "no" for the following:
1. Has a prior NPDES permit exclusion been granted for the discharge? Yes___ No ✔, if "yes," number:
2. Has a prior NPDES application (Form 1 & 2C) ever been filed for the discharge? Yes___ No ✔, if "yes," date and tracking #:
3. Is the discharge a "new discharge"as defined by 40 CFR 122.2? Yes ✔ No___
4. For sites in Massachusetts, is the discharge covered under the MA Contingency Plan (MCP) and exempt from state permitting? Yes ✔ No__

e) Is site/facility subject to any State permitting or other action which is causing the generation of discharge? Yes ✔ No___
If "yes," please list:
1. site identification # assigned by the state of NH or MA: 2-15911
2. permit or license # assigned:
3. state agency contact information: name, location, and telephone number:
MADEP, Central Region, 508-79-7650

f) Is the site/facility covered by any other EPA permit, including:
1. multi-sector storm water general permit? Y___ N ✔, if Y, number:
2. phase I or II construction storm water general permit? Y___ N ✔, if Y, number:
3. individual NPDES permit? Y___ N ✔, if Y, number:
4. any other water quality related permit? Y___ N ✔, if Y, number:

**2. Discharge information.** Please provide information about the discharge, (attaching additional sheets as needed) including:

a) Describe the discharge activities for which the owner/applicant is seeking coverage:
Excavation of soil and dewatering of groundwater table in order to install sewer lines.

| b) Provide the following information about each discharge: | 1) Number of discharge points: 1 | 2) What is the **maximum** and **average flow rate** of discharge (in cubic feet per second, $ft^3/s$)? Max. flow 0.22<br>Average flow 0.15 Is maximum flow a **design value**? Y ✔ N___<br>For average flow, include the units and appropriate notation if this value is a design value or estimate if not available. |
|---|---|---|

3) Latitude and longitude of each discharge within 100 feet: pt.1:long. 71.74 lat. 42.09 ; pt.2: long._____ lat._____; pt.3: long._____ lat._____; pt.4:long._____ lat._____; pt.5: long._____ lat._____; pt.6:long._____ lat._____; pt.7: long._____ lat._____; pt.8:long._____ lat._____; etc.

| | |
|---|---|
| 4) If hydrostatic testing, total volume of the discharge (gals): | 5) Is the discharge intermittent_____ or seasonal_____?<br>Is discharge ongoing Yes ✔ No_____? |
| c) Expected dates of discharge (mm/dd/yy): start 11/07/05 end 11/11/05 | |
| d) Please attach a line drawing or flow schematic showing water flow through the facility including:<br>1. sources of intake water, 2. contributing flow from the operation, 3. treatment units, and 4. discharge points and receiving waters(s). | |

3. Contaminant information. In order to complete this section, the applicant will need to take a minimum of one sample of the untreated water and have it analyzed for **all** of the parameters listed in Appendix III. Historical data, (i.e., data taken no more than 2 years prior to the effective date of the permit) may be used if obtained pursuant to: i. Massachusetts' regulations 310 CMR 40.0000, the Massachusetts Contingency Plan ("Chapter 21E"); ii. New Hampshire's Title 50 RSA 485-A: Water Pollution and Waste Disposal or Title 50 RSA 485-C: Groundwater Protection Act; or iii. an EPA permit exclusion letter issued pursuant to 40 CFR 122.3, provided the data was analyzed with test methods that meet the requirements of this permit. Otherwise, a new sample shall be taken and analyzed.

a) Based on the analysis of the sample(s) of the untreated influent, the applicant must check the box of the sub-categories that the potential discharge falls within.

| | | | | | | |
|---|---|---|---|---|---|---|
| Gasoline Only ✔ | VOC Only | Primarily Metals | Urban Fill Sites | Contaminated Sumps | Mixed Contaminants | Aquifer Testing |
| Fuel Oils (and Other Oils) only | VOC with Other Contaminants | Petroleum with Other Contaminants | Listed Contaminated Sites | Contaminated Dredge Condensates | Hydrostatic Testing of Pipelines/Tanks | Well Development or Rehabilitation |

b) Based on the analysis of the untreated influent, the applicant must indicate whether each listed chemical is **believed present** or **believed absent** in the potential discharge. Attach additional sheets as needed.

| PARAMETER | Believe Absent | Believe Present | # of Samples (1 min-imum) | Type of Sample (e.g., grab) | Analytical Method Used (method #) | Minimum Level (ML) of Test Method | Maximum daily value | | Avg. daily value | |
|---|---|---|---|---|---|---|---|---|---|---|
| | | | | | | | concentration (ug/l) | mass (kg) | concentration (ug/l) | mass (kg) |
| **1. Total Suspended Solids** | | ✔ | 1 | Grab | 160.2 | 3.18 | | | 2000 | .85 |
| **2. Total Residual Chlorine** | ✔ | | 1 | Grab | 330.5 | | | | | |
| **3. Total Petroleum Hydrocarbons** | | ✔ | 4 | Grab | 1664A | 318 | | | 5637 | 2.40 |
| **4. Cyanide** | ✔ | | 1 | Grab | 335.2 | | | | | |
| **5. Benzene** | | ✔ | 4 | Grab | 8260 | 3.18 | | | 3.93 | 0.00167 |
| **6. Toluene** | | ✔ | 4 | Grab | 8260 | 3.18 | | | 77.5 | .0329 |
| **7. Ethylbenzene** | | ✔ | 4 | Grab | 8260 | 3.18 | | | 301 | 0.128 |
| **8. (m,p,o) Xylenes** | | ✔ | 4 | Grab | 8260 | 3.18 | | | 1423 | .605 |
| **9. Total BTEX[4]** | | ✔ | 4 | Grab | 8260 | 3.18 | | | 1805 | 0.767 |

[4] BTEX = Sum of Benzene, Toluene, Ethylbenzene, total Xylenes.

| PARAMETER | Believe Absent | Believe Present | # of Samples (1 min-imum) | Type of Sample (e.g., grab) | Analytical Method Used (method #) | Minimum Level (ML) of Test Method | Maximum daily value | | Avg. daily value | |
|---|---|---|---|---|---|---|---|---|---|---|
| | | | | | | | concentration (ug/l) | mass (kg) | concentration (ug/l) | mass (kg) |
| **10. Ethylene Dibromide (1,2- Dibromo-methane)** | ✔ | | 1 | Grab | 8260 | | | | | |
| **11. Methyl-tert-Butyl Ether (MtBE)** | | ✔ | 4 | Grab | 8260 | 3.18 | | | 25.15 | .01 |
| **12. tert-Butyl Alcohol (TBA)** | ✔ | | 1 | Grab | 8260 | | | | | |
| **13. tert-Amyl Methyl Ether (TAME)** | ✔ | | 1 | Grab | 8260 | | | | | |
| **14. Naphthalene** | ✔ | | 1 | Grab | 8260 | | | | | |
| **15. Carbon Tetra-chloride** | ✔ | | 1 | Grab | 8260 | | | | | |
| **16. 1,4 Dichlorobenzene** | ✔ | | 1 | Grab | 8260 | | | | | |
| **17. 1,2 Dichlorobenzene** | ✔ | | 1 | Grab | 8260 | | | | | |
| **18. 1,3 Dichlorobenzene** | ✔ | | 1 | Grab | 8260 | | | | | |
| **19. 1,1 Dichloroethane** | ✔ | | 1 | Grab | 8260 | | | | | |
| **20. 1,2 Dichloroethane** | ✔ | | 1 | Grab | 8260 | | | | | |
| **21. 1,1 Dichloroethylene** | ✔ | | 1 | Grab | 8260 | | | | | |
| **22. cis-1,2 Dichloro-ethylene** | ✔ | | 1 | Grab | 8260 | | | | | |
| **23. Dichloromethane (Methylene Chloride)** | ✔ | | 1 | Grab | 8260 | | | | | |
| **24. Tetrachloroethylene** | ✔ | | 1 | Grab | 8260 | | | | | |

| PARAMETER | Believe Absent | Believe Present | # of Samples (1 min-imum) | Type of Sample (e.g., grab) | Analytical Method Used (method #) | Minimum Level (ML) of Test Method | Maximum daily value | | Avg. daily Value | |
|---|---|---|---|---|---|---|---|---|---|---|
| | | | | | | | concentration (ug/l) | mass (kg) | concentration (ug/l) | mass (kg) |
| **25. 1,1,1 Trichloroethane** | ✔ | | 1 | Grab | 8260 | | | | | |
| **26. 1,1,2 Trichloroethane** | ✔ | | 1 | Grab | 8260 | | | | | |
| **27. Trichloroethylene** | ✔ | | 1 | Grab | 8260 | | | | | |
| **28. Vinyl Chloride** | ✔ | | 1 | Grab | 8260 | | | | | |
| **29. Acetone** | ✔ | | 1 | Grab | 8260 | | | | | |
| **30. 1,4 Dioxane** | ✔ | | 1 | Grab | 8260 | | | | | |
| **31. Total Phenols** | ✔ | | 1 | Grab | 8260 | | | | | |
| **32. Pentachlorophenol** | ✔ | | 1 | Grab | 8260 | | | | | |
| **33. Total Phthalates [5] (Phthalate esthers)** | | | | | | | | | | |
| **34. Bis (2-Ethylhexyl) Phthalate [Di-(ethylhexyl) Phthalate]** | | | | | | | | | | |
| **35. Total Group I Polycyclic Aromatic Hydrocarbons (PAH)** | | | | | | | | | | |
| **a. Benzo(a) Anthracene** | ✔ | | 1 | Grab | 8270 | | | | | |
| **b. Benzo(a) Pyrene** | ✔ | | 1 | Grab | 8270 | | | | | |
| **c. Benzo(b)Fluoranthene** | ✔ | | 1 | Grab | 8270 | | | | | |
| **d. Benzo(k) Fluoranthene** | ✔ | | 1 | Grab | 8270 | | | | | |
| **e. Chrysene** | ✔ | | 1 | Grab | 8270 | | | | | |

[5] The sum of individual phthalate compounds.

| PARAMETER | Believe Absent | Believe Present | # of Samples (1 min-imum) | Type of Sample (e.g., grab) | Analytical Method Used (method #) | Minimum Level (ML) of Test Method | Maximum daily value | | Average daily value | |
|---|---|---|---|---|---|---|---|---|---|---|
| | | | | | | | concentration (ug/l) | mass (kg) | concentration (ug/l) | mass (kg) |
| **f. Dibenzo(a,h) anthracene** | ✔ | | 1 | Grab | 8270 | | | | | |
| **g. Indeno(1,2,3-cd) Pyrene** | ✔ | | 1 | Grab | 8270 | | | | | |
| **36. Total Group II Polycyclic Aromatic Hydrocarbons (PAH)** | ✔ | | 1 | Grab | 8270 | | | | | |
| **h. Acenaphthene** | ✔ | | 1 | Grab | 8270 | | | | | |
| **i. Acenaphthylene** | ✔ | | 1 | Grab | 8270 | | | | | |
| **j. Anthracene** | ✔ | | 1 | Grab | 8270 | | | | | |
| **k. Benzo(ghi) Perylene** | ✔ | | 1 | Grab | 8270 | | | | | |
| **l. Fluoranthene** | ✔ | | 1 | Grab | 8270 | | | | | |
| **m. Fluorene** | ✔ | | 1 | Grab | 8270 | | | | | |
| **n. Naphthalene-** | ✔ | | 1 | Grab | 8270 | | | | | |
| **o. Phenanthrene** | ✔ | | 1 | Grab | 8270 | | | | | |
| **p. Pyrene** | ✔ | | 1 | Grab | 8270 | | | | | |
| **37. Total Polychlorinated Biphenyls (PCBs)** | ✔ | | 1 | Grab | 608 | | | | | |
| **38. Antimony** | ✔ | | 1 | Grab | 200.7 | | | | | |
| **39. Arsenic** | ✔ | | 1 | Grab | 3113B | | | | | |
| **40. Cadmium** | ✔ | | 1 | Grab | 3113B | | | | | |
| **41. Chromium III** | ✔ | | 1 | Grab | 200.7 | | | | | |
| **42. Chromium VI** | ✔ | | 1 | Grab | 7196A | | | | | |

| PARAMETER | Believe Absent | Believe Present | # of Samples (1 min-imum) | Type of Sample (e.g., grab) | Analytical Method Used (method #) | Minimum Level (ML) of Test Method | Maximum daily value | | Avg. daily value | |
|---|---|---|---|---|---|---|---|---|---|---|
| | | | | | | | concentration (ug/l) | mass (kg) | concentration (ug/l) | mass (kg) |
| **43. Copper** | ✔ | | | Grab | 200.7 | | | | | |
| **44. Lead** | ✔ | | | Grab | 200.7 | | | | | |
| **45. Mercury** | ✔ | | | Grab | 200.7 | | | | | |
| **46. Nickel** | | ✔ | | Grab | 200.7 | 0.0159 | | | 10 | .00425 |
| **47. Selenium** | ✔ | | | Grab | 200.7 | | | | | |
| **48. Silver** | ✔ | | | Grab | 200.7 | | | | | |
| **49. Zinc** | | ✔ | | Grab | 200.7 | 0.036 | | | 20 | .0085 |
| **50. Iron** | ✔ | | | Grab | 200.7 | | | | | |
| **Other (describe):** | | | | Grab | 200.7 | | | | | |

c) For discharges where **metals** are believed present, please fill out the following:

| | |
|---|---|
| *Step 1:* Do any of the metals in the influent have a **reasonable potential** to exceed the effluent limits in Appendix III (i.e., the limits set at zero to five dilutions)? Y____ N ✔ | If yes, which metals? |
| *Step 2:* For any metals which have **reasonable potential** to exceed the **Appendix III** limits, calculate the **dilution factor (DF)** using the formula in Part I.A.3.c) (step 2) of the NOI instructions or as determined by the State prior to the submission of this NOI.<br>What is the dilution factor for applicable metals?<br>Metals:_____<br>DF: _____ | Look up the limit calculated at the corresponding dilution factor in **Appendix IV.** Do any of the metals in the **influent** have the potential to exceed the corresponding **effluent** limits in Appendix IV (i.e., is the influent concentration above the limit set at the calculated dilution factor)?<br>Y____ N____ If "Yes," list which metals: |

**4. Treatment system information.** Please describe the treatment system using separate sheets as necessary, including:

a) A description of the treatment system, including a schematic of the proposed or existing treatment system:

Groundwater will be pumped into a 20,000 gallon Frac Tank and stored while waiting treatment. The groundwater will be pumped from the frac tank through one bag filter and two 2,000 pound activated carbon vessels prior to discharge.

| b) Identify each applicable treatment unit (check all that apply): | Frac. tank ✔ | Air stripper | Oil/water separator | Equalization tanks | Bag filter ✔ | GAC filter ✔ |
|---|---|---|---|---|---|---|
| | Chlorination | Dechlorination | Other (please describe): | | | |

c) Proposed **average** and **maximum flow rates** (gallons per minute) for the discharge and the **design flow rate**(s) (gallons per minute) of the treatment system:
Average flow rate of discharge 65 Maximum flow rate of treatment system 100 Design flow rate of treatment system 100

d) A description of chemical additives being used or planned to be used (attach MSDS sheets):

No chemical additives will be used during treatment

**5. Receiving surface water(s).** Please provide information about the receiving water(s), using separate sheets as necessary:

| a) Identify the discharge pathway: | Direct____ | Within facility__ | Storm drain____ | River/brook ✔ | Wetlands____ | Other (describe): |
|---|---|---|---|---|---|---|

b) Provide a narrative description of the discharge pathway, including the name(s) of the receiving waters:

After carbon treatment the effluent groundwater will be pumped and discharged into the Mumford River.

c) Attach a detailed map(s) indicating the site location and location of the outfall to the receiving water:
1. For multiple discharges, number the discharges sequentially.
2. For indirect dischargers, indicate the location of the discharge to the indirect conveyance and the discharge to surface water
The map should also include the location and distance to the nearest sanitary sewer as well as the locus of nearby sensitive receptors (based on USGS topographical mapping), such as surface waters, drinking water supplies, and wetland areas.

d) Provide the state water quality classification of the receiving water B,

e) Provide the reported or calculated seven day-ten year low flow (7Q10) of the receiving water NA cfs
Please attach any calculation sheets used to support stream flow and dilution calculations.

f) Is the receiving water a listed 303(d) water quality impaired or limited water? Yes____ No ✔ If yes, for which pollutant(s)?

Is there a TMDL? Yes____ No ✔ If yes, for which pollutant(s)?

**6. Results of Consultation with Federal Services:** Please provide the following information according to requirements of Part I.B.4 and Appendices II and VII.

a) Are any listed threatened or endangered species, or designated critical habitat, in proximity to the discharge? Yes____ No ✔
Has any consultation with the federal services been completed ? No____ or is consultation underway? Yes____ No____
What were the results of the consultation with the U.S. Fish and Wildlife Service and/or National Marine Fisheries Service (~~check~~ one):
a "no jeopardy" opinion? _____ or written concurrence____ on a finding that the discharges are not likely to adversely affect any endangered species or critical habitat?

b) Are any historic properties listed or eligible for listing on the National Register of Historic Places located on the facility or site or in proximity to the discharge?
Yes_____ No ✔ Have any state or tribal historic preservation officer been consulted in this determination (Massachusetts only)? Yes_____ No ✔

**7. Supplemental information. :**

Please provide any supplemental information. Attach any analytical data used to support the application. Attach any certification(s) required by the general permit.

**8. Signature Requirements:** The Notice of Intent must be signed by the operator in accordance with the signatory requirements of 40 CFR Section 122.22, including the following certification:

*I certify under penalty of law that this document and all attachments were prepared under my direction or supervision in accordance with a system designed to assure that qualified personnel properly gather and evaluate the information submitted. Based on my inquiry of the person or persons who manage the system, or those persons directly responsible for gathering the information, I certify that the information submitted is, to the best of my knowledge and belief, true, accurate, and complete. I certify that I am aware that there are significant penalties for submitting false information, including the possibility of fine and imprisonment for knowing violations.*

Facility/Site Name: Sutton Sewer Line

Operator signature: Patricia E. Nedoroscik

Title: Town Administrator

Date: 10/20/05

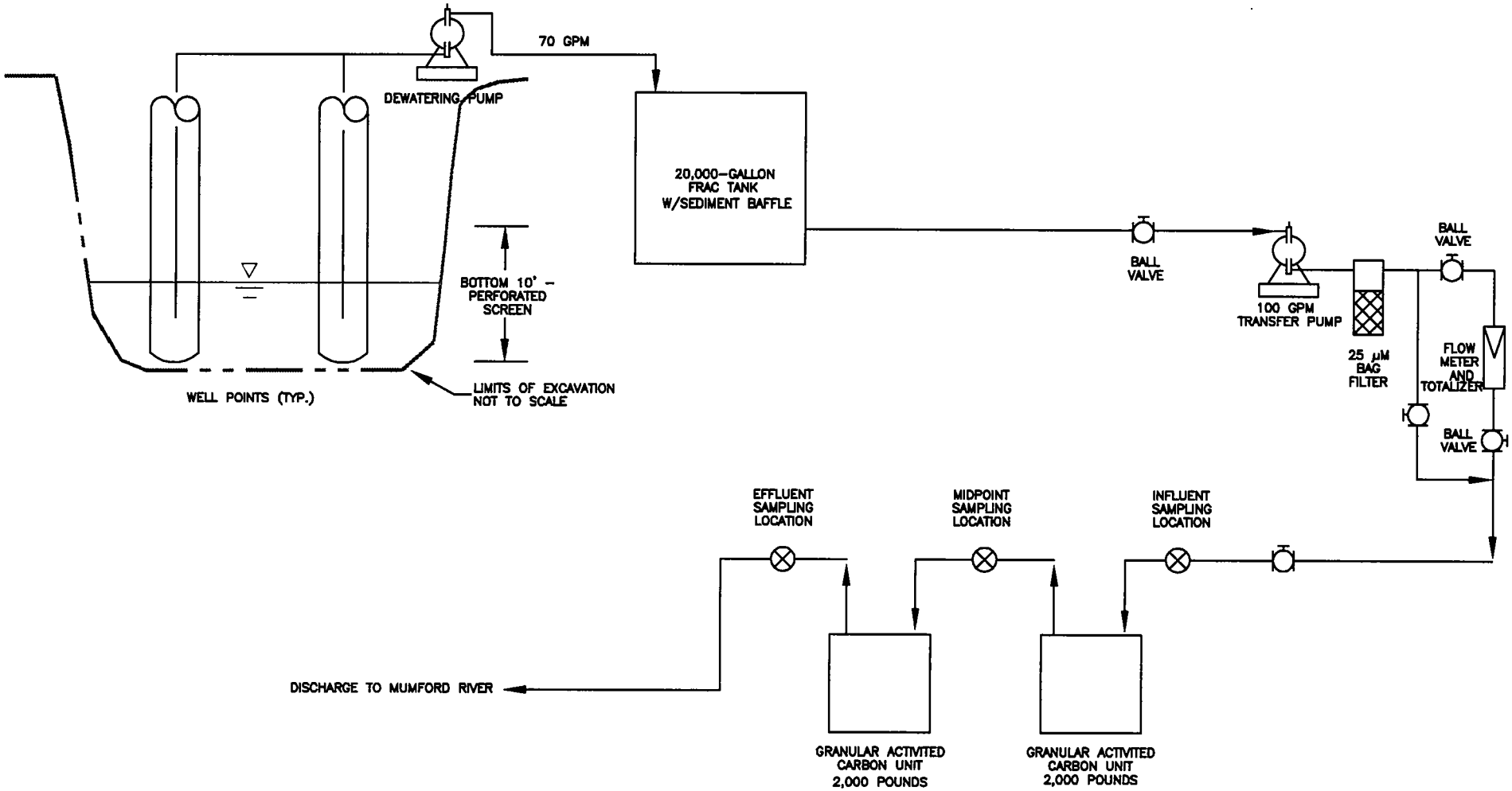


BETA

ENGINEERS • SCIENTISTS

6 BLACKSTONE VALLEY PLACE-LINCOLN, RHODE ISLAND (401) 333-2382

# GROUNDWATER TREATMENT SYSTEM

## MAIN STREET SEWER CONSTRUCTION
## SUTTON, MA

| | DRAWN | CHECKED | APPROVED |
|---|---|---|---|
| BY | SJR | | |
| DATE | 9/05 | | |

| SCALE | PROJECT NO. | DRAWING NUMBER |
|---|---|---|
| AS NOTED | | FIGURE 1 |

**Figure 2**
**Site Locus Map**

**Data Source: Mass GIS**

**BETA**
**BETA Group, Inc.**
ENGINEERS • SCIENTISTS • PLANNERS

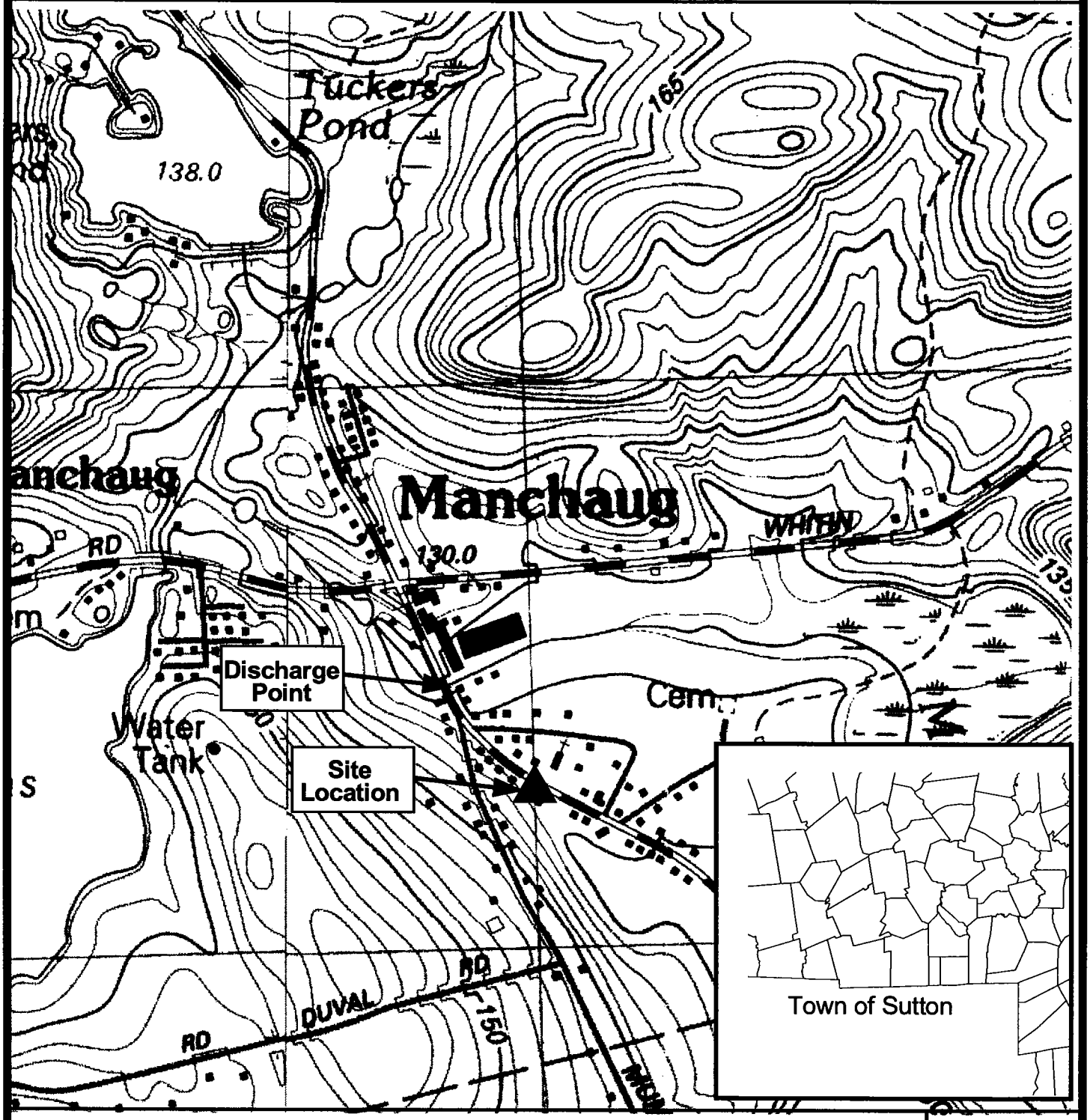


**Town of Sutton**
**Main Street**
**Sewer Construction**

500 0 500 Feet

N W E S

**BETA Job#: 3032**

NETLAB

# REPORT OF ANALYTICAL RESULTS

## NETLAB Case Number Q1006-12

Prepared for:

Attn: Joe McLoughlin
BETA Group, Inc.
6 Blackstone Valley Place
Lincoln, RI 02865

Report Date: October 13, 2005

Lab # RI010

Electronic Copy

NEW ENGLAND TESTING LABORATORY, INC.
1254 Douglas Avenue, North Providence, RI 02904
(401) 353-3420

Total # of Pages: 30

# ANALYTICAL METHOD REPORT CERTIFICATION FORM

| | |
|---|---|
| Laboratory Name: New England Testing Laboratory, Inc. | Project #: |
| Project Location: Sutton | RTN[1]: |

This form provides certifications for the following data set: Q1006-12

Sample Matrices: Groundwater (X) Soil/Sediment ( ) Drinking Water ( ) Other:

| SW-846 Methods Used | | | | | |
|---|---|---|---|---|---|
| | 8260B ( ) | 8151A ( ) | 8330 ( ) | 6010B ( ) | 7470A/1A ( ) |
| | 8270C ( ) | 8081A ( ) | VPH ( ) | 6020 ( ) | 9014M[2] ( ) |
| | 8082 ( ) | 8021B ( ) | EPH ( ) | 7000 S[3] ( ) | Other: (X) |

1 List Release Tracking Number (RTN), if known
2 M – SW-846 Method 9014 or MADEP Physiologically Available Cyanide (PAC) Method
3 S – SW-846 Methods 7000 Series List individual method and analyte

***An affirmative response to questions A, B, and C is required for "Presumptive Certainty" status***

| | | |
|---|---|---|
| A | Were all samples received by the laboratory in a condition consistent with that described on the Chain-of Custody documentation for the data set? | Yes (X) No[1] ( ) |
| B | Were all QA/QC procedures required for the specified analytical method(s) included in this report followed, including the requirement to note and discuss in a narrative QC data that did not meet appropriate performance standards or guidelines? | Yes (X) No[1] ( ) |
| C | Does the analytical data included in this report meet all the requirements for "Presumptive Certainty", as described in Section 2.0 of the MADEP document CAM VII A, "Quality Assurance and Quality Control Guidelines for the Acquisition and Reporting of Analytical Data"? | Yes (X) No[1] ( ) Not Applicable ( ) |
| D | ***VPH and EPH Methods only***: Was the VPH and EPH Method conducted without significant modifications (see Section 11.3 of respective Methods) | Yes ( ) No[1] ( ) |

***A response to questions E and F below is required for "Presumptive Certainty" status***

| | | |
|---|---|---|
| E | Were all QC performance standards and recommendations for the specified methods achieved? | Yes ( ) No[1] (X) |
| F | Were results for all analyte-list compounds/elements for the specified method(s) reported? | Yes ( ) No[1] (X) |

*[1]All NO answers must be addressed in an attached Environmental Laboratory case narrative.*

***I, the undersigned, attest under the pains and penalties of perjury that, based upon my personal inquiry of those responsible for obtaining the information, the material contained in this analytical report is, to the best of my knowledge and belief, accurate and complete.***

Signature: Mark H. Bishop Position: Laboratory Director

Printed Name: Mark H. Bishop Date: 10/13/2005

## ANALYTICAL METHOD REPORT CERTIFICATION FORM

| | |
|---|---|
| Laboratory Name: New England Testing Laboratory, Inc. | Project #: |
| Project Location: Sutton | RTN[1]: |

This form provides certifications for the following data set: Q1006-12

Sample Matrices: Groundwater (X) Soil/Sediment ( ) Drinking Water ( ) Other:

| SW-846 Methods Used | | | | | |
|---|---|---|---|---|---|
| | 8260B ( ) | 8151A ( ) | 8330 ( ) | 6010B ( ) | 7470A/1A ( ) |
| | 8270C ( ) | 8081A ( ) | VPH ( ) | 6020 ( ) | 9014M[2] ( ) |
| | 8082 ( ) | 8021B ( ) | EPH ( ) | 7000 S[3] ( ) | Other: (X) |

1 List Release Tracking Number (RTN), if known
2 M – SW-846 Method 9014 or MADEP Physiologically Available Cyanide (PAC) Method
3 S – SW-846 Methods 7000 Series List individual method and analyte

***An affirmative response to questions A, B, and C is required for "Presumptive Certainty" status***

| | | |
|---|---|---|
| A | Were all samples received by the laboratory in a condition consistent with that described on the Chain-of Custody documentation for the data set? | Yes (X) No[1] ( ) |
| B | Were all QA/QC procedures required for the specified analytical method(s) included in this report followed, including the requirement to note and discuss in a narrative QC data that did not meet appropriate performance standards or guidelines? | Yes (X) No[1] ( ) |
| C | Does the analytical data included in this report meet all the requirements for "Presumptive Certainty", as described in Section 2.0 of the MADEP document CAM VII A, "Quality Assurance and Quality Control Guidelines for the Acquisition and Reporting of Analytical Data"? | Yes (X) No[1] ( ) Not Applicable ( ) |
| D | ***VPH and EPH Methods only***: Was the VPH and EPH Method conducted without significant modifications (see Section 11.3 of respective Methods) | Yes ( ) No[1] ( ) |

***A response to questions E and F below is required for "Presumptive Certainty" status***

| | | |
|---|---|---|
| E | Were all QC performance standards and recommendations for the specified methods achieved? | Yes (X) No[1] ( ) |
| F | Were results for all analyte-list compounds/elements for the specified method(s) reported? | Yes (X) No[1] ( ) |

[1] *All NO answers must be addressed in an attached Environmental Laboratory case narrative.*

***I, the undersigned, attest under the pains and penalties of perjury that, based upon my personal inquiry of those responsible for obtaining the information, the material contained in this analytical report is, to the best of my knowledge and belief, accurate and complete.***

Signature: Jodi Lyons Position: Director, Inorganics

Printed Name: Jodi Lyons Date: 10/12/2005

## STATEMENTS/CERTIFICATIONS REQUIRED BY THE NATIONAL ENVIRONMENTAL LABORATORY APPROVAL CONFERENCE (NELAC)

New England Testing Laboratory is certified under the National Environmental Laboratory Approval Program (NELAP). This certification requires the following statements and certifications be included in our report.

This report shall not be reproduced, except in full, without written approval of the laboratory.

New England Testing certifies that the test results contained within this report meet all NELAC requirements except as detailed in the Case Narrative section of this report.

**SAMPLES SUBMITTED and REQUEST FOR ANALYSIS:**

The samples listed in Table I were submitted to New England Testing Laboratory on October 6, 2005. The group of samples appearing in this report was assigned an internal identification number (case number) for laboratory information management purposes. The client's designations for the individual samples, along with our case numbers, are used to identify the samples in this report. The case number for this sample submission is Q1006-12.

Custody records are included in this report.

**Site: Sutton**

**TABLE I, Samples Submitted**

| Sample ID | Date Sampled | Matrix | Analysis Requested |
|---|---|---|---|
| | | | |
| Main Street GW | 10/6/05 | Water | Table II |

## TABLE II, Analysis and Methods

| ANALYSIS | DETERMINATIVE METHOD |
|---|---|
| Volatile Organic Compounds | 624 |
| PCBs | 608 |
| Polynuclear Aromatic Hydrocarbons | 625 |
| Total Petroleum Hydrocarbons | 1664A |
| Total Residual Chlorine | 330.5 |
| Hexavalent Chromium | 7196A |
| Trivalent Chromium | 3500-Cr-D/200.7 |
| Total Suspended Solids | 160.2 |
| Total Cyanide | 335.2 |
| Total Metals | |
| Antimony | 200.7 |
| Arsenic | 3113B |
| Cadmium | 3113B |
| Chromium | 200.7 |
| Copper | 200.7 |
| Iron | 200.7 |
| Lead | 200.7 |
| Mercury | 245.1 |
| Nickel | 200.7 |
| Selenium | 200.7 |
| Silver | 200.7 |
| Zinc | 200.7 |

These methods are documented in:

*Standard Methods for the Examination of Water and Wastewater*, 18th Edition, 1992, APHA, AWWA-WPCF.

*Manual of Methods for Chemical Analysis of Water and Water Wastes*, EPA-600/4-79-020 (Revised 1983), USEPA/EMSL.

EPA-821-B-94-004

40 CFR 136, *Guidelines Establishing Test Procedures for the Analysis of Pollutants Under the Clean Water Act*, Office of Federal Register National Archives and Records Administration.

**CASE NARRATIVE:**

Sample Receipt:

No sample for ms/msd/duplicate analysis was supplied. No trip blank or field was supplied. (This does not qualify the analytical results but does prevent conducting these SW-846 {Chapter 1, Section 3.4} QA Audits.)

The samples were received on ice at 13 deg. C. and were taken just prior to delivery to the laboratory.

The samples were received in the appropriate containers.

The chain of custody was adequately completed and corresponded to the samples submitted.

Metals:

All analyses were performed according to NETLAB's documented Standard Operating Procedures, within all required holding times, and with appropriate quality control measures. All QC was within laboratory established acceptance criteria. The samples were received, processed, and reported with no anomalies.

Volatile Organics:

An extended 624 compound list was reported per client request.

All samples were analyzed within method specified holding times and according to NETLAB's documented standard operating procedures. The results for the associated calibration, method blank and laboratory control sample (LCS) were within method specified quality control criteria.

Semivolatile Organics:

An abbreviated 625 compound list was reported per client request.

All samples were extracted and analyzed within method specified holding times and according to NETLAB's documented standard operating procedures. The results for the associated calibration, method blank and laboratory control sample (LCS) were within method specified quality control criteria.

PCBs:

All samples were extracted and analyzed within method specified holding times and according to NETLAB's documented standard operating procedures. The results for the associated calibration, method blank and laboratory control sample (LCS) were within method specified quality control criteria.

The ongoing calibration was within specifications. The surrogate associated with sample "Main Street GW" was spiked at a level below detectable limits. As a result, the surrogate was not reported. There were no other anomalies or non-conformances encountered. We conclude that the data reliability is not compromised by the excursions.

General Chemistry:

Total Residual Chlorine: No anomalies or excursions from QC limits
Total Suspended Solids: No anomalies or excursions from QC limits
Total Cyanide: No anomalies or excursions from QC limits
Hexavalent Chromium: No anomalies or excursions from QC limits
Total Petroleum Hydrocarbons: No anomalies or excursions from QC limits

Sample Results

**Main Street GW 5**

| Parameter | Result, mg/l | Reporting Limit | Date Analyzed |
|---|---|---|---|
| | | | |
| Hexavalent Chromium | N.D. | 0.01 | 10/6/05 @ 15:26 |
| Trivalent Chromium | N.D. | 0.01 | 10/11/05* |
| Total Suspended Solids | 2 | 1 | 10/7/05 |
| Total Residual Chlorine | N.D. | 0.4 | 10/7/05 |
| Total Cyanide | N.D. | 0.01 | 10/12/05 |
| Total Petroleum Hydrocarbons | 3 | 2 | 10/13/05 |

N.D. = Not Detected
*Date Completed

# METALS RESULTS

The presence of the NETLAB LOGO in the top right corner of each page in this section indicates:

The Technical Manager of the Metals Analysis Department certifies that the results included in this section have been reviewed and approved. Any exceptions or qualifications of substance have been reported in the case narrative.

New England Testing Laboratory, Inc.

## METALS RESULTS

Case Number: Q1006-12
Sample ID: Main Street GW
Date collected: 10/06/05
Matrix WATER
Sample Type: TOTAL

**Analyst** CC/RM

| Parameter | CAS Number | Preparative Method | Analytical Method | Result | Reporting Limit | Detection Limit | Units | Date of Preparation | Date Analyzed |
|---|---|---|---|---|---|---|---|---|---|
| | | | | | | | | | |
| Antimony | 7440-36-0 | NA | 200.7 | ND | 0.005 | 0.005 | mg/l | 10/7/05 | 10/11/05 |
| Arsenic | 7440-38-2 | NA | 3113B | ND | 0.005 | 0.005 | mg/l | 10/7/05 | 10/11/05 |
| Cadmium | 7440-43-9 | NA | 3113B | ND | 0.0005 | 0.0005 | mg/l | 10/7/05 | 10/10/05 |
| Chromium | 7440-47-3 | NA | 200.7 | ND | 0.005 | 0.005 | mg/l | 10/7/05 | 10/11/05 |
| Copper | 7440-50-8 | NA | 200.7 | ND | 0.02 | 0.02 | mg/l | 10/7/05 | 10/11/05 |
| Iron | 7439-89-6 | NA | 200.7 | 0.38 | 0.10 | 0.10 | mg/l | 10/7/05 | 10/11/05 |
| Lead | 7439-92-1 | NA | 200.7 | ND | 0.005 | 0.005 | mg/l | 10/7/05 | 10/11/05 |
| Mercury | 7439-97-6 | NA | 245.1 | ND | 0.0002 | 0.0002 | mg/l | 10/11/05 | 10/11/05 |
| Nickel | 7440-02-0 | NA | 200.7 | 0.010 | 0.005 | 0.005 | mg/l | 10/7/05 | 10/11/05 |
| Selenium | 7782-49-2 | NA | 200.7 | ND | 0.01 | 0.01 | mg/l | 10/7/05 | 10/11/05 |
| Silver | 7440-22-4 | NA | 200.7 | ND | 0.005 | 0.005 | mg/l | 10/7/05 | 10/11/05 |
| Zinc | 7440-66-6 | NA | 200.7 | 0.03 | 0.02 | 0.02 | mg/l | 10/7/05 | 10/11/05 |

ND indicates not Detected

## METALS RESULTS

Sample ID: METHOD BLANK

Matrix WATER

Sample Type: Preparation Blank

**Analyst** CC/RM

| Parameter | CAS Number | Preparative Method | Analytical Method | Result | Reporting Limit | Detection Limit | Units | Date of Preparation | Date Analyzed |
|---|---|---|---|---|---|---|---|---|---|
| | | | | | | | | | |
| Antimony | 7440-36-0 | NA | 200.7 | ND | 0.005 | 0.005 | mg/l | 10/7/05 | 10/11/05 |
| Arsenic | 7440-38-2 | NA | 3113B | ND | 0.005 | 0.005 | mg/l | 10/7/05 | 10/11/05 |
| Cadmium | 7440-43-9 | NA | 3113B | ND | 0.0005 | 0.0005 | mg/l | 10/7/05 | 10/10/05 |
| Chromium | 7440-47-3 | NA | 200.7 | ND | 0.005 | 0.005 | mg/l | 10/7/05 | 10/11/05 |
| Copper | 7440-50-8 | NA | 200.7 | ND | 0.02 | 0.02 | mg/l | 10/7/05 | 10/11/05 |
| Iron | 7439-89-6 | NA | 200.7 | ND | 0.10 | 0.10 | mg/l | 10/7/05 | 10/11/05 |
| Lead | 7439-92-1 | NA | 200.7 | ND | 0.005 | 0.005 | mg/l | 10/7/05 | 10/11/05 |
| Mercury | 7439-97-6 | NA | 245.1 | ND | 0.0002 | 0.0002 | mg/l | 10/11/05 | 10/11/05 |
| Nickel | 7440-02-0 | NA | 200.7 | ND | 0.005 | 0.005 | mg/l | 10/7/05 | 10/11/05 |
| Selenium | 7782-49-2 | NA | 200.7 | ND | 0.01 | 0.01 | mg/l | 10/7/05 | 10/11/05 |
| Silver | 7440-22-4 | NA | 200.7 | ND | 0.005 | 0.005 | mg/l | 10/7/05 | 10/11/05 |
| Zinc | 7440-66-6 | NA | 200.7 | ND | 0.02 | 0.02 | mg/l | 10/7/05 | 10/11/05 |

ND indicates not Detected

# LABORATORY CONTROL SAMPLE RECOVERY

| Parameter | True Value | Result | Units | Recovery, % | LCL, % | UCL, % | Date Analyzed |
|---|---|---|---|---|---|---|---|
| Antimony | 1 | 0.946 | mg/l | 94.6 | 89 | 108 | 10/11/05 |
| Arsenic | 0.04 | 0.04097 | mg/l | 102 | 76 | 113 | 10/11/05 |
| Cadmium | 0.005 | 0.00517 | mg/l | 103 | 80 | 122 | 10/10/05 |
| Chromium | 1 | 0.946 | mg/l | 94.6 | 89 | 110 | 10/11/05 |
| Copper | 1 | 1.02 | mg/l | 102 | 87 | 113 | 10/11/05 |
| Iron | 1 | 1 | mg/l | 100 | 74 | 122 | 10/11/05 |
| Lead | 1 | 0.957 | mg/l | 95.7 | 87 | 112 | 10/11/05 |
| Mercury | 0.001 | 0.001 | mg/l | 100 | 89 | 114 | 10/11/05 |
| Nickel | 1 | 0.974 | mg/l | 97.4 | 89 | 109 | 10/11/05 |
| Selenium | 1 | 0.935 | mg/l | 93.5 | 83 | 113 | 10/11/05 |
| Silver | 1 | 0.987 | mg/l | 98.7 | 85 | 111 | 10/11/05 |
| Zinc | 1 | 0.978 | mg/l | 97.8 | 91 | 110 | 10/11/05 |

# RESULTS: PCBs

The presence of the NETLAB LOGO in the top right corner of each page in this section indicates:

The Technical Manager of the Organics Analysis Department certifies that the samples included in this section have been prepared and analyzed using the procedures cited and that the results have been reviewed and approved. Any exceptions or qualifications of substance have been reported in the case narrative.

| | | |
|---|---|---|
| **Sample: Main St. GW** | | Analyst's Initials: DC |
| **Case No. Q1006-12** | | |
| **Date Collected: 10/6/05** | | |
| **Sample Matrix: Water** | | |
| **Subject: PCBs** | Date Extracted | Date Analyzed |
| **Analytical Method: EPA 608** | 10/7/05 | 10/9/05 |
| | | |
| Compound | Concentration ug/l (ppb) | Reporting Limit |
| PCB-1016 | N.D. | 0.2 |
| PCB-1221 | N.D. | 0.4 |
| PCB-1232 | N.D. | 0.2 |
| PCB-1242 | N.D. | 0.2 |
| PCB-1248 | N.D. | 0.2 |
| PCB-1254 | N.D. | 0.2 |
| PCB-1260 | N.D. | 0.2 |
| | | |
| Surrogates: | | |
| Compound | % Recovery | Limits |
| TCMX | * | 25-141 |
| DCBP | * | 41-156 |

| | | |
|---|---|---|
| **Sample: Method Blank** | | Analyst's Initials: DC |
| **Case No. Q1006-12** | | |
| **Date Collected: NA** | | |
| **Sample Matrix: Water** | | |
| **Subject: PCBs** | Date Extracted | Date Analyzed |
| **Analytical Method: EPA 608** | 10/7/05 | 10/9/05 |
| | | |
| Compound | Concentration ug/l (ppb) | Reporting Limit |
| PCB-1016 | N.D. | 0.2 |
| PCB-1221 | N.D. | 0.4 |
| PCB-1232 | N.D. | 0.2 |
| PCB-1242 | N.D. | 0.2 |
| PCB-1248 | N.D. | 0.2 |
| PCB-1254 | N.D. | 0.2 |
| PCB-1260 | N.D. | 0.2 |
| | | |
| Surrogates: | | |
| Compound | % Recovery | Limits |
| TCMX | 88 | 25-141 |
| DCBP | 85 | 41-156 |

# PCB Laboratory Control Spike

| | | | | |
|---|---|---|---|---|
| **Date Collected: NA** | | | Analyst: | DC |
| **Sample Matrix: Water** | | | | |
| **Subject: PCB** | Date Extracted | | | Date Analyzed |
| **Prep Method: EPA 3510C** | 10/7/05 | | | 10/9/05 |
| **Analytical Method: EPA 8082** | | | | |
| | | | | |
| Compound | Amount Spiked ug/l | Result ug/l | Recovery % | Recovery Limits |
| 1254-1 | 0.50 | 0.56 | 112 | 40-140 |
| | | | | |

# RESULTS: VOLATILE ORGANIC COMPOUNDS

The presence of the NETLAB LOGO in the top right corner of each page in this section indicates:

The Technical Manager of the Organics Analysis Department certifies that the samples included in this section have been prepared and analyzed using the procedures cited and that the results have been reviewed and approved. Any exceptions or qualifications of substance have been reported in the case narrative.

NETLAB

# VOLATILE ORGANICS ANALYSIS DATA SHEET

Case No.: Q1006-12

Method: 8260

Matrix: (soil/water) WATER

Sample wt/vol: 5.0 (g/ml) ML

% Moisture

Soil Extract Volume: (uL)

Analyst's Initials:

Client Name: BETA Group, Inc.

Lab Sample ID: Main St GW

Lab File ID: OCT0909.D

Date Sampled: 10/6/2005

Date Analyzed: 10/9/2005

Dilution Factor: 1.0

Soil Aliquot Volume: (uL)

| CAS NO. | COMPOUND | UNITS: ug/L | Q |
|---|---|---|---|
| 75-01-4 | Vinyl Chloride | 1.0 | U |
| 67-64-1 | Acetone | 5.0 | U |
| 75-35-4 | 1,1-Dichloroethene | 1.0 | U |
| 75-09-2 | Methylene Chloride | 2.0 | U |
| 1634-04-4 | tert-Butyl methyl ether | 2.2 | |
| 75-34-3 | 1,1-Dichloroethane | 1.0 | U |
| 156-59-2 | cis-1,2-Dichloroethene | 1.0 | U |
| 71-55-6 | 1,1,1-Trichloroethane | 1.0 | U |
| 563-58-6 | 1,1-Dichloropropene | 1.0 | U |
| 56-23-5 | Carbon Tetrachloride | 1.0 | U |
| 71-43-2 | Benzene | 1.0 | U |
| 107-06-2 | 1,2-Dichloroethane | 1.0 | U |
| 79-01-6 | Trichloroethene | 1.0 | U |
| 75-65-0 | tert butyl Alcohol | 1.0 | U |
| 994-05-8 | tert-amyl methyl ether | 1.0 | U |
| 123911 | 1,4-Dioxane | 1.0 | U |
| 106-93-4 | Ethylene Dibromide | 1.0 | U |
| 108-88-3 | Toluene | 1.0 | U |
| 79-00-5 | 1,1,2-Trichloroethane | 1.0 | U |
| 127-18-4 | Tetrachloroethene | 1.0 | U |
| 100-41-4 | Ethylbenzene | 1.0 | U |
| 1330-20-7 | m & p-Xylene | 2.0 | U |
| 95-47-6 | o-Xylene | 1.0 | U |
| 75-87-3 | Chloromethane | 1.0 | U |
| 541-73-1 | 1,3-Dichlorobenzene | 1.0 | U |
| 106-46-7 | 1,4-Dichlorobenzene | 1.0 | U |
| 95-50-1 | 1,2-Dichlorobenzene | 1.0 | U |
| 120-82-1 | 1,2,4-Trichlorobenzene | 1.0 | U |

U=not detected, D=diluted, E=over range (another data sheet is included), J=below limit, B=found in blank

New England Testing Laboratory, Inc.

NETLAB

VOLATILE ORGANICS ANALYSIS DATA SHEET

Case No.: Q1006-12

Method: 8260

Matrix: (soil/water) WATER

Sample wt/vol: 5.0 (g/ml) ML

% Moisture

Soil Extract Volume: (uL)

Analyst's Initials:

Client Name: BETA Group, Inc.

Lab Sample ID: VBLK100905

Lab File ID: OCT0904.D

Date Sampled: 10/6/2005

Date Analyzed: 10/9/2005

Dilution Factor: 1.0

Soil Aliquot Volume: (uL)

| CAS NO. | COMPOUND | UNITS: ug/L | Q |
|---|---|---|---|
| 75-01-4 | Vinyl Chloride | 1.0 | U |
| 67-64-1 | Acetone | 5.0 | U |
| 75-35-4 | 1,1-Dichloroethene | 1.0 | U |
| 75-09-2 | Methylene Chloride | 2.0 | U |
| 1634-04-4 | tert-Butyl methyl ether | 2.0 | U |
| 75-34-3 | 1,1-Dichloroethane | 1.0 | U |
| 156-59-2 | cis-1,2-Dichloroethene | 1.0 | U |
| 71-55-6 | 1,1,1-Trichloroethane | 1.0 | U |
| 563-58-6 | 1,1-Dichloropropene | 1.0 | U |
| 56-23-5 | Carbon Tetrachloride | 1.0 | U |
| 71-43-2 | Benzene | 1.0 | U |
| 107-06-2 | 1,2-Dichloroethane | 1.0 | U |
| 79-01-6 | Trichloroethene | 1.0 | U |
| 75-65-0 | tert butyl Alcohol | 1.0 | U |
| 994-05-8 | tert-amyl methyl ether | 1.0 | U |
| 123911 | 1,4-Dioxane | 1.0 | U |
| 106-93-4 | Ethylene Dibromide | 1.0 | U |
| 108-88-3 | Toluene | 1.0 | U |
| 79-00-5 | 1,1,2-Trichloroethane | 1.0 | U |
| 127-18-4 | Tetrachloroethene | 1.0 | U |
| 100-41-4 | Ethylbenzene | 1.0 | U |
| 1330-20-7 | m & p-Xylene | 2.0 | U |
| 95-47-6 | o-Xylene | 1.0 | U |
| 75-87-3 | Chloromethane | 1.0 | U |
| 541-73-1 | 1,3-Dichlorobenzene | 1.0 | U |
| 106-46-7 | 1,4-Dichlorobenzene | 1.0 | U |
| 95-50-1 | 1,2-Dichlorobenzene | 1.0 | U |
| 120-82-1 | 1,2,4-Trichlorobenzene | 1.0 | U |

U=not detected, D=diluted, E=over range (another data sheet is included), J=below limit, B=found in blank

New England Testing Laboratory, Inc.

2A

WATER VOLATILE SYSTEM MONITORING COMPOUND RECOVERY

Lab Name: New England Testing Lab Contract: Sutton

Lab Code: RI010 Case No.: Q1006-12 SAS No.: BETA SDG No.: _____

| | EPA SAMPLE NO. | SMC1 # | SMC2 # | SMC3 # | TOT OUT |
|---|---|---|---|---|---|
| 01 | VBLK100905 | 102 | 97 | 93 | 0 |
| 02 | MAIN ST GW | 104 | 99 | 94 | 0 |
| 03 | VLCS051009 | 86 | 102 | 100 | 0 |

| | | | QC LIMITS |
|---|---|---|---|
| SMC1 | = | 1,2-Dichloroethane-D4 | (76-130) |
| SMC2 | = | Toluene-D8 | (85-124) |
| SMC3 | = | Bromofluorobenzene | (77-121) |

# Column to be used to flag recovery values

* Values outside of contract required QC limits

D System Monitoring Compound diluted out

New England Testing Laboratory, Inc.



FORM II VOA-1

NELLLAB

# Volatile Organics Laboratory Control Spike

**Date Analyzed: 10/10/05** **Sample ID: VLCS051009**

| Compound | Spike Added (ug/L) | Spike Result (ug/L) | Recovery, % | Lower Control Limit, % | Upper Control Limit, % |
|---|---|---|---|---|---|
| Chloromethane | 50 | 51 | 103 | 70 | 164 |
| Vinyl Chloride | 50 | 51 | 103 | 70 | 155 |
| Bromomethane | 50 | 51 | 102 | 15 | 213 |
| Chloroethane | 50 | 52 | 104 | 52 | 193 |
| 1,1-Dichloroethene | 50 | 50 | 101 | 77 | 137 |
| Methylene Chloride | 50 | 51 | 103 | 76 | 130 |
| trans-1,2 Dichloroethene | 50 | 52 | 104 | 74 | 128 |
| 1,1-Dichloroethane | 50 | 51 | 102 | 78 | 126 |
| 2-Butanone | 50 | 55 | 110 | 65 | 146 |
| cis-1,2-Dichloroethene | 50 | 52 | 103 | 76 | 123 |
| Chloroform | 50 | 56 | 113 | 83 | 125 |
| Bromochloromethane | 50 | 50 | 100 | 76 | 121 |
| 1,1,1-Trichloroethane | 50 | 52 | 105 | 73 | 129 |
| 1,1-Dichloropropene | 50 | 53 | 107 | 79 | 122 |
| Carbon Tetrachloride | 50 | 52 | 105 | 74 | 129 |
| Benzene | 50 | 53 | 106 | 75 | 117 |
| 1,2-Dichloroethane | 50 | 53 | 106 | 78 | 123 |
| Trichloroethene | 50 | 52 | 104 | 65 | 141 |
| 1,2-Dichloropropane | 50 | 52 | 104 | 81 | 121 |
| Bromodichloromethane | 50 | 53 | 106 | 74 | 116 |
| Dibromomethane | 50 | 52 | 103 | 80 | 115 |
| MIBK | 50 | 53 | 106 | 72 | 147 |
| cis-1,3-Dichloropropene | 50 | 55 | 110 | 47 | 132 |
| Toluene | 50 | 52 | 105 | 74 | 119 |
| Trans-1,3-Dichloropropene | 50 | 54 | 109 | 52 | 136 |
| 1,1,2-Trichloroethane | 50 | 53 | 105 | 81 | 118 |
| Ethylene Dibromide | 50 | 53 | 105 | 80 | 121 |
| 2-Hexanone | 50 | 52 | 104 | 65 | 153 |
| Tetrachloroethene | 50 | 52 | 103 | 29 | 190 |
| 1,3-Dichloropropane | 50 | 52 | 103 | 59 | 143 |
| Chlorodibromomethane | 50 | 51 | 103 | 79 | 114 |
| Chlorobenzene | 50 | 52 | 105 | 74 | 115 |
| 1,1,1,2-Tetrachloroethane | 50 | 52 | 105 | 77 | 116 |
| Ethylbenzene | 50 | 52 | 104 | 77 | 117 |
| m & p-Xylene | 100 | 103 | 103 | 58 | 129 |
| o-Xylene | 50 | 52 | 103 | 24 | 175 |
| Styrene | 50 | 52 | 104 | 76 | 111 |
| Bromoform | 50 | 52 | 104 | 78 | 115 |
| Isopropylbenzene | 50 | 52 | 105 | 82 | 125 |
| 1,1,2,2-Tetrachloroethane | 50 | 51 | 103 | 50 | 142 |

NELLAB

## Volatile Organics Laboratory Control Spike

**Date Analyzed: 10/10/05** **Sample ID: VLCS051009**

| Compound | Spike Added (ug/L) | Spike Result (ug/L) | Recovery, % | Lower Control Limit, % | Upper Control Limit, % |
|---|---|---|---|---|---|
| Bromobenzene | 50 | 52 | 104 | 78 | 116 |
| 1,2,3-Trichloropropane | 50 | 51 | 103 | 76 | 120 |
| n-Propylbenzene | 50 | 52 | 105 | 75 | 118 |
| 2-Chlorotoluene | 50 | 53 | 106 | 73 | 114 |
| 1,3,5-Trimethylbenzene | 50 | 52 | 103 | 74 | 117 |
| 4-Chlorotoluene | 50 | 53 | 106 | 72 | 115 |
| tert-Butylbenzene | 50 | 52 | 104 | 80 | 137 |
| 1,2,4-Trimethylbenzene | 50 | 52 | 103 | 72 | 118 |
| sec-Butylbenzene | 50 | 52 | 104 | 73 | 114 |
| p-Isopropyltoluene | 50 | 52 | 105 | 72 | 140 |
| 1,3-Dichlorobenzene | 50 | 52 | 105 | 69 | 116 |
| 1,4-Dichlorobenzene | 50 | 53 | 106 | 69 | 117 |
| n-Butylbenzene | 50 | 54 | 107 | 65 | 130 |
| 1,2-Dichlorobenzene | 50 | 53 | 105 | 73 | 113 |
| 1,2-Dibromo-3-chloropropane | 50 | 52 | 104 | 46 | 138 |
| 1,2,4-Trichlorobenzene | 50 | 52 | 105 | 35 | 157 |
| Naphthalene | 50 | 51 | 102 | 17 | 186 |
| 1,2,3-Trichlorobenzene | 50 | 51 | 103 | 32 | 186 |

# RESULTS: SEMIVOLATILE ORGANIC COMPOUNDS

The presence of the NETLAB LOGO in the top right corner of each page in this section indicates:

The Technical Manager of the Organics Analysis Department certifies that the samples included in this section have been prepared and analyzed using the procedures cited and that the results have been reviewed and approved. Any exceptions or qualifications of substance have been reported in the case narrative.

1B

SEMIVOLATILE ORGANICS ANALYSIS DATA SHEET

Case No.: Q1006-12

Method: 8270

Matrix: (soil/water/air) WATER

Sample wt/vol: 1000 (g/ml) ML

Level: (low/med) LOW

% Moisture:

Concentrated Extract Volume: 1000 (uL)

Injection Volume: 1.0 (uL)

Analyst's Initials: KJK

Client Name: BETA Group, Inc.

Lab Sample ID: Main Street GW

Lab File ID: OCT0708.D

Date Sampled: 10/6/2005

Date Extracted: 10/7/2005

Date Analyzed: 10/7/2005

Dilution Factor: 1.0

| CAS NO. | COMPOUND | UNITS: UG/L | Q |
|---|---|---|---|
| 91-20-3 | Naphthalene | 1.0 | U |
| 91-57-6 | 2-Methylnaphthalene | 1.0 | U |
| 208-96-8 | Acenaphthylene | 1.0 | U |
| 83-32-9 | Acenaphthene | 1.0 | U |
| 86-73-7 | Fluorene | 1.0 | U |
| 85-01-8 | Phenanthrene | 1.0 | U |
| 120-12-7 | Anthracene | 1.0 | U |
| 206-44-0 | Fluoranthene | 1.0 | U |
| 129-00-0 | Pyrene | 1.0 | U |
| 56-55-3 | Benzo(a)anthracene | 1.0 | U |
| 218-01-9 | Chrysene | 1.0 | U |
| 205-99-2 | Benzo(b)fluoranthene | 1.0 | U |
| 207-08-9 | Benzo(k)fluoranthene | 1.0 | U |
| 50-32-8 | Benzo(a)pyrene | 1.0 | U |
| 193-39-5 | Indeno(1,2,3-cd)pyrene | 1.0 | U |
| 53-70-3 | Dibenz(a,h)anthracene | 1.0 | U |
| 191-24-2 | Benzo(g,h,i)perylene | 1.0 | U |

U=not detected, D=diluted, E=over range (another data sheet is included), J=below limit, B=found in blank

New England Testing Laboratory, Inc.

FORM I SV-1

1B

SEMIVOLATILE ORGANICS ANALYSIS DATA SHEET

NETLLAB

Case No.: Q1006-12

Method: 8270

Matrix: (soil/water/air) WATER

Sample wt/vol: 1000 (g/ml) ML

Level: (low/med) LOW

% Moisture:

Concentrated Extract Volume: 1000 (uL)

Injection Volume: 1.0 (uL)

Analyst's Initials: KJK

Client Name: BETA Group, Inc.

Lab Sample ID: SBLK100705

Lab File ID: OCT0705.D

Date Sampled: 10/6/2005

Date Extracted: 10/7/2005

Date Analyzed: 10/7/2005

Dilution Factor: 1.0

| CAS NO. | COMPOUND | UNITS: UG/L | Q |
|---|---|---|---|
| 91-20-3 | Naphthalene | 1.0 | U |
| 91-57-6 | 2-Methylnaphthalene | 1.0 | U |
| 208-96-8 | Acenaphthylene | 1.0 | U |
| 83-32-9 | Acenaphthene | 1.0 | U |
| 86-73-7 | Fluorene | 1.0 | U |
| 85-01-8 | Phenanthrene | 1.0 | U |
| 120-12-7 | Anthracene | 1.0 | U |
| 206-44-0 | Fluoranthene | 1.0 | U |
| 129-00-0 | Pyrene | 1.0 | U |
| 56-55-3 | Benzo(a)anthracene | 1.0 | U |
| 218-01-9 | Chrysene | 1.0 | U |
| 205-99-2 | Benzo(b)fluoranthene | 1.0 | U |
| 207-08-9 | Benzo(k)fluoranthene | 1.0 | U |
| 50-32-8 | Benzo(a)pyrene | 1.0 | U |
| 193-39-5 | Indeno(1,2,3-cd)pyrene | 1.0 | U |
| 53-70-3 | Dibenz(a,h)anthracene | 1.0 | U |
| 191-24-2 | Benzo(g,h,i)perylene | 1.0 | U |

U=not detected, D=diluted, E=over range (another data sheet is included), J=below limit, B=found in blank

New England Testing Laboratory, Inc.

FORM I SV-1

2C

WATER SEMIVOLATILE SURROGATE RECOVERY

Lab Name: New England Testing Lab  Case No.: Q1006-12

Lab Code: RI010  Client Name: BETA Group, Inc.

| | Sample ID | S1 # | S2 # | S3 # | TOT OUT |
|---|---|---|---|---|---|
| 01 | SBLK100705 | 85 | 74 | 107 | 0 |
| 02 | SLCS100705 | 91 | 86 | 101 | 0 |
| 03 | MAIN STREET GW | 85 | 66 | 42 | 0 |

| | | | QC LIMITS |
|---|---|---|---|
| S1 | = | Nitrobenzene-d5 | (41-126) |
| S2 | = | 2-Fluorobiphenyl | (17-146) |
| S3 | = | Terphenyl-d14 | (18-210) |

# Column to be used to flag recovery values

* Values outside of contract required QC limits

D Surrogate diluted out

New England Testing Laboratory, Inc.



FORM II SV-1

NETLLAB

# PNA Water Laboratory Control Spike

Date Extracted: 10/7/05
Date Analyzed: 10/7/05

| | Amount Spiked ug/L | Result, ug/L | Recovery % | Recovery Limits |
|---|---|---|---|---|
| Naphthalene | 50 | 27 | 54 | 40-140 |
| 2-Methylnapthalene | 50 | 20 | 40 | 40-140 |
| Acenaphthylene | 50 | 23 | 47 | 40-140 |
| Acenaphthene | 50 | 22 | 44 | 40-140 |
| Fluorene | 50 | 22 | 45 | 40-140 |
| Phenanthrene | 50 | 23 | 46 | 40-140 |
| Anthracene | 50 | 23 | 45 | 40-140 |
| Fluoranthene | 50 | 22 | 44 | 40-140 |
| Pyrene | 50 | 27 | 55 | 40-140 |
| Benzo(a)anthracene | 50 | 22 | 44 | 40-140 |
| Chrysene | 50 | 22 | 44 | 40-140 |
| Benzo(b)fluoranthene | 50 | 21 | 43 | 40-140 |
| Benzo(k)fluoranthene | 50 | 22 | 44 | 40-140 |
| Benzo(a)pyrene | 50 | 23 | 46 | 40-140 |
| Indeno(1,2,3-cd)pyrene | 50 | 20 | 40 | 40-140 |
| Dibenz(a,h)anthracene | 50 | 20 | 40 | 40-140 |
| Benzo(g,h,i)perylene | 50 | 37 | 73 | 40-140 |

New England Testing Laboratory, Inc.

Custody Records

NEW ENGLAND TESTING LABORATORY, INC.
1254 Douglas Avenue
North Providence, RI 02904

## CHAIN OF CUSTODY RECORD

PROJ. NO.

PROJECT NAME: Sutton

CLIENT: Joe McLoughlin @ BetA

| SAMPLE I. D. | DATE | TIME | COMP | GRAB | STATION LOCATION | NO. OF CONTAINERS | TSS | TRC | Cyanide | VOCs by 8260 | PCBs | PAHs | Metals (Antimony, Arsenic, Cadmium, Chromium III, Chromium VI, Copper, lead, mercury, Nickel, Selenium, Silver, Zinc, iron. | REMARKS |
|---|---|---|---|---|---|---|---|---|---|---|---|---|---|---|
| | 10/6/05 | 1:00 | | X | Main St GW | 9 | X | X | X | X | X | X | X | Add TPH as per Steve R. 10/7 Q1006-12 |
| | | | | | | | | | | | | | | Include chromatograms in lab report. |
| | | | | | | | | | | | | | | GW-1 Detection limits must be met. |
| | | | | | | | | | | | | | | 48 Hour Rush TAT. |
| | | | | | | | | | | | | | | Send results to Joe M. |

| Relinquished by: (Signature) | Date/Time | Received by: (Signature) | Relinquished by: (Signature) | Date/Time | Received by: (Signature) |
|---|---|---|---|---|---|
| Paul Smith | 10/6/05 2:18 | NET | | | |
| Relinquished by: (Signature) | Date/Time | Received by: (Signature) | Relinquished by: (Signature) | Date/Time | Received by: (Signature) |
| | | | | | |
| Relinquished by: (Signature) | Date/Time | Received for Laboratory by: (Signature) | Date/Time | Remarks | |
| | | D Sweeney | 10/6/05 1418 | Temp 13° on ice - just taken | |

con-test®
ANALYTICAL LABORATORY

39 Spruce Street ° 2nd Floor ° East Longmeadow, MA 01028 ° FAX 413/525-6405 ° TEL. 413/525-2332

REPORT DATE 10/5/2004

LINCOLN ENVIRONMENTAL, INC.
333 WASHINGTON HWY
SMITHFIELD, RI 02917
ATTN: BETH CORREIRA

CONTRACT NUMBER:
PURCHASE ORDER NUMBER:

PROJECT NUMBER:

**ANALYTICAL SUMMARY**

LIMS BAT #: LIMS-82405
JOB NUMBER: RRR8069

The results of analyses performed on the following samples submitted to the CON-TEST Analytical Laboratory are found in this report.

PROJECT LOCATION: SUTTON

| FIELD SAMPLE # | LAB ID | MATRIX | SAMPLE DESCRIPTION | TEST |
|---|---|---|---|---|
| MW-2 | 04B30630 | GRND WATER | NOT SPECIFIED | vph - water 04 |
| MW-3 | 04B30631 | GRND WATER | NOT SPECIFIED | vph - water 04 |
| MW-6 | 04B30632 | GRND WATER | NOT SPECIFIED | vph - water 04 |
| MW-7 | 04B30633 | GRND WATER | NOT SPECIFIED | vph - water 04 |
| MW-8 | 04B30634 | GRND WATER | NOT SPECIFIED | vph - water 04 |

con-test®
ANALYTICAL LABORATORY

39 Spruce Street ° 2nd Floor ° East Longmeadow, MA 01028 ° FAX 413/525-6405 ° TEL. 413/525-2332

REPORT DATE 10/5/2004

LINCOLN ENVIRONMENTAL, INC.
333 WASHINGTON HWY
SMITHFIELD, RI 02917
ATTN: BETH CORREIRA

CONTRACT NUMBER:
PURCHASE ORDER NUMBER:

PROJECT NUMBER:

**ANALYTICAL SUMMARY**

LIMS BAT #: LIMS-82405
JOB NUMBER: RRR8069

The results of analyses performed on the following samples submitted to the CON-TEST Analytical Laboratory are found in this report.

Comments :

LIMS BATCH NO. : LIMS-82405

CASE NARRATIVE SUMMARY

THERE ARE NO ANALYTICAL ISSUES WHICH AFFECT THE USABILITY OF THE DATA.

DETAILED CASE NARRATIVE

VOLATILE PETROLEUM HYDROCARBONS (VPH) MADEP-VPH-04-1.1

RECOMMENDED SAMPLE HOLDING TIMES WERE NOT EXCEEDED FOR ALL SAMPLES ANALYZED BY THE VPH METHOD UNLESS LISTED BELOW: NONE EXCEEDED

ALL VPH SAMPLES WERE RECEIVED PRESERVED PROPERLY (WATER SAMPLES pH <2; SOIL SAMPLES IN METHANOL WITH A SOIL/METHANOL RATIO OF 1:1 +/- 25% COMPLETELY COVERED BY METHANOL) IN THE PROPER CONTAINERS AT 4° C. +/- 2° AS SPECIFIED ON THE CHAIN-OF-CUSTODY FORM UNLESS SPECIFIED BELOW:

ALL PROPERLY PRESERVED

THE VPH METHOD BLANK WAS FOUND NOT TO BE CONTAMINATED WITH TARGET ANALYTES AT LEVELS ABOVE THE REPORTING LIMIT EXCEPT WHERE LISTED BELOW: NO CONTAMINATION NOTED

ALL VPH SAMPLES WERE ANALYZED UNDILUTED UNLESS SPECIFIED BELOW:

| SAMPLE | DILUTION |
|---|---|
| 04B30631 | UNDILUTED AND 20X |
| 04B30633 | UNDILUTED AND 20X |
| 04B30634 | UNDILUTED AND 20X |

INITIAL AND CONTINUING CALIBRATIONS MET ALL REQUIRED PERFORMANCE STANDARDS FOR THE VPH METHOD EXCEPT AS LISTED BELOW: ALL STANDARDS MET

LABORATORY CONTROL SAMPLE RECOVERIES, LABORATORY CONTROL SAMPLE DUPLICATE RECOVERIES, AND LCS DUPLICATE RPDs FOR ALL VPH COMPONENT STANDARD COMPOUNDS WERE WITHIN CONTROL LIMITS SPECIFIED BY THE METHOD UNLESS LISTED BELOW: NONE OUTSIDE OF CONTROL LIMITS

ALL VPH SURROGATE STANDARD RECOVERIES WERE WITHIN CONTROL LIMITS SPECIFIED BY THE METHOD UNLESS LISTED BELOW: NONE OUTSIDE OF CONTROL LIMITS

VPH MATRIX SPIKE AND MATRIX SPIKE DUPLICATE RECOVERIES, SAMPLE DUPLICATE RPDs AND MSDRPD, IF REQUESTED IN THIS BATCH WERE ALL WITHIN CONTROL LIMITS SPECIFIED BY THE METHOD UNLESS LISTED BELOW: NONE REQUESTED

RESULTS FOR ALL ANALYTE-LIST COMPOUNDS WERE REPORTED FOR VPH UNLESS LISTED BELOW: ALL REPORTED

con-test®
ANALYTICAL LABORATORY

39 Spruce Street * 2nd Floor * East Longmeadow, MA 01028 * FAX 413/525-6405 * TEL. 413/525-2332

REPORT DATE 10/5/2004

LINCOLN ENVIRONMENTAL, INC.
333 WASHINGTON HWY
SMITHFIELD, RI 02917
ATTN: BETH CORREIRA

CONTRACT NUMBER:
PURCHASE ORDER NUMBER:

PROJECT NUMBER:

**ANALYTICAL SUMMARY**

LIMS BAT #: LIMS-82405
JOB NUMBER: RRR8069

The results of analyses performed on the following samples submitted to the CON-TEST Analytical Laboratory are found in this report.

| | | |
|---|---|---|
| AIHA 100033 | AIHA ELLAP (LEAD) 100033 | |
| MASSACHUSETTS MA0100 | NEW HAMPSHIRE NELAP 2516 | NEW JERSEY NELAP NJ MA007 (AIR) |
| CONNECTICUT PH-0567 | VERMONT DOH (LEAD) No. LL015036 | ARIZONA AZ0648 |
| NEW YORK ELAP/NELAP 10899 | RHODE ISLAND (LIC. No. 112) | ARIZONA AZ0654 (AIR) |

I certify that the analyses listed above, unless specifically listed as subcontracted, if any, were performed under my direction according to the approved methodologies listed in this document, and that based upon my inquiry of those individuals immediately responsible for obtaining the information, the material contained in this report is, to the best of my knowledge and belief, accurate and complete.

Edward Denson 10/5/04

SIGNATURE DATE

Tod Kopyscinski
Director of Operations

Sondra S. Kocot
Quality Control Coordinator

Edward Denson
Technical Director

* See end of data tabulation for notes and comments pertaining to this sample

con-test®
ANALYTICAL LABORATORY
39 Spruce Street ° 2nd Floor ° East Longmeadow, MA 01028 ° FAX 413/525-6405 ° TEL. 413/525-2332

BETH CORREIRA
LINCOLN ENVIRONMENTAL, INC.
333 WASHINGTON HWY
SMITHFIELD, RI 02917

10/5/2004


Purchase Order No.:

Project Location: SUTTON
Date Received: 9/24/2004
**Field Sample # : MW-3**
**Sample ID : 04B30631**

Sampled : 9/23/2004
NOT SPECIFIED

Sample Matrix: GRND WATER

LIMS-BAT #: LIMS-82405
Job Number: RRR8069

| | Units | Results | Date Analyzed | Analyst | RL | SPEC Limit Lo | SPEC Limit Hi | P/ F |
|---|---|---|---|---|---|---|---|---|
| Unadjusted C5-C8 Aliphatics | ug/l | 3020. | 10/02/04 | AHM | 100. | | | |
| C5-C8 Aliphatics | ug/l | 2680. | 10/02/04 | AHM | 100. | | | |
| Unadjusted C9-C12 Aliphatics | ug/l | 19500. | 10/02/04 | AHM | 100. | | | |
| C9-C12 Aliphatics | ug/l | 9430. | 10/02/04 | AHM | 100. | | | |
| C9-C10 Aromatics | ug/l | 6450. | 10/02/04 | AHM | 100. | | | |
| Benzene | ug/l | 10.5 | 10/02/04 | AHM | 1.0 | | | |
| Ethyl Benzene | ug/l | 467. | 10/02/04 | AHM | 1.0 | | | |
| MTBE | ug/l | 28.6 | 10/02/04 | AHM | 1.0 | | | |
| Naphthalene | ug/l | 242. | 10/02/04 | AHM | 10.0 | | | |
| Toluene | ug/l | 303. | 10/02/04 | AHM | 1.0 | | | |
| m/p-Xylene | ug/l | 2110. | 10/02/04 | AHM | 2.0 | | | |
| o-Xylene | ug/l | 1060. | 10/02/04 | AHM | 1.0 | | | |

Analytical Method:
MADEP-VPH-04-1.1
SAMPLES ARE CONCENTRATED BY PURGE AND TRAP, FOLLOWED BY GAS CHROMATOGRAPHY ANALYSIS WITH PID/FID DETECTION. SUMMED RANGES ARE REPORTED WITH TARGET COMPOUND CONTRIBUTIONS SUBTRACTED.
C9-C12 ALIPHATIC HYDROCARBONS EXCLUDE THE CONCENTRATION OF C9-C10 AROMATIC HYDROCARBONS.

NO SIGNIFICANT MODIFICATIONS WERE MADE TO THE METHOD.

DETAILS OF ANY NON-CONFORMANCE WITH QA/QC REQUIREMENTS, PERFOMANCE, OR ACCEPTANCE CRITERIA ARE LISTED IN THE NOTES SECTION OF THIS REPORT.

RL = Reporting Limit
ND = Not Detected
NM = Not Measured
* = See end of report for comments and notes applying to this sample

SPEC LIMIT = a client specified recommended or regulatory level for comparison with data to determine PASS (P) or FAIL (F) condition of results.

con-test®
ANALYTICAL LABORATORY
39 Spruce Street ° 2nd Floor ° East Longmeadow, MA 01028 ° FAX 413/525-6405 ° TEL. 413/525-2332

BETH CORREIRA
LINCOLN ENVIRONMENTAL, INC.
333 WASHINGTON HWY
SMITHFIELD, RI 02917

10/5/2004


Purchase Order No.:

Project Location: SUTTON
Date Received: 9/24/2004
**Field Sample # : MW-7**

LIMS-BAT #: LIMS-82405
Job Number: RRR8069

**Sample ID : 04B30633**

Sampled : 9/23/2004
NOT SPECIFIED

Sample Matrix: GRND WATER

| | Units | Results | Date Analyzed | Analyst | RL | SPEC Limit Lo | SPEC Limit Hi | P/ F |
|---|---|---|---|---|---|---|---|---|
| Unadjusted C5-C8 Aliphatics | ug/l | 1850. | 10/02/04 | AHM | 100. | | | |
| C5-C8 Aliphatics | ug/l | 1820. | 10/02/04 | AHM | 100. | | | |
| Unadjusted C9-C12 Aliphatics | ug/l | 15500. | 10/02/04 | AHM | 100. | | | |
| C9-C12 Aliphatics | ug/l | 6230. | 10/02/04 | AHM | 100. | | | |
| C9-C10 Aromatics | ug/l | 6790. | 10/02/04 | AHM | 100. | | | |
| Benzene | ug/l | 1.8 | 10/02/04 | AHM | 1.0 | | | |
| Ethyl Benzene | ug/l | 541. | 10/02/04 | AHM | 1.0 | | | |
| MTBE | ug/l | 24.5 | 10/02/04 | AHM | 1.0 | | | |
| Naphthalene | ug/l | 220. | 10/02/04 | AHM | 10.0 | | | |
| Toluene | ug/l | 2.2 | 10/02/04 | AHM | 1.0 | | | |
| m/p-Xylene | ug/l | 1670. | 10/02/04 | AHM | 2.0 | | | |
| o-Xylene | ug/l | 269. | 10/02/04 | AHM | 1.0 | | | |

Analytical Method:
MADEP-VPH-04-1.1
SAMPLES ARE CONCENTRATED BY PURGE AND TRAP, FOLLOWED BY GAS CHROMATOGRAPHY ANALYSIS WITH PID/FID DETECTION. SUMMED RANGES ARE REPORTED WITH TARGET COMPOUND CONTRIBUTIONS SUBTRACTED.
C9-C12 ALIPHATIC HYDROCARBONS EXCLUDE THE CONCENTRATION OF C9-C10 AROMATIC HYDROCARBONS.

NO SIGNIFICANT MODIFICATIONS WERE MADE TO THE METHOD.

DETAILS OF ANY NON-CONFORMANCE WITH QA/QC REQUIREMENTS, PERFOMANCE, OR ACCEPTANCE CRITERIA ARE LISTED IN THE NOTES SECTION OF THIS REPORT.

RL = Reporting Limit
ND = Not Detected
NM = Not Measured
* = See end of report for comments and notes applying to this sample

SPEC LIMIT = a client specified recommended or regulatory level for comparison with data to determine PASS (P) or FAIL (F) condition of results.

con-test®
ANALYTICAL LABORATORY
39 Spruce Street ° 2nd Floor ° East Longmeadow, MA 01028 ° FAX 413/525-6405 ° TEL. 413/525-2332

BETH CORREIRA
LINCOLN ENVIRONMENTAL, INC.
333 WASHINGTON HWY
SMITHFIELD, RI 02917

10/5/2004


Purchase Order No.:

Project Location: SUTTON
Date Received: 9/24/2004
**Field Sample # : MW-8**
**Sample ID : 04B30634**

Sampled : 9/23/2004
NOT SPECIFIED

Sample Matrix: GRND WATER

LIMS-BAT #: LIMS-82405
Job Number: RRR8069

| | Units | Results | Date Analyzed | Analyst | RL | SPEC Limit Lo | SPEC Limit Hi | P/ F |
|---|---|---|---|---|---|---|---|---|
| Unadjusted C5-C8 Aliphatics | ug/l | 2220. | 10/04/04 | AHM | 100. | | | |
| C5-C8 Aliphatics | ug/l | 2160. | 10/04/04 | AHM | 100. | | | |
| Unadjusted C9-C12 Aliphatics | ug/l | 18500. | 10/04/04 | AHM | 100. | | | |
| C9-C12 Aliphatics | ug/l | 7210. | 10/04/04 | AHM | 100. | | | |
| C9-C10 Aromatics | ug/l | 10600. | 10/04/04 | AHM | 100. | | | |
| Benzene | ug/l | 3.4 | 10/04/04 | AHM | 1.0 | | | |
| Ethyl Benzene | ug/l | 195. | 10/04/04 | AHM | 1.0 | | | |
| MTBE | ug/l | 45.5 | 10/04/04 | AHM | 1.0 | | | |
| Naphthalene | ug/l | 114. | 10/04/04 | AHM | 10.0 | | | |
| Toluene | ug/l | 4.6 | 10/04/04 | AHM | 1.0 | | | |
| m/p-Xylene | ug/l | 522. | 10/04/04 | AHM | 2.0 | | | |
| o-Xylene | ug/l | 57.9 | 10/04/04 | AHM | 1.0 | | | |

Analytical Method:
MADEP-VPH-04-1.1

SAMPLES ARE CONCENTRATED BY PURGE AND TRAP, FOLLOWED BY GAS CHROMATOGRAPHY ANALYSIS WITH PID/FID DETECTION. SUMMED RANGES ARE REPORTED WITH TARGET COMPOUND CONTRIBUTIONS SUBTRACTED.
C9-C12 ALIPHATIC HYDROCARBONS EXCLUDE THE CONCENTRATION OF C9-C10 AROMATIC HYDROCARBONS.

NO SIGNIFICANT MODIFICATIONS WERE MADE TO THE METHOD.

DETAILS OF ANY NON-CONFORMANCE WITH QA/QC REQUIREMENTS, PERFOMANCE, OR ACCEPTANCE CRITERIA ARE LISTED IN THE NOTES SECTION OF THIS REPORT.

RL = Reporting Limit
ND = Not Detected
NM = Not Measured
* = See end of report for comments and notes applying to this sample

SPEC LIMIT = a client specified recommended or regulatory level for comparison with data to determine PASS (P) or FAIL (F) condition of results.

con-test®
ANALYTICAL LABORATORY
39 Spruce Street ° 2nd Floor ° East Longmeadow, MA 01028 ° FAX 413/525-6405 ° TEL. 413/525-2332

BETH CORREIRA
LINCOLN ENVIRONMENTAL, INC.
333 WASHINGTON HWY
SMITHFIELD, RI 02917

10/5/2004


Purchase Order No.:

Project Location: SUTTON
Date Received: 9/24/2004

LIMS-BAT #: LIMS-82405
Job Number: RRR8069

** END OF REPORT **

RL = Reporting Limit
ND = Not Detected
NM = Not Measured
* = See end of report for comments and notes applying to this sample

SPEC LIMIT = a client specified recommended or regulatory level for comparison with data to determine PASS (P) or FAIL (F) condition of results.

con-test®
ANALYTICAL LABORATORY
39 Spruce Street ° 2nd Floor ° East Longmeadow, MA 01028 ° FAX 413/525-6405 ° TEL. 413/525-2332

## QC SUMMARY REPORT

SAMPLE QC: Sample Results with Duplicates
Sample Matrix Spikes and Matrix Spike Duplicates

BATCH QC: Lab fortified Blanks and Duplicates
Standard Reference Materials and Duplicates
Method Blanks

Report Date: 10/5/2004 Lims Bat # : LIMS-82405 

QC Batch Number: GC/FID-11767

| Sample Id | Analysis | QC Analysis | Values | Units | Limits |
|---|---|---|---|---|---|
| 04B30630 | | | | | |
| | 2,5-Dibromotoluene (FID) | Sur. Recovery FID/MS | 86.9 | % | 70-130 |
| 04B30631 | | | | | |
| | 2,5-Dibromotoluene (FID) | Sur. Recovery FID/MS | 98.6 | % | 70-130 |
| 04B30632 | | | | | |
| | 2,5-Dibromotoluene (FID) | Sur. Recovery FID/MS | 84.3 | % | 70-130 |
| 04B30633 | | | | | |
| | 2,5-Dibromotoluene (FID) | Sur. Recovery FID/MS | 95.3 | % | 70-130 |
| 04B30634 | | | | | |
| | 2,5-Dibromotoluene (FID) | Sur. Recovery FID/MS | 96.3 | % | 70-130 |
| BLANK-65004 | | | | | |
| | C5-C8 Aliphatics | Blank | <100. | ug/l | |
| | C9-C12 Aliphatics | Blank | <100. | ug/l | |
| | Unadjusted C5-C8 Aliphatics | Blank | <100. | ug/l | |
| | Unadjusted C9-C12 Aliphatics | Blank | <100. | ug/l | |
| LFBLANK-35814 | | | | | |
| | Nonane | Lab Fort Blank Amt. | 100.0 | ug/l | |
| | | Lab Fort Blk. Found | 87.8 | ug/l | |
| | | Lab Fort Blk. % Rec. | 87.8 | % | 30-130 |
| | | Dup Lab Fort Bl Amt. | 100.0 | ug/l | |
| | | Dup Lab Fort Bl. Fnd | 71.3 | ug/l | |
| | | Dup Lab Fort Bl %Rec | 71.3 | % | 30-130 |
| | | Lab Fort Blank Range | 16.5 | units | |
| | | Lab Fort Bl. Av. Rec | 79.6 | % | |
| | | LFB Duplicate RPD | 20.7 | % | 0-25 |
| | Pentane | Lab Fort Blank Amt. | 100.0 | ug/l | |
| | | Lab Fort Blk. Found | 88.3 | ug/l | |
| | | Lab Fort Blk. % Rec. | 88.3 | % | 70-130 |
| | | Dup Lab Fort Bl Amt. | 100.0 | ug/l | |
| | | Dup Lab Fort Bl. Fnd | 78.0 | ug/l | |
| | | Dup Lab Fort Bl %Rec | 78.0 | % | 70-130 |
| | | Lab Fort Blank Range | 10.2 | units | |
| | | Lab Fort Bl. Av. Rec | 83.1 | % | |
| | | LFB Duplicate RPD | 12.3 | % | 0-25 |
| | 2-Methylpentane | Lab Fort Blank Amt. | 100.0 | ug/l | |
| | | Lab Fort Blk. Found | 101.2 | ug/l | |
| | | Lab Fort Blk. % Rec. | 101.2 | % | 70-130 |
| | | Dup Lab Fort Bl Amt. | 100.0 | ug/l | |
| | | Dup Lab Fort Bl. Fnd | 87.8 | ug/l | |
| | | Dup Lab Fort Bl %Rec | 87.8 | % | 70-130 |
| | | Lab Fort Blank Range | 13.4 | units | |
| | | Lab Fort Bl. Av. Rec | 94.5 | % | |
| | | LFB Duplicate RPD | 14.2 | % | 0-25 |
| | 2,2,4-Trimethylpentane | Lab Fort Blank Amt. | 100.0 | ug/l | |

con-test®
ANALYTICAL LABORATORY
39 Spruce Street ° 2nd Floor ° East Longmeadow, MA 01028 ° FAX 413/525-6405 ° TEL. 413/525-2332

## QC SUMMARY REPORT

SAMPLE QC: Sample Results with Duplicates
Sample Matrix Spikes and Matrix Spike Duplicates

BATCH QC: Lab fortified Blanks and Duplicates
Standard Reference Materials and Duplicates
Method Blanks

Report Date: 10/5/2004 Lims Bat # : LIMS-82405 

QC Batch Number: GC/FID-11767

| Sample Id | Analysis | QC Analysis | Values | Units | Limits |
|---|---|---|---|---|---|
| LFBLANK-35814 | | | | | |
| | 2,2,4-Trimethylpentane | Lab Fort Blk. Found | 92.3 | ug/l | |
| | | Lab Fort Blk. % Rec. | 92.3 | % | 70-130 |
| | | Dup Lab Fort Bl Amt. | 100.0 | ug/l | |
| | | Dup Lab Fort Bl. Fnd | 76.7 | ug/l | |
| | | Dup Lab Fort Bl %Rec | 76.7 | % | 70-130 |
| | | Lab Fort Blank Range | 15.6 | units | |
| | | Lab Fort Bl. Av. Rec | 84.5 | % | |
| | | LFB Duplicate RPD | 18.4 | % | 0-25 |
| | n-Decane | Lab Fort Blank Amt. | 100.0 | ug/l | |
| | | Lab Fort Blk. Found | 85.5 | ug/l | |
| | | Lab Fort Blk. % Rec. | 85.5 | % | 70-130 |
| | | Dup Lab Fort Bl Amt. | 100.0 | ug/l | |
| | | Dup Lab Fort Bl. Fnd | 72.1 | ug/l | |
| | | Dup Lab Fort Bl %Rec | 72.1 | % | 70-130 |
| | | Lab Fort Blank Range | 13.4 | units | |
| | | Lab Fort Bl. Av. Rec | 78.8 | % | |
| | | LFB Duplicate RPD | 17.0 | % | 0-25 |
| | n-Butylcyclohexane | Lab Fort Blank Amt. | 100.0 | ug/l | |
| | | Lab Fort Blk. Found | 87.6 | ug/l | |
| | | Lab Fort Blk. % Rec. | 87.6 | % | 70-130 |
| | | Dup Lab Fort Bl Amt. | 100.0 | ug/l | |
| | | Dup Lab Fort Bl. Fnd | 75.5 | ug/l | |
| | | Dup Lab Fort Bl %Rec | 75.5 | % | 70-130 |
| | | Lab Fort Blank Range | 12.1 | units | |
| | | Lab Fort Bl. Av. Rec | 81.5 | % | |
| | | LFB Duplicate RPD | 14.8 | % | 0-25 |

con-test®
ANALYTICAL LABORATORY
39 Spruce Street ° 2nd Floor ° East Longmeadow, MA 01028 ° FAX 413/525-6405 ° TEL. 413/525-2332

## QC SUMMARY REPORT

SAMPLE QC: Sample Results with Duplicates
Sample Matrix Spikes and Matrix Spike Duplicates

BATCH QC: Lab fortified Blanks and Duplicates
Standard Reference Materials and Duplicates
Method Blanks

Report Date: 10/5/2004 Lims Bat # : LIMS-82405 

QC Batch Number: GC/PID-6676

| Sample Id | Analysis | QC Analysis | Values | Units | Limits |
|---|---|---|---|---|---|
| 04B30630 | | | | | |
| | 2,5-Dibromotoluene (PID) | Sur. Recovery (PID) | 98.0 | % | 70-130 |
| 04B30631 | | | | | |
| | 2,5-Dibromotoluene (PID) | Sur. Recovery (PID) | 112.7 | % | 70-130 |
| 04B30632 | | | | | |
| | 2,5-Dibromotoluene (PID) | Sur. Recovery (PID) | 91.6 | % | 70-130 |
| 04B30633 | | | | | |
| | 2,5-Dibromotoluene (PID) | Sur. Recovery (PID) | 107.8 | % | 70-130 |
| 04B30634 | | | | | |
| | 2,5-Dibromotoluene (PID) | Sur. Recovery (PID) | 111.1 | % | 70-130 |
| BLANK-65003 | | | | | |
| | Benzene | Blank | <1.0 | ug/l | |
| | Ethyl Benzene | Blank | <1.0 | ug/l | |
| | Naphthalene | Blank | <10.0 | ug/l | |
| | Toluene | Blank | <1.0 | ug/l | |
| | o-Xylene | Blank | <1.0 | ug/l | |
| | m/p-Xylene | Blank | <2.0 | ug/l | |
| | C9-C10 Aromatics | Blank | <100. | ug/l | |
| | MTBE | Blank | <1.0 | ug/l | |
| LFBLANK-35813 | | | | | |
| | Benzene | Lab Fort Blank Amt. | 100.0 | ug/l | |
| | | Lab Fort Blk. Found | 112.0 | ug/l | |
| | | Lab Fort Blk. % Rec. | 112.0 | % | 70-130 |
| | | Dup Lab Fort Bl Amt. | 100.0 | ug/l | |
| | | Dup Lab Fort Bl. Fnd | 110.0 | ug/l | |
| | | Dup Lab Fort Bl %Rec | 110.0 | % | 70-130 |
| | | Lab Fort Blank Range | 2.0 | units | |
| | | Lab Fort Bl. Av. Rec | 111.0 | % | |
| | | LFB Duplicate RPD | 1.8 | % | 0-25 |
| | Ethyl Benzene | Lab Fort Blank Amt. | 100.0 | ug/l | |
| | | Lab Fort Blk. Found | 114.8 | ug/l | |
| | | Lab Fort Blk. % Rec. | 114.8 | % | 70-130 |
| | | Dup Lab Fort Bl Amt. | 100.0 | ug/l | |
| | | Dup Lab Fort Bl. Fnd | 111.5 | ug/l | |
| | | Dup Lab Fort Bl %Rec | 111.5 | % | 70-130 |
| | | Lab Fort Blank Range | 3.3 | units | |
| | | Lab Fort Bl. Av. Rec | 113.2 | % | |
| | | LFB Duplicate RPD | 2.9 | % | 0-25 |
| | Naphthalene | Lab Fort Blank Amt. | 100.0 | ug/l | |
| | | Lab Fort Blk. Found | 99.1 | ug/l | |
| | | Lab Fort Blk. % Rec. | 99.1 | % | 70-130 |
| | | Dup Lab Fort Bl Amt. | 100.0 | ug/l | |
| | | Dup Lab Fort Bl. Fnd | 101.0 | ug/l | |
| | | Dup Lab Fort Bl %Rec | 101.0 | % | 70-130 |

con-test®
ANALYTICAL LABORATORY
39 Spruce Street ° 2nd Floor ° East Longmeadow, MA 01028 ° FAX 413/525-6405 ° TEL. 413/525-2332

## QC SUMMARY REPORT

SAMPLE QC: Sample Results with Duplicates
Sample Matrix Spikes and Matrix Spike Duplicates

BATCH QC: Lab fortified Blanks and Duplicates
Standard Reference Materials and Duplicates
Method Blanks

Report Date: 10/5/2004 Lims Bat # : LIMS-82405 

QC Batch Number: GC/PID-6676

| Sample Id | Analysis | QC Analysis | Values | Units | Limits |
|---|---|---|---|---|---|
| LFBLANK-35813 | | | | | |
| | Naphthalene | Lab Fort Blank Range | 2.0 | units | |
| | | Lab Fort Bl. Av. Rec | 100.1 | % | |
| | | LFB Duplicate RPD | 1.9 | % | 0-25 |
| | Toluene | Lab Fort Blank Amt. | 100.0 | ug/l | |
| | | Lab Fort Blk. Found | 115.0 | ug/l | |
| | | Lab Fort Blk. % Rec. | 115.0 | % | 70-130 |
| | | Dup Lab Fort Bl Amt. | 100.0 | ug/l | |
| | | Dup Lab Fort Bl. Fnd | 111.5 | ug/l | |
| | | Dup Lab Fort Bl %Rec | 111.5 | % | 70-130 |
| | | Lab Fort Blank Range | 3.5 | units | |
| | | Lab Fort Bl. Av. Rec | 113.2 | % | |
| | | LFB Duplicate RPD | 3.1 | % | 0-25 |
| | o-Xylene | Lab Fort Blank Amt. | 100.0 | ug/l | |
| | | Lab Fort Blk. Found | 118.0 | ug/l | |
| | | Lab Fort Blk. % Rec. | 118.0 | % | 70-130 |
| | | Dup Lab Fort Bl Amt. | 100.0 | ug/l | |
| | | Dup Lab Fort Bl. Fnd | 117.3 | ug/l | |
| | | Dup Lab Fort Bl %Rec | 117.3 | % | 70-130 |
| | | Lab Fort Blank Range | 0.7 | units | |
| | | Lab Fort Bl. Av. Rec | 117.6 | % | |
| | | LFB Duplicate RPD | 0.6 | % | 0-25 |
| | m/p-Xylene | Lab Fort Blank Amt. | 200.0 | ug/l | |
| | | Lab Fort Blk. Found | 230.2 | ug/l | |
| | | Lab Fort Blk. % Rec. | 115.1 | % | 70-130 |
| | | Dup Lab Fort Bl Amt. | 200.0 | ug/l | |
| | | Dup Lab Fort Bl. Fnd | 224.7 | ug/l | |
| | | Dup Lab Fort Bl %Rec | 112.4 | % | 70-130 |
| | | Lab Fort Blank Range | 2.7 | units | |
| | | Lab Fort Bl. Av. Rec | 113.7 | % | |
| | | LFB Duplicate RPD | 2.4 | % | 0-25 |
| | MTBE | Lab Fort Blank Amt. | 100.0 | ug/l | |
| | | Lab Fort Blk. Found | 111.2 | ug/l | |
| | | Lab Fort Blk. % Rec. | 111.2 | % | 70-130 |
| | | Dup Lab Fort Bl Amt. | 100.0 | ug/l | |
| | | Dup Lab Fort Bl. Fnd | 111.0 | ug/l | |
| | | Dup Lab Fort Bl %Rec | 111.0 | % | 70-130 |
| | | Lab Fort Blank Range | 0.2 | units | |
| | | Lab Fort Bl. Av. Rec | 111.1 | % | |
| | | LFB Duplicate RPD | 0.2 | % | 0-25 |
| | 1,2,4-Trimethylbenzene | Lab Fort Blank Amt. | 100.0 | ug/l | |
| | | Lab Fort Blk. Found | 105.7 | ug/l | |
| | | Lab Fort Blk. % Rec. | 105.7 | % | 70-130 |
| | | Dup Lab Fort Bl Amt. | 100.0 | ug/l | |

con-test®
ANALYTICAL LABORATORY

39 Spruce Street ° 2nd Floor ° East Longmeadow, MA 01028 ° FAX 413/525-6405 ° TEL. 413/525-2332

## QC SUMMARY REPORT

SAMPLE QC: Sample Results with Duplicates
Sample Matrix Spikes and Matrix Spike Duplicates

BATCH QC: Lab fortified Blanks and Duplicates
Standard Reference Materials and Duplicates
Method Blanks

Report Date: 10/5/2004 Lims Bat # : LIMS-82405 

QC Batch Number: GC/PID-6676

| Sample Id | Analysis | QC Analysis | Values | Units | Limits |
|---|---|---|---|---|---|
| LFBLANK-35813 | | | | | |
| | 1,2,4-Trimethylbenzene | Dup Lab Fort Bl. Fnd | 116.7 | ug/l | |
| | | Dup Lab Fort Bl %Rec | 116.7 | % | 70-130 |
| | | Lab Fort Blank Range | 11.0 | units | |
| | | Lab Fort Bl. Av. Rec | 111.2 | % | |
| | | LFB Duplicate RPD | 9.9 | % | 0-25 |

con-test®
ANALYTICAL LABORATORY
39 Spruce Street • 2nd Floor • East Longmeadow, MA 01028 • FAX 413/525-6405 • TEL. 413/525-2332

**QC SUMMARY REPORT**

SAMPLE QC: Sample Results with Duplicates
Sample Matrix Spikes and Matrix Spike Duplicates

BATCH QC: Lab fortified Blanks and Duplicates
Standard Reference Materials and Duplicates
Method Blanks



# QUALITY CONTROL DEFINITIONS AND ABBREVIATIONS

| | |
|---|---|
| QC BATCH NUMBER | This is the number assigned to all samples analyzed together that would be subject to comparison with a particular set of Quality Control Data. |
| LIMITS | Upper and Lower Control Limits for the QC ANALYSIS Reported. All values normally would fall within these statistically determined limits, unless there is an unusual circumstance that would be documented in a NOTE appearing on the last page of the QC SUMMARY REPORT. Not all QC results will have Limits defined. |
| Sample Amount | Amount of analyte found in a sample. |
| Blank | Method Blank that has been taken though all the steps of the analysis. |
| LFBLANK | Laboratory Fortified Blank (a control sample) |
| STDADD | Standard Added (a laboratory control sample) |
| Matrix Spk Amt Added | Amount of analyte spiked into a sample |
| MS Amt Measured | Amount of analyte found including amount that was spiked |
| Matrix Spike % Rec. | % Recovery of spiked amount in sample. |
| Duplicate Value | The result from the Duplicate analysis of the sample. |
| Duplicate RPD | The Relative Percent Difference between two Duplicate Analyses. |
| Surrogate Recovery | The % Recovery for non-environmental compounds (surrogates) spiked into samples to determine the performance of the analytical methods. |
| Sur. Recovery (ELCD) | Surrogate Recovery on the Electrolytic Conductivity Detector. |
| Sur. Recovery (PID) | Surrogate Recovery on the Photoionization Detector. |
| Standard Measured | Amount measured for a laboratory control sample |
| Standard Amt Added | Known value for a laboratory control sample |
| Standard % Recovery | % recovered for a laboratory control sample with a known value. |
| Lab Fort Blank Amt | Laboratory Fortified Blank Amount Added |
| Lab Fort Blk. Found | Laboratory Fortified Blank Amount Found |
| Lab Fort Blk % Rec | Laboratory Fortified Blank % Recovered |
| Dup Lab Fort Bl Amt | Duplicate Laboratory Fortified Blank Amount Added |
| Dup Lab Fort Bl Fnd | Duplicate Laboratory Fortified Blank Amount Found |
| Dup Lab Fort Bl % Rec | Duplicate Laboratory Fortified Blank % Recovery |
| Lab Fort Blank Range | Laboratory Fortified Blank Range (Absolute value of difference between recoveries for Lab Fortified Blank and Lab Fortified Blank Duplicate). |
| Lab Fort Bl. Av. Rec. | Laboratory Fortified Blank Average Recovery |
| Duplicate Sample Amt | Sample Value for Duplicate used with Matrix Spike Duplicate |
| MSD Amount Added | Matrix Spike Duplicate Amount Added (Spiked) |
| MSD Amt Measured | Matrix Spike Duplicate Amount Measured |
| MSD % Recovery | Matrix Spike Duplicate % Recovery |
| MSD Range | Absolute difference between Matrix Spike and Matrix Spike Duplicate Recoveries |

con-test® ANALYTICAL LABORATORY
Phone: 413-525-2332
Fax: 413-525-6405
Email: info@contestlabs.com
www.contestlabs.com

# CHAIN OF CUSTODY RECORD

Lim#82405

39 SPRUCE ST, 2ND FLOOR
EAST LONGMEADOW, MA 01028



Company Name: LINCOLN ENV INC.
Address: 333 WASHINGTON HIGHWAY
SMITHFIELD, R.I.
Attention: B. CORREIA
Project Location: SUTTON
Sampled By: R. GRIFFIN

Telephone: (401) 232-3353
Project # RRP 8069
Client PO #

**DATA DELIVERY (check one):**
☐ FAX ☐ EMAIL ☐ WEBSITE CLIENT
Fax #:
Email:
Format: ☐ EXCEL ☐ PDF ☐ GIS KEY

Proposal Provided? (For Billing purposes)
☐ yes _____ proposal date

**ANALYSIS REQUESTED**

| Field ID | Sample Description | Lab # 04B | Date Sampled Start Date/Time | Date Sampled Stop Date/Time | Comp-osite | Grab | *Matrix Code | VOA | | | | | | | | | | |
|---|---|---|---|---|---|---|---|---|---|---|---|---|---|---|---|---|---|---|
| | MW-2 | 30630 | 9-23-04 AM | | | ✓ | GW | ✓ | | | | | | | | | | |
| | MW-3 | 30631 | " | | | ✓ | " | ✓ | | | | | | | | | | |
| | MW-6 | 30632 | " | | | ✓ | " | ✓ | | | | | | | | | | |
| | MW-7 | 30633 | " | | | ✓ | " | ✓ | | | | | | | | | | |
| | MW-8 | 30634 | " | | | ✓ | " | ✓ | | | | | | | | | | |

# of containers
**Preservation
~Cont.Code

~Cont.Code:
A=amber glass
G=glass
P=plastic
ST=sterile
V=vial
S=summa can
T=Tedlar bag
O=Other

**Comments:**

| Relinquished by: (signature) | Date/Time: |
|---|---|
| Randy Griffin | 9-23-04 2:00 |
| Received by: (signature) | Date/Time: |
| [illegible] | 9-24-04 10:05 |
| Relinquished by: (signature) | Date/Time: |
| [illegible] | 9-24-04 1525 |
| Received by: (signature) | Date/Time: |
| [illegible] H.S.C | 9/24/4 1525 |

**Turnaround**
☐ 24 Hour*
☐ 48 Hour*
☐ 72 Hour*
☑ Std.
☐ Other**
_____ Date needed**
*Require lab approval.

**Detection Limit Requirements**
Regulations? _____
Data Enhancement Project? ☐ Y ☐ N
*(MA MCP sites only)*
Special Requirements or DL's: _____

***Matrix Code:**
GW= groundwater
WW= wastewater
DW= drinking water
A = air
S = soil/solid
SL = sludge
O = other_____

****Preservation Codes:**
I = Iced
X = Na hydroxide
H = HCL
T = Na thiosulfate
M = Methanol
N = Nitric Acid
S = Sulfuric Acid
B = Sodium bisulfate
O = Other_____

***Con-Test Laboratory is the ONLY independent laboratory in all of New England with both prestigious AIHA and NELAC Certifications!***

OCT 14 2004

# MADEP MCP ANALYTICAL METHOD REPORT CERTIFICATION FORM

| | |
|---|---|
| Laboratory Name: **CON-TEST Analytical Laboratory** | Project #: LIMS-82405 |
| Project Location: SUTTON | MADEP RTN[1]: |

This Form provides certifications for the following data set: [list Laboratory Sample ID Number(s)]

04830630-04830634

Sample Matrices: ☒ Groundwater ☐ Soil/Sediment ☐ Drinking Water ☐ Other: _____

| **MCP SW-846 Methods Used** | 8260B ( ) | 8151A ( ) | 8330 ( ) | 6010B ( ) | 7470A/1A ( ) |
|---|---|---|---|---|---|
| | 8270C ( ) | 8081A ( ) | VPH (X) | 6020 ( ) | 9014M[2] ( ) |
| As specified in MADEP Compendium of Analytical Methods. (check all that apply) | 8082 ( ) | 8021B ( ) | EPH ( ) | 7000 S[3] ( ) | 7196A ( ) |

1 List Release Tracking Number (RTN), if known
2 M – SW-846 Method 9014 or MADEP Physiologically Available Cyanide (PAC) Method
3 S – SW-846 Methods 7000 Series List individual method and analyte.

***An affirmative response to questions A, B, C and D is required for "Presumptive Certainty" status***

| | | |
|---|---|---|
| A | Were all samples received by the laboratory in a condition consistent with that described on the Chain-of-Custody documentation for the data set? | ☒ Yes ☐ No[1] |
| B | Were all QA/QC procedures required for the specified analytical method(s) included in this report followed, including the requirement to note and discuss in a narrative QC data that did not meet appropriate performance standards or guidelines? | ☒ Yes ☐ No[1] |
| C | Does the data included in this report meet all the analytical requirements for "Presumptive Certainty", as described in Section 2.0 (a), (b), (c) and (d) of the MADEP document CAM VII A, "Quality Assurance and Quality Control Guidelines for the Acquisition and Reporting of Analytical Data"? | ☒ Yes ☐ No[1] |
| D | ***VPH and EPH Methods only***: Was the VPH or EPH Method conducted without significant modifications (see Section 11.3 of respective Methods) | ☒ Yes ☐ No[1] |

***A response to questions E and F below is required for "Presumptive Certainty" status***

| | | |
|---|---|---|
| E | Were all analytical QC performance standards and recommendations for the specified methods achieved? | ☒ Yes ☐ No[1] |
| F | Were results for all analyte-list compounds/elements for the specified method(s) reported? | ☒ Yes ☐ No[1] |

[1] *All Negative responses must be addressed in an attached Environmental Laboratory case narrative.*

***I, the undersigned, attest under the pains and penalties of perjury that, based upon my personal inquiry of those responsible for obtaining the information, the material contained in this analytical report is, to the best of my knowledge and belief, accurate and complete.***

| | |
|---|---|
| **Signature:** Edward Denson | **Position: Technical Director** |
| **Printed Name: Edward Denson** | **Date:** 10/5/04 |