DC
MAG910140

CDM
One Cambridge Place, 50 Hampshire Street
Cambridge, Massachusetts 02139
tel: 617 452-6000
fax: 617 452-8000

October 21, 2005

United States Environmental Protection Agency
RCP-NOC Processing
Municipal Assistance Unit (CMU)
One Congress Street, Suite 1100
Boston, Massachusetts 02114-2023

Subject: Notice of Intent
Remediation General Permit
Former Exxon Service Station No. 3-5805
1425 Massachusetts Avenue
Boxborough, Massachusetts
Release Tracking Number 2-00026
NPDES Exclusion Reference #02-033

OCT 24 100

To Whom It May Concern:

On behalf of Exxon Mobil Corporation (ExxonMobil), Camp Dresser & McKee, Inc. is submitting this Notice of Intent for the Remediation General Permit for the Former Exxon Service Station No. 3-5805 located at 1425 Massachusetts Avenue in Boxborough, Massachusetts. ExxonMobil is currently operating a vacuum enhanced groundwater extraction remedial system located on the above property. This discharge is currently operating in accordance with 310 CMR 40.0000 and under National Pollution Discharge Elimination System Exclusion Reference #02-033.

If you have any further questions regarding this matter please contact the undersigned at (617) 452-6000.

Very truly yours,

Jonathan E. Welch, P.G.
Senior Project Manager
Camp Dresser & McKee Inc.

William R. Swanson, P.E., LSP
Vice President
Camp Dresser & McKee Inc.

cc: Ms. Diane Belliveau MADEP CERO - BWSC
Eric Errico, ExxonMobil
Marie Cannon, Boxborough Board of Health
File

\\Camsvr01\prv\ExxonMobil\Boxborough\Boxborough\Letters\Notice of Intent Rem General Permit 10 21 05.doc

Notice of Intent (NOI) for the Remediation General Permit No. MAG910000

1. General site information. Please provide the following information about the site:

a) Name of **facility/site**: Former Exxon Service Station No. 3-5805		**Facility/site** address:	
Location of **facility/site**: longitude: -71°32′26.1″ latitude: 42°29′10.4″	Facility SIC code(s): 5541	Street: 1425 Massachusetts Avenue	
b) Name of **facility/site owner:** VERC Enterprises, Inc.		Town: Boxborough	
Email address of owner: lvercollone@vercenterprises.com		State: MA	Zip: 01719 / County: Middlesex
Telephone no.of facility/site **owner**: (781) 934-7300 x122			
Fax no. of facility/site **owner**: Not known		**Owner** is (check one): 1. Federal____ 2. State/Tribal_____ 3. Private_X_4. other, if so, describe:	
Address of **owner** (if different from site):			
Street: 5 Chestnut Street (P.O. Box 2809)			
Town: Duxbury	State: MA	Zip: 02331	County: Plymouth
c) Legal name of **operator**: Exxon Mobil Corporation	**Operator** telephone no: (617) 381-2952		
	Operator fax no.: (617) 381-2911		**Operator** email: eric.w.errico@exxonmobil.com
Operator contact name and title: Eric Errico, Project Manager			
Address of **operator** (if different from owner):	Street: 52 Beacham Street		
Town: Everett	State: MA	Zip: 02149	County: Middlesex
d) Check "yes" or "no" for the following: 1. Has a prior NPDES permit exclusion been granted for the discharge? Yes_X_ No___, if "yes," number: 02-033 2. Has a prior NPDES application (Form 1 & 2C) ever been filed for the discharge? Yes___ No_X_, if "yes," date and tracking #: 3. Is the discharge a "new discharge"as defined by 40 CFR 122.2? Yes___ No_X 4. For sites in Massachusetts, is the discharge covered under the MA Contingency Plan (MCP) and exempt from state permitting? Yes_X_ No__			
e) Is site/facility subject to any State permitting or other action which is causing the generation of discharge? Yes_X_ No___ If "yes," please list: 1. site identification # assigned by the state of NH or MA: 2-00026		f) Is the site/facility covered by any other EPA permit, including: 1. multi-sector storm water general permit? Y___ N_X_, if Y, number: 2. phase I or II construction storm water general permit? Y___ N_X_, if Y, number:	

2. permit or license # assigned: Tier 1B Permit No. 10984; MHD Permit # 3-2001-0008 3. state agency contact information: name, location, and telephone number: MADEP Bureau of Waste Site Cleanup, Central Regional Office, 627 Main Street, Worcester, MA, (508) 792-7650; Massachusetts Highway Department, 10 Park Plaza, Suite 3170, Boston, MA, (617) 973-7800	3. individual NPDES permit? Y___ N_X_, if Y, number: 4. any other water quality related permit? Y_X_ N__, if Y, number: Massachusetts Highway Department NPDES Phase II Stormwater General Permit

2. Discharge information. Please provide information about the discharge, (attaching additional sheets as needed) including:

a) Describe the discharge activities for which the owner/applicant is seeking coverage: Coverage is sought for discharge related to operation of a vacuum enhanced groundwater extraction (VEGE) remediation system, performed in compliance with the MCP. The VEGE system extracts groundwater which is routed through an oil/water separator, bag filters, an air stripper, vapor and liquid granular activated carbon, and ion exchange vessels before its discharge to a Massachusetts Highway catch basin.		
b) Provide the following information about each discharge:	1) Number of discharge points: 1	2) What is the **maximum** and **average flow rate** of discharge (in cubic feet per second, ft3/s)? Max. flow 0.056 ft^3/s Average flow 0.0028 ft^3/s Is maximum flow a **design value**? Y_X_ N____ For average flow, include the units and appropriate notation if this value is a design value or estimate if not available.
3) Latitude and longitude of each discharge within 100 feet: pt.1:long. -71°32′23.6″lat.42°29′17.8″; pt.2: long._____ lat._____; pt.3: long._____ lat._____; pt.4:long._____ lat._____; pt.5: long._____ lat._____; pt.6:long._____ lat._____; pt.7: long._____ lat._____; pt.8:long._____ lat._____; etc.		
4) If hydrostatic testing, total volume of the discharge (gals):	5) Is the discharge intermittent_No_or seasonal_No_? Is discharge ongoing Yes _X_ No_____?	
c) Expected dates of discharge (mm/dd/yy): start_03/28/02__ end_10/01/15		
d) Please attach a line drawing or flow schematic showing water flow through the facility including: 1. sources of intake water, 2. contributing flow from the operation, 3. treatment units, and 4. discharge points and receiving waters(s). See attached Process & Instrumentation Diagram (4 sheets)		

3. Contaminant information. In order to complete this section, the applicant will need to take a minimum of one sample of the untreated water and have it analyzed for **all** of the parameters listed in Appendix III. Historical data, (i.e., data taken no more than 2 years prior to the effective date of the permit) may be used if obtained pursuant to: i. Massachusetts' regulations 310 CMR 40.0000, the Massachusetts Contingency Plan ("Chapter 21E"); ii. New Hampshire's Title 50 RSA 485-A: Water Pollution and Waste Disposal or Title 50 RSA 485-C: Groundwater Protection Act; or iii. an EPA permit exclusion letter issued pursuant to 40 CFR 122.3, provided the data was analyzed with test methods that meet the requirements of this permit. Otherwise, a new sample shall be taken and analyzed.

a) Based on the analysis of the sample(s) of the untreated influent, the applicant must check the box of the sub-categories that the potential discharge falls within.

Gasoline Only X	VOC Only	Primarily Metals	Urban Fill Sites	Contaminated Sumps	Mixed Contaminants	Aquifer Testing
Fuel Oils (and Other Oils) only	VOC with Other Contaminants	Petroleum with Other Contaminants	Listed Contaminated Sites	Contaminated Dredge Condensates	Hydrostatic Testing of Pipelines/Tanks	Well Development or Rehabilitation

b) Based on the analysis of the untreated influent, the applicant must indicate whether each listed chemical is **believed present** or **believed absent** in the potential discharge. Attach additional sheets as needed.

PARAMETER	**Believe Absent**	**Believe Present**	**# of Samples (1 min-imum)**	**Type of Sample (e.g., grab)**	**Analytical Method Used (method #)**	**Minimum Level (ML) of Test Method (ug/l)**	**Maximum daily value**		**Avg. daily value**	
							concentration (ug/l)	**mass (kg)**	**concentration (ug/l)**	**mass (kg)**
1. Total Suspended Solids		X	12	Grab	160.2	4000	45,000	6.13	14,583	0.099
2. Total Residual Chlorine	(1)									
3. Total Petroleum Hydrocarbons		X	12	Grab	418.1	600	1,400	0.19	396.7	0.003
4. Cyanide	(1)									
5. Benzene		X	12	Grab	624	0.50	28.7	0.004	6.52	0.00004
6. Toluene		X	12	Grab	624	1.0	111	0.015	31.8	0.0002
7. Ethylbenzene		X	12	Grab	624	1.0	362	0.049	57.4	0.0004
8. (m,p,o) Xylenes		X	12	Grab	624	1.0	621	0.085	191.5	0.001
9. Total BTEX[1]		X	12 sets	Grabs	624	3.5	1122.7	0.153	287.2	0.002

[1] BTEX = Sum of Benzene, Toluene, Ethylbenzene, total Xylenes.

PARAMETER	Believe Absent	Believe Present	# of Samples (1 min-imum)	Type of Sample (e.g., grab)	Analytical Method Used (method #)	Minimum Level (ML) of Test Method (ug/l)	Maximum daily value		Avg. daily value	
							concentration (ug/l)	mass (kg)	concentration (ug/l)	mass (kg)
10. Ethylene Dibromide [2] (1,2- Dibromo-methane)	X (2)		1	Grab	504	0.012	0.006	0.0000008	0.006	0.00000004
11. Methyl-tert-Butyl Ether (MtBE)		X	12	Grab	624	1.0	17,400	2.371	4223.7	0.029
12. tert-Butyl Alcohol (TBA)		X	1	Grab	SW846 8260B	100	551	0.075	551	0.004
13. tert-Amyl Methyl Ether (TAME)		X	1	Grab	SW846 8260B	2.0	2.3	0.0003	2.3	0.000016
14. Naphthalene	X (2)		1	Grab	625	5.0	2.5	0.0003	2.5	0.000017
15. Carbon Tetra-chloride	(1)									
16. 1,4 Dichlorobenzene	(1)									
17. 1,2 Dichlorobenzene	(1)									
18. 1,3 Dichlorobenzene	(1)									
19. 1,1 Dichloroethane	(1)									
20. 1,2 Dichloroethane	(1)									
21. 1,1 Dichloroethylene	(1)									
22. cis-1,2 Dichloro-ethylene	(1)									
23. Dichloromethane (Methylene Chloride)	(1)									
24. Tetrachloroethylene	(1)									

[2] EDB is a groundwater contaminant at fuel spill and pesticide application sites in New England.

PARAMETER	Believe Absent	Believe Present	# of Samples (1 min-imum)	Type of Sample (e.g., grab)	Analytical Method Used (method #)	Minimum Level (ML) of Test Method (ug/l)	Maximum daily value		Avg. daily Value	
							concentration (ug/l)	mass (kg)	concentration (ug/l)	mass (kg)
25. 1,1,1 Trichloroethane	(1)									
26. 1,1,2 Trichloroethane	(1)									
27. Trichloroethylene	(1)									
28. Vinyl Chloride	(1)									
29. Acetone	(1)									
30. 1,4 Dioxane	(1)									
31. Total Phenols	(1)									
32. Pentachlorophenol	(1)									
33. Total Phthalates [3] (Phthalate esthers)	(1)									
34. Bis (2-Ethylhexyl) Phthalate [Di-(ethylhexyl) Phthalate]	(1)									
35. Total Group I Polycyclic Aromatic Hydrocarbons (PAH)	(1)									
a. Benzo(a) Anthracene	(1)									
b. Benzo(a) Pyrene	(1)									
c. Benzo(b)Fluoranthene	(1)									
d. Benzo(k) Fluoranthene	(1)									
e. Chrysene	(1)									

[3] The sum of individual phthalate compounds.

PARAMETER	Believe Absent	Believe Present	# of Samples (1 min-imum)	Type of Sample (e.g., grab)	Analytical Method Used (method #)	Minimum Level (ML) of Test Method (ug/l)	Maximum daily value		Average daily value	
							concentration (ug/l)	mass (kg)	concentration (ug/l)	mass (kg)
f. Dibenzo(a,h) anthracene	(1)									
g. Indeno(1,2,3-cd) Pyrene	(1)									
36. Total Group II Polycyclic Aromatic Hydrocarbons (PAH)	(1)									
h. Acenaphthene	(1)									
i. Acenaphthylene	(1)									
j. Anthracene	(1)									
k. Benzo(ghi) Perylene	(1)									
l. Fluoranthene	(1)									
m. Fluorene	(1)									
n. Naphthalene-	(1)									
o. Phenanthrene	(1)									
p. Pyrene	(1)									
37. Total Polychlorinated Biphenyls (PCBs)	(1)									
38. Antimony	(1)									
39. Arsenic	(1)									
40. Cadmium	(1)									
41. Chromium III	(1)									
42. Chromium VI	(1)									

PARAMETER	Believe Absent	Believe Present	# of Samples (1 min-imum)	Type of Sample (e.g., grab)	Analytical Method Used (method #)	Minimum Level (ML) of Test Method (ug/l)	Maximum daily value		Avg. daily value	
							concentration (ug/l)	mass (kg)	concentration (ug/l)	mass (kg)
43. Copper	(1)									
44. Lead		X	13	Grab	SW846 6010B / 239.2	5.0 / 1.0	28.9	0.004	5.9	0.00004
45. Mercury	(1)									
46. Nickel	(1)									
47. Selenium	(1)									
48. Silver	(1)									
49. Zinc	(1)									
50. Iron		X	1	Grab	SW846 6010B	100	4180	0.57	4180	0.028
Other (describe):										

Footnotes: (1) Analysis for this parameter is not required for gasoline remediation sites in accordance with Part I.C. Table V of the RGP.
(2) Parameter not detected above the minimum level of test method. Half the minimum level is used in computing average daily values and compiling maximum daily values.

Notes: Data used (when more than one sample included) consists of data collected between 9/2004 and 10/2005. For undetected results among these data, half the minimum level is used in computing average daily values and compiling maximum daily values.
MLs listed represent the minimum detection limit of included results for a given analysis.

c) For discharges where **metals** are believed present, please fill out the following:

Step 1: Do any of the metals in the influent have a **reasonable potential** to exceed the effluent limits in Appendix III (i.e., the limits set at zero to five dilutions)? Y_X_N____	If yes, which metals? Lead, Iron
Step 2: For any metals which have **reasonable potential** to exceed the **Appendix III** limits, calculate the **dilution factor (DF)** using the formula in Part I.A.3.c) (step 2) of the NOI instructions or as determined by the State prior to the submission of this NOI. What is the dilution factor for applicable metals? Metals: Lead, Iron DF: 1.4	Look up the limit calculated at the corresponding dilution factor in **Appendix IV.** Do any of the metals in the **influent** have the potential to exceed the corresponding **effluent** limits in Appendix IV (i.e., is the influent concentration above the limit set at the calculated dilution factor)? Y_X_N____ If "Yes," list which metals: Lead, Iron

4. Treatment system information. Please describe the treatment system using separate sheets as necessary, including:

a) A description of the treatment system, including a schematic of the proposed or existing treatment system:						
b) Identify each applicable treatment unit (check all that apply):	Frac. tank	Air stripper X	Oil/water separator X	Equalization tanks	Bag filter X	GAC filter X
	Chlorination	Dechlorination	Other (please describe): Ion exchange vessels			
c) Proposed **average** and **maximum flow rates** (gallons per minute) for the discharge and the **design flow rate**(s) (gallons per minute) of the treatment system: Average flow rate of discharge 1.25 gpm Maximum flow rate of treatment system 25 gpm Design flow rate of treatment system 25 gpm						
d) A description of chemical additives being used or planned to be used (attach MSDS sheets):						

5. Receiving surface water(s). Please provide information about the receiving water(s), using separate sheets as necessary:

a) Identify the discharge pathway:	Direct____	Within facility__	Storm drain X	River/brook X	Wetlands X	Other (describe):
b) Provide a narrative description of the discharge pathway, including the name(s) of the receiving waters: Upon entering the Massachusetts Highway catch basin, the treatment system discharge flows beneath Massachusetts Avenue to a storm drain. The water then flows beneath Adams Place to another storm drain. From there, the discharge flows toward a concrete headwall. Upon reaching the headwall, the water flows to an above-ground drainage swale which runs along Massachusetts Avenue until its discharge to a culvert which crosses beneath Massachusetts Avenue. Upon reaching the other side of Massachusetts Avenue, the discharge flows into a wetland area and eventually discharges into Beaver Brook.						
c) Attach a detailed map(s) indicating the site location and location of the outfall to the receiving water: 1. For multiple discharges, number the discharges sequentially. 2. For indirect dischargers, indicate the location of the discharge to the indirect conveyance and the discharge to surface water The map should also include the location and distance to the nearest sanitary sewer as well as the locus of nearby sensitive receptors (based on USGS topographical mapping), such as surface waters, drinking water supplies, and wetland areas. See attached Location Map.						
d) Provide the state water quality classification of the receiving water Class B, Warm Water						
e) Provide the reported or calculated seven day-ten year low flow (7Q10) of the receiving water 0.02 cfs Please attach any calculation sheets used to support stream flow and dilution calculations.						
f) Is the receiving water a listed 303(d) water quality impaired or limited water? Yes____ No X If yes, for which pollutant(s)? Is there a TMDL? Yes____ No X If yes, for which pollutant(s)? See 7. Supplemental Information						

6. Results of Consultation with Federal Services: Please provide the following information according to requirements of Part I.B.4 and Appendices II and VII.

a) Are any listed threatened or endangered species, or designated critical habitat, in proximity to the discharge? Yes____No_X
Has any consultation with the federal services been completed ? Yes___ No_X_ or is consultation underway? Yes ____ No_X_ See 7. Supplemental Information
What were the results of the consultation with the U.S. Fish and Wildlife Service and/or National Marine Fisheries Service (check one):
a "no jeopardy" opinion? _____or written concurrence____ on a finding that the discharges are not likely to adversely affect any endangered species or critical habitat?

b) Are any historic properties listed or eligible for listing on the National Register of Historic Places located on the facility or site or in proximity to the discharge?
Yes_____ No_X_Have any state or tribal historic preservation officer been consulted in this determination (Massachusetts only)? Yes_____ No_X_See 7. Supplemental Information

7. Supplemental information. :

Please provide any supplemental information. Attach any analytical data used to support the application. Attach any certification(s) required by the general permit.

5. f) Uses have not been assessed for Beaver Brook immediately downstream of the facility. Beginning approximately 4 miles downstream, Beaver Brook is impaired by nutrients, pH, organic enrichment/low DO, pathogens, and suspended solids. There is a draft TMDL for pathogens. Source: *Proposed Massachusetts Year 2004 Integrated List of Waters.*

6. a) According to the website of the Massachusetts Natural Heritage and Endangered Species Program, no species protected by the federal Endangered Species Act occur in Boxborough or Harvard and no critical habitats are designated in those towns.

6. b) No sites on the National Register of Historic Places are located within one mile of the facility or discharge location.

8. Signature Requirements: The Notice of Intent must be signed by the operator in accordance with the signatory requirements of 40 CFR Section 122.22, including the following certification:

I certify under penalty of law that this document and all attachments were prepared under my direction or supervision in accordance with a system designed to assure that qualified personnel properly gather and evaluate the information submitted. Based on my inquiry of the person or persons who manage the system, or those persons directly responsible for gathering the information, I certify that the information submitted is, to the best of my knowledge and belief, true, accurate, and complete. I certify that I am aware that there are significant penalties for submitting false information, including the possibility of fine and imprisonment for knowing violations.

Facility/Site Name: Former Exxon Service Station No. 3-5805, Boxborough, Massachusetts (NPDES Permit Exclusion Reference # 02-033)

Operator signature:

Title: Project Manager

Date: 10-18-05

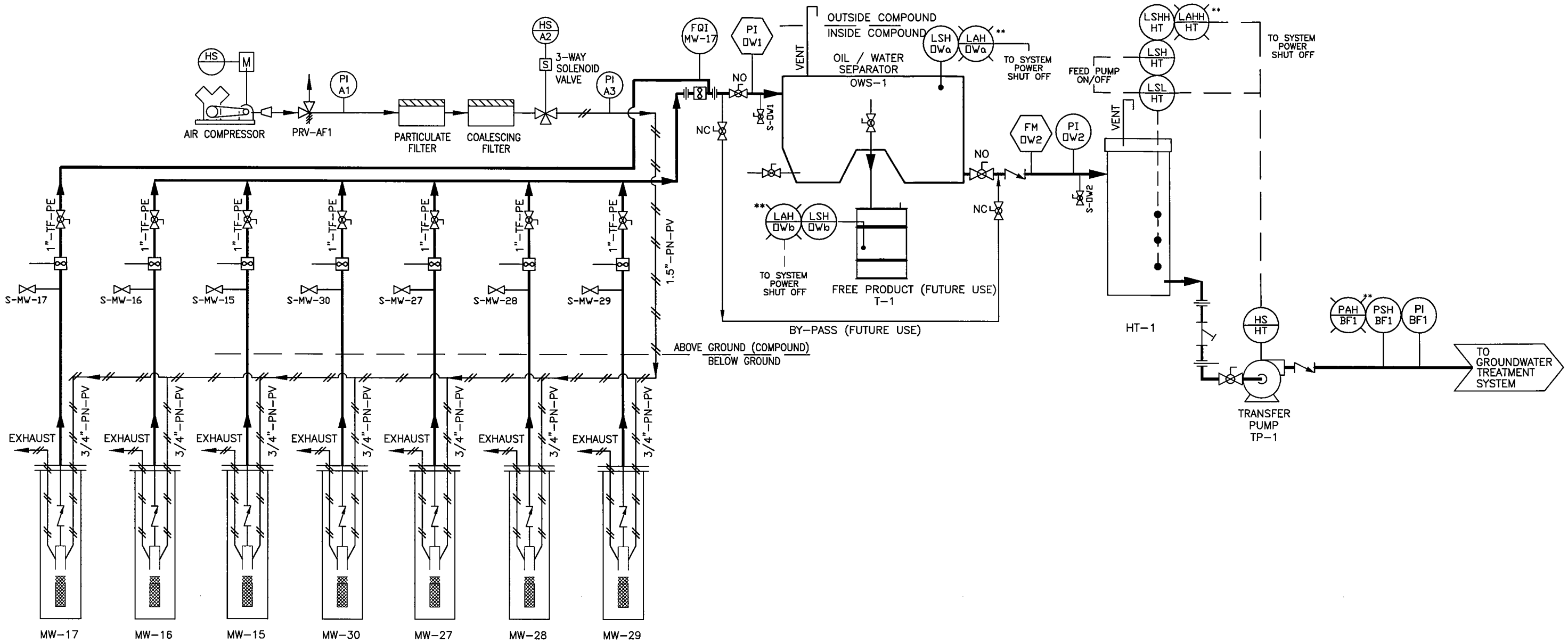

** CRITICAL DEVICE – SEE CRITICAL DEVICE CHECKLIST FOR DEVICE DESCRIPTION AND INSPECTION PROCEDURE

NOTE:

FIGURE GENERATED BY GROUNDWATER & ENVIROMENTAL SERVICES INC.

NOT TO SCALE

P:\20474\32302\3-5805\FIG9-3E.DWG

CDM

FORMER EXXON SERVICE STATION #3-5805
1425 MASSACHUSETTS AVENUE (ROUTE 111)
BOXBOROUGH, MASSACHUSETTS

NOTICE OF INTENT FOR REMEDIATION GENERAL PERMIT

PROCESS & INSTRUMENTATION DIAGRAM GROUNDWATER RECOVERY SYSTEM

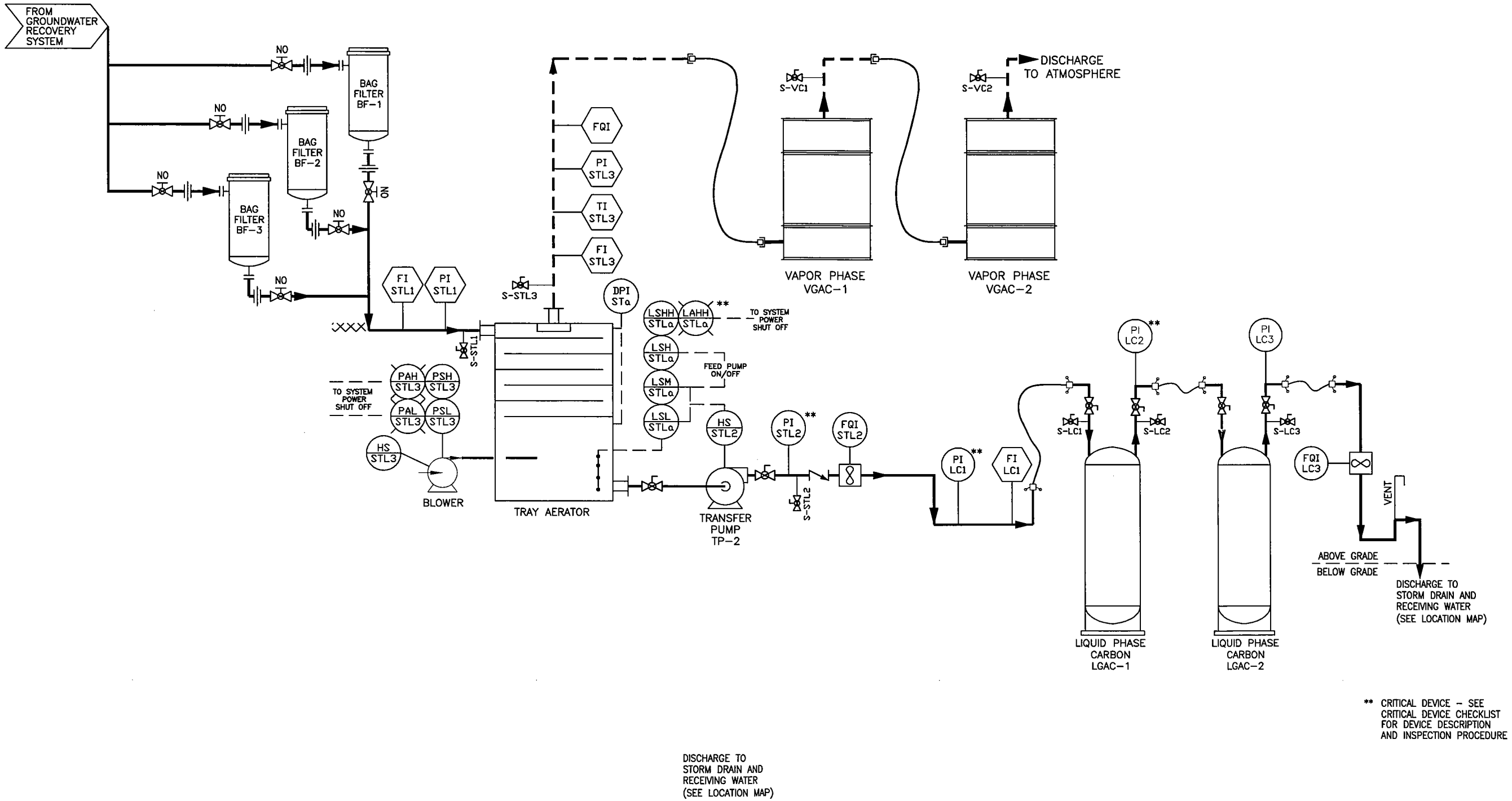

** CRITICAL DEVICE – SEE CRITICAL DEVICE CHECKLIST FOR DEVICE DESCRIPTION AND INSPECTION PROCEDURE

NOTE:

FIGURE GENERATED BY GROUNDWATER & ENVIROMENTAL SERVICES INC.

NOT TO SCALE

P:\20474\32302\3-5805\FIG9-2F.DWG

CDM

FORMER EXXON SERVICE STATION #3-5805
1425 MASSACHUSETTS AVENUE (ROUTE 111)
BOXBOROUGH, MASSACHUSETTS

NOTICE OF INTENT FOR REMEDIATION GENERAL PERMIT

PROCESS & INSTRUMENTATION DIAGRAM GROUNDWATER TREATMENT SYSTEM

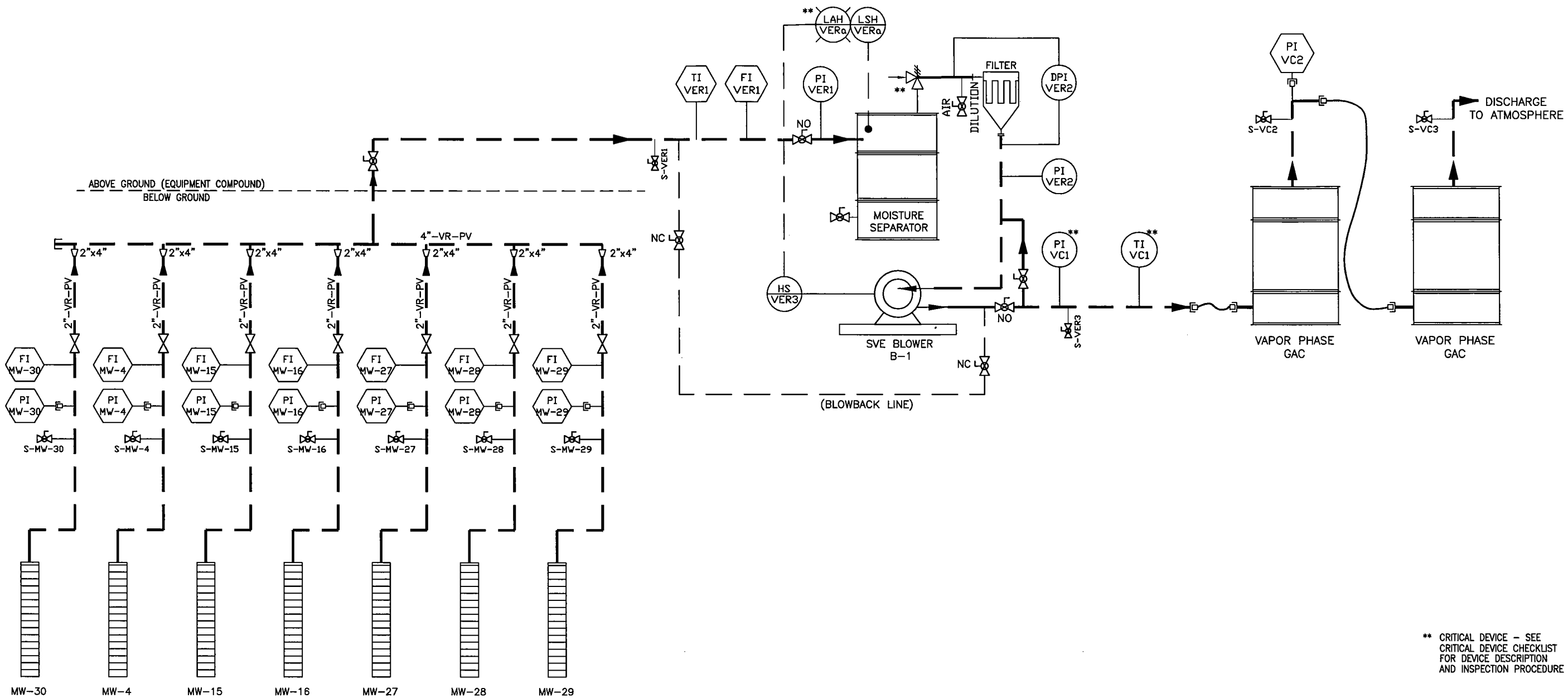

** CRITICAL DEVICE – SEE CRITICAL DEVICE CHECKLIST FOR DEVICE DESCRIPTION AND INSPECTION PROCEDURE

NOTE:

FIGURE GENERATED BY
GROUNDWATER & ENVIROMENTAL SERVICES INC.

FORMER EXXON SERVICE STATION #3-5805
1425 MASSACHUSETTS AVENUE (ROUTE 111)
BOXBOROUGH, MASSACHUSETTS

NOTICE OF INTENT FOR REMEDIATION GENERAL PERMIT

PROCESS & INSTRUMENTATION DIAGRAM
VAPOR RECOVERY & TREATMENT SYSTEM

CDM

P:\20474\32302\3-5805\FIG9-1D.DWG

SYMBOL SPECIFICATION

INSTRUMENTATION:

INSTRUMENT TYPE → PI
SYSTEM DESIGNATION → VE1 ← SYSTEM POSITION NUMBER

REFERENCE POINT FOR DESIGN ONLY NOT ACTUAL INSTALLED INSTRUMENT. OPTIONAL FIELD MOUNTED INSTRUMENT TO BE INSTALLED AT THIS LOCATION IF CHOSEN.

LOCAL MOUNTED INSTRUMENT

INSTRUMENTS WITH INPUTS OR OUTPUTS AT THE SITE CONTROL PANEL

PILOT LIGHT OR ALARM INDICATOR

SYSTEM DESIGNATION:

ASW	AIR SPARGE WELL & MANIFOLD
VEW	VAPOR EXTRACTION WELL & MANIFOLD
DPW	DUAL PHASE WELL & MANIFOLD
ERW	ELECTRIC RECOVERY WELL & PUMP
PRW	PNEUMATIC RECOVERY WELL & PUMP
VER	VAPOR EXTRACTION REGENERATIVE BLOWER
VEP	VAPOR EXTRACTION POSITIVE DISPLACEMENT
ASV	AIR SPARGE ROTARY VANE COMPRESSOR
ASB	AIR SPARGE POSITIVE DISPLACEMENT BLOWER
DPO	DUAL PHASE SEALED LIQUID RING PUMP
DPL	DUAL PHASE LIQUID RING PUMP
DPB	DUAL PHASE POSITIVE DISPLACEMENT BLOWER
OW	OIL– WATER SEPARATOR SYSTEM
STL	AIR STRIPPER LOW PROFILE
VC	VAPOR PHASE CARBON
LC	LIQUID PHASE CARBON

INSTRUMENT TYPE/DESIGNATION:

PI	PRESSURE INDICATOR
PS	PRESSURE SWITCH
PSH	PRESSURE SWITCH HIGH
PSL	PRESSURE SWITCH LOW
DPS	DIFFERENTIAL PRESSURE SWITCH
DPI	DIFFERENTIAL PRESSURE INDICATOR
PC	PRESSURE CONTROL
PAH	PRESSURE ALARM HIGH
PAL	PRESSURE ALARM LOW
FI	FLOW INDICATOR
FM	FLOW METER
FQI	FLOW METER (TOTALIZING)
FS	FLOW SWITCH
TI	TEMPERATURE INDICATOR
TSH	TEMPERATURE SWITCH HIGH
TSL	TEMPERATURE SWITCH LOW
TT	TEMPERATURE TRANSDUCER
TAH	TEMPERATURE ALARM HIGH
TAL	TEMPERATURE ALARM LOW
LSLL	LEVEL SWITCH LOW LOW
LSL	LEVEL SWITCH LOW
LSM	LEVEL SWITCH MIDRANGE
LSH	LEVEL SWITCH HIGH
LSHH	LEVEL SWITCH HIGH HIGH
LAL	LEVEL ALARM LOW
LAH	LEVEL ALARM HIGH
CS	CAPACITIVE SENSOR
S	SAMPLE PORT
KC	CYCLE COUNTER/TIMER
KP	PUMP RUN TIMER

EQUIPMENT

BAG FILTER

LIQUID RING PUMP

CENTRIFUGAL PUMP

ROTARY VANE COMPRESSOR

DISPLACEMENT PUMP

PRODUCT DRUM

AIR FILTER

POSITIVE DISPLACEMENT BLOWER

BLOWER

PACKED COLUMN AIR STRIPPING TOWER

VAPOR PHASE CARBON

LIQUID PHASE CARBON FRP

LIQUID PHASE CARBON (STEEL)

MOISTURE SEPARATOR

LOW PROFILE AIR STRIPPER

MAKEUP WATER SOURCE

LIQUID RING PUMP HOLDING TANK

PISTON COMPRESSOR

WELL WITH PUMP

SKIMMER PUMP

DIAPHRAM PUMP

PROPORTIONING PUMP

CENTRIFUGAL BLOWER PUMP

HEAT EXCHANGER/ CONDENSER

HEATER

SILENCER

OIL WATER SEPARATOR

LEVEL SWITCH FLOATS

INSTRUMENTATION & CONTROLS

LINE DESIGNATION:

2 – VR – 01 – PV

SIZE IN INCHES – PROCESS – LINE NUMBER – MATERIAL SPECIFICATION

PROCESS LINE INDICATORS

FLOW DIRECTION

MAJOR PROCESS

MINOR PROCESS

WATER/AIR PIPING

AIR PIPING

INSTRUMENTATION CONTROLS

PNEUMATIC LINE

CONNECTING LINE

CROSSOVER LINE

PROCESS LINE ABBREVATIONS

ES	– ELECTRIC SUPPLY
GS	– GAS SUPPLY
HS	– HYDRAULIC SUPPLY
NS	– NITROGEN SUPPLY
SS	– STEAM SUPPLY
W	– WATER SUPPLY
V	– VACUUM
VR	– VAPOR REMOVAL
TF	– TOTAL FLUIDS
AP	– ACCESS PIPE / CONDUIT
SA	– SPARGE AIR
PN	– PNEUMATIC SUPPLY

MATERIAL SPECIFICATON:

PV	– POLYVINYL CHLORIDE
GM	– GALVANIZED
RC	– RIGID COPPER
IR	– IRON
ABS	– ACRYLONITRILE BUTADENE STYRENE
FL	– FLEX

ELECTRICAL SYMBOLS

ELECTRICALLY OPERATED SOLENOID

SEALOFF

120 V RECEPTACLE – WEATHER PROOF

JUNCTION BOX

MAGNETIC MOTOR STARTER

THERMAL OVERLOAD SWITCHES

LAMP

LIMIT SWITCH

LEVEL SWITCH

PRESSURE SWITCH

TEMPERATURE SWITCH

SOLENOID

CONTROL RELAY

OR THERMOSTAT

CONTROL VALVE BODIES

BALL VALVE

GATE VALVE

GLOBE VALVE

BUTTERFLY VALVE

SWING CHECK VALVE

DIAPHRAGM VALVE

BALL CHECK VALVE

NEEDLE VALVE

3 WAY VALVE

4 WAY VALVE

FOOT VALVE

VALVE ABBREVIATIONS

N.C. – NORMALLY CLOSED

N.O. – NORMALLY OPEN

MAN – MANUAL

P:\20474\32302\3-5805\FIG9-1E.DWG

CDM

FORMER EXXON SERVICE STATION #3-5805
1425 MASSACHUSETTS AVENUE (ROUTE 111)
BOXBOROUGH, MASSACHUSETTS

NOTICE OF INTENT FOR REMEDIATION GENERAL PERMIT

PROCESS & INSTRUMENTATION DIAGRAM LEGEND

New England
ACCUTEST
Laboratories

02/02/05

Technical Report for

Exxon Service Station

CDM:S/S 3-5805 1425 Massachusetts Ave., Boxborough, MA

PO#4504183520 WBS#08

Accutest Job Number: M42082

Sampling Date: 09/23/04

Report to:

Camp, Dresser & McKee

HimmelDB@cdm.com

ATTN: Dana Himmel

Total number of pages in report: 27

ACCREDITED IN ACCORDANCE WITH nelac

Test results contained within this data package meet the requirements of the National Environmental Laboratory Accreditation Conference and/or state specific certification programs as applicable.

Reza Tand
Lab Director

Certifications: MA (M-MA136) CT (PH-0109) NH (250204) RI (00071) ME (MA136) FL (E87579) NY (23346) NJ (MA926) NAVY USACE

This report shall not be reproduced, except in its entirety, without the written approval of Accutest Laboratories.

Table of Contents

-1-

Sections: 1 2 3 4 5 6

Section 1: Sample Summary 3
Section 2: Sample Results 4
2.1: M42082-1: EFF-GW-9-23-04 4
2.2: M42082-2: INF-GW-9-23-04 7
2.3: M42082-3: MW17-9-23-04 10
Section 3: Misc. Forms 11
3.1: Chain of Custody 12
3.2: Sample Tracking Chronicle 13
Section 4: GC/MS Volatiles - QC Data Summaries 14
4.1: Method Blank Summary 15
4.2: Blank Spike/Blank Spike Duplicate Summary 16
4.3: Matrix Spike/Matrix Spike Duplicate Summary 17
4.4: Surrogate Recovery Summaries 18
Section 5: Metals Analysis - QC Data Summaries 19
5.1: Prep QC MP6103: Pb 20
Section 6: General Chemistry - QC Data Summaries 24
6.1: Method Blank and Spike Results Summary 25
6.2: Duplicate Results Summary 26
6.3: Matrix Spike Results Summary 27

Sample Summary

Exxon Service Station

Job No: M42082

CDM:S/S 3-5805 1425 Massachusetts Ave., Boxborough, MA
Project No: PO#4504183520 WBS#08

Sample Number	Collected Date	Time By	Received	Matrix Code	Matrix Type	Client Sample ID
M42082-1	09/23/04	15:30 AP	09/24/04	AQ	Effluent	EFF-GW-9-23-04
M42082-2	09/23/04	16:30 AP	09/24/04	AQ	Influent	INF-GW-9-23-04
M42082-3	09/23/04	16:20 AP	09/24/04	AQ	Ground Water	MW17-9-23-04

Report of Analysis

Client Sample ID:	INF-GW-9-23-04		
Lab Sample ID:	M42082-2	Date Sampled:	09/23/04
Matrix:	AQ - Influent	Date Received:	09/24/04
Method:	EPA 624	Percent Solids:	n/a
Project:	CDM:S/S 3-5805 1425 Massachusetts Ave., Boxborough, MA		

	File ID	DF	Analyzed	By	Prep Date	Prep Batch	Analytical Batch
Run #1	A48255.D	1	09/28/04	AMY	n/a	n/a	MSA1604
Run #2							

	Purge Volume
Run #1	5.0 ml
Run #2	

Purgeable Aromatics, MTBE

CAS No.	Compound	Result	RL	Units	Q
71-43-2	Benzene	ND	0.50	ug/l	
108-88-3	Toluene	ND	1.0	ug/l	
100-41-4	Ethylbenzene	ND	1.0	ug/l	
1330-20-7	Xylenes (total)	ND	1.0	ug/l	
1634-04-4	Methyl Tert Butyl Ether	12.8	1.0	ug/l	

CAS No.	Surrogate Recoveries	Run# 1	Run# 2	Limits
17060-07-0	1,2-Dichloroethane-D4 (SUR)	115%		80-127%
2037-26-5	Toluene-D8 (SUR)	101%		85-114%
460-00-4	4-Bromofluorobenzene (SUR)	90%		85-114%

ND = Not detected
RL = Reporting Limit
E = Indicates value exceeds calibration range

J = Indicates an estimated value
B = Indicates analyte found in associated method blank
N = Indicates presumptive evidence of a compound

Accutest LabLink@47713 10:15 02-Feb-2005

Report of Analysis

Client Sample ID:	INF-GW-9-23-04		
Lab Sample ID:	M42082-2	Date Sampled:	09/23/04
Matrix:	AQ - Influent	Date Received:	09/24/04
		Percent Solids:	n/a
Project:	CDM:S/S 3-5805 1425 Massachusetts Ave., Boxborough, MA		

Metals Analysis

Analyte	Result	RL	Units	DF	Prep	Analyzed	By	Method	Prep Method
Lead	< 5.0	5.0	ug/l	1	09/27/04	09/27/04	LMN	SW846 6010B [1]	SW846 3010A [2]

(1) Instrument QC Batch: MA5110
(2) Prep QC Batch: MP6103

RL = Reporting Limit

Report of Analysis

Client Sample ID:	INF-GW-9-23-04		
Lab Sample ID:	M42082-2	Date Sampled:	09/23/04
Matrix:	AQ - Influent	Date Received:	09/24/04
		Percent Solids:	n/a
Project:	CDM:S/S 3-5805 1425 Massachusetts Ave., Boxborough, MA		

General Chemistry

Analyte	Result	RL	Units	DF	Analyzed	By	Method
Color, Apparent	50	5	CU	1	09/24/04 18:40	MA	EPA 110.2
Petroleum Hydrocarbons	<0.61	0.61	mg/l	1	09/27/04	BF	EPA 418.1
Solids, Settleable	<0.10	0.10	ml/l/hr	1	09/25/04 08:05	MA	EPA 160.5
Solids, Total Suspended	25.0	4.0	mg/l	1	09/28/04	BF	EPA 160.2
Turbidity	15.6	0.50	NTU	1	09/24/04 18:59	MA	EPA 180.1

RL = Reporting Limit

Misc. Forms

Custody Documents and Other Forms

Includes the following where applicable:

- Chain of Custody
- Sample Tracking Chronicle

ACCUTEST Laboratories

CHAIN OF CUSTODY

495 Tech Center West, Bldg. 1
Marlboro, MA 01752
508-481-6200 FAX: 508-481-6200

1 of 1

Accutest Job #: M42082

Client Information | **Facility Information** | **Analytical Information**

EXXONMOBIL CORPORATION - Regional Laboratory Program Northeast

Consultants Company Name: CDM
Address: 50 Hampshire Street
City: Cambridge State: MA Zip: 02139
Project Contact: Jan Welch
Sampler's Name: Andrew Powers
Phone #: 617-452-6000 Ext. Fax #:
APE #:

Project Name: XOM - Barbara
Street: 1425 Mass Ave
City: Barbara State: MA
ExxonMobil Contact: Eric Ferrico
ExxonMobil Contact Phone #:
Location ID#: 3-5805 WBS#:
PO#: Line#:

Accutest Sample #	Field ID / Point of Collection	Collection Date	Collection Time	Sampled by	Matrix	# of bottles	Preservation: HCL	NaOH	HNO3	H2SO4	MEOH	Encore	Other	None	BTEX 8260 ☐ 624 ☐ 8021 ☐ 524 ☐ MTBE ☐ TBA ☐ Naphthalene ☐ Oxygenates ☐	VOC AQUEOUS 8260 ☐ 624 ☐ 524 ☐ STD ☐ TCL ☐ PPL ☐ MTBE ☐ TBA ☐ Oxygenates ☐	VOC SOIL 8260 ☐ STD ☐ TCL ☐ PPL ☐ MTBE ☐ TBA ☐ Oxygenates ☐ 5035/LOW ☐ 5035/MED ☐	VPH RANGES ☐ TARGETS ☐	EPH RANGES ☐ TARGET (PAH) ☐ DIESEL (PAH) ☐	TPH-CTEP ☐ TPH-418.1 ☐	TPH-MAINE GRO ☐ DRO ☐	TPH-8015 GRO ☐ TPH-8015 DRO ☐	METALS TOTAL ☐ DISSOLVED ☐ HMS ☐ HMS ☐	METALS TCLP ☐ SPLP ☐ HMS ☐ HMS ☐	Total Lead	TSS/Color/Turbidity	Total Settleable Solids
M42082-1	EFF-GW-9-23-04	9/23/04	1530	AP	GW	9	X		X					X	X						X				X	X	X
-2	INF-GW-9-23-04	9/23/04	1630	AP	GW	9	X		X					X	X						X				X	X	X
-3	MW17-9-23-04	9/23/04	1620	AP	GW	2	X								X												

Turnaround Time (Business days)

- ☐ Std. 10 Business Days — Approved By/Date
- ☐ 8 Day RUSH
- ☒ 5 Day RUSH [redacted]
- ☐ 3 Day *EMERGENCY*
- ☐ 2 Day *EMERGENCY*
- ☐ 1 Day *EMERGENCY*

Emergency T/A is for FAX or Lablink Data

Data Deliverable Information

- ☐ Commercial "A"
- ☐ Commercial "B"
- ☐ Full Deliverables
- ☒ Other MCP Presumptive Certainty
- ☐ FULL CLP
- ☐ State Forms
- ☐ Disk Deliverable Format _____

Site Specific: QC Yes ☐ No ☐ If yes, indicate QC sample in Comments and submit triplicate volume.

Comments / Remarks

Note: Accelerated Turn Around Time
- Presumptive Certainty

Loc. 4E, 5E, 10C, 2F4, 2F2

Sample Custody must be documented below each time samples change possession, including courier delivery.

Relinquished by Sampler:	Date Time:	Received by:	Relinquished by:	Date Time:	Received by:
1 [signature]	9/23/04	1 [signature]	2 [signature]	9/24/04 16:40	2 [signature]
Relinquished by: 3 [signature]	Date Time: 9/23/04 18:30	Received by: 3 [signature]	Relinquished by: 4	Date Time:	Received by: 4
Relinquished by: 5	Date Time:	Received by: 5	Seal #	Preserved where applicable ☐	On Ice ☒ Temp. 1.7°C

M42082: Chain of Custody
Page 1 of 1

3.2

3

Internal Sample Tracking Chronicle

Exxon Service Station

Job No: M42082

CDM:S/S 3-5805 1425 Massachusetts Ave., Boxborough, MA
Project No: PO#4504183520 WBS#08

Sample Number	Method	Analyzed	By	Prepped	By	Test Codes
M42082-1 Collected: 23-SEP-04 15:30 By: AP Received: 24-SEP-04 By: RS EFF-GW-9-23-04						
M42082-1	EPA 110.2	24-SEP-04 18:40	MA			COL
M42082-1	EPA 180.1	24-SEP-04 18:59	MA			TURB
M42082-1	EPA 160.5	25-SEP-04 08:05	MA			SS
M42082-1	EPA 418.1	27-SEP-04	BF	27-SEP-04	BF	PHC
M42082-1	SW846 6010B	27-SEP-04 21:59	LMN	27-SEP-04	OP	PB
M42082-1	EPA 624	27-SEP-04 23:07	AMY			V624BTXM
M42082-1	EPA 160.2	28-SEP-04	BF			TSS
M42082-2 Collected: 23-SEP-04 16:30 By: AP Received: 24-SEP-04 By: RS INF-GW-9-23-04						
M42082-2	EPA 110.2	24-SEP-04 18:40	MA			COL
M42082-2	EPA 180.1	24-SEP-04 18:59	MA			TURB
M42082-2	EPA 160.5	25-SEP-04 08:05	MA			SS
M42082-2	EPA 418.1	27-SEP-04	BF	27-SEP-04	BF	PHC
M42082-2	SW846 6010B	27-SEP-04 22:04	LMN	27-SEP-04	OP	PB
M42082-2	EPA 160.2	28-SEP-04	BF			TSS
M42082-2	EPA 624	28-SEP-04 02:59	AMY			V624BTXM
M42082-3 Collected: 23-SEP-04 16:20 By: AP Received: 24-SEP-04 By: RS MW17-9-23-04						
M42082-3	EPA 624	27-SEP-04 23:45	AMY			V624BTXM

Method Blank Summary

Job Number: M42082
Account: EXXONSS Exxon Service Station
Project: CDM:S/S 3-5805 1425 Massachusetts Ave., Boxborough, MA

Sample	File ID	DF	Analyzed	By	Prep Date	Prep Batch	Analytical Batch
MSA1604-MB	A48237.D	1	09/27/04	AMY	n/a	n/a	MSA1604

The QC reported here applies to the following samples: Method: EPA 624

M42082-1, M42082-2, M42082-3

CAS No.	Compound	Result	RL	Units	Q
71-43-2	Benzene	ND	0.50	ug/l	
100-41-4	Ethylbenzene	ND	1.0	ug/l	
1634-04-4	Methyl Tert Butyl Ether	ND	1.0	ug/l	
108-88-3	Toluene	ND	1.0	ug/l	
1330-20-7	Xylenes (total)	ND	1.0	ug/l	

CAS No.	Surrogate Recoveries		Limits
17060-07-0	1,2-Dichloroethane-D4 (SUR)	112%	80-127%
2037-26-5	Toluene-D8 (SUR)	99%	85-114%
460-00-4	4-Bromofluorobenzene (SUR)	94%	85-114%

Blank Spike/Blank Spike Duplicate Summary

Job Number: M42082
Account: EXXONSS Exxon Service Station
Project: CDM:S/S 3-5805 1425 Massachusetts Ave., Boxborough, MA

Sample	File ID	DF	Analyzed	By	Prep Date	Prep Batch	Analytical Batch
MSA1604-BS	A48234.D	1	09/27/04	AMY	n/a	n/a	MSA1604
MSA1604-BSD	A48235.D	1	09/27/04	AMY	n/a	n/a	MSA1604

The QC reported here applies to the following samples: Method: EPA 624

M42082-1, M42082-2, M42082-3

CAS No.	Compound	Spike ug/l	BSP ug/l	BSP %	BSD ug/l	BSD %	RPD	Limits Rec/RPD
71-43-2	Benzene	20	24.7	124	22.4	112	10	37-151/30
100-41-4	Ethylbenzene	20	22.5	113	20.9	105	7	37-162/30
1634-04-4	Methyl Tert Butyl Ether	20	25.7	129	25.6	128	0	62-147/30
108-88-3	Toluene	20	23.0	115	21.7	109	6	47-150/30
1330-20-7	Xylenes (total)	60	64.6	108	63.8	106	1	73-139/30

CAS No.	Surrogate Recoveries	BSP	BSD	Limits
17060-07-0	1,2-Dichloroethane-D4 (SUR)	115%	113%	80-127%
2037-26-5	Toluene-D8 (SUR)	97%	99%	85-114%
460-00-4	4-Bromofluorobenzene (SUR)	105%	107%	85-114%

Matrix Spike/Matrix Spike Duplicate Summary

Job Number: M42082
Account: EXXONSS Exxon Service Station
Project: CDM:S/S 3-5805 1425 Massachusetts Ave., Boxborough, MA

Sample	File ID	DF	Analyzed	By	Prep Date	Prep Batch	Analytical Batch
M42088-1MS	A48243.D	5	09/27/04	AMY	n/a	n/a	MSA1604
M42088-1MSD	A48244.D	5	09/27/04	AMY	n/a	n/a	MSA1604
M42088-1	A48242.D	1	09/27/04	AMY	n/a	n/a	MSA1604

The QC reported here applies to the following samples: Method: EPA 624

M42082-1, M42082-2, M42082-3

CAS No.	Compound	M42088-1 ug/l	Q	Spike ug/l	MS ug/l	MS %	MSD ug/l	MSD %	RPD	Limits Rec/RPD
71-43-2	Benzene	ND		100	136	136	129	129	5	37-151/30
100-41-4	Ethylbenzene	ND		100	130	130	126	126	3	37-162/30
1634-04-4	Methyl Tert Butyl Ether	ND		100	128	128	122	122	5	48-150/39
108-88-3	Toluene	ND		100	130	130	129	129	1	47-150/30
1330-20-7	Xylenes (total)	ND		300	357	119	304	101	16	66-144/38

CAS No.	Surrogate Recoveries	MS	MSD	M42088-1	Limits
17060-07-0	1,2-Dichloroethane-D4 (SUR)	114%	99%	110%	80-127%
2037-26-5	Toluene-D8 (SUR)	101%	103%	97%	85-114%
460-00-4	4-Bromofluorobenzene (SUR)	107%	105%	99%	85-114%

Volatile Surrogate Recovery Summary

Job Number: M42082
Account: EXXONSS Exxon Service Station
Project: CDM:S/S 3-5805 1425 Massachusetts Ave., Boxborough, MA

Method: EPA 624 Matrix: AQ

Samples and QC shown here apply to the above method

Lab Sample ID	Lab File ID	S1	S2	S3
M42082-1	A48249.D	114.0	102.0	100.0
M42082-2	A48255.D	115.0	101.0	90.0
M42082-3	A48250.D	106.0	96.0	98.0
M42088-1MS	A48243.D	114.0	101.0	107.0
M42088-1MSD	A48244.D	99.0	103.0	105.0
MSA1604-BS	A48234.D	115.0	97.0	105.0
MSA1604-BSD	A48235.D	113.0	99.0	107.0
MSA1604-MB	A48237.D	112.0	99.0	94.0

Surrogate Compounds	Recovery Limits
S1 = 1,2-Dichloroethane-D4 (SUR)	80-127%
S2 = Toluene-D8 (SUR)	85-114%
S3 = 4-Bromofluorobenzene (SUR)	85-114%

Metals Analysis

5

QC Data Summaries

Includes the following where applicable:

- Method Blank Summaries
- Matrix Spike and Duplicate Summaries
- Blank Spike and Lab Control Sample Summaries
- Serial Dilution Summaries

MATRIX SPIKE AND DUPLICATE RESULTS SUMMARY

Login Number: M42082
Account: EXXONSS - Exxon Service Station
Project: CDM:S/S 3-5805 1425 Massachusetts Ave., Boxborough, MA

QC Batch ID: MP6103
Matrix Type: AQUEOUS

Methods: SW846 6010B
Units: ug/l

Prep Date:			09/27/04					09/27/04	
Metal	M42003-5A Original MS		Spikelot MPIRWS2	% Rec	QC Limits	M42003-5A Original DUP		RPD	QC Limits
Aluminum									
Antimony									
Arsenic	anr								
Barium	anr								
Beryllium									
Boron									
Cadmium	anr								
Calcium									
Chromium	anr								
Cobalt									
Copper									
Iron	anr								
Lead	0.0	991	1000	99.1	75-125	0.0	0.0	NC	0-20
Magnesium									
Manganese	anr								
Molybdenum									
Nickel									
Potassium									
Selenium	anr								
Silver	anr								
Sodium									
Strontium									
Thallium									
Tin									
Titanium									
Vanadium									
Zinc									

Associated samples MP6103: M42082-1, M42082-2

Results < IDL are shown as zero for calculation purposes
(*) Outside of QC limits
(N) Matrix Spike Rec. outside of QC limits
(anr) Analyte not requested

SERIAL DILUTION RESULTS SUMMARY

Login Number: M42082
Account: EXXONSS - Exxon Service Station
Project: CDM:S/S 3-5805 1425 Massachusetts Ave., Boxborough, MA

QC Batch ID: MP6103
Matrix Type: AQUEOUS

Methods: SW846 6010B
Units: ug/l

Prep Date: 09/27/04

Metal	M42003-5A Original	SDL 1:5	RPD	QC Limits
Aluminum				
Antimony				
Arsenic	anr			
Barium	anr			
Beryllium				
Boron				
Cadmium	anr			
Calcium				
Chromium	anr			
Cobalt				
Copper				
Iron	anr			
Lead	0.00	0.00	NC	0-10
Magnesium				
Manganese	anr			
Molybdenum				
Nickel				
Potassium				
Selenium	anr			
Silver	anr			
Sodium				
Strontium				
Thallium				
Tin				
Titanium				
Vanadium				
Zinc				

Associated samples MP6103: M42082-1, M42082-2

Results < IDL are shown as zero for calculation purposes
(*) Outside of QC limits
(anr) Analyte not requested

General Chemistry

6

QC Data Summaries

Includes the following where applicable:

- Method Blank and Blank Spike Summaries
- Duplicate Summaries
- Matrix Spike Summaries

METHOD BLANK AND SPIKE RESULTS SUMMARY
GENERAL CHEMISTRY

Login Number: M42082
Account: EXXONSS - Exxon Service Station
Project: CDM:S/S 3-5805 1425 Massachusetts Ave., Boxborough, MA

Analyte	Batch ID	RL	MB Result	Units	Spike Amount	BSP Result	BSP %Recov	QC Limits
Color, Apparent	GN14876	5	<5	CU				
Petroleum Hydrocarbons	GP4854/GN14888	0.60	<0.60	mg/l	5	4.6	92.0	80-120%
Solids, Settleable	GN14878	0.10	<0.10	ml/l/hr				
Solids, Total Suspended	GN14899	4.0	<4.0	mg/l				
Turbidity	GN14875	0.50	<0.50	NTU				

Associated Samples:
Batch GN14875: M42082-1, M42082-2
Batch GN14876: M42082-1, M42082-2
Batch GN14878: M42082-1, M42082-2
Batch GN14899: M42082-1, M42082-2
Batch GP4854: M42082-1, M42082-2

6.1 6

DUPLICATE RESULTS SUMMARY
GENERAL CHEMISTRY

Login Number: M42082
Account: EXXONSS - Exxon Service Station
Project: CDM:S/S 3-5805 1425 Massachusetts Ave., Boxborough, MA

Analyte	Batch ID	QC Sample	Units	Original Result	DUP Result	RPD	QC Limits
Color, Apparent	GN14876	M42082-1	CU	<5	<5	0.0	0-20%
Petroleum Hydrocarbons	GP4854/GN14888	M41964-1	mg/l	<0.61	<0.61	0.0	0-20%
Solids, Settleable	GN14878	M42082-2	ml/l/hr	<0.10	<0.10	0.0	0-20%
Solids, Total Suspended	GN14899	M42082-1	mg/l	<4.0	<4.0	0.0	0-20%
Turbidity	GN14875	M42082-1	NTU	<0.50	<0.50	0.0	0-20%

Associated Samples:
Batch GN14875: M42082-1, M42082-2
Batch GN14876: M42082-1, M42082-2
Batch GN14878: M42082-1, M42082-2
Batch GN14899: M42082-1, M42082-2
Batch GP4854: M42082-1, M42082-2

6.2 6

MATRIX SPIKE RESULTS SUMMARY
GENERAL CHEMISTRY

Login Number: M42082
Account: EXXONSS - Exxon Service Station
Project: CDM:S/S 3-5805 1425 Massachusetts Ave., Boxborough, MA

Analyte	Batch ID	QC Sample	Units	Original Result	Spike Amount	MS Result	%Rec	QC Limits
Petroleum Hydrocarbons	GP4854/GN14888	M41963-2	mg/l	<0.61	5.1	4.7	92.2	75-125%

Associated Samples:
Batch GP4854: M42082-1, M42082-2

6.3 6

New England
ACCUTEST.
Laboratories

11/08/04

Technical Report for

Exxon Service Station

CDM:S/S 3-5805 1425 Massachusetts Ave., Boxborough, MA

PO#4504183520 WBS#08

Accutest Job Number: M42587

Sampling Date: 10/20/04

Report to:

Camp Dresser & McKee
50 Hampshire Avenue
Cambridge, MA 02139

ATTN: Andrew Powers

Total number of pages in report: 25

ACCREDITED IN ACCORDANCE WITH nelac

Test results contained within this data package meet the requirements of the National Environmental Laboratory Accreditation Conference and/or state specific certification programs as applicable.

Reza Tand
Lab Director

Certifications: MA (M-MA136) CT (PH-0109) NH (250204) RI (00071) ME (MA136) FL (E87579) NY (23346) NJ (MA926) NAVY USACE

This report shall not be reproduced, except in its entirety, without the written approval of Accutest Laboratories.

ACCUTEST Laboratories

SAMPLE DELIVERY GROUP CASE NARRATIVE

Client: Exxon Service Station **Job No:** M42587

Site: CDM:S/S 3-5805 1425 Massachusetts Ave., Boxborough, MA **Report Date** 11/8/2004 4:26:38 PM

6 Samples were collected on 10/20/2004 and were received at Accutest on 10/20/2004 properly preserved, at 16.7 Deg. C and intact. These Samples received an Accutest job number of M42587. A listing of the Laboratory Sample ID, Client Sample ID and dates of collection are presented in the Results Summary Section of this report.

Except as noted below, all method specified calibrations and quality control performance criteria were met for this job. For more information, please refer to QC summary pages.

Volatiles by GCMS By Method EPA 624

Matrix: AQ **Batch ID:** MSA1631

- All samples were analyzed within the recommended method holding time.
- Sample(s) M42587-6MS, M42587-6MSD were used as the QC samples indicated.
- All method blanks for this batch meet method specific criteria.

Only BTX and MTBE requested.

Wet Chemistry By Method EPA 160.2

Matrix: AQ **Batch ID:** GN15109

- All samples were analyzed within the recommended method holding time.
- All method blanks for this batch meet method specific criteria.
- Sample(s) M42589-11DUP were used as the QC samples for Solids, Total Suspended.

Wet Chemistry By Method EPA 418.1

Matrix: AQ **Batch ID:** GP4957

- All samples were distilled within the recommended method holding time.
- All samples were analyzed within the recommended method holding time.
- All method blanks for this batch meet method specific criteria.
- Sample(s) M42587-1DUP, M42587-2MS were used as the QC samples for Petroleum Hydrocarbons.

The Accutest Laboratories of New England certifies that all analysis were performed within method specification. It is further recommended that this report to be used in its entirety.The Accutest Laboratories of NE, Laboratory Director or assignee as verified by the signature on the cover page has authorized the release of this report(M42587).

Title: MADEP MCP Response Action Analytical Report Certification Form

MADEP MCP Analytical Method Report Certification Form

Laboratory Name:	Accutest Laboratories of New England	Project #:	M42587
Project Location:	CDM:S/S 3-5805 1425 Massachusetts Ave., Boxborough, MA	MADEP RTN [1]	None

This form provides certifications for the following data set:
M42587-1 through M42587-6

Test Method: EPA 624, 160.2, 418.1

Sample Matrices: Groundwater Soil/Sediment ( ) Drinking Water ( ) Other: (x) ( )

MCP SW-846 Methods Used					
	8260B ( )	8151A ( )	8330 ( )	6010B ( )	7470A/1A ( )
	8270C ( )	8081A ( )	VPH ( )	6020 ( )	9014M [2] ( )
As specified in MADEP Compendium of Analytical Methods (Check all that apply)	8082 ( )	8021B ( )	EPH ( )	7000 S [3] ( )	7196A ( )

1 List Release Tracking Number (RTN) if known
2 M - SW-846 Method 9014 or MADEP Physiologically Available Cyanide (PAC) Method
3 S - SW-846 Methods 7000 Series. List individual method and analyte

An affirmative response to questions A, B, C, and D is required for "Presumptive Certainty status

A	Were all samples received by the laboratory in a condition consistent with that described on the Chain-of-Custody documentation for the data set?	☑	Yes	☐ No [1]
B	Were all QA/QC procedures required for the specified analytical method(s) included in this report followed, including the requirement to note and discuss in a narrative QC data that did not meet appropriate performance standards or guidelines?	☑	Yes	☐ No [1]
C	Does the data included in this report meet all the analytical requirements for "Presumptive Certainty", as described in Section 2.0 (a), (b), (c) and (d) of the MADEP document CAM VII A, "Quality Assurance and Quality Control Guidelines for the Acquisition and Reporting of Analytical Data"?	☑	Yes	☐ No [1]
D	**VPH and EPH methods only:** Was the VPH or EPH method run without significant modifications, as specified in Section 11.3?	☑	Yes	☐ No [1]

A response to questions E and F below is required for "Presumptive Certainty" status

E	Were all QC performance standards and recommendations for the specified methods achieved?	☑ Refer to Narrative	Yes	☐ No [1]
F	Were results for all analyte-list compounds/elements for the specified method(s) reported?	☐ Refer to Narrative	Yes	☑ No [1]

[1] ***All Negative responses must be addressed in an attached Environmental Laboratory case narrative.***

I the undersigned, attest under the pains and penalties of perjury that, based upon my personal inquiry of those responsible for obtaining the information, the material contained in this analytical report is, to the best of my knowledge and belief, accurate and complete.

Signature:		**Position:**	**Laboratory Director**
Printed Name:	**Reza Tand**	**Date:**	**11/07/2004**

Sample Summary

Exxon Service Station

Job No: M42587

CDM:S/S 3-5805 1425 Massachusetts Ave., Boxborough, MA
Project No: PO#4504183520 WBS#08

Sample Number	Collected Date	Time By	Received	Matrix Code	Type	Client Sample ID
M42587-1	10/20/04	10:30 RMB	10/20/04	AQ	Influent	GW INF
M42587-2	10/20/04	10:40 RMB	10/20/04	AQ	Effluent	GW EFF
M42587-3	10/20/04	10:50 RMB	10/20/04	AQ	Effluent1	GW GAC 1 EFF
M42587-4	10/20/04	11:00 RMB	10/20/04	AQ	Effluent2	GW GAC 2 EFF
M42587-5	10/20/04	11:10 RMB	10/20/04	AQ	Influent	GW AS INF
M42587-6	10/20/04	11:20 RMB	10/20/04	AQ	Effluent	GW AS EFF

Accutest Laboratories

Report of Analysis

Client Sample ID:	GW INF		
Lab Sample ID:	M42587-1	**Date Sampled:**	10/20/04
Matrix:	AQ - Influent	**Date Received:**	10/20/04
Method:	EPA 624	**Percent Solids:**	n/a
Project:	CDM:S/S 3-5805 1425 Massachusetts Ave., Boxborough, MA		

	File ID	DF	Analyzed	By	Prep Date	Prep Batch	Analytical Batch
Run #1	A48982.D	1	10/29/04	AMY	n/a	n/a	MSA1631
Run #2	A48992.D	100	10/30/04	AMY	n/a	n/a	MSA1631

	Purge Volume
Run #1	5.0 ml
Run #2	5.0 ml

Purgeable Aromatics, MTBE

CAS No.	Compound	Result	RL	Units	Q
71-43-2	Benzene	1.6	0.50	ug/l	
108-88-3	Toluene	80.9	1.0	ug/l	
100-41-4	Ethylbenzene	35.5	1.0	ug/l	
1330-20-7	Xylenes (total)	300	1.0	ug/l	
1634-04-4	Methyl Tert Butyl Ether	17400 [a]	100	ug/l	

CAS No.	Surrogate Recoveries	Run# 1	Run# 2	Limits
17060-07-0	1,2-Dichloroethane-D4 (SUR)	121%	127%	80-127%
2037-26-5	Toluene-D8 (SUR)	99%	99%	85-114%
460-00-4	4-Bromofluorobenzene (SUR)	108%	101%	85-114%

(a) Result is from Run# 2

ND = Not detected
RL = Reporting Limit
E = Indicates value exceeds calibration range

J = Indicates an estimated value
B = Indicates analyte found in associated method blank
N = Indicates presumptive evidence of a compound

Accutest Laboratories

Report of Analysis

Client Sample ID:	GW INF		
Lab Sample ID:	M42587-1	**Date Sampled:**	10/20/04
Matrix:	AQ - Influent	**Date Received:**	10/20/04
		Percent Solids:	n/a
Project:	CDM:S/S 3-5805 1425 Massachusetts Ave., Boxborough, MA		

General Chemistry

Analyte	Result	RL	Units	DF	Analyzed	By	Method
Petroleum Hydrocarbons	<0.60	0.60	mg/l	1	10/27/04	BF	EPA 418.1
Solids, Total Suspended	8.0	4.0	mg/l	1	10/25/04	BF	EPA 160.2

RL = Reporting Limit

GC/MS Volatiles

QC Data Summaries

Includes the following where applicable:

- Method Blank Summaries
- Blank Spike Summaries
- Matrix Spike and Duplicate Summaries
- Surrogate Recovery Summaries

Method Blank Summary

Job Number: M42587
Account: EXXONSS Exxon Service Station
Project: CDM:S/S 3-5805 1425 Massachusetts Ave., Boxborough, MA

Sample	File ID	DF	Analyzed	By	Prep Date	Prep Batch	Analytical Batch
MSA1631-MB	A48969.D	1	10/29/04	AMY	n/a	n/a	MSA1631

The QC reported here applies to the following samples: **Method:** EPA 624

M42587-1, M42587-2, M42587-3, M42587-4, M42587-5, M42587-6

CAS No.	Compound	Result	RL	Units	Q
71-43-2	Benzene	ND	0.50	ug/l	
100-41-4	Ethylbenzene	ND	1.0	ug/l	
1634-04-4	Methyl Tert Butyl Ether	ND	1.0	ug/l	
108-88-3	Toluene	ND	1.0	ug/l	
1330-20-7	Xylenes (total)	ND	1.0	ug/l	

CAS No.	Surrogate Recoveries		Limits
17060-07-0	1,2-Dichloroethane-D4 (SUR)	121%	80-127%
2037-26-5	Toluene-D8 (SUR)	93%	85-114%
460-00-4	4-Bromofluorobenzene (SUR)	110%	85-114%

Blank Spike/Blank Spike Duplicate Summary

Job Number: M42587
Account: EXXONSS Exxon Service Station
Project: CDM:S/S 3-5805 1425 Massachusetts Ave., Boxborough, MA

Sample	File ID	DF	Analyzed	By	Prep Date	Prep Batch	Analytical Batch
MSA1631-BS	A48967.D	1	10/29/04	AMY	n/a	n/a	MSA1631
MSA1631-BSD	A48968.D	1	10/29/04	AMY	n/a	n/a	MSA1631

The QC reported here applies to the following samples: **Method:** EPA 624

M42587-1, M42587-2, M42587-3, M42587-4, M42587-5, M42587-6

CAS No.	Compound	Spike ug/l	BSP ug/l	BSP %	BSD ug/l	BSD %	RPD	Limits Rec/RPD
71-43-2	Benzene	20	20.1	101	21.5	108	7	37-151/30
100-41-4	Ethylbenzene	20	19.1	96	19.7	99	3	37-162/30
1634-04-4	Methyl Tert Butyl Ether	20	27.8	139	24.7	124	12	62-147/30
108-88-3	Toluene	20	22.5	113	21.6	108	4	47-150/30
1330-20-7	Xylenes (total)	60	59.1	99	63.2	105	7	73-139/30

CAS No.	Surrogate Recoveries	BSP	BSD	Limits
17060-07-0	1,2-Dichloroethane-D4 (SUR)	121%	119%	80-127%
2037-26-5	Toluene-D8 (SUR)	97%	94%	85-114%
460-00-4	4-Bromofluorobenzene (SUR)	101%	102%	85-114%

Matrix Spike/Matrix Spike Duplicate Summary

Job Number: M42587
Account: EXXONSS Exxon Service Station
Project: CDM:S/S 3-5805 1425 Massachusetts Ave., Boxborough, MA

Sample	File ID	DF	Analyzed	By	Prep Date	Prep Batch	Analytical Batch
M42587-6MS	A48976.D	5	10/29/04	AMY	n/a	n/a	MSA1631
M42587-6MSD	A48977.D	5	10/29/04	AMY	n/a	n/a	MSA1631
M42587-6	A48975.D	1	10/29/04	AMY	n/a	n/a	MSA1631

The QC reported here applies to the following samples: **Method:** EPA 624

M42587-1, M42587-2, M42587-3, M42587-4, M42587-5, M42587-6

CAS No.	Compound	M42587-6 ug/l	Q	Spike ug/l	MS ug/l	MS %	MSD ug/l	MSD %	RPD	Limits Rec/RPD
71-43-2	Benzene	ND		100	107	107	94.1	94	13	37-151/30
100-41-4	Ethylbenzene	ND		100	94.7	95	95.8	96	1	37-162/30
1634-04-4	Methyl Tert Butyl Ether	2.9		100	121	118	113	110	7	48-150/39
108-88-3	Toluene	ND		100	107	107	101	101	6	47-150/30
1330-20-7	Xylenes (total)	ND		300	283	94	283	94	0	66-144/38

CAS No.	Surrogate Recoveries	MS	MSD	M42587-6	Limits
17060-07-0	1,2-Dichloroethane-D4 (SUR)	125%	122%	121%	80-127%
2037-26-5	Toluene-D8 (SUR)	99%	96%	98%	85-114%
460-00-4	4-Bromofluorobenzene (SUR)	105%	105%	104%	85-114%

Volatile Surrogate Recovery Summary

Job Number: M42587
Account: EXXONSS Exxon Service Station
Project: CDM:S/S 3-5805 1425 Massachusetts Ave., Boxborough, MA

Method: EPA 624 **Matrix:** AQ

Samples and QC shown here apply to the above method

Lab Sample ID	Lab File ID	S1	S2	S3
M42587-1	A48992.D	127.0	99.0	101.0
M42587-1	A48982.D	121.0	99.0	108.0
M42587-2	A48979.D	122.0	96.0	109.0
M42587-3	A48980.D	117.0	100.0	100.0
M42587-4	A48981.D	116.0	102.0	103.0
M42587-5	A48991.D	116.0	96.0	110.0
M42587-6	A48975.D	121.0	98.0	104.0
M42587-6MS	A48976.D	125.0	99.0	105.0
M42587-6MSD	A48977.D	122.0	96.0	105.0
MSA1631-BS	A48967.D	121.0	97.0	101.0
MSA1631-BSD	A48968.D	119.0	94.0	102.0
MSA1631-MB	A48969.D	121.0	93.0	110.0

Surrogate Compounds	Recovery Limits
S1 = 1,2-Dichloroethane-D4 (SUR)	80-127%
S2 = Toluene-D8 (SUR)	85-114%
S3 = 4-Bromofluorobenzene (SUR)	85-114%

General Chemistry

QC Data Summaries

Includes the following where applicable:

- Method Blank and Blank Spike Summaries
- Duplicate Summaries
- Matrix Spike Summaries

METHOD BLANK AND SPIKE RESULTS SUMMARY
GENERAL CHEMISTRY

Login Number: M42587
Account: EXXONSS - Exxon Service Station
Project: CDM:S/S 3-5805 1425 Massachusetts Ave., Boxborough, MA

Analyte	Batch ID	RL	MB Result	Units	Spike Amount	BSP Result	BSP %Recov	QC Limits
Petroleum Hydrocarbons	GP4957/GN15135	0.60	<0.60	mg/l	5	4.8	96.0	80-120%
Solids, Total Suspended	GN15109	4.0	<4.0	mg/l				

Associated Samples:
Batch GN15109: M42587-1, M42587-2
Batch GP4957: M42587-1, M42587-2

DUPLICATE RESULTS SUMMARY
GENERAL CHEMISTRY

Login Number: M42587
Account: EXXONSS - Exxon Service Station
Project: CDM:S/S 3-5805 1425 Massachusetts Ave., Boxborough, MA

Analyte	Batch ID	QC Sample	Units	Original Result	DUP Result	RPD	QC Limits
Petroleum Hydrocarbons	GP4957/GN15135	M42587-1	mg/l	<0.60	<0.60	0.0	0-20%
Solids, Total Suspended	GN15109	M42589-11	mg/l	<4.0	<4.0	0.0	0-20%

Associated Samples:
Batch GN15109: M42587-1, M42587-2
Batch GP4957: M42587-1, M42587-2

MATRIX SPIKE RESULTS SUMMARY
GENERAL CHEMISTRY

Login Number: M42587
Account: EXXONSS - Exxon Service Station
Project: CDM:S/S 3-5805 1425 Massachusetts Ave., Boxborough, MA

Analyte	Batch ID	QC Sample	Units	Original Result	Spike Amount	MS Result	%Rec	QC Limits
Petroleum Hydrocarbons	GP4957/GN15135	M42587-2	mg/l	<0.60	5	4.8	96.0	75-125%

Associated Samples:
Batch GP4957: M42587-1, M42587-2

Misc. Forms

Custody Documents and Other Forms

Includes the following where applicable:

- Sample Tracking Chronicle

Internal Sample Tracking Chronicle

Exxon Service Station

Job No: M42587

CDM:S/S 3-5805 1425 Massachusetts Ave., Boxborough, MA
Project No: PO#4504183520 WBS#08

Sample Number	Method	Analyzed	By	Prepped	By	Test Codes
M42587-1 Collected: 20-OCT-04 10:30 By: RMB Received: 20-OCT-04 By: SAP GW INF						
M42587-1	EPA 160.2	25-OCT-04	BF			TSS
M42587-1	EPA 418.1	27-OCT-04	BF	27-OCT-04	BF	PHC
M42587-1	EPA 624	29-OCT-04 22:38	AMY			V624BTXM
M42587-1	EPA 624	30-OCT-04 10:03	AMY			V624BTXM
M42587-2 Collected: 20-OCT-04 10:40 By: RMB Received: 20-OCT-04 By: SAP GW EFF						
M42587-2	EPA 160.2	25-OCT-04	BF			TSS
M42587-2	EPA 418.1	27-OCT-04	BF	27-OCT-04	BF	PHC
M42587-2	EPA 624	29-OCT-04 20:44	AMY			V624BTXM
M42587-3 Collected: 20-OCT-04 10:50 By: RMB Received: 20-OCT-04 By: SAP GW GAC 1 EFF						
M42587-3	EPA 624	29-OCT-04 21:22	AMY			V624BTXM
M42587-4 Collected: 20-OCT-04 11:00 By: RMB Received: 20-OCT-04 By: SAP GW GAC 2 EFF						
M42587-4	EPA 624	29-OCT-04 22:00	AMY			V624BTXM
M42587-5 Collected: 20-OCT-04 11:10 By: RMB Received: 20-OCT-04 By: SAP GW AS INF						
M42587-5	EPA 624	30-OCT-04 09:26	AMY			V624BTXM
M42587-6 Collected: 20-OCT-04 11:20 By: RMB Received: 20-OCT-04 By: SAP GW AS EFF						
M42587-6	EPA 624	29-OCT-04 18:12	AMY			V624BTXM

Betty Baer

From: Welch, Jonathan [WelchJE@cdm.com]
Sent: Thursday, October 21, 2004 3:41 PM
To: Betty Baer
Cc: Bouldin, Ryan
Subject: RE: Mobil Boxboro

Please run for BTEX and MTBE via Method 624

Thanks for you help

Jon

-----Original Message-----
From: Betty Baer [mailto:BettyB@Accutest.com]
Sent: Thursday, October 21, 2004 2:59 PM
To: Welch, Jonathan
Subject: Mobil Boxboro

Hi Jon, we received a Chain for this site on 10/20/04, requested analysis is VPH via 624. VPH is not done by 624, do you need VPH and 624 and if so do you need full list for the 624?

Betty

Betty Baer
Accutest Laboratories
495 Technology Center West, Building #1
Marlboro, MA 01752

Phone (508) 481- 6200
Fax (508) 481-7753

ACCUTEST Laboratories

CHAIN OF CUSTODY

495 TECHNOLOGY CENTER WEST • BUILDING ONE
MARLBOROUGH, MA 01752
TEL: 508-481-6200 • FAX: 508-481-7753

ACCUTEST JOB #: M42587

ACCUTEST QUOTE #:

CLIENT INFORMATION

NAME: CDM
ADDRESS: 50 Hampshire St.
CITY, STATE, ZIP: Cambridge MA 02139
SEND REPORT TO: Jon Welch
PHONE #: 617-452-6000

FACILITY INFORMATION

PROJECT NAME: XOM Boxborough
LOCATION: 1425 Mass. Ave Boxborough, MA
PROJECT NO.: 35805
FAX #:

ANALYTICAL INFORMATION

MATRIX CODES

DW - DRINKING WATER
GW - GROUND WATER
WW - WASTE WATER
SO - SOIL
SL - SLUDGE
OI - OIL
LIQ - OTHER LIQUID
SOL - OTHER SOLID

ACCUTEST SAMPLE #	FIELD ID / POINT OF COLLECTION	COLLECTION DATE	COLLECTION TIME	SAMPLED BY:	MATRIX	# OF BOTTLES	PRESERVATION HCl	NaOH	HNO3	H2SO4	NONE	VPH via 624	TPH via 418.1	TSS	LAB USE ONLY
M42587-1	GW Inf	10-20-04	1030	RMB	GW	2	✓					✓	✓	✓	
-2	GW Inf		1030			2	✓						✓		
-3	GW Inf		1030			1					✓			✓	
-4	GW Eff		1040			2	✓					✓			
-5	GW Eff		1040			2	✓						✓	✓	
-6	GW Eff		1040			1					✓			✓	
-3	GW GAC 1 Eff		1050			2	✓					✓			
-4	GW GAC 2 Eff		1100			2	✓					✓			
-5	GW AS Inf		1110			2	✓					✓			
-6	GW AS Eff		1120			2	✓					✓			

25

DATA TURNAROUND INFORMATION

- [x] 14 DAYS STANDARD
- [ ] 7 DAYS *RUSH*
- [ ] 48 HOUR EMERGENCY
- [ ] OTHER

APPROVED BY:

14 DAY TURNAROUND HARDCOPY. EMERGENCY OR RUSH IS FAX DATA UNLESS PREVIOUSLY APPROVED

DATA DELIVERABLE INFORMATION

- [ ] STANDARD
- [ ] COMMERCIAL "B"
- [ ] DISK DELIVERABLE
- [ ] STATE FORMS
- [ ] OTHER (SPECIFY)

COMMENTS/REMARKS

MCP Presumptive Certainty Required

SAMPLES RECEIVED DIRECTLY FROM FIELD SAMPLING

SAMPLE CUSTODY MUST BE DOCUMENTED BELOW EACH TIME SAMPLES CHANGE POSSESION, INCLUDING COURIER DELIVERY

RELINQUISHED BY SAMPLER:	DATE TIME:	RECEIVED BY:	RELINQUISHED BY:	DATE TIME:	RECEIVED BY:
1. Ryan M Boulder	10-20-04, 1245	1. Ryan M Sweeney	2.		2.
RELINQUISHED BY: 3.	DATE TIME:	RECEIVED BY: 3.	RELINQUISHED BY: 4.	DATE TIME:	RECEIVED BY: 4.
RELINQUISHED BY: 5.	DATE TIME:	RECEIVED BY: 5.	SEAL #	PRESERVE WHERE APPLICABLE ☐	ON ICE ☐ TEMPERATURE 16.7 C

New England ACCUTEST Laboratories

11/12/04

Technical Report for

Exxon Service Station

CDM:S/S 3-5805 1425 Massachusetts Ave., Boxborough, MA

PO#4504183520 WBS#08

Accutest Job Number: M42711

Sampling Date: 10/26/04

Report to:

Camp Dresser & McKee
50 Hampshire Avenue
Cambridge, MA 02139

ATTN: Andrew Powers

Total number of pages in report: 19

ACCREDITED IN ACCORDANCE WITH nelac

Test results contained within this data package meet the requirements of the National Environmental Laboratory Accreditation Conference and/or state specific certification programs as applicable.

Reza Pand
Lab Director

Certifications: MA (M-MA136) CT (PH-0109) NH (250204) RI (00071) ME (MA136) FL (E87579) NY (23346) NJ (MA926) NAVY USACE

This report shall not be reproduced, except in its entirety, without the written approval of Accutest Laboratories.

ACCUTEST Laboratories

SAMPLE DELIVERY GROUP CASE NARRATIVE

Client: Exxon Service Station **Job No:** M42711

Site: CDM:S/S 3-5805 1425 Massachusetts Ave., Boxborough, MA **Report Date** 11/11/2004 1:22:39 P

2 Samples were collected on 10/26/2004 and were received at Accutest on 10/26/2004 properly preserved, at 3.3 Deg. C and intact. These Samples received an Accutest job number of M42711. A listing of the Laboratory Sample ID, Client Sample ID and dates of collection are presented in the Results Summary Section of this report.

Except as noted below, all method specified calibrations and quality control performance criteria were met for this job. For more information, please refer to QC summary pages.

Metals By Method SW846 6010B

Matrix: AQ **Batch ID:** MP6295

- All samples were digested within the recommended method holding time.
- All samples were analyzed within the recommended method holding time.
- All method blanks for this batch meet method specific criteria.
- Sample(s) M42711-1DUP, M42711-1MS, M42711-1SDL were used as the QC samples for metals.
- RPD(s) for Serial Dilution for Lead are outside control limits for sample MP6295-SD1. Percent difference acceptable due to low initial sample concentration (< 50 times IDL).

Wet Chemistry By Method EPA 110.2

Matrix: AQ **Batch ID:** GN15127

- All samples were analyzed within the recommended method holding time.
- All method blanks for this batch meet method specific criteria.
- Sample(s) M42710-1DUP were used as the QC samples for Color, Apparent.
- M42711-1 for Color, Apparent: pH at the time of analysis 6.54 pH unit
- M42711-2 for Color, Apparent: pH at the time of analysis 6.84 pH unit

Wet Chemistry By Method EPA 180.1

Matrix: AQ **Batch ID:** GN15128

- All samples were analyzed within the recommended method holding time.
- All method blanks for this batch meet method specific criteria.
- Sample(s) M42710-1DUP were used as the QC samples for Turbidity.

The Accutest Laboratories of New England certifies that all analysis were performed within method specification. It is further recommended that this report to be used in its entirety.The Accutest Laboratories of NE, Laboratory Director or assignee as verified by the signature on the cover page has authorized the release of this report(M42711).

MADEP MCP Analytical Method Report Certification Form

Laboratory Name:	Accutest Laboratories of New England	Project #:	M42711
Project Location:	CDM:S/S 3-5805 1425 Massachusetts Ave., Boxborough, MA	MADEP RTN [1]	None

This form provides certifications for the following data set:
M42711-1, M42711-2

Test Method: EPA 110.2, 180.1, and below

Sample Matrices: Groundwater Soil/Sediment ( ) Drinking Water ( ) Other: (x) ( )

MCP SW-846 Methods Used					
	8260B ( )	8151A ( )	8330 ( )	6010B (x)	7470A/1A ( )
	8270C ( )	8081A ( )	VPH ( )	6020 ( )	9014M [2] ( )
As specified in MADEP Compendium of Analytical Methods (Check all that apply)	8082 ( )	8021B ( )	EPH ( )	7000 S [3] ( )	7196A ( )

1 List Release Tracking Number (RTN) if known
2 M - SW-846 Method 9014 or MADEP Physiologically Available Cyanide (PAC) Method
3 S - SW-846 Methods 7000 Series. List individual method and analyte

An affirmative response to questions A, B, C, and D is required for "Presumptive Certainty status

A	Were all samples received by the laboratory in a condition consistent with that described on the Chain-of-Custody documentation for the data set?	☑	Yes	☐ No [1]
B	Were all QA/QC procedures required for the specified analytical method(s) included in this report followed, including the requirement to note and discuss in a narrative QC data that did not meet appropriate performance standards or guidelines?	☑	Yes	☐ No [1]
C	Does the data included in this report meet all the analytical requirements for "Presumptive Certainty", as described in Section 2.0 (a), (b), (c) and (d) of the MADEP document CAM VII A, "Quality Assurance and Quality Control Guidelines for the Acquisition and Reporting of Analytical Data"?	☑	Yes	☐ No [1]
D	**VPH and EPH methods only:** Was the VPH or EPH method run without significant modifications, as specified in Section 11.3?	☑	Yes	☐ No [1]

A response to questions E and F below is required for "Presumptive Certainty" status

E	Were all QC performance standards and recommendations for the specified methods achieved?	☑ Refer to Narrative	Yes	☐ No [1]
F	Were results for all analyte-list compounds/elements for the specified method(s) reported?	☑ Refer to Narrative	Yes	☐ No [1]

[1] ***All Negative responses must be addressed in an attached Environmental Laboratory case narrative.***

I the undersigned, attest under the pains and penalties of perjury that, based upon my personal inquiry of those responsible for obtaining the information, the material contained in this analytical report is, to the best of my knowledge and belief, accurate and complete.

Signature:		**Position:**	**Laboratory Director**
Printed Name:	**Reza Tand**	**Date:**	**11/11/2004**

Sample Summary

Exxon Service Station

Job No: M42711

CDM:S/S 3-5805 1425 Massachusetts Ave., Boxborough, MA
Project No: PO#4504183520 WBS#08

Sample Number	Collected Date	Time	By	Received	Matrix Code	Type	Client Sample ID
M42711-1	10/26/04	00:00	RMB	10/26/04	AQ	Influent	INF
M42711-2	10/26/04	00:00	RMB	10/26/04	AQ	Effluent	EFF

Accutest Laboratories

Report of Analysis

Client Sample ID:	INF		
Lab Sample ID:	M42711-1	**Date Sampled:**	10/26/04
Matrix:	AQ - Influent	**Date Received:**	10/26/04
		Percent Solids:	n/a
Project:	CDM:S/S 3-5805 1425 Massachusetts Ave., Boxborough, MA		

Metals Analysis

Analyte	Result	RL	Units	DF	Prep	Analyzed	By	Method	Prep Method
Lead	<5.0	5.0	ug/l	1	11/05/04	11/09/04	LMN	SW846 6010B [1]	SW846 3010A [2]

(1) Instrument QC Batch: MA5253
(2) Prep QC Batch: MP6295

RL = Reporting Limit

Accutest Laboratories

Report of Analysis

Client Sample ID:	INF		
Lab Sample ID:	M42711-1	**Date Sampled:**	10/26/04
Matrix:	AQ - Influent	**Date Received:**	10/26/04
		Percent Solids:	n/a
Project:	CDM:S/S 3-5805 1425 Massachusetts Ave., Boxborough, MA		

General Chemistry

Analyte	Result	RL	Units	DF	Analyzed	By	Method
Color, Apparent [a]	30	5	CU	1	10/26/04 18:03	MA	EPA 110.2
Turbidity	4.2	0.50	NTU	1	10/26/04 17:50	MA	EPA 180.1

(a) pH at the time of analysis 6.54 pH unit

RL = Reporting Limit

Metals Analysis

QC Data Summaries

Includes the following where applicable:

- Method Blank Summaries
- Matrix Spike and Duplicate Summaries
- Blank Spike and Lab Control Sample Summaries
- Serial Dilution Summaries

BLANK RESULTS SUMMARY
Part 2 - Method Blanks

Login Number: M42711
Account: EXXONSS - Exxon Service Station
Project: CDM:S/S 3-5805 1425 Massachusetts Ave., Boxborough, MA

QC Batch ID: MP6295
Matrix Type: AQUEOUS

Methods: SW846 6010B
Units: ug/l

Prep Date: 11/05/04

Metal	RL	IDL	MB raw	final
Aluminum	200	8.1		
Antimony	6.0	1.7		
Arsenic	5.0	2.2		
Barium	200	.64		
Beryllium	4.0	.12		
Boron	100	.88		
Cadmium	4.0	.3		
Calcium	5000	2.3		
Chromium	10	.26		
Cobalt	50	.81		
Copper	25	.47		
Iron	100	9.7		
Lead	5.0	1.5	-0.62	<5.0
Magnesium	5000	4.8		
Manganese	15	.15		
Molybdenum	100	.63		
Nickel	40	.61		
Potassium	5000	31		
Selenium	10	1.2		
Silver	5.0	.31		
Sodium	5000	150		
Strontium	10	.25		
Thallium	10	3		
Tin	100	4		
Titanium	50	.57		
Vanadium	50	1.4		
Zinc	20	.75		

Associated samples MP6295: M42711-1, M42711-2

Results < IDL are shown as zero for calculation purposes
(*) Outside of QC limits
(anr) Analyte not requested

MATRIX SPIKE AND DUPLICATE RESULTS SUMMARY

Login Number: M42711
Account: EXXONSS - Exxon Service Station
Project: CDM:S/S 3-5805 1425 Massachusetts Ave., Boxborough, MA

QC Batch ID: MP6295
Matrix Type: AQUEOUS

Methods: SW846 6010B
Units: ug/l

Prep Date:				11/05/04				11/05/04	
Metal	M42711-1 Original	MS	Spikelot MPIRWS2	% Rec	QC Limits	M42711-1 Original	DUP	RPD	QC Limits
Aluminum									
Antimony									
Arsenic									
Barium									
Beryllium									
Boron									
Cadmium									
Calcium									
Chromium									
Cobalt									
Copper									
Iron									
Lead	3.3	1050	1000	104.7	75-125	3.3	2.8	16.4	0-20
Magnesium									
Manganese									
Molybdenum									
Nickel									
Potassium									
Selenium									
Silver									
Sodium									
Strontium									
Thallium									
Tin									
Titanium									
Vanadium									
Zinc									

Associated samples MP6295: M42711-1, M42711-2

Results < IDL are shown as zero for calculation purposes
(*) Outside of QC limits
(N) Matrix Spike Rec. outside of QC limits
(anr) Analyte not requested

SPIKE BLANK AND LAB CONTROL SAMPLE SUMMARY

Login Number: M42711
Account: EXXONSS - Exxon Service Station
Project: CDM:S/S 3-5805 1425 Massachusetts Ave., Boxborough, MA

QC Batch ID: MP6295
Matrix Type: AQUEOUS

Methods: SW846 6010B
Units: ug/l

Prep Date: 11/05/04 11/05/04

Metal	BSP Result	Spikelot MPIRWS2	% Rec	QC Limits	BSD Result	Spikelot MPIRWS2	% Rec	BSD RPD	QC Limit
Aluminum									
Antimony									
Arsenic									
Barium									
Beryllium									
Boron									
Cadmium									
Calcium									
Chromium									
Cobalt									
Copper									
Iron									
Lead	1060	1000	106.0	80-120	1010	1000	101.0	4.8	
Magnesium									
Manganese									
Molybdenum									
Nickel									
Potassium									
Selenium									
Silver									
Sodium									
Strontium									
Thallium									
Tin									
Titanium									
Vanadium									
Zinc									

Associated samples MP6295: M42711-1, M42711-2

Results < IDL are shown as zero for calculation purposes
(*) Outside of QC limits
(anr) Analyte not requested

SERIAL DILUTION RESULTS SUMMARY

Login Number: M42711
Account: EXXONSS - Exxon Service Station
Project: CDM:S/S 3-5805 1425 Massachusetts Ave., Boxborough, MA

QC Batch ID: MP6295
Matrix Type: AQUEOUS

Methods: SW846 6010B
Units: ug/l

Prep Date: 11/05/04

Metal	M42711-1 Original	SDL 1:5	RPD	QC Limits
Aluminum				
Antimony				
Arsenic				
Barium				
Beryllium				
Boron				
Cadmium				
Calcium				
Chromium				
Cobalt				
Copper				
Iron				
Lead	3.34	0.00	100.0(a)	0-10
Magnesium				
Manganese				
Molybdenum				
Nickel				
Potassium				
Selenium				
Silver				
Sodium				
Strontium				
Thallium				
Tin				
Titanium				
Vanadium				
Zinc				

Associated samples MP6295: M42711-1, M42711-2

Results < IDL are shown as zero for calculation purposes
(*) Outside of QC limits
(anr) Analyte not requested
(a) Percent difference acceptable due to low initial sample concentration (< 50 times IDL).

General Chemistry

QC Data Summaries

Includes the following where applicable:

- Method Blank and Blank Spike Summaries
- Duplicate Summaries
- Matrix Spike Summaries

METHOD BLANK AND SPIKE RESULTS SUMMARY
GENERAL CHEMISTRY

Login Number: M42711
Account: EXXONSS - Exxon Service Station
Project: CDM:S/S 3-5805 1425 Massachusetts Ave., Boxborough, MA

Analyte	Batch ID	RL	MB Result	Units	Spike Amount	BSP Result	BSP %Recov	QC Limits
Color, Apparent	GN15127	5	<5	CU				
Turbidity	GN15128	0.50	<0.50	NTU				

Associated Samples:
Batch GN15127: M42711-1, M42711-2
Batch GN15128: M42711-1, M42711-2

DUPLICATE RESULTS SUMMARY
GENERAL CHEMISTRY

Login Number: M42711
Account: EXXONSS - Exxon Service Station
Project: CDM:S/S 3-5805 1425 Massachusetts Ave., Boxborough, MA

Analyte	Batch ID	QC Sample	Units	Original Result	DUP Result	RPD	QC Limits
Color, Apparent	GN15127	M42710-1	CU	200	200	0.0	0-20%
Turbidity	GN15128	M42710-1	NTU	57.4	58.2	1.4	0-20%

Associated Samples:
Batch GN15127: M42711-1, M42711-2
Batch GN15128: M42711-1, M42711-2

Misc. Forms

Custody Documents and Other Forms

Includes the following where applicable:

- Sample Tracking Chronicle

Internal Sample Tracking Chronicle

Exxon Service Station

Job No: M42711

CDM:S/S 3-5805 1425 Massachusetts Ave., Boxborough, MA
Project No: PO#4504183520 WBS#08

Sample Number	Method	Analyzed	By	Prepped	By	Test Codes
M42711-1 Collected: 26-OCT-04 00:00 By: RMB Received: 26-OCT-04 By: RS INF						
M42711-1	EPA 180.1	26-OCT-04 17:50	MA			TURB
M42711-1	EPA 110.2	26-OCT-04 18:03	MA			COL
M42711-1	SW846 6010B	09-NOV-04 00:52	LMN	05-NOV-04	OP	PB
M42711-2 Collected: 26-OCT-04 00:00 By: RMB Received: 26-OCT-04 By: RS EFF						
M42711-2	EPA 180.1	26-OCT-04 17:50	MA			TURB
M42711-2	EPA 110.2	26-OCT-04 18:03	MA			COL
M42711-2	SW846 6010B	09-NOV-04 01:03	LMN	05-NOV-04	OP	PB

CHAIN OF CUSTODY

ACCUTEST Laboratories

495 Tech Center West, Bldg. 1
Marlboro, MA 01752
508-481-6200 FAX: 508-481-6200

Accutest Job #: M42711

Client Information | **Facility Information**

EXXONMOBIL CORPORATION - Regional Laboratory Program Northeast

Consultants Company Name: CDM	Project Name: XOM Boxborough
Address: 50 Hampshire St.	Street: Mass. Ave
City: Cambridge State: MA Zip: 02139	City: Boxborough State: MA
Project Contact: Jon Welch	ExxonMobil Contact: Eric Errico
Sampler's Name: Ryan Bouldin	ExxonMobil Contact Phone #:
Phone #: 617-452-6000 Ext. Fax #:	Location ID#: B-5805 WBS#:
AFE #:	PO# Line#

Analytical Information

BTEX 8260 ☐ 624 ☐ 8021 ☐ 524 ☐ MTBE ☐ TBA ☐ Naphthalene ☐ Oxygenates ☐
VOC AQUEOUS 8260 ☐ 624 ☐ 524 ☐ STD ☐ TCL ☐ PPL ☐ MTBE ☐ TBA ☐ Oxygenates ☐
VOC SOIL 8260 ☐ STD ☐ TCL ☐ PPL ☐ MTBE ☐ TBA ☐ Oxygenates ☐ 5035/LOW ☐ 5035MED ☐
VPH RANGES ☐ TARGETS ☐
EPH RANGES ☐ TARGET (PAH) ☐ DIESEL (PAH) ☐
TPH-CTDEP ☐ TPH418.1 ☐
TPH-MAINE GRO ☐ DRO ☐
TPH-8015 GRO ☐ TPH-8015 DRO ☐
METALS TOTAL ☐ DISSOLVED ☐ HM8 ☐ HM5 ☐
METALS TCLP ☐ SPLP ☐ HM8 ☐ HM5 ☐

Accutest Sample #	Field ID / Point of Collection	Collection: Date	Time	Sampled by	Matrix	# of bottles	Preservation: HCL	NaOH	HNO3	H2SO4	MEOH	Encore	Other	None	BTEX	VOC AQUEOUS	VOC SOIL	VPH	EPH	TPH-CTDEP	TPH-MAINE GRO	TPH-8015 GRO	METALS TOTAL	METALS TCLP	Color & Turbidity	Unfiltered Lead
42711-1	Inf	10-26-04		RMB	GW	2								✓											✓	✓
2	Eff	↓		↓	GW	2								✓											✓	✓

Turnaround Time (Business days)

- ☑ Std. 10 Business Days
- ☐ 8 Day RUSH
- ☐ 5 Day RUSH
- ☐ 3 Day *EMERGENCY*
- ☐ 2 Day *EMERGENCY*
- ☐ 1 Day EMERGENCY

Approved By:/Date

Emergency T/A is for FAX or Lablink Data

Data Deliverable Information

- ☐ Commercial "A"
- ☐ Commercial "B"
- ☐ Full Deliverables
- ☐ Other
- ☐ FULL CLP
- ☐ State Forms
- ☐ Disk Deliverable Format _____

Site Specific: QC Yes ☐ No ☐ If yes, indicate QC sample in Comments and submit triplicate volume.

Comments / Remarks

MCP Presumptive Certainty Required

Loc. 9F, 5A

Sample Custody must be documented below each time samples change possession, including courier delivery.

Relinquished by Sampler:	Date Time:	Received by:	Relinquished by:	Date Time:	Received by:
1 Ryan M Bouldin	10.26.04 1510	1 Ryan M Swelney	2		2
Relinquished by: 3	Date Time:	Received by: 3	Relinquished by: 4	Date Time:	Received by: 4
Relinquished by: 5	Date Time:	Received by: 5	Seal #	Preserved where applicable ☐	On Ice ☑ Temp. 3.3°C

New England
ACCUTEST
Laboratories

12/01/04

Technical Report for

Exxon Service Station

CDM:S/S 3-5805 1425 Massachusetts Ave., Boxborough, MA

PO#4504183520 WBS#08

Accutest Job Number: M43382

Sampling Date: 11/22/04

Report to:

Camp Dresser & McKee
50 Hampshire Avenue
Cambridge, MA 02139

ATTN: Andrew Powers

Total number of pages in report: 15

ACCREDITED IN ACCORDANCE WITH nelac

Test results contained within this data package meet the requirements of the National Environmental Laboratory Accreditation Conference and/or state specific certification programs as applicable.

Reza Pand
Lab Director

Certifications: MA (M-MA136) CT (PH-0109) NH (250204) RI (00071) ME (MA136) FL (E87579) NY (23346) NJ (MA926) NAVY USACE

This report shall not be reproduced, except in its entirety, without the written approval of Accutest Laboratories.

ACCUTEST Laboratories

SAMPLE DELIVERY GROUP CASE NARRATIVE

Client: Exxon Service Station **Job No:** M43382

Site: CDM:S/S 3-5805 1425 Massachusetts Ave., Boxborough, MA **Report Date** 12/1/2004 9:47:47 AM

3 Samples were collected on 11/22/2004 and were received at Accutest on 11/22/2004 properly preserved, at 12.5 Deg. C and intact. These Samples received an Accutest job number of M43382. A listing of the Laboratory Sample ID, Client Sample ID and dates of collection are presented in the Results Summary Section of this report.

Except as noted below, all method specified calibrations and quality control performance criteria were met for this job. For more information, please refer to QC summary pages.

Volatiles by GCMS By Method EPA 624

Matrix: AQ **Batch ID:** MSA1651

- All samples were analyzed within the recommended method holding time.
- All method blanks for this batch meet method specific criteria.
- Sample(s) M43382-3MS, M43382-3MSD were used as the QC samples indicated.
- Only BTX and MTBE requested.

The Accutest Laboratories of New England certifies that all analysis were performed within method specification. It is further recommended that this report to be used in its entirety.The Accutest Laboratories of NE, Laboratory Director or assignee as verified by the signature on the cover page has authorized the release of this report(M43382).

Title: MADEP MCP Response Action Analytical Report Certification Form

MADEP MCP Analytical Method Report Certification Form

Laboratory Name:	Accutest Laboratories of New England	Project #:	M43382
Project Location:	CDM:S/S 3-5805 1425 Massachusetts Ave., Boxborough, MA	MADEP RTN [1]	None

This form provides certifications for the following data set:
M43382-1,M43382-2,M43382-3

Test Method: EPA 624

Sample Matrices: Groundwater Soil/Sediment ( ) Drinking Water ( ) Other: X ( ) ( )

MCP SW-846 Methods used As specified in MADEP Compendium of Analytical Methods (Check all that apply)					
	8260B ( )	8151A ( )	8330 ( )	6010B ( )	7470A/1A ( )
	8270C ( )	8081A ( )	VPH ( )	6020 ( )	9014M [2] ( )
	8082 ( )	8021B ( )	EPH ( )	7000 S [3] ( )	7196A ( )

1 List Release Tracking Number (RTN) if known
2 M - SW-846 Method 9014 for MADEP Physiologically Available Cyanide (PAC) Method
3 S - SW-846 Methods 7000 Series List individual method and analyte

An affirmative response to questions A, B, C, and D is required for "Presumptive Certainty status

A	Were all samples received by the laboratory in a condition consistent with that described on the Chain-of-Custody documentation for the data set?	☑	Yes	☐ No [1]
B	Were all QA/QC procedures required for the specified analytical method(s) included in this report followed, including the requirement to note and discuss in a narrative QC data that did not meet appropriate performance standards or guidelines?	☑	Yes	☐ No [1]
C	Does the data included in this report meet all the analytical requirements for "Presumptive Certainty", as described in Section 2.0 (a), (b), (c) and (d) of the MADEP document CAM VII A, "Quality Assurance and Quality Control Guidelines for the Acquisition and Reporting of Analytical Data"?	☑	Yes	☐ No [1]
D	**VPH and EPH methods only:** Was the VPH or EPH method run without significant modifications, as specified in Section 11.3?	☑	Yes	☐ No [1]

A response to questions E and F below is required for "Presumptive Certainty" status

E	Were all QC performance standards and recommendations for the specified methods achieved?	☑ Refer to Narrative	Yes	☐ No [1]
F	Were results for all analyte-list compounds/elements for the specified method(s) reported?	☐ Refer to Narrative	Yes	☑ No [1]

[1] ***All Negative responses must be addressed in an attached Environmental Laboratory case narrative.***

I the undersigned, attest under the pains and penalties of perjury that, based upon my personal inquiry of those responsible for obtaining the information, the material contained in this analytical report is, to the best of my knowledge and belief, accurate and complete.

Signature: [signature] **Position:** **Laboratory Director**

Printed Name: **Reza Tand** **Date:** **12/01/2004**

Sample Summary

Exxon Service Station

Job No: M43382

CDM:S/S 3-5805 1425 Massachusetts Ave., Boxborough, MA
Project No: PO#4504183520 WBS#08

Sample Number	Collected Date	Time	By	Received	Matrix Code	Type	Client Sample ID
M43382-1	11/22/04	17:00	RMB	11/22/04	AQ	Influent Filtered	INF
M43382-2	11/22/04	17:10	RMB	11/22/04	AQ	Influent Filtered	AS INF
M43382-3	11/22/04	17:20	RMB	11/22/04	AQ	Effluent Filtered	GAC 3 EFF

Accutest Laboratories

Report of Analysis

Client Sample ID:	INF		
Lab Sample ID:	M43382-1	**Date Sampled:**	11/22/04
Matrix:	AQ - Influent Filtered	**Date Received:**	11/22/04
Method:	EPA 624	**Percent Solids:**	n/a
Project:	CDM:S/S 3-5805 1425 Massachusetts Ave., Boxborough, MA		

	File ID	DF	Analyzed	By	Prep Date	Prep Batch	Analytical Batch
Run #1	A49577.D	1	11/23/04	AMY	n/a	n/a	MSA1651
Run #2	A49594.D	20	11/24/04	AMY	n/a	n/a	MSA1651

	Purge Volume
Run #1	5.0 ml
Run #2	5.0 ml

Purgeable Aromatics, MTBE

CAS No.	Compound	Result	RL	Units	Q
71-43-2	Benzene	5.0	0.50	ug/l	
108-88-3	Toluene	15.0	1.0	ug/l	
100-41-4	Ethylbenzene	68.0	1.0	ug/l	
1330-20-7	Xylenes (total)	215	1.0	ug/l	
1634-04-4	Methyl Tert Butyl Ether	2620 [a]	20	ug/l	

CAS No.	Surrogate Recoveries	Run# 1	Run# 2	Limits
17060-07-0	1,2-Dichloroethane-D4 (SUR)	85%	90%	80-127%
2037-26-5	Toluene-D8 (SUR)	95%	94%	85-114%
460-00-4	4-Bromofluorobenzene (SUR)	89%	86%	85-114%

(a) Result is from Run# 2

ND = Not detected
RL = Reporting Limit
E = Indicates value exceeds calibration range

J = Indicates an estimated value
B = Indicates analyte found in associated method blank
N = Indicates presumptive evidence of a compound

Accutest Laboratories

Report of Analysis

Client Sample ID:	AS INF		
Lab Sample ID:	M43382-2	**Date Sampled:**	11/22/04
Matrix:	AQ - Influent Filtered	**Date Received:**	11/22/04
Method:	EPA 624	**Percent Solids:**	n/a
Project:	CDM:S/S 3-5805 1425 Massachusetts Ave., Boxborough, MA		

	File ID	DF	Analyzed	By	Prep Date	Prep Batch	Analytical Batch
Run #1	A49578.D	1	11/23/04	AMY	n/a	n/a	MSA1651
Run #2	A49595.D	10	11/24/04	AMY	n/a	n/a	MSA1651

	Purge Volume
Run #1	5.0 ml
Run #2	5.0 ml

Purgeable Aromatics, MTBE

CAS No.	Compound	Result	RL	Units	Q
71-43-2	Benzene	1.6	0.50	ug/l	
108-88-3	Toluene	3.6	1.0	ug/l	
100-41-4	Ethylbenzene	16.3	1.0	ug/l	
1330-20-7	Xylenes (total)	65.8	1.0	ug/l	
1634-04-4	Methyl Tert Butyl Ether	1180 [a]	10	ug/l	

CAS No.	Surrogate Recoveries	Run# 1	Run# 2	Limits
17060-07-0	1,2-Dichloroethane-D4 (SUR)	87%	89%	80-127%
2037-26-5	Toluene-D8 (SUR)	94%	94%	85-114%
460-00-4	4-Bromofluorobenzene (SUR)	95%	85%	85-114%

(a) Result is from Run# 2

ND = Not detected
RL = Reporting Limit
E = Indicates value exceeds calibration range

J = Indicates an estimated value
B = Indicates analyte found in associated method blank
N = Indicates presumptive evidence of a compound

Report of Analysis

Client Sample ID:	GAC 3 EFF		
Lab Sample ID:	M43382-3	**Date Sampled:**	11/22/04
Matrix:	AQ - Effluent Filtered	**Date Received:**	11/22/04
Method:	EPA 624	**Percent Solids:**	n/a
Project:	CDM:S/S 3-5805 1425 Massachusetts Ave., Boxborough, MA		

	File ID	DF	Analyzed	By	Prep Date	Prep Batch	Analytical Batch
Run #1	A49573.D	1	11/23/04	AMY	n/a	n/a	MSA1651
Run #2							

	Purge Volume
Run #1	5.0 ml
Run #2	

Purgeable Aromatics, MTBE

CAS No.	Compound	Result	RL	Units	Q
71-43-2	Benzene	ND	0.50	ug/l	
108-88-3	Toluene	2.1	1.0	ug/l	
100-41-4	Ethylbenzene	ND	1.0	ug/l	
1330-20-7	Xylenes (total)	ND	1.0	ug/l	
1634-04-4	Methyl Tert Butyl Ether	ND	1.0	ug/l	

CAS No.	Surrogate Recoveries	Run# 1	Run# 2	Limits
17060-07-0	1,2-Dichloroethane-D4 (SUR)	85%		80-127%
2037-26-5	Toluene-D8 (SUR)	97%		85-114%
460-00-4	4-Bromofluorobenzene (SUR)	92%		85-114%

ND = Not detected
RL = Reporting Limit
E = Indicates value exceeds calibration range

J = Indicates an estimated value
B = Indicates analyte found in associated method blank
N = Indicates presumptive evidence of a compound

GC/MS Volatiles

QC Data Summaries

Includes the following where applicable:

- Method Blank Summaries
- Blank Spike Summaries
- Matrix Spike and Duplicate Summaries
- Surrogate Recovery Summaries

Method Blank Summary

Job Number: M43382
Account: EXXONSS Exxon Service Station
Project: CDM:S/S 3-5805 1425 Massachusetts Ave., Boxborough, MA

Sample	File ID	DF	Analyzed	By	Prep Date	Prep Batch	Analytical Batch
MSA1651-MB	A49571.D	1	11/23/04	AMY	n/a	n/a	MSA1651

The QC reported here applies to the following samples: **Method:** EPA 624

M43382-1, M43382-2, M43382-3

CAS No.	Compound	Result	RL	Units	Q
71-43-2	Benzene	ND	0.50	ug/l	
100-41-4	Ethylbenzene	ND	1.0	ug/l	
1634-04-4	Methyl Tert Butyl Ether	ND	1.0	ug/l	
108-88-3	Toluene	ND	1.0	ug/l	
1330-20-7	Xylenes (total)	ND	1.0	ug/l	

CAS No.	Surrogate Recoveries		Limits
17060-07-0	1,2-Dichloroethane-D4 (SUR)	86%	80-127%
2037-26-5	Toluene-D8 (SUR)	94%	85-114%
460-00-4	4-Bromofluorobenzene (SUR)	88%	85-114%

Blank Spike/Blank Spike Duplicate Summary

Job Number: M43382
Account: EXXONSS Exxon Service Station
Project: CDM:S/S 3-5805 1425 Massachusetts Ave., Boxborough, MA

Sample	File ID	DF	Analyzed	By	Prep Date	Prep Batch	Analytical Batch
MSA1651-BS	A49568.D	1	11/23/04	AMY	n/a	n/a	MSA1651
MSA1651-BSD	A49569.D	1	11/23/04	AMY	n/a	n/a	MSA1651

The QC reported here applies to the following samples: **Method:** EPA 624

M43382-1, M43382-2, M43382-3

CAS No.	Compound	Spike ug/l	BSP ug/l	BSP %	BSD ug/l	BSD %	RPD	Limits Rec/RPD
71-43-2	Benzene	20	19.0	95	21.0	105	10	37-151/30
100-41-4	Ethylbenzene	20	21.0	105	24.0	120	13	37-162/30
1634-04-4	Methyl Tert Butyl Ether	20	16.9	85	20.1	101	17	62-147/30
108-88-3	Toluene	20	17.6	88	20.0	100	13	47-150/30
1330-20-7	Xylenes (total)	60	63.7	106	68.6	114	7	73-139/30

CAS No.	Surrogate Recoveries	BSP	BSD	Limits
17060-07-0	1,2-Dichloroethane-D4 (SUR)	90%	95%	80-127%
2037-26-5	Toluene-D8 (SUR)	104%	101%	85-114%
460-00-4	4-Bromofluorobenzene (SUR)	101%	96%	85-114%

Matrix Spike/Matrix Spike Duplicate Summary

Job Number: M43382
Account: EXXONSS Exxon Service Station
Project: CDM:S/S 3-5805 1425 Massachusetts Ave., Boxborough, MA

Sample	File ID	DF	Analyzed	By	Prep Date	Prep Batch	Analytical Batch
M43382-3MS	A49592.D	5	11/24/04	AMY	n/a	n/a	MSA1651
M43382-3MSD	A49593.D	5	11/24/04	AMY	n/a	n/a	MSA1651
M43382-3	A49573.D	1	11/23/04	AMY	n/a	n/a	MSA1651

The QC reported here applies to the following samples: **Method:** EPA 624

M43382-1, M43382-2, M43382-3

CAS No.	Compound	M43382-3 ug/l	Q	Spike ug/l	MS ug/l	MS %	MSD ug/l	MSD %	RPD	Limits Rec/RPD
71-43-2	Benzene	ND		100	77.8	78	74.9	75	4	37-151/30
100-41-4	Ethylbenzene	ND		100	92.1	92	100	100	8	37-162/30
1634-04-4	Methyl Tert Butyl Ether	ND		100	78.4	78	87.3	87	11	48-150/39
108-88-3	Toluene	2.1		100	78.4	76	83.6	82	6	47-150/30
1330-20-7	Xylenes (total)	ND		300	279	93	287	96	3	66-144/38

CAS No.	Surrogate Recoveries	MS	MSD	M43382-3	Limits
17060-07-0	1,2-Dichloroethane-D4 (SUR)	82%	86%	85%	80-127%
2037-26-5	Toluene-D8 (SUR)	98%	99%	97%	85-114%
460-00-4	4-Bromofluorobenzene (SUR)	89%	89%	92%	85-114%

Volatile Surrogate Recovery Summary

Job Number: M43382
Account: EXXONSS Exxon Service Station
Project: CDM:S/S 3-5805 1425 Massachusetts Ave., Boxborough, MA

Method: EPA 624 **Matrix:** AQ

Samples and QC shown here apply to the above method

Lab Sample ID	Lab File ID	S1	S2	S3
M43382-1	A49594.D	90.0	94.0	86.0
M43382-1	A49577.D	85.0	95.0	89.0
M43382-2	A49595.D	89.0	94.0	85.0
M43382-2	A49578.D	87.0	94.0	95.0
M43382-3	A49573.D	85.0	97.0	92.0
M43382-3MS	A49592.D	82.0	98.0	89.0
M43382-3MSD	A49593.D	86.0	99.0	89.0
MSA1651-BS	A49568.D	90.0	104.0	101.0
MSA1651-BSD	A49569.D	95.0	101.0	96.0
MSA1651-MB	A49571.D	86.0	94.0	88.0

Surrogate Compounds	Recovery Limits
S1 = 1,2-Dichloroethane-D4 (SUR)	80-127%
S2 = Toluene-D8 (SUR)	85-114%
S3 = 4-Bromofluorobenzene (SUR)	85-114%

Misc. Forms

Custody Documents and Other Forms

Includes the following where applicable:

- Sample Tracking Chronicle

Internal Sample Tracking Chronicle

Exxon Service Station

Job No: M43382

CDM:S/S 3-5805 1425 Massachusetts Ave., Boxborough, MA
Project No: PO#4504183520 WBS#08

Sample Number	Method	Analyzed	By	Prepped	By	Test Codes
M43382-1 Collected: 22-NOV-04 17:00 By: RMB Received: 22-NOV-04 By: RS INF						
M43382-1	EPA 624	23-NOV-04 22:59	AMY			V624BTXM
M43382-1	EPA 624	24-NOV-04 10:05	AMY			V624BTXM
M43382-2 Collected: 22-NOV-04 17:10 By: RMB Received: 22-NOV-04 By: RS AS INF						
M43382-2	EPA 624	23-NOV-04 23:38	AMY			V624BTXM
M43382-2	EPA 624	24-NOV-04 10:44	AMY			V624BTXM
M43382-3 Collected: 22-NOV-04 17:20 By: RMB Received: 22-NOV-04 By: RS GAC 3 EFF						
M43382-3	EPA 624	23-NOV-04 20:21	AMY			V624BTXM

ACCUTEST Laboratories

CHAIN OF CUSTODY

495 TECHNOLOGY CENTER WEST • BUILDING ONE
MARLBOROUGH, MA 01752
TEL: 508-481-6200 • FAX: 508-481-7753

ACCUTEST JOB #: M43382
ACCUTEST QUOTE #:

CLIENT INFORMATION

NAME: CDM
ADDRESS: 50 Hampshire St.
CITY, STATE, ZIP: Cambridge, MA
SEND REPORT TO: Jon Welch
PHONE #: 617-452-6000

FACILITY INFORMATION

PROJECT NAME: Xom Boxboro - 3-5805
LOCATION: Boxboro, MA
PROJECT NO.: 3-5805, 20474-41118
FAX #:

ANALYTICAL INFORMATION

BTEX/MTBE via 624

MATRIX CODE

DW - DRINKING WATER
GW - GROUND WATER
WW - WASTE WATER
SO - SOIL
SL - SLUDGE
OI - OIL
LIQ - OTHER LIQUID
SOL - OTHER SOLID

ACCUTEST SAMPLE #	FIELD ID / POINT OF COLLECTION	COLLECTION DATE	COLLECTION TIME	SAMPLED BY:	MATRIX	# OF BOTTLES	PRESERVATION HCl	NaOH	HNO3	H2SO4	NONE	BTEX/MTBE via 624	LAB USE ONLY
M43382-1	Inf	11-22-04	1700	RMB	GW	2	✓					✓	
-2	AS Inf	↓	1710	↓	↓	2	✓					✓	
-3	GAC 3 Eff	↓	1720	↓	↓	2	✓					✓	

DATA TURNAROUND INFORMATION

- ☐ 14 DAYS STANDARD
- ☐ 7 DAYS RUSH
- ☐ 48 HOUR EMERGENCY
- ☒ OTHER 2 day

APPROVED BY:

14 DAY TURNAROUND HARDCOPY. EMERGENCY OR RUSH IS FAX DATA UNLESS PREVIOUSLY APPROVED

DATA DELIVERABLE INFORMATION

- ☐ STANDARD
- ☐ COMMERCIAL "B"
- ☐ DISK DELIVERABLE
- ☐ STATE FORMS
- ☐ OTHER (SPECIFY)

SAMPLES RECEIVED DIRECTLY FROM FIELD SAMPLING

COMMENTS/REMARKS

MCP Presumptive Certainty
GW-1 Stds Apply
Loc. 442

SAMPLE CUSTODY MUST BE DOCUMENTED BELOW EACH TIME SAMPLES CHANGE POSSESION, INCLUDING COURIER DELIVERY

RELINQUISHED BY SAMPLER:	DATE TIME:	RECEIVED BY:	RELINQUISHED BY:	DATE TIME:	RECEIVED BY:
1. Ryan M Boudi	11-22-04 1740	1.	2.	11/22/04 18:15	2.
RELINQUISHED BY: 3.	DATE TIME:	RECEIVED BY: 3.	RELINQUISHED BY: 4.	DATE TIME:	RECEIVED BY: 4.
RELINQUISHED BY: 5.	DATE TIME:	RECEIVED BY: 5.	SEAL # Direct from the	PRESERVE WHERE APPLICABLE ☐	ON ICE ☐ TEMPERATURE 2.5

New England
ACCUTEST.
Laboratories

10/20/05

Technical Report for

Exxon Service Station

CDM:S/S 3-5805 1425 Massachusetts Ave., Boxborough, MA

PO#4506003635 WBS#08

Accutest Job Number: M43544

Sampling Date: 11/30/04

Report to:

Camp, Dresser & McKee

HimmelDB@cdm.com

ATTN: Dana Himmel

Total number of pages in report: 84

ACCREDITED IN ACCORDANCE WITH nelac

Test results contained within this data package meet the requirements of the National Environmental Laboratory Accreditation Conference and/or state specific certification programs as applicable.

Reza Tand
Lab Director

Certifications: MA (M-MA136) CT (PH-0109) NH (250204) RI (00071) ME (MA136) FL (E87579) NY (23346) NJ (MA926) NAVY USACE

This report shall not be reproduced, except in its entirety, without the written approval of Accutest Laboratories.

Sections: 1 2 3 4 5 6 7

Table of Contents

-1-

Section 1: Sample Summary 4
Section 2: Sample Results 6
2.1: M43544-1: MW-33 6
2.2: M43544-2: MW-9 7
2.3: M43544-3: MW-35 8
2.4: M43544-4: MW-36 9
2.5: M43544-5: MW-34 10
2.6: M43544-6: MW-37 11
2.7: M43544-7: MW-5 12
2.8: M43544-8: MW-38 13
2.9: M43544-9: MW-3 14
2.10: M43544-10: DUP-1 15
2.11: M43544-11: MW-19 16
2.12: M43544-12: MW-15 17
2.13: M43544-13: MW-16 18
2.14: M43544-14: MW-28 19
2.15: M43544-15: MW-29 20
2.16: M43544-16: MW-27 21
2.17: M43544-17: POET INF 22
2.18: M43544-18: POET MID 24
2.19: M43544-19: POET EFF 26
2.20: M43544-21: TRIP BLANK 28
2.21: M43544-22: GW INF 30
2.22: M43544-23: GW EFF 32
2.23: M43544-24: MW-6 34
2.24: M43544-25: MW-7 35
Section 3: Misc. Forms 36
3.1: Chain of Custody 37
3.2: VPH Form 40
3.3: Sample Tracking Chronicle 58
Section 4: GC/MS Volatiles - QC Data Summaries 62
4.1: Method Blank Summary 63
4.2: Blank Spike Summary 65
4.3: Duplicate Summary 67
4.4: Surrogate Recovery Summaries 69
Section 5: GC Volatiles - QC Data Summaries 70
5.1: Method Blank Summary 71
5.2: Blank Spike/Blank Spike Duplicate Summary 73
5.3: Surrogate Recovery Summaries 75
Section 6: Metals Analysis - QC Data Summaries 76
6.1: Prep QC MP6398: Pb 77
Section 7: General Chemistry - QC Data Summaries 81

Sections: 1 2 3 4 5 6 7

Table of Contents

-2-

7.1: Method Blank and Spike Results Summary 82
7.2: Duplicate Results Summary 83
7.3: Matrix Spike Results Summary 84

Sample Summary

Exxon Service Station

Job No: M43544

CDM:S/S 3-5805 1425 Massachusetts Ave., Boxborough, MA
Project No: PO#4506003635 WBS#08

Sample Number	Collected Date	Time By	Received	Matrix Code	Matrix Type	Client Sample ID
M43544-1	11/30/04	08:50 TAN	12/01/04	AQ	Ground Water	MW-33
M43544-2	11/30/04	09:20 TAN	12/01/04	AQ	Ground Water	MW-9
M43544-3	11/30/04	09:45 TAN	12/01/04	AQ	Ground Water	MW-35
M43544-4	11/30/04	10:15 TAN	12/01/04	AQ	Ground Water	MW-36
M43544-5	11/30/04	10:40 TAN	12/01/04	AQ	Ground Water	MW-34
M43544-6	11/30/04	12:15 TAN	12/01/04	AQ	Ground Water	MW-37
M43544-7	11/30/04	13:20 RMB	12/01/04	AQ	Ground Water	MW-5
M43544-8	11/30/04	13:45 RMB	12/01/04	AQ	Ground Water	MW-38
M43544-9	11/30/04	14:20 RMB	12/01/04	AQ	Ground Water	MW-3
M43544-10	11/30/04	00:00 RMB	12/01/04	AQ	Ground Water	DUP-1
M43544-11	11/30/04	15:00 RMB	12/01/04	AQ	Ground Water	MW-19
M43544-12	11/30/04	15:20 RMB	12/01/04	AQ	Ground Water	MW-15
M43544-13	11/30/04	15:30 RMB	12/01/04	AQ	Ground Water	MW-16

Sample Summary
(continued)

Exxon Service Station

Job No: M43544

CDM:S/S 3-5805 1425 Massachusetts Ave., Boxborough, MA
Project No: PO#4506003635 WBS#08

Sample Number	Collected Date	Time By	Received	Matrix Code	Matrix Type	Client Sample ID
M43544-14	11/30/04	15:40 RMB	12/01/04	AQ	Ground Water	MW-28
M43544-15	11/30/04	15:45 RMB	12/01/04	AQ	Ground Water	MW-29
M43544-16	11/30/04	16:00 RMB	12/01/04	AQ	Ground Water	MW-27
M43544-17	11/30/04	16:20 RMB	12/01/04	DW	Drinking Water Inf	POET INF
M43544-18	11/30/04	16:30 RMB	12/01/04	DW	Drinking Water	POET MID
M43544-19	11/30/04	16:40 RMB	12/01/04	DW	Drinking Water Eff	POET EFF
M43544-20	11/30/04	16:45 RMB	12/01/04	DW	Drinking Water Eff	POET EFF (DUP)
M43544-21	11/30/04	00:00 RMB	12/01/04	DW	Drinking Water TB	TRIP BLANK
M43544-22	11/30/04	16:50 RMB	12/01/04	AQ	Influent	GW INF
M43544-23	11/30/04	16:55 RMB	12/01/04	AQ	Effluent	GW EFF
M43544-24	11/30/04	11:20 RMB	12/01/04	AQ	Ground Water	MW-6
M43544-25	11/30/04	11:55 RMB	12/01/04	AQ	Ground Water	MW-7

Accutest LabLink@56924 15:15 20-Oct-2005

Report of Analysis

Client Sample ID:	GW INF		
Lab Sample ID:	M43544-22	Date Sampled:	11/30/04
Matrix:	AQ - Influent	Date Received:	12/01/04
		Percent Solids:	n/a
Project:	CDM:S/S 3-5805 1425 Massachusetts Ave., Boxborough, MA		

Metals Analysis

Analyte	Result	RL	Units	DF	Prep	Analyzed By		Method	Prep Method
Lead	< 5.0	5.0	ug/l	1	12/06/04	12/07/04	LMN	SW846 6010B [1]	SW846 3010A [2]

(1) Instrument QC Batch: MA5316
(2) Prep QC Batch: MP6398

RL = Reporting Limit

Accutest LabLink@56924 15:15 20-Oct-2005

Report of Analysis

Client Sample ID:	GW INF		
Lab Sample ID:	M43544-22	Date Sampled:	11/30/04
Matrix:	AQ - Influent	Date Received:	12/01/04
		Percent Solids:	n/a
Project:	CDM:S/S 3-5805 1425 Massachusetts Ave., Boxborough, MA		

General Chemistry

Analyte	Result	RL	Units	DF	Analyzed	By	Method
Color, Apparent	30	5	CU	1	12/01/04 15:00	MA	EPA 110.2
Petroleum Hydrocarbons	<0.61	0.61	mg/l	1	12/06/04	BF	EPA 418.1
Solids, Total Suspended	7.0	4.0	mg/l	1	12/01/04	BF	EPA 160.2
Turbidity	6.9	0.50	NTU	1	12/01/04 15:30	MA	EPA 180.1

RL = Reporting Limit

Custody Documents and Other Forms

Includes the following where applicable:

- Chain of Custody
- VPH Form
- Sample Tracking Chronicle

ACCUTEST Laboratories

CHAIN OF CUSTODY

495 Tech Center West, Bldg. 1
Marlboro, MA 01752
508-481-6200 FAX: 508-481-6200

Accutest Job #: M43544

Client Information | **Facility Information**

EXXONMOBIL CORPORATION - Regional Laboratory Program Northeast

Consultants Company Name: CDM
Project Name: XOM Boxboro - 35805
Address: 50 Hampshire St
Street: 1425 Mass Ave
City: Cambridge State: MA Zip: 02139
City: Boxboro State: MA
Project Contact: Jon Welch
ExxonMobil Contact: Eric Errico
Sampler's Name: Ryan Bouldin / Ted Nawn
ExxonMobil Contact Phone #:
Phone #: 617-452-6000 Ext. Fax #:
Location ID# 35805 WBS#
AFE #:
PO# Line#

Analytical Information

BTEX 8260 ☐ 524 ☐ 8021 ☐ 524 ☐ MTBE ☐ TBA ☐ Naphthalene ☐ Oxygenates ☐
VOC AQUEOUS 8260 ☐ 624 ☐ 624 ☐ STD ☐ TCL ☐ PPL ☐ MTBE ☐ TBA ☐ Oxygenates ☐
VOC SOIL 8260 ☐ STD ☐ TCL ☐ PPL ☐ MTBE ☐ TBA ☐ Oxygenates ☐ 5035LOW ☐ 5035MED ☐
VPH RANGES ☒ TARGETS ☒
EPH RANGES ☐ TARGET (PAH) ☐ DIESEL (PAH) ☐
TPH-CTDEP ☐ TPH418.1 ☐
TPH-MAINE GRO ☐ DRO ☐
TPH-8015 GRO ☐ TPH-8015 DRO ☐
METALS TOTAL ☐ DISSOLVED ☐ HM8 ☐ HM5 ☐
METALS TCLP ☐ SPLP ☐ HM8 ☐ HM5 ☐

Accutest Sample #	Field ID / Point of Collection	Collection Date	Collection Time	Sampled by	Matrix	# of bottles	Preservation: HCL	NaOH	HNO3	H2SO4	MEOH	Encore	Other	None	VPH RANGES TARGETS
13544-1	MW-33	11-30-04	850	TAN	GW	2	✓								✓
-2	MW-9		920												
-3	MW-35		945												
-4	MW-36		1015												
-5	MW-34		1040												
-6	MW-37		1215												
-7	MW-5		1320	RMB											
-8	MW-38		1345												
-9	MW-3		1420												
-10	DUP-1		—												
-11	MW-19		1500												

Turnaround Time (Business days)

- ☐ Std. 10 Business Days — Approved By/Date
- ☐ 8 Day RUSH
- ☒ 5 Day RUSH
- ☐ 3 Day *EMERGENCY*
- ☐ 2 Day *EMERGENCY*
- ☐ 1 Day EMERGENCY

Emergency T/A is for FAX or Lablink Data

Data Deliverable Information

- ☐ Commercial "A"
- ☐ Commercial "B"
- ☐ Full Deliverables
- ☐ Other
- ☐ FULL CLP
- ☐ State Forms
- ☐ Disk Deliverable Format

Site Specific: QC Yes ☐ No ☐ If yes, indicate QC sample in Comments and submit triplicate volume.

Comments / Remarks

MCP Presumptive Certainty Required.
GW-1 Stds Apply

LOC-6D, 4D, 9D, 1C7

Sample Custody must be documented below each time samples change possession, including courier delivery.

Relinquished by Sampler:	Date Time:	Received by:	Relinquished by:	Date Time:	Received by:
1 Ryan M Bouldin	11-30-04 2000	1 [signature]	2 [signature]	12/1/04 13:00	2 [signature]
Relinquished by: 3	Date Time:	Received by: 3	Relinquished by: 4	Date Time:	Received by: 4
Relinquished by: 5	Date Time:	Received by: 5	Seal #	Preserved where applicable ☐	On Ice ☑ Temp. 2.5 C

3.1 3

M43544: Chain of Custody
Page 1 of 3

ACCUTEST Laboratories

CHAIN OF CUSTODY

495 Tech Center West, Bldg. 1
Marlboro, MA 01752
508-481-6200 FAX: 508-481-6200

Accutest Job #: M43544

Client Information | **Facility Information**

EXXONMOBIL CORPORATION - Regional Laboratory Program Northeast

Consultants Company Name: CDM	Project Name: Xom Boxboro - 35805
Address: 50 Hampshire St.	Street: 1425 Mass. Ave
City: Cambridge State: MA Zip: 02139	City: Boxboro State: MA
Project Contact: Jon Welch	ExxonMobil Contact: Eric Errico
Sampler's Name: Ryan Bouldin	ExxonMobil Contact Phone #:
Phone #: 617-452-6000 Ext. Fax #:	Location ID#: 3-5805 WBS#:
AFE #:	PO#: Line#:

Analytical Information

Accutest Sample #	Field ID / Point of Collection	Collection Date *2	Time	Sampled by	Matrix	# of bottles	HCL	NaOH	HNO3	H2SO4	MEOH	Encore	Other	None	BTEX 8260 ☐ 624 ☐ 8021 ☐ 524 ☐ MTBE ☐ TBA ☐ Naphthalene ☐ Oxygenates ☐	VOC AQUEOUS 8260 ☐ 624 ☐ 524 ☒ STD ☐ TCL ☐ PPL ☐ MTBE ☐ TBA ☐ Oxygenates ☐	VOC SOIL 8260 ☐ STD ☐ TCL ☐ PPL ☐ MTBE ☐ TBA ☐ Oxygenates ☐ 5035/LOW ☐ 5035/MED ☐	VPH RANGES ☒ TARGETS ☒	EPH RANGES ☐ TARGET (PAH) ☐ DIESEL (PAH) ☐	TPH-CTDEP ☐ TPH-418.1 ☐	TPH-MAINE GRO ☐ DRO ☐	TPH-8015 GRO ☐ TPH-8015 DRO ☐	METALS TOTAL ☐ DISSOLVED ☐ HM8 ☐ HM5 ☐	METALS TCLP ☐ SPLP ☐ HM8 ☐ HM5 ☐
13544-12	MW-15	11-30-04	1520	RMB	GW	2	✓											✓						
-13	MW-16	↓	1530		↓	↓	↓											↓						
-14	MW-28	↓	1540		↓	↓	↓											↓						
-15	MW-29	↓	1545		↓	↓	↓											↓						
-16	MW-27	↓	1600		↓	↓	↓											↓						
-17	POET Inf	↓	1620		DW	↓	↓									✓								
-18	POET Mid	↓	1630		↓	↓	↓									↓								
-19	POET Eff	↓	1640		↓	↓	↓									↓								
-20	POET Eff (DUP)*	↓	1645		↓	↓	↓									↓								
-21	Trip Blank		—	—	↓	1	↓									↓								

Turnaround Time (Business days)

- ☐ Std. 10 Business Days — Approved By:/Date
- ☐ 8 Day RUSH
- ☒ 5 Day RUSH [redacted]
- ☐ 3 Day *EMERGENCY*
- ☐ 2 Day *EMERGENCY*
- ☐ 1 Day EMERGENCY

Emergency T/A is for FAX or Lablink Data

Data Deliverable Information

- ☐ Commercial "A"
- ☐ Commercial "B"
- ☐ Full Deliverables
- ☐ Other
- ☐ FULL CLP
- ☐ State Forms
- ☐ Disk Deliverable Format _____

Site Specific: QC Yes ☐ No ☐ If yes, indicate QC sample in Comments and submit triplicate volume.

Comments / Remarks

*Only analyse if hits occur in initial sample.
-MCP Presumptive Certainty Required
-GW-1 Stds. Apply
*2 -Bottles labeled 11/31/04 change to 11/30/04

Sample Custody must be documented below each time samples change possession, including courier delivery.

Relinquished by Sampler:	Date Time:	Received by:	Relinquished by:	Date Time:	Received by:
1 Ryan M Bouldin	11-30-04 2000	1 [signature]	2 [signature]	12/1/04 13:00	2
Relinquished by: 3	Date Time:	Received by: 3	Relinquished by: 4	Date Time:	Received by: 4
Relinquished by: 5	Date Time:	Received by: 5	Seal #	Preserved where applicable ☐	On Ice ☒ 2.5 Temp.

M43544: Chain of Custody
Page 2 of 3

ACCUTEST Laboratories

CHAIN OF CUSTODY

495 Tech Center West, Bldg. 1
Marlboro, MA 01752
508-481-6200 FAX: 508-481-6200

Accutest Job #: M43544

Client Information | **Facility Information**

EXXONMOBIL CORPORATION - Regional Laboratory Program Northeast

Consultants Company Name: CDM
Address: 50 Hampshire St.
City: Cambridge State: MA Zip: 02139
Project Contact: Jon Welch
Sampler's Name: Ryan Bouldin
Phone #: 617-452-6000 Ext. Fax #:
AFE #:

Project Name: Xom Boxboro -35805
Street: 1425 Mass. Ave
City: Boxboro State: MA
ExxonMobil Contact: Eric Errico
ExxonMobil Contact Phone #:
Location ID# 35805 WBS#
PO# Line#

Accutest Sample #	Field ID / Point of Collection	Collection Date	Collection Time	Sampled by	Matrix	# of bottles	Preservation HCL	NaOH	HNO3	H2SO4	MEOH	Encore	Other	None	BTEX 8260 ☐ 524 ☐ 8021 ☐ 524 ☐ MTBE ☐ TBA ☐ Naphthalene ☐ Oxygenates ☐	VOC AQUEOUS 8260 ☐ 524 ☐ STD ☐ TCL ☐ PPL ☐ MTBE ☐ TBA ☐ Oxygenates ☐	VOC SOIL 8260 ☐ STD ☐ TCL ☐ PPL ☐ MTBE ☐ TBA ☐ Oxygenates ☐ 5035/LOW ☐ 5035/MED ☐	VPH RANGES ☐ TARGETS ☐	EPH RANGES ☐ TARGET (PAH) ☐ DIESEL (PAH) ☐	TPH-CTDEP ☐ TPH418.1 X	TPH-MAINE GRO ☐ DRO ☐	TPH-8015 GRO ☐ TPH-8015 DRO ☐	METALS TOTAL ☐ DISSOLVED ☐ HM8 ☐ HM5 ☐	METALS TCLP ☐ SPLP ☐ HM8 ☐ HM5 ☐	TSS	Color / Turbidity	Unfiltered Lead
	GW Inf	11-30-04	1650	RMB	GW	1								✓										✓	✓	✓	
-22	GW Inf					1								✓													
	GW Inf					2	✓													✓							
	GW Eff		1655			1								✓										✓	✓	✓	
-23	GW Eff					1								✓													
	GW Eff					2	✓													✓							

Turnaround Time (Business days)

- ☐ Std. 10 Business Days — Approved By:/Date
- ☐ 8 Day RUSH
- ☒ 5 Day RUSH [redacted]
- ☐ 3 Day *EMERGENCY*
- ☐ 2 Day *EMERGENCY*
- ☐ 1 Day EMERGENCY

Emergency T/A is for FAX or Lablink Data

Data Deliverable Information

- ☐ Commercial "A"
- ☐ Commercial "B"
- ☐ Full Deliverables
- ☐ Other
- ☐ FULL CLP
- ☐ State Forms
- ☐ Disk Deliverable Format ____

Site Specific: QC Yes ☐ No ☐ If yes, indicate QC sample in Comments and submit triplicate volume.

Comments / Remarks

MCP Presumptive Certainty Required

Sample Custody must be documented below each time samples change possession, including courier delivery.

Relinquished by Sampler:	Date Time:	Received by:	Relinquished by:	Date Time:	Received by:
1 Ryan M Bouldin	11-30-04 2000	1 [signature] 12/1/04 10:05	2 [signature]	12/1/04 [signature]	2 [signature]
3		3	4		4
5		5	Seal #	Preserved where applicable ☐	On Ice ☐ Temp. 2.5 C

3.1 3

M43544: Chain of Custody
Page 3 of 3

MADEP VPH FORM

Matrix	Aqueous ☑	Soil ☐	Sediment ☐	Other ☐			
Containers	Satisfactory ☑	Broken ☐	Leaking ☐				
Aqueous Preservatives	N/A ☐	pH <= 2 ☑	pH > 2 ☐				
Temperature	Received on Ice ☐	Received at 4 Deg. C ☐	Other ☑	Rec'd at 2.5 deg C			
Methanol	N/A						

Method for Ranges: MADEP VPH REV 1.1
Method for Target Analytes: MADEP VPH REV 1.1
VPH Surrogate Standards
PID: 2,5-Dibromotoluene
FID: 2,5-Dibromotoluene

Client ID: MW-33 **Lab ID:** M43544-1
Date Collected: 11/30/2004 **Date Received:** 12/1/2004

Date Extracted:	First Date Run:	Last Date Run:
N/A	12/3/2004	N/A
% Solids:	**Low Dilution:**	**High Dilution:**
N/A	1	N/A

Unadjusted Ranges	CAS #	Elution Range	Units	Result	RDL	Q
C5- C8 Aliphatics (Unadj.)		N/A	ug/l	ND [A]	50	
C9- C10 Aromatics (Unadj.)		N/A	ug/l	ND [A]	50	
C9- C12 Aliphatics (Unadj.)		N/A	ug/l	ND [A]	50	
Target Analytes						
Ethylbenzene	100-41-4	C9-C12	ug/l	ND	2	
Toluene	108-88-3	C5-C8	ug/l	ND	2	
Methyl Tert Butyl Ether	1634-04-4	C5-C8	ug/l	ND	2	
Benzene	71-43-2	C5-C8	ug/l	ND	2	
Naphthalene	91-20-3	N/A	ug/l	ND	3	
o-Xylene	95-47-6	C9-C12	ug/l	ND	2	
m,p-Xylene		C9-C12	ug/l	ND	2	
Adjusted Ranges						
C5- C8 Aliphatics		N/A	ug/l	ND [B]	50	
C9- C12 Aliphatics		N/A	ug/l	ND [C]	50	

Surrogate Recoveries			Acceptance Range
FID:2,5-Dibromotoluene	%	114	70-130 %
PID:2,5-Dibromotoluene	%	99	70-130 %

Footnotes

A Hydrocarbon Range data exclude concentrations of any surrogate(s) and/or internal standards eluting in that range

B Hydrocarbon Range data exclude concentrations of any surrogate(s) and/or internal standards eluting in that range. C5-C8 Aliphatic Hydrocarbons exclude the concentration of Target Analytes eluting in that range.

C Hydrocarbon Range data exclude concentrations of any surrogate(s) and/or internal standards eluting in that range. C9-C12 aliphatic Hydrocarbons exclude conc of Target Analytes eluting in that range AND concentration of C9-C10 Aromatic Hydrocarbons.

Z A 'J' qualifier indicates an estimated value

Were all QA/QC procedures REQUIRED by the VPH Method followed? ☑ Yes ☐ No- Details Attatched
Were all performance/acceptance standards for required QA/QC procedures achieved? ☑ Yes ☐ No- Details Attatched
Were any significant modifications made to the VPH method, as specified in Sect. 11.3? ☑ No ☐ Yes- Details Attatched

I attest under the pains and penalties of perjury that, based upon my inquiry of those individuals immediately responsible for obtaining the information, the material contained in this report is, to the best of my knowledge and belief, accurate and complete.

Signature Postition Laboratory Director

Printed Name Reza Tand Date 12/10/2004

ACCUTEST Laboratories M43544

3.2 3

MADEP VPH FORM

Matrix	Aqueous ☑	Soil ☐	Sediment ☐	Other ☐			
Containers	Satisfactory ☑	Broken ☐	Leaking ☐				
Aqueous Preservatives	N/A ☐	pH <= 2 ☑	pH > 2 ☐				
Temperature	Received on Ice ☐	Received at 4 Deg. C ☐	Other ☑	Rec'd at 2.5 deg C			
Methanol	N/A						

Method for Ranges: MADEP VPH REV 1.1
Method for Target Analytes: MADEP VPH REV 1.1
VPH Surrogate Standards
PID: 2,5-Dibromotoluene
FID: 2,5-Dibromotoluene

Client ID: DUP-1 **Lab ID:** M43544-10
Date Collected: 11/30/2004 **Date Received:** 12/1/2004

Date Extracted:	First Date Run:	Last Date Run:
N/A	12/3/2004	N/A
% Solids:	**Low Dilution:**	**High Dilution:**
N/A	1	N/A

Unadjusted Ranges	CAS #	Elution Range	Units	Result	RDL	Q
C5- C8 Aliphatics (Unadj.)		N/A	ug/l	ND [A]	50	
C9- C10 Aromatics (Unadj.)		N/A	ug/l	ND [A]	50	
C9- C12 Aliphatics (Unadj.)		N/A	ug/l	ND [A]	50	
Target Analytes						
Ethylbenzene	100-41-4	C9-C12	ug/l	ND	2	
Toluene	108-88-3	C5-C8	ug/l	ND	2	
Methyl Tert Butyl Ether	1634-04-4	C5-C8	ug/l	ND	2	
Benzene	71-43-2	C5-C8	ug/l	ND	2	
Naphthalene	91-20-3	N/A	ug/l	ND	3	
o-Xylene	95-47-6	C9-C12	ug/l	ND	2	
m,p-Xylene		C9-C12	ug/l	ND	2	
Adjusted Ranges						
C5- C8 Aliphatics		N/A	ug/l	ND [B]	50	
C9- C12 Aliphatics		N/A	ug/l	ND [C]	50	

Surrogate Recoveries			Acceptance Range
FID:2,5-Dibromotoluene	%	109	70-130 %
PID:2,5-Dibromotoluene	%	92	70-130 %

Footnotes

A Hydrocarbon Range data exclude concentrations of any surrogate(s) and/or internal standards eluting in that range

B Hydrocarbon Range data exclude concentrations of any surrogate(s) and/or internal standards eluting in that range. C5-C8 Aliphatic Hydrocarbons exclude the concentration of Target Analytes eluting in that range.

C Hydrocarbon Range data exclude concentrations of any surrogate(s) and/or internal standards eluting in that range. C9-C12 aliphatic Hydrocarbons exclude conc of Target Analytes eluting in that range AND concentration of C9-C10 Aromatic Hydrocarbons.

Z A 'J' qualifier indicates an estimated value

Were all QA/QC procedures REQUIRED by the VPH Method followed? ☑ Yes ☐ No- Details Attatched
Were all performance/acceptance standards for required QA/QC procedures achieved? ☑ Yes ☐ No- Details Attatched
Were any significant modifications made to the VPH method, as specified in Sect. 11.3? ☑ No ☐ Yes- Details Attatched

I attest under the pains and penalties of perjury that, based upon my inquiry of those individuals immediately responsible for obtaining the information, the material contained in this report is, to the best of my knowledge and belief, accurate and complete.

Signature Postition Laboratory Director

Printed Name Reza Tand Date 12/10/2004

ACCUTEST Laboratories M43544

MADEP VPH FORM

Matrix	Aqueous ☑	Soil ☐	Sediment ☐	Other ☐			
Containers	Satisfactory ☑	Broken ☐	Leaking ☐				
Aqueous Preservatives	N/A ☐	pH <= 2 ☑	pH > 2 ☐				
Temperature	Received on Ice ☐	Received at 4 Deg. C ☐	Other ☑	Rec'd at 2.5 deg C			
Methanol	N/A						

Method for Ranges: MADEP VPH REV 1.1
Method for Target Analytes: MADEP VPH REV 1.1
VPH Surrogate Standards
PID: 2,5-Dibromotoluene
FID: 2,5-Dibromotoluene

Client ID: MW-19 **Lab ID:** M43544-11
Date Collected: 11/30/2004 **Date Received:** 12/1/2004

Date Extracted:	First Date Run:	Last Date Run:
N/A	12/3/2004	N/A
% Solids:	**Low Dilution:**	**High Dilution:**
N/A	1	N/A

Unadjusted Ranges	CAS #	Elution Range	Units	Result	RDL	Q
C5- C8 Aliphatics (Unadj.)		N/A	ug/l	ND A	50	
C9- C10 Aromatics (Unadj.)		N/A	ug/l	ND A	50	
C9- C12 Aliphatics (Unadj.)		N/A	ug/l	ND A	50	
Target Analytes						
Ethylbenzene	100-41-4	C9-C12	ug/l	ND	2	
Toluene	108-88-3	C5-C8	ug/l	ND	2	
Methyl Tert Butyl Ether	1634-04-4	C5-C8	ug/l	ND	2	
Benzene	71-43-2	C5-C8	ug/l	ND	2	
Naphthalene	91-20-3	N/A	ug/l	ND	3	
o-Xylene	95-47-6	C9-C12	ug/l	ND	2	
m,p-Xylene		C9-C12	ug/l	ND	2	
Adjusted Ranges						
C5- C8 Aliphatics		N/A	ug/l	ND B	50	
C9- C12 Aliphatics		N/A	ug/l	ND C	50	

Surrogate Recoveries			Acceptance Range
FID:2,5-Dibromotoluene	%	110	70-130 %
PID:2,5-Dibromotoluene	%	94	70-130 %

Footnotes

A Hydrocarbon Range data exclude concentrations of any surrogate(s) and/or internal standards eluting in that range

B Hydrocarbon Range data exclude concentrations of any surrogate(s) and/or internal standards eluting in that range. C5-C8 Aliphatic Hydrocarbons exclude the concentration of Target Analytes eluting in that range.

C Hydrocarbon Range data exclude concentrations of any surrogate(s) and/or internal standards eluting in that range. C9-C12 aliphatic Hydrocarbons exclude conc of Target Analytes eluting in that range AND concentration of C9-C10 Aromatic Hydrocarbons.

Z A 'J' qualifier indicates an estimated value

Were all QA/QC procedures REQUIRED by the VPH Method followed?	☑ Yes ☐	No- Details Attatched
Were all performance/acceptance standards for required QA/QC procedures achieved?	☑ Yes ☐	No- Details Attatched
Were any significant modifications made to the VPH method, as specified in Sect. 11.3?	☑ No ☐	Yes- Details Attatched

I attest under the pains and penalties of perjury that, based upon my inquiry of those individuals immediately responsible for obtaining the information, the material contained in this report is, to the best of my knowledge and belief, accurate and complete.

Signature **Postition** Laboratory Director

Printed Name Reza Tand **Date** 12/10/2004

ACCUTEST Laboratories M43544

3.2 3

MADEP VPH FORM

Matrix	Aqueous ☑	Soil ☐	Sediment ☐	Other ☐			
Containers	Satisfactory ☑	Broken ☐	Leaking ☐				
Aqueous Preservatives	N/A ☐	pH <= 2 ☑	pH > 2 ☐				
Temperature	Received on Ice ☐	Received at 4 Deg. C ☐	Other ☑	Rec'd at 2.5 deg C			
Methanol	N/A						

Method for Ranges: MADEP VPH REV 1.1
Method for Target Analytes: MADEP VPH REV 1.1
VPH Surrogate Standards
PID: 2,5-Dibromotoluene
FID: 2,5-Dibromotoluene

Client ID: MW-15 **Lab ID:** M43544-12
Date Collected: 11/30/2004 **Date Received:** 12/1/2004

Date Extracted:	First Date Run:	Last Date Run:
N/A	12/3/2004	N/A
% Solids:	**Low Dilution:**	**High Dilution:**
N/A	1	N/A

Unadjusted Ranges	CAS #	Elution Range	Units	Result	RDL	Q
C5- C8 Aliphatics (Unadj.)		N/A	ug/l	534 A	50	
C9- C10 Aromatics (Unadj.)		N/A	ug/l	ND A	50	
C9- C12 Aliphatics (Unadj.)		N/A	ug/l	ND A	50	
Target Analytes						
Ethylbenzene	100-41-4	C9-C12	ug/l	ND	2	
Toluene	108-88-3	C5-C8	ug/l	ND	2	
Methyl Tert Butyl Ether	1634-04-4	C5-C8	ug/l	581	2	
Benzene	71-43-2	C5-C8	ug/l	ND	2	
Naphthalene	91-20-3	N/A	ug/l	ND	3	
o-Xylene	95-47-6	C9-C12	ug/l	ND	2	
m,p-Xylene		C9-C12	ug/l	ND	2	
Adjusted Ranges						
C5- C8 Aliphatics		N/A	ug/l	ND B	50	
C9- C12 Aliphatics		N/A	ug/l	ND C	50	

Surrogate Recoveries			Acceptance Range
FID:2,5-Dibromotoluene	%	110	70-130 %
PID:2,5-Dibromotoluene	%	95	70-130 %

Footnotes

A Hydrocarbon Range data exclude concentrations of any surrogate(s) and/or internal standards eluting in that range

B Hydrocarbon Range data exclude concentrations of any surrogate(s) and/or internal standards eluting in that range. C5-C8 Aliphatic Hydrocarbons exclude the concentration of Target Analytes eluting in that range.

C Hydrocarbon Range data exclude concentrations of any surrogate(s) and/or internal standards eluting in that range. C9-C12 aliphatic Hydrocarbons exclude conc of Target Analytes eluting in that range AND concentration of C9-C10 Aromatic Hydrocarbons.

Z A 'J' qualifier indicates an estimated value

Were all QA/QC procedures REQUIRED by the VPH Method followed? ☑ Yes ☐ No- Details Attatched
Were all performance/acceptance standards for required QA/QC procedures achieved? ☑ Yes ☐ No- Details Attatched
Were any significant modifications made to the VPH method, as specified in Sect. 11.3? ☑ No ☐ Yes- Details Attatched

I attest under the pains and penalties of perjury that, based upon my inquiry of those individuals immediately responsible for obtaining the information, the material contained in this report is, to the best of my knowledge and belief, accurate and complete.

Signature Postition Laboratory Director

Printed Name Reza Tand Date 12/10/2004

MADEP VPH FORM

Matrix	Aqueous ☑	Soil ☐	Sediment ☐	Other ☐			
Containers	Satisfactory ☑	Broken ☐	Leaking ☐				
Aqueous Preservatives	N/A ☐	pH <= 2 ☑	pH > 2 ☐				
Temperature	Received on Ice ☐	Received at 4 Deg. C ☐	Other ☑	Rec'd at 2.5 deg C			
Methanol	N/A						

Method for Ranges: MADEP VPH REV 1.1
Method for Target Analytes: MADEP VPH REV 1.1
VPH Surrogate Standards
PID: 2,5-Dibromotoluene
FID: 2,5-Dibromotoluene

Client ID: MW-16 **Lab ID:** M43544-13
Date Collected: 11/30/2004 **Date Received:** 12/1/2004

Date Extracted:	First Date Run:	Last Date Run:
N/A	12/3/2004	N/A
% Solids:	**Low Dilution:**	**High Dilution:**
N/A	1	N/A

Unadjusted Ranges	CAS #	Elution Range	Units	Result	RDL	Q
C5- C8 Aliphatics (Unadj.)		N/A	ug/l	510 A	50	
C9- C10 Aromatics (Unadj.)		N/A	ug/l	ND A	50	
C9- C12 Aliphatics (Unadj.)		N/A	ug/l	ND A	50	
Target Analytes						
Ethylbenzene	100-41-4	C9-C12	ug/l	ND	2	
Toluene	108-88-3	C5-C8	ug/l	ND	2	
Methyl Tert Butyl Ether	1634-04-4	C5-C8	ug/l	569	2	
Benzene	71-43-2	C5-C8	ug/l	ND	2	
Naphthalene	91-20-3	N/A	ug/l	ND	3	
o-Xylene	95-47-6	C9-C12	ug/l	ND	2	
m,p-Xylene		C9-C12	ug/l	ND	2	
Adjusted Ranges						
C5- C8 Aliphatics		N/A	ug/l	ND B	50	
C9- C12 Aliphatics		N/A	ug/l	ND C	50	

Surrogate Recoveries			Acceptance Range
FID:2,5-Dibromotoluene	%	115	70-130 %
PID:2,5-Dibromotoluene	%	98	70-130 %

Footnotes

A Hydrocarbon Range data exclude concentrations of any surrogate(s) and/or internal standards eluting in that range

B Hydrocarbon Range data exclude concentrations of any surrogate(s) and/or internal standards eluting in that range. C5-C8 Aliphatic Hydrocarbons exclude the concentration of Target Analytes eluting in that range.

C Hydrocarbon Range data exclude concentrations of any surrogate(s) and/or internal standards eluting in that range. C9-C12 aliphatic Hydrocarbons exclude conc of Target Analytes eluting in that range AND concentration of C9-C10 Aromatic Hydrocarbons.

Z A 'J' qualifier indicates an estimated value

Were all QA/QC procedures REQUIRED by the VPH Method followed? ☑ Yes ☐ No- Details Attatched
Were all performance/acceptance standards for required QA/QC procedures achieved? ☑ Yes ☐ No- Details Attatched
Were any significant modifications made to the VPH method, as specified in Sect. 11.3? ☑ No ☐ Yes- Details Attatched

I attest under the pains and penalties of perjury that, based upon my inquiry of those individuals immediately responsible for obtaining the information, the material contained in this report is, to the best of my knowledge and belief, accurate and complete.

Signature Postition Laboratory Director

Printed Name Reza Tand Date 12/10/2004

ACCUTEST Laboratories M43544

3.2 3

MADEP VPH FORM

Matrix	Aqueous ☑	Soil ☐	Sediment ☐	Other ☐			
Containers	Satisfactory ☑	Broken ☐	Leaking ☐				
Aqueous Preservatives	N/A ☐	pH <= 2 ☑	pH > 2 ☐				
Temperature	Received on Ice ☐	Received at 4 Deg. C ☐	Other ☑	Rec'd at 2.5 deg C			
Methanol	N/A						

Method for Ranges: MADEP VPH REV 1.1
Method for Target Analytes: MADEP VPH REV 1.1
VPH Surrogate Standards
PID: 2,5-Dibromotoluene
FID: 2,5-Dibromotoluene

Client ID: MW-28 **Lab ID:** M43544-14
Date Collected: 11/30/2004 **Date Received:** 12/1/2004

Date Extracted:	First Date Run:	Last Date Run:
N/A	12/4/2004	N/A
% Solids:	**Low Dilution:**	**High Dilution:**
N/A	1	N/A

Unadjusted Ranges	CAS #	Elution Range	Units	Result	RDL	Q
C5- C8 Aliphatics (Unadj.)		N/A	ug/l	558 A	50	
C9- C10 Aromatics (Unadj.)		N/A	ug/l	ND A	50	
C9- C12 Aliphatics (Unadj.)		N/A	ug/l	ND A	50	
Target Analytes						
Ethylbenzene	100-41-4	C9-C12	ug/l	ND	2	
Toluene	108-88-3	C5-C8	ug/l	ND	2	
Methyl Tert Butyl Ether	1634-04-4	C5-C8	ug/l	600	2	
Benzene	71-43-2	C5-C8	ug/l	ND	2	
Naphthalene	91-20-3	N/A	ug/l	ND	3	
o-Xylene	95-47-6	C9-C12	ug/l	ND	2	
m,p-Xylene		C9-C12	ug/l	4.4	2	
Adjusted Ranges						
C5- C8 Aliphatics		N/A	ug/l	ND B	50	
C9- C12 Aliphatics		N/A	ug/l	ND C	50	

Surrogate Recoveries			Acceptance Range
FID:2,5-Dibromotoluene	%	111	70-130 %
PID:2,5-Dibromotoluene	%	99	70-130 %

Footnotes

A Hydrocarbon Range data exclude concentrations of any surrogate(s) and/or internal standards eluting in that range

B Hydrocarbon Range data exclude concentrations of any surrogate(s) and/or internal standards eluting in that range. C5-C8 Aliphatic Hydrocarbons exclude the concentration of Target Analytes eluting in that range.

C Hydrocarbon Range data exclude concentrations of any surrogate(s) and/or internal standards eluting in that range. C9-C12 aliphatic Hydrocarbons exclude conc of Target Analytes eluting in that range AND concentration of C9-C10 Aromatic Hydrocarbons.

Z A 'J' qualifier indicates an estimated value

Were all QA/QC procedures REQUIRED by the VPH Method followed? ☑ Yes ☐ No- Details Attatched
Were all performance/acceptance standards for required QA/QC procedures achieved? ☑ Yes ☐ No- Details Attatched
Were any significant modifications made to the VPH method, as specified in Sect. 11.3? ☑ No ☐ Yes- Details Attatched

I attest under the pains and penalties of perjury that, based upon my inquiry of those individuals immediately responsible for obtaining the information, the material contained in this report is, to the best of my knowledge and belief, accurate and complete.

Signature Postition Laboratory Director

Printed Name Reza Tand Date 12/10/2004

ACCUTEST Laboratories M43544

MADEP VPH FORM

Matrix	Aqueous ☑	Soil ☐	Sediment ☐	Other ☐			
Containers	Satisfactory ☑	Broken ☐	Leaking ☐				
Aqueous Preservatives	N/A ☐	pH <= 2 ☑	pH > 2 ☐				
Temperature	Received on Ice ☐	Received at 4 Deg. C ☐	Other ☑	Rec'd at 2.5 deg C			
Methanol	N/A						

Method for Ranges: MADEP VPH REV 1.1
Method for Target Analytes: MADEP VPH REV 1.1
VPH Surrogate Standards
PID: 2,5-Dibromotoluene
FID: 2,5-Dibromotoluene

Client ID: MW-29 **Lab ID:** M43544-15
Date Collected: 11/30/2004 **Date Received:** 12/1/2004

Date Extracted:	First Date Run:	Last Date Run:
N/A	12/4/2004	N/A
% Solids:	**Low Dilution:**	**High Dilution:**
N/A	1	N/A

Unadjusted Ranges	CAS #	Elution Range	Units	Result	RDL	Q
C5- C8 Aliphatics (Unadj.)		N/A	ug/l	2400 A	50	
C9- C10 Aromatics (Unadj.)		N/A	ug/l	836 A	50	
C9- C12 Aliphatics (Unadj.)		N/A	ug/l	2300 A	50	
Target Analytes						
Ethylbenzene	100-41-4	C9-C12	ug/l	140	2	
Toluene	108-88-3	C5-C8	ug/l	127	2	
Methyl Tert Butyl Ether	1634-04-4	C5-C8	ug/l	1500	2	
Benzene	71-43-2	C5-C8	ug/l	2.9	2	
Naphthalene	91-20-3	N/A	ug/l	51.4	3	
o-Xylene	95-47-6	C9-C12	ug/l	150	2	
m,p-Xylene		C9-C12	ug/l	402	2	
Adjusted Ranges						
C5- C8 Aliphatics		N/A	ug/l	769 B	50	
C9- C12 Aliphatics		N/A	ug/l	770 C	50	

Surrogate Recoveries			Acceptance Range
FID:2,5-Dibromotoluene	%	126	70-130 %
PID:2,5-Dibromotoluene	%	103	70-130 %

Footnotes

A Hydrocarbon Range data exclude concentrations of any surrogate(s) and/or internal standards eluting in that range

B Hydrocarbon Range data exclude concentrations of any surrogate(s) and/or internal standards eluting in that range. C5-C8 Aliphatic Hydrocarbons exclude the concentration of Target Analytes eluting in that range.

C Hydrocarbon Range data exclude concentrations of any surrogate(s) and/or internal standards eluting in that range. C9-C12 aliphatic Hydrocarbons exclude conc of Target Analytes eluting in that range AND concentration of C9-C10 Aromatic Hydrocarbons.

Z A 'J' qualifier indicates an estimated value

Were all QA/QC procedures REQUIRED by the VPH Method followed? ☑ Yes ☐ No- Details Attatched
Were all performance/acceptance standards for required QA/QC procedures achieved? ☑ Yes ☐ No- Details Attatched
Were any significant modifications made to the VPH method, as specified in Sect. 11.3? ☑ No ☐ Yes- Details Attatched

I attest under the pains and penalties of perjury that, based upon my inquiry of those individuals immediately responsible for obtaining the information, the material contained in this report is, to the best of my knowledge and belief, accurate and complete.

Signature [signature] Postition Laboratory Director

Printed Name Reza Tand Date 12/10/2004

ACCUTEST Laboratories M43544

MADEP VPH FORM

Matrix	Aqueous ☑	Soil ☐	Sediment ☐	Other ☐			
Containers	Satisfactory ☑	Broken ☐	Leaking ☐				
Aqueous Preservatives	N/A ☐	pH <= 2 ☑	pH > 2 ☐				
Temperature	Received on Ice ☐	Received at 4 Deg. C ☐	Other ☑	Rec'd at 2.5 deg C			
Methanol	N/A						

Method for Ranges: MADEP VPH REV 1.1
Method for Target Analytes: MADEP VPH REV 1.1
VPH Surrogate Standards
PID: 2,5-Dibromotoluene
FID: 2,5-Dibromotoluene

Client ID: MW-27 **Lab ID:** M43544-16
Date Collected: 11/30/2004 **Date Received:** 12/1/2004

Date Extracted:	First Date Run:	Last Date Run:
N/A	12/4/2004	N/A
% Solids:	**Low Dilution:**	**High Dilution:**
N/A	1	N/A

Unadjusted Ranges	CAS #	Elution Range	Units	Result	RDL	Q
C5- C8 Aliphatics (Unadj.)		N/A	ug/l	91.6 A	50	
C9- C10 Aromatics (Unadj.)		N/A	ug/l	ND A	50	
C9- C12 Aliphatics (Unadj.)		N/A	ug/l	ND A	50	
Target Analytes						
Ethylbenzene	100-41-4	C9-C12	ug/l	ND	2	
Toluene	108-88-3	C5-C8	ug/l	ND	2	
Methyl Tert Butyl Ether	1634-04-4	C5-C8	ug/l	86	2	
Benzene	71-43-2	C5-C8	ug/l	ND	2	
Naphthalene	91-20-3	N/A	ug/l	ND	3	
o-Xylene	95-47-6	C9-C12	ug/l	ND	2	
m,p-Xylene		C9-C12	ug/l	ND	2	
Adjusted Ranges						
C5- C8 Aliphatics		N/A	ug/l	ND B	50	
C9- C12 Aliphatics		N/A	ug/l	ND C	50	

Surrogate Recoveries			Acceptance Range
FID:2,5-Dibromotoluene	%	120	70-130 %
PID:2,5-Dibromotoluene	%	101	70-130 %

Footnotes

A Hydrocarbon Range data exclude concentrations of any surrogate(s) and/or internal standards eluting in that range

B Hydrocarbon Range data exclude concentrations of any surrogate(s) and/or internal standards eluting in that range. C5-C8 Aliphatic Hydrocarbons exclude the concentration of Target Analytes eluting in that range.

C Hydrocarbon Range data exclude concentrations of any surrogate(s) and/or internal standards eluting in that range. C9-C12 aliphatic Hydrocarbons exclude conc of Target Analytes eluting in that range AND concentration of C9-C10 Aromatic Hydrocarbons.

Z A 'J' qualifier indicates an estimated value

Were all QA/QC procedures REQUIRED by the VPH Method followed? ☑ Yes ☐ No- Details Attatched
Were all performance/acceptance standards for required QA/QC procedures achieved? ☑ Yes ☐ No- Details Attatched
Were any significant modifications made to the VPH method, as specified in Sect. 11.3? ☑ No ☐ Yes- Details Attatched

I attest under the pains and penalties of perjury that, based upon my inquiry of those individuals immediately responsible for obtaining the information, the material contained in this report is, to the best of my knowledge and belief, accurate and complete.

Signature Postition Laboratory Director

Printed Name Reza Tand Date 12/10/2004

ACCUTEST Laboratories M43544

MADEP VPH FORM

Matrix	Aqueous ☑	Soil ☐	Sediment ☐	Other ☐			
Containers	Satisfactory ☑	Broken ☐	Leaking ☐				
Aqueous Preservatives	N/A ☐	pH <= 2 ☑	pH > 2 ☐				
Temperature	Received on Ice ☐	Received at 4 Deg. C ☐	Other ☑	Rec'd at 2.5 deg C			
Methanol	N/A						

Method for Ranges: MADEP VPH REV 1.1
Method for Target Analytes: MADEP VPH REV 1.1
VPH Surrogate Standards
PID: 2,5-Dibromotoluene
FID: 2,5-Dibromotoluene

Client ID: MW-9 **Lab ID:** M43544-2
Date Collected: 11/30/2004 **Date Received:** 12/1/2004

Date Extracted:	First Date Run:	Last Date Run:
N/A	12/3/2004	N/A
% Solids:	**Low Dilution:**	**High Dilution:**
N/A	1	N/A

Unadjusted Ranges	CAS #	Elution Range	Units	Result	RDL	Q
C5- C8 Aliphatics (Unadj.)		N/A	ug/l	ND [A]	50	
C9- C10 Aromatics (Unadj.)		N/A	ug/l	ND [A]	50	
C9- C12 Aliphatics (Unadj.)		N/A	ug/l	ND [A]	50	
Target Analytes						
Ethylbenzene	100-41-4	C9-C12	ug/l	ND	2	
Toluene	108-88-3	C5-C8	ug/l	ND	2	
Methyl Tert Butyl Ether	1634-04-4	C5-C8	ug/l	ND	2	
Benzene	71-43-2	C5-C8	ug/l	ND	2	
Naphthalene	91-20-3	N/A	ug/l	ND	3	
o-Xylene	95-47-6	C9-C12	ug/l	ND	2	
m,p-Xylene		C9-C12	ug/l	ND	2	
Adjusted Ranges						
C5- C8 Aliphatics		N/A	ug/l	ND [B]	50	
C9- C12 Aliphatics		N/A	ug/l	ND [C]	50	

Surrogate Recoveries			Acceptance Range
FID:2,5-Dibromotoluene	%	112	70-130 %
PID:2,5-Dibromotoluene	%	96	70-130 %

Footnotes

A Hydrocarbon Range data exclude concentrations of any surrogate(s) and/or internal standards eluting in that range

B Hydrocarbon Range data exclude concentrations of any surrogate(s) and/or internal standards eluting in that range. C5-C8 Aliphatic Hydrocarbons exclude the concentration of Target Analytes eluting in that range.

C Hydrocarbon Range data exclude concentrations of any surrogate(s) and/or internal standards eluting in that range. C9-C12 aliphatic Hydrocarbons exclude conc of Target Analytes eluting in that range AND concentration of C9-C10 Aromatic Hydrocarbons.

Z A 'J' qualifier indicates an estimated value

Were all QA/QC procedures REQUIRED by the VPH Method followed? ☑ Yes ☐ No- Details Attatched
Were all performance/acceptance standards for required QA/QC procedures achieved? ☑ Yes ☐ No- Details Attatched
Were any significant modifications made to the VPH method, as specified in Sect. 11.3? ☑ No ☐ Yes- Details Attatched

I attest under the pains and penalties of perjury that, based upon my inquiry of those individuals immediately responsible for obtaining the information, the material contained in this report is, to the best of my knowledge and belief, accurate and complete.

Signature Postition Laboratory Director

Printed Name Reza Tand Date 12/10/2004

ACCUTEST Laboratories M43544

MADEP VPH FORM

Matrix	Aqueous ☑	Soil ☐	Sediment ☐	Other ☐			
Containers	Satisfactory ☑	Broken ☐	Leaking ☐				
Aqueous Preservatives	N/A ☐	pH <= 2 ☑	pH > 2 ☐				
Temperature	Received on Ice ☐	Received at 4 Deg. C ☐	Other ☑	Rec'd at 2.5 deg C			
Methanol	N/A						

Method for Ranges: MADEP VPH REV 1.1
Method for Target Analytes: MADEP VPH REV 1.1
VPH Surrogate Standards
PID: 2,5-Dibromotoluene
FID: 2,5-Dibromotoluene

Client ID: MW-6 **Lab ID:** M43544-24
Date Collected: 11/30/2004 **Date Received:** 12/1/2004

Date Extracted:	First Date Run:	Last Date Run:
N/A	12/4/2004	N/A
% Solids:	**Low Dilution:**	**High Dilution:**
N/A	1	N/A

Unadjusted Ranges	CAS #	Elution Range	Units	Result	RDL	Q
C5- C8 Aliphatics (Unadj.)		N/A	ug/l	ND [A]	50	
C9- C10 Aromatics (Unadj.)		N/A	ug/l	ND [A]	50	
C9- C12 Aliphatics (Unadj.)		N/A	ug/l	ND [A]	50	
Target Analytes						
Ethylbenzene	100-41-4	C9-C12	ug/l	ND	2	
Toluene	108-88-3	C5-C8	ug/l	ND	2	
Methyl Tert Butyl Ether	1634-04-4	C5-C8	ug/l	ND	2	
Benzene	71-43-2	C5-C8	ug/l	ND	2	
Naphthalene	91-20-3	N/A	ug/l	ND	3	
o-Xylene	95-47-6	C9-C12	ug/l	ND	2	
m,p-Xylene		C9-C12	ug/l	ND	2	
Adjusted Ranges						
C5- C8 Aliphatics		N/A	ug/l	ND [B]	50	
C9- C12 Aliphatics		N/A	ug/l	ND [C]	50	

Surrogate Recoveries			Acceptance Range
FID:2,5-Dibromotoluene	%	85	70-130 %
PID:2,5-Dibromotoluene	%	84	70-130 %

Footnotes

A Hydrocarbon Range data exclude concentrations of any surrogate(s) and/or internal standards eluting in that range

B Hydrocarbon Range data exclude concentrations of any surrogate(s) and/or internal standards eluting in that range. C5-C8 Aliphatic Hydrocarbons exclude the concentration of Target Analytes eluting in that range.

C Hydrocarbon Range data exclude concentrations of any surrogate(s) and/or internal standards eluting in that range. C9-C12 aliphatic Hydrocarbons exclude conc of Target Analytes eluting in that range AND concentration of C9-C10 Aromatic Hydrocarbons.

Z A 'J' qualifier indicates an estimated value

Were all QA/QC procedures REQUIRED by the VPH Method followed? ☑ Yes ☐ No- Details Attatched
Were all performance/acceptance standards for required QA/QC procedures achieved? ☑ Yes ☐ No- Details Attatched
Were any significant modifications made to the VPH method, as specified in Sect. 11.3? ☑ No ☐ Yes- Details Attatched

I attest under the pains and penalties of perjury that, based upon my inquiry of those individuals immediately responsible for obtaining the information, the material contained in this report is, to the best of my knowledge and belief, accurate and complete.

Signature Postition Laboratory Director

Printed Name Reza Tand Date 12/10/2004

ACCUTEST Laboratories M43544

MADEP VPH FORM

Matrix	Aqueous ☑	Soil ☐	Sediment ☐	Other ☐			
Containers	Satisfactory ☑	Broken ☐	Leaking ☐				
Aqueous Preservatives	N/A ☐	pH <= 2 ☑	pH > 2 ☐				
Temperature	Received on Ice ☐	Received at 4 Deg. C ☐	Other ☑	Rec'd at 2.5 deg C			
Methanol	N/A						

Method for Ranges: MADEP VPH REV 1.1
Method for Target Analytes: MADEP VPH REV 1.1
VPH Surrogate Standards
PID: 2,5-Dibromotoluene
FID: 2,5-Dibromotoluene

Client ID: MW-7 **Lab ID:** M43544-25
Date Collected: 11/30/2004 **Date Received:** 12/1/2004

Date Extracted:	First Date Run:	Last Date Run:
N/A	12/4/2004	N/A
% Solids:	**Low Dilution:**	**High Dilution:**
N/A	1	N/A

Unadjusted Ranges	CAS #	Elution Range	Units	Result	RDL	Q
C5- C8 Aliphatics (Unadj.)		N/A	ug/l	ND [A]	50	
C9- C10 Aromatics (Unadj.)		N/A	ug/l	ND [A]	50	
C9- C12 Aliphatics (Unadj.)		N/A	ug/l	ND [A]	50	
Target Analytes						
Ethylbenzene	100-41-4	C9-C12	ug/l	ND	2	
Toluene	108-88-3	C5-C8	ug/l	ND	2	
Methyl Tert Butyl Ether	1634-04-4	C5-C8	ug/l	ND	2	
Benzene	71-43-2	C5-C8	ug/l	ND	2	
Naphthalene	91-20-3	N/A	ug/l	ND	3	
o-Xylene	95-47-6	C9-C12	ug/l	ND	2	
m,p-Xylene		C9-C12	ug/l	ND	2	
Adjusted Ranges						
C5- C8 Aliphatics		N/A	ug/l	ND [B]	50	
C9- C12 Aliphatics		N/A	ug/l	ND [C]	50	

Surrogate Recoveries			Acceptance Range
FID:2,5-Dibromotoluene	%	83	70-130 %
PID:2,5-Dibromotoluene	%	83	70-130 %

Footnotes

A Hydrocarbon Range data exclude concentrations of any surrogate(s) and/or internal standards eluting in that range

B Hydrocarbon Range data exclude concentrations of any surrogate(s) and/or internal standards eluting in that range. C5-C8 Aliphatic Hydrocarbons exclude the concentration of Target Analytes eluting in that range.

C Hydrocarbon Range data exclude concentrations of any surrogate(s) and/or internal standards eluting in that range. C9-C12 aliphatic Hydrocarbons exclude conc of Target Analytes eluting in that range AND concentration of C9-C10 Aromatic Hydrocarbons.

Z A 'J' qualifier indicates an estimated value

Were all QA/QC procedures REQUIRED by the VPH Method followed? ☑ Yes ☐ No- Details Attatched
Were all performance/acceptance standards for required QA/QC procedures achieved? ☑ Yes ☐ No- Details Attatched
Were any significant modifications made to the VPH method, as specified in Sect. 11.3? ☑ No ☐ Yes- Details Attatched

I attest under the pains and penalties of perjury that, based upon my inquiry of those individuals immediately responsible for obtaining the information, the material contained in this report is, to the best of my knowledge and belief, accurate and complete.

Signature Postition Laboratory Director

Printed Name Reza Tand Date 12/10/2004

ACCUTEST Laboratories M43544

3.2 3

MADEP VPH FORM

Matrix	Aqueous ☑	Soil ☐	Sediment ☐	Other ☐			
Containers	Satisfactory ☑	Broken ☐	Leaking ☐				
Aqueous Preservatives	N/A ☐	pH <= 2 ☑	pH > 2 ☐				
Temperature	Received on Ice ☐	Received at 4 Deg. C ☐	Other ☑	Rec'd at 2.5 deg C			
Methanol	N/A						

Method for Ranges: MADEP VPH REV 1.1
Method for Target Analytes: MADEP VPH REV 1.1
VPH Surrogate Standards
PID: 2,5-Dibromotoluene
FID: 2,5-Dibromotoluene

Client ID: MW-35 **Lab ID:** M43544-3
Date Collected: 11/30/2004 **Date Received:** 12/1/2004

Date Extracted: N/A **First Date Run:** 12/3/2004 **Last Date Run:** N/A
% Solids: N/A **Low Dilution:** 1 **High Dilution:** N/A

Unadjusted Ranges	CAS #	Elution Range	Units	Result	RDL	Q
C5- C8 Aliphatics (Unadj.)		N/A	ug/l	ND [A]	50	
C9- C10 Aromatics (Unadj.)		N/A	ug/l	ND [A]	50	
C9- C12 Aliphatics (Unadj.)		N/A	ug/l	ND [A]	50	
Target Analytes						
Ethylbenzene	100-41-4	C9-C12	ug/l	ND	2	
Toluene	108-88-3	C5-C8	ug/l	ND	2	
Methyl Tert Butyl Ether	1634-04-4	C5-C8	ug/l	ND	2	
Benzene	71-43-2	C5-C8	ug/l	ND	2	
Naphthalene	91-20-3	N/A	ug/l	ND	3	
o-Xylene	95-47-6	C9-C12	ug/l	ND	2	
m,p-Xylene		C9-C12	ug/l	ND	2	
Adjusted Ranges						
C5- C8 Aliphatics		N/A	ug/l	ND [B]	50	
C9- C12 Aliphatics		N/A	ug/l	ND [C]	50	

Surrogate Recoveries			Acceptance Range
FID:2,5-Dibromotoluene	%	119	70-130 %
PID:2,5-Dibromotoluene	%	102	70-130 %

Footnotes

A Hydrocarbon Range data exclude concentrations of any surrogate(s) and/or internal standards eluting in that range

B Hydrocarbon Range data exclude concentrations of any surrogate(s) and/or internal standards eluting in that range. C5-C8 Aliphatic Hydrocarbons exclude the concentration of Target Analytes eluting in that range.

C Hydrocarbon Range data exclude concentrations of any surrogate(s) and/or internal standards eluting in that range. C9-C12 aliphatic Hydrocarbons exclude conc of Target Analytes eluting in that range AND concentration of C9-C10 Aromatic Hydrocarbons.

Z A 'J' qualifier indicates an estimated value

Were all QA/QC procedures REQUIRED by the VPH Method followed? ☑ Yes ☐ No- Details Attatched
Were all performance/acceptance standards for required QA/QC procedures achieved? ☑ Yes ☐ No- Details Attatched
Were any significant modifications made to the VPH method, as specified in Sect. 11.3? ☑ No ☐ Yes- Details Attatched

I attest under the pains and penalties of perjury that, based upon my inquiry of those individuals immediately responsible for obtaining the information, the material contained in this report is, to the best of my knowledge and belief, accurate and complete.

Signature Postition Laboratory Director

Printed Name Reza Tand Date 12/10/2004

ACCUTEST Laboratories M43544

MADEP VPH FORM

Matrix	Aqueous ☑	Soil ☐	Sediment ☐	Other ☐			
Containers	Satisfactory ☑	Broken ☐	Leaking ☐				
Aqueous Preservatives	N/A ☐	pH <= 2 ☑	pH > 2 ☐				
Temperature	Received on Ice ☐	Received at 4 Deg. C ☐	Other ☑	Rec'd at 2.5 deg C			
Methanol	N/A						

Method for Ranges: MADEP VPH REV 1.1
Method for Target Analytes: MADEP VPH REV 1.1
VPH Surrogate Standards
PID: 2,5-Dibromotoluene
FID: 2,5-Dibromotoluene

Client ID: MW-36 **Lab ID:** M43544-4
Date Collected: 11/30/2004 **Date Received:** 12/1/2004

Date Extracted:	First Date Run:	Last Date Run:
N/A	12/3/2004	N/A
% Solids:	**Low Dilution:**	**High Dilution:**
N/A	1	N/A

Unadjusted Ranges	CAS #	Elution Range	Units	Result	RDL	Q
C5- C8 Aliphatics (Unadj.)		N/A	ug/l	ND [A]	50	
C9- C10 Aromatics (Unadj.)		N/A	ug/l	ND [A]	50	
C9- C12 Aliphatics (Unadj.)		N/A	ug/l	ND [A]	50	
Target Analytes						
Ethylbenzene	100-41-4	C9-C12	ug/l	ND	2	
Toluene	108-88-3	C5-C8	ug/l	ND	2	
Methyl Tert Butyl Ether	1634-04-4	C5-C8	ug/l	ND	2	
Benzene	71-43-2	C5-C8	ug/l	ND	2	
Naphthalene	91-20-3	N/A	ug/l	ND	3	
o-Xylene	95-47-6	C9-C12	ug/l	ND	2	
m,p-Xylene		C9-C12	ug/l	ND	2	
Adjusted Ranges						
C5- C8 Aliphatics		N/A	ug/l	ND [B]	50	
C9- C12 Aliphatics		N/A	ug/l	ND [C]	50	

Surrogate Recoveries			Acceptance Range
FID:2,5-Dibromotoluene	%	120	70-130 %
PID:2,5-Dibromotoluene	%	102	70-130 %

Footnotes

A Hydrocarbon Range data exclude concentrations of any surrogate(s) and/or internal standards eluting in that range

B Hydrocarbon Range data exclude concentrations of any surrogate(s) and/or internal standards eluting in that range. C5-C8 Aliphatic Hydrocarbons exclude the concentration of Target Analytes eluting in that range.

C Hydrocarbon Range data exclude concentrations of any surrogate(s) and/or internal standards eluting in that range. C9-C12 aliphatic Hydrocarbons exclude conc of Target Analytes eluting in that range AND concentration of C9-C10 Aromatic Hydrocarbons.

Z A 'J' qualifier indicates an estimated value

Were all QA/QC procedures REQUIRED by the VPH Method followed? ☑ Yes ☐ No- Details Attatched
Were all performance/acceptance standards for required QA/QC procedures achieved? ☑ Yes ☐ No- Details Attatched
Were any significant modifications made to the VPH method, as specified in Sect. 11.3? ☑ No ☐ Yes- Details Attatched

I attest under the pains and penalties of perjury that, based upon my inquiry of those individuals immediately responsible for obtaining the information, the material contained in this report is, to the best of my knowledge and belief, accurate and complete.

Signature Postition Laboratory Director

Printed Name Reza Tand Date 12/10/2004

ACCUTEST Laboratories M43544

3.2 3

MADEP VPH FORM

Matrix	Aqueous ☑	Soil ☐	Sediment ☐	Other ☐			
Containers	Satisfactory ☑	Broken ☐	Leaking ☐				
Aqueous Preservatives	N/A ☐	pH <= 2 ☑	pH > 2 ☐				
Temperature	Received on Ice ☐	Received at 4 Deg. C ☐	Other ☑	Rec'd at 2.5 deg C			
Methanol	N/A						

Method for Ranges: MADEP VPH REV 1.1
Method for Target Analytes: MADEP VPH REV 1.1
VPH Surrogate Standards
PID: 2,5-Dibromotoluene
FID: 2,5-Dibromotoluene

Client ID: MW-34 **Lab ID:** M43544-5
Date Collected: 11/30/2004 **Date Received:** 12/1/2004

Date Extracted:	First Date Run:	Last Date Run:
N/A	12/3/2004	N/A
% Solids:	**Low Dilution:**	**High Dilution:**
N/A	1	N/A

Unadjusted Ranges	CAS #	Elution Range	Units	Result	RDL	Q
C5- C8 Aliphatics (Unadj.)		N/A	ug/l	ND [A]	50	
C9- C10 Aromatics (Unadj.)		N/A	ug/l	ND [A]	50	
C9- C12 Aliphatics (Unadj.)		N/A	ug/l	ND [A]	50	
Target Analytes						
Ethylbenzene	100-41-4	C9-C12	ug/l	ND	2	
Toluene	108-88-3	C5-C8	ug/l	ND	2	
Methyl Tert Butyl Ether	1634-04-4	C5-C8	ug/l	ND	2	
Benzene	71-43-2	C5-C8	ug/l	ND	2	
Naphthalene	91-20-3	N/A	ug/l	ND	3	
o-Xylene	95-47-6	C9-C12	ug/l	ND	2	
m,p-Xylene		C9-C12	ug/l	ND	2	
Adjusted Ranges						
C5- C8 Aliphatics		N/A	ug/l	ND [B]	50	
C9- C12 Aliphatics		N/A	ug/l	ND [C]	50	

Surrogate Recoveries			Acceptance Range
FID:2,5-Dibromotoluene	%	111	70-130 %
PID:2,5-Dibromotoluene	%	94	70-130 %

Footnotes

A Hydrocarbon Range data exclude concentrations of any surrogate(s) and/or internal standards eluting in that range

B Hydrocarbon Range data exclude concentrations of any surrogate(s) and/or internal standards eluting in that range. C5-C8 Aliphatic Hydrocarbons exclude the concentration of Target Analytes eluting in that range.

C Hydrocarbon Range data exclude concentrations of any surrogate(s) and/or internal standards eluting in that range. C9-C12 aliphatic Hydrocarbons exclude conc of Target Analytes eluting in that range AND concentration of C9-C10 Aromatic Hydrocarbons.

Z A 'J' qualifier indicates an estimated value

Were all QA/QC procedures REQUIRED by the VPH Method followed? ☑ Yes ☐ No- Details Attatched
Were all performance/acceptance standards for required QA/QC procedures achieved? ☑ Yes ☐ No- Details Attatched
Were any significant modifications made to the VPH method, as specified in Sect. 11.3? ☑ No ☐ Yes- Details Attatched

I attest under the pains and penalties of perjury that, based upon my inquiry of those individuals immediately responsible for obtaining the information, the material contained in this report is, to the best of my knowledge and belief, accurate and complete.

Signature [signature] Postition Laboratory Director

Printed Name Reza Tand Date 12/10/2004

MADEP VPH FORM

Matrix	Aqueous ☑	Soil ☐	Sediment ☐	Other ☐			
Containers	Satisfactory ☑	Broken ☐	Leaking ☐				
Aqueous Preservatives	N/A ☐	pH <= 2 ☑	pH > 2 ☐				
Temperature	Received on Ice ☐	Received at 4 Deg. C ☐	Other ☑	Rec'd at 2.5 deg C			
Methanol	N/A						

Method for Ranges: MADEP VPH REV 1.1
Method for Target Analytes: MADEP VPH REV 1.1
VPH Surrogate Standards
PID: 2,5-Dibromotoluene
FID: 2,5-Dibromotoluene

Client ID: MW-37 **Lab ID:** M43544-6
Date Collected: 11/30/2004 **Date Received:** 12/1/2004

Date Extracted:	First Date Run:	Last Date Run:
N/A	12/3/2004	N/A
% Solids:	**Low Dilution:**	**High Dilution:**
N/A	1	N/A

Unadjusted Ranges	CAS #	Elution Range	Units	Result	RDL	Q
C5- C8 Aliphatics (Unadj.)		N/A	ug/l	ND [A]	50	
C9- C10 Aromatics (Unadj.)		N/A	ug/l	ND [A]	50	
C9- C12 Aliphatics (Unadj.)		N/A	ug/l	ND [A]	50	
Target Analytes						
Ethylbenzene	100-41-4	C9-C12	ug/l	ND	2	
Toluene	108-88-3	C5-C8	ug/l	ND	2	
Methyl Tert Butyl Ether	1634-04-4	C5-C8	ug/l	ND	2	
Benzene	71-43-2	C5-C8	ug/l	ND	2	
Naphthalene	91-20-3	N/A	ug/l	ND	3	
o-Xylene	95-47-6	C9-C12	ug/l	ND	2	
m,p-Xylene		C9-C12	ug/l	ND	2	
Adjusted Ranges						
C5- C8 Aliphatics		N/A	ug/l	ND [B]	50	
C9- C12 Aliphatics		N/A	ug/l	ND [C]	50	

Surrogate Recoveries			Acceptance Range
FID:2,5-Dibromotoluene	%	112	70-130 %
PID:2,5-Dibromotoluene	%	95	70-130 %

Footnotes

A Hydrocarbon Range data exclude concentrations of any surrogate(s) and/or internal standards eluting in that range

B Hydrocarbon Range data exclude concentrations of any surrogate(s) and/or internal standards eluting in that range. C5-C8 Aliphatic Hydrocarbons exclude the concentration of Target Analytes eluting in that range.

C Hydrocarbon Range data exclude concentrations of any surrogate(s) and/or internal standards eluting in that range. C9-C12 aliphatic Hydrocarbons exclude conc of Target Analytes eluting in that range AND concentration of C9-C10 Aromatic Hydrocarbons.

Z A 'J' qualifier indicates an estimated value

Were all QA/QC procedures REQUIRED by the VPH Method followed? ☑ Yes ☐ No- Details Attatched
Were all performance/acceptance standards for required QA/QC procedures achieved? ☑ Yes ☐ No- Details Attatched
Were any significant modifications made to the VPH method, as specified in Sect. 11.3? ☑ No ☐ Yes- Details Attatched

I attest under the pains and penalties of perjury that, based upon my inquiry of those individuals immediately responsible for obtaining the information, the material contained in this report is, to the best of my knowledge and belief, accurate and complete.

Signature Postition Laboratory Director

Printed Name Reza Tand Date 12/10/2004

ACCUTEST Laboratories M43544

MADEP VPH FORM

Matrix	Aqueous ☑	Soil ☐	Sediment ☐	Other ☐			
Containers	Satisfactory ☑	Broken ☐	Leaking ☐				
Aqueous Preservatives	N/A ☐	pH <= 2 ☑	pH > 2 ☐				
Temperature	Received on Ice ☐	Received at 4 Deg. C ☐	Other ☑	Rec'd at 2.5 deg C			
Methanol	N/A						

Method for Ranges: MADEP VPH REV 1.1
Method for Target Analytes: MADEP VPH REV 1.1
VPH Surrogate Standards
PID: 2,5-Dibromotoluene
FID: 2,5-Dibromotoluene

Client ID: MW-5
Date Collected: 11/30/2004
Lab ID: M43544-7
Date Received: 12/1/2004

Date Extracted:	First Date Run:	Last Date Run:
N/A	12/3/2004	N/A
% Solids:	**Low Dilution:**	**High Dilution:**
N/A	1	N/A

Unadjusted Ranges	CAS #	Elution Range	Units	Result	RDL	Q
C5- C8 Aliphatics (Unadj.)		N/A	ug/l	ND [A]	50	
C9- C10 Aromatics (Unadj.)		N/A	ug/l	ND [A]	50	
C9- C12 Aliphatics (Unadj.)		N/A	ug/l	ND [A]	50	
Target Analytes						
Ethylbenzene	100-41-4	C9-C12	ug/l	ND	2	
Toluene	108-88-3	C5-C8	ug/l	ND	2	
Methyl Tert Butyl Ether	1634-04-4	C5-C8	ug/l	ND	2	
Benzene	71-43-2	C5-C8	ug/l	ND	2	
Naphthalene	91-20-3	N/A	ug/l	ND	3	
o-Xylene	95-47-6	C9-C12	ug/l	ND	2	
m,p-Xylene		C9-C12	ug/l	ND	2	
Adjusted Ranges						
C5- C8 Aliphatics		N/A	ug/l	ND [B]	50	
C9- C12 Aliphatics		N/A	ug/l	ND [C]	50	

Surrogate Recoveries			Acceptance Range
FID:2,5-Dibromotoluene	%	116	70-130 %
PID:2,5-Dibromotoluene	%	100	70-130 %

Footnotes

A Hydrocarbon Range data exclude concentrations of any surrogate(s) and/or internal standards eluting in that range

B Hydrocarbon Range data exclude concentrations of any surrogate(s) and/or internal standards eluting in that range. C5-C8 Aliphatic Hydrocarbons exclude the concentration of Target Analytes eluting in that range.

C Hydrocarbon Range data exclude concentrations of any surrogate(s) and/or internal standards eluting in that range. C9-C12 aliphatic Hydrocarbons exclude conc of Target Analytes eluting in that range AND concentration of C9-C10 Aromatic Hydrocarbons.

Z A 'J' qualifier indicates an estimated value

Were all QA/QC procedures REQUIRED by the VPH Method followed? ☑ Yes ☐ No- Details Attatched
Were all performance/acceptance standards for required QA/QC procedures achieved? ☑ Yes ☐ No- Details Attatched
Were any significant modifications made to the VPH method, as specified in Sect. 11.3? ☑ No ☐ Yes- Details Attatched

I attest under the pains and penalties of perjury that, based upon my inquiry of those individuals immediately responsible for obtaining the information, the material contained in this report is, to the best of my knowledge and belief, accurate and complete.

Signature [signature] Postition Laboratory Director

Printed Name Reza Tand Date 12/10/2004

ACCUTEST Laboratories M43544

MADEP VPH FORM

Matrix	Aqueous ☑	Soil ☐	Sediment ☐	Other ☐			
Containers	Satisfactory ☑	Broken ☐	Leaking ☐				
Aqueous Preservatives	N/A ☐	pH <= 2 ☑	pH > 2 ☐				
Temperature	Received on Ice ☐	Received at 4 Deg. C ☐	Other ☑	Rec'd at 2.5 deg C			
Methanol	N/A						

Method for Ranges: MADEP VPH REV 1.1
Method for Target Analytes: MADEP VPH REV 1.1
VPH Surrogate Standards
PID: 2,5-Dibromotoluene
FID: 2,5-Dibromotoluene

Client ID: MW-38 **Lab ID:** M43544-8
Date Collected: 11/30/2004 **Date Received:** 12/1/2004

Date Extracted:	First Date Run:	Last Date Run:
N/A	12/3/2004	N/A
% Solids:	**Low Dilution:**	**High Dilution:**
N/A	1	N/A

Unadjusted Ranges	CAS #	Elution Range	Units	Result	RDL	Q
C5- C8 Aliphatics (Unadj.)		N/A	ug/l	ND [A]	50	
C9- C10 Aromatics (Unadj.)		N/A	ug/l	ND [A]	50	
C9- C12 Aliphatics (Unadj.)		N/A	ug/l	ND [A]	50	
Target Analytes						
Ethylbenzene	100-41-4	C9-C12	ug/l	ND	2	
Toluene	108-88-3	C5-C8	ug/l	ND	2	
Methyl Tert Butyl Ether	1634-04-4	C5-C8	ug/l	ND	2	
Benzene	71-43-2	C5-C8	ug/l	ND	2	
Naphthalene	91-20-3	N/A	ug/l	ND	3	
o-Xylene	95-47-6	C9-C12	ug/l	ND	2	
m,p-Xylene		C9-C12	ug/l	ND	2	
Adjusted Ranges						
C5- C8 Aliphatics		N/A	ug/l	ND [B]	50	
C9- C12 Aliphatics		N/A	ug/l	ND [C]	50	

Surrogate Recoveries			Acceptance Range
FID:2,5-Dibromotoluene	%	114	70-130 %
PID:2,5-Dibromotoluene	%	96	70-130 %

Footnotes

A Hydrocarbon Range data exclude concentrations of any surrogate(s) and/or internal standards eluting in that range

B Hydrocarbon Range data exclude concentrations of any surrogate(s) and/or internal standards eluting in that range. C5-C8 Aliphatic Hydrocarbons exclude the concentration of Target Analytes eluting in that range.

C Hydrocarbon Range data exclude concentrations of any surrogate(s) and/or internal standards eluting in that range. C9-C12 aliphatic Hydrocarbons exclude conc of Target Analytes eluting in that range AND concentration of C9-C10 Aromatic Hydrocarbons.

Z A 'J' qualifier indicates an estimated value

Were all QA/QC procedures REQUIRED by the VPH Method followed? ☑ Yes ☐ No- Details Attatched
Were all performance/acceptance standards for required QA/QC procedures achieved? ☑ Yes ☐ No- Details Attatched
Were any significant modifications made to the VPH method, as specified in Sect. 11.3? ☑ No ☐ Yes- Details Attatched

I attest under the pains and penalties of perjury that, based upon my inquiry of those individuals immediately responsible for obtaining the information, the material contained in this report is, to the best of my knowledge and belief, accurate and complete.

Signature Postition Laboratory Director

Printed Name Reza Tand Date 12/10/2004

ACCUTEST Laboratories M43544

3.2 3

MADEP VPH FORM

Matrix	Aqueous ☑	Soil ☐	Sediment ☐	Other ☐			
Containers	Satisfactory ☑	Broken ☐	Leaking ☐				
Aqueous Preservatives	N/A ☐	pH <= 2 ☑	pH > 2 ☐				
Temperature	Received on Ice ☐	Received at 4 Deg. C ☐	Other ☑	Rec'd at 2.5 deg C			
Methanol	N/A						

Method for Ranges: MADEP VPH REV 1.1
Method for Target Analytes: MADEP VPH REV 1.1
VPH Surrogate Standards
PID: 2,5-Dibromotoluene
FID: 2,5-Dibromotoluene

Client ID: MW-3 **Lab ID:** M43544-9
Date Collected: 11/30/2004 **Date Received:** 12/1/2004

Date Extracted:	First Date Run:	Last Date Run:
N/A	12/3/2004	N/A
% Solids:	**Low Dilution:**	**High Dilution:**
N/A	1	N/A

Unadjusted Ranges	CAS #	Elution Range	Units	Result	RDL	Q
C5- C8 Aliphatics (Unadj.)		N/A	ug/l	ND A	50	
C9- C10 Aromatics (Unadj.)		N/A	ug/l	ND A	50	
C9- C12 Aliphatics (Unadj.)		N/A	ug/l	ND A	50	
Target Analytes						
Ethylbenzene	100-41-4	C9-C12	ug/l	ND	2	
Toluene	108-88-3	C5-C8	ug/l	ND	2	
Methyl Tert Butyl Ether	1634-04-4	C5-C8	ug/l	ND	2	
Benzene	71-43-2	C5-C8	ug/l	ND	2	
Naphthalene	91-20-3	N/A	ug/l	ND	3	
o-Xylene	95-47-6	C9-C12	ug/l	ND	2	
m,p-Xylene		C9-C12	ug/l	ND	2	
Adjusted Ranges						
C5- C8 Aliphatics		N/A	ug/l	ND B	50	
C9- C12 Aliphatics		N/A	ug/l	ND C	50	

Surrogate Recoveries			Acceptance Range
FID:2,5-Dibromotoluene	%	120	70-130 %
PID:2,5-Dibromotoluene	%	102	70-130 %

Footnotes

A Hydrocarbon Range data exclude concentrations of any surrogate(s) and/or internal standards eluting in that range

B Hydrocarbon Range data exclude concentrations of any surrogate(s) and/or internal standards eluting in that range. C5-C8 Aliphatic Hydrocarbons exclude the concentration of Target Analytes eluting in that range.

C Hydrocarbon Range data exclude concentrations of any surrogate(s) and/or internal standards eluting in that range. C9-C12 aliphatic Hydrocarbons exclude conc of Target Analytes eluting in that range AND concentration of C9-C10 Aromatic Hydrocarbons.

Z A 'J' qualifier indicates an estimated value

Were all QA/QC procedures REQUIRED by the VPH Method followed? ☑ Yes ☐ No- Details Attatched
Were all performance/acceptance standards for required QA/QC procedures achieved? ☑ Yes ☐ No- Details Attatched
Were any significant modifications made to the VPH method, as specified in Sect. 11.3? ☑ No ☐ Yes- Details Attatched

I attest under the pains and penalties of perjury that, based upon my inquiry of those individuals immediately responsible for obtaining the information, the material contained in this report is, to the best of my knowledge and belief, accurate and complete.

Signature Postition Laboratory Director

Printed Name Reza Tand Date 12/10/2004

Internal Sample Tracking Chronicle

Exxon Service Station

Job No: M43544

CDM:S/S 3-5805 1425 Massachusetts Ave., Boxborough, MA
Project No: PO#4506003635 WBS#08

Sample Number	Method	Analyzed	By	Prepped	By	Test Codes
M43544-1 Collected: 30-NOV-04 08:50 By: TAN Received: 01-DEC-04 By: RS MW-33						
M43544-1	MADEP VPH REV 1.1	03-DEC-04 15:17	AP			VMAVPH
M43544-2 Collected: 30-NOV-04 09:20 By: TAN Received: 01-DEC-04 By: RS MW-9						
M43544-2	MADEP VPH REV 1.1	03-DEC-04 16:00	AP			VMAVPH
M43544-3 Collected: 30-NOV-04 09:45 By: TAN Received: 01-DEC-04 By: RS MW-35						
M43544-3	MADEP VPH REV 1.1	03-DEC-04 16:43	AP			VMAVPH
M43544-4 Collected: 30-NOV-04 10:15 By: TAN Received: 01-DEC-04 By: RS MW-36						
M43544-4	MADEP VPH REV 1.1	03-DEC-04 17:26	AP			VMAVPH
M43544-5 Collected: 30-NOV-04 10:40 By: TAN Received: 01-DEC-04 By: RS MW-34						
M43544-5	MADEP VPH REV 1.1	03-DEC-04 18:09	AP			VMAVPH
M43544-6 Collected: 30-NOV-04 12:15 By: TAN Received: 01-DEC-04 By: RS MW-37						
M43544-6	MADEP VPH REV 1.1	03-DEC-04 18:52	AP			VMAVPH
M43544-7 Collected: 30-NOV-04 13:20 By: RMB Received: 01-DEC-04 By: RS MW-5						
M43544-7	MADEP VPH REV 1.1	03-DEC-04 19:35	AP			VMAVPH
M43544-8 Collected: 30-NOV-04 13:45 By: RMB Received: 01-DEC-04 By: RS MW-38						
M43544-8	MADEP VPH REV 1.1	03-DEC-04 20:18	AP			VMAVPH

Internal Sample Tracking Chronicle

Exxon Service Station

Job No: M43544

CDM:S/S 3-5805 1425 Massachusetts Ave., Boxborough, MA
Project No: PO#4506003635 WBS#08

Sample Number	Method	Analyzed	By	Prepped	By	Test Codes
M43544-9 Collected: 30-NOV-04 14:20 By: RMB Received: 01-DEC-04 By: RS MW-3						
M43544-9	MADEP VPH REV 1.1	03-DEC-04 21:00	AP			VMAVPH
M43544-10 Collected: 30-NOV-04 00:00 By: RMB Received: 01-DEC-04 By: RS DUP-1						
M43544-10	MADEP VPH REV 1.1	03-DEC-04 21:43	AP			VMAVPH
M43544-11 Collected: 30-NOV-04 15:00 By: RMB Received: 01-DEC-04 By: RS MW-19						
M43544-11	MADEP VPH REV 1.1	03-DEC-04 22:26	AP			VMAVPH
M43544-12 Collected: 30-NOV-04 15:20 By: RMB Received: 01-DEC-04 By: RS MW-15						
M43544-12	MADEP VPH REV 1.1	03-DEC-04 23:08	AP			VMAVPH
M43544-13 Collected: 30-NOV-04 15:30 By: RMB Received: 01-DEC-04 By: RS MW-16						
M43544-13	MADEP VPH REV 1.1	03-DEC-04 23:51	AP			VMAVPH
M43544-14 Collected: 30-NOV-04 15:40 By: RMB Received: 01-DEC-04 By: RS MW-28						
M43544-14	MADEP VPH REV 1.1	04-DEC-04 00:34	AP			VMAVPH
M43544-15 Collected: 30-NOV-04 15:45 By: RMB Received: 01-DEC-04 By: RS MW-29						
M43544-15	MADEP VPH REV 1.1	04-DEC-04 01:16	AP			VMAVPH
M43544-16 Collected: 30-NOV-04 16:00 By: RMB Received: 01-DEC-04 By: RS MW-27						
M43544-16	MADEP VPH REV 1.1	04-DEC-04 01:59	AP			VMAVPH

Internal Sample Tracking Chronicle

Exxon Service Station

Job No: M43544

CDM:S/S 3-5805 1425 Massachusetts Ave., Boxborough, MA
Project No: PO#4506003635 WBS#08

Sample Number	Method	Analyzed	By	Prepped	By	Test Codes
M43544-17 Collected: 30-NOV-04 16:20 By: RMB Received: 01-DEC-04 By: RS POET INF						
M43544-17	EPA 524.2 REV 4.1	06-DEC-04 23:06	AT			V524STD+
M43544-18 Collected: 30-NOV-04 16:30 By: RMB Received: 01-DEC-04 By: RS POET MID						
M43544-18	EPA 524.2 REV 4.1	06-DEC-04 18:52	AT			V524STD+
M43544-19 Collected: 30-NOV-04 16:40 By: RMB Received: 01-DEC-04 By: RS POET EFF						
M43544-19	EPA 524.2 REV 4.1	06-DEC-04 18:10	AT			V524STD+
M43544-21 Collected: 30-NOV-04 00:00 By: RMB Received: 01-DEC-04 By: RS TRIP BLANK						
M43544-21	EPA 524.2 REV 4.1	06-DEC-04 16:45	AT			V524STD+
M43544-22 Collected: 30-NOV-04 16:50 By: RMB Received: 01-DEC-04 By: RS GW INF						
M43544-22	EPA 160.2	01-DEC-04	BF			TSS
M43544-22	EPA 110.2	01-DEC-04 15:00	MA			COL
M43544-22	EPA 180.1	01-DEC-04 15:30	MA			TURB
M43544-22	EPA 418.1	06-DEC-04	BF	06-DEC-04	BF	PHC
M43544-22	SW846 6010B	07-DEC-04 13:51	LMN	06-DEC-04	OP	PB
M43544-23 Collected: 30-NOV-04 16:55 By: RMB Received: 01-DEC-04 By: RS GW EFF						
M43544-23	EPA 160.2	01-DEC-04	BF			TSS
M43544-23	EPA 110.2	01-DEC-04 15:00	MA			COL
M43544-23	EPA 180.1	01-DEC-04 15:30	MA			TURB
M43544-23	EPA 418.1	06-DEC-04	BF	06-DEC-04	BF	PHC
M43544-23	SW846 6010B	07-DEC-04 13:25	LMN	06-DEC-04	OP	PB

Internal Sample Tracking Chronicle

Exxon Service Station

Job No: M43544

CDM:S/S 3-5805 1425 Massachusetts Ave., Boxborough, MA
Project No: PO#4506003635 WBS#08

Sample Number	Method	Analyzed	By	Prepped	By	Test Codes
M43544-24 Collected: 30-NOV-04 11:20 By: RMB Received: 01-DEC-04 By: RS MW-6						
M43544-24	MADEP VPH REV 1.1	04-DEC-04 21:50	AF			VMAVPH
M43544-25 Collected: 30-NOV-04 11:55 By: RMB Received: 01-DEC-04 By: RS MW-7						
M43544-25	MADEP VPH REV 1.1	04-DEC-04 22:32	AF			VMAVPH

GC/MS Volatiles

QC Data Summaries

Includes the following where applicable:

- Method Blank Summaries
- Blank Spike Summaries
- Matrix Spike and Duplicate Summaries
- Surrogate Recovery Summaries

Method Blank Summary

Job Number: M43544
Account: EXXONSS Exxon Service Station
Project: CDM:S/S 3-5805 1425 Massachusetts Ave., Boxborough, MA

Sample	File ID	DF	Analyzed	By	Prep Date	Prep Batch	Analytical Batch
MSD2404-MB	D40788.D	1	12/06/04	AT	n/a	n/a	MSD2404

The QC reported here applies to the following samples: Method: EPA 524.2 REV 4.1

M43544-17, M43544-18, M43544-19, M43544-21

CAS No.	Compound	Result	RL	Units	Q
71-43-2	Benzene	ND	0.50	ug/l	
108-86-1	Bromobenzene	ND	0.50	ug/l	
74-97-5	Bromochloromethane	ND	0.50	ug/l	
75-27-4	Bromodichloromethane	ND	0.50	ug/l	
75-25-2	Bromoform	ND	0.50	ug/l	
74-83-9	Bromomethane	ND	0.50	ug/l	
104-51-8	n-Butylbenzene	ND	0.50	ug/l	
135-98-8	sec-Butylbenzene	ND	0.50	ug/l	
98-06-6	tert-Butylbenzene	ND	0.50	ug/l	
108-90-7	Chlorobenzene	ND	0.50	ug/l	
75-00-3	Chloroethane	ND	0.50	ug/l	
67-66-3	Chloroform	ND	0.50	ug/l	
74-87-3	Chloromethane	ND	0.50	ug/l	
95-49-8	o-Chlorotoluene	ND	0.50	ug/l	
106-43-4	p-Chlorotoluene	ND	0.50	ug/l	
56-23-5	Carbon tetrachloride	ND	0.50	ug/l	
75-34-3	1,1-Dichloroethane	ND	0.50	ug/l	
75-35-4	1,1-Dichloroethylene	ND	0.50	ug/l	
563-58-6	1,1-Dichloropropene	ND	0.50	ug/l	
96-12-8	1,2-Dibromo-3-chloropropane	ND	0.50	ug/l	
106-93-4	1,2-Dibromoethane	ND	0.50	ug/l	
107-06-2	1,2-Dichloroethane	ND	0.50	ug/l	
78-87-5	1,2-Dichloropropane	ND	0.50	ug/l	
142-28-9	1,3-Dichloropropane	ND	0.50	ug/l	
594-20-7	2,2-Dichloropropane	ND	0.50	ug/l	
124-48-1	Dibromochloromethane	ND	0.50	ug/l	
74-95-3	Dibromomethane	ND	0.50	ug/l	
75-71-8	Dichlorodifluoromethane	ND	0.50	ug/l	
10061-01-5	cis-1,3-Dichloropropene	ND	0.50	ug/l	
541-73-1	m-Dichlorobenzene	ND	0.50	ug/l	
95-50-1	o-Dichlorobenzene	ND	0.50	ug/l	
106-46-7	p-Dichlorobenzene	ND	0.50	ug/l	
156-60-5	trans-1,2-Dichloroethylene	ND	0.50	ug/l	
156-59-2	cis-1,2-Dichloroethylene	ND	0.50	ug/l	
10061-02-6	trans-1,3-Dichloropropene	ND	0.50	ug/l	
100-41-4	Ethylbenzene	ND	0.50	ug/l	

Method Blank Summary

Job Number: M43544
Account: EXXONSS Exxon Service Station
Project: CDM:S/S 3-5805 1425 Massachusetts Ave., Boxborough, MA

Sample	File ID	DF	Analyzed	By	Prep Date	Prep Batch	Analytical Batch
MSD2404-MB	D40788.D	1	12/06/04	AT	n/a	n/a	MSD2404

The QC reported here applies to the following samples: Method: EPA 524.2 REV 4.1

M43544-17, M43544-18, M43544-19, M43544-21

CAS No.	Compound	Result	RL	Units	Q
87-68-3	Hexachlorobutadiene	ND	0.50	ug/l	
98-82-8	Isopropylbenzene	ND	0.50	ug/l	
99-87-6	p-Isopropyltoluene	ND	0.50	ug/l	
75-09-2	Methylene chloride	ND	0.50	ug/l	
1634-04-4	Methyl Tert Butyl Ether	ND	0.50	ug/l	
91-20-3	Naphthalene	ND	0.50	ug/l	
103-65-1	n-Propylbenzene	ND	0.50	ug/l	
100-42-5	Styrene	ND	0.50	ug/l	
630-20-6	1,1,1,2-Tetrachloroethane	ND	0.50	ug/l	
71-55-6	1,1,1-Trichloroethane	ND	0.50	ug/l	
79-34-5	1,1,2,2-Tetrachloroethane	ND	0.50	ug/l	
79-00-5	1,1,2-Trichloroethane	ND	0.50	ug/l	
87-61-6	1,2,3-Trichlorobenzene	ND	0.50	ug/l	
96-18-4	1,2,3-Trichloropropane	ND	0.50	ug/l	
120-82-1	1,2,4-Trichlorobenzene	ND	0.50	ug/l	
95-63-6	1,2,4-Trimethylbenzene	ND	0.50	ug/l	
108-67-8	1,3,5-Trimethylbenzene	ND	0.50	ug/l	
127-18-4	Tetrachloroethylene	ND	0.50	ug/l	
108-88-3	Toluene	ND	0.50	ug/l	
79-01-6	Trichloroethylene	ND	0.50	ug/l	
75-69-4	Trichlorofluoromethane	ND	0.50	ug/l	
75-01-4	Vinyl chloride	ND	0.50	ug/l	
	m,p-Xylene	ND	0.50	ug/l	
95-47-6	o-Xylene	ND	0.50	ug/l	
1330-20-7	Xylenes (total)	ND	0.50	ug/l	

CAS No.	Surrogate Recoveries		Limits
2199-69-1	1,2-Dichlorobenzene-d4	84%	70-130%
460-00-4	4-Bromofluorobenzene	88%	70-130%

CAS No.	Tentatively Identified Compounds	R.T.	Est. Conc.	Units	Q
	Total TIC, Volatile		0	ug/l	

Blank Spike Summary

Job Number: M43544
Account: EXXONSS Exxon Service Station
Project: CDM:S/S 3-5805 1425 Massachusetts Ave., Boxborough, MA

Sample	File ID	DF	Analyzed	By	Prep Date	Prep Batch	Analytical Batch
MSD2404-BS	D40785.D	1	12/06/04	AT	n/a	n/a	MSD2404

The QC reported here applies to the following samples: Method: EPA 524.2 REV 4.1

M43544-17, M43544-18, M43544-19, M43544-21

CAS No.	Compound	Spike ug/l	BSP ug/l	BSP %	Limits
71-43-2	Benzene	5	4.9	98	70-130
108-86-1	Bromobenzene	5	4.9	98	70-130
74-97-5	Bromochloromethane	5	4.8	96	70-130
75-27-4	Bromodichloromethane	5	5.0	100	70-130
75-25-2	Bromoform	5	4.7	94	70-130
74-83-9	Bromomethane	5	4.7	94	70-130
104-51-8	n-Butylbenzene	5	5.1	102	70-130
135-98-8	sec-Butylbenzene	5	5.0	100	70-130
98-06-6	tert-Butylbenzene	5	5.2	104	70-130
108-90-7	Chlorobenzene	5	4.7	94	70-130
75-00-3	Chloroethane	5	4.9	98	70-130
67-66-3	Chloroform	5	5.2	104	70-130
74-87-3	Chloromethane	5	5.7	114	70-130
95-49-8	o-Chlorotoluene	5	4.8	96	70-130
106-43-4	p-Chlorotoluene	5	4.8	96	70-130
56-23-5	Carbon tetrachloride	5	5.7	114	70-130
75-34-3	1,1-Dichloroethane	5	5.1	102	70-130
75-35-4	1,1-Dichloroethylene	5	5.9	118	70-130
563-58-6	1,1-Dichloropropene	5	5.8	116	70-130
96-12-8	1,2-Dibromo-3-chloropropane	5	3.8	76	70-130
106-93-4	1,2-Dibromoethane	5	5.0	100	70-130
107-06-2	1,2-Dichloroethane	5	5.2	104	70-130
78-87-5	1,2-Dichloropropane	5	5.1	102	70-130
142-28-9	1,3-Dichloropropane	5	4.4	88	70-130
594-20-7	2,2-Dichloropropane	5	5.6	112	70-130
124-48-1	Dibromochloromethane	5	4.9	98	70-130
74-95-3	Dibromomethane	5	4.7	94	70-130
75-71-8	Dichlorodifluoromethane	5	4.8	96	70-130
10061-01-5	cis-1,3-Dichloropropene	5	4.5	90	70-130
541-73-1	m-Dichlorobenzene	5	4.6	92	70-130
95-50-1	o-Dichlorobenzene	5	4.3	86	70-130
106-46-7	p-Dichlorobenzene	5	4.5	90	70-130
156-60-5	trans-1,2-Dichloroethylene	5	5.9	118	70-130
156-59-2	cis-1,2-Dichloroethylene	5	4.9	98	70-130
10061-02-6	trans-1,3-Dichloropropene	5	4.9	98	70-130
100-41-4	Ethylbenzene	5	4.9	98	70-130

Blank Spike Summary

Job Number: M43544
Account: EXXONSS Exxon Service Station
Project: CDM:S/S 3-5805 1425 Massachusetts Ave., Boxborough, MA

Sample	File ID	DF	Analyzed	By	Prep Date	Prep Batch	Analytical Batch
MSD2404-BS	D40785.D	1	12/06/04	AT	n/a	n/a	MSD2404

The QC reported here applies to the following samples: Method: EPA 524.2 REV 4.1

M43544-17, M43544-18, M43544-19, M43544-21

CAS No.	Compound	Spike ug/l	BSP ug/l	BSP %	Limits
87-68-3	Hexachlorobutadiene	5	5.0	100	70-130
98-82-8	Isopropylbenzene	5	5.1	102	70-130
99-87-6	p-Isopropyltoluene	5	5.0	100	70-130
75-09-2	Methylene chloride	5	5.0	100	70-130
1634-04-4	Methyl Tert Butyl Ether	5	5.0	100	70-130
91-20-3	Naphthalene	5	4.1	82	70-130
103-65-1	n-Propylbenzene	5	4.9	98	70-130
100-42-5	Styrene	5	4.7	94	70-130
630-20-6	1,1,1,2-Tetrachloroethane	5	5.0	100	70-130
71-55-6	1,1,1-Trichloroethane	5	5.7	114	70-130
79-34-5	1,1,2,2-Tetrachloroethane	5	4.4	88	70-130
79-00-5	1,1,2-Trichloroethane	5	4.6	92	70-130
87-61-6	1,2,3-Trichlorobenzene	5	4.8	96	70-130
96-18-4	1,2,3-Trichloropropane	5	5.1	102	70-130
120-82-1	1,2,4-Trichlorobenzene	5	4.6	92	70-130
95-63-6	1,2,4-Trimethylbenzene	5	4.8	96	70-130
108-67-8	1,3,5-Trimethylbenzene	5	4.9	98	70-130
127-18-4	Tetrachloroethylene	5	5.1	102	70-130
108-88-3	Toluene	5	4.9	98	70-130
79-01-6	Trichloroethylene	5	5.2	104	70-130
75-69-4	Trichlorofluoromethane	5	5.8	116	70-130
75-01-4	Vinyl chloride	5	5.2	104	70-130
	m,p-Xylene	10	9.1	91	70-130
95-47-6	o-Xylene	5	4.7	94	70-130
1330-20-7	Xylenes (total)	15	13.8	92	70-130

CAS No.	Surrogate Recoveries	BSP	Limits
2199-69-1	1,2-Dichlorobenzene-d4	100%	70-130%
460-00-4	4-Bromofluorobenzene	102%	70-130%

Duplicate Summary

Job Number: M43544
Account: EXXONSS Exxon Service Station
Project: CDM:S/S 3-5805 1425 Massachusetts Ave., Boxborough, MA

Sample	File ID	DF	Analyzed	By	Prep Date	Prep Batch	Analytical Batch
M43591-1DUP	D40799.D	1	12/06/04	AT	n/a	n/a	MSD2404
M43591-1	D40793.D	1	12/06/04	AT	n/a	n/a	MSD2404

The QC reported here applies to the following samples: Method: EPA 524.2 REV 4.1

M43544-17, M43544-18, M43544-19, M43544-21

CAS No.	Compound	M43591-1 ug/l	Q	DUP ug/l	Q	RPD	Limits
71-43-2	Benzene	ND		ND		nc	30
108-86-1	Bromobenzene	ND		ND		nc	30
74-97-5	Bromochloromethane	ND		ND		nc	30
75-27-4	Bromodichloromethane	ND		ND		nc	30
75-25-2	Bromoform	ND		ND		nc	30
74-83-9	Bromomethane	ND		ND		nc	30
104-51-8	n-Butylbenzene	ND		ND		nc	30
135-98-8	sec-Butylbenzene	ND		ND		nc	30
98-06-6	tert-Butylbenzene	ND		ND		nc	30
108-90-7	Chlorobenzene	ND		ND		nc	30
75-00-3	Chloroethane	ND		ND		nc	30
67-66-3	Chloroform	ND		ND		nc	30
74-87-3	Chloromethane	ND		ND		nc	30
95-49-8	o-Chlorotoluene	ND		ND		nc	30
106-43-4	p-Chlorotoluene	ND		ND		nc	30
56-23-5	Carbon tetrachloride	ND		ND		nc	30
75-34-3	1,1-Dichloroethane	ND		ND		nc	30
75-35-4	1,1-Dichloroethylene	ND		ND		nc	30
563-58-6	1,1-Dichloropropene	ND		ND		nc	30
96-12-8	1,2-Dibromo-3-chloropropane	ND		ND		nc	30
106-93-4	1,2-Dibromoethane	ND		ND		nc	30
107-06-2	1,2-Dichloroethane	ND		ND		nc	30
78-87-5	1,2-Dichloropropane	ND		ND		nc	30
142-28-9	1,3-Dichloropropane	ND		ND		nc	30
594-20-7	2,2-Dichloropropane	ND		ND		nc	30
124-48-1	Dibromochloromethane	ND		ND		nc	30
74-95-3	Dibromomethane	ND		ND		nc	30
75-71-8	Dichlorodifluoromethane	ND		ND		nc	30
10061-01-5	cis-1,3-Dichloropropene	ND		ND		nc	30
541-73-1	m-Dichlorobenzene	ND		ND		nc	30
95-50-1	o-Dichlorobenzene	ND		ND		nc	30
106-46-7	p-Dichlorobenzene	ND		ND		nc	30
156-60-5	trans-1,2-Dichloroethylene	ND		ND		nc	30
156-59-2	cis-1,2-Dichloroethylene	ND		ND		nc	30
10061-02-6	trans-1,3-Dichloropropene	ND		ND		nc	30
100-41-4	Ethylbenzene	ND		ND		nc	30

Duplicate Summary

Job Number: M43544
Account: EXXONSS Exxon Service Station
Project: CDM:S/S 3-5805 1425 Massachusetts Ave., Boxborough, MA

Sample	File ID	DF	Analyzed	By	Prep Date	Prep Batch	Analytical Batch
M43591-1DUP	D40799.D	1	12/06/04	AT	n/a	n/a	MSD2404
M43591-1	D40793.D	1	12/06/04	AT	n/a	n/a	MSD2404

The QC reported here applies to the following samples: Method: EPA 524.2 REV 4.1

M43544-17, M43544-18, M43544-19, M43544-21

CAS No.	Compound	M43591-1 ug/l	Q	DUP ug/l	Q	RPD	Limits
87-68-3	Hexachlorobutadiene	ND		ND		nc	30
98-82-8	Isopropylbenzene	ND		ND		nc	30
99-87-6	p-Isopropyltoluene	ND		ND		nc	30
75-09-2	Methylene chloride	ND		ND		nc	30
1634-04-4	Methyl Tert Butyl Ether	ND		ND		nc	30
91-20-3	Naphthalene	ND		ND		nc	30
103-65-1	n-Propylbenzene	ND		ND		nc	30
100-42-5	Styrene	ND		ND		nc	30
630-20-6	1,1,1,2-Tetrachloroethane	ND		ND		nc	30
71-55-6	1,1,1-Trichloroethane	ND		ND		nc	30
79-34-5	1,1,2,2-Tetrachloroethane	ND		ND		nc	30
79-00-5	1,1,2-Trichloroethane	ND		ND		nc	30
87-61-6	1,2,3-Trichlorobenzene	ND		ND		nc	30
96-18-4	1,2,3-Trichloropropane	ND		ND		nc	30
120-82-1	1,2,4-Trichlorobenzene	ND		ND		nc	30
95-63-6	1,2,4-Trimethylbenzene	ND		ND		nc	30
108-67-8	1,3,5-Trimethylbenzene	ND		ND		nc	30
127-18-4	Tetrachloroethylene	ND		ND		nc	30
108-88-3	Toluene	ND		ND		nc	30
79-01-6	Trichloroethylene	ND		ND		nc	30
75-69-4	Trichlorofluoromethane	ND		ND		nc	30
75-01-4	Vinyl chloride	ND		ND		nc	30
	m,p-Xylene	ND		ND		nc	30
95-47-6	o-Xylene	ND		ND		nc	30
1330-20-7	Xylenes (total)	ND		ND		nc	30

CAS No.	Surrogate Recoveries	DUP	M43591-1	Limits
2199-69-1	1,2-Dichlorobenzene-d4	88%	78%	70-130%
460-00-4	4-Bromofluorobenzene	76%	91%	70-130%

Volatile Surrogate Recovery Summary

Job Number: M43544
Account: EXXONSS Exxon Service Station
Project: CDM:S/S 3-5805 1425 Massachusetts Ave., Boxborough, MA

Method: EPA 524.2 REV 4.1 Matrix: AQ

Samples and QC shown here apply to the above method

Lab Sample ID	Lab File ID	S1	S2
M43544-17	D40798.D	76.0	100.0
M43544-18	D40792.D	86.0	94.0
M43544-19	D40791.D	93.0	93.0
M43544-21	D40789.D	85.0	97.0
M43591-1DUP	D40799.D	88.0	76.0
MSD2404-BS	D40785.D	100.0	102.0
MSD2404-MB	D40788.D	84.0	88.0

Surrogate Compounds	Recovery Limits
S1 = 1,2-Dichlorobenzene-d4	70-130%
S2 = 4-Bromofluorobenzene	70-130%

GC Volatiles

5

QC Data Summaries

Includes the following where applicable:

- Method Blank Summaries
- Blank Spike Summaries
- Matrix Spike and Duplicate Summaries
- Surrogate Recovery Summaries

Method Blank Summary

Job Number: M43544
Account: EXXONSS Exxon Service Station
Project: CDM:S/S 3-5805 1425 Massachusetts Ave., Boxborough, MA

Sample	File ID	DF	Analyzed	By	Prep Date	Prep Batch	Analytical Batch
GMN1358-MB	MN31155.D	1	12/03/04	AP	n/a	n/a	GMN1358

The QC reported here applies to the following samples: Method: MADEP VPH REV 1.1

M43544-1, M43544-2, M43544-3, M43544-4, M43544-5, M43544-6, M43544-7, M43544-8, M43544-9, M43544-10, M43544-11, M43544-12, M43544-13, M43544-14, M43544-15, M43544-16

CAS No.	Compound	Result	RL	Units	Q
71-43-2	Benzene	ND	2.0	ug/l	
100-41-4	Ethylbenzene	ND	2.0	ug/l	
1634-04-4	Methyl Tert Butyl Ether	ND	2.0	ug/l	
91-20-3	Naphthalene	ND	3.0	ug/l	
108-88-3	Toluene	ND	2.0	ug/l	
	m,p-Xylene	ND	2.0	ug/l	
95-47-6	o-Xylene	ND	2.0	ug/l	
	C5- C8 Aliphatics (Unadj.)	ND	50	ug/l	
	C9- C12 Aliphatics (Unadj.)	ND	50	ug/l	
	C9- C10 Aromatics (Unadj.)	ND	50	ug/l	
	C5- C8 Aliphatics	ND	50	ug/l	
	C9- C12 Aliphatics	ND	50	ug/l	

CAS No.	Surrogate Recoveries		Limits
615-59-8	2,5-Dibromotoluene	99%	70-130%
615-59-8	2,5-Dibromotoluene	88%	70-130%

Method Blank Summary

Job Number: M43544
Account: EXXONSS Exxon Service Station
Project: CDM:S/S 3-5805 1425 Massachusetts Ave., Boxborough, MA

Sample	File ID	DF	Analyzed	By	Prep Date	Prep Batch	Analytical Batch
GWX1195-MB	WX25813.D	1	12/04/04	AF	n/a	n/a	GWX1195

The QC reported here applies to the following samples: Method: MADEP VPH REV 1.1

M43544-24, M43544-25

CAS No.	Compound	Result	RL	Units	Q
71-43-2	Benzene	ND	2.0	ug/l	
100-41-4	Ethylbenzene	ND	2.0	ug/l	
1634-04-4	Methyl Tert Butyl Ether	ND	2.0	ug/l	
91-20-3	Naphthalene	ND	3.0	ug/l	
108-88-3	Toluene	ND	2.0	ug/l	
	m,p-Xylene	ND	2.0	ug/l	
95-47-6	o-Xylene	ND	2.0	ug/l	
	C5- C8 Aliphatics (Unadj.)	ND	50	ug/l	
	C9- C12 Aliphatics (Unadj.)	ND	50	ug/l	
	C9- C10 Aromatics (Unadj.)	ND	50	ug/l	
	C5- C8 Aliphatics	ND	50	ug/l	
	C9- C12 Aliphatics	ND	50	ug/l	

CAS No.	Surrogate Recoveries		Limits
615-59-8	2,5-Dibromotoluene	81%	70-130%
615-59-8	2,5-Dibromotoluene	80%	70-130%

Blank Spike/Blank Spike Duplicate Summary

Job Number: M43544
Account: EXXONSS Exxon Service Station
Project: CDM:S/S 3-5805 1425 Massachusetts Ave., Boxborough, MA

Sample	File ID	DF	Analyzed	By	Prep Date	Prep Batch	Analytical Batch
GMN1358-BSP	MN31156.D	1	12/03/04	AP	n/a	n/a	GMN1358
GMN1358-BSD	MN31157.D	1	12/03/04	AP	n/a	n/a	GMN1358

The QC reported here applies to the following samples: Method: MADEP VPH REV 1.1

M43544-1, M43544-2, M43544-3, M43544-4, M43544-5, M43544-6, M43544-7, M43544-8, M43544-9, M43544-10, M43544-11, M43544-12, M43544-13, M43544-14, M43544-15, M43544-16

CAS No.	Compound	Spike ug/l	BSP ug/l	BSP %	BSD ug/l	BSD %	RPD	Limits Rec/RPD
71-43-2	Benzene	20	17.7	89	17.8	89	1	70-130/25
100-41-4	Ethylbenzene	20	20.2	101	20.1	101	0	70-130/25
1634-04-4	Methyl Tert Butyl Ether	60	56.0	93	55.9	93	0	70-130/25
91-20-3	Naphthalene	40	42.2	106	43.0	108	2	70-130/25
108-88-3	Toluene	60	59.4	99	59.9	100	1	70-130/25
	m,p-Xylene	80	84.8	106	85.6	107	1	70-130/25
95-47-6	o-Xylene	40	39.6	99	40.0	100	1	70-130/25
	C5- C8 Aliphatics (Unadj.)		290		292		1	70-130/25
	C9- C12 Aliphatics (Unadj.)		384		380		1	70-130/25
	C9- C10 Aromatics (Unadj.)		96.7		97.4		1	70-130/25

CAS No.	Surrogate Recoveries	BSP	BSD	Limits
615-59-8	2,5-Dibromotoluene	119%	121%	70-130%
615-59-8	2,5-Dibromotoluene	105%	111%	70-130%

Blank Spike/Blank Spike Duplicate Summary

Job Number: M43544
Account: EXXONSS Exxon Service Station
Project: CDM:S/S 3-5805 1425 Massachusetts Ave., Boxborough, MA

Sample	File ID	DF	Analyzed	By	Prep Date	Prep Batch	Analytical Batch
GWX1195-BSP	WX25814.D	1	12/04/04	AF	n/a	n/a	GWX1195
GWX1195-BSD	WX25815.D	1	12/04/04	AF	n/a	n/a	GWX1195

The QC reported here applies to the following samples: Method: MADEP VPH REV 1.1

M43544-24, M43544-25

CAS No.	Compound	Spike ug/l	BSP ug/l	BSP %	BSD ug/l	BSD %	RPD	Limits Rec/RPD
71-43-2	Benzene	20	18.8	94	19.1	96	2	70-130/25
100-41-4	Ethylbenzene	20	19.5	98	19.5	98	0	70-130/25
1634-04-4	Methyl Tert Butyl Ether	60	56.9	95	57.9	97	2	70-130/25
91-20-3	Naphthalene	40	33.4	84	33.7	84	1	70-130/25
108-88-3	Toluene	60	58.5	98	58.8	98	1	70-130/25
	m,p-Xylene	80	75.8	95	75.1	94	1	70-130/25
95-47-6	o-Xylene	40	37.0	93	36.5	91	1	70-130/25
	C5- C8 Aliphatics (Unadj.)		311		312		0	70-130/25
	C9- C12 Aliphatics (Unadj.)		292		290		1	70-130/25
	C9- C10 Aromatics (Unadj.)		100		99.8		0	70-130/25

CAS No.	Surrogate Recoveries	BSP	BSD	Limits
615-59-8	2,5-Dibromotoluene	87%	86%	70-130%
615-59-8	2,5-Dibromotoluene	87%	88%	70-130%

Volatile Surrogate Recovery Summary

Job Number: M43544
Account: EXXONSS Exxon Service Station
Project: CDM:S/S 3-5805 1425 Massachusetts Ave., Boxborough, MA

Method: MADEP VPH REV 1.1 Matrix: AQ

Samples and QC shown here apply to the above method

Lab Sample ID	Lab File ID	S1 [a]	S1 [b]
M43544-1	MN31162.D	114.0	99.0
M43544-2	MN31163.D	112.0	96.0
M43544-3	MN31164.D	119.0	102.0
M43544-4	MN31165.D	120.0	102.0
M43544-5	MN31166.D	111.0	94.0
M43544-6	MN31167.D	112.0	95.0
M43544-7	MN31168.D	116.0	100.0
M43544-8	MN31169.D	114.0	96.0
M43544-9	MN31170.D	120.0	102.0
M43544-10	MN31171.D	109.0	92.0
M43544-11	MN31172.D	110.0	94.0
M43544-12	MN31173.D	110.0	95.0
M43544-13	MN31174.D	115.0	98.0
M43544-14	MN31175.D	111.0	99.0
M43544-15	MN31176.D	126.0	103.0
M43544-16	MN31177.D	120.0	101.0
M43544-24	WX25830.D	85.0	84.0
M43544-25	WX25831.D	83.0	83.0
GMN1358-BSD	MN31157.D	121.0	111.0
GMN1358-BSP	MN31156.D	119.0	105.0
GMN1358-MB	MN31155.D	99.0	88.0
GWX1195-BSD	WX25815.D	86.0	88.0
GWX1195-BSP	WX25814.D	87.0	87.0
GWX1195-MB	WX25813.D	81.0	80.0

Surrogate Compounds	Recovery Limits
S1 = 2,5-Dibromotoluene	70-130%

(a) Recovery from GC signal #1
(b) Recovery from GC signal #2

QC Data Summaries

Includes the following where applicable:

- Method Blank Summaries
- Matrix Spike and Duplicate Summaries
- Blank Spike and Lab Control Sample Summaries
- Serial Dilution Summaries

BLANK RESULTS SUMMARY
Part 2 - Method Blanks

Login Number: M43544
Account: EXXONSS - Exxon Service Station
Project: CDM:S/S 3-5805 1425 Massachusetts Ave., Boxborough, MA

QC Batch ID: MP6398
Matrix Type: AQUEOUS

Methods: SW846 6010B
Units: ug/l

Prep Date: 12/06/04

Metal	RL	IDL	MB raw	final
Aluminum	200	8.1		
Antimony	6.0	1.7		
Arsenic	5.0	2.2		
Barium	200	.64		
Beryllium	4.0	.12		
Boron	100	.88		
Cadmium	4.0	.3		
Calcium	5000	2.3		
Chromium	10	.26		
Cobalt	50	.81		
Copper	25	.47		
Iron	100	9.7		
Lead	5.0	1.5	-0.16	<5.0
Magnesium	5000	4.8		
Manganese	15	.15		
Molybdenum	100	.63		
Nickel	40	.61		
Potassium	5000	31		
Selenium	10	1.2		
Silver	5.0	.31		
Sodium	5000	150		
Strontium	10	.25		
Thallium	10	3		
Tin	100	4		
Titanium	50	.57		
Vanadium	50	1.4		
Zinc	20	.75		

Associated samples MP6398: M43544-22, M43544-23

Results < IDL are shown as zero for calculation purposes
(*) Outside of QC limits
(anr) Analyte not requested

MATRIX SPIKE AND DUPLICATE RESULTS SUMMARY

Login Number: M43544
Account: EXXONSS - Exxon Service Station
Project: CDM:S/S 3-5805 1425 Massachusetts Ave., Boxborough, MA

QC Batch ID: MP6398
Matrix Type: AQUEOUS

Methods: SW846 6010B
Units: ug/l

Prep Date:			12/06/04					12/06/04	
Metal	M43544-23 Original	MS	Spikelot MPIRWS2	% Rec	QC Limits	M43544-22 Original	DUP	RPD	QC Limits
Aluminum									
Antimony									
Arsenic									
Barium									
Beryllium									
Boron									
Cadmium									
Calcium									
Chromium									
Cobalt									
Copper									
Iron									
Lead	0.0	963	1000	96.3	75-125	3.7	3.8	2.7	0-20
Magnesium									
Manganese									
Molybdenum									
Nickel									
Potassium									
Selenium									
Silver									
Sodium									
Strontium									
Thallium									
Tin									
Titanium									
Vanadium									
Zinc									

Associated samples MP6398: M43544-22, M43544-23

Results < IDL are shown as zero for calculation purposes
(*) Outside of QC limits
(N) Matrix Spike Rec. outside of QC limits
(anr) Analyte not requested

SPIKE BLANK AND LAB CONTROL SAMPLE SUMMARY

Login Number: M43544
Account: EXXONSS - Exxon Service Station
Project: CDM:S/S 3-5805 1425 Massachusetts Ave., Boxborough, MA

QC Batch ID: MP6398
Matrix Type: AQUEOUS

Methods: SW846 6010B
Units: ug/l

Prep Date:	12/06/04				12/06/04				
Metal	BSP Result	Spikelot MPIRWS2	% Rec	QC Limits	BSD Result	Spikelot MPIRWS2	% Rec	BSD RPD	QC Limit
Aluminum									
Antimony									
Arsenic									
Barium									
Beryllium									
Boron									
Cadmium									
Calcium									
Chromium									
Cobalt									
Copper									
Iron									
Lead	978	1000	97.8	80-120	958	1000	95.8	2.1	
Magnesium									
Manganese									
Molybdenum									
Nickel									
Potassium									
Selenium									
Silver									
Sodium									
Strontium									
Thallium									
Tin									
Titanium									
Vanadium									
Zinc									

Associated samples MP6398: M43544-22, M43544-23

Results < IDL are shown as zero for calculation purposes
(*) Outside of QC limits
(anr) Analyte not requested

SERIAL DILUTION RESULTS SUMMARY

Login Number: M43544
Account: EXXONSS - Exxon Service Station
Project: CDM:S/S 3-5805 1425 Massachusetts Ave., Boxborough, MA

QC Batch ID: MP6398
Matrix Type: AQUEOUS

Methods: SW846 6010B
Units: ug/l

Prep Date: 12/06/04

Metal	M43544-23 Original	SDL 1:5	RPD	QC Limits
Aluminum				
Antimony				
Arsenic				
Barium				
Beryllium				
Boron				
Cadmium				
Calcium				
Chromium				
Cobalt				
Copper				
Iron				
Lead	0.00	0.00	NC	0-10
Magnesium				
Manganese				
Molybdenum				
Nickel				
Potassium				
Selenium				
Silver				
Sodium				
Strontium				
Thallium				
Tin				
Titanium				
Vanadium				
Zinc				

Associated samples MP6398: M43544-22, M43544-23

Results < IDL are shown as zero for calculation purposes
(*) Outside of QC limits
(anr) Analyte not requested

General Chemistry

QC Data Summaries

7

Includes the following where applicable:

- Method Blank and Blank Spike Summaries
- Duplicate Summaries
- Matrix Spike Summaries

METHOD BLANK AND SPIKE RESULTS SUMMARY
GENERAL CHEMISTRY

Login Number: M43544
Account: EXXONSS - Exxon Service Station
Project: CDM:S/S 3-5805 1425 Massachusetts Ave., Boxborough, MA

Analyte	Batch ID	RL	MB Result	Units	Spike Amount	BSP Result	BSP %Recov	QC Limits
Color, Apparent	GN15387	5	<5	CU				
Petroleum Hydrocarbons	GP5079/GN15422	0.60	<0.60	mg/l	5	5.0	100.0	80-120%
Solids, Total Suspended	GN15380	4.0	<4.0	mg/l				
Turbidity	GN15391	0.50	<0.50	NTU				

Associated Samples:
Batch GN15380: M43544-22, M43544-23
Batch GN15387: M43544-22, M43544-23
Batch GN15391: M43544-22, M43544-23
Batch GP5079: M43544-22, M43544-23

7.1

7

DUPLICATE RESULTS SUMMARY
GENERAL CHEMISTRY

Login Number: M43544
Account: EXXONSS - Exxon Service Station
Project: CDM:S/S 3-5805 1425 Massachusetts Ave., Boxborough, MA

Analyte	Batch ID	QC Sample	Units	Original Result	DUP Result	RPD	QC Limits
Color, Apparent	GN15387	M43544-23	CU	<5	<5	0.0	0-20%
Petroleum Hydrocarbons	GP5079/GN15422	M43544-22	mg/l	<0.61	<0.61	0.0	0-20%
Solids, Total Suspended	GN15380	M43487-1	mg/l	<4.0	<4.0	0.0	0-20%
Turbidity	GN15391	M43544-23	NTU	<0.50	<0.50	0.0	0-20%

Associated Samples:
Batch GN15380: M43544-22, M43544-23
Batch GN15387: M43544-22, M43544-23
Batch GN15391: M43544-22, M43544-23
Batch GP5079: M43544-22, M43544-23

7.2
7

MATRIX SPIKE RESULTS SUMMARY
GENERAL CHEMISTRY

Login Number: M43544
Account: EXXONSS - Exxon Service Station
Project: CDM:S/S 3-5805 1425 Massachusetts Ave., Boxborough, MA

Analyte	Batch ID	QC Sample	Units	Original Result	Spike Amount	MS Result	%Rec	QC Limits
Petroleum Hydrocarbons	GP5079/GN15422	M43544-23	mg/l	<0.61	5.1	5.4	105.9	75-125%

Associated Samples:
Batch GP5079: M43544-22, M43544-23

7.3

7

New England
ACCUTEST.
Laboratories

12/30/04

Technical Report for

Exxon Service Station

CDM:S/S 3-5805 1425 Massachusetts Ave., Boxborough, MA

Accutest Job Number: M43822

Sampling Date: 12/14/04

Report to:

Camp Dresser & McKee
50 Hampshire Avenue
Cambridge, MA 02139

ATTN: Jon Welch

Total number of pages in report: 52

ACCREDITED IN ACCORDANCE WITH nelac

Test results contained within this data package meet the requirements of the National Environmental Laboratory Accreditation Conference and/or state specific certification programs as applicable.

Reza Pand
Lab Director

Certifications: MA (M-MA136) CT (PH-0109) NH (250204) RI (00071) ME (MA136) FL (E87579) NY (23346) NJ (MA926) NAVY USACE

This report shall not be reproduced, except in its entirety, without the written approval of Accutest Laboratories.

ACCUTEST Laboratories

SAMPLE DELIVERY GROUP CASE NARRATIVE

Client: Exxon Service Station **Job No:** M43822

Site: CDM:S/S 3-5805 1425 Massachusetts Ave., Boxborough, MA **Report Date** 12/30/2004 11:24:46 A

12 Samples and 1 Trip Blank were collected on 12/14/2004 and were received at Accutest on 12/14/2004 properly preserved, at 1.5 Deg. C and intact. These Samples received an Accutest job number of M43822. A listing of the Laboratory Sample ID, Client Sample ID and dates of collection are presented in the Results Summary Section of this report.

Except as noted below, all method specified calibrations and quality control performance criteria were met for this job. For more information, please refer to QC summary pages.

Volatiles by GCMS By Method EPA 524.2 REV 4.1

Matrix: AQ **Batch ID:** MSD2413

- All samples were analyzed within the recommended method holding time.
- All method blanks for this batch meet method specific criteria.
- Sample(s) M43822-2DUP were used as the QC samples indicated.

Volatiles by GCMS By Method EPA 624

Matrix: AQ **Batch ID:** MSA1676

- All samples were analyzed within the recommended method holding time.
- All method blanks for this batch meet method specific criteria.
- Sample(s) M43822-10MS, M43822-10MSD were used as the QC samples indicated.
- Matrix Spike/Matrix Spike Duplicate Recovery(s) for Methyl Tert Butyl Ether are outside control limits. Outside control limits due to high level in sample relative to spike amount.
- Only BTX and MTBE requested.

Metals By Method SW846 6010B

Matrix: AQ **Batch ID:** MP6449

- All samples were digested within the recommended method holding time.
- All samples were analyzed within the recommended method holding time.
- All method blanks for this batch meet method specific criteria.
- Sample(s) M43863-1MS, M43863-1SDL, M43863-1DUP were used as the QC samples for metals.
- RPD(s) for Duplicate for Lead are outside control limits for sample MP6449-D1. RPD acceptable due to low duplicate and sample concentrations.

Wet Chemistry By Method EPA 110.2

Matrix: AQ **Batch ID:** GN15482

- All samples were analyzed within the recommended method holding time.
- All method blanks for this batch meet method specific criteria.
- Sample(s) M43822-5DUP were used as the QC samples for Color, Apparent.

Wet Chemistry By Method EPA 160.2

Matrix: AQ	Batch ID: GN15499

- All samples were analyzed within the recommended method holding time.
- All method blanks for this batch meet method specific criteria.
- Sample(s) M43822-5DUP were used as the QC samples for Solids, Total Suspended.

Wet Chemistry By Method EPA 180.1

Matrix: AQ	Batch ID: GN15483

- All samples were analyzed within the recommended method holding time.
- All method blanks for this batch meet method specific criteria.
- Sample(s) M43822-5DUP were used as the QC samples for Turbidity.

Wet Chemistry By Method EPA 418.1

Matrix: AQ	Batch ID: GP5108

- All samples were distilled within the recommended method holding time.
- All samples were analyzed within the recommended method holding time.
- All method blanks for this batch meet method specific criteria.
- Sample(s) M43822-13DUP, M43822-5MS were used as the QC samples for Petroleum Hydrocarbons.

The Accutest Laboratories of New England certifies that all analysis were performed within method specification. It is further recommended that this report to be used in its entirety.The Accutest Laboratories of NE, Laboratory Director or assignee as verified by the signature on the cover page has authorized the release of this report(M43822).

Title: MADEP MCP Response Action Analytical Report Certification Form

MADEP MCP Analytical Method Report Certification Form

Laboratory Name:	Accutest Laboratories of New England	Project #:	M43822
Project Location:	CDM:S/S 3-5805 1425 Massachusetts Ave., Boxborough, MA	MADEP RTN [1]	None

This form provides certifications for the following data set:
M43822-10,M43822-11,M43822-12,M43822-13,M43822-2,M43822-3,M43822-4,M43822-5
M43822-6,M43822-7,M43822-8

Test Method: EPA 524.2 REV 4.1, 624, 110.2, 160.2, 180.1, 418.1, and below

Sample Matrices: Groundwater Soil/Sediment ( ) Drinking Water X Other: ( ) ( )

MCP SW-846 Methods Used As specified in MADEP Compendium of Analytical Methods (Check all that apply)						
	8260B ( )	8151A ( )	8330 ( )	6010B (X)	7470A/1A ( )
	8270C ( )	8081A ( )	VPH ( )	6020 ( )	9014M [2] ( )
	8082 ( )	8021B ( )	EPH ( )	7000 S [3] ( )	7196A ( )

1 List Release Tracking Number (RTN) if known
2 M - SW-846 Method 9014 or MADEP Physiologically Available Cyanide (PAC) Method
3 S - SW-846 Methods 7000 Series (List individual method and analyte)

An affirmative response to questions A, B, C, and D is required for "Presumptive Certainty status

A	Were all samples received by the laboratory in a condition consistent with that described on the Chain-of-Custody documentation for the data set?	☑	Yes	☐ No [1]
B	Were all QA/QC procedures required for the specified analytical method(s) included in this report followed, including the requirement to note and discuss in a narrative QC data that did not meet appropriate performance standards or guidelines?	☑	Yes	☐ No [1]
C	Does the data included in this report meet all the analytical requirements for "Presumptive Certainty", as described in Section 2.0 (a), (b), (c) and (d) of the MADEP document CAM VII A, "Quality Assurance and Quality Control Guidelines for the Acquisition and Reporting of Analytical Data"?	☑	Yes	☐ No [1]
D	**VPH and EPH methods only:** Was the VPH or EPH method run without significant modifications, as specified in Section 11.3?	☑	Yes	☐ No [1]

A response to questions E and F below is required for "Presumptive Certainty" status

E	Were all QC performance standards and recommendations for the specified methods achieved?	☑ Refer to Narrative	Yes	☐ No [1]
F	Were results for all analyte-list compounds/elements for the specified method(s) reported?	☐ Refer to Narrative	Yes	☑ No [1]

[1] ***All Negative responses must be addressed in an attached Environmental Laboratory case narrative.***

I the undersigned, attest under the pains and penalties of perjury that, based upon my personal inquiry of those responsible for obtaining the information, the material contained in this analytical report is, to the best of my knowledge and belief, accurate and complete.

Signature:		**Position:**	**Laboratory Director**
Printed Name:	**Reza Tand**	**Date:**	**12/30/2004**

Sample Summary

Exxon Service Station

CDM:S/S 3-5805 1425 Massachusetts Ave., Boxborough, MA

Job No: M43822

Sample Number	Collected Date	Time By	Received	Matrix Code	Type	Client Sample ID
M43822-1	12/14/04	10:30 RMB	12/14/04	DW	Drinking Water Eff	POET EFF (DUP)
M43822-2	12/14/04	10:30 RMB	12/14/04	DW	Drinking Water Eff	POET EFF
M43822-3	12/14/04	10:40 RMB	12/14/04	DW	Drinking Water	POET MID
M43822-4	12/14/04	10:45 RMB	12/14/04	DW	Drinking Water Inf	POET INF
M43822-5	12/14/04	11:00 RMB	12/14/04	AQ	Effluent3	GAC 3 EFF
M43822-6	12/14/04	11:10 RMB	12/14/04	AQ	Effluent2	GAC 2 EFF
M43822-7	12/14/04	12:40 RMB	12/14/04	AQ	Effluent1	GAC 1 EFF
M43822-8	12/14/04	12:15 RMB	12/14/04	DW	Drinking Water	593 MIDDLE RD
M43822-9	12/14/04	12:15 RMB	12/14/04	DW	Drinking Water	593 MIDDLE RD (DUP)
M43822-10	12/14/04	13:10 RMB	12/14/04	AQ	Effluent	AS EFF
M43822-11	12/14/04	12:55 RMB	12/14/04	AQ	Influent	AS INF
M43822-12	12/14/04	00:00 RMB	12/14/04	DW	Drinking Water TB	TRIP BLANK
M43822-13	12/14/04	12:00 RMB	12/14/04	AQ	Influent	INF

Accutest Laboratories

Report of Analysis

Client Sample ID:	INF		
Lab Sample ID:	M43822-13	**Date Sampled:**	12/14/04
Matrix:	AQ - Influent	**Date Received:**	12/14/04
Method:	EPA 624	**Percent Solids:**	n/a
Project:	CDM:S/S 3-5805 1425 Massachusetts Ave., Boxborough, MA		

	File ID	DF	Analyzed	By	Prep Date	Prep Batch	Analytical Batch
Run #1	A50272.D	10	12/20/04	AMY	n/a	n/a	MSA1676
Run #2							

	Purge Volume
Run #1	5.0 ml
Run #2	

Purgeable Aromatics, MTBE

CAS No.	Compound	Result	RL	Units	Q
71-43-2	Benzene	5.0	5.0	ug/l	
108-88-3	Toluene	85.0	10	ug/l	
100-41-4	Ethylbenzene	101	10	ug/l	
1330-20-7	Xylenes (total)	618	10	ug/l	
1634-04-4	Methyl Tert Butyl Ether	1370	10	ug/l	

CAS No.	Surrogate Recoveries	Run# 1	Run# 2	Limits
17060-07-0	1,2-Dichloroethane-D4 (SUR)	88%		80-127%
2037-26-5	Toluene-D8 (SUR)	99%		85-114%
460-00-4	4-Bromofluorobenzene (SUR)	93%		85-114%

ND = Not detected
RL = Reporting Limit
E = Indicates value exceeds calibration range

J = Indicates an estimated value
B = Indicates analyte found in associated method blank
N = Indicates presumptive evidence of a compound

Accutest Laboratories

Report of Analysis

Client Sample ID:	INF		
Lab Sample ID:	M43822-13	**Date Sampled:**	12/14/04
Matrix:	AQ - Influent	**Date Received:**	12/14/04
		Percent Solids:	n/a
Project:	CDM:S/S 3-5805 1425 Massachusetts Ave., Boxborough, MA		

Metals Analysis

Analyte	Result	RL	Units	DF	Prep	Analyzed By		Method	Prep Method
Lead	<5.0	5.0	ug/l	1	12/16/04	12/20/04	LMN	SW846 6010B [1]	SW846 3010A [2]

(1) Instrument QC Batch: MA5348
(2) Prep QC Batch: MP6449

RL = Reporting Limit

Accutest Laboratories

Report of Analysis

Client Sample ID:	INF		
Lab Sample ID:	M43822-13	**Date Sampled:**	12/14/04
Matrix:	AQ - Influent	**Date Received:**	12/14/04
		Percent Solids:	n/a
Project:	CDM:S/S 3-5805 1425 Massachusetts Ave., Boxborough, MA		

General Chemistry

Analyte	Result	RL	Units	DF	Analyzed	By	Method
Color, Apparent	30	5	CU	1	12/14/04 15:25	MA	EPA 110.2
Petroleum Hydrocarbons	<0.61	0.61	mg/l	1	12/15/04	BF	EPA 418.1
Solids, Total Suspended	<4.0	4.0	mg/l	1	12/16/04	BF	EPA 160.2
Turbidity	8.2	0.50	NTU	1	12/14/04 15:45	MA	EPA 180.1

RL = Reporting Limit

GC/MS Volatiles

QC Data Summaries

Includes the following where applicable:

- Method Blank Summaries
- Blank Spike Summaries
- Matrix Spike and Duplicate Summaries
- Surrogate Recovery Summaries

Method Blank Summary

Job Number: M43822
Account: EXXONSS Exxon Service Station
Project: CDM:S/S 3-5805 1425 Massachusetts Ave., Boxborough, MA

Sample	File ID	DF	Analyzed	By	Prep Date	Prep Batch	Analytical Batch
MSD2413-MB	D40960.D	1	12/15/04	AT	n/a	n/a	MSD2413

The QC reported here applies to the following samples: **Method:** EPA 524.2 REV 4.1

M43822-2, M43822-3, M43822-4, M43822-8, M43822-12

CAS No.	Compound	Result	RL	Units	Q
71-43-2	Benzene	ND	0.50	ug/l	
108-86-1	Bromobenzene	ND	0.50	ug/l	
74-97-5	Bromochloromethane	ND	0.50	ug/l	
75-27-4	Bromodichloromethane	ND	0.50	ug/l	
75-25-2	Bromoform	ND	0.50	ug/l	
74-83-9	Bromomethane	ND	0.50	ug/l	
104-51-8	n-Butylbenzene	ND	0.50	ug/l	
135-98-8	sec-Butylbenzene	ND	0.50	ug/l	
98-06-6	tert-Butylbenzene	ND	0.50	ug/l	
108-90-7	Chlorobenzene	ND	0.50	ug/l	
75-00-3	Chloroethane	ND	0.50	ug/l	
67-66-3	Chloroform	ND	0.50	ug/l	
74-87-3	Chloromethane	ND	0.50	ug/l	
95-49-8	o-Chlorotoluene	ND	0.50	ug/l	
106-43-4	p-Chlorotoluene	ND	0.50	ug/l	
56-23-5	Carbon tetrachloride	ND	0.50	ug/l	
75-34-3	1,1-Dichloroethane	ND	0.50	ug/l	
75-35-4	1,1-Dichloroethylene	ND	0.50	ug/l	
563-58-6	1,1-Dichloropropene	ND	0.50	ug/l	
96-12-8	1,2-Dibromo-3-chloropropane	ND	0.50	ug/l	
106-93-4	1,2-Dibromoethane	ND	0.50	ug/l	
107-06-2	1,2-Dichloroethane	ND	0.50	ug/l	
78-87-5	1,2-Dichloropropane	ND	0.50	ug/l	
142-28-9	1,3-Dichloropropane	ND	0.50	ug/l	
594-20-7	2,2-Dichloropropane	ND	0.50	ug/l	
124-48-1	Dibromochloromethane	ND	0.50	ug/l	
74-95-3	Dibromomethane	ND	0.50	ug/l	
75-71-8	Dichlorodifluoromethane	ND	0.50	ug/l	
10061-01-5	cis-1,3-Dichloropropene	ND	0.50	ug/l	
541-73-1	m-Dichlorobenzene	ND	0.50	ug/l	
95-50-1	o-Dichlorobenzene	ND	0.50	ug/l	
106-46-7	p-Dichlorobenzene	ND	0.50	ug/l	
156-60-5	trans-1,2-Dichloroethylene	ND	0.50	ug/l	
156-59-2	cis-1,2-Dichloroethylene	ND	0.50	ug/l	
10061-02-6	trans-1,3-Dichloropropene	ND	0.50	ug/l	
100-41-4	Ethylbenzene	ND	0.50	ug/l	

Method Blank Summary

Job Number: M43822
Account: EXXONSS Exxon Service Station
Project: CDM:S/S 3-5805 1425 Massachusetts Ave., Boxborough, MA

Sample	File ID	DF	Analyzed	By	Prep Date	Prep Batch	Analytical Batch
MSD2413-MB	D40960.D	1	12/15/04	AT	n/a	n/a	MSD2413

The QC reported here applies to the following samples: **Method:** EPA 524.2 REV 4.1

M43822-2, M43822-3, M43822-4, M43822-8, M43822-12

CAS No.	Compound	Result	RL	Units	Q
87-68-3	Hexachlorobutadiene	ND	0.50	ug/l	
98-82-8	Isopropylbenzene	ND	0.50	ug/l	
99-87-6	p-Isopropyltoluene	ND	0.50	ug/l	
75-09-2	Methylene chloride	ND	0.50	ug/l	
1634-04-4	Methyl Tert Butyl Ether	ND	0.50	ug/l	
91-20-3	Naphthalene	ND	0.50	ug/l	
103-65-1	n-Propylbenzene	ND	0.50	ug/l	
100-42-5	Styrene	ND	0.50	ug/l	
630-20-6	1,1,1,2-Tetrachloroethane	ND	0.50	ug/l	
71-55-6	1,1,1-Trichloroethane	ND	0.50	ug/l	
79-34-5	1,1,2,2-Tetrachloroethane	ND	0.50	ug/l	
79-00-5	1,1,2-Trichloroethane	ND	0.50	ug/l	
87-61-6	1,2,3-Trichlorobenzene	ND	0.50	ug/l	
96-18-4	1,2,3-Trichloropropane	ND	0.50	ug/l	
120-82-1	1,2,4-Trichlorobenzene	ND	0.50	ug/l	
95-63-6	1,2,4-Trimethylbenzene	ND	0.50	ug/l	
108-67-8	1,3,5-Trimethylbenzene	ND	0.50	ug/l	
127-18-4	Tetrachloroethylene	ND	0.50	ug/l	
108-88-3	Toluene	ND	0.50	ug/l	
79-01-6	Trichloroethylene	ND	0.50	ug/l	
75-69-4	Trichlorofluoromethane	ND	0.50	ug/l	
75-01-4	Vinyl chloride	ND	0.50	ug/l	
	m,p-Xylene	ND	0.50	ug/l	
95-47-6	o-Xylene	ND	0.50	ug/l	
1330-20-7	Xylenes (total)	ND	0.50	ug/l	

CAS No.	Surrogate Recoveries		Limits
2199-69-1	1,2-Dichlorobenzene-d4	85%	70-130%
460-00-4	4-Bromofluorobenzene	89%	70-130%

CAS No.	Tentatively Identified Compounds	R.T.	Est. Conc.	Units	Q
	Total TIC, Volatile		0	ug/l	

Blank Spike Summary

Job Number: M43822
Account: EXXONSS Exxon Service Station
Project: CDM:S/S 3-5805 1425 Massachusetts Ave., Boxborough, MA

Sample	File ID	DF	Analyzed	By	Prep Date	Prep Batch	Analytical Batch
MSD2413-BS	D40957.D	1	12/15/04	AT	n/a	n/a	MSD2413

The QC reported here applies to the following samples: **Method:** EPA 524.2 REV 4.1

M43822-2, M43822-3, M43822-4, M43822-8, M43822-12

CAS No.	Compound	Spike ug/l	BSP ug/l	BSP %	Limits
71-43-2	Benzene	5	4.9	98	70-130
108-86-1	Bromobenzene	5	4.9	98	70-130
74-97-5	Bromochloromethane	5	4.9	98	70-130
75-27-4	Bromodichloromethane	5	5.0	100	70-130
75-25-2	Bromoform	5	4.7	94	70-130
74-83-9	Bromomethane	5	4.1	82	70-130
104-51-8	n-Butylbenzene	5	5.1	102	70-130
135-98-8	sec-Butylbenzene	5	4.8	96	70-130
98-06-6	tert-Butylbenzene	5	5.0	100	70-130
108-90-7	Chlorobenzene	5	4.6	92	70-130
75-00-3	Chloroethane	5	4.0	80	70-130
67-66-3	Chloroform	5	5.0	100	70-130
74-87-3	Chloromethane	5	5.2	104	70-130
95-49-8	o-Chlorotoluene	5	5.0	100	70-130
106-43-4	p-Chlorotoluene	5	5.0	100	70-130
56-23-5	Carbon tetrachloride	5	5.3	106	70-130
75-34-3	1,1-Dichloroethane	5	4.8	96	70-130
75-35-4	1,1-Dichloroethylene	5	5.7	114	70-130
563-58-6	1,1-Dichloropropene	5	5.6	112	70-130
96-12-8	1,2-Dibromo-3-chloropropane	5	5.4	108	70-130
106-93-4	1,2-Dibromoethane	5	4.8	96	70-130
107-06-2	1,2-Dichloroethane	5	5.2	104	70-130
78-87-5	1,2-Dichloropropane	5	4.9	98	70-130
142-28-9	1,3-Dichloropropane	5	4.6	92	70-130
594-20-7	2,2-Dichloropropane	5	5.0	100	70-130
124-48-1	Dibromochloromethane	5	4.8	96	70-130
74-95-3	Dibromomethane	5	4.9	98	70-130
75-71-8	Dichlorodifluoromethane	5	4.2	84	70-130
10061-01-5	cis-1,3-Dichloropropene	5	4.7	94	70-130
541-73-1	m-Dichlorobenzene	5	4.6	92	70-130
95-50-1	o-Dichlorobenzene	5	4.6	92	70-130
106-46-7	p-Dichlorobenzene	5	5.0	100	70-130
156-60-5	trans-1,2-Dichloroethylene	5	5.7	114	70-130
156-59-2	cis-1,2-Dichloroethylene	5	4.9	98	70-130
10061-02-6	trans-1,3-Dichloropropene	5	5.2	104	70-130
100-41-4	Ethylbenzene	5	5.1	102	70-130

Blank Spike Summary

Job Number: M43822
Account: EXXONSS Exxon Service Station
Project: CDM:S/S 3-5805 1425 Massachusetts Ave., Boxborough, MA

Sample	File ID	DF	Analyzed	By	Prep Date	Prep Batch	Analytical Batch
MSD2413-BS	D40957.D	1	12/15/04	AT	n/a	n/a	MSD2413

The QC reported here applies to the following samples: **Method:** EPA 524.2 REV 4.1

M43822-2, M43822-3, M43822-4, M43822-8, M43822-12

CAS No.	Compound	Spike ug/l	BSP ug/l	BSP %	Limits
87-68-3	Hexachlorobutadiene	5	4.6	92	70-130
98-82-8	Isopropylbenzene	5	5.2	104	70-130
99-87-6	p-Isopropyltoluene	5	5.1	102	70-130
75-09-2	Methylene chloride	5	4.5	90	70-130
1634-04-4	Methyl Tert Butyl Ether	5	5.5	110	70-130
91-20-3	Naphthalene	5	4.5	90	70-130
103-65-1	n-Propylbenzene	5	5.0	100	70-130
100-42-5	Styrene	5	4.9	98	70-130
630-20-6	1,1,1,2-Tetrachloroethane	5	4.9	98	70-130
71-55-6	1,1,1-Trichloroethane	5	5.4	108	70-130
79-34-5	1,1,2,2-Tetrachloroethane	5	4.8	96	70-130
79-00-5	1,1,2-Trichloroethane	5	4.7	94	70-130
87-61-6	1,2,3-Trichlorobenzene	5	4.4	88	70-130
96-18-4	1,2,3-Trichloropropane	5	4.7	94	70-130
120-82-1	1,2,4-Trichlorobenzene	5	4.7	94	70-130
95-63-6	1,2,4-Trimethylbenzene	5	4.8	96	70-130
108-67-8	1,3,5-Trimethylbenzene	5	5.0	100	70-130
127-18-4	Tetrachloroethylene	5	4.7	94	70-130
108-88-3	Toluene	5	4.5	90	70-130
79-01-6	Trichloroethylene	5	5.0	100	70-130
75-69-4	Trichlorofluoromethane	5	5.4	108	70-130
75-01-4	Vinyl chloride	5	4.5	90	70-130
	m,p-Xylene	10	8.9	89	70-130
95-47-6	o-Xylene	5	4.9	98	70-130
1330-20-7	Xylenes (total)	15	13.8	92	70-130

CAS No.	Surrogate Recoveries	BSP	Limits
2199-69-1	1,2-Dichlorobenzene-d4	116%	70-130%
460-00-4	4-Bromofluorobenzene	100%	70-130%

Duplicate Summary

Job Number: M43822
Account: EXXONSS Exxon Service Station
Project: CDM:S/S 3-5805 1425 Massachusetts Ave., Boxborough, MA

Sample	File ID	DF	Analyzed	By	Prep Date	Prep Batch	Analytical Batch
M43822-2DUP	D40968.D	1	12/15/04	AT	n/a	n/a	MSD2413
M43822-2	D40967.D	1	12/15/04	AT	n/a	n/a	MSD2413

The QC reported here applies to the following samples: **Method:** EPA 524.2 REV 4.1

M43822-2, M43822-3, M43822-4, M43822-8, M43822-12

CAS No.	Compound	M43822-2 ug/l	Q	DUP ug/l	Q	RPD	Limits
71-43-2	Benzene	ND		ND		nc	30
108-86-1	Bromobenzene	ND		ND		nc	30
74-97-5	Bromochloromethane	ND		ND		nc	30
75-27-4	Bromodichloromethane	ND		ND		nc	30
75-25-2	Bromoform	ND		ND		nc	30
74-83-9	Bromomethane	ND		ND		nc	30
104-51-8	n-Butylbenzene	ND		ND		nc	30
135-98-8	sec-Butylbenzene	ND		ND		nc	30
98-06-6	tert-Butylbenzene	ND		ND		nc	30
108-90-7	Chlorobenzene	ND		ND		nc	30
75-00-3	Chloroethane	ND		ND		nc	30
67-66-3	Chloroform	0.44		0.46	J	4	30
74-87-3	Chloromethane	ND		ND		nc	30
95-49-8	o-Chlorotoluene	ND		ND		nc	30
106-43-4	p-Chlorotoluene	ND		ND		nc	30
56-23-5	Carbon tetrachloride	ND		ND		nc	30
75-34-3	1,1-Dichloroethane	ND		ND		nc	30
75-35-4	1,1-Dichloroethylene	ND		ND		nc	30
563-58-6	1,1-Dichloropropene	ND		ND		nc	30
96-12-8	1,2-Dibromo-3-chloropropane	ND		ND		nc	30
106-93-4	1,2-Dibromoethane	ND		ND		nc	30
107-06-2	1,2-Dichloroethane	ND		ND		nc	30
78-87-5	1,2-Dichloropropane	ND		ND		nc	30
142-28-9	1,3-Dichloropropane	ND		ND		nc	30
594-20-7	2,2-Dichloropropane	ND		ND		nc	30
124-48-1	Dibromochloromethane	ND		ND		nc	30
74-95-3	Dibromomethane	ND		ND		nc	30
75-71-8	Dichlorodifluoromethane	ND		ND		nc	30
10061-01-5	cis-1,3-Dichloropropene	ND		ND		nc	30
541-73-1	m-Dichlorobenzene	ND		ND		nc	30
95-50-1	o-Dichlorobenzene	ND		ND		nc	30
106-46-7	p-Dichlorobenzene	ND		ND		nc	30
156-60-5	trans-1,2-Dichloroethylene	ND		ND		nc	30
156-59-2	cis-1,2-Dichloroethylene	ND		ND		nc	30
10061-02-6	trans-1,3-Dichloropropene	ND		ND		nc	30
100-41-4	Ethylbenzene	ND		ND		nc	30

Duplicate Summary

Job Number: M43822
Account: EXXONSS Exxon Service Station
Project: CDM:S/S 3-5805 1425 Massachusetts Ave., Boxborough, MA

Sample	File ID	DF	Analyzed	By	Prep Date	Prep Batch	Analytical Batch
M43822-2DUP	D40968.D	1	12/15/04	AT	n/a	n/a	MSD2413
M43822-2	D40967.D	1	12/15/04	AT	n/a	n/a	MSD2413

The QC reported here applies to the following samples: **Method:** EPA 524.2 REV 4.1

M43822-2, M43822-3, M43822-4, M43822-8, M43822-12

CAS No.	Compound	M43822-2 ug/l	Q	DUP ug/l	Q	RPD	Limits
87-68-3	Hexachlorobutadiene	ND		ND		nc	30
98-82-8	Isopropylbenzene	ND		ND		nc	30
99-87-6	p-Isopropyltoluene	ND		ND		nc	30
75-09-2	Methylene chloride	ND		ND		nc	30
1634-04-4	Methyl Tert Butyl Ether	ND		ND		nc	30
91-20-3	Naphthalene	ND		ND		nc	30
103-65-1	n-Propylbenzene	ND		ND		nc	30
100-42-5	Styrene	ND		ND		nc	30
630-20-6	1,1,1,2-Tetrachloroethane	ND		ND		nc	30
71-55-6	1,1,1-Trichloroethane	ND		ND		nc	30
79-34-5	1,1,2,2-Tetrachloroethane	ND		ND		nc	30
79-00-5	1,1,2-Trichloroethane	ND		ND		nc	30
87-61-6	1,2,3-Trichlorobenzene	ND		ND		nc	30
96-18-4	1,2,3-Trichloropropane	ND		ND		nc	30
120-82-1	1,2,4-Trichlorobenzene	ND		ND		nc	30
95-63-6	1,2,4-Trimethylbenzene	ND		ND		nc	30
108-67-8	1,3,5-Trimethylbenzene	ND		ND		nc	30
127-18-4	Tetrachloroethylene	ND		ND		nc	30
108-88-3	Toluene	ND		ND		nc	30
79-01-6	Trichloroethylene	ND		ND		nc	30
75-69-4	Trichlorofluoromethane	ND		ND		nc	30
75-01-4	Vinyl chloride	ND		ND		nc	30
	m,p-Xylene	ND		ND		nc	30
95-47-6	o-Xylene	ND		ND		nc	30
1330-20-7	Xylenes (total)	ND		ND		nc	30

CAS No.	Surrogate Recoveries	DUP	M43822-2	Limits
2199-69-1	1,2-Dichlorobenzene-d4	79%	100%	70-130%
460-00-4	4-Bromofluorobenzene	106%	101%	70-130%

Volatile Surrogate Recovery Summary

Job Number: M43822
Account: EXXONSS Exxon Service Station
Project: CDM:S/S 3-5805 1425 Massachusetts Ave., Boxborough, MA

Method: EPA 524.2 REV 4.1 **Matrix:** AQ

Samples and QC shown here apply to the above method

Lab Sample ID	Lab File ID	S1	S2
M43822-2	D40967.D	100.0	101.0
M43822-3	D40970.D	76.0	101.0
M43822-4	D40971.D	84.0	88.0
M43822-8	D40969.D	91.0	98.0
M43822-12	D40962.D	87.0	92.0
M43822-2DUP	D40968.D	79.0	106.0
MSD2413-BS	D40957.D	116.0	100.0
MSD2413-MB	D40960.D	85.0	89.0

Surrogate Compounds	Recovery Limits
S1 = 1,2-Dichlorobenzene-d4	70-130%
S2 = 4-Bromofluorobenzene	70-130%

Method Blank Summary

Job Number: M43822
Account: EXXONSS Exxon Service Station
Project: CDM:S/S 3-5805 1425 Massachusetts Ave., Boxborough, MA

Sample	File ID	DF	Analyzed	By	Prep Date	Prep Batch	Analytical Batch
MSA1676-MB	A50267.D	1	12/20/04	AMY	n/a	n/a	MSA1676

The QC reported here applies to the following samples: **Method:** EPA 624

M43822-5, M43822-6, M43822-7, M43822-10, M43822-11, M43822-13

CAS No.	Compound	Result	RL	Units	Q
71-43-2	Benzene	ND	0.50	ug/l	
100-41-4	Ethylbenzene	ND	1.0	ug/l	
1634-04-4	Methyl Tert Butyl Ether	ND	1.0	ug/l	
108-88-3	Toluene	ND	1.0	ug/l	
1330-20-7	Xylenes (total)	ND	1.0	ug/l	

CAS No.	Surrogate Recoveries		Limits
17060-07-0	1,2-Dichloroethane-D4 (SUR)	89%	80-127%
2037-26-5	Toluene-D8 (SUR)	104%	85-114%
460-00-4	4-Bromofluorobenzene (SUR)	87%	85-114%

Blank Spike/Blank Spike Duplicate Summary

Job Number: M43822
Account: EXXONSS Exxon Service Station
Project: CDM:S/S 3-5805 1425 Massachusetts Ave., Boxborough, MA

Sample	File ID	DF	Analyzed	By	Prep Date	Prep Batch	Analytical Batch
MSA1676-BS	A50265.D	1	12/20/04	AMY	n/a	n/a	MSA1676
MSA1676-BSD	A50268.D	1	12/20/04	AMY	n/a	n/a	MSA1676

The QC reported here applies to the following samples: **Method:** EPA 624

M43822-5, M43822-6, M43822-7, M43822-10, M43822-11, M43822-13

CAS No.	Compound	Spike ug/l	BSP ug/l	BSP %	BSD ug/l	BSD %	RPD	Limits Rec/RPD
71-43-2	Benzene	20	20.0	100	15.7	79	24	37-151/30
100-41-4	Ethylbenzene	20	21.3	107	15.9	80	29	37-162/30
1634-04-4	Methyl Tert Butyl Ether	20	23.2	116	18.5	93	23	62-147/30
108-88-3	Toluene	20	19.1	96	14.6	73	27	47-150/30
1330-20-7	Xylenes (total)	60	73.2	122	57.3	96	24	73-139/30

CAS No.	Surrogate Recoveries	BSP	BSD	Limits
17060-07-0	1,2-Dichloroethane-D4 (SUR)	94%	84%	80-127%
2037-26-5	Toluene-D8 (SUR)	96%	89%	85-114%
460-00-4	4-Bromofluorobenzene (SUR)	96%	96%	85-114%

Matrix Spike/Matrix Spike Duplicate Summary

Job Number: M43822
Account: EXXONSS Exxon Service Station
Project: CDM:S/S 3-5805 1425 Massachusetts Ave., Boxborough, MA

Sample	File ID	DF	Analyzed	By	Prep Date	Prep Batch	Analytical Batch
M43822-10MS	A50278.D	5	12/20/04	AMY	n/a	n/a	MSA1676
M43822-10MSD	A50279.D	5	12/20/04	AMY	n/a	n/a	MSA1676
M43822-10	A50277.D	1	12/20/04	AMY	n/a	n/a	MSA1676

The QC reported here applies to the following samples: **Method:** EPA 624

M43822-5, M43822-6, M43822-7, M43822-10, M43822-11, M43822-13

CAS No.	Compound	M43822-10 ug/l	Q	Spike ug/l	MS ug/l	MS %	MSD ug/l	MSD %	RPD	Limits Rec/RPD
71-43-2	Benzene	ND		100	97.3	97	103	103	6	37-151/30
100-41-4	Ethylbenzene	ND		100	104	104	104	104	0	37-162/30
1634-04-4	Methyl Tert Butyl Ether	416		100	409	-7* [a]	417	1* [a]	2	48-150/39
108-88-3	Toluene	ND		100	94.6	95	93.8	94	1	47-150/30
1330-20-7	Xylenes (total)	3.4		300	317	105	292	96	8	66-144/38

CAS No.	Surrogate Recoveries	MS	MSD	M43822-10	Limits
17060-07-0	1,2-Dichloroethane-D4 (SUR)	101%	90%	96%	80-127%
2037-26-5	Toluene-D8 (SUR)	97%	105%	101%	85-114%
460-00-4	4-Bromofluorobenzene (SUR)	92%	102%	89%	85-114%

(a) Outside control limits due to high level in sample relative to spike amount.

Volatile Surrogate Recovery Summary

Job Number: M43822
Account: EXXONSS Exxon Service Station
Project: CDM:S/S 3-5805 1425 Massachusetts Ave., Boxborough, MA

Method: EPA 624 **Matrix:** AQ

Samples and QC shown here apply to the above method

Lab Sample ID	Lab File ID	S1	S2	S3
M43822-5	A50274.D	90.0	92.0	91.0
M43822-6	A50275.D	93.0	97.0	90.0
M43822-7	A50276.D	87.0	99.0	91.0
M43822-10	A50277.D	96.0	101.0	89.0
M43822-11	A50271.D	93.0	99.0	90.0
M43822-13	A50272.D	88.0	99.0	93.0
M43822-10MS	A50278.D	101.0	97.0	92.0
M43822-10MSD	A50279.D	90.0	105.0	102.0
MSA1676-BS	A50265.D	94.0	96.0	96.0
MSA1676-BSD	A50268.D	84.0	89.0	96.0
MSA1676-MB	A50267.D	89.0	104.0	87.0

Surrogate Compounds	Recovery Limits
S1 = 1,2-Dichloroethane-D4 (SUR)	80-127%
S2 = Toluene-D8 (SUR)	85-114%
S3 = 4-Bromofluorobenzene (SUR)	85-114%

Metals Analysis

QC Data Summaries

Includes the following where applicable:

- Method Blank Summaries
- Matrix Spike and Duplicate Summaries
- Blank Spike and Lab Control Sample Summaries
- Serial Dilution Summaries

BLANK RESULTS SUMMARY
Part 2 - Method Blanks

Login Number: M43822
Account: EXXONSS - Exxon Service Station
Project: CDM:S/S 3-5805 1425 Massachusetts Ave., Boxborough, MA

QC Batch ID: MP6449
Matrix Type: AQUEOUS

Methods: SW846 6010B
Units: ug/l

Prep Date: 12/16/04

Metal	RL	IDL	MB raw	final
Aluminum	200	8.1		
Antimony	6.0	1.7	anr	
Arsenic	5.0	2.2	anr	
Barium	200	.64	anr	
Beryllium	4.0	.12	anr	
Boron	100	.88		
Cadmium	4.0	.3	anr	
Calcium	5000	2.3		
Chromium	10	.26	anr	
Cobalt	50	.81		
Copper	25	.47		
Iron	100	9.7		
Lead	5.0	1.5	-0.59	<5.0
Magnesium	5000	4.8		
Manganese	15	.15		
Molybdenum	100	.63		
Nickel	40	.61	anr	
Potassium	5000	31		
Selenium	10	1.2	anr	
Silver	5.0	.31	anr	
Sodium	5000	150		
Strontium	10	.25		
Thallium	10	3	anr	
Tin	100	4		
Titanium	50	.57		
Vanadium	50	1.4	anr	
Zinc	20	.75	anr	

Associated samples MP6449: M43822-5, M43822-13

Results < IDL are shown as zero for calculation purposes
(*) Outside of QC limits
(anr) Analyte not requested

MATRIX SPIKE AND DUPLICATE RESULTS SUMMARY

Login Number: M43822
Account: EXXONSS - Exxon Service Station
Project: CDM:S/S 3-5805 1425 Massachusetts Ave., Boxborough, MA

QC Batch ID: MP6449
Matrix Type: AQUEOUS

Methods: SW846 6010B
Units: ug/l

Prep Date:			12/16/04					12/16/04	
Metal	M43863-1 Original	MS	Spikelot MPIRWS2	% Rec	QC Limits	M43863-1 Original	DUP	RPD	QC Limits
Aluminum									
Antimony	anr								
Arsenic	anr								
Barium	anr								
Beryllium	anr								
Boron									
Cadmium	anr								
Calcium									
Chromium	anr								
Cobalt									
Copper									
Iron									
Lead	0.0	980	1000	98.0	75-125	0.0	1.5	200.0(a)	0-20
Magnesium									
Manganese									
Molybdenum									
Nickel	anr								
Potassium									
Selenium	anr								
Silver	anr								
Sodium									
Strontium									
Thallium	anr								
Tin									
Titanium									
Vanadium	anr								
Zinc	anr								

Associated samples MP6449: M43822-5, M43822-13

Results < IDL are shown as zero for calculation purposes
(*) Outside of QC limits
(N) Matrix Spike Rec. outside of QC limits
(anr) Analyte not requested
(a) RPD acceptable due to low duplicate and sample concentrations.

Blank Spike/Blank Spike Duplicate Summary

Job Number: M44377
Account: EXXONSS Exxon Service Station
Project: CDM:S/S 3-5805 1425 Massachusetts Ave., Boxborough, MA

Sample	File ID	DF	Analyzed	By	Prep Date	Prep Batch	Analytical Batch
MSA1687-BS	A50625.D	1	01/12/05	AMY	n/a	n/a	MSA1687
MSA1687-BSD	A50626.D	1	01/12/05	AMY	n/a	n/a	MSA1687

The QC reported here applies to the following samples: **Method:** EPA 624

M44377-1, M44377-6

CAS No.	Compound	Spike ug/l	BSP ug/l	BSP %	BSD ug/l	BSD %	RPD	Limits Rec/RPD
71-43-2	Benzene	20	26.7	134	25.4	127	5	37-151/30
100-41-4	Ethylbenzene	20	24.8	124	24.4	122	2	37-162/30
1634-04-4	Methyl Tert Butyl Ether	20	14.8	74	13.8	69	7	62-147/30
108-88-3	Toluene	20	26.5	133	25.1	126	5	47-150/30
1330-20-7	Xylenes (total)	60	60.2	100	62.7	105	4	73-139/30

CAS No.	Surrogate Recoveries	BSP	BSD	Limits
17060-07-0	1,2-Dichloroethane-D4 (SUR)	99%	101%	80-127%
2037-26-5	Toluene-D8 (SUR)	106%	105%	85-114%
460-00-4	4-Bromofluorobenzene (SUR)	100%	107%	85-114%

Blank Spike/Blank Spike Duplicate Summary

Job Number: M44377
Account: EXXONSS Exxon Service Station
Project: CDM:S/S 3-5805 1425 Massachusetts Ave., Boxborough, MA

Sample	File ID	DF	Analyzed	By	Prep Date	Prep Batch	Analytical Batch
MSA1689-BS	A50682.D	1	01/17/05	AMY	n/a	n/a	MSA1689
MSA1689-BSD	A50683.D	1	01/17/05	AMY	n/a	n/a	MSA1689

The QC reported here applies to the following samples: **Method:** EPA 624

M44377-2, M44377-3, M44377-4, M44377-5

CAS No.	Compound	Spike ug/l	BSP ug/l	BSP %	BSD ug/l	BSD %	RPD	Limits Rec/RPD
71-43-2	Benzene	20	18.9	95	20.3	102	7	37-151/30
100-41-4	Ethylbenzene	20	19.9	100	21.3	107	7	37-162/30
1634-04-4	Methyl Tert Butyl Ether	20	25.9	130	25.3	127	2	62-147/30
108-88-3	Toluene	20	19.5	98	21.0	105	7	47-150/30
1330-20-7	Xylenes (total)	60	60.8	101	61.9	103	2	73-139/30

CAS No.	Surrogate Recoveries	BSP	BSD	Limits
17060-07-0	1,2-Dichloroethane-D4 (SUR)	100%	107%	80-127%
2037-26-5	Toluene-D8 (SUR)	96%	101%	85-114%
460-00-4	4-Bromofluorobenzene (SUR)	97%	93%	85-114%

Method Blank Summary

Job Number: M44377
Account: EXXONSS Exxon Service Station
Project: CDM:S/S 3-5805 1425 Massachusetts Ave., Boxborough, MA

Sample	File ID	DF	Analyzed	By	Prep Date	Prep Batch	Analytical Batch
MSA1687-MB	A50628.D	1	01/12/05	AMY	n/a	n/a	MSA1687

The QC reported here applies to the following samples: **Method:** EPA 624

M44377-1, M44377-6

CAS No.	Compound	Result	RL	Units	Q
71-43-2	Benzene	ND	0.50	ug/l	
100-41-4	Ethylbenzene	ND	1.0	ug/l	
1634-04-4	Methyl Tert Butyl Ether	ND	1.0	ug/l	
108-88-3	Toluene	ND	1.0	ug/l	
1330-20-7	Xylenes (total)	ND	1.0	ug/l	

CAS No.	Surrogate Recoveries		Limits
17060-07-0	1,2-Dichloroethane-D4 (SUR)	94%	80-127%
2037-26-5	Toluene-D8 (SUR)	108%	85-114%
460-00-4	4-Bromofluorobenzene (SUR)	98%	85-114%

Method Blank Summary

Job Number: M44377
Account: EXXONSS Exxon Service Station
Project: CDM:S/S 3-5805 1425 Massachusetts Ave., Boxborough, MA

Sample	File ID	DF	Analyzed	By	Prep Date	Prep Batch	Analytical Batch
MSA1689-MB	A50685.D	1	01/17/05	AMY	n/a	n/a	MSA1689

The QC reported here applies to the following samples: **Method:** EPA 624

M44377-2, M44377-3, M44377-4, M44377-5

CAS No.	Compound	Result	RL	Units	Q
71-43-2	Benzene	ND	0.50	ug/l	
100-41-4	Ethylbenzene	ND	1.0	ug/l	
1634-04-4	Methyl Tert Butyl Ether	ND	1.0	ug/l	
108-88-3	Toluene	ND	1.0	ug/l	
1330-20-7	Xylenes (total)	ND	1.0	ug/l	

CAS No.	Surrogate Recoveries		Limits
17060-07-0	1,2-Dichloroethane-D4 (SUR)	100%	80-127%
2037-26-5	Toluene-D8 (SUR)	100%	85-114%
460-00-4	4-Bromofluorobenzene (SUR)	89%	85-114%

Matrix Spike/Matrix Spike Duplicate Summary

Job Number: M44377
Account: EXXONSS Exxon Service Station
Project: CDM:S/S 3-5805 1425 Massachusetts Ave., Boxborough, MA

Sample	File ID	DF	Analyzed	By	Prep Date	Prep Batch	Analytical Batch
M44370-8MS	A50642.D	5	01/13/05	AMY	n/a	n/a	MSA1687
M44370-8MSD	A50643.D	5	01/13/05	AMY	n/a	n/a	MSA1687
M44370-8	A50641.D	1	01/13/05	AMY	n/a	n/a	MSA1687

The QC reported here applies to the following samples: **Method:** EPA 624

M44377-1, M44377-6

CAS No.	Compound	M44370-8 ug/l	Q	Spike ug/l	MS ug/l	MS %	MSD ug/l	MSD %	RPD	Limits Rec/RPD
71-43-2	Benzene	0.78		100	144	143	123	122	16	37-151/30
100-41-4	Ethylbenzene	ND		100	139	139	111	111	22	37-162/30
1634-04-4	Methyl Tert Butyl Ether	7.1		100	119	112	84.7	78	34	48-150/39
108-88-3	Toluene	ND		100	136	136	122	122	11	47-150/30
1330-20-7	Xylenes (total)	ND		300	448	149* [a]	356	119	23	66-144/38

CAS No.	Surrogate Recoveries	MS	MSD	M44370-8	Limits
17060-07-0	1,2-Dichloroethane-D4 (SUR)	105%	103%	109%	80-127%
2037-26-5	Toluene-D8 (SUR)	105%	112%	105%	85-114%
460-00-4	4-Bromofluorobenzene (SUR)	109%	103%	101%	85-114%

(a) Outside control limits due to possible matrix interference. Refer to Blank Spike.

Matrix Spike/Matrix Spike Duplicate Summary

Job Number: M44377
Account: EXXONSS Exxon Service Station
Project: CDM:S/S 3-5805 1425 Massachusetts Ave., Boxborough, MA

Sample	File ID	DF	Analyzed	By	Prep Date	Prep Batch	Analytical Batch
M44479-1MS	A50698.D	5	01/18/05	AMY	n/a	n/a	MSA1689
M44479-1MSD	A50699.D	5	01/18/05	AMY	n/a	n/a	MSA1689
M44479-1	A50690.D	1	01/17/05	AMY	n/a	n/a	MSA1689

The QC reported here applies to the following samples: **Method:** EPA 624

M44377-2, M44377-3, M44377-4, M44377-5

CAS No.	Compound	M44479-1 ug/l	Q	Spike ug/l	MS ug/l	MS %	MSD ug/l	MSD %	RPD	Limits Rec/RPD
71-43-2	Benzene	ND		100	94.7	95	102	102	7	37-151/30
100-41-4	Ethylbenzene	ND		100	116	116	105	105	10	37-162/30
1634-04-4	Methyl Tert Butyl Ether	ND		100	112	112	129	129	14	48-150/39
108-88-3	Toluene	ND		100	92.1	92	91.9	92	0	47-150/30
1330-20-7	Xylenes (total)	ND		300	297	99	305	102	3	66-144/38

CAS No.	Surrogate Recoveries	MS	MSD	M44479-1	Limits
17060-07-0	1,2-Dichloroethane-D4 (SUR)	94%	107%	106%	80-127%
2037-26-5	Toluene-D8 (SUR)	94%	108%	100%	85-114%
460-00-4	4-Bromofluorobenzene (SUR)	93%	98%	87%	85-114%

Volatile Surrogate Recovery Summary

Job Number: M44377
Account: EXXONSS Exxon Service Station
Project: CDM:S/S 3-5805 1425 Massachusetts Ave., Boxborough, MA

Method: EPA 624 **Matrix:** AQ

Samples and QC shown here apply to the above method

Lab Sample ID	Lab File ID	S1	S2	S3
M44377-1	A50648.D	100.0	109.0	97.0
M44377-1	A50645.D	103.0	96.0	98.0
M44377-2	A50696.D	111.0	95.0	91.0
M44377-3	A50701.D	101.0	94.0	88.0
M44377-3	A50697.D	104.0	103.0	105.0
M44377-4	A50694.D	102.0	96.0	92.0
M44377-5	A50695.D	99.0	100.0	85.0
M44377-6	A50644.D	102.0	103.0	94.0
M44370-8MS	A50642.D	105.0	105.0	109.0
M44370-8MSD	A50643.D	103.0	112.0	103.0
M44479-1MS	A50698.D	94.0	94.0	93.0
M44479-1MSD	A50699.D	107.0	108.0	98.0
MSA1687-BS	A50625.D	99.0	106.0	100.0
MSA1687-BSD	A50626.D	101.0	105.0	107.0
MSA1687-MB	A50628.D	94.0	108.0	98.0
MSA1689-BS	A50682.D	100.0	96.0	97.0
MSA1689-BSD	A50683.D	107.0	101.0	93.0
MSA1689-MB	A50685.D	100.0	100.0	89.0

Surrogate Compounds	Recovery Limits
S1 = 1,2-Dichloroethane-D4 (SUR)	80-127%
S2 = Toluene-D8 (SUR)	85-114%
S3 = 4-Bromofluorobenzene (SUR)	85-114%

Metals Analysis

QC Data Summaries

Includes the following where applicable:

- Method Blank Summaries
- Matrix Spike and Duplicate Summaries
- Blank Spike and Lab Control Sample Summaries
- Serial Dilution Summaries

BLANK RESULTS SUMMARY
Part 2 - Method Blanks

Login Number: M44377
Account: EXXONSS - Exxon Service Station
Project: CDM:S/S 3-5805 1425 Massachusetts Ave., Boxborough, MA

QC Batch ID: MP6526
Matrix Type: AQUEOUS

Methods: SW846 6010B
Units: ug/l

Prep Date: 01/13/05

Metal	RL	IDL	MB raw	final
Aluminum	200	8.1		
Antimony	6.0	1.7		
Arsenic	5.0	2.2		
Barium	200	.64		
Beryllium	4.0	.12		
Boron	100	.88		
Cadmium	4.0	.3		
Calcium	5000	2.3		
Chromium	10	.26		
Cobalt	50	.81		
Copper	25	.47		
Iron	100	9.7		
Lead	5.0	1.5	0.41	<5.0
Magnesium	5000	4.8		
Manganese	15	.15		
Molybdenum	100	.63		
Nickel	40	.61		
Potassium	5000	31		
Selenium	10	1.2		
Silver	5.0	.31		
Sodium	5000	150		
Strontium	10	.25		
Thallium	10	3		
Tin	100	4		
Titanium	50	.57		
Vanadium	50	1.4		
Zinc	20	.75		

Associated samples MP6526: M44377-1, M44377-6

Results < IDL are shown as zero for calculation purposes
(*) Outside of QC limits
(anr) Analyte not requested

MATRIX SPIKE AND DUPLICATE RESULTS SUMMARY

Login Number: M44377
Account: EXXONSS - Exxon Service Station
Project: CDM:S/S 3-5805 1425 Massachusetts Ave., Boxborough, MA

QC Batch ID: MP6526
Matrix Type: AQUEOUS

Methods: SW846 6010B
Units: ug/l

Prep Date:				01/13/05				01/13/05	
Metal	M44377-6 Original	MS	Spikelot MPIRWS2	% Rec	QC Limits	M44377-6 Original	DUP	RPD	QC Limits
Aluminum									
Antimony									
Arsenic									
Barium									
Beryllium									
Boron									
Cadmium									
Calcium									
Chromium									
Cobalt									
Copper									
Iron									
Lead	2.2	958	1000	95.6	75-125	2.2	1.9	14.6	0-20
Magnesium									
Manganese									
Molybdenum									
Nickel									
Potassium									
Selenium									
Silver									
Sodium									
Strontium									
Thallium									
Tin									
Titanium									
Vanadium									
Zinc									

Associated samples MP6526: M44377-1, M44377-6

Results < IDL are shown as zero for calculation purposes
(*) Outside of QC limits
(N) Matrix Spike Rec. outside of QC limits
(anr) Analyte not requested

SPIKE BLANK AND LAB CONTROL SAMPLE SUMMARY

Login Number: M44377
Account: EXXONSS - Exxon Service Station
Project: CDM:S/S 3-5805 1425 Massachusetts Ave., Boxborough, MA

QC Batch ID: MP6526
Matrix Type: AQUEOUS

Methods: SW846 6010B
Units: ug/l

Prep Date:			01/13/05					01/13/05	
Metal	BSP Result	Spikelot MPIRWS2	% Rec	QC Limits	BSD Result	Spikelot MPIRWS2	% Rec	BSD RPD	QC Limit
Aluminum									
Antimony									
Arsenic									
Barium									
Beryllium									
Boron									
Cadmium									
Calcium									
Chromium									
Cobalt									
Copper									
Iron									
Lead	966	1000	96.6	80-120	925	1000	92.5	4.3	
Magnesium									
Manganese									
Molybdenum									
Nickel									
Potassium									
Selenium									
Silver									
Sodium									
Strontium									
Thallium									
Tin									
Titanium									
Vanadium									
Zinc									

Associated samples MP6526: M44377-1, M44377-6

Results < IDL are shown as zero for calculation purposes
(*) Outside of QC limits
(anr) Analyte not requested

SERIAL DILUTION RESULTS SUMMARY

Login Number: M44377
Account: EXXONSS - Exxon Service Station
Project: CDM:S/S 3-5805 1425 Massachusetts Ave., Boxborough, MA

QC Batch ID: MP6526
Matrix Type: AQUEOUS

Methods: SW846 6010B
Units: ug/l

Prep Date: 01/13/05

Metal	M44377-6 Original	SDL 1:5	RPD	QC Limits
Aluminum				
Antimony				
Arsenic				
Barium				
Beryllium				
Boron				
Cadmium				
Calcium				
Chromium				
Cobalt				
Copper				
Iron				
Lead	2.24	0.00	100.0(a)	0-10
Magnesium				
Manganese				
Molybdenum				
Nickel				
Potassium				
Selenium				
Silver				
Sodium				
Strontium				
Thallium				
Tin				
Titanium				
Vanadium				
Zinc				

Associated samples MP6526: M44377-1, M44377-6

Results < IDL are shown as zero for calculation purposes
(*) Outside of QC limits
(anr) Analyte not requested
(a) Percent difference acceptable due to low initial sample concentration (< 50 times IDL).

General Chemistry

QC Data Summaries

Includes the following where applicable:

- Method Blank and Blank Spike Summaries
- Duplicate Summaries
- Matrix Spike Summaries

METHOD BLANK AND SPIKE RESULTS SUMMARY
GENERAL CHEMISTRY

Login Number: M44377
Account: EXXONSS - Exxon Service Station
Project: CDM:S/S 3-5805 1425 Massachusetts Ave., Boxborough, MA

Analyte	Batch ID	RL	MB Result	Units	Spike Amount	BSP Result	BSP %Recov	QC Limits
Color, Apparent	GN15642	5	<5	CU				
Petroleum Hydrocarbons	GP5178/GN15651	0.60	<0.60	mg/l	5	5.0	100.0	80-120%
Solids, Total Suspended	GN15670	4.0	<4.0	mg/l				
Turbidity	GN15641	0.50	<0.50	NTU				

Associated Samples:
Batch GN15641: M44377-1, M44377-6
Batch GN15642: M44377-1, M44377-6
Batch GN15670: M44377-1, M44377-6
Batch GP5178: M44377-1, M44377-6

DUPLICATE RESULTS SUMMARY
GENERAL CHEMISTRY

Login Number: M44377
Account: EXXONSS - Exxon Service Station
Project: CDM:S/S 3-5805 1425 Massachusetts Ave., Boxborough, MA

Analyte	Batch ID	QC Sample	Units	Original Result	DUP Result	RPD	QC Limits
Color, Apparent	GN15642	M44377-6	CU	<5	<5	0.0	0-20%
Petroleum Hydrocarbons	GP5178/GN15651	M44367-1A	mg/l	<0.61	<0.61	0.0	0-20%
Solids, Total Suspended	GN15670	M44377-6	mg/l	<4.0	<4.0	0.0	0-20%
Turbidity	GN15641	M44377-6	NTU	<0.50	<0.50	0.0	0-20%

Associated Samples:
Batch GN15641: M44377-1, M44377-6
Batch GN15642: M44377-1, M44377-6
Batch GN15670: M44377-1, M44377-6
Batch GP5178: M44377-1, M44377-6

MATRIX SPIKE RESULTS SUMMARY
GENERAL CHEMISTRY

Login Number: M44377
Account: EXXONSS - Exxon Service Station
Project: CDM:S/S 3-5805 1425 Massachusetts Ave., Boxborough, MA

Analyte	Batch ID	QC Sample	Units	Original Result	Spike Amount	MS Result	%Rec	QC Limits
Petroleum Hydrocarbons	GP5178/GN15651	M44368-1	mg/l	<0.61	5.1	4.8	94.1	75-125%

Associated Samples:
Batch GP5178: M44377-1, M44377-6

Misc. Forms

Custody Documents and Other Forms

Includes the following where applicable:

- Sample Tracking Chronicle

Accutest Laboratories

Internal Sample Tracking Chronicle

Exxon Service Station

Job No: M44377

CDM:S/S 3-5805 1425 Massachusetts Ave., Boxborough, MA

Sample Number	Method	Analyzed	By	Prepped	By	Test Codes
M44377-1 Collected: 11-JAN-05 14:05 By: RMB Received: 11-JAN-05 By: RS INF-GW-11105						
M44377-1	EPA 180.1	11-JAN-05 16:30	MA			TURB
M44377-1	EPA 110.2	11-JAN-05 16:50	MA			COL
M44377-1	EPA 418.1	12-JAN-05	BF	12-JAN-05	BF	PHC
M44377-1	EPA 624	13-JAN-05 13:23	AMY			V624BTXM
M44377-1	EPA 624	13-JAN-05 15:23	AMY			V624BTXM
M44377-1	EPA 160.2	14-JAN-05	BF			TSS
M44377-1	SW846 6010B	14-JAN-05 12:00	LMN	13-JAN-05	OP	PB
M44377-2 Collected: 11-JAN-05 14:00 By: RMB Received: 11-JAN-05 By: RS INF-MW17-11105						
M44377-2	EPA 624	17-JAN-05 22:42	AMY			V624BTXM
M44377-3 Collected: 11-JAN-05 13:55 By: RMB Received: 11-JAN-05 By: RS ASINF-GW-11105						
M44377-3	EPA 624	17-JAN-05 23:21	AMY			V624BTXM
M44377-3	EPA 624	18-JAN-05 09:20	AMY			V624BTXM
M44377-4 Collected: 11-JAN-05 13:50 By: RMB Received: 11-JAN-05 By: RS ASEFF-GW-11105						
M44377-4	EPA 624	17-JAN-05 21:23	AMY			V624BTXM
M44377-5 Collected: 11-JAN-05 13:40 By: RMB Received: 11-JAN-05 By: RS MID2-GW-11105						
M44377-5	EPA 624	17-JAN-05 22:02	AMY			V624BTXM
M44377-6 Collected: 11-JAN-05 13:30 By: RMB Received: 11-JAN-05 By: RS EFF-GW-11105						
M44377-6	EPA 180.1	11-JAN-05 16:30	MA			TURB
M44377-6	EPA 110.2	11-JAN-05 16:50	MA			COL
M44377-6	EPA 418.1	12-JAN-05	BF	12-JAN-05	BF	PHC
M44377-6	EPA 624	13-JAN-05 12:42	AMY			V624BTXM
M44377-6	EPA 160.2	14-JAN-05	BF			TSS

Internal Sample Tracking Chronicle

Exxon Service Station

Job No: M44377

CDM:S/S 3-5805 1425 Massachusetts Ave., Boxborough, MA

Sample Number	Method	Analyzed	By	Prepped	By	Test Codes
M44377-6	SW846 6010B	14-JAN-05 11:48	LMN	13-JAN-05	OP	PB

ACCUTEST Laboratories

CHAIN OF CUSTODY

495 Tech Center West, Bldg. 1
Marlboro, MA 01752
508-481-6200 FAX: 508-481-6200

1 of 1

Accutest Job #: M44377

Client Information | **Facility Information**

EXXONMOBIL CORPORATION - Regional Laboratory Program Northeast

Consultants Company Name: CDM	Project Name: XOM Boxboro
Address: 50 Hampshire St.	Street: 1425 Mass. Ave
City: Cambridge State: MA Zip: 02140	City: Boxboro State: MA
Project Contact: Jon Welch	ExxonMobil Contact: Eric Errico
Sampler's Name: Ryan Bouldin	ExxonMobil Contact Phone #:
Phone #: 617-452-6000 Ext. Fax #:	Location ID#: 3-5805 WBS#:
AFE #:	PO#: Line#:

Analytical Information

Accutest Sample #	Field ID / Point of Collection	Collection Date	Collection Time	Sampled by	Matrix	# of bottles	HCL	NaOH	HNO3	H2SO4	MEOH	Encore	Other	None	BTEX 8260 ☐ 624 ☒ 8021 ☐ 524 ☐ MTBE ☒ TBA ☐ Naphthalene ☐ Oxygenates ☐	VOC AQUEOUS 8260 ☐ 624 ☐ 524 ☒ STD ☐ TCL ☐ PPL ☐ MTBE ☐ TBA ☐ Oxygenates ☐	VOC SOIL 8260 ☐ STD ☐ TCL ☐ PPL ☐ MTBE ☐ TBA ☐ Oxygenates ☐ 5035/LOW ☐ 5035MED ☐	VPH RANGES ☐ TARGETS ☐	EPH RANGES ☐ TARGET (PAH) ☐ DIESEL (PAH) ☐	TPH-CTDEP ☐ TPH418.1 ☒	TPH-MAINE GRO ☐ DRO ☐	TPH-8015 GRO ☐ TPH-8015 DRO ☐	METALS TOTAL ☐ DISSOLVED ☐ HM8 ☐ HM5 ☐	METALS TCLP ☐ SPLP ☐ HM8 ☐ HM5 ☐	Total Lead (Unfiltered)	TSS	Color / Turbidity
36	Inf-GW-11105	1.11.05	1405	RMB	GW	2	✓								✓												
	Inf-GW-11105	↓	↓	↓	↓	2				✓										✓							
	Inf-GW-11105					1			✓																✓		
	Inf-GW-11105		↓			1								✓												✓	✓
-2	Inf-MW17-11105		1400			2	✓								✓												
-3	ASInf-GW-11105		1355			2	✓								✓												
-4	ASEff-GW-11105		1350			2	✓								✓												
	~~Mid1-GW-11105~~ RMB		~~1345~~			~~2~~	✓								✓												
-5	Mid2-GW-11105		1340			2	✓								✓												
-6	Eff-GW-11105		1330			4	✓			✓					✓					✓							
	Eff-GW-11105	↓	1330	↓	↓	2			✓					✓											✓	✓	✓

Turnaround Time (Business days)

- ☒ Std. 10 Business Days — Approved By:/Date
- ☐ 8 Day RUSH
- ☒ 5 Day RUSH
- ☐ 3 Day *EMERGENCY*
- ☐ 2 Day *EMERGENCY*
- ☐ 1 Day EMERGENCY

Emergency T/A is for FAX or Lablink Data

Data Deliverable Information

- ☐ Commercial "A"
- ☐ Commercial "B"
- ☐ Full Deliverables
- ☐ Other
- ☐ FULL CLP
- ☐ State Forms
- ☐ Disk Deliverable Format _____

Site Specific: QC Yes ☐ No ☐ If yes, indicate QC sample in Comments and submit triplicate volume.

Comments / Remarks

MCP Presumptive Certainty Required
- 5 Day TAT on Inf-GW-11105 & Eff-GW-11105 samples
- GW1 Stds Apply

Loc. 1C, 5E, 4B, 4E4

Sample Custody must be documented below each time samples change possession, including courier delivery.

Relinquished by Sampler:	Date Time:	Received by:	Relinquished by:	Date Time:	Received by:
1 Ryan M Bouldin	1.11.05 1500	1 [signature]	2		2
Relinquished by: 3	Date Time:	Received by: 3	Relinquished by: 4	Date Time:	Received by: 4
Relinquished by: 5	Date Time:	Received by: 5	Seal #	Preserved where applicable ☐	On Ice ☐ Temp 3.4°C

New England ACCUTEST Laboratories

02/14/05

Technical Report for

Exxon Service Station

CDM:S/S 3-5805 1425 Massachusetts Ave., Boxborough, MA

Accutest Job Number: M44980

Sampling Date: 02/09/05

Report to:

Camp Dresser & McKee
50 Hampshire Avenue
Cambridge, MA 02139

ATTN: Jon Welch

Total number of pages in report: 5

Accredited in accordance with nelac

Test results contained within this data package meet the requirements of the National Environmental Laboratory Accreditation Conference and/or state specific certification programs as applicable.

Reza Pand
Lab Director

Certifications: MA (M-MA136) CT (PH-0109) NH (250204) RI (00071) ME (MA136) FL (E87579) NY (23346) NJ (MA926) NAVY USACE

This report shall not be reproduced, except in its entirety, without the written approval of Accutest Laboratories.

Sample Summary

Exxon Service Station

CDM:S/S 3-5805 1425 Massachusetts Ave., Boxborough, MA

Job No: M44980

Sample Number	Collected Date	Time By	Received	Matrix Code	Type	Client Sample ID
M44980-1	02/09/05	15:15 CGH	02/10/05	AQ	Influent	INF-GW-02/09/05
M44980-2	02/09/05	15:20 CGH	02/10/05	AQ	Effluent	EFF-GW-02/09/05

Accutest Laboratories

Report of Analysis

Client Sample ID:	INF-GW-02/09/05		
Lab Sample ID:	M44980-1	**Date Sampled:**	02/09/05
Matrix:	AQ - Influent	**Date Received:**	02/10/05
		Percent Solids:	n/a
Project:	CDM:S/S 3-5805 1425 Massachusetts Ave., Boxborough, MA		

Metals Analysis

Analyte	Result	RL	Units	DF	Prep	Analyzed	By	Method	Prep Method
Lead	25.8	5.0	ug/l	1	02/11/05	02/14/05	LMN	SW846 6010B [1]	SW846 3010A [2]

(1) Instrument QC Batch: MA5489
(2) Prep QC Batch: MP6628

RL = Reporting Limit

ACCUTEST Laboratories

CHAIN OF CUSTODY

495 Tech Center West, Bldg. 1
Marlboro, MA 01752
508-481-6200 FAX: 508-481-6200

Accutest Job #: M44980

Client Information | **Facility Information**

EXXONMOBIL CORPORATION - Regional Laboratory Program Northeast

Consultants Company Name: CDM	Project Name: ExxonMobil Boxborough
Address: 50 Hampshire St	Street:
City: Cambridge State: MA Zip: 02139	City: State:
Project Contact: Jon Welch	ExxonMobil Contact:
Sampler's Name: Chris Hayward	ExxonMobil Contact Phone #:
Phone #: 617.452.6322 Ext. Fax #: 617.452.8322	Location ID# WBS#
AFE #:	PO# Line#

Analytical Information

BTEX 8260 ☐ 624 ☐ 8021 ☐ 524 ☐ MTBE ☐ TBA ☐ Naphthalene ☐ Oxygenates ☐
VOC AQUEOUS 8260 ☐ 624 ☐ 524 ☐ STD ☐ TCL ☐ PPL ☐ MTBE ☐ TBA ☐ Oxygenates ☐
VOC SOIL 8260 ☐ STD ☐ TCL ☐ PPL ☐ MTBE ☐ TBA ☐ Oxygenates ☐ 5035/LOW ☐ 5035MED ☐
VPH RANGES ☐ TARGETS ☐
EPH RANGES ☐ TARGET (PAH) ☐ DIESEL (PAH) ☐
TPH-CTDEP ☐ TPH418.1 ☐
TPH-MAINE GRO ☐ DRO ☐
TPH-8015 GRO ☐ TPH-8015 DRO ☐
METALS TOTAL ☐ DISSOLVED ☐ HM8 ☐ HM5 ☐ Phenol
METALS TCLP ☐ SPLP ☐ HM8 ☐ HM5 ☐

Accutest Sample #	Field ID / Point of Collection	Collection Date	Collection Time	Sampled by	Matrix	# of bottles	Preservation HCL	NaOH	HNO3	H2SO4	MEOH	Encore	Other	None	BTEX 8260	VOC AQUEOUS 8260	VOC SOIL 8260	VPH RANGES	EPH RANGES	TPH-CTDEP	TPH-MAINE GRO	TPH-8015 GRO	METALS TOTAL	METALS TCLP
-1	INF-GW-02/09/05	2/9/05	1515	CGH	Aq	1			X														✓	
-2	EFF-GW-02/09/05	2/9/05	1520	CGH	Aq	1			X														✓	

Turnaround Time (Business days)

- ☐ Std. 10 Business Days — Approved By:/Date
- ☐ 8 Day RUSH
- ☐ 5 Day RUSH
- ☐ 3 Day *EMERGENCY*
- ☑ 2 Day *EMERGENCY* 2/9/05
- ☐ 1 Day EMERGENCY [redacted]

Emergency T/A is for FAX or Lablink Data

Data Deliverable Information

- ☐ Commercial "A"
- ☐ Commercial "B"
- ☐ Full Deliverables
- ☐ Other
- ☐ FULL CLP
- ☐ State Forms
- ☐ Disk Deliverable Format _____

Site Specific: QC Yes ☐ No ☐ If yes, indicate QC sample in Comments and submit triplicate volume.

Comments / Remarks

Loc. 6D

Sample Custody must be documented below each time samples change possession, including courier delivery.

Relinquished by Sampler: [signature]	Date Time: 2/10/05 1000	Received by: 1 CDM Bridge	Relinquished by: 2 [signature]	Date Time: 2-10-05 1:45 PM	Received by: 2 [signature]
Relinquished by: [signature]	Date Time: 2/10/05 1445	Received by: 3 [signature]	Relinquished by: 4	Date Time:	Received by: 4
Relinquished by:	Date Time:	Received by: 5	Seal #	Preserved where applicable ☐	On Ice ☑ 2.2° Temp.

New England ACCUTEST Laboratories

03/07/05

Technical Report for

Exxon Service Station

CDM:S/S 3-5805 1425 Massachusetts Ave., Boxborough, MA

PO#4506003635 WBS#08

Accutest Job Number: M45270

Sampling Date: 02/23/05

Report to:

Camp Dresser & McKee
50 Hampshire Avenue
Cambridge, MA 02139

ATTN: Jon Welch

Total number of pages in report: 45

ACCREDITED IN ACCORDANCE WITH nelac

Test results contained within this data package meet the requirements of the National Environmental Laboratory Accreditation Conference and/or state specific certification programs as applicable.

Reza Pand
Lab Director

Certifications: MA (M-MA136) CT (PH-0109) NH (250204) RI (00071) ME (MA136) FL (E87579) NY (23346) NJ (MA926) NAVY USACE

This report shall not be reproduced, except in its entirety, without the written approval of Accutest Laboratories.

ACCUTEST Laboratories

SAMPLE DELIVERY GROUP CASE NARRATIVE

Client: Exxon Service Station **Job No:** M45270

Site: CDM:S/S 3-5805 1425 Massachusetts Ave., Boxborough, MA **Report Date** 3/7/2005 2:44:48 PM

6 Samples were collected on 02/23/2005 and were received at Accutest on 02/23/2005 properly preserved, at 10.8 Deg. C and intact. These Samples received an Accutest job number of M45270. A listing of the Laboratory Sample ID, Client Sample ID and dates of collection are presented in the Results Summary Section of this report.

Except as noted below, all method specified calibrations and quality control performance criteria were met for this job. For more information, please refer to QC summary pages.

Volatiles by GCMS By Method EPA 624

Matrix: AQ **Batch ID:** MSA1705

- All samples were analyzed within the recommended method holding time.
- Sample(s) M45270-3MS, M45270-3MSD were used as the QC samples indicated.
- All method blanks for this batch meet method specific criteria.
- Only BTX and MTBE requested.

Matrix: AQ **Batch ID:** MSD2447

- All samples were analyzed within the recommended method holding time.
- All method blanks for this batch meet method specific criteria.
- Only BTX and MTBE requested.

Matrix: AQ **Batch ID:** MSL150

- All samples were analyzed within the recommended method holding time.
- Sample(s) M45267-4MS, M45267-4MSD were used as the QC samples indicated.
- All method blanks for this batch meet method specific criteria.
- Matrix Spike/Matrix Spike Duplicate Recovery(s) for Methyl Tert Butyl Ether are outside control limits. Outside control limits due to possible matrix interference. Refer to Blank Spike.
- Only BTX and MTBE requested.
- Sample(s) M45267-4MS, M45267-4MSD have surrogates outside control limits. Confirmed by MS/MSD

Metals By Method SW846 6010B

Matrix: AQ **Batch ID:** MP6669

- All samples were digested within the recommended method holding time.
- All samples were analyzed within the recommended method holding time.
- All method blanks for this batch meet method specific criteria.
- Sample(s) M45270-5DUP, M45270-5MS, M45270-5SDL were used as the QC samples for metals.

Wet Chemistry By Method EPA 110.2

Matrix: AQ	Batch ID: GN15936

- All samples were analyzed within the recommended method holding time.
- All method blanks for this batch meet method specific criteria.
- Sample(s) M45270-5DUP were used as the QC samples for Color, Apparent.
- M45270-5 for Color, Apparent: pH at the time of analysis 6.82.
- M45270-1 for Color, Apparent: pH at the time of analysis 6.54.

Wet Chemistry By Method EPA 160.2

Matrix: AQ	Batch ID: GN15938

- All samples were analyzed within the recommended method holding time.
- All method blanks for this batch meet method specific criteria.
- Sample(s) M45263-1DUP were used as the QC samples for Solids, Total Suspended.

Wet Chemistry By Method EPA 160.5

Matrix: AQ	Batch ID: GN15934

- All samples were analyzed within the recommended method holding time.
- All method blanks for this batch meet method specific criteria.
- Sample(s) M45270-1DUP were used as the QC samples for Solids, Settleable.

Wet Chemistry By Method EPA 180.1

Matrix: AQ	Batch ID: GN15937

- All samples were analyzed within the recommended method holding time.
- All method blanks for this batch meet method specific criteria.
- Sample(s) M45270-5DUP were used as the QC samples for Turbidity.

Wet Chemistry By Method EPA 418.1

Matrix: AQ	Batch ID: GP5301

- All samples were distilled within the recommended method holding time.
- All samples were analyzed within the recommended method holding time.
- All method blanks for this batch meet method specific criteria.
- Sample(s) M45270-1DUP, M45270-5MS were used as the QC samples for Petroleum Hydrocarbons.

The Accutest Laboratories of New England certifies that all analysis were performed within method specification. It is further recommended that this report to be used in its entirety.The Accutest Laboratories of NE, Laboratory Director or assignee as verified by the signature on the cover page has authorized the release of this report(M45270).

Title: MADEP MCP Response Action Analytical Report Certification Form

MADEP MCP Analytical Method Report Certification Form

Laboratory Name:	Accutest Laboratories of New England	Project #:	M45270
Project Location:	CDM:S/S 3-5805 1425 Massachusetts Ave., Boxborough, MA	MADEP RTN [1]	None

This form provides certifications for the following data set:
M45270-1,M45270-1A,M45270-2,M45270-3,M45270-4,M45270-5,M45270-5A,M45270-6

Test Method: EPA 624, 110.2, 160.2, 160.5, 180.1, 418.1, and below

Sample Matrices: Groundwater X Soil/Sediment ( ) Drinking Water ( ) Other: ( ) ( )

MCP SW-846 Methods Used As specified in MADEP Compendium of Analytical Methods (Check all that apply)					
	8260B ( )	8151A ( )	8330 ( )	6010B (X)	7470A/1A ( )
	8270C ( )	8081A ( )	VPH ( )	6020 ( )	9014M [2] ( )
	8082 ( )	8021B ( )	EPH ( )	7000 S [3] ( )	7196A ( )

1 List Release Tracking Number (RTN) if known
2 M - SW-846 Method 9014 or MADEP Physiologically Available Cyanide (PAC) Method
3 S - SW-846 Methods 7000 Series. List individual method and analyte

An affirmative response to questions A, B, C, and D is required for "Presumptive Certainty status

A	Were all samples received by the laboratory in a condition consistent with that described on the Chain-of-Custody documentation for the data set?	☑	Yes	☐ No [1]
B	Were all QA/QC procedures required for the specified analytical method(s) included in this report followed, including the requirement to note and discuss in a narrative QC data that did not meet appropriate performance standards or guidelines?	☑	Yes	☐ No [1]
C	Does the data included in this report meet all the analytical requirements for "Presumptive Certainty", as described in Section 2.0 (a), (b), (c) and (d) of the MADEP document CAM VII A, "Quality Assurance and Quality Control Guidelines for the Acquisition and Reporting of Analytical Data"?	☑	Yes	☐ No [1]
D	**VPH and EPH methods only:** Was the VPH or EPH method run without significant modifications, as specified in Section 11.3?	☑	Yes	☐ No [1]

A response to questions E and F below is required for "Presumptive Certainty" status

E	Were all QC performance standards and recommendations for the specified methods achieved?	☐ Refer to Narrative	Yes	☑ No [1]
F	Were results for all analyte-list compounds/elements for the specified method(s) reported?	☐ Refer to Narrative	Yes	☑ No [1]

[1] ***All Negative responses must be addressed in an attached Environmental Laboratory case narrative.***

I the undersigned, attest under the pains and penalties of perjury that, based upon my personal inquiry of those responsible for obtaining the information, the material contained in this analytical report is, to the best of my knowledge and belief, accurate and complete.

Signature:		**Position:**	**Laboratory Director**
Printed Name:	**Reza Tand**	**Date:**	**03/07/2005**

Sample Summary

Exxon Service Station

CDM:S/S 3-5805 1425 Massachusetts Ave., Boxborough, MA
Project No: PO#4506003635 WBS#08

Job No: M45270

Sample Number	Collected Date	Time By	Received	Matrix Code	Type	Client Sample ID
M45270-1	02/23/05	14:20 RMB	02/23/05	AQ	Influent	INF
M45270-1A	02/23/05	14:20 RMB	02/23/05	AQ	Influent Filtered	INF
M45270-2	02/23/05	15:00 RMB	02/23/05	AQ	Ground Water	OWS EFF
M45270-3	02/23/05	15:10 RMB	02/23/05	AQ	Effluent	AS EFF
M45270-4	02/23/05	15:20 RMB	02/23/05	AQ	Effluent1	GAC 1 EFF
M45270-5	02/23/05	14:45 RMB	02/23/05	AQ	Effluent2	EFF
M45270-5A	02/23/05	14:45 RMB	02/23/05	AQ	Effluent Filtered	EFF
M45270-6	02/23/05	15:30 RMB	02/23/05	AQ	Effluent3	GAC 2 EFF

Accutest Laboratories

Report of Analysis

Client Sample ID:	INF		
Lab Sample ID:	M45270-1	**Date Sampled:**	02/23/05
Matrix:	AQ - Influent	**Date Received:**	02/23/05
Method:	EPA 624	**Percent Solids:**	n/a
Project:	CDM:S/S 3-5805 1425 Massachusetts Ave., Boxborough, MA		

	File ID	DF	Analyzed	By	Prep Date	Prep Batch	Analytical Batch
Run #1	L4115.D	1	03/01/05	AMY	n/a	n/a	MSL150
Run #2							

	Purge Volume
Run #1	5.0 ml
Run #2	

Purgeable Aromatics, MTBE

CAS No.	Compound	Result	RL	Units	Q
71-43-2	Benzene	ND	0.50	ug/l	
108-88-3	Toluene	ND	1.0	ug/l	
100-41-4	Ethylbenzene	ND	1.0	ug/l	
1330-20-7	Xylenes (total)	ND	1.0	ug/l	
1634-04-4	Methyl Tert Butyl Ether	117	1.0	ug/l	

CAS No.	Surrogate Recoveries	Run# 1	Run# 2	Limits
17060-07-0	1,2-Dichloroethane-D4 (SUR)	131%		76-138%
2037-26-5	Toluene-D8 (SUR)	105%		86-114%
460-00-4	4-Bromofluorobenzene (SUR)	96%		76-114%

ND = Not detected
RL = Reporting Limit
E = Indicates value exceeds calibration range

J = Indicates an estimated value
B = Indicates analyte found in associated method blank
N = Indicates presumptive evidence of a compound

Accutest Laboratories

Report of Analysis

Client Sample ID:	INF		
Lab Sample ID:	M45270-1	**Date Sampled:**	02/23/05
Matrix:	AQ - Influent	**Date Received:**	02/23/05
		Percent Solids:	n/a
Project:	CDM:S/S 3-5805 1425 Massachusetts Ave., Boxborough, MA		

Metals Analysis

Analyte	Result	RL	Units	DF	Prep	Analyzed By		Method	Prep Method
Lead	<5.0	5.0	ug/l	1	02/25/05	02/25/05	LMN	SW846 6010B [1]	SW846 3010A [2]

(1) Instrument QC Batch: MA5512
(2) Prep QC Batch: MP6669

RL = Reporting Limit

Accutest Laboratories

Report of Analysis

Client Sample ID:	INF		
Lab Sample ID:	M45270-1	**Date Sampled:**	02/23/05
Matrix:	AQ - Influent	**Date Received:**	02/23/05
		Percent Solids:	n/a
Project:	CDM:S/S 3-5805 1425 Massachusetts Ave., Boxborough, MA		

General Chemistry

Analyte	Result	RL	Units	DF	Analyzed	By	Method
Color, Apparent [a]	30	5	CU	1	02/23/05 16:40	MA	EPA 110.2
Petroleum Hydrocarbons	<0.61	0.61	mg/l	1	02/25/05	BF	EPA 418.1
Solids, Settleable	<0.10	0.10	ml/l/hr	1	02/23/05 17:10	MA	EPA 160.5
Solids, Total Suspended	21.0	4.0	mg/l	1	02/24/05	BF	EPA 160.2
Turbidity	11.6	0.50	NTU	1	02/23/05 16:55	MA	EPA 180.1

(a) pH at the time of analysis 6.54.

RL = Reporting Limit

Accutest Laboratories

Report of Analysis

Client Sample ID:	INF		
Lab Sample ID:	M45270-1A	**Date Sampled:**	02/23/05
Matrix:	AQ - Influent Filtered	**Date Received:**	02/23/05
		Percent Solids:	n/a
Project:	CDM:S/S 3-5805 1425 Massachusetts Ave., Boxborough, MA		

Metals Analysis

Analyte	Result	RL	Units	DF	Prep	Analyzed By		Method	Prep Method
Lead	<5.0	5.0	ug/l	1	02/25/05	02/25/05	LMN	SW846 6010B [1]	SW846 3010A [2]

(1) Instrument QC Batch: MA5512
(2) Prep QC Batch: MP6669

RL = Reporting Limit

GC/MS Volatiles

QC Data Summaries

Includes the following where applicable:

- Method Blank Summaries
- Blank Spike Summaries
- Matrix Spike and Duplicate Summaries
- Surrogate Recovery Summaries

Method Blank Summary

Job Number: M45270
Account: EXXONSS Exxon Service Station
Project: CDM:S/S 3-5805 1425 Massachusetts Ave., Boxborough, MA

Sample	File ID	DF	Analyzed	By	Prep Date	Prep Batch	Analytical Batch
MSD2447-MB	D41773.D	1	02/25/05	AT	n/a	n/a	MSD2447

The QC reported here applies to the following samples: **Method:** EPA 624

M45270-5

CAS No.	Compound	Result	RL	Units	Q
71-43-2	Benzene	ND	0.50	ug/l	
100-41-4	Ethylbenzene	ND	1.0	ug/l	
1634-04-4	Methyl Tert Butyl Ether	ND	1.0	ug/l	
108-88-3	Toluene	ND	1.0	ug/l	
1330-20-7	Xylenes (total)	ND	1.0	ug/l	

CAS No.	Surrogate Recoveries		Limits
17060-07-0	1,2-Dichloroethane-D4 (SUR)	84%	76-138%
2037-26-5	Toluene-D8 (SUR)	97%	86-114%
460-00-4	4-Bromofluorobenzene (SUR)	96%	76-114%

Method Blank Summary

Job Number: M45270
Account: EXXONSS Exxon Service Station
Project: CDM:S/S 3-5805 1425 Massachusetts Ave., Boxborough, MA

Sample	File ID	DF	Analyzed	By	Prep Date	Prep Batch	Analytical Batch
MSL150-MB	L4107.D	1	02/28/05	AMY	n/a	n/a	MSL150

The QC reported here applies to the following samples: **Method:** EPA 624

M45270-1

CAS No.	Compound	Result	RL	Units	Q
71-43-2	Benzene	ND	0.50	ug/l	
100-41-4	Ethylbenzene	ND	1.0	ug/l	
1634-04-4	Methyl Tert Butyl Ether	ND	1.0	ug/l	
108-88-3	Toluene	ND	1.0	ug/l	
1330-20-7	Xylenes (total)	ND	1.0	ug/l	

CAS No.	Surrogate Recoveries		Limits
17060-07-0	1,2-Dichloroethane-D4 (SUR)	115%	76-138%
2037-26-5	Toluene-D8 (SUR)	103%	86-114%
460-00-4	4-Bromofluorobenzene (SUR)	99%	76-114%

Method Blank Summary

Job Number: M45270
Account: EXXONSS Exxon Service Station
Project: CDM:S/S 3-5805 1425 Massachusetts Ave., Boxborough, MA

Sample	File ID	DF	Analyzed	By	Prep Date	Prep Batch	Analytical Batch
MSA1705-MB	A51189.D	1	03/02/05	AT	n/a	n/a	MSA1705

The QC reported here applies to the following samples: **Method:** EPA 624

M45270-2, M45270-3, M45270-4, M45270-6

CAS No.	Compound	Result	RL	Units	Q
71-43-2	Benzene	ND	0.50	ug/l	
100-41-4	Ethylbenzene	ND	1.0	ug/l	
1634-04-4	Methyl Tert Butyl Ether	ND	1.0	ug/l	
108-88-3	Toluene	ND	1.0	ug/l	
1330-20-7	Xylenes (total)	ND	1.0	ug/l	

CAS No.	Surrogate Recoveries		Limits
17060-07-0	1,2-Dichloroethane-D4 (SUR)	95%	76-138%
2037-26-5	Toluene-D8 (SUR)	96%	86-114%
460-00-4	4-Bromofluorobenzene (SUR)	95%	76-114%

Blank Spike Summary

Job Number: M45270
Account: EXXONSS Exxon Service Station
Project: CDM:S/S 3-5805 1425 Massachusetts Ave., Boxborough, MA

Sample	File ID	DF	Analyzed	By	Prep Date	Prep Batch	Analytical Batch
MSD2447-BS	D41771.D	1	02/25/05	AT	n/a	n/a	MSD2447

The QC reported here applies to the following samples: **Method:** EPA 624

M45270-5

CAS No.	Compound	Spike ug/l	BSP ug/l	BSP %	Limits
71-43-2	Benzene	20	25.5	128	37-151
100-41-4	Ethylbenzene	20	22.7	114	37-162
1634-04-4	Methyl Tert Butyl Ether	20	22.2	111	58-150
108-88-3	Toluene	20	22.1	111	47-150
1330-20-7	Xylenes (total)	60	64.0	107	68-136

CAS No.	Surrogate Recoveries	BSP	Limits
17060-07-0	1,2-Dichloroethane-D4 (SUR)	100%	76-138%
2037-26-5	Toluene-D8 (SUR)	103%	86-114%
460-00-4	4-Bromofluorobenzene (SUR)	108%	76-114%

Blank Spike Summary

Job Number: M45270
Account: EXXONSS Exxon Service Station
Project: CDM:S/S 3-5805 1425 Massachusetts Ave., Boxborough, MA

Sample	File ID	DF	Analyzed	By	Prep Date	Prep Batch	Analytical Batch
MSL150-BS	L4106.D	1	02/28/05	AMY	n/a	n/a	MSL150

The QC reported here applies to the following samples: **Method:** EPA 624

M45270-1

CAS No.	Compound	Spike ug/l	BSP ug/l	BSP %	Limits
71-43-2	Benzene	20	24.8	124	37-151
100-41-4	Ethylbenzene	20	21.6	108	37-162
1634-04-4	Methyl Tert Butyl Ether	20	24.7	124	58-150
108-88-3	Toluene	20	23.7	119	47-150
1330-20-7	Xylenes (total)	60	70.0	117	68-136

CAS No.	Surrogate Recoveries	BSP	Limits
17060-07-0	1,2-Dichloroethane-D4 (SUR)	113%	76-138%
2037-26-5	Toluene-D8 (SUR)	102%	86-114%
460-00-4	4-Bromofluorobenzene (SUR)	100%	76-114%

Blank Spike/Blank Spike Duplicate Summary

Job Number: M45270
Account: EXXONSS Exxon Service Station
Project: CDM:S/S 3-5805 1425 Massachusetts Ave., Boxborough, MA

Sample	File ID	DF	Analyzed	By	Prep Date	Prep Batch	Analytical Batch
MSA1705-BS	A51186.D	1	03/02/05	AT	n/a	n/a	MSA1705
MSA1705-BSD	A51187.D	1	03/02/05	AT	n/a	n/a	MSA1705

The QC reported here applies to the following samples: **Method:** EPA 624

M45270-2, M45270-3, M45270-4, M45270-6

CAS No.	Compound	Spike ug/l	BSP ug/l	BSP %	BSD ug/l	BSD %	RPD	Limits Rec/RPD
71-43-2	Benzene	20	21.1	106	20.7	104	2	37-151/30
100-41-4	Ethylbenzene	20	19.9	100	19.1	96	4	37-162/30
1634-04-4	Methyl Tert Butyl Ether	20	24.3	122	22.0	110	10	58-150/30
108-88-3	Toluene	20	20.6	103	18.8	94	9	47-150/30
1330-20-7	Xylenes (total)	60	65.7	110	61.9	103	6	68-136/30

CAS No.	Surrogate Recoveries	BSP	BSD	Limits
17060-07-0	1,2-Dichloroethane-D4 (SUR)	110%	95%	76-138%
2037-26-5	Toluene-D8 (SUR)	97%	93%	86-114%
460-00-4	4-Bromofluorobenzene (SUR)	98%	92%	76-114%

Matrix Spike/Matrix Spike Duplicate Summary

Job Number: M45270
Account: EXXONSS Exxon Service Station
Project: CDM:S/S 3-5805 1425 Massachusetts Ave., Boxborough, MA

Sample	File ID	DF	Analyzed	By	Prep Date	Prep Batch	Analytical Batch
M45267-4MS	L4119.D	5	03/01/05	AMY	n/a	n/a	MSL150
M45267-4MSD	L4120.D	5	03/01/05	AMY	n/a	n/a	MSL150
M45267-4	L4118.D	1	03/01/05	AMY	n/a	n/a	MSL150

The QC reported here applies to the following samples: **Method:** EPA 624

M45270-1

CAS No.	Compound	M45267-4 ug/l	Q	Spike ug/l	MS ug/l	MS %	MSD ug/l	MSD %	RPD	Limits Rec/RPD
71-43-2	Benzene	ND		100	145	145	142	142	2	37-151/30
100-41-4	Ethylbenzene	ND		100	111	111	107	107	4	37-162/30
1634-04-4	Methyl Tert Butyl Ether	ND		100	159	159* [a]	167	167* [a]	5	46-150/24
108-88-3	Toluene	ND		100	143	143	141	141	1	47-150/30
1330-20-7	Xylenes (total)	ND		300	304	101	302	101	1	66-138/28

CAS No.	Surrogate Recoveries	MS	MSD	M45267-4	Limits
17060-07-0	1,2-Dichloroethane-D4 (SUR)	155%* [c]	143%* [c]	141%* [b]	76-138%
2037-26-5	Toluene-D8 (SUR)	109%	107%	114%	86-114%
460-00-4	4-Bromofluorobenzene (SUR)	105%	106%	99%	76-114%

(a) Outside control limits due to possible matrix interference. Refer to Blank Spike.
(b) Confirmed by MS/MSD.
(c) Outside control limits due to possible matrix interfernce. Confirmed by MS/MSD.

Matrix Spike/Matrix Spike Duplicate Summary

Job Number: M45270
Account: EXXONSS Exxon Service Station
Project: CDM:S/S 3-5805 1425 Massachusetts Ave., Boxborough, MA

Sample	File ID	DF	Analyzed	By	Prep Date	Prep Batch	Analytical Batch
M45270-3MS	A51191.D	5	03/02/05	AT	n/a	n/a	MSA1705
M45270-3MSD	A51192.D	5	03/02/05	AT	n/a	n/a	MSA1705
M45270-3	A51190.D	1	03/02/05	AT	n/a	n/a	MSA1705

The QC reported here applies to the following samples: **Method:** EPA 624

M45270-2, M45270-3, M45270-4, M45270-6

CAS No.	Compound	M45270-3 ug/l	Q	Spike ug/l	MS ug/l	MS %	MSD ug/l	MSD %	RPD	Limits Rec/RPD
71-43-2	Benzene	ND		100	106	106	107	107	1	37-151/30
100-41-4	Ethylbenzene	ND		100	105	105	97.8	98	7	37-162/30
1634-04-4	Methyl Tert Butyl Ether	11.7		100	119	107	121	109	2	46-150/24
108-88-3	Toluene	ND		100	88.3	88	99.3	99	12	47-150/30
1330-20-7	Xylenes (total)	ND		300	341	114	335	112	2	66-138/28

CAS No.	Surrogate Recoveries	MS	MSD	M45270-3	Limits
17060-07-0	1,2-Dichloroethane-D4 (SUR)	93%	98%	104%	76-138%
2037-26-5	Toluene-D8 (SUR)	93%	101%	96%	86-114%
460-00-4	4-Bromofluorobenzene (SUR)	109%	106%	97%	76-114%

Volatile Surrogate Recovery Summary

Job Number: M45270
Account: EXXONSS Exxon Service Station
Project: CDM:S/S 3-5805 1425 Massachusetts Ave., Boxborough, MA

Method: EPA 624 **Matrix:** AQ

Samples and QC shown here apply to the above method

Lab Sample ID	Lab File ID	S1	S2	S3
M45270-1	L4115.D	131.0	105.0	96.0
M45270-2	A51196.D	106.0	93.0	93.0
M45270-3	A51190.D	104.0	96.0	97.0
M45270-4	A51194.D	110.0	93.0	92.0
M45270-5	D41774.D	90.0	98.0	93.0
M45270-6	A51195.D	101.0	96.0	89.0
M45267-4MS	L4119.D	155.0* [a]	109.0	105.0
M45267-4MSD	L4120.D	143.0* [a]	107.0	106.0
M45270-3MS	A51191.D	93.0	93.0	109.0
M45270-3MSD	A51192.D	98.0	101.0	106.0
MSA1705-BS	A51186.D	110.0	97.0	98.0
MSA1705-BSD	A51187.D	95.0	93.0	92.0
MSA1705-MB	A51189.D	95.0	96.0	95.0
MSD2447-BS	D41771.D	100.0	103.0	108.0
MSD2447-MB	D41773.D	84.0	97.0	96.0
MSL150-BS	L4106.D	113.0	102.0	100.0
MSL150-MB	L4107.D	115.0	103.0	99.0

Surrogate Compounds	Recovery Limits
S1 = 1,2-Dichloroethane-D4 (SUR)	76-138%
S2 = Toluene-D8 (SUR)	86-114%
S3 = 4-Bromofluorobenzene (SUR)	76-114%

(a) Outside control limits due to possible matrix interfernce. Confirmed by MS/MSD.

Metals Analysis

QC Data Summaries

Includes the following where applicable:

- Method Blank Summaries
- Matrix Spike and Duplicate Summaries
- Blank Spike and Lab Control Sample Summaries
- Serial Dilution Summaries

BLANK RESULTS SUMMARY
Part 2 - Method Blanks

Login Number: M45270
Account: EXXONSS - Exxon Service Station
Project: CDM:S/S 3-5805 1425 Massachusetts Ave., Boxborough, MA

QC Batch ID: MP6669
Matrix Type: AQUEOUS

Methods: SW846 6010B
Units: ug/l

Prep Date:				02/25/05		02/25/05
Metal	RL	IDL	MB raw	final	MB raw	final
Aluminum	200	14				
Antimony	6.0	1.6				
Arsenic	5.0	2.3				
Barium	200	1.7				
Beryllium	4.0	.18				
Boron	100	1.2				
Cadmium	4.0	.31				
Calcium	5000	4.7				
Chromium	10	.53				
Cobalt	50	.47				
Copper	25	2.8				
Iron	100	14				
Lead	5.0	1.9	-0.020	<5.0	0.20	<5.0
Magnesium	5000	5.3				
Manganese	15	.17				
Molybdenum	100	.92				
Nickel	40	.65				
Potassium	5000	31				
Selenium	10	2.7				
Silver	5.0	.53				
Sodium	5000	110				
Strontium	10	.22				
Thallium	10	2.9				
Tin	100	9.4				
Titanium	50	1.3				
Vanadium	50	2.4				
Zinc	20	1.2				

Associated samples MP6669: M45270-1, M45270-2, M45270-3, M45270-4, M45270-5, M45270-6, M45270-1A, M45270-5A

Results < IDL are shown as zero for calculation purposes
(*) Outside of QC limits
(anr) Analyte not requested

MATRIX SPIKE AND DUPLICATE RESULTS SUMMARY

Login Number: M45270
Account: EXXONSS - Exxon Service Station
Project: CDM:S/S 3-5805 1425 Massachusetts Ave., Boxborough, MA

QC Batch ID: MP6669
Matrix Type: AQUEOUS

Methods: SW846 6010B
Units: ug/l

Prep Date:				02/25/05				02/25/05	
Metal	M45270-5 Original	MS	Spikelot MPIRWS2	% Rec	QC Limits	M45270-5 Original	DUP	RPD	QC Limits
Aluminum									
Antimony									
Arsenic									
Barium									
Beryllium									
Boron									
Cadmium									
Calcium									
Chromium									
Cobalt									
Copper									
Iron									
Lead	0.0	982	1000	98.2	75-125	0.0	0.0	NC	0-20
Magnesium									
Manganese									
Molybdenum									
Nickel									
Potassium									
Selenium									
Silver									
Sodium									
Strontium									
Thallium									
Tin									
Titanium									
Vanadium									
Zinc									

Associated samples MP6669: M45270-1, M45270-2, M45270-3, M45270-4, M45270-5, M45270-6, M45270-1A, M45270-5A

Results < IDL are shown as zero for calculation purposes
(*) Outside of QC limits
(N) Matrix Spike Rec. outside of QC limits
(anr) Analyte not requested

SPIKE BLANK AND LAB CONTROL SAMPLE SUMMARY

Login Number: M45270
Account: EXXONSS - Exxon Service Station
Project: CDM:S/S 3-5805 1425 Massachusetts Ave., Boxborough, MA

QC Batch ID: MP6669
Matrix Type: AQUEOUS

Methods: SW846 6010B
Units: ug/l

Prep Date: 02/25/05 02/25/05

Metal	BSP Result	Spikelot MPIRWS2	% Rec	QC Limits	BSD Result	Spikelot MPIRWS2	% Rec	BSD RPD	QC Limit
Aluminum									
Antimony									
Arsenic									
Barium									
Beryllium									
Boron									
Cadmium									
Calcium									
Chromium									
Cobalt									
Copper									
Iron									
Lead	999	1000	99.9	80-120	1020	1000	102.0	2.1	
Magnesium									
Manganese									
Molybdenum									
Nickel									
Potassium									
Selenium									
Silver									
Sodium									
Strontium									
Thallium									
Tin									
Titanium									
Vanadium									
Zinc									

Associated samples MP6669: M45270-1, M45270-2, M45270-3, M45270-4, M45270-5, M45270-6, M45270-1A, M45270-5A

Results < IDL are shown as zero for calculation purposes
(*) Outside of QC limits
(anr) Analyte not requested

SERIAL DILUTION RESULTS SUMMARY

Login Number: M45270
Account: EXXONSS - Exxon Service Station
Project: CDM:S/S 3-5805 1425 Massachusetts Ave., Boxborough, MA

QC Batch ID: MP6669
Matrix Type: AQUEOUS

Methods: SW846 6010B
Units: ug/l

Prep Date: 02/25/05

Metal	M45270-5 Original	SDL 1:5	RPD	QC Limits
Aluminum				
Antimony				
Arsenic				
Barium				
Beryllium				
Boron				
Cadmium				
Calcium				
Chromium				
Cobalt				
Copper				
Iron				
Lead	0.00	0.00	NC	0-10
Magnesium				
Manganese				
Molybdenum				
Nickel				
Potassium				
Selenium				
Silver				
Sodium				
Strontium				
Thallium				
Tin				
Titanium				
Vanadium				
Zinc				

Associated samples MP6669: M45270-1, M45270-2, M45270-3, M45270-4, M45270-5, M45270-6, M45270-1A, M45270-5A

Results < IDL are shown as zero for calculation purposes
(*) Outside of QC limits
(anr) Analyte not requested

General Chemistry

QC Data Summaries

Includes the following where applicable:

- Method Blank and Blank Spike Summaries
- Duplicate Summaries
- Matrix Spike Summaries

METHOD BLANK AND SPIKE RESULTS SUMMARY
GENERAL CHEMISTRY

Login Number: M45270
Account: EXXONSS - Exxon Service Station
Project: CDM:S/S 3-5805 1425 Massachusetts Ave., Boxborough, MA

Analyte	Batch ID	RL	MB Result	Units	Spike Amount	BSP Result	BSP %Recov	QC Limits
Color, Apparent	GN15936	5	<5	CU				
Petroleum Hydrocarbons	GP5301/GN15958	0.60	<0.60	mg/l	5	4.6	92.0	80-120%
Solids, Settleable	GN15934	0.10	<0.10	ml/l/hr				
Solids, Total Suspended	GN15938	4.0	<4.0	mg/l				
Turbidity	GN15937	0.50	<0.50	NTU				

Associated Samples:
Batch GN15934: M45270-1, M45270-5
Batch GN15936: M45270-1, M45270-5
Batch GN15937: M45270-1, M45270-5
Batch GN15938: M45270-1, M45270-5
Batch GP5301: M45270-1, M45270-5

DUPLICATE RESULTS SUMMARY
GENERAL CHEMISTRY

Login Number: M45270
Account: EXXONSS - Exxon Service Station
Project: CDM:S/S 3-5805 1425 Massachusetts Ave., Boxborough, MA

Analyte	Batch ID	QC Sample	Units	Original Result	DUP Result	RPD	QC Limits
Color, Apparent	GN15936	M45270-5	CU	<5	<5	0.0	0-20%
Petroleum Hydrocarbons	GP5301/GN15958	M45270-1	mg/l	<0.61	<0.61	0.0	0-20%
Solids, Settleable	GN15934	M45270-1	ml/l/hr	<0.10	<0.20	0.0	0-20%
Solids, Total Suspended	GN15938	M45263-1	mg/l	32.0	32.0	0.0	0-20%
Turbidity	GN15937	M45270-5	NTU	<0.50	<0.50	0.0	0-20%

Associated Samples:
Batch GN15934: M45270-1, M45270-5
Batch GN15936: M45270-1, M45270-5
Batch GN15937: M45270-1, M45270-5
Batch GN15938: M45270-1, M45270-5
Batch GP5301: M45270-1, M45270-5

MATRIX SPIKE RESULTS SUMMARY
GENERAL CHEMISTRY

Login Number: M45270
Account: EXXONSS - Exxon Service Station
Project: CDM:S/S 3-5805 1425 Massachusetts Ave., Boxborough, MA

Analyte	Batch ID	QC Sample	Units	Original Result	Spike Amount	MS Result	%Rec	QC Limits
Petroleum Hydrocarbons	GP5301/GN15958	M45270-5	mg/l	<0.61	5.1	4.8	94.1	75-125%

Associated Samples:
Batch GP5301: M45270-1, M45270-5

Misc. Forms

Custody Documents and Other Forms

Includes the following where applicable:

- Sample Tracking Chronicle

Internal Sample Tracking Chronicle

Exxon Service Station

Job No: M45270

CDM:S/S 3-5805 1425 Massachusetts Ave., Boxborough, MA
Project No: PO#4506003635 WBS#08

Sample Number	Method	Analyzed	By	Prepped	By	Test Codes
M45270-1 Collected: 23-FEB-05 14:20 By: RMB Received: 23-FEB-05 By: RS INF						
M45270-1	EPA 110.2	23-FEB-05 16:40	MA			COL
M45270-1	EPA 180.1	23-FEB-05 16:55	MA			TURB
M45270-1	EPA 160.5	23-FEB-05 17:10	MA			SS
M45270-1	EPA 160.2	24-FEB-05	BF			TSS
M45270-1	EPA 418.1	25-FEB-05	BF	25-FEB-05	BF	PHC
M45270-1	SW846 6010B	25-FEB-05 15:15	LMN	25-FEB-05	OP	PB
M45270-1	EPA 624	01-MAR-05 00:04	AMY			V624BTXM
M45270-2 Collected: 23-FEB-05 15:00 By: RMB Received: 23-FEB-05 By: RS OWS EFF						
M45270-2	SW846 6010B	25-FEB-05 15:44	LMN	25-FEB-05	OP	PB
M45270-2	EPA 624	02-MAR-05 20:23	AT			V624BTXM
M45270-3 Collected: 23-FEB-05 15:10 By: RMB Received: 23-FEB-05 By: RS AS EFF						
M45270-3	SW846 6010B	25-FEB-05 15:49	LMN	25-FEB-05	OP	PB
M45270-3	EPA 624	02-MAR-05 16:29	AT			V624BTXM
M45270-4 Collected: 23-FEB-05 15:20 By: RMB Received: 23-FEB-05 By: RS GAC 1 EFF						
M45270-4	SW846 6010B	25-FEB-05 15:55	LMN	25-FEB-05	OP	PB
M45270-4	EPA 624	02-MAR-05 19:05	AT			V624BTXM
M45270-5 Collected: 23-FEB-05 14:45 By: RMB Received: 23-FEB-05 By: RS EFF						
M45270-5	EPA 110.2	23-FEB-05 16:40	MA			COL
M45270-5	EPA 180.1	23-FEB-05 16:55	MA			TURB
M45270-5	EPA 160.5	23-FEB-05 17:40	MA			SS
M45270-5	EPA 160.2	24-FEB-05	BF			TSS
M45270-5	EPA 418.1	25-FEB-05	BF	25-FEB-05	BF	PHC
M45270-5	EPA 624	25-FEB-05 15:00	AT			V624BTXM
M45270-5	SW846 6010B	25-FEB-05 15:04	LMN	25-FEB-05	OP	PB

Internal Sample Tracking Chronicle

Exxon Service Station

Job No: M45270

CDM:S/S 3-5805 1425 Massachusetts Ave., Boxborough, MA
Project No: PO#4506003635 WBS#08

Sample Number	Method	Analyzed	By	Prepped	By	Test Codes
M45270-6 Collected: 23-FEB-05 15:30 By: RMB Received: 23-FEB-05 By: RS GAC 2 EFF						
M45270-6	SW846 6010B	25-FEB-05 16:01	LMN	25-FEB-05	OP	PB
M45270-6	EPA 624	02-MAR-05 19:45	AT			V624BTXM
M45270-1A Collected: 23-FEB-05 14:20 By: RMB Received: 23-FEB-05 By: RS INF						
M45270-1A	SW846 6010B	25-FEB-05 15:21	LMN	25-FEB-05	OP	PB
M45270-5A Collected: 23-FEB-05 14:45 By: RMB Received: 23-FEB-05 By: RS EFF						
M45270-5A	SW846 6010B	25-FEB-05 15:27	LMN	25-FEB-05	OP	PB

ACCUTEST Laboratories

CHAIN OF CUSTODY

495 Tech Center West, Bldg. 1
Marlboro, MA 01752
508-481-6200 FAX: 508-481-6200

Accutest Job #: M45270

Client Information | **Facility Information**

EXXONMOBIL CORPORATION - Regional Laboratory Program Northeast

Consultants Company Name: CDM	Project Name: Xom Boxboro -
Address: 50 Hampshire St.	Street: 1425 Mass. Ave
City: Cambridge State: MA Zip: 02140	City: Boxboro State: MA
Project Contact: Jon Welch	ExxonMobil Contact: Eric Errico
Sampler's Name: Ryan Bouldin	ExxonMobil Contact Phone #:
Phone #: 617-452-6000 Ext. Fax #:	Location ID#: 3-5805 WBS#:
AFE #:	PO# Line#:

Analytical Information: BTEX 8260 ☐ 624 ☒ 8021 ☐ 524 ☐ MTBE ☒ TBA ☐ Naphthalene ☐ Oxygenates ☐; VOC AQUEOUS 8260 ☐ 624 ☐ 524 ☐ STD ☐ TCL ☐ PPL ☐ MTBE ☐ TBA ☐ Oxygenates ☐; VOC SOIL 8260 ☐ STD ☐ TCL ☐ PPL ☐ MTBE ☐ TBA ☐ Oxygenates ☐ 5035/LOW ☐ 5035MED ☐; VPH RANGES ☐ TARGETS ☐; EPH RANGES ☐ TARGET (PAH) ☐ DIESEL (PAH) ☐; TPH-CTDEP ☐ TPH418.1 ☒; TPH-MAINE GRO ☐ DRO ☐; TPH-8015 GRO ☐ TPH-8015 DRO ☐; METALS TOTAL ☐ DISSOLVED ☐ HM8 ☐ HM5 ☐; METALS TCLP ☐ SPLP ☐ HM8 ☐ HM5 ☐; TSS; Total Settleable Solids; Dissolved Lead (Lab Filter); Total Lead; Color / Turbidity

Accutest Sample #	Field ID / Point of Collection	Date	Time	Sampled by	Matrix	# of bottles	HCL	NaOH	HNO3	H2SO4	MEOH	Encore	Other	None	BTEX 8260	VOC AQUEOUS 8260	TPH-CTDEP	TSS	Total Settleable Solids	Dissolved Lead (Lab Filter)	Total Lead	Color / Turbidity
	Inf	2-23-05	1420	RMB	GW	2	✓								✓							
-1,1A	Inf					2				✓							✓					
	Inf					1								✓				✓				✓
	Inf					1								✓					✓			
	Inf					1								✓						✓		
	Inf					1			✓												✓	
	OWS Eff		1500			2	✓								✓							
-2	OWS Eff **		1500			1								✓							✓	
	AS Eff		1510			2	✓								✓							
-3	AS Eff **		1510			1								✓							✓	
-4	GAC1 Eff		1520			2	✓								✓							

SAMPLES RECEIVED DIRECTLY FROM FIELD SAMPLING

Turnaround Time (Business days)

- ☒ Std. 10 Business Days
- ☐ 8 Day RUSH
- ☒ 5 Day RUSH * [redacted]
- ☐ 3 Day *EMERGENCY*
- ☐ 2 Day *EMERGENCY*
- ☐ 1 Day EMERGENCY

Approved By:/Date

Emergency T/A is for FAX or Lablink Data

Data Deliverable Information

- ☐ Commercial "A"
- ☐ Commercial "B"
- ☐ Full Deliverables
- ☐ Other
- ☐ FULL CLP
- ☐ State Forms
- ☐ Disk Deliverable Format

** JAR FOR TOT PB. REQ. PRES. AT LAB (HNO3) 2/23/05

Site Specific: QC Yes ☐ No ☐ If yes, indicate QC sample in Comments and submit triplicate volume. LOC. 3J3, 4E, 5A, 10F

Comments / Remarks

MCP Presumptive Certainty Required
-GW-1 Std's Apply
* 5 day on all Inf Samples
L All other samples unless noted have 10 day TAT

Sample Custody must be documented below each time samples change possession, including courier delivery.

Relinquished by Sampler	Date Time	Received by	Relinquished by	Date Time	Received by
1 Ryan Bouldin	2-23-05 1600	1	2		2
3		3	4		4
5		5			

Seal # Preserved where applicable ☐ On Ice ☐ Temp. °C 16

ACCUTEST Laboratories

495 Tech Center West, Bldg. 1
Marlboro, MA 01752
508-481-6200 FAX: 508-481-6200

Accutest Job #: M45270

Client Information | **Facility Information**

EXXONMOBIL CORPORATION - Regional Laboratory Program Northeast

Consultants Company Name: CDM	Project Name: Xom Boxboro
Address: 50 Hampshire St.	Street: 1425 Klass. Ave
City: Cambridge State: MA Zip: 02155	City: Boxboro State: MA
Project Contact: Jon Welch	ExxonMobil Contact: Eric Errico
Sampler's Name: Ryan Bouldin	ExxonMobil Contact Phone #:
Phone #: 617-452-6000 Ext. Fax #:	Location ID#: 3-5805 WBS#:
AFE #:	PO# Line#

Analytical Information

Accutest Sample #	Field ID / Point of Collection	Collection Date	Collection Time	Sampled by	Matrix	# of bottles	Preservation HCL	NaOH	HNO3	H2SO4	MEOH	Encore	Other	None	BTEX 8260 ☐ 624 ☐ 8021 ☐ 524 ☐ MTBE ☐ TBA ☐ Naphthalene ☐ Oxygenates ☐	VOC AQUEOUS 8260 ☐ 624 ☐ 524 ☐ STD ☐ TCL ☐ PPL ☐ MTBE ☐ TBA ☐ Oxygenates ☐	VOC SOIL 8260 ☐ STD ☐ TCL ☐ PPL ☐ MTBE ☐ TBA ☐ Oxygenates ☐ 5035/LOW ☐ 5035MED ☐	VPH RANGES ☐ TARGETS ☐	EPH RANGES ☐ TARGET (PAH) ☐ DIESEL (PAH) ☐	TPH-CTDEP ☐ TPH418.1 ☐	TPH-MAINE GRO ☐ DRO ☐	TPH-8015 GRO ☐ TPH-8015 DRO ☐	METALS TOTAL ☐ DISSOLVED ☐ HM8 ☐ HM5 ☐	METALS TCLP ☐ SPLP ☐ HM8 ☐ HM5 ☐	TSS	Total Settleable Solids	Dissolved Lead (Lab Filter)	Total Lead	Color / Turbidity
	Eff	2-23-05	1445	RmB	GW	2	✓								✓														
4	Eff					2				✓										✓									
-5,SA	Eff					1								✓											✓				✓
	Eff					1								✓												✓			
	Eff					1								✓													✓		
	Eff					1			✓																			✓	
-4	GAC1 Eff **		1520			1																						✓	
	GAC2 Eff		1530			2									✓														
-6	GAC2 Eff **		1530			1																						✓	

SAMPLES RECEIVED DIRECTLY FROM FIELD SAMPLING

Turnaround Time (Business days)

- ☒ Std. 10 Business Days
- ☐ 8 Day RUSH
- ☒ 5 Day RUSH*
- ☐ 3 Day *EMERGENCY*
- ☐ 2 Day *EMERGENCY*
- ☐ 1 Day EMERGENCY

Approved By:/Date

Emergency T/A is for FAX or Lablink Data

Data Deliverable Information

- ☐ Commercial "A"
- ☐ Commercial "B"
- ☐ Full Deliverables
- ☐ Other
- ☐ FULL CLP
- ☐ State Forms
- ☐ Disk Deliverable Format _____

Site Specific: QC Yes ☐ No ☐ If yes, indicate QC sample in Comments and submit triplicate volume.

Comments / Remarks

MCP Presumptive Certainty Required
GW-1 Stds. Apply
*5day on all Eff samples
L10 for GAC1, GAC2

Sample Custody must be documented below each time samples change possession, including courier delivery.

Relinquished by Sampler:	Date Time:	Received by:	Relinquished by:	Date Time:	Received by:
1 Ryan M Bouldin	2-23-05, 1600	1	2		2
Relinquished by: 3	Date Time:	Received by: 3	Relinquished by: 4	Date Time:	Received by: 4
Relinquished by: 5	Date Time:	Received by: 5	Seal #	Preserved where applicable ☐	On Ice ☒ Temp. 10.8 °C

New England ACCUTEST Laboratories

03/28/05

Technical Report for

Exxon Service Station

CDM:S/S 3-5805 1425 Massachusetts Ave., Boxborough, MA

PO#4506003635 WBS#08

Accutest Job Number: M45707

Sampling Date: 03/15/05

Report to:

Camp Dresser & McKee
50 Hampshire Avenue
Cambridge, MA 02139

ATTN: Jon Welch

Total number of pages in report: 29

ACCREDITED IN ACCORDANCE WITH nelac

Test results contained within this data package meet the requirements of the National Environmental Laboratory Accreditation Conference and/or state specific certification programs as applicable.

Reza Tand
Lab Director

Certifications: MA (M-MA136) CT (PH-0109) NH (250204) RI (00071) ME (MA136) FL (E87579) NY (23346) NJ (MA926) NAVY USACE

This report shall not be reproduced, except in its entirety, without the written approval of Accutest Laboratories.

ACCUTEST Laboratories

SAMPLE DELIVERY GROUP CASE NARRATIVE

Client: Exxon Service Station **Job No:** M45707

Site: CDM:S/S 3-5805 1425 Massachusetts Ave., Boxborough, MA **Report Date** 3/23/2005 2:51:46 PM

2 Sample were collected on 03/15/2005 and were received at Accutest on 03/16/2005 properly preserved, at 0.4 Deg. C and intact. These Samples received an Accutest job number of M45707. A listing of the Laboratory Sample ID, Client Sample ID and dates of collection are presented in the Results Summary Section of this report.

Except as noted below, all method specified calibrations and quality control performance criteria were met for this job. For more information, please refer to QC summary pages.

Volatiles by GCMS By Method EPA 624

Matrix: AQ **Batch ID:** MSD2459

- All samples were analyzed within the recommended method holding time.
- All method blanks for this batch meet method specific criteria.
- Only BTX and MTBE requested.

Metals By Method SW846 6010B

Matrix: AQ **Batch ID:** MP6749

- All samples were digested within the recommended method holding time.
- All samples were analyzed within the recommended method holding time.
- All method blanks for this batch meet method specific criteria.
- Sample(s) M45707-2DUP, M45707-2MS, M45707-2SDL were used as the QC samples for metals.

Wet Chemistry By Method EPA 110.2

Matrix: AQ **Batch ID:** GN16112

- All samples were analyzed within the recommended method holding time.
- All method blanks for this batch meet method specific criteria.
- Sample(s) M45707-2DUP were used as the QC samples for Color, Apparent.
- M45707-2 for Color, Apparent: pH at the time of analysis, 9.84.
- M45707-1 for Color, Apparent: pH at the time of analysis, 6.33.

Wet Chemistry By Method EPA 160.2

Matrix: AQ **Batch ID:** GN16129

- All samples were analyzed within the recommended method holding time.
- All method blanks for this batch meet method specific criteria.
- Sample(s) M45707-2DUP were used as the QC samples for Solids, Total Suspended.

Wet Chemistry By Method EPA 160.5

Matrix: AQ **Batch ID:** GN16114

- All samples were analyzed within the recommended method holding time.
- All method blanks for this batch meet method specific criteria.
- Sample(s) M45707-2DUP were used as the QC samples for Solids, Settleable.

Wet Chemistry By Method EPA 180.1

Matrix: AQ	Batch ID: GN16113

- All samples were analyzed within the recommended method holding time.
- All method blanks for this batch meet method specific criteria.
- Sample(s) M45707-2DUP were used as the QC samples for Turbidity.

Wet Chemistry By Method EPA 418.1

Matrix: AQ	Batch ID: GP5355

- All samples were distilled within the recommended method holding time.
- All samples were analyzed within the recommended method holding time.
- All method blanks for this batch meet method specific criteria.
- Sample(s) M45705-6MS, M45705-7DUP were used as the QC samples for Petroleum Hydrocarbons.

The Accutest Laboratories of New England certifies that all analysis were performed within method specification. It is further recommended that this report to be used in its entirety.The Accutest Laboratories of NE, Laboratory Director or assignee as verified by the signature on the cover page has authorized the release of this report(M45707).

Title: **MADEP MCP Response Action Analytical Report Certification Form**

MADEP MCP Analytical Method Report Certification Form

Laboratory Name:	Accutest Laboratories of New England	Project #:	M45707
Project Location:	CDM:S/S 3-5805 1425 Massachusetts Ave., Boxborough, MA	MADEP RTN [1]	None

This form provides certifications for the following data set:
M45707-1,M45707-2

Test Method: EPA 624, 110.2, 160.2, 160.5, 180.1, 418.1, and below

Sample Matrices:	Groundwater	Soil/Sediment ( )	Drinking Water ( )	Other: X ( )		( )
MCP SW-846 Methods Used	8260B ( )	8151A ( )	8330 ( )	6010B	(X)	7470A/1A ( )
	8270C ( )	8081A ( )	VPH ( )	6020	( )	9014M [2] ( )
As specified in MADEP Compendium of Analytical Methods (Check all that apply)	8082 ( )	8021B ( )	EPH ( )	7000 S [3]	( )	7196A ( )

1. List Release Tracking Number (RTN) if known
2. M - SW-846 Method 9014 or MADEP Physiologically Available Cyanide (PAC) Method
3. S - SW-846 Methods 7000 Series. List individual method and analyte

An affirmative response to questions A, B, C, and D is required for "Presumptive Certainty status

A	Were all samples received by the laboratory in a condition consistent with that described on the Chain-of-Custody documentation for the data set?	☑	Yes	☐ No [1]
B	Were all QA/QC procedures required for the specified analytical method(s) included in this report followed, including the requirement to note and discuss in a narrative QC data that did not meet appropriate performance standards or guidelines?	☑	Yes	☐ No [1]
C	Does the data included in this report meet all the analytical requirements for "Presumptive Certainty", as described in Section 2.0 (a), (b), (c) and (d) of the MADEP document CAM VII A, "Quality Assurance and Quality Control Guidelines for the Acquisition and Reporting of Analytical Data"?	☑	Yes	☐ No [1]
D	**VPH and EPH methods only:** Was the VPH or EPH method run without significant modifications, as specified in Section 11.3?	☑	Yes	☐ No [1]

A response to questions E and F below is required for "Presumptive Certainty" status

E	Were all QC performance standards and recommendations for the specified methods achieved?	☑ Refer to Narrative	Yes	☐ No [1]
F	Were results for all analyte-list compounds/elements for the specified method(s) reported?	☐ Refer to Narrative	Yes	☑ No [1]

[1] ***All Negative responses must be addressed in an attached Environmental Laboratory case narrative.***

I the undersigned, attest under the pains and penalties of perjury that, based upon my personal inquiry of those responsible for obtaining the information, the material contained in this analytical report is, to the best of my knowledge and belief, accurate and complete.

Signature:		**Position:**	**Laboratory Director**
Printed Name:	**Reza Tand**	**Date:**	**03/24/2005**

Sample Summary

Exxon Service Station

CDM:S/S 3-5805 1425 Massachusetts Ave., Boxborough, MA
Project No: PO#4506003635 WBS#08

Job No: M45707

Sample Number	Collected Date	Time By	Received	Matrix Code	Type	Client Sample ID
M45707-1	03/15/05	00:00 RMB	03/16/05	AQ	Influent	INF-GW-3/15/05
M45707-2	03/15/05	00:00 RMB	03/16/05	AQ	Effluent	EFF-GW-3/15/05

Accutest Laboratories

Report of Analysis

Client Sample ID:	INF-GW-3/15/05		
Lab Sample ID:	M45707-1	**Date Sampled:**	03/15/05
Matrix:	AQ - Influent	**Date Received:**	03/16/05
Method:	EPA 624	**Percent Solids:**	n/a
Project:	CDM:S/S 3-5805 1425 Massachusetts Ave., Boxborough, MA		

	File ID	DF	Analyzed	By	Prep Date	Prep Batch	Analytical Batch
Run #1	D42102.D	1	03/18/05	AT	n/a	n/a	MSD2459
Run #2							

	Purge Volume
Run #1	5.0 ml
Run #2	

Purgeable Aromatics, MTBE

CAS No.	Compound	Result	RL	Units	Q
71-43-2	Benzene	ND	0.50	ug/l	
108-88-3	Toluene	ND	1.0	ug/l	
100-41-4	Ethylbenzene	ND	1.0	ug/l	
1330-20-7	Xylenes (total)	ND	1.0	ug/l	
1634-04-4	Methyl Tert Butyl Ether	27.0	1.0	ug/l	

CAS No.	Surrogate Recoveries	Run# 1	Run# 2	Limits
17060-07-0	1,2-Dichloroethane-D4 (SUR)	96%		76-138%
2037-26-5	Toluene-D8 (SUR)	97%		86-114%
460-00-4	4-Bromofluorobenzene (SUR)	89%		76-114%

ND = Not detected
RL = Reporting Limit
E = Indicates value exceeds calibration range

J = Indicates an estimated value
B = Indicates analyte found in associated method blank
N = Indicates presumptive evidence of a compound

Accutest Laboratories

Report of Analysis

Client Sample ID:	INF-GW-3/15/05		
Lab Sample ID:	M45707-1	**Date Sampled:**	03/15/05
Matrix:	AQ - Influent	**Date Received:**	03/16/05
		Percent Solids:	n/a
Project:	CDM:S/S 3-5805 1425 Massachusetts Ave., Boxborough, MA		

Metals Analysis

Analyte	Result	RL	Units	DF	Prep	Analyzed	By	Method	Prep Method
Lead	<5.0	5.0	ug/l	1	03/17/05	03/18/05	LMN	SW846 6010B [1]	SW846 3010A [2]

(1) Instrument QC Batch: MA5577
(2) Prep QC Batch: MP6749

RL = Reporting Limit

Accutest Laboratories

Report of Analysis

Client Sample ID:	INF-GW-3/15/05		
Lab Sample ID:	M45707-1	**Date Sampled:**	03/15/05
Matrix:	AQ - Influent	**Date Received:**	03/16/05
		Percent Solids:	n/a
Project:	CDM:S/S 3-5805 1425 Massachusetts Ave., Boxborough, MA		

General Chemistry

Analyte	Result	RL	Units	DF	Analyzed	By	Method
Color, Apparent [a]	15	5	CU	1	03/16/05 17:45	MA	EPA 110.2
Petroleum Hydrocarbons	<0.61	0.61	mg/l	1	03/18/05	BF	EPA 418.1
Solids, Settleable	<0.10	0.10	ml/l/hr	1	03/16/05 18:10	MA	EPA 160.5
Solids, Total Suspended	13.0	4.0	mg/l	1	03/18/05	BF	EPA 160.2
Turbidity	5.3	0.50	NTU	1	03/16/05 17:30	MA	EPA 180.1

(a) pH at the time of analysis, 6.33.

RL = Reporting Limit

GC/MS Volatiles

QC Data Summaries

Includes the following where applicable:

- Method Blank Summaries
- Blank Spike Summaries
- Matrix Spike and Duplicate Summaries
- Surrogate Recovery Summaries

Method Blank Summary

Job Number: M45707
Account: EXXONSS Exxon Service Station
Project: CDM:S/S 3-5805 1425 Massachusetts Ave., Boxborough, MA

Sample	File ID	DF	Analyzed	By	Prep Date	Prep Batch	Analytical Batch
MSD2459-MB	D42100.D	1	03/18/05	AT	n/a	n/a	MSD2459

The QC reported here applies to the following samples: **Method:** EPA 624

M45707-1, M45707-2

CAS No.	Compound	Result	RL	Units	Q
71-43-2	Benzene	ND	0.50	ug/l	
100-41-4	Ethylbenzene	ND	1.0	ug/l	
1634-04-4	Methyl Tert Butyl Ether	ND	1.0	ug/l	
108-88-3	Toluene	ND	1.0	ug/l	
1330-20-7	Xylenes (total)	ND	1.0	ug/l	

CAS No.	Surrogate Recoveries		Limits
17060-07-0	1,2-Dichloroethane-D4 (SUR)	96%	76-138%
2037-26-5	Toluene-D8 (SUR)	98%	86-114%
460-00-4	4-Bromofluorobenzene (SUR)	93%	76-114%

Method Blank Summary

Job Number: M45707
Account: EXXONSS Exxon Service Station
Project: CDM:S/S 3-5805 1425 Massachusetts Ave., Boxborough, MA

Sample	File ID	DF	Analyzed	By	Prep Date	Prep Batch	Analytical Batch
MSD2459-MB1	D42126.D	1	03/22/05	AT	n/a	n/a	MSD2459

The QC reported here applies to the following samples: **Method:** EPA 624

M45708-2MS, M45708-2MSD

CAS No.	Compound	Result	RL	Units	Q
71-43-2	Benzene	ND	0.50	ug/l	
100-41-4	Ethylbenzene	ND	1.0	ug/l	
1634-04-4	Methyl Tert Butyl Ether	ND	1.0	ug/l	
108-88-3	Toluene	ND	1.0	ug/l	
1330-20-7	Xylenes (total)	ND	1.0	ug/l	

CAS No.	Surrogate Recoveries		Limits
17060-07-0	1,2-Dichloroethane-D4 (SUR)	97%	76-138%
2037-26-5	Toluene-D8 (SUR)	102%	86-114%
460-00-4	4-Bromofluorobenzene (SUR)	86%	76-114%

Blank Spike Summary

Job Number: M45707
Account: EXXONSS Exxon Service Station
Project: CDM:S/S 3-5805 1425 Massachusetts Ave., Boxborough, MA

Sample	File ID	DF	Analyzed	By	Prep Date	Prep Batch	Analytical Batch
MSD2459-BS	D42098.D	1	03/18/05	AT	n/a	n/a	MSD2459

The QC reported here applies to the following samples: **Method:** EPA 624

M45707-1, M45707-2

CAS No.	Compound	Spike ug/l	BSP ug/l	BSP %	Limits
71-43-2	Benzene	20	22.3	112	37-151
100-41-4	Ethylbenzene	20	21.6	108	37-162
1634-04-4	Methyl Tert Butyl Ether	20	18.3	92	58-150
108-88-3	Toluene	20	21.6	108	47-150
1330-20-7	Xylenes (total)	60	60.1	100	68-136

CAS No.	Surrogate Recoveries	BSP	Limits
17060-07-0	1,2-Dichloroethane-D4 (SUR)	94%	76-138%
2037-26-5	Toluene-D8 (SUR)	99%	86-114%
460-00-4	4-Bromofluorobenzene (SUR)	88%	76-114%

Matrix Spike/Matrix Spike Duplicate Summary

Job Number: M45707
Account: EXXONSS Exxon Service Station
Project: CDM:S/S 3-5805 1425 Massachusetts Ave., Boxborough, MA

Sample	File ID	DF	Analyzed	By	Prep Date	Prep Batch	Analytical Batch
M45708-2MS	D42130.D	2.5	03/22/05	AT	n/a	n/a	MSD2459
M45708-2MSD	D42131.D	2.5	03/22/05	AT	n/a	n/a	MSD2459
M45708-2	D42129.D	1	03/22/05	AT	n/a	n/a	MSD2459

The QC reported here applies to the following samples: **Method:** EPA 624

M45707-1, M45707-2

CAS No.	Compound	M45708-2 ug/l	Q	Spike ug/l	MS ug/l	MS %	MSD ug/l	MSD %	RPD	Limits Rec/RPD
71-43-2	Benzene	ND		50	54.1	108	56.3	113	4	37-151/30
100-41-4	Ethylbenzene	ND		50	55.1	110	56.9	114	3	37-162/30
1634-04-4	Methyl Tert Butyl Ether	3.2		50	52.2	98	52.6	99	1	46-150/24
108-88-3	Toluene	ND		50	53.5	107	56.6	113	6	47-150/30
1330-20-7	Xylenes (total)	ND		150	163	109	166	111	2	66-138/28

CAS No.	Surrogate Recoveries	MS	MSD	M45708-2	Limits
17060-07-0	1,2-Dichloroethane-D4 (SUR)	96%	95%	94%	76-138%
2037-26-5	Toluene-D8 (SUR)	100%	102%	100%	86-114%
460-00-4	4-Bromofluorobenzene (SUR)	91%	93%	87%	76-114%

Volatile Surrogate Recovery Summary

Job Number: M45707
Account: EXXONSS Exxon Service Station
Project: CDM:S/S 3-5805 1425 Massachusetts Ave., Boxborough, MA

Method: EPA 624 **Matrix:** AQ

Samples and QC shown here apply to the above method

Lab Sample ID	Lab File ID	S1	S2	S3
M45707-1	D42102.D	96.0	97.0	89.0
M45707-2	D42101.D	95.0	98.0	92.0
M45708-2MS	D42130.D	96.0	100.0	91.0
M45708-2MSD	D42131.D	95.0	102.0	93.0
MSD2459-BS	D42098.D	94.0	99.0	88.0
MSD2459-MB	D42100.D	96.0	98.0	93.0
MSD2459-MB1	D42126.D	97.0	102.0	86.0

Surrogate Compounds	Recovery Limits
S1 = 1,2-Dichloroethane-D4 (SUR)	76-138%
S2 = Toluene-D8 (SUR)	86-114%
S3 = 4-Bromofluorobenzene (SUR)	76-114%

Metals Analysis

QC Data Summaries

Includes the following where applicable:

- Method Blank Summaries
- Matrix Spike and Duplicate Summaries
- Blank Spike and Lab Control Sample Summaries
- Serial Dilution Summaries

BLANK RESULTS SUMMARY
Part 2 - Method Blanks

Login Number: M45707
Account: EXXONSS - Exxon Service Station
Project: CDM:S/S 3-5805 1425 Massachusetts Ave., Boxborough, MA

QC Batch ID: MP6749
Matrix Type: AQUEOUS

Methods: SW846 6010B
Units: ug/l

Prep Date: 03/17/05

Metal	RL	IDL	MB raw	final
Aluminum	200	22		
Antimony	6.0	2.4		
Arsenic	5.0	3.3		
Barium	200	.64		
Beryllium	4.0	.18		
Boron	100	1.8		
Cadmium	4.0	.22		
Calcium	5000	5.9		
Chromium	10	.72		
Cobalt	50	.69		
Copper	25	1.2		
Iron	100	20		
Lead	5.0	1.2	0.0	<5.0
Magnesium	5000	7.7		
Manganese	15	.36		
Molybdenum	100	.48		
Nickel	40	.49		
Potassium	5000	19		
Selenium	10	1.7		
Silicon	100	11		
Silver	5.0	.12		
Sodium	5000	94		
Strontium	10	.12		
Thallium	10	3.1		
Tin	100	1.7		
Titanium	50	1.6		
Tungsten	100			
Vanadium	50	1.3		
Zinc	20	3.8		

Associated samples MP6749: M45707-1, M45707-2

Results < IDL are shown as zero for calculation purposes
(*) Outside of QC limits
(anr) Analyte not requested

MATRIX SPIKE AND DUPLICATE RESULTS SUMMARY

Login Number: M45707
Account: EXXONSS - Exxon Service Station
Project: CDM:S/S 3-5805 1425 Massachusetts Ave., Boxborough, MA

QC Batch ID: MP6749
Matrix Type: AQUEOUS

Methods: SW846 6010B
Units: ug/l

Prep Date:				03/17/05				03/17/05	
Metal	M45707-2 Original	MS	Spikelot MPIRWS2	% Rec	QC Limits	M45707-2 Original	DUP	RPD	QC Limits
Aluminum									
Antimony									
Arsenic									
Barium									
Beryllium									
Boron									
Cadmium									
Calcium									
Chromium									
Cobalt									
Copper									
Iron									
Lead	0.0	1040	1000	104.0	75-125	0.0	0.0	NC	0-20
Magnesium									
Manganese									
Molybdenum									
Nickel									
Potassium									
Selenium									
Silicon									
Silver									
Sodium									
Strontium									
Thallium									
Tin									
Titanium									
Tungsten									
Vanadium									
Zinc									

Associated samples MP6749: M45707-1, M45707-2

Results < IDL are shown as zero for calculation purposes
(*) Outside of QC limits
(N) Matrix Spike Rec. outside of QC limits
(anr) Analyte not requested

SPIKE BLANK AND LAB CONTROL SAMPLE SUMMARY

Login Number: M45707
Account: EXXONSS - Exxon Service Station
Project: CDM:S/S 3-5805 1425 Massachusetts Ave., Boxborough, MA

QC Batch ID: MP6749
Matrix Type: AQUEOUS

Methods: SW846 6010B
Units: ug/l

Prep Date:			03/17/05					03/17/05	
Metal	BSP Result	Spikelot MPIRWS2	% Rec	QC Limits	BSD Result	Spikelot MPIRWS2	% Rec	BSD RPD	QC Limit
Aluminum									
Antimony									
Arsenic									
Barium									
Beryllium									
Boron									
Cadmium									
Calcium									
Chromium									
Cobalt									
Copper									
Iron									
Lead	1010	1000	101.0	80-120	1040	1000	104.0	2.9	
Magnesium									
Manganese									
Molybdenum									
Nickel									
Potassium									
Selenium									
Silicon									
Silver									
Sodium									
Strontium									
Thallium									
Tin									
Titanium									
Tungsten									
Vanadium									
Zinc									

Associated samples MP6749: M45707-1, M45707-2

Results < IDL are shown as zero for calculation purposes
(*) Outside of QC limits
(anr) Analyte not requested

SERIAL DILUTION RESULTS SUMMARY

Login Number: M45707
Account: EXXONSS - Exxon Service Station
Project: CDM:S/S 3-5805 1425 Massachusetts Ave., Boxborough, MA

QC Batch ID: MP6749
Matrix Type: AQUEOUS

Methods: SW846 6010B
Units: ug/l

Prep Date: 03/17/05

Metal	M45707-2 Original	SDL 1:5	RPD	QC Limits
Aluminum				
Antimony				
Arsenic				
Barium				
Beryllium				
Boron				
Cadmium				
Calcium				
Chromium				
Cobalt				
Copper				
Iron				
Lead	0.00	0.00	NC	0-10
Magnesium				
Manganese				
Molybdenum				
Nickel				
Potassium				
Selenium				
Silicon				
Silver				
Sodium				
Strontium				
Thallium				
Tin				
Titanium				
Tungsten				
Vanadium				
Zinc				

Associated samples MP6749: M45707-1, M45707-2

Results < IDL are shown as zero for calculation purposes
(*) Outside of QC limits
(anr) Analyte not requested

General Chemistry

QC Data Summaries

Includes the following where applicable:

- Method Blank and Blank Spike Summaries
- Duplicate Summaries
- Matrix Spike Summaries

METHOD BLANK AND SPIKE RESULTS SUMMARY
GENERAL CHEMISTRY

Login Number: M45707
Account: EXXONSS - Exxon Service Station
Project: CDM:S/S 3-5805 1425 Massachusetts Ave., Boxborough, MA

Analyte	Batch ID	RL	MB Result	Units	Spike Amount	BSP Result	BSP %Recov	QC Limits
Color, Apparent	GN16112	5	<5	CU				
Petroleum Hydrocarbons	GP5355/GN16139	0.60	<0.60	mg/l	5	4.8	96.0	80-120%
Solids, Settleable	GN16114	0.10	<0.10	ml/l/hr				
Solids, Total Suspended	GN16129	4.0	<4.0	mg/l				
Turbidity	GN16113	0.50	<0.50	NTU				

Associated Samples:
Batch GN16112: M45707-1, M45707-2
Batch GN16113: M45707-1, M45707-2
Batch GN16114: M45707-1, M45707-2
Batch GN16129: M45707-1, M45707-2
Batch GP5355: M45707-1, M45707-2

DUPLICATE RESULTS SUMMARY
GENERAL CHEMISTRY

Login Number: M45707
Account: EXXONSS - Exxon Service Station
Project: CDM:S/S 3-5805 1425 Massachusetts Ave., Boxborough, MA

Analyte	Batch ID	QC Sample	Units	Original Result	DUP Result	RPD	QC Limits
Color, Apparent	GN16112	M45707-2	CU	<5	<5	0.0	0-20%
Petroleum Hydrocarbons	GP5355/GN16139	M45705-7	mg/l	<0.61	<0.61	0.0	0-20%
Solids, Settleable	GN16114	M45707-2	ml/l/hr	<0.10	<0.10	0.0	0-20%
Solids, Total Suspended	GN16129	M45707-2	mg/l	<4.0	<4.0	0.0	0-20%
Turbidity	GN16113	M45707-2	NTU	<0.50	<0.50	0.0	0-20%

Associated Samples:
Batch GN16112: M45707-1, M45707-2
Batch GN16113: M45707-1, M45707-2
Batch GN16114: M45707-1, M45707-2
Batch GN16129: M45707-1, M45707-2
Batch GP5355: M45707-1, M45707-2

MATRIX SPIKE RESULTS SUMMARY
GENERAL CHEMISTRY

Login Number: M45707
Account: EXXONSS - Exxon Service Station
Project: CDM:S/S 3-5805 1425 Massachusetts Ave., Boxborough, MA

Analyte	Batch ID	QC Sample	Units	Original Result	Spike Amount	MS Result	%Rec	QC Limits
Petroleum Hydrocarbons	GP5355/GN16139	M45705-6	mg/l	<0.61	5.1	4.3	84.3	75-125%

Associated Samples:
Batch GP5355: M45707-1, M45707-2

Misc. Forms

Custody Documents and Other Forms

Includes the following where applicable:

- Sample Tracking Chronicle

Internal Sample Tracking Chronicle

Exxon Service Station

Job No: M45707

CDM:S/S 3-5805 1425 Massachusetts Ave., Boxborough, MA
Project No: PO#4506003635 WBS#08

Sample Number	Method	Analyzed	By	Prepped	By	Test Codes
M45707-1 Collected: 15-MAR-05 00:00 By: RMB Received: 16-MAR-05 By: RS INF-GW-3/15/05						
M45707-1	EPA 180.1	16-MAR-05 17:30	MA			TURB
M45707-1	EPA 110.2	16-MAR-05 17:45	MA			COL
M45707-1	EPA 160.5	16-MAR-05 18:10	MA			SS
M45707-1	EPA 418.1	18-MAR-05	BF	18-MAR-05	BF	PHC
M45707-1	EPA 160.2	18-MAR-05	BF			TSS
M45707-1	SW846 6010B	18-MAR-05 12:46	LMN	17-MAR-05	OP	PB
M45707-1	EPA 624	18-MAR-05 14:51	AT			V624BTXM
M45707-2 Collected: 15-MAR-05 00:00 By: RMB Received: 16-MAR-05 By: RS EFF-GW-3/15/05						
M45707-2	EPA 160.5	16-MAR-05 17:05	MA			SS
M45707-2	EPA 180.1	16-MAR-05 17:30	MA			TURB
M45707-2	EPA 110.2	16-MAR-05 17:45	MA			COL
M45707-2	EPA 418.1	18-MAR-05	BF	18-MAR-05	BF	PHC
M45707-2	EPA 160.2	18-MAR-05	BF			TSS
M45707-2	SW846 6010B	18-MAR-05 12:24	LMN	17-MAR-05	OP	PB
M45707-2	EPA 624	18-MAR-05 14:13	AT			V624BTXM

ACCUTEST Laboratories
[illegible] Tech Ce[illegible] West, B[illegible]
Marlboro, MA 01752
508-481-6200 FAX: 508-481-6200

Accutest Job #: M45707

Client Information | Facility Information | Analytical Information

EXXONMOBIL CORPORATION - Regional Laboratory Program Northeast

Consultants Company Name: CDM
Project Name: Xom Boxboro
Address: 50 Hampshire St
Street: 1425 Mass Ave
City: Cambridge State: MA Zip: 02139
City: Boxboro State: MA
Project Contact: Jon Welch
ExxonMobil Contact: Eric Errico
Sampler's Name: Ryan Boulds
ExxonMobil Contact Phone #:
Phone #: Ext. Fax #:
Location ID#: 3-5805 WBS#:
AFE #:
PO# Line#

Accutest Sample #	Field ID / Point of Collection	Collection Date	Collection Time	Sampled by	Matrix	# of bottles	Preservation HCL	NaOH	HNO3	H2SO4	MEOH	Encore	Other	None	BTEX 8260 ☐ 624 ☒ 8021 ☐ 524 ☐ MTBE ☒ TBA ☐ Naphthalene ☐ Oxygenates ☐	VOC AQUEOUS 8260 ☐ 624 ☐ 524 ☐ STD ☐ TCL ☐ PPL ☐ MTBE ☐ TBA ☐ Oxygenates ☐	VOC SOIL 8260 ☐ STD ☐ TCL ☐ PPL ☐ MTBE ☐ TBA ☐ Oxygenates ☐ 5035/LOW ☐ 5035MED ☐	VPH RANGES ☐ TARGETS ☐	EPH RANGES ☐ TARGET (PAH) ☐ DIESEL (PAH) ☐	TPH-CTDEP ☐ TPH418.1 ☒	TPH-MAINE GRO ☐ DRO ☐	TPH-8015 GRO ☐ TPH-8015 DRO ☐	METALS TOTAL ☐ DISSOLVED ☐ HM8 ☐ HM5 ☐	METALS TCLP ☐ SPLP ☐ HM8 ☐ HM5 ☐	Total Lead	TSS	Color / Turbidity	Total Settleable Solids
-1	Inf-GW-3/15/05	3/15/05		RMB	GW	9	✓		✓					✓	✓					✓	✓				✓	✓	✓	✓
-2	Eff-GW-3/15/05	3/15/05		RMB	GW	9	✓		✓					✓	✓					✓	✓				✓	✓	✓	✓

29

Turnaround Time (Business days)

- ☐ Std. 10 Business Days — Approved By:/Date
- ☐ 8 Day RUSH
- ☒ 5 Day RUSH [redacted]
- ☐ 3 Day *EMERGENCY*
- ☐ 2 Day *EMERGENCY*
- ☐ 1 Day EMERGENCY

Emergency T/A is for FAX or Lablink Data

Data Deliverable Information

- ☐ Commercial "A"
- ☐ Commercial "B"
- ☐ Full Deliverables
- ☐ Other
- ☐ FULL CLP
- ☐ State Forms
- ☐ Disk Deliverable Format _____

Site Specific: QC Yes ☐ No ☐ If yes, indicate QC sample in Comments and submit triplicate volume.

Comments / Remarks

GW-1 Stds.
MCP Presumptive Certainty

Loc-12F, 5D, 4F, 1D4

Sample Custody must be documented below each time samples change possession, including courier delivery.

Relinquished by Sampler	Date Time	Received by	Relinquished by	Date Time	Received by
1 Ryan M Boulds	3/16/05 0730	1 [signature]	2 [signature]	3/16/05 15:20	2 [signature]
3 [signature]	3/16/05 16:40	3 [signature]	4		4
5		5			

Seal # Preserved where applicable ☐ On Ice ☒ Temp. 0.4°C

New England
ACCUTEST
Laboratories

04/18/05

Technical Report for

Exxon Service Station

CDM:S/S 3-5805 1425 Massachusetts Ave., Boxborough, MA

PO#4506003635 WBS#08

Accutest Job Number: M46301

Sampling Date: 04/07/05

Report to:

Camp Dresser & McKee
50 Hampshire Avenue
Cambridge, MA 02139

ATTN: Jon Welch

Total number of pages in report: 43

ACCREDITED IN ACCORDANCE WITH nelac

Test results contained within this data package meet the requirements of the National Environmental Laboratory Accreditation Conference and/or state specific certification programs as applicable.

Reza Tand
Lab Director

Certifications: MA (M-MA136) CT (PH-0109) NH (250204) RI (00071) ME (MA136) FL (E87579) NY (23346) NJ (MA926) NAVY USACE

This report shall not be reproduced, except in its entirety, without the written approval of Accutest Laboratories.

ACCUTEST Laboratories

SAMPLE DELIVERY GROUP CASE NARRATIVE

Client: Exxon Service Station **Job No:** M46301

Site: CDM:S/S 3-5805 1425 Massachusetts Ave., Boxborough, MA **Report Date** 4/18/2005 11:27:20 A

6 Samples were collected on 04/07/2005 and were received at Accutest on 04/07/2005 properly preserved, at 4.2 Deg. C and intact. These Samples received an Accutest job number of M46301. A listing of the Laboratory Sample ID, Client Sample ID and dates of collection are presented in the Results Summary Section of this report.

Except as noted below, all method specified calibrations and quality control performance criteria were met for this job. For more information, please refer to QC summary pages.

Volatiles by GCMS By Method EPA 624

Matrix: AQ **Batch ID:** MSD2477

- All samples were analyzed within the recommended method holding time.
- All method blanks for this batch meet method specific criteria.
- Sample(s) M46251-3MS, M46251-3MSD were used as the QC samples indicated.
- Only BTX and MTBE requested.

Matrix: AQ **Batch ID:** MSD2478

- All samples were analyzed within the recommended method holding time.
- Sample(s) M46277-2MS, M46277-2MSD were used as the QC samples indicated.
- All method blanks for this batch meet method specific criteria.
- Only BTX and MTBE requested.

Matrix: AQ **Batch ID:** MSD2479

- All samples were analyzed within the recommended method holding time.
- Sample(s) M46459-9MS, M46459-9MSD were used as the QC samples indicated.
- All method blanks for this batch meet method specific criteria.
- Only BTX and MTBE requested.

Metals By Method SW846 6010B

Matrix: AQ **Batch ID:** MP6874

- All samples were digested within the recommended method holding time.
- All samples were analyzed within the recommended method holding time.
- All method blanks for this batch meet method specific criteria.
- Sample(s) M46301-1DUP, M46301-1MS, M46301-1SDL were used as the QC samples for metals.

Wet Chemistry By Method EPA 110.2

Matrix: AQ **Batch ID:** GN16343

- All samples were analyzed within the recommended method holding time.
- All method blanks for this batch meet method specific criteria.
- Sample(s) M46301-1DUP were used as the QC samples for Color, Apparent.
- M46301-1 for Color, Apparent: pH at the time of analysis 6.29.
- M46301-3 for Color, Apparent: pH at the time of analysis 7.38.

Wet Chemistry By Method EPA 160.2

Matrix: AQ	Batch ID: GN16345

- All samples were analyzed within the recommended method holding time.
- All method blanks for this batch meet method specific criteria.
- Sample(s) M46277-2DUP were used as the QC samples for Solids, Total Suspended.

Wet Chemistry By Method EPA 160.5

Matrix: AQ	Batch ID: GN16344

- All samples were analyzed within the recommended method holding time.
- All method blanks for this batch meet method specific criteria.
- Sample(s) M46301-3DUP were used as the QC samples for Solids, Settleable.

Wet Chemistry By Method EPA 180.1

Matrix: AQ	Batch ID: GN16342

- All samples were analyzed within the recommended method holding time.
- All method blanks for this batch meet method specific criteria.
- Sample(s) M46301-3DUP were used as the QC samples for Turbidity.

Wet Chemistry By Method EPA 418.1

Matrix: AQ	Batch ID: GP5441

- All samples were distilled within the recommended method holding time.
- All samples were analyzed within the recommended method holding time.
- All method blanks for this batch meet method specific criteria.
- Sample(s) M46345-1DUP, M46345-2MS were used as the QC samples for Petroleum Hydrocarbons.

The Accutest Laboratories of New England certifies that all analysis were performed within method specification. It is further recommended that this report to be used in its entirety.The Accutest Laboratories of NE, Laboratory Director or assignee as verified by the signature on the cover page has authorized the release of this report(M46301).

Title: MADEP MCP Response Action Analytical Report Certification Form

MADEP MCP Analytical Method Report Certification Form

Laboratory Name:	Accutest Laboratories of New England	Project #:	M46301
Project Location:	CDM:S/S 3-5805 1425 Massachusetts Ave., Boxborough, MA	MADEP RTN [1]	None

This form provides certifications for the following data set:
M46301-1,M46301-2,M46301-3,M46301-4,M46301-5,M46301-6

Test Method:EPA 624, 110.2, 160.2, 165.0, 180.1, 418.1

Sample Matrices: Groundwater Soil/Sediment ( ) Drinking Water ( ) Other: X ( ) ( )

MCP SW-846 Methods Used As specified in MADEP Compendium of Analytical Methods (Check all that apply)					
	8260B ( )	8151A ( )	8330 ( )	6010B (X)	7470A/1A ( )
	8270C ( )	8081A ( )	VPH ( )	6020 ( )	9014M [2] ( )
	8082 ( )	8021B ( )	EPH ( )	7000 S [3] ( )	7196A ( )

1. List Release Tracking Number (RTN) if known
2. M = SW-846 Method 9014 or MADEP Physiologically Available Cyanide (PAC) Method
3. S = SW-846 Methods 7000 Series. List individual method and analyte

An affirmative response to questions A, B, C, and D is required for "Presumptive Certainty status

A	Were all samples received by the laboratory in a condition consistent with that described on the Chain-of-Custody documentation for the data set?	☑	Yes	☐ No [1]
B	Were all QA/QC procedures required for the specified analytical method(s) included in this report followed, including the requirement to note and discuss in a narrative QC data that did not meet appropriate performance standards or guidelines?	☑	Yes	☐ No [1]
C	Does the data included in this report meet all the analytical requirements for "Presumptive Certainty", as described in Section 2.0 (a), (b), (c) and (d) of the MADEP document CAM VII A, "Quality Assurance and Quality Control Guidelines for the Acquisition and Reporting of Analytical Data"?	☑	Yes	☐ No [1]
D	**VPH and EPH methods only:** Was the VPH or EPH method run without significant modifications, as specified in Section 11.3?	☑	Yes	☐ No [1]

A response to questions E and F below is required for "Presumptive Certainty" status

E	Were all QC performance standards and recommendations for the specified methods achieved?	☑ Refer to Narrative	Yes	☐ No [1]
F	Were results for all analyte-list compounds/elements for the specified method(s) reported?	☐ Refer to Narrative	Yes	☑ No [1]

[1] ***All Negative responses must be addressed in an attached Environmental Laboratory case narrative.***

I the undersigned, attest under the pains and penalties of perjury that, based upon my personal inquiry of those responsible for obtaining the information, the material contained in this analytical report is, to the best of my knowledge and belief, accurate and complete.

Signature:		**Position:**	**Laboratory Director**
Printed Name:	**Reza Tand**	**Date:**	**04/18/2005**

Sample Summary

Exxon Service Station

Job No: M46301

CDM:S/S 3-5805 1425 Massachusetts Ave., Boxborough, MA
Project No: PO#4506003635 WBS#08

Sample Number	Collected Date	Time By	Received	Matrix Code	Type	Client Sample ID
M46301-1	04/07/05	12:50 GG	04/07/05	AQ	Influent	INF-GW-040705
M46301-2	04/07/05	13:00 GG	04/07/05	AQ	Influent	ASINF-GW-040705
M46301-3	04/07/05	12:35 GG	04/07/05	AQ	Effluent	EFF-GW-040705
M46301-4	04/07/05	13:05 GG	04/07/05	AQ	Effluent	ASEFF-GW-040705
M46301-5	04/07/05	13:15 GG	04/07/05	AQ	Effluent1	GAC1EFF-GW-040705
M46301-6	04/07/05	13:10 GG	04/07/05	AQ	Effluent2	GAC2EFF-GW-040705

Accutest Laboratories

Report of Analysis

Client Sample ID:	INF-GW-040705		
Lab Sample ID:	M46301-1	**Date Sampled:**	04/07/05
Matrix:	AQ - Influent	**Date Received:**	04/07/05
Method:	EPA 624	**Percent Solids:**	n/a
Project:	CDM:S/S 3-5805 1425 Massachusetts Ave., Boxborough, MA		

	File ID	DF	Analyzed	By	Prep Date	Prep Batch	Analytical Batch
Run #1	D42592.D	1	04/12/05	AT	n/a	n/a	MSD2477
Run #2	D42600.D	100	04/12/05	AT	n/a	n/a	MSD2477

	Purge Volume
Run #1	5.0 ml
Run #2	5.0 ml

Purgeable Aromatics, MTBE

CAS No.	Compound	Result	RL	Units	Q
71-43-2	Benzene	28.7	0.50	ug/l	
108-88-3	Toluene	111	1.0	ug/l	
100-41-4	Ethylbenzene	27.7	1.0	ug/l	
1330-20-7	Xylenes (total)	152	1.0	ug/l	
1634-04-4	Methyl Tert Butyl Ether	5620 [a]	100	ug/l	

CAS No.	Surrogate Recoveries	Run# 1	Run# 2	Limits
17060-07-0	1,2-Dichloroethane-D4 (SUR)	102%	110%	76-138%
2037-26-5	Toluene-D8 (SUR)	95%	86%	86-114%
460-00-4	4-Bromofluorobenzene (SUR)	86%	92%	76-114%

(a) Result is from Run# 2

ND = Not detected
RL = Reporting Limit
E = Indicates value exceeds calibration range

J = Indicates an estimated value
B = Indicates analyte found in associated method blank
N = Indicates presumptive evidence of a compound

Accutest Laboratories

Report of Analysis

Client Sample ID:	INF-GW-040705		
Lab Sample ID:	M46301-1	**Date Sampled:**	04/07/05
Matrix:	AQ - Influent	**Date Received:**	04/07/05
		Percent Solids:	n/a
Project:	CDM:S/S 3-5805 1425 Massachusetts Ave., Boxborough, MA		

Metals Analysis

Analyte	Result	RL	Units	DF	Prep	Analyzed By		Method	Prep Method
Lead	<5.0	5.0	ug/l	1	04/13/05	04/13/05	LMN	SW846 6010B [1]	SW846 3010A [2]

(1) Instrument QC Batch: MA5673
(2) Prep QC Batch: MP6874

RL = Reporting Limit

Accutest Laboratories

Report of Analysis

Client Sample ID:	INF-GW-040705		
Lab Sample ID:	M46301-1	**Date Sampled:**	04/07/05
Matrix:	AQ - Influent	**Date Received:**	04/07/05
		Percent Solids:	n/a
Project:	CDM:S/S 3-5805 1425 Massachusetts Ave., Boxborough, MA		

General Chemistry

Analyte	Result	RL	Units	DF	Analyzed	By	Method
Color, Apparent [a]	20	5	CU	1	04/08/05 08:30	MA	EPA 110.2
Petroleum Hydrocarbons	<0.63	0.63	mg/l	1	04/11/05	BF	EPA 418.1
Solids, Settleable	<0.10	0.10	ml/l/hr	1	04/08/05 08:55	MA	EPA 160.5
Solids, Total Suspended	45.0	4.0	mg/l	1	04/08/05	BF	EPA 160.2
Turbidity	10.1	0.50	NTU	1	04/08/05 08:55	MA	EPA 180.1

(a) pH at the time of analysis 6.29.

RL = Reporting Limit

GC/MS Volatiles

QC Data Summaries

Includes the following where applicable:

- Method Blank Summaries
- Blank Spike Summaries
- Matrix Spike and Duplicate Summaries
- Surrogate Recovery Summaries

Method Blank Summary

Job Number: M46301
Account: EXXONSS Exxon Service Station
Project: CDM:S/S 3-5805 1425 Massachusetts Ave., Boxborough, MA

Sample	File ID	DF	Analyzed	By	Prep Date	Prep Batch	Analytical Batch
MSD2477-MB	D42576.D	1	04/11/05	AT	n/a	n/a	MSD2477

The QC reported here applies to the following samples: **Method:** EPA 624

M46301-1, M46301-3

CAS No.	Compound	Result	RL	Units	Q
71-43-2	Benzene	ND	0.50	ug/l	
100-41-4	Ethylbenzene	ND	1.0	ug/l	
1634-04-4	Methyl Tert Butyl Ether	ND	1.0	ug/l	
108-88-3	Toluene	ND	1.0	ug/l	
1330-20-7	Xylenes (total)	ND	1.0	ug/l	

CAS No.	Surrogate Recoveries		Limits
17060-07-0	1,2-Dichloroethane-D4 (SUR)	99%	76-138%
2037-26-5	Toluene-D8 (SUR)	96%	86-114%
460-00-4	4-Bromofluorobenzene (SUR)	91%	76-114%

Method Blank Summary

Job Number: M46301
Account: EXXONSS Exxon Service Station
Project: CDM:S/S 3-5805 1425 Massachusetts Ave., Boxborough, MA

Sample	File ID	DF	Analyzed	By	Prep Date	Prep Batch	Analytical Batch
MSD2478-MB	D42607.D	1	04/12/05	AT	n/a	n/a	MSD2478

The QC reported here applies to the following samples: **Method:** EPA 624

M46301-4, M46301-5, M46301-6

CAS No.	Compound	Result	RL	Units	Q
71-43-2	Benzene	ND	0.50	ug/l	
100-41-4	Ethylbenzene	ND	1.0	ug/l	
1634-04-4	Methyl Tert Butyl Ether	ND	1.0	ug/l	
108-88-3	Toluene	ND	1.0	ug/l	
1330-20-7	Xylenes (total)	ND	1.0	ug/l	

CAS No.	Surrogate Recoveries		Limits
17060-07-0	1,2-Dichloroethane-D4 (SUR)	112%	76-138%
2037-26-5	Toluene-D8 (SUR)	97%	86-114%
460-00-4	4-Bromofluorobenzene (SUR)	88%	76-114%

Blank Spike Summary

Job Number: M46301
Account: EXXONSS Exxon Service Station
Project: CDM:S/S 3-5805 1425 Massachusetts Ave., Boxborough, MA

Sample	File ID	DF	Analyzed	By	Prep Date	Prep Batch	Analytical Batch
MSD2478-BS	D42605.D	1	04/12/05	AT	n/a	n/a	MSD2478

The QC reported here applies to the following samples: **Method:** EPA 624

M46301-4, M46301-5, M46301-6

CAS No.	Compound	Spike ug/l	BSP ug/l	BSP %	Limits
71-43-2	Benzene	20	21.4	107	37-151
100-41-4	Ethylbenzene	20	20.7	104	37-162
1634-04-4	Methyl Tert Butyl Ether	20	22.6	113	58-150
108-88-3	Toluene	20	21.6	108	47-150
1330-20-7	Xylenes (total)	60	58.9	98	68-136

CAS No.	Surrogate Recoveries	BSP	Limits
17060-07-0	1,2-Dichloroethane-D4 (SUR)	105%	76-138%
2037-26-5	Toluene-D8 (SUR)	101%	86-114%
460-00-4	4-Bromofluorobenzene (SUR)	90%	76-114%

Blank Spike Summary

Job Number: M46301
Account: EXXONSS Exxon Service Station
Project: CDM:S/S 3-5805 1425 Massachusetts Ave., Boxborough, MA

Sample	File ID	DF	Analyzed	By	Prep Date	Prep Batch	Analytical Batch
MSD2479-BS	D42655.D	1	04/14/05	AT	n/a	n/a	MSD2479

The QC reported here applies to the following samples: **Method:** EPA 624

M46301-2

CAS No.	Compound	Spike ug/l	BSP ug/l	BSP %	Limits
71-43-2	Benzene	20	22.2	111	37-151
100-41-4	Ethylbenzene	20	21.6	108	37-162
1634-04-4	Methyl Tert Butyl Ether	20	21.9	110	58-150
108-88-3	Toluene	20	21.5	108	47-150
1330-20-7	Xylenes (total)	60	57.6	96	68-136

CAS No.	Surrogate Recoveries	BSP	Limits
17060-07-0	1,2-Dichloroethane-D4 (SUR)	111%	76-138%
2037-26-5	Toluene-D8 (SUR)	100%	86-114%
460-00-4	4-Bromofluorobenzene (SUR)	90%	76-114%

Method Blank Summary

Job Number: M46301
Account: EXXONSS Exxon Service Station
Project: CDM:S/S 3-5805 1425 Massachusetts Ave., Boxborough, MA

Sample	File ID	DF	Analyzed	By	Prep Date	Prep Batch	Analytical Batch
MSD2479-MB	D42657.D	1	04/14/05	AT	n/a	n/a	MSD2479

The QC reported here applies to the following samples: **Method:** EPA 624

M46301-2

CAS No.	Compound	Result	RL	Units	Q
71-43-2	Benzene	ND	0.50	ug/l	
100-41-4	Ethylbenzene	ND	1.0	ug/l	
1634-04-4	Methyl Tert Butyl Ether	ND	1.0	ug/l	
108-88-3	Toluene	ND	1.0	ug/l	
1330-20-7	Xylenes (total)	ND	1.0	ug/l	

CAS No.	Surrogate Recoveries		Limits
17060-07-0	1,2-Dichloroethane-D4 (SUR)	116%	76-138%
2037-26-5	Toluene-D8 (SUR)	100%	86-114%
460-00-4	4-Bromofluorobenzene (SUR)	91%	76-114%

Blank Spike Summary

Job Number: M46301
Account: EXXONSS Exxon Service Station
Project: CDM:S/S 3-5805 1425 Massachusetts Ave., Boxborough, MA

Sample	File ID	DF	Analyzed	By	Prep Date	Prep Batch	Analytical Batch
MSD2477-BS	D42574.D	1	04/11/05	AT	n/a	n/a	MSD2477

The QC reported here applies to the following samples: **Method:** EPA 624

M46301-1, M46301-3

CAS No.	Compound	Spike ug/l	BSP ug/l	BSP %	Limits
71-43-2	Benzene	20	19.5	98	37-151
100-41-4	Ethylbenzene	20	21.3	107	37-162
1634-04-4	Methyl Tert Butyl Ether	20	20.1	101	58-150
108-88-3	Toluene	20	20.1	101	47-150
1330-20-7	Xylenes (total)	60	58.7	98	68-136

CAS No.	Surrogate Recoveries	BSP	Limits
17060-07-0	1,2-Dichloroethane-D4 (SUR)	100%	76-138%
2037-26-5	Toluene-D8 (SUR)	99%	86-114%
460-00-4	4-Bromofluorobenzene (SUR)	96%	76-114%

Matrix Spike/Matrix Spike Duplicate Summary

Job Number: M46301
Account: EXXONSS Exxon Service Station
Project: CDM:S/S 3-5805 1425 Massachusetts Ave., Boxborough, MA

Sample	File ID	DF	Analyzed	By	Prep Date	Prep Batch	Analytical Batch
M46251-3MS	D42597.D	5	04/12/05	AT	n/a	n/a	MSD2477
M46251-3MSD	D42598.D	5	04/12/05	AT	n/a	n/a	MSD2477
M46251-3	D42589.D	1	04/12/05	AT	n/a	n/a	MSD2477

The QC reported here applies to the following samples: **Method:** EPA 624

M46301-1, M46301-3

CAS No.	Compound	M46251-3 ug/l	Q	Spike ug/l	MS ug/l	MS %	MSD ug/l	MSD %	RPD	Limits Rec/RPD
71-43-2	Benzene	ND		100	105	105	105	105	0	37-151/30
100-41-4	Ethylbenzene	ND		100	104	104	104	104	0	37-162/30
1634-04-4	Methyl Tert Butyl Ether	4.1		100	109	105	105	101	4	46-150/24
108-88-3	Toluene	ND		100	103	103	104	104	1	47-150/30
1330-20-7	Xylenes (total)	ND		300	312	104	293	98	6	66-138/28

CAS No.	Surrogate Recoveries	MS	MSD	M46251-3	Limits
17060-07-0	1,2-Dichloroethane-D4 (SUR)	107%	109%	106%	76-138%
2037-26-5	Toluene-D8 (SUR)	97%	101%	98%	86-114%
460-00-4	4-Bromofluorobenzene (SUR)	87%	82%	86%	76-114%

Matrix Spike/Matrix Spike Duplicate Summary

Job Number: M46301
Account: EXXONSS Exxon Service Station
Project: CDM:S/S 3-5805 1425 Massachusetts Ave., Boxborough, MA

Sample	File ID	DF	Analyzed	By	Prep Date	Prep Batch	Analytical Batch
M46277-2MS	D42628.D	5	04/13/05	AT	n/a	n/a	MSD2478
M46277-2MSD	D42629.D	5	04/13/05	AT	n/a	n/a	MSD2478
M46277-2	D42627.D	1	04/13/05	AT	n/a	n/a	MSD2478

The QC reported here applies to the following samples: **Method:** EPA 624

M46301-4, M46301-5, M46301-6

CAS No.	Compound	M46277-2 ug/l	Q	Spike ug/l	MS ug/l	MS %	MSD ug/l	MSD %	RPD	Limits Rec/RPD
71-43-2	Benzene	ND		100	108	108	105	105	3	37-151/30
100-41-4	Ethylbenzene	ND		100	106	106	106	106	0	37-162/30
1634-04-4	Methyl Tert Butyl Ether	ND		100	117	117	111	111	5	46-150/24
108-88-3	Toluene	ND		100	107	107	105	105	2	47-150/30
1330-20-7	Xylenes (total)	ND		300	302	101	300	100	1	66-138/28

CAS No.	Surrogate Recoveries	MS	MSD	M46277-2	Limits
17060-07-0	1,2-Dichloroethane-D4 (SUR)	110%	97%	106%	76-138%
2037-26-5	Toluene-D8 (SUR)	100%	97%	98%	86-114%
460-00-4	4-Bromofluorobenzene (SUR)	85%	91%	94%	76-114%

Matrix Spike/Matrix Spike Duplicate Summary

Job Number: M46301
Account: EXXONSS Exxon Service Station
Project: CDM:S/S 3-5805 1425 Massachusetts Ave., Boxborough, MA

Sample	File ID	DF	Analyzed	By	Prep Date	Prep Batch	Analytical Batch
M46459-9MS	D42680.D	5	04/15/05	AT	n/a	n/a	MSD2479
M46459-9MSD	D42681.D	5	04/15/05	AT	n/a	n/a	MSD2479
M46459-9	D42676.D	1	04/15/05	AT	n/a	n/a	MSD2479
M46459-9	D42683.D	5	04/15/05	AT	n/a	n/a	MSD2479

The QC reported here applies to the following samples: **Method:** EPA 624

M46301-2

CAS No.	Compound	M46459-9 ug/l	Q	Spike ug/l	MS ug/l	MS %	MSD ug/l	MSD %	RPD	Limits Rec/RPD
71-43-2	Benzene	ND		100	102	102	108	108	6	37-151/30
100-41-4	Ethylbenzene	ND		100	105	105	106	106	1	37-162/30
1634-04-4	Methyl Tert Butyl Ether	431 [a]		100	508	77	512	81	1	46-150/24
108-88-3	Toluene	ND		100	93.4	93	99.4	99	6	47-150/30
1330-20-7	Xylenes (total)	ND		300	276	92	282	94	2	66-138/28

CAS No.	Surrogate Recoveries	MS	MSD	M46459-9	M46459-9	Limits
17060-07-0	1,2-Dichloroethane-D4 (SUR)	115%	113%	120%	121%	76-138%
2037-26-5	Toluene-D8 (SUR)	89%	90%	97%	92%	86-114%
460-00-4	4-Bromofluorobenzene (SUR)	100%	98%	90%	88%	76-114%

(a) Result is from Run #2.

Volatile Surrogate Recovery Summary

Job Number: M46301
Account: EXXONSS Exxon Service Station
Project: CDM:S/S 3-5805 1425 Massachusetts Ave., Boxborough, MA

Method: EPA 624 **Matrix:** AQ

Samples and QC shown here apply to the above method

Lab Sample ID	Lab File ID	S1	S2	S3
M46301-1	D42600.D	110.0	86.0	92.0
M46301-1	D42592.D	102.0	95.0	86.0
M46301-2	D42659.D	113.0	103.0	90.0
M46301-2	D42658.D	115.0	98.0	88.0
M46301-3	D42580.D	106.0	96.0	89.0
M46301-4	D42633.D	108.0	100.0	87.0
M46301-4	D42609.D	109.0	99.0	89.0
M46301-5	D42610.D	111.0	98.0	91.0
M46301-6	D42611.D	112.0	98.0	87.0
M46251-3MS	D42597.D	107.0	97.0	87.0
M46251-3MSD	D42598.D	109.0	101.0	82.0
M46277-2MS	D42628.D	110.0	100.0	85.0
M46277-2MSD	D42629.D	97.0	97.0	91.0
M46459-9MS	D42680.D	115.0	89.0	100.0
M46459-9MSD	D42681.D	113.0	90.0	98.0
MSD2477-BS	D42574.D	100.0	99.0	96.0
MSD2477-MB	D42576.D	99.0	96.0	91.0
MSD2478-BS	D42605.D	105.0	101.0	90.0
MSD2478-MB	D42607.D	112.0	97.0	88.0
MSD2479-BS	D42655.D	111.0	100.0	90.0
MSD2479-MB	D42657.D	116.0	100.0	91.0

Surrogate Compounds	Recovery Limits
S1 = 1,2-Dichloroethane-D4 (SUR)	76-138%
S2 = Toluene-D8 (SUR)	86-114%
S3 = 4-Bromofluorobenzene (SUR)	76-114%

Metals Analysis

QC Data Summaries

Includes the following where applicable:

- Method Blank Summaries
- Matrix Spike and Duplicate Summaries
- Blank Spike and Lab Control Sample Summaries
- Serial Dilution Summaries

BLANK RESULTS SUMMARY
Part 2 - Method Blanks

Login Number: M46301
Account: EXXONSS - Exxon Service Station
Project: CDM:S/S 3-5805 1425 Massachusetts Ave., Boxborough, MA

QC Batch ID: MP6874
Matrix Type: AQUEOUS

Methods: SW846 6010B
Units: ug/l

Prep Date: 04/13/05

Metal	RL	IDL	MB raw	final
Aluminum	200	22		
Antimony	6.0	2.4		
Arsenic	5.0	3.3		
Barium	200	.64		
Beryllium	4.0	.18		
Boron	100	1.8		
Cadmium	4.0	.22		
Calcium	5000	5.9		
Chromium	10	.72		
Cobalt	50	.69		
Copper	25	1.2		
Iron	100	20	anr	
Lead	5.0	1.2	-0.19	<5.0
Magnesium	5000	7.7		
Manganese	15	.36		
Molybdenum	100	.48		
Nickel	40	.49		
Potassium	5000	19		
Selenium	10	1.7		
Silicon	100	11		
Silver	5.0	.12		
Sodium	5000	94		
Strontium	10	.12		
Thallium	10	3.1		
Tin	100	1.7		
Titanium	50	1.6		
Tungsten	100			
Vanadium	50	1.3		
Zinc	20	3.8		

Associated samples MP6874: M46301-1, M46301-2, M46301-3, M46301-4, M46301-5, M46301-6

Results < IDL are shown as zero for calculation purposes
(*) Outside of QC limits
(anr) Analyte not requested

MATRIX SPIKE AND DUPLICATE RESULTS SUMMARY

Login Number: M46301
Account: EXXONSS - Exxon Service Station
Project: CDM:S/S 3-5805 1425 Massachusetts Ave., Boxborough, MA

QC Batch ID: MP6874
Matrix Type: AQUEOUS

Methods: SW846 6010B
Units: ug/l

Prep Date:				04/13/05				04/13/05	
Metal	M46301-1 Original	MS	Spikelot MPIRWS2	% Rec	QC Limits	M46301-1 Original	DUP	RPD	QC Limits
Aluminum									
Antimony									
Arsenic									
Barium									
Beryllium									
Boron									
Cadmium									
Calcium									
Chromium									
Cobalt									
Copper									
Iron	anr								
Lead	0.0	986	1000	98.6	75-125	0.0	0.0	NC	0-20
Magnesium									
Manganese									
Molybdenum									
Nickel									
Potassium									
Selenium									
Silicon									
Silver									
Sodium									
Strontium									
Thallium									
Tin									
Titanium									
Tungsten									
Vanadium									
Zinc									

Associated samples MP6874: M46301-1, M46301-2, M46301-3, M46301-4, M46301-5, M46301-6

Results < IDL are shown as zero for calculation purposes
(*) Outside of QC limits
(N) Matrix Spike Rec. outside of QC limits
(anr) Analyte not requested

SPIKE BLANK AND LAB CONTROL SAMPLE SUMMARY

Login Number: M46301
Account: EXXONSS - Exxon Service Station
Project: CDM:S/S 3-5805 1425 Massachusetts Ave., Boxborough, MA

QC Batch ID: MP6874
Matrix Type: AQUEOUS

Methods: SW846 6010B
Units: ug/l

Prep Date:			04/13/05					04/13/05	
Metal	BSP Result	Spikelot MPIRWS2	% Rec	QC Limits	BSD Result	Spikelot MPIRWS2	% Rec	BSD RPD	QC Limit
Aluminum									
Antimony									
Arsenic									
Barium									
Beryllium									
Boron									
Cadmium									
Calcium									
Chromium									
Cobalt									
Copper									
Iron	anr								
Lead	969	1000	96.9	80-120	987	1000	98.7	1.8	
Magnesium									
Manganese									
Molybdenum									
Nickel									
Potassium									
Selenium									
Silicon									
Silver									
Sodium									
Strontium									
Thallium									
Tin									
Titanium									
Tungsten									
Vanadium									
Zinc									

Associated samples MP6874: M46301-1, M46301-2, M46301-3, M46301-4, M46301-5, M46301-6

Results < IDL are shown as zero for calculation purposes
(*) Outside of QC limits
(anr) Analyte not requested

SERIAL DILUTION RESULTS SUMMARY

Login Number: M46301
Account: EXXONSS - Exxon Service Station
Project: CDM:S/S 3-5805 1425 Massachusetts Ave., Boxborough, MA

QC Batch ID: MP6874
Matrix Type: AQUEOUS

Methods: SW846 6010B
Units: ug/l

Prep Date: 04/13/05

Metal	M46301-1 Original	SDL 1:5	RPD	QC Limits
Aluminum				
Antimony				
Arsenic				
Barium				
Beryllium				
Boron				
Cadmium				
Calcium				
Chromium				
Cobalt				
Copper				
Iron	anr			
Lead	0.00	0.00	NC	0-10
Magnesium				
Manganese				
Molybdenum				
Nickel				
Potassium				
Selenium				
Silicon				
Silver				
Sodium				
Strontium				
Thallium				
Tin				
Titanium				
Tungsten				
Vanadium				
Zinc				

Associated samples MP6874: M46301-1, M46301-2, M46301-3, M46301-4, M46301-5, M46301-6

Results < IDL are shown as zero for calculation purposes
(*) Outside of QC limits
(anr) Analyte not requested

General Chemistry

QC Data Summaries

Includes the following where applicable:

- Method Blank and Blank Spike Summaries
- Duplicate Summaries
- Matrix Spike Summaries

METHOD BLANK AND SPIKE RESULTS SUMMARY
GENERAL CHEMISTRY

Login Number: M46301
Account: EXXONSS - Exxon Service Station
Project: CDM:S/S 3-5805 1425 Massachusetts Ave., Boxborough, MA

Analyte	Batch ID	RL	MB Result	Units	Spike Amount	BSP Result	BSP %Recov	QC Limits
Color, Apparent	GN16343	5	<5	CU				
Petroleum Hydrocarbons	GP5441/GN16369	0.60	<0.60	mg/l	5	4.8	96.0	80-120%
Solids, Settleable	GN16344	0.10	<0.10	ml/l/hr				
Solids, Total Suspended	GN16345	4.0	<4.0	mg/l				
Turbidity	GN16342	0.50	<0.50	NTU				

Associated Samples:
Batch GN16342: M46301-1, M46301-3
Batch GN16343: M46301-1, M46301-3
Batch GN16344: M46301-1, M46301-3
Batch GN16345: M46301-1, M46301-3
Batch GP5441: M46301-1, M46301-3

DUPLICATE RESULTS SUMMARY
GENERAL CHEMISTRY

Login Number: M46301
Account: EXXONSS - Exxon Service Station
Project: CDM:S/S 3-5805 1425 Massachusetts Ave., Boxborough, MA

Analyte	Batch ID	QC Sample	Units	Original Result	DUP Result	RPD	QC Limits
Color, Apparent	GN16343	M46301-1	CU	20	20	0.0	0-20%
Petroleum Hydrocarbons	GP5441/GN16369	M46345-1	mg/l	<0.61	<0.63	0.0	0-20%
Solids, Settleable	GN16344	M46301-3	ml/l/hr	<0.10	<0.10	0.0	0-20%
Solids, Total Suspended	GN16345	M46277-2	mg/l	<4.0	<4.0	0.0	0-20%
Turbidity	GN16342	M46301-3	NTU	<0.50	<0.50	0.0	0-20%

Associated Samples:
Batch GN16342: M46301-1, M46301-3
Batch GN16343: M46301-1, M46301-3
Batch GN16344: M46301-1, M46301-3
Batch GN16345: M46301-1, M46301-3
Batch GP5441: M46301-1, M46301-3

MATRIX SPIKE RESULTS SUMMARY
GENERAL CHEMISTRY

Login Number: M46301
Account: EXXONSS - Exxon Service Station
Project: CDM:S/S 3-5805 1425 Massachusetts Ave., Boxborough, MA

Analyte	Batch ID	QC Sample	Units	Original Result	Spike Amount	MS Result	%Rec	QC Limits
Petroleum Hydrocarbons	GP5441/GN16369	M46345-2	mg/l	<0.61	5.3	5.5	103.8	75-125%

Associated Samples:
Batch GP5441: M46301-1, M46301-3

Misc. Forms

Custody Documents and Other Forms

Includes the following where applicable:

- Sample Tracking Chronicle

Internal Sample Tracking Chronicle

Exxon Service Station

Job No: M46301

CDM:S/S 3-5805 1425 Massachusetts Ave., Boxborough, MA
Project No: PO#4506003635 WBS#08

Sample Number	Method	Analyzed	By	Prepped	By	Test Codes
M46301-1 Collected: 07-APR-05 12:50 By: GG Received: 07-APR-05 By: RS INF-GW-040705						
M46301-1	EPA 160.2	08-APR-05	BF			TSS
M46301-1	EPA 110.2	08-APR-05 08:30	MA			COL
M46301-1	EPA 160.5	08-APR-05 08:55	MA			SS
M46301-1	EPA 180.1	08-APR-05 08:55	MA			TURB
M46301-1	EPA 418.1	11-APR-05	BF	11-APR-05	BF	PHC
M46301-1	EPA 624	12-APR-05 03:43	AT			V624BTXM
M46301-1	EPA 624	12-APR-05 10:18	AT			V624BTXM
M46301-1	SW846 6010B	13-APR-05 15:09	LMN	13-APR-05	OP	PB
M46301-2 Collected: 07-APR-05 13:00 By: GG Received: 07-APR-05 By: RS ASINF-GW-040705						
M46301-2	SW846 6010B	13-APR-05 15:20	LMN	13-APR-05	OP	PB
M46301-2	EPA 624	14-APR-05 16:00	AT			V624BTXM
M46301-2	EPA 624	14-APR-05 16:53	AT			V624BTXM
M46301-3 Collected: 07-APR-05 12:35 By: GG Received: 07-APR-05 By: RS EFF-GW-040705						
M46301-3	EPA 160.2	08-APR-05	BF			TSS
M46301-3	EPA 110.2	08-APR-05 08:30	MA			COL
M46301-3	EPA 160.5	08-APR-05 08:55	MA			SS
M46301-3	EPA 180.1	08-APR-05 08:55	MA			TURB
M46301-3	EPA 418.1	11-APR-05	BF	11-APR-05	BF	PHC
M46301-3	EPA 624	11-APR-05 20:08	AT			V624BTXM
M46301-3	SW846 6010B	13-APR-05 15:37	LMN	13-APR-05	OP	PB
M46301-4 Collected: 07-APR-05 13:05 By: GG Received: 07-APR-05 By: RS ASEFF-GW-040705						
M46301-4	EPA 624	12-APR-05 17:32	AT			V624BTXM
M46301-4	EPA 624	13-APR-05 11:39	AT			V624BTXM
M46301-4	SW846 6010B	13-APR-05 15:42	LMN	13-APR-05	OP	PB
M46301-5 Collected: 07-APR-05 13:15 By: GG Received: 07-APR-05 By: RS GAC1EFF-GW-040705						

Internal Sample Tracking Chronicle

Exxon Service Station

Job No: M46301

CDM:S/S 3-5805 1425 Massachusetts Ave., Boxborough, MA
Project No: PO#4506003635 WBS#08

Sample Number	Method	Analyzed	By	Prepped	By	Test Codes
M46301-5	EPA 624	12-APR-05 18:11	AT			V624BTXM
M46301-5	SW846 6010B	13-APR-05 15:48	LMN	13-APR-05	OP	PB
M46301-6 Collected: 07-APR-05 13:40 By: GG Received: 07-APR-05 By: RS GAC2EFF-GW-040705						
M46301-6	EPA 624	12-APR-05 18:49	AT			V624BTXM
M46301-6	SW846 6010B	13-APR-05 15:54	LMN	13-APR-05	OP	PB

ACCUTEST Laboratories
495 Tech Center West, Bldg. 1
Marlboro, MA 01752
508-481-6200 FAX: 508-481-6200

Accutest Job #: M46301

Client Information | **Facility Information**

EXXONMOBIL CORPORATION - Regional Laboratory Program Northeast

Consultants Company Name: COM
Project Name: XOM BOXBORO
Address: 50 HAMPSHIRE STREET
Street: ~~1125~~ 1425 MASS AVE.
City: CAMBRIDGE State: MA Zip: 02139
City: BOXBORO State: MA
Project Contact: JON WELCH
ExxonMobil Contact: ERIC ERRICO
Sampler's Name: GEORGINE GRISSOP
ExxonMobil Contact Phone #: ~~ERIC ERRICO~~
Phone #: 617-452-6000 Ext. Fax #:
Location ID#: 3-5805 WBS#
AFE #:
PO# Line#

Analytical Information

Accutest Sample #	Field ID / Point of Collection	Collection Date	Collection Time	Sampled by	Matrix	# of bottles	Preservation: HCL	NaOH	HNO3	H2SO4	MEOH	Encore	Other	None	BTEX 8260 ☐ 624 ☒ 8021 ☒ 524 ☐ MTBE ☒ TBA ☐ Naphthalene ☐ Oxygenates ☐	VOC AQUEOUS 8260 ☐ 624 ☐ 524 ☐ STD ☐ TCL ☐ PPL ☐ MTBE ☐ TBA ☐ Oxygenates ☐	VOC SOIL 8260 ☐ STD ☐ TCL ☐ PPL ☐ MTBE ☐ TBA ☐ Oxygenates ☐ 5035/LOW ☐ 5035MED ☐	VPH RANGES ☐ TARGETS ☐	EPH RANGES ☐ TARGET (PAH) ☐ DIESEL (PAH) ☐	TPH-CTDEP ☐ TPH418.1 ☒	TPH-MAINE GRO ☐ DRO ☐	TPH-8015 GRO ☐ TPH-8015 DRO ☐	METALS TOTAL ☐ DISSOLVED ☐ HM8 ☐ HM5 ☐	METALS TCLP ☐ SPLP ☐ HM8 ☐ HM5 ☐	TSS	Total Settleable	Total Lead	Color / Turbidity
-1	Inf-GW-040705*	040705	12:50	GG	GW	10	✓		✓					✓	✓					✓					✓	✓	✓	✓
~~-2~~ 2	ASInf-GW-040705	040705	13:00	GG	GW	3	✓		✓						✓												✓	
-3	Eff-GW-040705*	040705	12:35	GG	GW	10	✓		✓					✓	✓					✓					✓	✓	✓	✓
-4	ASEFF-GW-040705	040705	13:05	GG	GW	3	✓		✓						✓												✓	
-5	GAC1EFF-GW-040705	040705	13:15	GG	GW	3	✓		✓						✓												✓	
-6	GAC2EFF-GW-040705	040705	13:10	GG	GW	3	✓		✓						✓												✓	

Turnaround Time (Business days)

- ☒ Std. 10 Business Days
- ☐ 8 Day RUSH
- ☒ 5 Day RUSH
- ☐ 3 Day *EMERGENCY*
- ☐ 2 Day *EMERGENCY*
- ☐ 1 Day EMERGENCY

Approved By:/Date

Emergency T/A is for FAX or Lablink Data

Data Deliverable Information

- ☐ Commercial "A"
- ☐ Commercial "B"
- ☐ Full Deliverables
- ☐ Other
- ☐ FULL CLP Lev. 10E, 13A
- ☐ State Forms 4C3
- ☐ Disk Deliverable Format 5B

Site Specific: QC Yes ☐ No ☐ If yes, indicate QC sample in Comments and submit triplicate volume.

Comments / Remarks

*TAT is 5 days, all other samples 10 day TAT
- All Total Lead samples are 5 day T/
MCP PRESUMPTIVE CERTAINTY REQUIRED
GW-1 STANDARDS.

Sample Custody must be documented below each time samples change possession, including courier delivery.

Relinquished by Sampler:	Date Time:	Received by:	Relinquished by:	Date Time:	Received by:
1 Georgine Grissop	4/7/05 17:00	1	2		2
Relinquished by: 3	Date Time:	Received by: 3	Relinquished by: 4	Date Time:	Received by: 4
Relinquished by:	Date Time:	Received by: 5	Seal #	Preserved where applicable ☐	On Ice ☑ Temp. 4.2

New England
ACCUTEST.
Laboratories

06/09/05

Technical Report for

Exxon Service Station

CDM:S/S 3-5805 1425 Massachusetts Ave., Boxborough, MA

PO#4506003635 WBS#08

Accutest Job Number: M47349

Sampling Date: 05/16/05

Report to:

Camp Dresser & McKee
50 Hampshire Avenue
Cambridge, MA 02139

ATTN: Jon Welch

Total number of pages in report: **48**

ACCREDITED IN ACCORDANCE WITH nelac

Test results contained within this data package meet the requirements of the National Environmental Laboratory Accreditation Conference and/or state specific certification programs as applicable.

Reza Pand
Lab Director

Certifications: MA (M-MA136) CT (PH-0109) NH (250204) RI (00071) ME (MA136) FL (E87579) NY (23346) NJ (MA926) NAVY USACE

This report shall not be reproduced, except in its entirety, without the written approval of Accutest Laboratories.

Table of Contents

Sections: 1 2 3 4 5 6 7

-1-

Section 1: Sample Summary 3
Section 2: Case Narrative/Conformance Summary 4
Section 3: Sample Results 6
3.1: M47349-1: GW-INF-051605 6
3.2: M47349-2: GW-EFF-051605 9
3.3: M47349-3: GW-GAC2EFF-051605 12
3.4: M47349-4: GW-GAC1EFF-051605 14
3.5: M47349-5: GW-ASEFF-051605 16
3.6: M47349-6: GW-OWEFF-051605 18
Section 4: Misc. Forms 20
4.1: Chain of Custody 21
4.2: MCP Form 22
4.3: Sample Tracking Chronicle 23
Section 5: GC/MS Volatiles - QC Data Summaries 25
5.1: Method Blank Summary 26
5.2: Blank Spike Summary 29
5.3: Matrix Spike/Matrix Spike Duplicate Summary 32
5.4: Surrogate Recovery Summaries 35
Section 6: Metals Analysis - QC Data Summaries 36
6.1: Prep QC MP7085: Pb 37
6.2: Prep QC MP7161: Pb 41
Section 7: General Chemistry - QC Data Summaries 45
7.1: Method Blank and Spike Results Summary 46
7.2: Duplicate Results Summary 47
7.3: Matrix Spike Results Summary 48

Sample Summary

Exxon Service Station

Job No: M47349

CDM:S/S 3-5805 1425 Massachusetts Ave., Boxborough, MA
Project No: PO#4506003635 WBS#08

Sample Number	Collected Date	Time By	Received	Matrix Code	Type	Client Sample ID
M47349-1	05/16/05	15:10 RMB	05/16/05	AQ	Influent	GW-INF-051605
M47349-2	05/16/05	14:50 RMB	05/16/05	AQ	Effluent	GW-EFF-051605
M47349-3	05/16/05	15:20 RMB	05/16/05	AQ	Ground Water	GW-GAC2EFF-051605
M47349-4	05/16/05	15:25 RMB	05/16/05	AQ	Ground Water	GW-GAC1EFF-051605
M47349-5	05/16/05	15:40 RMB	05/16/05	AQ	Ground Water	GW-ASEFF-051605
M47349-6	05/16/05	15:45 RMB	05/16/05	AQ	Ground Water	GW-OWEFF-051605

ACCUTEST Laboratories

2

SAMPLE DELIVERY GROUP CASE NARRATIVE

Client: Exxon Service Station **Job No** M47349

Site: CDM:S/S 3-5805 1425 Massachusetts Ave., Boxborough, MA **Report Date** 6/8/2005 5:25:15 PM

6 Samples were collected on 05/16/2005 and were received at Accutest on 05/16/2005 properly preserved, at 3.4 Deg. C and intact. These Samples received an Accutest job number of M47349. A listing of the Laboratory Sample ID, Client Sample ID and dates of collection are presented in the Results Summary Section of this report.

Except as noted below, all method specified calibrations and quality control performance criteria were met for this job. For more information, please refer to QC summary pages.

Volatiles by GCMS By Method EPA 624

Matrix AQ **Batch ID:** MSD2504

- All samples were analyzed within the recommended method holding time.
- Sample(s) M47202-18MS, M47202-18MSD were used as the QC samples indicated.
- All method blanks for this batch meet method specific criteria.
- Only BTX and MTBE requested.

Matrix AQ **Batch ID:** MSD2508

- All samples were analyzed within the recommended method holding time.
- Sample(s) M47503-6MS, M47503-6MSD were used as the QC samples indicated.
- All method blanks for this batch meet method specific criteria.
- Only BTX and MTBE requested.

Matrix AQ **Batch ID:** MSD2509

- All samples were analyzed within the recommended method holding time.
- All method blanks for this batch meet method specific criteria.
- Sample(s) M47648-2MS, M47648-2MSD were used as the QC samples indicated.
- Only BTX and MTBE requested.

Metals By Method SW846 6010B

Matrix AQ **Batch ID:** MP7085

- All samples were digested within the recommended method holding time.
- All samples were analyzed within the recommended method holding time.
- All method blanks for this batch meet method specific criteria.
- Sample(s) M47350-1ADUP, M47350-1AMS, M47350-1ASDL were used as the QC samples for metals.

Matrix AQ **Batch ID:** MP7161

- All samples were digested within the recommended method holding time.
- All samples were analyzed within the recommended method holding time.
- All method blanks for this batch meet method specific criteria.
- Sample(s) M47435-2DUP, M47435-2MS, M47435-2SDL were used as the QC samples for metals.

Wet Chemistry By Method EPA 110.2

Matrix AQ	Batch ID: GN16762

- All samples were analyzed within the recommended method holding time.
- All method blanks for this batch meet method specific criteria.
- Sample(s) M47349-2DUP were used as the QC samples for Color, Apparent.
- M47349-1 for Color, Apparent: pH at the time of analysis 6.17.
- M47349-2 for Color, Apparent: pH at the time of analysis 9.12.

Wet Chemistry By Method EPA 160.2

Matrix AQ	Batch ID: GN16837

- All samples were analyzed within the recommended method holding time.
- All method blanks for this batch meet method specific criteria.
- Sample(s) M47349-2DUP were used as the QC samples for Solids, Total Suspended.

Wet Chemistry By Method EPA 160.5

Matrix AQ	Batch ID: GN16760

- All samples were analyzed within the recommended method holding time.
- All method blanks for this batch meet method specific criteria.
- Sample(s) M47349-1DUP were used as the QC samples for Solids, Settleable.

Wet Chemistry By Method EPA 180.1

Matrix AQ	Batch ID: GN16761

- All samples were analyzed within the recommended method holding time.
- All method blanks for this batch meet method specific criteria.
- Sample(s) M47349-2DUP were used as the QC samples for Turbidity.

Wet Chemistry By Method EPA 418.1

Matrix AQ	Batch ID: GP5560

- All samples were distilled within the recommended method holding time.
- All samples were analyzed within the recommended method holding time.
- All method blanks for this batch meet method specific criteria.
- Sample(s) M47345-1DUP, M47349-2MS were used as the QC samples for Petroleum Hydrocarbons.

The Accutest Laboratories of New England certifies that all analysis were performed within method specification. It is further recommended that this report to be used in its entirety.The Accutest Laboratories of NE, Laboratory Director or assignee as verified by the signature on the cover page has authorized the release of this report(M47349).

Report of Analysis

Client Sample ID:	GW-INF-051605		
Lab Sample ID:	M47349-1	Date Sampled:	05/16/05
Matrix:	AQ - Influent	Date Received:	05/16/05
Method:	EPA 624	Percent Solids:	n/a
Project:	CDM:S/S 3-5805 1425 Massachusetts Ave., Boxborough, MA		

	File ID	DF	Analyzed	By	Prep Date	Prep Batch	Analytical Batch
Run #1	D43426.D	1	05/20/05	AT	n/a	n/a	MSD2504
Run #2	D43435.D	50	05/20/05	AT	n/a	n/a	MSD2504

	Purge Volume
Run #1	5.0 ml
Run #2	5.0 ml

Purgeable Aromatics, MTBE

CAS No.	Compound	Result	RL	Units	Q
71-43-2	Benzene	23.7	0.50	ug/l	
108-88-3	Toluene	ND	1.0	ug/l	
100-41-4	Ethylbenzene	ND	1.0	ug/l	
1330-20-7	Xylenes (total)	10.1	1.0	ug/l	
1634-04-4	Methyl Tert Butyl Ether	5100 [a]	50	ug/l	

CAS No.	Surrogate Recoveries	Run# 1	Run# 2	Limits
17060-07-0	1,2-Dichloroethane-D4 (SUR)	130%	103%	76-138%
2037-26-5	Toluene-D8 (SUR)	89%	95%	86-114%
460-00-4	4-Bromofluorobenzene (SUR)	98%	96%	76-114%

(a) Result is from Run# 2

ND = Not detected
RL = Reporting Limit
E = Indicates value exceeds calibration range

J = Indicates an estimated value
B = Indicates analyte found in associated method blank
N = Indicates presumptive evidence of a compound

Accutest Laboratories

Report of Analysis

3.1 3

Client Sample ID:	GW-INF-051605		
Lab Sample ID:	M47349-1	Date Sampled:	05/16/05
Matrix:	AQ - Influent	Date Received:	05/16/05
		Percent Solids:	n/a
Project:	CDM:S/S 3-5805 1425 Massachusetts Ave., Boxborough, MA		

Metals Analysis

Analyte	Result	RL	Units	DF	Prep	Analyzed	By	Method	Prep Method
Lead	<5.0	5.0	ug/l	1	05/18/05	05/19/05	LMN	SW846 6010B [1]	SW846 3010A [2]

(1) Instrument QC Batch: MA5842
(2) Prep QC Batch: MP7085

RL = Reporting Limit

Accutest Laboratories

Report of Analysis

Client Sample ID:	GW-INF-051605		
Lab Sample ID:	M47349-1	Date Sampled:	05/16/05
Matrix:	AQ - Influent	Date Received:	05/16/05
		Percent Solids:	n/a
Project:	CDM:S/S 3-5805 1425 Massachusetts Ave., Boxborough, MA		

General Chemistry

Analyte	Result	RL	Units	DF	Analyzed	By	Method
Color, Apparent [a]	15	5	CU	1	05/16/05 18:02	MA	EPA 110.2
Petroleum Hydrocarbons	<0.61	0.61	mg/l	1	05/18/05	BF	EPA 418.1
Solids, Settleable	<0.10	0.10	ml/l/hr	1	05/16/05 18:25	MA	EPA 160.5
Solids, Total Suspended	18.0	4.0	mg/l	1	05/23/05	BF	EPA 160.2
Turbidity	16.4	0.50	NTU	1	05/16/05 17:42	MA	EPA 180.1

(a) pH at the time of analysis 6.17.

RL = Reporting Limit

Misc. Forms

Custody Documents and Other Forms

Includes the following where applicable:

- Chain of Custody
- MCP Form
- Sample Tracking Chronicle

ACCUTEST Laboratories

CHAIN OF CUSTODY

495 Tech Center West, Bldg. 1
Marlboro, MA 01752
508-481-6200 FAX: 508-481-6200

Accutest Job #: M47349

Client Information | **Facility Information**

EXXONMOBIL CORPORATION - Regional Laboratory Program Northeast

Consultants Company Name: CDM	Project Name: XOM Boxboro
Address: 50 Hampshire St.	Street: 1425 Mass. Ave
City: Cambridge State: MA Zip: 02139	City: Boxboro State: MA
Project Contact: Jon Welch	ExxonMobil Contact: Eric Errico
Sampler's Name: Ryan Bouldin	ExxonMobil Contact Phone #:
Phone #: 617-452-6000 Ext. Fax #:	Location ID#: 3-5805 WBS#
AFE #:	PO#: Line#

Analytical Information

Accutest Sample #	Field ID / Point of Collection	Collection Date	Collection Time	Sampled by	Matrix	# of bottles	HCL	NaOH	HNO3	H2SO4	MEOH	Encore	Other	None	BTEX 8260 ☐ 624 ☐ 8021 ☐ 524 ☐ MTBE ☐ TBA ☐ Naphthalene ☐ Oxygenates ☐	VOC AQUEOUS 8260 ☐ 624 ☐ 524 ☐ STD ☐ TCL ☐ PPL ☐ MTBE ☐ TBA ☐ Oxygenates ☐	VOC SOIL 8260 ☐ STD ☐ TCL ☐ PPL ☐ MTBE ☐ TBA ☐ Oxygenates ☐ 5035/LOW ☐ 5035MED ☐	VPH RANGES ☐ TARGETS ☐	EPH RANGES ☐ TARGET (PAH) ☐ DIESEL (PAH) ☐	TPH-CTDEP ☐ TPH418.1 ☐	TPH-MAINE GRO ☐ DRO ☐	TPH-8015 GRO ☐ TPH-8015 DRO ☐	METALS TOTAL ☐ DISSOLVED ☐ HM8 ☐ HM5 ☐	METALS TCLP ☐ SPLP ☐ HM8 ☐ HM5 ☐	TSS	Total Settleable Solids	Color/Turbidity	Total Lead
-1	GW-Inf-051605*	5/16/05	1510	RMB	GW	10	✓		✓					✓	✓					✓					✓	✓	✓	✓
-2	GW-Eff-051605*	↓	1450	↓	↓	10	✓		✓					✓	✓					✓					✓	✓	✓	✓
-3	GW-GAC2Eff-051605	↓	1520	↓	↓	3	✓		✓						✓													✓
-4	GW-GAC1Eff-051605	↓	1525	↓	↓	3	✓		✓						✓													✓
-5	GW-ASEff-051605	↓	1540	↓	↓	3	✓		✓						✓													✓
-6	GW-OWEff-051605	↓	1545	↓	↓	3	✓		✓						✓													✓

Turnaround Time (Business days)

- ☒ Std. 10 Business Days — Approved By:/Date
- ☐ 8 Day RUSH
- ☒ 5 Day RUSH
- ☐ 3 Day EMERGENCY
- ☐ 2 Day EMERGENCY
- ☐ 1 Day EMERGENCY

Emergency T/A is for FAX or Lablink Data

Data Deliverable Information

- ☐ Commercial "A"
- ☐ Commercial "B"
- ☐ Full Deliverables
- ☐ Other
- ☐ FULL CLP
- ☐ State Forms
- ☐ Disk Deliverable Format _____

Site Specific: QC Yes ☐ No ☐ If yes, indicate QC sample in Comments and submit triplicate volume.

Comments / Remarks

* 5 day Rush TAT
GW-1 Stds. Apply
MCP Presumptive Certainty Required

Loc-11A, 5C, 4C, 4G4

Sample Custody must be documented below each time samples change possession, including courier delivery.

Relinquished by Sampler	Date Time	Received by	Relinquished by	Date Time	Received by
1 Ryan M Bouldin	5/16/05 1650	1 Myron Sweeney	2		2
3		3	4		4
5		5	Seal #	Preserved where applicable ☑	On Ice ☑ 3.4°C Temp.

M47349: Chain of Custody
Page 1 of 1

MADEP MCP Analytical Method Report Certification Form

Laboratory Name:	Accutest Laboratories of New England	Project #:	M47349
Project Location:	CDM:S/S 3-5805 1425 Massachusetts Ave., Boxborough, MA	MADEP RTN [1]	None

This form provides certifications for the following data set:
M47349-1,M47349-2,M47349-3,M47349-4,M47349-5,M47349-6

Test Method:EPA 624, 110.2, 160.2, 160.5, 180.1, 418.1, and below

Sample Matrices: Groundwater X Soil/Sediment ( ) Drinking Water ( ) Other: ( ) ( )

MCP SW-846 Methods Used As specified in MADEP Compendium of Analytical Methods (Check all that apply)					
	8260B ( )	8151A ( )	8330 ( )	6010B (X)	7470A/1A ( )
	8270C ( )	8081A ( )	VPH ( )	6020 ( )	9014M [2] ( )
	8082 ( )	8021B ( )	EPH ( )	7000 S [3] ( )	7196A ( )

1 List Release Tracking Number (RTN) if known
2 M: SW-846 Method 9014 of MADEP Physiologically Available Cyanide (PAC) Method
3 S: SW-846 Methods 7000 Series List individual method and analyte

An affirmative response to questions A, B, C, and D is required for "Presumptive Certainty status

A	Were all samples received by the laboratory in a condition consistent with that described on the Chain-of-Custody documentation for the data set?	☑	Yes	☐ No [1]
B	Were all QA/QC procedures required for the specified analytical method(s) included in this report followed, including the requirement to note and discuss in a narrative QC data that did not meet appropriate performance standards or guidelines?	☑	Yes	☐ No [1]
C	Does the data included in this report meet all the analytical requirements for "Presumptive Certainty", as described in Section 2.0 (a), (b), (c) and (d) of the MADEP document CAM VII A, "Quality Assurance and Quality Control Guidelines for the Acquisition and Reporting of Analytical Data"?	☑	Yes	☐ No [1]
D	**VPH and EPH methods only:** Was the VPH or EPH method run without significant modifications, as specified in Section 11.3?	☑	Yes	☐ No [1]

A response to questions E and F below is required for "Presumptive Certainty" status

E	Were all QC performance standards and recommendations for the specified methods achieved?	☑ Refer to Narrative	Yes	☐ No [1]
F	Were results for all analyte-list compounds/elements for the specified method(s) reported?	☐ Refer to Narrative	Yes	☑ No [1]

[1] ***All Negative responses must be addressed in an attached Environmental Laboratory case narrative.***

I the undersigned, attest under the pains and penalties of perjury that, based upon my personal inquiry of those responsible for obtaining the information, the material contained in this analytical report is, to the best of my knowledge and belief, accurate and complete.

Signature:		Position:	Laboratory Director
Printed Name:	Reza Tand	Date:	06/08/2005

Internal Sample Tracking Chronicle

Exxon Service Station

Job No: M47349

CDM:S/S 3-5805 1425 Massachusetts Ave., Boxborough, MA
Project No: PO#4506003635 WBS#08

Sample Number	Method	Analyzed	By	Prepped	By	Test Codes
M47349-1 Collected:16-MAY-05 15:10 By:RMB Received:16-MAY-05 By:RS CW-INF-051605						
M47349-1	EPA 180.1	16-MAY-05 17:42	MA			TURB
M47349-1	EPA 110.2	16-MAY-05 18:02	MA			COL
M47349-1	EPA 160.5	16-MAY-05 18:25	MA			SS
M47349-1	EPA 418.1	18-MAY-05	BF	18-MAY-05	BF	PHC
M47349-1	SW846 6010B	19-MAY-05 20:14	LMN	18-MAY-05	OP	PB
M47349-1	EPA 624	20-MAY-05 00:36	AT			V624BTXM
M47349-1	EPA 624	20-MAY-05 09:49	AT			V624BTXM
M47349-1	EPA 160.2	23-MAY-05	BF			TSS
M47349-2 Collected:16-MAY-05 14:50 By:RMB Received:16-MAY-05 By:RS CW-EFF-051605						
M47349-2	EPA 180.1	16-MAY-05 17:42	MA			TURB
M47349-2	EPA 110.2	16-MAY-05 18:02	MA			COL
M47349-2	EPA 160.5	16-MAY-05 18:25	MA			SS
M47349-2	EPA 418.1	18-MAY-05	BF	18-MAY-05	BF	PHC
M47349-2	EPA 624	19-MAY-05 16:54	AT			V624BTXM
M47349-2	SW846 6010B	19-MAY-05 20:19	LMN	18-MAY-05	OP	PB
M47349-2	EPA 160.2	23-MAY-05	BF			TSS
M47349-3 Collected:16-MAY-05 15:20 By:RMB Received:16-MAY-05 By:RS CW-GAC2EFF-051605						
M47349-3	EPA 624	25-MAY-05 20:47	AT			V624BTXM
M47349-3	SW846 6010B	03-JUN-05 17:32	LMN	27-MAY-05	OP	PB
M47349-4 Collected:16-MAY-05 15:25 By:RMB Received:16-MAY-05 By:RS CW-GAC1EFF-051605						
M47349-4	EPA 624	25-MAY-05 21:25	AT			V624BTXM
M47349-4	SW846 6010B	03-JUN-05 17:38	LMN	27-MAY-05	OP	PB
M47349-5 Collected:16-MAY-05 15:40 By:RMB Received:16-MAY-05 By:RS CW-ASEFF-051605						
M47349-5	EPA 624	25-MAY-05 22:04	AT			V624BTXM
M47349-5	EPA 624	27-MAY-05 17:56	AT			V624BTXM

Internal Sample Tracking Chronicle

Exxon Service Station

Job No: M47349

CDM:S/S 3-5805 1425 Massachusetts Ave., Boxborough, MA
Project No: PO#4506003635 WBS#08

Sample Number	Method	Analyzed	By	Prepped	By	Test Codes
M47349-5	SW846 6010B	03-JUN-05 17:44	LMN	27-MAY-05	OP	PB
M47349-6 Collected: 16-MAY-05 15:45 By: RMB Received: 16-MAY-05 By: RS GW OWEFF 051605						
M47349-6	EPA 624	25-MAY-05 22:43	AT			V624BTXM
M47349-6	EPA 624	26-MAY-05 11:43	AT			V624BTXM
M47349-6	SW846 6010B	03-JUN-05 17:50	LMN	27-MAY-05	OP	PB

QC Data Summaries

Includes the following where applicable:

- Method Blank Summaries
- Blank Spike Summaries
- Matrix Spike and Duplicate Summaries
- Surrogate Recovery Summaries

Method Blank Summary

Job Number: M47349
Account: EXXONSS Exxon Service Station
Project: CDM:S/S 3-5805 1425 Massachusetts Ave., Boxborough, MA

Sample	File ID	DF	Analyzed	By	Prep Date	Prep Batch	Analytical Batch
MSD2504-MB	D43411.D	1	05/19/05	AT	n/a	n/a	MSD2504

The QC reported here applies to the following samples: Method: EPA 624

M47349-1, M47349-2

CAS No.	Compound	Result	RL	Units	Q
71-43-2	Benzene	ND	0.50	ug/l	
100-41-4	Ethylbenzene	ND	1.0	ug/l	
1634-04-4	Methyl Tert Butyl Ether	ND	1.0	ug/l	
108-88-3	Toluene	ND	1.0	ug/l	
1330-20-7	Xylenes (total)	ND	1.0	ug/l	

CAS No.	Surrogate Recoveries		Limits
17060-07-0	1,2-Dichloroethane-D4 (SUR)	109%	76-138%
2037-26-5	Toluene-D8 (SUR)	94%	86-114%
460-00-4	4-Bromofluorobenzene (SUR)	100%	76-114%

Method Blank Summary

Job Number: M47349
Account: EXXONSS Exxon Service Station
Project: CDM:S/S 3-5805 1425 Massachusetts Ave., Boxborough, MA

Sample	File ID	DF	Analyzed	By	Prep Date	Prep Batch	Analytical Batch
MSD2508-MB	D43557.D	1	05/25/05	AT	n/a	n/a	MSD2508

The QC reported here applies to the following samples: Method: EPA 624

M47349-3, M47349-4, M47349-5, M47349-6

CAS No.	Compound	Result	RL	Units	Q
71-43-2	Benzene	ND	0.50	ug/l	
100-41-4	Ethylbenzene	ND	1.0	ug/l	
1634-04-4	Methyl Tert Butyl Ether	ND	1.0	ug/l	
108-88-3	Toluene	ND	1.0	ug/l	
1330-20-7	Xylenes (total)	ND	1.0	ug/l	

CAS No.	Surrogate Recoveries		Limits
17060-07-0	1,2-Dichloroethane-D4 (SUR)	114%	76-138%
2037-26-5	Toluene-D8 (SUR)	97%	86-114%
460-00-4	4-Bromofluorobenzene (SUR)	98%	76-114%

Method Blank Summary

Job Number: M47349
Account: EXXONSS Exxon Service Station
Project: CDM:S/S 3-5805 1425 Massachusetts Ave., Boxborough, MA

Sample	File ID	DF	Analyzed	By	Prep Date	Prep Batch	Analytical Batch
MSD2509-MB	D43590.D	1	05/27/05	AT	n/a	n/a	MSD2509

The QC reported here applies to the following samples: Method: EPA 624

M47349-5

CAS No.	Compound	Result	RL	Units	Q
1634-04-4	Methyl Tert Butyl Ether	ND	1.0	ug/l	

CAS No.	Surrogate Recoveries		Limits
17060-07-0	1,2-Dichloroethane-D4 (SUR)	116%	76-138%
2037-26-5	Toluene-D8 (SUR)	97%	86-114%
460-00-4	4-Bromofluorobenzene (SUR)	101%	76-114%

Blank Spike Summary

Job Number: M47349
Account: EXXONSS Exxon Service Station
Project: CDM:S/S 3-5805 1425 Massachusetts Ave., Boxborough, MA

Sample	File ID	DF	Analyzed	By	Prep Date	Prep Batch	Analytical Batch
MSD2504-BS	D43409.D	1	05/19/05	AT	n/a	n/a	MSD2504

The QC reported here applies to the following samples: Method: EPA 624

M47349-1, M47349-2

CAS No.	Compound	Spike ug/l	BSP ug/l	BSP %	Limits
71-43-2	Benzene	20	16.6	83	37-151
100-41-4	Ethylbenzene	20	18.8	94	37-162
1634-04-4	Methyl Tert Butyl Ether	20	20.8	104	58-150
108-88-3	Toluene	20	18.4	92	47-150
1330-20-7	Xylenes (total)	60	62.5	104	68-136

CAS No.	Surrogate Recoveries	BSP	Limits
17060-07-0	1,2-Dichloroethane-D4 (SUR)	109%	76-138%
2037-26-5	Toluene-D8 (SUR)	95%	86-114%
460-00-4	4-Bromofluorobenzene (SUR)	113%	76-114%

Blank Spike Summary

Job Number: M47349
Account: EXXONSS Exxon Service Station
Project: CDM:S/S 3-5805 1425 Massachusetts Ave., Boxborough, MA

Sample	File ID	DF	Analyzed	By	Prep Date	Prep Batch	Analytical Batch
MSD2508-BS	D43555.D	1	05/25/05	AT	n/a	n/a	MSD2508

The QC reported here applies to the following samples: Method: EPA 624

M47349-3, M47349-4, M47349-5, M47349-6

CAS No.	Compound	Spike ug/l	BSP ug/l	BSP %	Limits
71-43-2	Benzene	20	16.9	85	37-151
100-41-4	Ethylbenzene	20	18.6	93	37-162
1634-04-4	Methyl Tert Butyl Ether	20	24.5	123	58-150
108-88-3	Toluene	20	17.9	90	47-150
1330-20-7	Xylenes (total)	60	72.1	120	68-136

CAS No.	Surrogate Recoveries	BSP	Limits
17060-07-0	1,2-Dichloroethane-D4 (SUR)	110%	76-138%
2037-26-5	Toluene-D8 (SUR)	95%	86-114%
460-00-4	4-Bromofluorobenzene (SUR)	100%	76-114%

Blank Spike Summary

Job Number: M47349
Account: EXXONSS Exxon Service Station
Project: CDM:S/S 3-5805 1425 Massachusetts Ave., Boxborough, MA

Sample	File ID	DF	Analyzed	By	Prep Date	Prep Batch	Analytical Batch
MSD2509-BS	D43588.D	1	05/27/05	AT	n/a	n/a	MSD2509

The QC reported here applies to the following samples: Method: EPA 624

M47349-5

CAS No.	Compound	Spike ug/l	BSP ug/l	BSP %	Limits
1634-04-4	Methyl Tert Butyl Ether	20	25.4	127	58-150

CAS No.	Surrogate Recoveries	BSP	Limits
17060-07-0	1,2-Dichloroethane-D4 (SUR)	120%	76-138%
2037-26-5	Toluene-D8 (SUR)	95%	86-114%
460-00-4	4-Bromofluorobenzene (SUR)	104%	76-114%

Matrix Spike/Matrix Spike Duplicate Summary

Job Number: M47349
Account: EXXONSS Exxon Service Station
Project: CDM:S/S 3-5805 1425 Massachusetts Ave., Boxborough, MA

Sample	File ID	DF	Analyzed	By	Prep Date	Prep Batch	Analytical Batch
M47202-18MS	D43430.D	5	05/20/05	AT	n/a	n/a	MSD2504
M47202-18MSD	D43431.D	5	05/20/05	AT	n/a	n/a	MSD2504
M47202-18	D43425.D	1	05/19/05	AT	n/a	n/a	MSD2504

The QC reported here applies to the following samples: Method: EPA 624

M47349-1, M47349-2

CAS No.	Compound	M47202-18 ug/l	Q	Spike ug/l	MS ug/l	MS %	MSD ug/l	MSD %	RPD	Limits Rec/RPD
71-43-2	Benzene	ND		100	92.5	93	92.9	93	0	37-151/30
100-41-4	Ethylbenzene	ND		100	96.0	96	97.8	98	2	37-162/30
1634-04-4	Methyl Tert Butyl Ether	ND		100	119	119	113	113	5	46-150/24
108-88-3	Toluene	ND		100	93.2	93	98.8	99	6	47-150/30
1330-20-7	Xylenes (total)	ND		300	300	100	301	100	0	66-138/28

CAS No.	Surrogate Recoveries	MS	MSD	M47202-18	Limits
17060-07-0	1,2-Dichloroethane-D4 (SUR)	119%	121%	125%	76-138%
2037-26-5	Toluene-D8 (SUR)	95%	95%	94%	86-114%
460-00-4	4-Bromofluorobenzene (SUR)	91%	109%	100%	76-114%

Matrix Spike/Matrix Spike Duplicate Summary

Job Number: M47349
Account: EXXONSS Exxon Service Station
Project: CDM:S/S 3-5805 1425 Massachusetts Ave., Boxborough, MA

Sample	File ID	DF	Analyzed	By	Prep Date	Prep Batch	Analytical Batch
M47503-6MS	D43578.D	5	05/26/05	AT	n/a	n/a	MSD2508
M47503-6MSD	D43579.D	5	05/26/05	AT	n/a	n/a	MSD2508
M47503-6	D43572.D	1	05/26/05	AT	n/a	n/a	MSD2508

The QC reported here applies to the following samples: Method: EPA 624

M47349-3, M47349-4, M47349-5, M47349-6

CAS No.	Compound	M47503-6 ug/l	Q	Spike ug/l	MS ug/l	MS %	MSD ug/l	MSD %	RPD	Limits Rec/RPD
71-43-2	Benzene	0.52		100	90.7	90	88.3	88	3	37-151/30
100-41-4	Ethylbenzene	ND		100	98.3	98	96.9	97	1	37-162/30
1634-04-4	Methyl Tert Butyl Ether	20.3		100	149	129	145	125	3	46-150/24
108-88-3	Toluene	ND		100	94.5	95	98.2	98	4	47-150/30
1330-20-7	Xylenes (total)	ND		300	328	109	348	116	6	66-138/28

CAS No.	Surrogate Recoveries	MS	MSD	M47503-6	Limits
17060-07-0	1,2-Dichloroethane-D4 (SUR)	132%	124%	128%	76-138%
2037-26-5	Toluene-D8 (SUR)	95%	96%	96%	86-114%
460-00-4	4-Bromofluorobenzene (SUR)	93%	95%	94%	76-114%

Matrix Spike/Matrix Spike Duplicate Summary

Job Number: M47349
Account: EXXONSS Exxon Service Station
Project: CDM:S/S 3-5805 1425 Massachusetts Ave., Boxborough, MA

Sample	File ID	DF	Analyzed	By	Prep Date	Prep Batch	Analytical Batch
M47648-2MS	D43597.D	5	05/27/05	AT	n/a	n/a	MSD2509
M47648-2MSD	D43598.D	5	05/27/05	AT	n/a	n/a	MSD2509
M47648-2	D43594.D	1	05/27/05	AT	n/a	n/a	MSD2509

The QC reported here applies to the following samples: Method: EPA 624

M47349-5

CAS No.	Compound	M47648-2 ug/l	Q	Spike ug/l	MS ug/l	MS %	MSD ug/l	MSD %	RPD	Limits Rec/RPD
1634-04-4	Methyl Tert Butyl Ether	8.9		100	125	116	123	114	2	46-150/24

CAS No.	Surrogate Recoveries	MS	MSD	M47648-2	Limits
17060-07-0	1,2-Dichloroethane-D4 (SUR)	124%	119%	117%	76-138%
2037-26-5	Toluene-D8 (SUR)	96%	94%	93%	86-114%
460-00-4	4-Bromofluorobenzene (SUR)	103%	106%	99%	76-114%

Volatile Surrogate Recovery Summary

Job Number: M47349
Account: EXXONSS Exxon Service Station
Project: CDM:S/S 3-5805 1425 Massachusetts Ave., Boxborough, MA

Method: EPA 624 Matrix: AQ

Samples and QC shown here apply to the above method

Lab Sample ID	Lab File ID	S1	S2	S3
M47349-1	D43435.D	103.0	95.0	96.0
M47349-1	D43426.D	130.0	89.0	98.0
M47349-2	D43414.D	120.0	94.0	98.0
M47349-3	D43565.D	126.0	94.0	97.0
M47349-4	D43566.D	125.0	101.0	94.0
M47349-5	D43591.D	121.0	95.0	85.0
M47349-5	D43567.D	124.0	96.0	92.0
M47349-6	D43582.D	121.0	88.0	98.0
M47349-6	D43568.D	127.0	93.0	98.0
M47202-18MS	D43430.D	119.0	95.0	91.0
M47202-18MSD	D43431.D	121.0	95.0	109.0
M47503-6MS	D43578.D	132.0	95.0	93.0
M47503-6MSD	D43579.D	124.0	96.0	95.0
M47648-2MS	D43597.D	124.0	96.0	103.0
M47648-2MSD	D43598.D	119.0	94.0	106.0
MSD2504-BS	D43409.D	109.0	95.0	113.0
MSD2504-MB	D43411.D	109.0	94.0	100.0
MSD2508-BS	D43555.D	110.0	95.0	100.0
MSD2508-MB	D43557.D	114.0	97.0	98.0
MSD2509-BS	D43588.D	120.0	95.0	104.0
MSD2509-MB	D43590.D	116.0	97.0	101.0

Surrogate Compounds	Recovery Limits
S1 = 1,2-Dichloroethane-D4 (SUR)	76-138%
S2 = Toluene-D8 (SUR)	86-114%
S3 = 4-Bromofluorobenzene (SUR)	76-114%

5.4

5

Metals Analysis

QC Data Summaries

Includes the following where applicable:

- Method Blank Summaries
- Matrix Spike and Duplicate Summaries
- Blank Spike and Lab Control Sample Summaries
- Serial Dilution Summaries

BLANK RESULTS SUMMARY
Part 2 - Method Blanks

Login Number: M47349
Account: EXXONSS - Exxon Service Station
Project: CDM:S/S 3-5805 1425 Massachusetts Ave., Boxborough, MA

QC Batch ID: MP7085
Matrix Type: AQUEOUS

Methods: SW846 6010B
Units: ug/l

Prep Date:				05/18/05		05/18/05
Metal	RL	IDL	MB raw	final	MB raw	final
Aluminum	200	22				
Antimony	6.0	2.4				
Arsenic	5.0	3.3				
Barium	200	.64				
Beryllium	4.0	.18				
Boron	100	1.8				
Cadmium	4.0	.22				
Calcium	5000	5.9				
Chromium	10	.72				
Cobalt	50	.69				
Copper	25	1.2				
Iron	100	20	anr			
Lead	5.0	1.2	0.28	<5.0	-0.13	<5.0
Magnesium	5000	7.7				
Manganese	15	.36				
Molybdenum	100	.48				
Nickel	40	.49				
Potassium	5000	19				
Selenium	10	1.7				
Silicon	100	11				
Silver	5.0	.12				
Sodium	5000	94				
Strontium	10	.12				
Thallium	10	3.1				
Tin	100	1.7				
Titanium	50	1.6				
Tungsten	100					
Vanadium	50	1.3				
Zinc	20	3.8				

Associated samples MP7085: M47349-1, M47349-2

Results < IDL are shown as zero for calculation purposes
(*) Outside of QC limits
(anr) Analyte not requested

MATRIX SPIKE AND DUPLICATE RESULTS SUMMARY

Login Number: M47349
Account: EXXONSS - Exxon Service Station
Project: CDM:S/S 3-5805 1425 Massachusetts Ave., Boxborough, MA

QC Batch ID: MP7085
Matrix Type: AQUEOUS

Methods: SW846 6010B
Units: ug/l

Prep Date:			05/18/05					05/18/05	
Metal	M47350-1A Original	MS	Spikelot MPIRWS2	% Rec	QC Limits	M47350-1A Original	DUP	RPD	QC Limits
Aluminum									
Antimony									
Arsenic									
Barium									
Beryllium									
Boron									
Cadmium									
Calcium									
Chromium									
Cobalt									
Copper									
Iron	anr								
Lead	0.0	940	1000	94.0	75-125	0.0	0.0	NC	0-20
Magnesium									
Manganese									
Molybdenum									
Nickel									
Potassium									
Selenium									
Silicon									
Silver									
Sodium									
Strontium									
Thallium									
Tin									
Titanium									
Tungsten									
Vanadium									
Zinc									

Associated samples MP7085: M47349-1, M47349-2

Results < IDL are shown as zero for calculation purposes
(*) Outside of QC limits
(N) Matrix Spike Rec. outside of QC limits
(anr) Analyte not requested

SPIKE BLANK AND LAB CONTROL SAMPLE SUMMARY

Login Number: M47349
Account: EXXONSS - Exxon Service Station
Project: CDM:S/S 3-5805 1425 Massachusetts Ave., Boxborough, MA

QC Batch ID: MP7085
Matrix Type: AQUEOUS

Methods: SW846 6010B
Units: ug/l

Prep Date:			05/18/05					05/18/05	
Metal	BSP Result	Spikelot MPIRWS2	% Rec	QC Limits	BSD Result	Spikelot MPIRWS2	% Rec	BSD RPD	QC Limit
Aluminum									
Antimony									
Arsenic									
Barium									
Beryllium									
Boron									
Cadmium									
Calcium									
Chromium									
Cobalt									
Copper									
Iron	anr								
Lead	915	1000	91.5	80-120	936	1000	93.6	2.3	
Magnesium									
Manganese									
Molybdenum									
Nickel									
Potassium									
Selenium									
Silicon									
Silver									
Sodium									
Strontium									
Thallium									
Tin									
Titanium									
Tungsten									
Vanadium									
Zinc									

Associated samples MP7085: M47349-1, M47349-2

Results < IDL are shown as zero for calculation purposes
(*) Outside of QC limits
(anr) Analyte not requested

SERIAL DILUTION RESULTS SUMMARY

Login Number: M47349
Account: EXXONSS - Exxon Service Station
Project: CDM:S/S 3-5805 1425 Massachusetts Ave., Boxborough, MA

QC Batch ID: MP7085
Matrix Type: AQUEOUS

Methods: SW846 6010B
Units: ug/l

Prep Date: 05/18/05

Metal	M47350-1A Original	SDL 1:5	RPD	QC Limits
Aluminum				
Antimony				
Arsenic				
Barium				
Beryllium				
Boron				
Cadmium				
Calcium				
Chromium				
Cobalt				
Copper				
Iron	anr			
Lead	0.00	0.00	NC	0-10
Magnesium				
Manganese				
Molybdenum				
Nickel				
Potassium				
Selenium				
Silicon				
Silver				
Sodium				
Strontium				
Thallium				
Tin				
Titanium				
Tungsten				
Vanadium				
Zinc				

Associated samples MP7085: M47349-1, M47349-2

Results < IDL are shown as zero for calculation purposes
(*) Outside of QC limits
(anr) Analyte not requested

BLANK RESULTS SUMMARY
Part 2 - Method Blanks

Login Number: M47349
Account: EXXONSS - Exxon Service Station
Project: CDM:S/S 3-5805 1425 Massachusetts Ave., Boxborough, MA

QC Batch ID: MP7161
Matrix Type: AQUEOUS

Methods: SW846 6010B
Units: ug/l

Prep Date: 05/27/05

Metal	RL	IDL	MB raw	final
Aluminum	200	14		
Antimony	6.0	1.6	anr	
Arsenic	5.0	2.3	anr	
Barium	200	1.7	anr	
Beryllium	4.0	.18	anr	
Boron	100	1.2		
Cadmium	4.0	.31	anr	
Calcium	5000	4.7		
Chromium	10	.53	anr	
Cobalt	50	.47		
Copper	25	2.8		
Iron	100	14	anr	
Lead	5.0	1.9	-0.61	<5.0
Magnesium	5000	5.3		
Manganese	15	.17		
Molybdenum	100	.92		
Nickel	40	.65	anr	
Potassium	5000	31		
Selenium	10	2.7	anr	
Silver	5.0	.53	anr	
Sodium	5000	110		
Strontium	10	.22		
Thallium	10	2.9	anr	
Tin	100	9.4		
Titanium	50	1.3		
Vanadium	50	2.4	anr	
Zinc	20	1.2	anr	

Associated samples MP7161: M47349-3, M47349-4, M47349-5, M47349-6

Results < IDL are shown as zero for calculation purposes
(*) Outside of QC limits
(anr) Analyte not requested

MATRIX SPIKE AND DUPLICATE RESULTS SUMMARY

Login Number: M47349
Account: EXXONSS - Exxon Service Station
Project: CDM:S/S 3-5805 1425 Massachusetts Ave., Boxborough, MA

QC Batch ID: MP7161
Matrix Type: AQUEOUS

Methods: SW846 6010B
Units: ug/l

Prep Date:				05/27/05				05/27/05	
Metal	M47435-2 Original	MS	Spikelot MPIRWS2	% Rec	QC Limits	M47435-2 Original	DUP	RPD	QC Limits
Aluminum									
Antimony	anr								
Arsenic	anr								
Barium	anr								
Beryllium	anr								
Boron									
Cadmium	anr								
Calcium									
Chromium	anr								
Cobalt									
Copper									
Iron	anr								
Lead	0.0	925	1000	92.5	75-125	0.0	0.0	NC	0-20
Magnesium									
Manganese									
Molybdenum									
Nickel	anr								
Potassium									
Selenium	anr								
Silver	anr								
Sodium									
Strontium									
Thallium	anr								
Tin									
Titanium									
Vanadium	anr								
Zinc	anr								

Associated samples MP7161: M47349-3, M47349-4, M47349-5, M47349-6

Results < IDL are shown as zero for calculation purposes
(*) Outside of QC limits
(N) Matrix Spike Rec. outside of QC limits
(anr) Analyte not requested

SPIKE BLANK AND LAB CONTROL SAMPLE SUMMARY

Login Number: M47349
Account: EXXONSS - Exxon Service Station
Project: CDM:S/S 3-5805 1425 Massachusetts Ave., Boxborough, MA

QC Batch ID: MP7161
Matrix Type: AQUEOUS

Methods: SW846 6010B
Units: ug/l

Prep Date:			05/27/05					05/27/05	
Metal	BSP Result	Spikelot MPIRWS2	% Rec	QC Limits	BSD Result	Spikelot MPIRWS2	% Rec	BSD RPD	QC Limit
Aluminum									
Antimony	anr								
Arsenic	anr								
Barium	anr								
Beryllium	anr								
Boron									
Cadmium	anr								
Calcium									
Chromium	anr								
Cobalt									
Copper									
Iron	anr								
Lead	936	1000	93.6	80-120	922	1000	92.2	1.5	
Magnesium									
Manganese									
Molybdenum									
Nickel	anr								
Potassium									
Selenium	anr								
Silver	anr								
Sodium									
Strontium									
Thallium	anr								
Tin									
Titanium									
Vanadium	anr								
Zinc	anr								

Associated samples MP7161: M47349-3, M47349-4, M47349-5, M47349-6

Results < IDL are shown as zero for calculation purposes
(*) Outside of QC limits
(anr) Analyte not requested

SERIAL DILUTION RESULTS SUMMARY

Login Number: M47349
Account: EXXONSS - Exxon Service Station
Project: CDM:S/S 3-5805 1425 Massachusetts Ave., Boxborough, MA

QC Batch ID: MP7161
Matrix Type: AQUEOUS

Methods: SW846 6010B
Units: ug/l

Prep Date: 05/27/05

Metal	M47435-2 Original	SDL 1:5	RPD	QC Limits
Aluminum				
Antimony	anr			
Arsenic	anr			
Barium	anr			
Beryllium	anr			
Boron				
Cadmium	anr			
Calcium				
Chromium	anr			
Cobalt				
Copper				
Iron	anr			
Lead	0.00	0.00	NC	0-10
Magnesium				
Manganese				
Molybdenum				
Nickel	anr			
Potassium				
Selenium	anr			
Silver	anr			
Sodium				
Strontium				
Thallium	anr			
Tin				
Titanium				
Vanadium	anr			
Zinc	anr			

Associated samples MP7161: M47349-3, M47349-4, M47349-5, M47349-6

Results < IDL are shown as zero for calculation purposes
(*) Outside of QC limits
(anr) Analyte not requested

General Chemistry

QC Data Summaries

7

Includes the following where applicable:

- Method Blank and Blank Spike Summaries
- Duplicate Summaries
- Matrix Spike Summaries

METHOD BLANK AND SPIKE RESULTS SUMMARY
GENERAL CHEMISTRY

Login Number: M47349
Account: EXXONSS - Exxon Service Station
Project: CDM:S/S 3-5805 1425 Massachusetts Ave., Boxborough, MA

Analyte	Batch ID	RL	MB Result	Units	Spike Amount	BSP Result	BSP %Recov	QC Limits
Color, Apparent	GN16762	5	<5	CU				
Petroleum Hydrocarbons	GP5560/GN16780	0.60	<0.60	mg/l	5	5.5	110.0	80-120%
Solids, Settleable	GN16760	0.10	<0.10	ml/l/hr				
Solids, Total Suspended	GN16837	4.0	<4.0	mg/l				
Turbidity	GN16761	0.50	<0.50	NTU				

Associated Samples:
Batch GN16760: M47349-1, M47349-2
Batch GN16761: M47349-1, M47349-2
Batch GN16762: M47349-1, M47349-2
Batch GN16837: M47349-1, M47349-2
Batch GP5560: M47349-1, M47349-2

7.1

7

DUPLICATE RESULTS SUMMARY
GENERAL CHEMISTRY

Login Number: M47349
Account: EXXONSS - Exxon Service Station
Project: CDM:S/S 3-5805 1425 Massachusetts Ave., Boxborough, MA

Analyte	Batch ID	QC Sample	Units	Original Result	DUP Result	RPD	QC Limits
Color, Apparent	GN16762	M47349-2	CU	<5	<5	0.0	0-20%
Petroleum Hydrocarbons	GP5560/GN16780	M47345-1	mg/l	<0.61	<0.61	0.0	0-20%
Solids, Settleable	GN16760	M47349-1	ml/l/hr	<0.10	<0.10	0.0	0-20%
Solids, Total Suspended	GN16837	M47349-2	mg/l	<4.0	<4.0	0.0	0-20%
Turbidity	GN16761	M47349-2	NTU	<0.50	<0.50	0.0	0-20%

Associated Samples:
Batch GN16760: M47349-1, M47349-2
Batch GN16761: M47349-1, M47349-2
Batch GN16762: M47349-1, M47349-2
Batch GN16837: M47349-1, M47349-2
Batch GP5560: M47349-1, M47349-2

7.2 7

MATRIX SPIKE RESULTS SUMMARY
GENERAL CHEMISTRY

Login Number: M47349
Account: EXXONSS - Exxon Service Station
Project: CDM:S/S 3-5805 1425 Massachusetts Ave., Boxborough, MA

Analyte	Batch ID	QC Sample	Units	Original Result	Spike Amount	MS Result	%Rec	QC Limits
Petroleum Hydrocarbons	GP5560/GN16780	M47349-2	mg/l	<0.61	5.1	5.5	107.8	75-125%

Associated Samples:
Batch GP5560: M47349-1, M47349-2

7.3

7

New England
ACCUTEST.
Laboratories

06/10/05

Technical Report for

Exxon Service Station

CDM:S/S 3-5805 1425 Massachusetts Ave., Boxborough, MA

PO#4506003635 WBS#08

Accutest Job Number: M47799

Sampling Date: 06/01/05

Report to:

Camp Dresser & McKee
50 Hampshire Avenue
Cambridge, MA 02139

ATTN: Jon Welch

Total number of pages in report: 30

ACCREDITED IN ACCORDANCE WITH nelac

Test results contained within this data package meet the requirements of the National Environmental Laboratory Accreditation Conference and/or state specific certification programs as applicable.

Reza Pand
Lab Director

Certifications: MA (M-MA136) CT (PH-0109) NH (250204) RI (00071) ME (MA136) FL (E87579) NY (23346) NJ (MA926) NAVY USACE

This report shall not be reproduced, except in its entirety, without the written approval of Accutest Laboratories.

ACCUTEST Laboratories

SAMPLE DELIVERY GROUP CASE NARRATIVE

Client: Exxon Service Station **Job No:** M47799

Site: CDM:S/S 3-5805 1425 Massachusetts Ave., Boxborough, MA **Report Date** 6/10/2005 4:00:22 PM

2 Samples were collected on 06/01/2005 and were received at Accutest on 06/02/2005 properly preserved, at 3.4 Deg. C and intact. These Samples received an Accutest job number of M47799. A listing of the Laboratory Sample ID, Client Sample ID and dates of collection are presented in the Results Summary Section of this report.

Except as noted below, all method specified calibrations and quality control performance criteria were met for this job. For more information, please refer to QC summary pages.

Volatiles by GCMS By Method EPA 624

Matrix: AQ **Batch ID:** MSD2515

- All samples were analyzed within the recommended method holding time.
- All method blanks for this batch meet method specific criteria.
- Sample(s) M47846-2MS, M47846-2MSD were used as the QC samples indicated.
- Only BTX and MTBE requested.

Metals By Method SW846 6010B

Matrix: AQ **Batch ID:** MP7201

- All samples were digested within the recommended method holding time.
- All samples were analyzed within the recommended method holding time.
- All method blanks for this batch meet method specific criteria.
- Sample(s) M47696-1AMS, M47696-1ASDL, M47696-1ADUP were used as the QC samples for metals.
- RPD(s) for Duplicate for Lead are outside control limits for sample MP7201-D1. RPD acceptable due to low duplicate and sample concentrations.

Wet Chemistry By Method EPA 110.2

Matrix: AQ **Batch ID:** GN16941

- All samples were analyzed within the recommended method holding time.
- All method blanks for this batch meet method specific criteria.
- Sample(s) M47799-2DUP were used as the QC samples for Color, Apparent.
- M47799-2 for Color, Apparent: pH at the time of analysis, 8.63.
- M47799-1 for Color, Apparent: pH at the time of analysis, 6.64.

Wet Chemistry By Method EPA 160.2

Matrix: AQ **Batch ID:** GN16956

- All samples were analyzed within the recommended method holding time.
- All method blanks for this batch meet method specific criteria.
- Sample(s) M47799-2DUP were used as the QC samples for Solids, Total Suspended.

Wet Chemistry By Method EPA 160.5

Matrix: AQ	Batch ID: GN16942

- All samples were analyzed within the recommended method holding time.
- All method blanks for this batch meet method specific criteria.
- Sample(s) M47799-2DUP were used as the QC samples for Solids, Settleable.

Wet Chemistry By Method EPA 180.1

Matrix: AQ	Batch ID: GN16943

- All samples were analyzed within the recommended method holding time.
- All method blanks for this batch meet method specific criteria.
- Sample(s) M47799-2DUP were used as the QC samples for Turbidity.

Wet Chemistry By Method EPA 418.1

Matrix: AQ	Batch ID: GP5627

- All samples were distilled within the recommended method holding time.
- All samples were analyzed within the recommended method holding time.
- All method blanks for this batch meet method specific criteria.
- Sample(s) M47846-1DUP, M47846-4MS were used as the QC samples for Petroleum Hydrocarbons.

The Accutest Laboratories of New England certifies that all analysis were performed within method specification. It is further recommended that this report to be used in its entirety.The Accutest Laboratories of NE, Laboratory Director or assignee as verified by the signature on the cover page has authorized the release of this report(M47799).

Title: MADEP MCP Response Action Analytical Report Certification Form

MADEP MCP Analytical Method Report Certification Form

Laboratory Name:	Accutest Laboratories of New England	Project #:	M47799
Project Location:	CDM:S/S 3-5805 1425 Massachusetts Ave., Boxborough, MA	MADEP RTN [1]	None

This form provides certifications for the following data set:
M47799-1,M47799-2

Test Method:EPA 624, 110.2, 160.2, 160.5, 180.1, 418.1, and below

Sample Matrices:	Groundwater X	Soil/Sediment ( )	Drinking Water ( )	Other: ( )	( )
MCP SW-846	8260B ( )	8151A ( )	8330 ( )	6010B (X)	7470A/1A ( )
Methods Used	8270C ( )	8081A ( )	VPH ( )	6020 ( )	9014M [2] ( )
As specified in MADEP Compendium of Analytical Methods (Check all that apply)	8082 ( )	8021B ( )	EPH ( )	7000 S [3] ( )	7196A ( )

[1] List Release Tracking Number (RTN) Unknown
[2] M - SW-846 Method 9014 for MADEP Physiologically Available Cyanide (PAC) Method
[3] S - SW-846 Methods 7000 Series - List individual method and analyte

An affirmative response to questions A, B, C, and D is required for "Presumptive Certainty status

A	Were all samples received by the laboratory in a condition consistent with that described on the Chain-of-Custody documentation for the data set?	☑	Yes	☐ No [1]
B	Were all QA/QC procedures required for the specified analytical method(s) included in this report followed, including the requirement to note and discuss in a narrative QC data that did not meet appropriate performance standards or guidelines?	☑	Yes	☐ No [1]
C	Does the data included in this report meet all the analytical requirements for "Presumptive Certainty", as described in Section 2.0 (a), (b), (c) and (d) of the MADEP document CAM VII A, "Quality Assurance and Quality Control Guidelines for the Acquisition and Reporting of Analytical Data"?	☑	Yes	☐ No [1]
D	**VPH and EPH methods only:** Was the VPH or EPH method run without significant modifications, as specified in Section 11.3?	☑	Yes	☐ No [1]

A response to questions E and F below is required for "Presumptive Certainty" status

E	Were all QC performance standards and recommendations for the specified methods achieved?	☑ Refer to Narrative	Yes	☐ No [1]
F	Were results for all analyte-list compounds/elements for the specified method(s) reported?	☐ Refer to Narrative	Yes	☑ No [1]

[1] ***All Negative responses must be addressed in an attached Environmental Laboratory case narrative.***

I the undersigned, attest under the pains and penalties of perjury that, based upon my personal inquiry of those responsible for obtaining the information, the material contained in this analytical report is, to the best of my knowledge and belief, accurate and complete.

Signature: [signature] **Position:** Laboratory Director

Printed Name: Reza Tand **Date:** 06/10/2005

Sample Summary

Exxon Service Station

Job No: M47799

CDM:S/S 3-5805 1425 Massachusetts Ave., Boxborough, MA
Project No: PO#4506003635 WBS#08

Sample Number	Collected Date	Time By	Received	Matrix Code	Type	Client Sample ID
M47799-1	06/01/05	15:15 TAN	06/02/05	AQ	Ground Water	INF-GW-6105
M47799-2	06/01/05	15:35 TAN	06/02/05	AQ	Ground Water	EFF-GW-6105

Report of Analysis

Client Sample ID:	INF-GW-6105		
Lab Sample ID:	M47799-1	**Date Sampled:**	06/01/05
Matrix:	AQ - Ground Water	**Date Received:**	06/02/05
Method:	EPA 624	**Percent Solids:**	n/a
Project:	CDM:S/S 3-5805 1425 Massachusetts Ave., Boxborough, MA		

	File ID	DF	Analyzed	By	Prep Date	Prep Batch	Analytical Batch
Run #1	D43731.D	1	06/04/05	AT	n/a	n/a	MSD2515
Run #2	D43746.D	20	06/05/05	AT	n/a	n/a	MSD2515

	Purge Volume
Run #1	5.0 ml
Run #2	5.0 ml

Purgeable Aromatics, MTBE

CAS No.	Compound	Result	RL	Units	Q
71-43-2	Benzene	3.6	0.50	ug/l	
108-88-3	Toluene	29.4	1.0	ug/l	
100-41-4	Ethylbenzene	70.4	1.0	ug/l	
1330-20-7	Xylenes (total)	245	1.0	ug/l	
1634-04-4	Methyl Tert Butyl Ether	3040 [a]	20	ug/l	

CAS No.	Surrogate Recoveries	Run# 1	Run# 2	Limits
17060-07-0	1,2-Dichloroethane-D4 (SUR)	112%	119%	76-138%
2037-26-5	Toluene-D8 (SUR)	95%	91%	86-114%
460-00-4	4-Bromofluorobenzene (SUR)	110%	106%	76-114%

(a) Result is from Run# 2

ND = Not detected
RL = Reporting Limit
E = Indicates value exceeds calibration range

J = Indicates an estimated value
B = Indicates analyte found in associated method blank
N = Indicates presumptive evidence of a compound

GC/MS Volatiles

QC Data Summaries

Includes the following where applicable:

- Method Blank Summaries
- Blank Spike Summaries
- Matrix Spike and Duplicate Summaries
- Surrogate Recovery Summaries

Method Blank Summary

Job Number: M47799
Account: EXXONSS Exxon Service Station
Project: CDM:S/S 3-5805 1425 Massachusetts Ave., Boxborough, MA

Sample	File ID	DF	Analyzed	By	Prep Date	Prep Batch	Analytical Batch
MSD2515-MB	D43728.D	1	06/04/05	AT	n/a	n/a	MSD2515

The QC reported here applies to the following samples: **Method:** EPA 624

M47799-1, M47799-2

CAS No.	Compound	Result	RL	Units	Q
71-43-2	Benzene	ND	0.50	ug/l	
100-41-4	Ethylbenzene	ND	1.0	ug/l	
1634-04-4	Methyl Tert Butyl Ether	ND	1.0	ug/l	
108-88-3	Toluene	ND	1.0	ug/l	
1330-20-7	Xylenes (total)	ND	1.0	ug/l	

CAS No.	Surrogate Recoveries		Limits
17060-07-0	1,2-Dichloroethane-D4 (SUR)	105%	76-138%
2037-26-5	Toluene-D8 (SUR)	95%	86-114%
460-00-4	4-Bromofluorobenzene (SUR)	107%	76-114%

Accutest Laboratories

Report of Analysis

Client Sample ID:	INF-GW-6105		
Lab Sample ID:	M47799-1	**Date Sampled:**	06/01/05
Matrix:	AQ - Ground Water	**Date Received:**	06/02/05
		Percent Solids:	n/a
Project:	CDM:S/S 3-5805 1425 Massachusetts Ave., Boxborough, MA		

Metals Analysis

Analyte	Result	RL	Units	DF	Prep	Analyzed By		Method	Prep Method
Lead	6.3	5.0	ug/l	1	06/06/05	06/09/05	AC	SW846 6010B [1]	SW846 3010A [2]

(1) Instrument QC Batch: MA5939
(2) Prep QC Batch: MP7201

RL = Reporting Limit

Accutest Laboratories

Report of Analysis

Client Sample ID:	INF-GW-6105		
Lab Sample ID:	M47799-1	**Date Sampled:**	06/01/05
Matrix:	AQ - Ground Water	**Date Received:**	06/02/05
		Percent Solids:	n/a
Project:	CDM:S/S 3-5805 1425 Massachusetts Ave., Boxborough, MA		

General Chemistry

Analyte	Result	RL	Units	DF	Analyzed	By	Method
Color, Apparent [a]	25	5	CU	1	06/02/05 17:10	MA	EPA 110.2
Petroleum Hydrocarbons	<0.61	0.61	mg/l	1	06/07/05	BF	EPA 418.1
Solids, Settleable	<0.10	0.10	ml/l/hr	1	06/02/05 18:05	MA	EPA 160.5
Solids, Total Suspended	7.0	4.0	mg/l	1	06/06/05	BF	EPA 160.2
Turbidity	8.4	0.50	NTU	1	06/02/05 17:20	MA	EPA 180.1

(a) pH at the time of analysis, 6.64.

RL = Reporting Limit

Blank Spike Summary

Job Number: M47799
Account: EXXONSS Exxon Service Station
Project: CDM:S/S 3-5805 1425 Massachusetts Ave., Boxborough, MA

Sample	File ID	DF	Analyzed	By	Prep Date	Prep Batch	Analytical Batch
MSD2515-BS	D43725.D	1	06/04/05	AT	n/a	n/a	MSD2515

The QC reported here applies to the following samples: **Method:** EPA 624

M47799-1, M47799-2

CAS No.	Compound	Spike ug/l	BSP ug/l	BSP %	Limits
71-43-2	Benzene	20	10.5	53	37-151
100-41-4	Ethylbenzene	20	19.8	99	37-162
1634-04-4	Methyl Tert Butyl Ether	20	25.7	129	58-150
108-88-3	Toluene	20	17.5	88	47-150
1330-20-7	Xylenes (total)	60	72.6	121	68-136

CAS No.	Surrogate Recoveries	BSP	Limits
17060-07-0	1,2-Dichloroethane-D4 (SUR)	108%	76-138%
2037-26-5	Toluene-D8 (SUR)	94%	86-114%
460-00-4	4-Bromofluorobenzene (SUR)	105%	76-114%

Matrix Spike/Matrix Spike Duplicate Summary

Job Number: M47799
Account: EXXONSS Exxon Service Station
Project: CDM:S/S 3-5805 1425 Massachusetts Ave., Boxborough, MA

Sample	File ID	DF	Analyzed	By	Prep Date	Prep Batch	Analytical Batch
M47846-2MS	D43743.D	5	06/05/05	AT	n/a	n/a	MSD2515
M47846-2MSD	D43744.D	5	06/05/05	AT	n/a	n/a	MSD2515
M47846-2	D43739.D	1	06/05/05	AT	n/a	n/a	MSD2515

The QC reported here applies to the following samples: **Method:** EPA 624

M47799-1, M47799-2

CAS No.	Compound	M47846-2 ug/l	Q	Spike ug/l	MS ug/l	MS %	MSD ug/l	MSD %	RPD	Limits Rec/RPD
71-43-2	Benzene	10		100	54.4	44	53.1	43	2	37-151/30
100-41-4	Ethylbenzene	5.6		100	92.9	87	92.0	86	1	37-162/30
1634-04-4	Methyl Tert Butyl Ether	5.9		100	143	137	140	134	2	46-150/24
108-88-3	Toluene	10.2		100	80.7	71	80.0	70	1	47-150/30
1330-20-7	Xylenes (total)	62.3		300	428	122	417	118	3	66-138/28

CAS No.	Surrogate Recoveries	MS	MSD	M47846-2	Limits
17060-07-0	1,2-Dichloroethane-D4 (SUR)	120%	115%	118%	76-138%
2037-26-5	Toluene-D8 (SUR)	92%	93%	92%	86-114%
460-00-4	4-Bromofluorobenzene (SUR)	107%	102%	111%	76-114%

Volatile Surrogate Recovery Summary

Job Number: M47799
Account: EXXONSS Exxon Service Station
Project: CDM:S/S 3-5805 1425 Massachusetts Ave., Boxborough, MA

Method: EPA 624 **Matrix:** AQ

Samples and QC shown here apply to the above method

Lab Sample ID	Lab File ID	S1	S2	S3
M47799-1	D43746.D	119.0	91.0	106.0
M47799-1	D43731.D	112.0	95.0	110.0
M47799-2	D43732.D	112.0	95.0	107.0
M47846-2MS	D43743.D	120.0	92.0	107.0
M47846-2MSD	D43744.D	115.0	93.0	102.0
MSD2515-BS	D43725.D	108.0	94.0	105.0
MSD2515-MB	D43728.D	105.0	95.0	107.0

Surrogate Compounds	Recovery Limits
S1 = 1,2-Dichloroethane-D4 (SUR)	76-138%
S2 = Toluene-D8 (SUR)	86-114%
S3 = 4-Bromofluorobenzene (SUR)	76-114%

Metals Analysis

QC Data Summaries

Includes the following where applicable:

- Method Blank Summaries
- Matrix Spike and Duplicate Summaries
- Blank Spike and Lab Control Sample Summaries
- Serial Dilution Summaries

BLANK RESULTS SUMMARY
Part 2 - Method Blanks

Login Number: M47799
Account: EXXONSS - Exxon Service Station
Project: CDM:S/S 3-5805 1425 Massachusetts Ave., Boxborough, MA

QC Batch ID: MP7201
Matrix Type: AQUEOUS

Methods: SW846 6010B
Units: ug/l

Prep Date:				06/06/05		06/06/05
Metal	RL	IDL	MB raw	final	MB raw	final
Aluminum	200	22				
Antimony	6.0	2.4				
Arsenic	5.0	3.3	anr			
Barium	200	.64	anr			
Beryllium	4.0	.18				
Boron	100	1.8				
Cadmium	4.0	.22	anr			
Calcium	5000	5.9				
Chromium	10	.72	anr			
Cobalt	50	.69				
Copper	25	1.2				
Iron	100	20	anr			
Lead	5.0	1.2	0.83	<5.0	0.42	<5.0
Magnesium	5000	7.7				
Manganese	15	.36				
Molybdenum	100	.48				
Nickel	40	.49				
Potassium	5000	19				
Selenium	10	1.7	anr			
Silver	5.0	.12	anr			
Sodium	5000	94				
Strontium	10	.12				
Thallium	10	3.1				
Tin	100	1.7				
Titanium	50	1.6				
Tungsten	100					
Vanadium	50	1.3				
Zinc	20	3.8				

Associated samples MP7201: M47799-1, M47799-2

Results < IDL are shown as zero for calculation purposes
(*) Outside of QC limits
(anr) Analyte not requested

MATRIX SPIKE AND DUPLICATE RESULTS SUMMARY

Login Number: M47799
Account: EXXONSS - Exxon Service Station
Project: CDM:S/S 3-5805 1425 Massachusetts Ave., Boxborough, MA

QC Batch ID: MP7201
Matrix Type: AQUEOUS

Methods: SW846 6010B
Units: ug/l

Prep Date:			06/06/05					06/06/05	
Metal	M47696-1A Original MS		Spikelot MPIRWS2	% Rec	QC Limits	M47696-1A Original DUP		RPD	QC Limits
Aluminum									
Antimony									
Arsenic	anr								
Barium	anr								
Beryllium									
Boron									
Cadmium	anr								
Calcium									
Chromium	anr								
Cobalt									
Copper									
Iron	anr								
Lead	0.0	993	1000	99.3	75-125	0.0	2.2	200.0(a)	0-20
Magnesium									
Manganese									
Molybdenum									
Nickel									
Potassium									
Selenium	anr								
Silver	anr								
Sodium									
Strontium									
Thallium									
Tin									
Titanium									
Tungsten									
Vanadium									
Zinc									

Associated samples MP7201: M47799-1, M47799-2

Results < IDL are shown as zero for calculation purposes
(*) Outside of QC limits
(N) Matrix Spike Rec. outside of QC limits
(anr) Analyte not requested
(a) RPD acceptable due to low duplicate and sample concentrations.

SPIKE BLANK AND LAB CONTROL SAMPLE SUMMARY

Login Number: M47799
Account: EXXONSS - Exxon Service Station
Project: CDM:S/S 3-5805 1425 Massachusetts Ave., Boxborough, MA

QC Batch ID: MP7201
Matrix Type: AQUEOUS

Methods: SW846 6010B
Units: ug/l

Prep Date:			06/06/05					06/06/05	
Metal	BSP Result	Spikelot MPIRWS2	% Rec	QC Limits	BSD Result	Spikelot MPIRWS2	% Rec	BSD RPD	QC Limit
Aluminum									
Antimony									
Arsenic	anr								
Barium	anr								
Beryllium									
Boron									
Cadmium	anr								
Calcium									
Chromium	anr								
Cobalt									
Copper									
Iron	anr								
Lead	984	1000	98.4	80-120	985	1000	98.5	0.1	
Magnesium									
Manganese									
Molybdenum									
Nickel									
Potassium									
Selenium	anr								
Silver	anr								
Sodium									
Strontium									
Thallium									
Tin									
Titanium									
Tungsten									
Vanadium									
Zinc									

Associated samples MP7201: M47799-1, M47799-2

Results < IDL are shown as zero for calculation purposes
(*) Outside of QC limits
(anr) Analyte not requested

SERIAL DILUTION RESULTS SUMMARY

Login Number: M47799
Account: EXXONSS - Exxon Service Station
Project: CDM:S/S 3-5805 1425 Massachusetts Ave., Boxborough, MA

QC Batch ID: MP7201
Matrix Type: AQUEOUS

Methods: SW846 6010B
Units: ug/l

Prep Date: 06/06/05

Metal	M47696-1A Original	SDL 1:5	RPD	QC Limits
Aluminum				
Antimony				
Arsenic	anr			
Barium	anr			
Beryllium				
Boron				
Cadmium	anr			
Calcium				
Chromium	anr			
Cobalt				
Copper				
Iron	anr			
Lead	0.00	8.87		0-10
Magnesium				
Manganese				
Molybdenum				
Nickel				
Potassium				
Selenium	anr			
Silver	anr			
Sodium				
Strontium				
Thallium				
Tin				
Titanium				
Tungsten				
Vanadium				
Zinc				

Associated samples MP7201: M47799-1, M47799-2

Results < IDL are shown as zero for calculation purposes
(*) Outside of QC limits
(anr) Analyte not requested

General Chemistry

QC Data Summaries

Includes the following where applicable:

- Method Blank and Blank Spike Summaries
- Duplicate Summaries
- Matrix Spike Summaries

METHOD BLANK AND SPIKE RESULTS SUMMARY
GENERAL CHEMISTRY

Login Number: M47799
Account: EXXONSS - Exxon Service Station
Project: CDM:S/S 3-5805 1425 Massachusetts Ave., Boxborough, MA

Analyte	Batch ID	RL	MB Result	Units	Spike Amount	BSP Result	BSP %Recov	QC Limits
Color, Apparent	GN16941	5	<5	CU				
Petroleum Hydrocarbons	GP5627/GN16974	0.60	<0.60	mg/l	5	5.1	102.0	80-120%
Solids, Settleable	GN16942	0.10	<0.10	ml/l/hr				
Solids, Total Suspended	GN16956	4.0	<4.0	mg/l				
Turbidity	GN16943	0.50	<0.50	NTU				

Associated Samples:
Batch GN16941: M47799-1, M47799-2
Batch GN16942: M47799-1, M47799-2
Batch GN16943: M47799-1, M47799-2
Batch GN16956: M47799-1, M47799-2
Batch GP5627: M47799-1, M47799-2

DUPLICATE RESULTS SUMMARY
GENERAL CHEMISTRY

Login Number: M47799
Account: EXXONSS - Exxon Service Station
Project: CDM:S/S 3-5805 1425 Massachusetts Ave., Boxborough, MA

Analyte	Batch ID	QC Sample	Units	Original Result	DUP Result	RPD	QC Limits
Color, Apparent	GN16941	M47799-2	CU	<5	<5	0.0	0-20%
Petroleum Hydrocarbons	GP5627/GN16974	M47846-1	mg/l	0.68	0.68	0.0	0-20%
Solids, Settleable	GN16942	M47799-2	ml/l/hr	<0.10	<0.10	0.0	0-20%
Solids, Total Suspended	GN16956	M47799-2	mg/l	<4.0	<4.0	0.0	0-20%
Turbidity	GN16943	M47799-2	NTU	<0.50	<0.50	0.0	0-20%

Associated Samples:
Batch GN16941: M47799-1, M47799-2
Batch GN16942: M47799-1, M47799-2
Batch GN16943: M47799-1, M47799-2
Batch GN16956: M47799-1, M47799-2
Batch GP5627: M47799-1, M47799-2

MATRIX SPIKE RESULTS SUMMARY
GENERAL CHEMISTRY

Login Number: M47799
Account: EXXONSS - Exxon Service Station
Project: CDM:S/S 3-5805 1425 Massachusetts Ave., Boxborough, MA

Analyte	Batch ID	QC Sample	Units	Original Result	Spike Amount	MS Result	%Rec	QC Limits
Petroleum Hydrocarbons	GP5627/GN16974	M47846-4	mg/l	<0.61	5.1	4.8	94.1	75-125%

Associated Samples:
Batch GP5627: M47799-1, M47799-2

Misc. Forms

Custody Documents and Other Forms

Includes the following where applicable:

- Sample Tracking Chronicle

Internal Sample Tracking Chronicle

Exxon Service Station

Job No: M47799

CDM:S/S 3-5805 1425 Massachusetts Ave., Boxborough, MA
Project No: PO#4506003635 WBS#08

Sample Number	Method	Analyzed	By	Prepped	By	Test Codes
M47799-1 Collected: 01-JUN-05 15:15 By: TAN Received: 02-JUN-05 By: SAP INF-GW-6105						
M47799-1	EPA 110.2	02-JUN-05 17:10	MA			COL
M47799-1	EPA 180.1	02-JUN-05 17:20	MA			TURB
M47799-1	EPA 160.5	02-JUN-05 18:05	MA			SS
M47799-1	EPA 624	04-JUN-05 19:22	AT			V624BTXM
M47799-1	EPA 624	05-JUN-05 11:26	AT			V624BTXM
M47799-1	EPA 160.2	06-JUN-05	BF			TSS
M47799-1	EPA 418.1	07-JUN-05	BF	07-JUN-05	BF	PHC
M47799-1	SW846 6010B	09-JUN-05 12:34	AC	06-JUN-05	OP	PB
M47799-2 Collected: 01-JUN-05 15:35 By: TAN Received: 02-JUN-05 By: SAP EFF-GW-6105						
M47799-2	EPA 110.2	02-JUN-05 17:10	MA			COL
M47799-2	EPA 180.1	02-JUN-05 17:20	MA			TURB
M47799-2	EPA 160.5	02-JUN-05 18:05	MA			SS
M47799-2	EPA 624	04-JUN-05 19:59	AT			V624BTXM
M47799-2	EPA 160.2	06-JUN-05	BF			TSS
M47799-2	EPA 418.1	07-JUN-05	BF	07-JUN-05	BF	PHC
M47799-2	SW846 6010B	09-JUN-05 12:40	AC	06-JUN-05	OP	PB

Betty Baer

From: Betty Baer
Sent: Thursday, June 02, 2005 6:51 PM
To: 'welchje@cdm.com'
Subject: XOM Boxborough

We rec'd a Chain for this site 6/2/05, two GW samples MCP INF-GW-6105 and EFF-GW-6105, what are the total metals that are needed, this is a 5 day rush.

Betty

Betty Baer
Accutest Laboratories
495 Technology Center West, Building #1
Marlboro, MA 01752

Phone (508) 481- 6200
Fax (508) 481-7753

Betty Baer

From: Welch, Jonathan [WelchJE@cdm.com]
Sent: Monday, June 06, 2005 9:19 AM
To: Betty Baer
Subject: RE: XOM Boxborough

Lead only

From: Betty Baer [mailto:bettyb@accutest.com]
Sent: Thursday, June 02, 2005 6:51 PM
To: Welch, Jonathan
Subject: XOM Boxborough

We rec'd a Chain for this site 6/2/05, two GW samples MCP INF-GW-6105 and EFF-GW-6105, what are the total metals that are needed, this is a 5 day rush.

Betty

Betty Baer

Accutest Laboratories

495 Technology Center West, Building #1

Marlboro, MA 01752

Phone (508) 481- 6200

Fax (508) 481-7753

ACCUTEST. Laboratories

CHAIN OF CUSTODY

495 Tech Center West, Bldg. 1
Marlboro, MA 01752
508-481-6200 FAX: 508-481-6200

11F1

Accutest Job #: M47799

Client Information | **Facility Information**

EXXONMOBIL CORPORATION - Regional Laboratory Program Northeast

Consultants Company Name: CO M	Project Name: BOXBOROUGH EXXON
Address: 60 HAMPSHIRE ST	Street: 425 MASS AVE
City: CAMBRIDGE State: ST Zip:	City: BOXBOROUGH State: MA
Project Contact: JON WEUCH	ExxonMobil Contact: ERIC FERRICO
Sampler's Name: T. NAWN	ExxonMobil Contact Phone #: 617-381-2952
Phone #: 617-452-6332 Ext. Fax #:	Location ID#: 3-5805 WBS#
AFE #:	PO# Line#

Analytical Information

Accutest Sample #	Field ID / Point of Collection	Collection Date	Collection Time	Sampled by	Matrix	# of bottles	Preservation HCL	NaOH	HNO3	H2SO4	MEOH	Encore	Other	None	BTEX 8260 ☐ 624 ☐ 8021 ☐ 524 ☐ MTBE ☐ TBA ☐ Naphthalene ☐ Oxygenates ☐	VOC AQUEOUS 8260 ☐ 624 ☐ 524 ☐ STD ☐ TCL ☐ PPL ☐ MTBE ☐ TBA ☐ Oxygenates ☐	VOC SOIL 8260 ☐ STD ☐ TCL ☐ PPL ☐ MTBE ☐ TBA ☐ Oxygenates ☐ 5035/LOW ☐ 5035MED ☐	VPH RANGES ☐ TARGETS ☐	EPH RANGES ☐ TARGET (PAH) ☐ DIESEL (PAH) ☐	TPH-CTDEP ☐ TPH418.1 ☐	TPH-MAINE GRO ☐ DRO ☐	TPH-8015 GRO ☐ TPH-8015 DRO ☐	METALS TOTAL ☐ DISSOLVED ☐ HM8 ☐ HM5 ☐	METALS TCLP ☐ SPLP ☐ HM8 ☐ HM5 ☐	TSS/TURBIDITY	TOTAL SETTLEABLE SOLIDS
-1	INF-GW-6105	6-1-05	15:15	TAN	GW	8	X		X					X	X					X			X		X	X
-2	EFF-GW-6105	6-1-05	15:35	TAN	GW	8	X		X					X	X					X			X		X	X

30

Turnaround Time (Business days)

- ☐ Std. 10 Business Days
- ☐ 8 Day RUSH
- ☒ 5 Day RUSH [redacted]
- ☐ 3 Day *EMERGENCY*
- ☐ 2 Day *EMERGENCY*
- ☐ 1 Day EMERGENCY

Approved By:/Date: T. NAWN

Emergency T/A is for FAX or Lablink Data

Data Deliverable Information

- ☐ Commercial "A"
- ☐ Commercial "B"
- ☐ Full Deliverables
- ☐ Other
- ☐ FULL CLP
- ☐ State Forms
- ☐ Disk Deliverable Format _____

Site Specific: QC Yes ☐ No ☐ If yes, indicate QC sample in Comments and submit triplicate volume.

Comments / Remarks

MCP-PRESUMPTIVE CERTAINTY
LIMITS BELOW GW-1 STANDARDS

Loc 2A, 6B, 4C, 2F5

Sample Custody must be documented below each time samples change possession, including courier delivery.

Relinquished by Sampler	Date Time	Received by	Relinquished by	Date Time	Received by
1 T. Nawn	6-1-05 15:10	1 [signature]	2		2
Relinquished by: 3	Date Time:	Received by: 3	Relinquished by: 4	Date Time:	Received by: 4
Relinquished by: 5	Date Time:	Received by:	Seal #	Preserved where applicable	On Ice Temp

New England ACCUTEST Laboratories

06/21/05

Technical Report for

Exxon Service Station

CDM:S/S 3-5805 1425 Massachusetts Ave., Boxborough, MA

PO#4506003635 WBS#08

Accutest Job Number: M48312

Sampling Date: 06/17/05

Report to:

Camp Dresser & McKee
50 Hampshire Avenue
Cambridge, MA 02139

ATTN: Jon Welch

Total number of pages in report: 8

Accredited in accordance with nelac

Test results contained within this data package meet the requirements of the National Environmental Laboratory Accreditation Conference and/or state specific certification programs as applicable.

Reza Pand
Lab Director

Certifications: MA (M-MA136) CT (PH-0109) NH (250204) RI (00071) ME (MA136) FL (E87579) NY (23346) NJ (MA926) NAVY USACE

This report shall not be reproduced, except in its entirety, without the written approval of Accutest Laboratories.

Sample Summary

Exxon Service Station

CDM:S/S 3-5805 1425 Massachusetts Ave., Boxborough, MA
Project No: PO#4506003635 WBS#08

Job No: M48312

Sample Number	Collected Date	Collected Time By	Received	Matrix Code	Matrix Type	Client Sample ID
M48312-1	06/17/05	08:45 TAN	06/17/05	AQ	Influent	INF-GW-61705
M48312-2	06/17/05	08:50 TAN	06/17/05	AQ	Influent	INF-AS-GW-61705
M48312-3	06/17/05	08:55 TAN	06/17/05	AQ	Effluent1	EFF-AS-GW-61705
M48312-4	06/17/05	09:00 TAN	06/17/05	AQ	Effluent2	GAC1-EFF-GW-61705
M48312-5	06/17/05	09:05 TAN	06/17/05	AQ	Effluent3	GAC2-EFF-GW-61705

Accutest Laboratories

Report of Analysis

Client Sample ID:	INF-GW-61705		
Lab Sample ID:	M48312-1	**Date Sampled:**	06/17/05
Matrix:	AQ - Influent	**Date Received:**	06/17/05
		Percent Solids:	n/a
Project:	CDM:S/S 3-5805 1425 Massachusetts Ave., Boxborough, MA		

Metals Analysis

Analyte	Result	RL	Units	DF	Prep	Analyzed By		Method	Prep Method
Lead	<5.0	5.0	ug/l	1	06/20/05	06/21/05	HBM	SW846 6010B [1]	SW846 3010A [2]

(1) Instrument QC Batch: MA5966
(2) Prep QC Batch: MP7267

RL = Reporting Limit

ACCUTEST Laboratories

495 Tech Center West, Bldg. 1
Marlboro, MA 01752
508-481-6200 FAX: 508-481-6200

Accutest Job #: M48312

Client Information | **Facility Information**

EXXONMOBIL CORPORATION - Regional Laboratory Program Northeast

Consultants Company Name: CDM	Project Name: Boxborough/Exxon
Address: 50 Hampshire Street	Street: 1425 Mass Ave
City: Cambridge State: MA Zip: 02139	City: Boxborough State: MA
Project Contact: Jon Welch	ExxonMobil Contact: Eric Errico
Sampler's Name: Ted Nawn	ExxonMobil Contact Phone #: 617-381-2952
Phone #: 617-452-6332 Ext. Fax #:	Location ID#: 35805 WBS#
AFE #:	PO# Line#

Analytical Information

Accutest Sample #	Field ID / Point of Collection	Collection Date	Collection Time	Sampled by	Matrix	# of bottles	Preservation HCL	NaOH	HNO3	H2SO4	MEOH	Encore	Other	None	BTEX 8260 ☐ 624 ☐ 8021 ☐ 524 ☐ MTBE ☐ TBA ☐ Naphthalene ☐ Oxygenates ☐	VOC AQUEOUS 8260 ☐ 624 ☐ 524 ☐ STD ☐ TCL ☐ PPL ☐ MTBE ☐ TBA ☐ Oxygenates ☐	VOC SOIL 8260 ☐ STD ☐ TCL ☐ PPL ☐ MTBE ☐ TBA ☐ Oxygenates ☐ 5035/LOW ☐ 5035MED ☐	VPH RANGES ☐ TARGETS ☐	EPH RANGES ☐ TARGET (PAH) ☐ DIESEL (PAH) ☐	TPH-CTDEP ☐ TPH418.1 ☐	TPH-MAINE GRO ☐ DRO ☐	TPH-8015 GRO ☐ TPH-8015 DRO ☐	METALS TOTAL ☐ DISSOLVED ☐ HM8 ☐ HM5 ☐	METALS TCLP ☐ SPLP ☐ HM8 ☐ HM5 ☐	Total Lead
-1	INF-GW-61705	6/17/05	8:45	TAN	GW	1			X																X
-2	INF-AS-GW-61705		8:50	TAN	GW	1			X																X
-3	EFF-AS-GW-61705		8:55	TAN	GW	1			X																X
-4	GAC1-EFF-GW-61705		9:00	TAN	GW	1			X																X
-5	GAC2-EFF-GW-61705		9:05	TAN	GW	1			X																X

Turnaround Time (Business days)

- ☐ Std. 10 Business Days
- ☐ 8 Day RUSH
- ☐ 5 Day RUSH
- ☐ 3 Day *EMERGENCY*
- ☑ 2 Day *EMERGENCY* — Approved By:/Date: DBH/6/17/05
- ☐ 1 Day *EMERGENCY*

Emergency T/A is for FAX or Lablink Data

Data Deliverable Information

- ☐ Commercial "A"
- ☐ Commercial "B"
- ☐ Full Deliverables
- ☐ Other
- ☐ FULL CLP
- ☐ State Forms
- ☐ Disk Deliverable Format _____

Site Specific: QC Yes ☐ No ☐ If yes, indicate QC sample in Comments and submit triplicate volume.

Comments / Remarks

48 hour TAT

Loc. 6F

Sample Custody must be documented below each time samples change possession, including courier delivery.

Relinquished by Sampler:	Date Time:	Received by:	Relinquished by:	Date Time:	Received by:
1 Diana B. Hummel	6/17/05 16:55	1 Ryan M. Sweeney	2 Ryan M. Sweeney	6/17/05 1720	2 Ryan M. Sweeney
Relinquished by: 3	Date Time:	Received by: 3	Relinquished by: 4	Date Time:	Received by: 4
Relinquished by: 5	Date Time:	Received by: 5	Seal #	Preserved where applicable ☑	On Ice ☑ Temp. 4.2°C

New England ACCUTEST Laboratories

08/11/05

Technical Report for

Exxon Service Station

CDM:S/S 3-5805 1425 Massachusetts Ave., Boxborough, MA

PO#4506003635 WBS#08

Accutest Job Number: M49645

Sampling Date: 08/02/05

Report to:

Camp Dresser & McKee
50 Hampshire Avenue
Cambridge, MA 02139

ATTN: Jon Welch

Total number of pages in report: 38

ACCREDITED IN ACCORDANCE WITH nelac

Test results contained within this data package meet the requirements of the National Environmental Laboratory Accreditation Conference and/or state specific certification programs as applicable.

Reza Tand
Lab Director

Certifications: MA (M-MA136) CT (PH-0109) NH (250204) RI (00071) ME (MA136) FL (E87579) NY (23346) NJ (MA926) NAVY USACE

This report shall not be reproduced, except in its entirety, without the written approval of Accutest Laboratories.

ACCUTEST Laboratories

SAMPLE DELIVERY GROUP CASE NARRATIVE

Client:	Exxon Service Station	**Job No**	M49645
Site:	CDM:S/S 3-5805 1425 Massachusetts Ave., Boxborough, MA	**Report Date**	8/11/2005 8:21:47 AM

7 Samples were collected on 08/02/2005 and were received at Accutest on 08/02/2005 properly preserved, at 4.1 Deg. C and intact. These Samples received an Accutest job number of M49645. A listing of the Laboratory Sample ID, Client Sample ID and dates of collection are presented in the Results Summary Section of this report.

Except as noted below, all method specified calibrations and quality control performance criteria were met for this job. For more information, please refer to QC summary pages.

Volatiles by GCMS By Method EPA 624

Matrix: AQ **Batch ID:** MSD2545

- All samples were analyzed within the recommended method holding time.
- All method blanks for this batch meet method specific criteria.
- Sample(s) M49688-5MS, M49688-5MSD were used as the QC samples indicated.
- Only BTX and MTBE requested.

Metals By Method SW846 6010B

Matrix: AQ **Batch ID:** MP7473

- All samples were digested within the recommended method holding time.
- All samples were analyzed within the recommended method holding time.
- All method blanks for this batch meet method specific criteria.
- Sample(s) M49645-1DUP, M49645-1MS, M49645-1SDL were used as the QC samples for metals.

Wet Chemistry By Method EPA 110.2

Matrix: AQ **Batch ID:** GN17469

- All samples were analyzed within the recommended method holding time.
- All method blanks for this batch meet method specific criteria.
- Sample(s) M49645-4DUP were used as the QC samples for Color, Apparent.

Wet Chemistry By Method EPA 160.2

Matrix: AQ **Batch ID:** GN17479

- All samples were analyzed within the recommended method holding time.
- All method blanks for this batch meet method specific criteria.
- Sample(s) M49645-4DUP were used as the QC samples for Solids, Total Suspended.

Wet Chemistry By Method EPA 180.1

Matrix: AQ **Batch ID:** GN17466

- All samples were analyzed within the recommended method holding time.
- All method blanks for this batch meet method specific criteria.
- Sample(s) M49645-4DUP were used as the QC samples for Turbidity.

Wet Chemistry By Method EPA 418.1

Matrix: AQ	Batch ID: GP5828

- All samples were distilled within the recommended method holding time.
- All samples were analyzed within the recommended method holding time.
- All method blanks for this batch meet method specific criteria.
- Sample(s) M49688-2DUP, M49688-5MS were used as the QC samples for Petroleum Hydrocarbons.

The Accutest Laboratories of New England certifies that all analysis were performed within method specification. It is further recommended that this report to be used in its entirety.The Accutest Laboratories of NE, Laboratory Director or assignee as verified by the signature on the cover page has authorized the release of this report(M49645).

MADEP MCP Analytical Method Report Certification Form

Laboratory Name:	Accutest Laboratories of New England	Project #:	M49645
Project Location:	CDM:S/S 3-5805 1425 Massachusetts Ave., Boxborough, MA	MADEP RTN [1]	None

This form provides certifications for the following data set:
M49645-1,M49645-2,M49645-3,M49645-4,M49645-5,M49645-6,M49645-7

Test Method :EPA 624, 110.2, 160.2, 180.1, 418.1, and below

Sample Matrices: Groundwater X Soil/Sediment () Drinking Water () Other: () ()

MCP SW-846 Methods Used					
	8260B ()	8151A ()	8330 ()	6010B (X)	7470A/1A ()
	8270C ()	8081A ()	VPH ()	6020 ()	9014M [2] ()
	8082 ()	8021B ()	EPH ()	7000 S [3] ()	7196A ()

As specified in MADEP Compendium of Analytical Methods (Check all that apply)
1 List Release Tracking Number (RTN), if known
2 M - SW-846 Method 9014 or MADEP Physiologically Available Cyanide (PAC) Method
3 S - SW-846 Methods 7000 Series. List individual method and analyte

An affirmative response to questions A, B, C, and D is required for "Presumptive Certainty status

A	Were all samples received by the laboratory in a condition consistent with that described on the Chain-of-Custody documentation for the data set?	☑	Yes	☐ No [1]
B	Were all QA/QC procedures required for the specified analytical method(s) included in this report followed, including the requirement to note and discuss in a narrative QC data that did not meet appropriate performance standards or guidelines?	☑	Yes	☐ No [1]
C	Does the data included in this report meet all the analytical requirements for "Presumptive Certainty", as described in Section 2.0 (a), (b), (c) and (d) of the MADEP document CAM VII A, "Quality Assurance and Quality Control Guidelines for the Acquisition and Reporting of Analytical Data"?	☑	Yes	☐ No [1]
D	**VPH and EPH methods only:** Was the VPH or EPH method run without significant modifications, as specified in Section 11.3?	☑	Yes	☐ No [1]

A response to questions E and F below is required for "Presumptive Certainty" status

E	Were all QC performance standards and recommendations for the specified methods achieved?	☑ Refer to Narrative	Yes	☐ No [1]
F	Were results for all analyte-list compounds/elements for the specified method(s) reported?	☐ Refer to Narrative	Yes	☑ No [1]

[1] ***All Negative responses must be addressed in an attached Environmental Laboratory case narrative.***

I the undersigned, attest under the pains and penalties of perjury that, based upon my personal inquiry of those responsible for obtaining the information, the material contained in this analytical report is, to the best of my knowledge and belief, accurate and complete.

Signature: [signature] **Position:** **Laboratory Director**

Printed Name: **Reza Tand** **Date:** **08/11/2005**

Accutest Laboratories

Sample Summary

Exxon Service Station

Job No: M49645

CDM:S/S 3-5805 1425 Massachusetts Ave., Boxborough, MA
Project No: PO#4506003635 WBS#08

Sample Number	Collected Date	Collected Time By	Received	Matrix Code	Matrix Type	Client Sample ID
M49645-1	08/02/05	11:35 RMB	08/02/05	AQ	Ground Water	IX-MID-080205
M49645-2	08/02/05	11:40 RMB	08/02/05	AQ	Ground Water	IX-INF-080205
M49645-3	08/02/05	12:10 RMB	08/02/05	AQ	Ground Water	INF-GW-080205
M49645-4	08/02/05	11:30 RMB	08/02/05	AQ	Ground Water	EFF-GW-080205
M49645-5	08/02/05	11:55 RMB	08/02/05	AQ	Ground Water	MID-GW-080205
M49645-6	08/02/05	11:45 RMB	08/02/05	AQ	Ground Water	ASINF-GW-080205
M49645-7	08/02/05	11:50 RMB	08/02/05	AQ	Ground Water	ASEFF-GW-080205

Accutest Laboratories

Report of Analysis

Client Sample ID:	INF-GW-080205		
Lab Sample ID:	M49645-3	**Date Sampled:**	08/02/05
Matrix:	AQ - Ground Water	**Date Received:**	08/02/05
Method:	EPA 624	**Percent Solids:**	n/a
Project:	CDM:S/S 3-5805 1425 Massachusetts Ave., Boxborough, MA		

	File ID	DF	Analyzed	By	Prep Date	Prep Batch	Analytical Batch
Run #1	D44732.D	1	08/05/05	AT	n/a	n/a	MSD2545
Run #2	D44744.D	500	08/06/05	AT	n/a	n/a	MSD2545

	Purge Volume
Run #1	5.0 ml
Run #2	5.0 ml

Purgeable Aromatics, MTBE

CAS No.	Compound	Result	RL	Units	Q
71-43-2	Benzene	6.4	0.50	ug/l	
108-88-3	Toluene	45.2	1.0	ug/l	
100-41-4	Ethylbenzene	362	1.0	ug/l	
1330-20-7	Xylenes (total)	621	1.0	ug/l	
1634-04-4	Methyl Tert Butyl Ether	11800 [a]	500	ug/l	

CAS No.	Surrogate Recoveries	Run# 1	Run# 2	Limits
17060-07-0	1,2-Dichloroethane-D4 (SUR)	94%	96%	76-138%
2037-26-5	Toluene-D8 (SUR)	97%	95%	86-114%
460-00-4	4-Bromofluorobenzene (SUR)	100%	96%	76-114%

(a) Result is from Run# 2

ND = Not detected
RL = Reporting Limit
E = Indicates value exceeds calibration range

J = Indicates an estimated value
B = Indicates analyte found in associated method blank
N = Indicates presumptive evidence of a compound

Accutest Laboratories

Report of Analysis

Client Sample ID:	INF-GW-080205		
Lab Sample ID:	M49645-3	**Date Sampled:**	08/02/05
Matrix:	AQ - Ground Water	**Date Received:**	08/02/05
		Percent Solids:	n/a
Project:	CDM:S/S 3-5805 1425 Massachusetts Ave., Boxborough, MA		

Metals Analysis

Analyte	Result	RL	Units	DF	Prep	Analyzed By		Method	Prep Method
Lead	<5.0	5.0	ug/l	1	08/04/05	08/05/05	LMN	SW846 6010B [1]	SW846 3010A [2]

(1) Instrument QC Batch: MA6137
(2) Prep QC Batch: MP7473

RL = Reporting Limit

Accutest Laboratories

Report of Analysis

Client Sample ID:	INF-GW-080205		
Lab Sample ID:	M49645-3	**Date Sampled:**	08/02/05
Matrix:	AQ - Ground Water	**Date Received:**	08/02/05
		Percent Solids:	n/a
Project:	CDM:S/S 3-5805 1425 Massachusetts Ave., Boxborough, MA		

General Chemistry

Analyte	Result	RL	Units	DF	Analyzed	By	Method
Color, Apparent	40	5	CU	1	08/02/05 17:40	MA	EPA 110.2
Petroleum Hydrocarbons	1.4	0.62	mg/l	1	08/08/05	BF	EPA 418.1
Solids, Total Suspended	12.0	4.0	mg/l	1	08/04/05	BF	EPA 160.2
Turbidity	8.5	0.50	NTU	1	08/02/05 17:10	MA	EPA 180.1

RL = Reporting Limit

GC/MS Volatiles

QC Data Summaries

Includes the following where applicable:

- Method Blank Summaries
- Blank Spike Summaries
- Matrix Spike and Duplicate Summaries
- Surrogate Recovery Summaries

Method Blank Summary

Job Number: M49645
Account: EXXONSS Exxon Service Station
Project: CDM:S/S 3-5805 1425 Massachusetts Ave., Boxborough, MA

Sample	File ID	DF	Analyzed	By	Prep Date	Prep Batch	Analytical Batch
MSD2545-MB	D44723.D	1	08/05/05	AT	n/a	n/a	MSD2545

The QC reported here applies to the following samples: **Method:** EPA 624

M49645-3, M49645-5, M49645-6, M49645-7

CAS No.	Compound	Result	RL	Units	Q
71-43-2	Benzene	ND	0.50	ug/l	
100-41-4	Ethylbenzene	ND	1.0	ug/l	
1634-04-4	Methyl Tert Butyl Ether	ND	1.0	ug/l	
108-88-3	Toluene	ND	1.0	ug/l	
1330-20-7	Xylenes (total)	ND	1.0	ug/l	

CAS No.	Surrogate Recoveries		Limits
17060-07-0	1,2-Dichloroethane-D4 (SUR)	95%	76-138%
2037-26-5	Toluene-D8 (SUR)	95%	86-114%
460-00-4	4-Bromofluorobenzene (SUR)	92%	76-114%

Blank Spike Summary

Job Number: M49645
Account: EXXONSS Exxon Service Station
Project: CDM:S/S 3-5805 1425 Massachusetts Ave., Boxborough, MA

Sample	File ID	DF	Analyzed	By	Prep Date	Prep Batch	Analytical Batch
MSD2545-BS	D44721.D	1	08/05/05	AT	n/a	n/a	MSD2545

The QC reported here applies to the following samples: **Method:** EPA 624

M49645-3, M49645-5, M49645-6, M49645-7

CAS No.	Compound	Spike ug/l	BSP ug/l	BSP %	Limits
71-43-2	Benzene	20	16.1	81	37-151
100-41-4	Ethylbenzene	20	21.5	108	37-162
1634-04-4	Methyl Tert Butyl Ether	20	21.8	109	58-150
108-88-3	Toluene	20	20.8	104	47-150
1330-20-7	Xylenes (total)	60	61.7	103	68-136

CAS No.	Surrogate Recoveries	BSP	Limits
17060-07-0	1,2-Dichloroethane-D4 (SUR)	99%	76-138%
2037-26-5	Toluene-D8 (SUR)	98%	86-114%
460-00-4	4-Bromofluorobenzene (SUR)	97%	76-114%

Matrix Spike/Matrix Spike Duplicate Summary

Job Number: M49645
Account: EXXONSS Exxon Service Station
Project: CDM:S/S 3-5805 1425 Massachusetts Ave., Boxborough, MA

Sample	File ID	DF	Analyzed	By	Prep Date	Prep Batch	Analytical Batch
M49688-5MS	D44726.D	5	08/05/05	AT	n/a	n/a	MSD2545
M49688-5MSD	D44727.D	5	08/05/05	AT	n/a	n/a	MSD2545
M49688-5	D44725.D	1	08/05/05	AT	n/a	n/a	MSD2545

The QC reported here applies to the following samples: **Method:** EPA 624

M49645-3, M49645-5, M49645-6, M49645-7

CAS No.	Compound	M49688-5 ug/l	Q	Spike ug/l	MS ug/l	MS %	MSD ug/l	MSD %	RPD	Limits Rec/RPD
71-43-2	Benzene	ND		100	81.6	82	81.7	82	0	37-151/30
100-41-4	Ethylbenzene	ND		100	114	114	106	106	7	37-162/30
1634-04-4	Methyl Tert Butyl Ether	ND		100	104	104	109	109	5	46-150/24
108-88-3	Toluene	ND		100	111	111	113	113	2	47-150/30
1330-20-7	Xylenes (total)	ND		300	329	110	328	109	0	66-138/28

CAS No.	Surrogate Recoveries	MS	MSD	M49688-5	Limits
17060-07-0	1,2-Dichloroethane-D4 (SUR)	97%	97%	98%	76-138%
2037-26-5	Toluene-D8 (SUR)	98%	101%	93%	86-114%
460-00-4	4-Bromofluorobenzene (SUR)	96%	101%	96%	76-114%

Volatile Surrogate Recovery Summary

Job Number: M49645
Account: EXXONSS Exxon Service Station
Project: CDM:S/S 3-5805 1425 Massachusetts Ave., Boxborough, MA

Method: EPA 624 **Matrix:** AQ

Samples and QC shown here apply to the above method

Lab Sample ID	Lab File ID	S1	S2	S3
M49645-3	D44744.D	96.0	95.0	96.0
M49645-3	D44732.D	94.0	97.0	100.0
M49645-4	D44784.D	93.0	99.0	99.0
M49645-5	D44743.D	87.0	99.0	94.0
M49645-6	D44745.D	95.0	97.0	95.0
M49645-6	D44735.D	88.0	97.0	99.0
M49645-7	D44746.D	94.0	99.0	94.0
M49645-7	D44736.D	95.0	97.0	98.0
M49688-5MS	D44726.D	97.0	98.0	96.0
M49688-5MSD	D44727.D	97.0	101.0	101.0
MSD2545-BS	D44721.D	99.0	98.0	97.0
MSD2545-MB	D44723.D	95.0	95.0	92.0

Surrogate Compounds	Recovery Limits
S1 = 1,2-Dichloroethane-D4 (SUR)	76-138%
S2 = Toluene-D8 (SUR)	86-114%
S3 = 4-Bromofluorobenzene (SUR)	76-114%

Metals Analysis

QC Data Summaries

Includes the following where applicable:

- Method Blank Summaries
- Matrix Spike and Duplicate Summaries
- Blank Spike and Lab Control Sample Summaries
- Serial Dilution Summaries

BLANK RESULTS SUMMARY
Part 2 - Method Blanks

Login Number: M49645
Account: EXXONSS - Exxon Service Station
Project: CDM:S/S 3-5805 1425 Massachusetts Ave., Boxborough, MA

QC Batch ID: MP7473
Matrix Type: AQUEOUS

Methods: SW846 6010B
Units: ug/l

Prep Date: 08/04/05

Metal	RL	IDL	MB raw	final
Aluminum	200	14		
Antimony	6.0	1.6		
Arsenic	5.0	2.3		
Barium	200	1.7		
Beryllium	4.0	.18		
Boron	100	1.2		
Cadmium	4.0	.31		
Calcium	5000	4.7		
Chromium	10	.53		
Cobalt	50	.47		
Copper	25	2.8		
Iron	100	14		
Lead	5.0	1.9	-1.5	<5.0
Magnesium	5000	5.3		
Manganese	15	.17		
Molybdenum	100	.92		
Nickel	40	.65		
Potassium	5000	31		
Selenium	10	2.7		
Silver	5.0	.53		
Sodium	5000	110		
Strontium	10	.22		
Thallium	10	2.9		
Tin	100	9.4		
Titanium	50	1.3		
Vanadium	50	2.4		
Zinc	20	1.2		

Associated samples MP7473: M49645-1, M49645-2, M49645-3, M49645-4, M49645-5, M49645-6, M49645-7

Results < IDL are shown as zero for calculation purposes
(*) Outside of QC limits
(anr) Analyte not requested

MATRIX SPIKE AND DUPLICATE RESULTS SUMMARY

Login Number: M49645
Account: EXXONSS - Exxon Service Station
Project: CDM:S/S 3-5805 1425 Massachusetts Ave., Boxborough, MA

QC Batch ID: MP7473
Matrix Type: AQUEOUS

Methods: SW846 6010B
Units: ug/l

Prep Date:				08/04/05				08/04/05	
Metal	M49645-1 Original	MS	Spikelot MPIRWS2	% Rec	QC Limits	M49645-1 Original	DUP	RPD	QC Limits
Aluminum									
Antimony									
Arsenic									
Barium									
Beryllium									
Boron									
Cadmium									
Calcium									
Chromium									
Cobalt									
Copper									
Iron									
Lead	0.0	1010	1000	101.0	75-125	0.0	0.0	NC	0-20
Magnesium									
Manganese									
Molybdenum									
Nickel									
Potassium									
Selenium									
Silver									
Sodium									
Strontium									
Thallium									
Tin									
Titanium									
Vanadium									
Zinc									

Associated samples MP7473: M49645-1, M49645-2, M49645-3, M49645-4, M49645-5, M49645-6, M49645-7

Results < IDL are shown as zero for calculation purposes
(*) Outside of QC limits
(N) Matrix Spike Rec. outside of QC limits
(anr) Analyte not requested

SPIKE BLANK AND LAB CONTROL SAMPLE SUMMARY

Login Number: M49645
Account: EXXONSS - Exxon Service Station
Project: CDM:S/S 3-5805 1425 Massachusetts Ave., Boxborough, MA

QC Batch ID: MP7473
Matrix Type: AQUEOUS

Methods: SW846 6010B
Units: ug/l

Prep Date:			08/04/05					08/04/05	
Metal	BSP Result	Spikelot MPIRWS2	% Rec	QC Limits	BSD Result	Spikelot MPIRWS2	% Rec	BSD RPD	QC Limit
Aluminum									
Antimony									
Arsenic									
Barium									
Beryllium									
Boron									
Cadmium									
Calcium									
Chromium									
Cobalt									
Copper									
Iron									
Lead	976	1000	97.6	80-120	1020	1000	102.0	4.4	
Magnesium									
Manganese									
Molybdenum									
Nickel									
Potassium									
Selenium									
Silver									
Sodium									
Strontium									
Thallium									
Tin									
Titanium									
Vanadium									
Zinc									

Associated samples MP7473: M49645-1, M49645-2, M49645-3, M49645-4, M49645-5, M49645-6, M49645-7

Results < IDL are shown as zero for calculation purposes
(*) Outside of QC limits
(anr) Analyte not requested

SERIAL DILUTION RESULTS SUMMARY

Login Number: M49645
Account: EXXONSS - Exxon Service Station
Project: CDM:S/S 3-5805 1425 Massachusetts Ave., Boxborough, MA

QC Batch ID: MP7473
Matrix Type: AQUEOUS

Methods: SW846 6010B
Units: ug/l

Prep Date: 08/04/05

Metal	M49645-1 Original	SDL 1:5	RPD	QC Limits
Aluminum				
Antimony				
Arsenic				
Barium				
Beryllium				
Boron				
Cadmium				
Calcium				
Chromium				
Cobalt				
Copper				
Iron				
Lead	0.00	0.00	NC	0-10
Magnesium				
Manganese				
Molybdenum				
Nickel				
Potassium				
Selenium				
Silver				
Sodium				
Strontium				
Thallium				
Tin				
Titanium				
Vanadium				
Zinc				

Associated samples MP7473: M49645-1, M49645-2, M49645-3, M49645-4, M49645-5, M49645-6, M49645-7

Results < IDL are shown as zero for calculation purposes
(*) Outside of QC limits
(anr) Analyte not requested

General Chemistry

QC Data Summaries

Includes the following where applicable:

- Method Blank and Blank Spike Summaries
- Duplicate Summaries
- Matrix Spike Summaries

METHOD BLANK AND SPIKE RESULTS SUMMARY
GENERAL CHEMISTRY

Login Number: M49645
Account: EXXONSS - Exxon Service Station
Project: CDM:S/S 3-5805 1425 Massachusetts Ave., Boxborough, MA

Analyte	Batch ID	RL	MB Result	Units	Spike Amount	BSP Result	BSP %Recov	QC Limits
Color, Apparent	GN17469	5	<5	CU				
Petroleum Hydrocarbons	GP5828/GN17507	0.60	<0.60	mg/l	5	4.2	84.0	80-120%
Solids, Total Suspended	GN17479	4.0	<4.0	mg/l				
Turbidity	GN17466	0.50	<0.50	NTU				

Associated Samples:
Batch GN17466: M49645-3, M49645-4
Batch GN17469: M49645-3, M49645-4
Batch GN17479: M49645-3, M49645-4
Batch GP5828: M49645-3, M49645-4

DUPLICATE RESULTS SUMMARY
GENERAL CHEMISTRY

Login Number: M49645
Account: EXXONSS - Exxon Service Station
Project: CDM:S/S 3-5805 1425 Massachusetts Ave., Boxborough, MA

Analyte	Batch ID	QC Sample	Units	Original Result	DUP Result	RPD	QC Limits
Color, Apparent	GN17469	M49645-4	CU	<5	<5	0.0	0-20%
Petroleum Hydrocarbons	GP5828/GN17507	M49688-2	mg/l	<0.61	<0.61	0.0	0-20%
Solids, Total Suspended	GN17479	M49645-4	mg/l	<4.0	<4.0	0.0	0-20%
Turbidity	GN17466	M49645-4	NTU	<0.50	<0.50	0.0	0-20%

Associated Samples:
Batch GN17466: M49645-3, M49645-4
Batch GN17469: M49645-3, M49645-4
Batch GN17479: M49645-3, M49645-4
Batch GP5828: M49645-3, M49645-4

MATRIX SPIKE RESULTS SUMMARY
GENERAL CHEMISTRY

Login Number: M49645
Account: EXXONSS - Exxon Service Station
Project: CDM:S/S 3-5805 1425 Massachusetts Ave., Boxborough, MA

Analyte	Batch ID	QC Sample	Units	Original Result	Spike Amount	MS Result	%Rec	QC Limits
Petroleum Hydrocarbons	GP5828/GN17507	M49688-5	mg/l	<0.61	5.1	5.1	100.0	75-125%

Associated Samples:
Batch GP5828: M49645-3, M49645-4

Misc. Forms

Custody Documents and Other Forms

Includes the following where applicable:

- Sample Tracking Chronicle

Accutest Laboratories

Internal Sample Tracking Chronicle

Exxon Service Station

Job No: M49645

CDM:S/S 3-5805 1425 Massachusetts Ave., Boxborough, MA
Project No: PO#4506003635 WBS#08

Sample Number	Method	Analyzed	By	Prepped	By	Test Codes
M49645-1 Collected: 02-AUG-05 11:35 By: RMB Received: 02-AUG-05 By: RS IX-MID-080205						
M49645-1	SW846 6010B	05-AUG-05 15:06	LMN	04-AUG-05	OP	PB
M49645-2 Collected: 02-AUG-05 11:40 By: RMB Received: 02-AUG-05 By: RS IX-INF-080205						
M49645-2	SW846 6010B	05-AUG-05 15:18	LMN	04-AUG-05	OP	PB
M49645-3 Collected: 02-AUG-05 12:10 By: RMB Received: 02-AUG-05 By: RS INF-GW-080205						
M49645-3	EPA 180.1	02-AUG-05 17:10	MA			TURB
M49645-3	EPA 110.2	02-AUG-05 17:40	MA			COL
M49645-3	EPA 160.2	04-AUG-05	BF			TSS
M49645-3	SW846 6010B	05-AUG-05 15:24	LMN	04-AUG-05	OP	PB
M49645-3	EPA 624	05-AUG-05 23:37	AT			V624BTXM
M49645-3	EPA 624	06-AUG-05 11:12	AT			V624BTXM
M49645-3	EPA 418.1	08-AUG-05	BF	08-AUG-05	BF	PHC
M49645-4 Collected: 02-AUG-05 11:30 By: RMB Received: 02-AUG-05 By: RS EFF-GW-080205						
M49645-4	EPA 180.1	02-AUG-05 17:10	MA			TURB
M49645-4	EPA 110.2	02-AUG-05 17:40	MA			COL
M49645-4	EPA 160.2	04-AUG-05	BF			TSS
M49645-4	SW846 6010B	05-AUG-05 15:41	LMN	04-AUG-05	OP	PB
M49645-4	EPA 418.1	08-AUG-05	BF	08-AUG-05	BF	PHC
M49645-4	EPA 624	09-AUG-05 16:55	AT			V624BTXM
M49645-5 Collected: 02-AUG-05 11:55 By: RMB Received: 02-AUG-05 By: RS MID-GW-080205						
M49645-5	SW846 6010B	05-AUG-05 15:47	LMN	04-AUG-05	OP	PB
M49645-5	EPA 624	06-AUG-05 10:35	AT			V624BTXM
M49645-6 Collected: 02-AUG-05 11:45 By: RMB Received: 02-AUG-05 By: RS ASINF-GW-080205						

Internal Sample Tracking Chronicle

Exxon Service Station

Job No: M49645

CDM:S/S 3-5805 1425 Massachusetts Ave., Boxborough, MA
Project No: PO#4506003635 WBS#08

Sample Number	Method	Analyzed	By	Prepped	By	Test Codes
M49645-6	SW846 6010B	05-AUG-05 15:53	LMN	04-AUG-05	OP	PB
M49645-6	EPA 624	06-AUG-05 01:31	AT			V624BTXM
M49645-6	EPA 624	06-AUG-05 11:50	AT			V624BTXM
M49645-7 Collected: 02-AUG-05 11:50 By: RMB Received: 02-AUG-05 By: RS ASEFF-GW-080205						
M49645-7	SW846 6010B	05-AUG-05 15:59	LMN	04-AUG-05	OP	PB
M49645-7	EPA 624	06-AUG-05 02:09	AT			V624BTXM
M49645-7	EPA 624	06-AUG-05 12:28	AT			V624BTXM

INTERNAL MEMO
SAMPLE MANAGEMENT

Client: C.D.M. Point of contact: Jon Welch Time of contact: PM

Tel #_____ Fax #_____ Job #: M49645

****

Sample status: Cancel: ☐ Add: ☐ Change: ☐

Turn Around: ☐

****

Supply status: Bottles: ☐ COC: ☐ Preservative: ☐

Sample #	Detailed comments/request
M49645-3	No Volume For Settleable Solids Submitted
" -4	(Only 1-950ml Sufficient For TSS/Color Turbidity)
	Cancel SS will Resample
	AM 8/2/05
	DATE _____

ACCUTEST Laboratories
495 Tech Center West, Bldg. 1
Marlboro, MA 01752
508-481-6200 FAX: 508-481-6200

1011

Accutest Job #: M49645

Client Information | **Facility Information**

EXXONMOBIL CORPORATION - Regional Laboratory Program Northeast

Consultants Company Name: CDM	Project Name: Xom Boxboro
Address: 50 Hampshire St	Street: 1425 Mass. Ave
City: Cambridge State: MA Zip: 02139	City: Boxboro State: MA
Project Contact: Jon Welch	ExxonMobil Contact: Eric Errico
Sampler's Name: Ryan Bouldin	ExxonMobil Contact Phone #:
Phone #: 617-452-6000 Ext. Fax #:	Location ID#: 3-5805 WBS#
AFE #:	PO# Line#

Analytical Information

Accutest Sample #	Field ID / Point of Collection	Collection Date	Collection Time	Sampled by	Matrix	# of bottles	Preservation HCL	NaOH	HNO3	H2SO4	MEOH	Encore	Other	None	BTEX 8260 ☐ 524 ☐ MTBE ☒ / TBA ☐ Naphthalene ☐ Oxygenates ☐	VOC AQUEOUS 8260 ☐ 624 ☐ 524 ☐ STD ☐ TCL ☐ / PPL ☐ MTBE ☐ TBA ☐ Oxygenates ☐	VOC SOIL 8260 ☐ STD ☐ TCL ☐ PPL ☐ MTBE ☐ / TBA ☐ Oxygenates ☐ 5035/LOW ☐ 5035MED ☐	VPH-RANGES ☐ TARGETS ☐	EPH RANGES ☐ TARGET (PAH) ☐ DIESEL (PAH) ☐	TPH-CTDEP ☐ TPH418.1 ☒	TPH-MAINE GRO ☐ DRO ☐	TPH-8015 GRO ☐ TPH-8015 DRO ☐	METALS TOTAL ☐ DISSOLVED ☐ HM8 ☐ HM5 ☐	METALS TCLP ☐ SPLP ☐ HM8 ☐ HM5 ☐	TSS	Color / Turbidity	Total Settleable Solids	Total Lead (Unfiltered)
-1	IX-Mid-080205	8-2-05	1135	RMB	GW	1			✓																			✓
-2	IX-Inf-080205	↓	1140	↓	↓	1			✓																			✓
-3	Inf-GW-080205*		1210			7	✓		✓					✓	✓	✓				✓				✓	✓	✓	✓	✓
-4	Eff-GW-080205*		1120			7	✓		✓					✓	✓	✓				✓				✓	✓	✓	✓	✓
-5	Mid-GW-080205		1155			3	✓		✓						✓	✓												✓
-6	ASInf-GW-080205		1145			3	✓		✓						✓	✓												✓
-7	ASEff-GW-080205	↓	1150	↓	↓	3	✓		✓						✓	✓												✓

Turnaround Time (Business days)

- ☒ Std. 10 Business Days — Approved By:/Date
- ☐ 8 Day RUSH
- ☒ 5 Day RUSH
- ☐ 3 Day *EMERGENCY*
- ☐ 2 Day *EMERGENCY*
- ☐ 1 Day EMERGENCY

Emergency T/A is for FAX or Lablink Data

Data Deliverable Information

- ☐ Commercial "A"
- ☐ Commercial "B"
- ☐ Full Deliverables
- ☐ Other
- ☐ FULL CLP
- ☐ State Forms
- ☐ Disk Deliverable Format _____

Site Specific: QC Yes ☐ No ☐ If yes, indicate QC sample in Comments and submit triplicate volume.

Comments / Remarks

MCP Presumptive Certainty Required
* 5 day TAT, all others standard TAT
GW-1 Stds Apply

Loc. 5B, 11B, 2C3, 4F

Sample Custody must be documented below each time samples change possession, including courier delivery.

Relinquished by Sampler: 1 Ryan M Bouldin	Date Time: 8/2/05 13:30	Received by: 1 [signature]	Relinquished by: 2	Date Time:	Received by: 2
Relinquished by: 3	Date Time:	Received by: 3	Relinquished by: 4	Date Time:	Received by: 4
Relinquished by: 5	Date Time:	Received by: 5	Seal #	Preserved where applicable ☐	On Ice ☑ Temp. 4.1 °C

New England
ACCUTEST.
Laboratories

10/04/05

Technical Report for

Exxon Service Station

CDM:S/S 3-5805 1425 Massachusetts Ave., Boxborough, MA

PO#4506003635 WBS#08

Accutest Job Number: M50976

Sampling Date: 09/22/05

Report to:

Camp Dresser & McKee
50 Hampshire Avenue
Cambridge, MA 02139

ATTN: Jon Welch

Total number of pages in report: 28

ACCREDITED IN ACCORDANCE WITH nelac

Test results contained within this data package meet the requirements of the National Environmental Laboratory Accreditation Conference and/or state specific certification programs as applicable.

Reza Pand
Lab Director

Certifications: MA (M-MA136) CT (PH-0109) NH (250204) RI (00071) ME (MA136) FL (E87579) NY (23346) NJ (MA926) NAVY USACE

This report shall not be reproduced, except in its entirety, without the written approval of Accutest Laboratories.

ACCUTEST laboratories

SAMPLE DELIVERY GROUP CASE NARRATIVE

Client: Exxon Service Station **Job No** M50976

Site: CDM:S/S 3-5805 1425 Massachusetts Ave., Boxborough, MA **Report Date** 10/4/2005 5:08:00 PM

2 Samples were collected on 09/22/2005 and were received at Accutest on 09/22/2005 properly preserved, at 4.2 Deg. C and intact. These Samples received an Accutest job number of M50976. A listing of the Laboratory Sample ID, Client Sample ID and dates of collection are presented in the Results Summary Section of this report.

Except as noted below, all method specified calibrations and quality control performance criteria were met for this job. For more information, please refer to QC summary pages.

Volatiles by GCMS By Method EPA 624

Matrix: AQ **Batch ID:** MSD2561

- All samples were analyzed within the recommended method holding time.
- All method blanks for this batch meet method specific criteria.
- Sample(s) M50979-1MS, M50979-1MSD were used as the QC samples indicated.
- Only BTX and MTBE requested.

Metals By Method SW846 6010B

Matrix: AQ **Batch ID:** MP7668

- All samples were digested within the recommended method holding time.
- All samples were analyzed within the recommended method holding time.
- All method blanks for this batch meet method specific criteria.
- Sample(s) M50854-1ADUP, M50854-1AMS, M50854-1ASDL were used as the QC samples for metals.

Wet Chemistry By Method EPA 110.2

Matrix: AQ **Batch ID:** GN17898

- All samples were analyzed within the recommended method holding time.
- All method blanks for this batch meet method specific criteria.
- Sample(s) M50976-2DUP were used as the QC samples for Color, Apparent.

Wet Chemistry By Method EPA 160.2

Matrix: AQ **Batch ID:** GN17905

- All samples were analyzed within the recommended method holding time.
- All method blanks for this batch meet method specific criteria.
- Sample(s) M50976-2DUP were used as the QC samples for Solids, Total Suspended.

Wet Chemistry By Method EPA 160.5

Matrix: AQ **Batch ID:** GN17899

- All samples were analyzed within the recommended method holding time.
- All method blanks for this batch meet method specific criteria.
- Sample(s) M50976-1DUP were used as the QC samples for Solids, Settleable.

Wet Chemistry By Method EPA 180.1

Matrix: AQ	Batch ID: GN17900

- All samples were analyzed within the recommended method holding time.
- All method blanks for this batch meet method specific criteria.
- Sample(s) M50976-2DUP were used as the QC samples for Turbidity.

Wet Chemistry By Method EPA 418.1

Matrix: AQ	Batch ID: GP5984

- All samples were distilled within the recommended method holding time.
- All samples were analyzed within the recommended method holding time.
- All method blanks for this batch meet method specific criteria.
- Sample(s) M50936-1DUP, M50936-2MS were used as the QC samples for Petroleum Hydrocarbons.

The Accutest Laboratories of New England certifies that all analysis were performed within method specification. It is further recommended that this report to be used in its entirety.The Accutest Laboratories of NE, Laboratory Director or assignee as verified by the signature on the cover page has authorized the release of this report(M50976).

Title: **MADEP MCP Response Action Analytical Report Certification Form**

MADEP MCP Analytical Method Report Certification Form

Laboratory Name:	Accutest Laboratories of New England	Project #:	M50976
Project Location:	CDM:S/S 3-5805 1425 Massachusetts Ave., Boxborough, MA	MADEP RTN [1]	None

This form provides certifications for the following data set:
M50976-1,M50976-2

Test Method: EPA 624, 110.2, 160.2, 160.5, 180.1, 418.1, and below

Sample Matrices: Groundwater X Soil/Sediment ( ) Drinking Water ( ) Other: ( ) ( )

MCP SW-846 Methods Used					
	8260B ( )	8151A ( )	8330 ( )	6010B (X)	7470A/1A ( )
	8270C ( )	8081A ( )	VPH ( )	6020 ( )	9014M [2] ( )
As specified in MADEP Compendium of Analytical Methods. (Check all that apply)	8082 ( )	8021B ( )	EPH ( )	7000 S [3] ( )	7196A ( )

1 List Release Tracking Number (RTN), if known
2 M - SW-846 Method 9014 or MADEP Physiologically Available Cyanide (PAC) Method
3 S - SW-846 Methods 7000 Series. List individual method and analyte

An affirmative response to questions A, B, C, and D is required for "Presumptive Certainty status

A	Were all samples received by the laboratory in a condition consistent with that described on the Chain-of-Custody documentation for the data set?	☑	Yes	☐ No [1]
B	Were all QA/QC procedures required for the specified analytical method(s) included in this report followed, including the requirement to note and discuss in a narrative QC data that did not meet appropriate performance standards or guidelines?	☑	Yes	☐ No [1]
C	Does the data included in this report meet all the analytical requirements for "Presumptive Certainty", as described in Section 2.0 (a), (b), (c) and (d) of the MADEP document CAM VII A, "Quality Assurance and Quality Control Guidelines for the Acquisition and Reporting of Analytical Data"?	☑	Yes	☐ No [1]
D	**VPH and EPH methods only:** Was the VPH or EPH method run without significant modifications, as specified in Section 11.3?	☑	Yes	☐ No [1]

A response to questions E and F below is required for "Presumptive Certainty" status

E	Were all QC performance standards and recommendations for the specified methods achieved?	☑ Refer to Narrative	Yes	☐ No [1]
F	Were results for all analyte-list compounds/elements for the specified method(s) reported?	☐ Refer to Narrative	Yes	☑ No [1]

[1] ***All Negative responses must be addressed in an attached Environmental Laboratory case narrative.***

I the undersigned, attest under the pains and penalties of perjury that, based upon my personal inquiry of those responsible for obtaining the information, the material contained in this analytical report is, to the best of my knowledge and belief, accurate and complete.

Signature: [signature] **Position:** **Laboratory Director**

Printed Name: **Reza Tand** **Date:** **10/04/2005**

Accutest Laboratories

Sample Summary

Exxon Service Station

Job No: M50976

CDM:S/S 3-5805 1425 Massachusetts Ave., Boxborough, MA
Project No: PO#4506003635 WBS#08

Sample Number	Collected Date	Time By	Received	Matrix Code	Type	Client Sample ID
M50976-1	09/22/05	13:10 TAN	09/22/05	AQ	Ground Water	INF-GW-92205
M50976-2	09/22/05	13:20 TAN	09/22/05	AQ	Ground Water	EFF-GW-92205

Accutest Laboratories

Report of Analysis

Client Sample ID:	INF-GW-92205		
Lab Sample ID:	M50976-1	**Date Sampled:**	09/22/05
Matrix:	AQ - Ground Water	**Date Received:**	09/22/05
Method:	EPA 624	**Percent Solids:**	n/a
Project:	CDM:S/S 3-5805 1425 Massachusetts Ave., Boxborough, MA		

	File ID	DF	Analyzed	By	Prep Date	Prep Batch	Analytical Batch
Run #1	D45321.D	1	09/26/05	AT	n/a	n/a	MSD2561
Run #2	D45338.D	50	09/27/05	AT	n/a	n/a	MSD2561

	Purge Volume
Run #1	5.0 ml
Run #2	5.0 ml

Purgeable Aromatics, MTBE

CAS No.	Compound	Result	RL	Units	Q
71-43-2	Benzene	ND	0.50	ug/l	
108-88-3	Toluene	ND	1.0	ug/l	
100-41-4	Ethylbenzene	5.8	1.0	ug/l	
1330-20-7	Xylenes (total)	ND	1.0	ug/l	
1634-04-4	Methyl Tert Butyl Ether	3140 [a]	50	ug/l	

CAS No.	Surrogate Recoveries	Run# 1	Run# 2	Limits
17060-07-0	1,2-Dichloroethane-D4 (SUR)	116%	114%	76-138%
2037-26-5	Toluene-D8 (SUR)	98%	98%	86-114%
460-00-4	4-Bromofluorobenzene (SUR)	103%	106%	76-114%

(a) Result is from Run# 2

ND = Not detected
RL = Reporting Limit
E = Indicates value exceeds calibration range

J = Indicates an estimated value
B = Indicates analyte found in associated method blank
N = Indicates presumptive evidence of a compound

Accutest Laboratories

Report of Analysis

Client Sample ID:	INF-GW-92205		
Lab Sample ID:	M50976-1	**Date Sampled:**	09/22/05
Matrix:	AQ - Ground Water	**Date Received:**	09/22/05
		Percent Solids:	n/a
Project:	CDM:S/S 3-5805 1425 Massachusetts Ave., Boxborough, MA		

Metals Analysis

Analyte	Result	RL	Units	DF	Prep	Analyzed	By	Method	Prep Method
Lead	<5.0	5.0	ug/l	1	09/26/05	09/27/05	LMN	SW846 6010B [1]	SW846 3010A [2]

(1) Instrument QC Batch: MA6289
(2) Prep QC Batch: MP7668

RL = Reporting Limit

Accutest Laboratories

Report of Analysis

Client Sample ID:	INF-GW-92205		
Lab Sample ID:	M50976-1	**Date Sampled:**	09/22/05
Matrix:	AQ - Ground Water	**Date Received:**	09/22/05
		Percent Solids:	n/a
Project:	CDM:S/S 3-5805 1425 Massachusetts Ave., Boxborough, MA		

General Chemistry

Analyte	Result	RL	Units	DF	Analyzed	By	Method
Color, Apparent	75	25	CU	5	09/22/05 17:40	MA	EPA 110.2
Petroleum Hydrocarbons	<0.61	0.61	mg/l	1	09/23/05	BF	EPA 418.1
Solids, Settleable	<0.10	0.10	ml/l/hr	1	09/22/05 17:30	MA	EPA 160.5
Solids, Total Suspended	12.0	4.0	mg/l	1	09/23/05	BF	EPA 160.2
Turbidity	18.1	0.50	NTU	1	09/22/05 17:25	MA	EPA 180.1

RL = Reporting Limit

GC/MS Volatiles

QC Data Summaries

Includes the following where applicable:

- Method Blank Summaries
- Blank Spike Summaries
- Matrix Spike and Duplicate Summaries
- Surrogate Recovery Summaries

Method Blank Summary

Job Number: M50976
Account: EXXONSS Exxon Service Station
Project: CDM:S/S 3-5805 1425 Massachusetts Ave., Boxborough, MA

Sample	File ID	DF	Analyzed	By	Prep Date	Prep Batch	Analytical Batch
MSD2561-MB	D45311.D	1	09/26/05	AT	n/a	n/a	MSD2561

The QC reported here applies to the following samples: **Method:** EPA 624

M50976-1, M50976-2

CAS No.	Compound	Result	RL	Units	Q
71-43-2	Benzene	ND	0.50	ug/l	
100-41-4	Ethylbenzene	ND	1.0	ug/l	
1634-04-4	Methyl Tert Butyl Ether	ND	1.0	ug/l	
108-88-3	Toluene	ND	1.0	ug/l	
1330-20-7	Xylenes (total)	ND	1.0	ug/l	

CAS No.	Surrogate Recoveries		Limits
17060-07-0	1,2-Dichloroethane-D4 (SUR)	107%	76-138%
2037-26-5	Toluene-D8 (SUR)	98%	86-114%
460-00-4	4-Bromofluorobenzene (SUR)	104%	76-114%

Blank Spike Summary

Job Number: M50976
Account: EXXONSS Exxon Service Station
Project: CDM:S/S 3-5805 1425 Massachusetts Ave., Boxborough, MA

Sample	File ID	DF	Analyzed	By	Prep Date	Prep Batch	Analytical Batch
MSD2561-BS	D45309.D	1	09/26/05	AT	n/a	n/a	MSD2561

The QC reported here applies to the following samples: **Method:** EPA 624

M50976-1, M50976-2

CAS No.	Compound	Spike ug/l	BSP ug/l	BSP %	Limits
71-43-2	Benzene	20	22.6	113	37-151
100-41-4	Ethylbenzene	20	21.1	106	37-162
1634-04-4	Methyl Tert Butyl Ether	20	22.9	115	58-150
108-88-3	Toluene	20	20.8	104	47-150
1330-20-7	Xylenes (total)	60	62.7	105	68-136

CAS No.	Surrogate Recoveries	BSP	Limits
17060-07-0	1,2-Dichloroethane-D4 (SUR)	105%	76-138%
2037-26-5	Toluene-D8 (SUR)	104%	86-114%
460-00-4	4-Bromofluorobenzene (SUR)	105%	76-114%

Matrix Spike/Matrix Spike Duplicate Summary

Job Number: M50976
Account: EXXONSS Exxon Service Station
Project: CDM:S/S 3-5805 1425 Massachusetts Ave., Boxborough, MA

Sample	File ID	DF	Analyzed	By	Prep Date	Prep Batch	Analytical Batch
M50979-1MS	D45314.D	5	09/26/05	AT	n/a	n/a	MSD2561
M50979-1MSD	D45315.D	5	09/26/05	AT	n/a	n/a	MSD2561
M50979-1	D45313.D	1	09/26/05	AT	n/a	n/a	MSD2561

The QC reported here applies to the following samples: **Method:** EPA 624

M50976-1, M50976-2

CAS No.	Compound	M50979-1 ug/l	Q	Spike ug/l	MS ug/l	MS %	MSD ug/l	MSD %	RPD	Limits Rec/RPD
71-43-2	Benzene	ND		100	116	116	114	114	2	37-151/30
100-41-4	Ethylbenzene	ND		100	105	105	107	107	2	37-162/30
1634-04-4	Methyl Tert Butyl Ether	69.0		100	150	81	144	75	4	46-150/24
108-88-3	Toluene	ND		100	110	110	104	104	6	47-150/30
1330-20-7	Xylenes (total)	ND		300	309	103	298	99	4	66-138/28

CAS No.	Surrogate Recoveries	MS	MSD	M50979-1	Limits
17060-07-0	1,2-Dichloroethane-D4 (SUR)	109%	104%	114%	76-138%
2037-26-5	Toluene-D8 (SUR)	102%	96%	96%	86-114%
460-00-4	4-Bromofluorobenzene (SUR)	106%	106%	100%	76-114%

BLANK RESULTS SUMMARY
Part 2 - Method Blanks

Login Number: M50976
Account: EXXONSS - Exxon Service Station
Project: CDM:S/S 3-5805 1425 Massachusetts Ave., Boxborough, MA

QC Batch ID: MP7668
Matrix Type: AQUEOUS

Methods: SW846 6010B
Units: ug/l

Prep Date: 09/26/05

Metal	RL	IDL	MB raw	final
Aluminum	200	14		
Antimony	6.0	1.6	anr	
Arsenic	5.0	2.3	anr	
Barium	200	.64	anr	
Beryllium	4.0	.18	anr	
Boron	100	1.2		
Cadmium	4.0	.22	anr	
Calcium	5000	4.7		
Chromium	10	.53	anr	
Cobalt	50	.47		
Copper	25	1.2		
Iron	100	14	anr	
Lead	5.0	1.2	-0.43	<5.0
Magnesium	5000	5.3		
Manganese	15	.17		
Molybdenum	100	.48		
Nickel	40	.49	anr	
Potassium	5000	19		
Selenium	10	1.7	anr	
Silicon	100	11		
Silver	5.0	.12	anr	
Sodium	5000	94		
Strontium	10	.12		
Thallium	10	2.9	anr	
Tin	100	1.7		
Titanium	50	1.3		
Tungsten	100			
Vanadium	50	1.3	anr	
Zinc	20	1.2	anr	

Associated samples MP7668: M50976-1, M50976-2

Results < IDL are shown as zero for calculation purposes
(*) Outside of QC limits
(anr) Analyte not requested

MATRIX SPIKE AND DUPLICATE RESULTS SUMMARY

Login Number: M50976
Account: EXXONSS - Exxon Service Station
Project: CDM:S/S 3-5805 1425 Massachusetts Ave., Boxborough, MA

QC Batch ID: MP7668
Matrix Type: AQUEOUS

Methods: SW846 6010B
Units: ug/l

Prep Date:				09/26/05				09/26/05	
Metal	M50854-1A Original MS		Spikelot MPIRWS2	% Rec	QC Limits	M50854-1A Original DUP		RPD	QC Limits
Aluminum									
Antimony	anr								
Arsenic	anr								
Barium	anr								
Beryllium	anr								
Boron									
Cadmium	anr								
Calcium									
Chromium	anr								
Cobalt									
Copper									
Iron	anr								
Lead	0.0	952	1000	95.2	75-125	0.0	0.0	NC	0-20
Magnesium									
Manganese									
Molybdenum									
Nickel	anr								
Potassium									
Selenium	anr								
Silicon									
Silver	anr								
Sodium									
Strontium									
Thallium	anr								
Tin									
Titanium									
Tungsten									
Vanadium	anr								
Zinc	anr								

Associated samples MP7668: M50976-1, M50976-2

Results < IDL are shown as zero for calculation purposes
(*) Outside of QC limits
(N) Matrix Spike Rec. outside of QC limits
(anr) Analyte not requested

Volatile Surrogate Recovery Summary

Job Number: M50976
Account: EXXONSS Exxon Service Station
Project: CDM:S/S 3-5805 1425 Massachusetts Ave., Boxborough, MA

Method: EPA 624 **Matrix:** AQ

Samples and QC shown here apply to the above method

Lab Sample ID	Lab File ID	S1	S2	S3
M50976-1	D45338.D	114.0	98.0	106.0
M50976-1	D45321.D	116.0	98.0	103.0
M50976-2	D45336.D	109.0	92.0	105.0
M50979-1MS	D45314.D	109.0	102.0	106.0
M50979-1MSD	D45315.D	104.0	96.0	106.0
MSD2561-BS	D45309.D	105.0	104.0	105.0
MSD2561-MB	D45311.D	107.0	98.0	104.0

Surrogate Compounds	Recovery Limits
S1 = 1,2-Dichloroethane-D4 (SUR)	76-138%
S2 = Toluene-D8 (SUR)	86-114%
S3 = 4-Bromofluorobenzene (SUR)	76-114%

Metals Analysis

QC Data Summaries

Includes the following where applicable:

- Method Blank Summaries
- Matrix Spike and Duplicate Summaries
- Blank Spike and Lab Control Sample Summaries
- Serial Dilution Summaries

SPIKE BLANK AND LAB CONTROL SAMPLE SUMMARY

Login Number: M50976
Account: EXXONSS - Exxon Service Station
Project: CDM:S/S 3-5805 1425 Massachusetts Ave., Boxborough, MA

QC Batch ID: MP7668
Matrix Type: AQUEOUS

Methods: SW846 6010B
Units: ug/l

Prep Date:			09/26/05					09/26/05	
Metal	BSP Result	Spikelot MPIRWS2	% Rec	QC Limits	BSD Result	Spikelot MPIRWS2	% Rec	BSD RPD	QC Limit
Aluminum									
Antimony	anr								
Arsenic	anr								
Barium	anr								
Beryllium	anr								
Boron									
Cadmium	anr								
Calcium									
Chromium	anr								
Cobalt									
Copper									
Iron	anr								
Lead	982	1000	98.2	80-120	1010	1000	101.0	2.8	
Magnesium									
Manganese									
Molybdenum									
Nickel	anr								
Potassium									
Selenium	anr								
Silicon									
Silver	anr								
Sodium									
Strontium									
Thallium	anr								
Tin									
Titanium									
Tungsten									
Vanadium	anr								
Zinc	anr								

Associated samples MP7668: M50976-1, M50976-2

Results < IDL are shown as zero for calculation purposes
(*) Outside of QC limits
(anr) Analyte not requested

SERIAL DILUTION RESULTS SUMMARY

Login Number: M50976
Account: EXXONSS - Exxon Service Station
Project: CDM:S/S 3-5805 1425 Massachusetts Ave., Boxborough, MA

QC Batch ID: MP7668
Matrix Type: AQUEOUS

Methods: SW846 6010B
Units: ug/l

Prep Date: 09/26/05

Metal	M50854-1A Original	SDL 1:5	RPD	QC Limits
Aluminum				
Antimony	anr			
Arsenic	anr			
Barium	anr			
Beryllium	anr			
Boron				
Cadmium	anr			
Calcium				
Chromium	anr			
Cobalt				
Copper				
Iron	anr			
Lead	0.00	0.00	NC	0-10
Magnesium				
Manganese				
Molybdenum				
Nickel	anr			
Potassium				
Selenium	anr			
Silicon				
Silver	anr			
Sodium				
Strontium				
Thallium	anr			
Tin				
Titanium				
Tungsten				
Vanadium	anr			
Zinc	anr			

Associated samples MP7668: M50976-1, M50976-2

Results < IDL are shown as zero for calculation purposes
(*) Outside of QC limits
(anr) Analyte not requested

General Chemistry

QC Data Summaries

Includes the following where applicable:

- Method Blank and Blank Spike Summaries
- Duplicate Summaries
- Matrix Spike Summaries

METHOD BLANK AND SPIKE RESULTS SUMMARY
GENERAL CHEMISTRY

Login Number: M50976
Account: EXXONSS - Exxon Service Station
Project: CDM:S/S 3-5805 1425 Massachusetts Ave., Boxborough, MA

Analyte	Batch ID	RL	MB Result	Units	Spike Amount	BSP Result	BSP %Recov	QC Limits
Color, Apparent	GN17898	5	<5	CU				
Petroleum Hydrocarbons	GP5984/GN17906	0.60	<0.60	mg/l	5	5.1	102.0	80-120%
Solids, Settleable	GN17899	0.10	<0.10	ml/l/hr				
Solids, Total Suspended	GN17905	4.0	<4.0	mg/l				
Turbidity	GN17900	0.50	<0.50	NTU				

Associated Samples:
Batch GN17898: M50976-1, M50976-2
Batch GN17899: M50976-1, M50976-2
Batch GN17900: M50976-1, M50976-2
Batch GN17905: M50976-1, M50976-2
Batch GP5984: M50976-1, M50976-2

ACCUTEST Laboratories

CHAIN OF CUSTODY

495 Tech Center West, Bldg. 1
Marlboro, MA 01752
508-481-6200 FAX: 508-481-6200

1 of 1

Accutest Job #: M50976

Client Information | **Facility Information**

EXXONMOBIL CORPORATION - Regional Laboratory Program Northeast

Consultants Company Name: CDM	Project Name: BOXBOROUGH/EXXON
Address: 50 HAMPSHIRE ST	Street: 1425 MASS AVE
City: CAMBRIDGE State: MA Zip:	City: BOXBOROUGH State: MA
Project Contact: VON WELCH	ExxonMobil Contact: ERIC ERRICO
Sampler's Name: TED NAWN	ExxonMobil Contact Phone #: 617-881-2952
Phone #: 617-452-6332 Ext. Fax #:	Location ID#: 8-5805 WBS#
AFE #:	PO#: 4506008635 Line#

Analytical Information: BTEX 8260 ☐ 624 ☒ 8021 ☐ 524 ☐ MTBE ☒; TBA ☐ Naphthalene ☐ Oxygenates ☐; VOC AQUEOUS 8260 ☐ 624 ☐ 524 ☐ STD ☐ TCL ☐; PPL ☐ MTBE ☐ TBA ☐ Oxygenates ☐; VOC SOIL 8260 ☐ STD ☐ TCL ☐ PPL ☐ MTBE ☐; TBA ☐ Oxygenates ☐ 5035/LOW ☐ 5035MED ☐; VPH RANGES ☐ TARGETS ☐; EPH RANGES ☐ TARGET (PAH) ☐ DIESEL (PAH) ☐; TPH-CTDEP ☐ TPH418.1 ☒; TPH-MAINE GRO ☐ DRO ☐; TPH-8015 GRO ☐ TPH-8015 DRO ☐; METALS TOTAL ☐ DISSOLVED ☐ HM8 ☐ HM5 ☐; METALS TCLP ☐ SPLP ☐ HM8 ☐ HM5 ☐; TSS / COLOR / TURBIDITY; TOTAL SETTLEABLE SOLIDS; TOTAL LEAD (UNFILTERED)

Accutest Sample #	Field ID / Point of Collection	Collection Date	Time	Sampled by	Matrix	# of bottles	HCL	NaOH	HNO3	H2SO4	MEOH	Encore	Other	None	BTEX 8260	VOC AQUEOUS 8260	TPH-CTDEP	TSS / COLOR / TURBIDITY	TOTAL SETTLEABLE SOLIDS	TOTAL LEAD (UNFILTERED)
-1	INF-GW-92205	9-22-05	13:10	TAN	GW	8	X		X					X	X		X	X	X	X
-2	EFF-GW-92205	9-22-05	13:20			8	X		X					X	X		X			

Turnaround Time (Business days)

- ☐ Std. 10 Business Days
- ☐ 8 Day RUSH
- ☒ 5 Day RUSH
- ☐ [redacted]ENCY
- ☐ 2 Day *EMERGENCY*
- ☐ 1 Day EMERGENCY

Approved By:/Date: T.A. Nawn

Emergency T/A is for FAX or Lablink Data

Data Deliverable Information

- ☐ Commercial "A"
- ☐ Commercial "B"
- ☐ Full Deliverables
- ☐ Other
- ☐ FULL CLP
- ☐ State Forms
- ☐ Disk Deliverable Format _____

Site Specific: QC Yes ☐ No ☐ If yes, indicate QC sample in Comments and submit triplicate volume.

Comments / Remarks

PRCD - PRESUMPTIVE CERTAINTY
ALL DETECTION LEVELS BELOW GW-1

LOC, 11E, 4E, 5C, 3F6

Sample Custody must be documented below each time samples change possession, including courier delivery.

Relinquished by Sampler:	Date Time:	Received by:	Relinquished by:	Date Time:	Received by:
1. Tim Milner	9/22/05 16:40	1 Thomas Sweeney	2		2
Relinquished by: 3	Date Time:	Received by: 3	Relinquished by: 4	Date Time:	Received by: 4
Relinquished by: 5	Date Time:	Received by: 6	Seal #	Received w...	On ice ... Temp ...

New England
ACCUTEST
Laboratories

10/19/05

Technical Report for

Exxon Service Station

CDM:S/S 3-5805 1425 Massachusetts Ave., Boxborough, MA

PO#4506003635 WBS#08

Accutest Job Number: M51386

Sampling Date: 10/04/05

Report to:

Camp, Dresser & McKee

HimmelDB@cdm.com

ATTN: Dana Himmel

Total number of pages in report: 11

ACCREDITED IN ACCORDANCE WITH nelac

Test results contained within this data package meet the requirements of the National Environmental Laboratory Accreditation Conference and/or state specific certification programs as applicable.

Reza Tand
Lab Director

Certifications: MA (M-MA136) CT (PH-0109) NH (250204) RI (00071) ME (MA136) FL (E87579) NY (23346) NJ (MA926) NAVY USACE

This report shall not be reproduced, except in its entirety, without the written approval of Accutest Laboratories.

DUPLICATE RESULTS SUMMARY
GENERAL CHEMISTRY

Login Number: M50976
Account: EXXONSS - Exxon Service Station
Project: CDM:S/S 3-5805 1425 Massachusetts Ave., Boxborough, MA

Analyte	Batch ID	QC Sample	Units	Original Result	DUP Result	RPD	QC Limits
Color, Apparent	GN17898	M50976-2	CU	<5	<5	0.0	0-20%
Petroleum Hydrocarbons	GP5984/GN17906	M50936-1	mg/l	<0.61	<0.61	0.0	0-20%
Solids, Settleable	GN17899	M50976-1	ml/l/hr	<0.10	<0.10	0.0	0-20%
Solids, Total Suspended	GN17905	M50976-2	mg/l	<4.0	<4.0	0.0	0-20%
Turbidity	GN17900	M50976-2	NTU	<0.50	<0.50	0.0	0-20%

Associated Samples:
Batch GN17898: M50976-1, M50976-2
Batch GN17899: M50976-1, M50976-2
Batch GN17900: M50976-1, M50976-2
Batch GN17905: M50976-1, M50976-2
Batch GP5984: M50976-1, M50976-2

MATRIX SPIKE RESULTS SUMMARY
GENERAL CHEMISTRY

Login Number: M50976
Account: EXXONSS - Exxon Service Station
Project: CDM:S/S 3-5805 1425 Massachusetts Ave., Boxborough, MA

Analyte	Batch ID	QC Sample	Units	Original Result	Spike Amount	MS Result	%Rec	QC Limits
Petroleum Hydrocarbons	GP5984/GN17906	M50936-2	mg/l	<0.61	5.1	5.2	102.0	75-125%

Associated Samples:
Batch GP5984: M50976-1, M50976-2

Misc. Forms

Custody Documents and Other Forms

Includes the following where applicable:

- Sample Tracking Chronicle

Internal Sample Tracking Chronicle

Exxon Service Station

Job No: M50976

CDM:S/S 3-5805 1425 Massachusetts Ave., Boxborough, MA
Project No: PO#4506003635 WBS#08

Sample Number	Method	Analyzed	By	Prepped	By	Test Codes
M50976-1 Collected: 22-SEP-05 13:10 By: TAN Received: 22-SEP-05 By: RS INF-GW-92205						
M50976-1	EPA 180.1	22-SEP-05 17:25	MA			TURB
M50976-1	EPA 160.5	22-SEP-05 17:30	MA			SS
M50976-1	EPA 110.2	22-SEP-05 17:40	MA			COL
M50976-1	EPA 418.1	23-SEP-05	BF	23-SEP-05	BF	PHC
M50976-1	EPA 160.2	23-SEP-05	BF			TSS
M50976-1	EPA 624	26-SEP-05 23:48	AT			V624BTXM
M50976-1	EPA 624	27-SEP-05 11:00	AT			V624BTXM
M50976-1	SW846 6010B	27-SEP-05 11:19	LMN	26-SEP-05	OP	PB
M50976-2 Collected: 22-SEP-05 13:20 By: TAN Received: 22-SEP-05 By: RS EFF-GW-92205						
M50976-2	EPA 180.1	22-SEP-05 17:25	MA			TURB
M50976-2	EPA 110.2	22-SEP-05 17:40	MA			COL
M50976-2	EPA 160.5	22-SEP-05 18:35	MA			SS
M50976-2	EPA 418.1	23-SEP-05	BF	23-SEP-05	BF	PHC
M50976-2	EPA 160.2	23-SEP-05	BF			TSS
M50976-2	EPA 624	27-SEP-05 09:43	AT			V624BTXM
M50976-2	SW846 6010B	27-SEP-05 11:25	LMN	26-SEP-05	OP	PB

Sections: 1 2 3

Table of Contents

-1-

Section 1: Sample Summary 3
Section 2: Sample Results 4
2.1: M51386-1: INF-10405 4
2.2: M51386-2: TB 8
Section 3: Misc. Forms 9
3.1: Chain of Custody 10

Sample Summary

Exxon Service Station

Job No: M51386

CDM:S/S 3-5805 1425 Massachusetts Ave., Boxborough, MA
Project No: PO#4506003635 WBS#08

Sample Number	Collected Date	Time By	Received	Matrix Code	Type	Client Sample ID
M51386-1	10/04/05	10:30 TAN	10/04/05	AQ	Ground Water	INF-10405
M51386-2	10/04/05	08:30 TAN	10/04/05	AQ	Trip Blank Water	TB

Accutest LabLink@56777 08:07 19-Oct-2005

Report of Analysis

Client Sample ID:	INF-10405		
Lab Sample ID:	M51386-1	Date Sampled:	10/04/05
Matrix:	AQ - Ground Water	Date Received:	10/04/05
Method:	SW846 8260B	Percent Solids:	n/a
Project:	CDM:S/S 3-5805 1425 Massachusetts Ave., Boxborough, MA		

	File ID	DF	Analyzed	By	Prep Date	Prep Batch	Analytical Batch
Run #1 [a]	P2140.D	1	10/10/05	AMY	n/a	n/a	MSP73
Run #2							

	Purge Volume
Run #1	5.0 ml
Run #2	

Oxygenates

CAS No.	Compound	Result	RL	Units	Q
994-05-8	tert-Amyl Methyl Ether	2.3	2.0	ug/l	
75-65-0	Tert Butyl Alcohol	551	100	ug/l	

CAS No.	Surrogate Recoveries	Run# 1	Run# 2	Limits
1868-53-7	Dibromofluoromethane	114%		82-127%
2037-26-5	Toluene-D8	99%		88-112%
460-00-4	4-Bromofluorobenzene	110%		80-118%

(a) The pH of the sample aliquot for VOA analysis was >2 at time of analysis.

ND = Not detected
RL = Reporting Limit
E = Indicates value exceeds calibration range

J = Indicates an estimated value
B = Indicates analyte found in associated method blank
N = Indicates presumptive evidence of a compound

Report of Analysis

Client Sample ID:	INF-10405		
Lab Sample ID:	M51386-1	Date Sampled:	10/04/05
Matrix:	AQ - Ground Water	Date Received:	10/04/05
Method:	EPA 625 EPA 625	Percent Solids:	n/a
Project:	CDM:S/S 3-5805 1425 Massachusetts Ave., Boxborough, MA		

	File ID	DF	Analyzed	By	Prep Date	Prep Batch	Analytical Batch
Run #1	E24637.D	1	10/07/05	PB	10/06/05	OP9781	MSE1288
Run #2							

	Initial Volume	Final Volume
Run #1	1000 ml	1.0 ml
Run #2		

BN PAH List

CAS No.	Compound	Result	RL	Units	Q
91-20-3	Naphthalene	ND	5.0	ug/l	

CAS No.	Surrogate Recoveries	Run# 1	Run# 2	Limits
4165-60-0	Nitrobenzene-d5	57%		22-126%
321-60-8	2-Fluorobiphenyl	53%		21-124%
1718-51-0	Terphenyl-d14	50%		24-133%

ND = Not detected
RL = Reporting Limit
E = Indicates value exceeds calibration range

J = Indicates an estimated value
B = Indicates analyte found in associated method blank
N = Indicates presumptive evidence of a compound

Accutest LabLink@56777 08:07 19-Oct-2005

Report of Analysis

Client Sample ID:	INF-10405		
Lab Sample ID:	M51386-1	Date Sampled:	10/04/05
Matrix:	AQ - Ground Water	Date Received:	10/04/05
Method:	EPA 504 EPA 504	Percent Solids:	n/a
Project:	CDM:S/S 3-5805 1425 Massachusetts Ave., Boxborough, MA		

	File ID	DF	Analyzed	By	Prep Date	Prep Batch	Analytical Batch
Run #1	YZ28984.D	1	10/11/05	CZ	10/10/05	OP9803	GYZ1204
Run #2							

	Initial Volume	Final Volume
Run #1	42.3 ml	2.0 ml
Run #2		

CAS No.	Compound	Result	RL	Units	Q
106-93-4	1,2-Dibromoethane	ND	0.012	ug/l	

CAS No.	Surrogate Recoveries	Run# 1	Run# 2	Limits
460-00-4	Bromofluorobenzene (S)	124%		26-158%

ND = Not detected
RL = Reporting Limit
E = Indicates value exceeds calibration range

J = Indicates an estimated value
B = Indicates analyte found in associated method blank
N = Indicates presumptive evidence of a compound

Report of Analysis

Client Sample ID:	INF-10405		
Lab Sample ID:	M51386-1	Date Sampled:	10/04/05
Matrix:	AQ - Ground Water	Date Received:	10/04/05
		Percent Solids:	n/a
Project:	CDM:S/S 3-5805 1425 Massachusetts Ave., Boxborough, MA		

Metals Analysis

Analyte	Result	RL	Units	DF	Prep	Analyzed By		Method	Prep Method
Iron	4180	100	ug/l	1	10/07/05	10/10/05	AC	SW846 6010B [2]	SW846 3010A [3]
Lead	<1.0	1.0	ug/l	1	10/10/05	10/10/05	LMN	EPA 239.2 [1]	SW846 3020A [4]

(1) Instrument QC Batch: MA6325
(2) Instrument QC Batch: MA6332
(3) Prep QC Batch: MP7728
(4) Prep QC Batch: MP7730

RL = Reporting Limit

Report of Analysis

Client Sample ID:	TB		
Lab Sample ID:	M51386-2	Date Sampled:	10/04/05
Matrix:	AQ - Trip Blank Water	Date Received:	10/04/05
Method:	EPA 504 EPA 504	Percent Solids:	n/a
Project:	CDM:S/S 3-5805 1425 Massachusetts Ave., Boxborough, MA		

	File ID	DF	Analyzed	By	Prep Date	Prep Batch	Analytical Batch
Run #1	YZ28985.D	1	10/11/05	CZ	10/10/05	OP9803	GYZ1204
Run #2							

	Initial Volume	Final Volume
Run #1	42.2 ml	2.0 ml
Run #2		

CAS No.	Compound	Result	RL	Units	Q
106-93-4	1,2-Dibromoethane	ND	0.012	ug/l	

CAS No.	Surrogate Recoveries	Run# 1	Run# 2	Limits
460-00-4	Bromofluorobenzene (S)	131%		26-158%

ND = Not detected
RL = Reporting Limit
E = Indicates value exceeds calibration range

J = Indicates an estimated value
B = Indicates analyte found in associated method blank
N = Indicates presumptive evidence of a compound

Misc. Forms

Custody Documents and Other Forms

Includes the following where applicable:

- Chain of Custody

ACCUTEST Laboratories

CHAIN OF CUSTODY

495 TECHNOLOGY CENTER WEST • BUILDING ONE
MARLBOROUGH, MA 01752
TEL: 508-481-6200 • FAX: 508-481-7753

ACCUTEST JOB #: M51386
ACCUTEST QUOTE #:

CLIENT INFORMATION

NAME: CDM
ADDRESS: 50 HAMPSHIRE ST
CITY, STATE, ZIP: CAMBRIDGE, MA
SEND REPORT TO: JON WELCH
PHONE #: 617-452-6332

FACILITY INFORMATION

PROJECT NAME: BOXBOROUGH/EXXON
LOCATION: 1425 MASS AVE
PROJECT NO.: BOXBOROUGH, MA
FAX #:

ANALYTICAL INFORMATION

ACCUTEST SAMPLE #	FIELD ID / POINT OF COLLECTION	COLLECTION DATE	COLLECTION TIME	SAMPLED BY:	MATRIX	# OF BOTTLES	PRESERVATION HCl	PRESERVATION NaOH	PRESERVATION HNO3	PRESERVATION H2SO4	PRESERVATION NONE	PRESERVATION Na2S2O3	VOC 8260	AB 8270	AB 8270 SIM	504 EDB	O&G 1664	PCB 608	METAL w/Hg	HEX CR, TSS & TRL	CYANIDE (TOTAL)			LAB USE ONLY
M51386-1	INF-10405	10-4-5	10:30	TAN	GW	16	X	X	X		X	X	X	X	X	X	X	X	X	X	X			
-2	TB	10-4-5	8:30	RS	GW	2						X				X								

MATRIX CODES

DW - DRINKING WATER
GW - GROUND WATER
WW - WASTE WATER
SO - SOIL
SL - SLUDGE
OI - OIL
LIQ - OTHER LIQUID
SOL - OTHER SOLID

DATA TURNAROUND INFORMATION

- ☐ 14 DAYS STANDARD
- ☐ 7 DAYS RUSH
- ☐ 48 HOUR EMERGENCY
- ☐ OTHER

APPROVED BY:

14 DAY TURNAROUND HARDCOPY. EMERGENCY OR RUSH IS FAX DATA UNLESS PREVIOUSLY APPROVED

DATA DELIVERABLE INFORMATION

- ☐ STANDARD
- ☐ COMMERCIAL "B"
- ☐ DISK DELIVERABLE
- ☐ STATE FORMS
- ☐ OTHER (SPECIFY)

COMMENTS/REMARKS

PO # 4506003635
NOTE: HOLD UNTIL FURTHER NOTICE
Loc: 13B, 1D, 6B, 4F7, 4E

SAMPLE CUSTODY MUST BE DOCUMENTED BELOW EACH TIME SAMPLES CHANGE POSSESION, INCLUDING COURIER DELIVERY

RELINQUISHED BY SAMPLER:	DATE TIME:	RECEIVED BY:	RELINQUISHED BY:	DATE TIME:	RECEIVED BY:
1. [signature]	10-4-05 13:50	1. [signature]	2.		2.
3.		3.	4.		4.
5.		5.	SEAL #	PRESERVE WHERE APPLICABLE ☐	ON ICE ☑ TEMPERATURE 4.1 °C

M51386: Chain of Custody
Page 1 of 2

Reza Tand

From: Himmel, Dana [HimmelDB@cdm.com]
Sent: Wednesday, October 05, 2005 8:21 AM
To: Reza Tand
Cc: Zigmont, James
Subject: RE: Samples (Charlton, Lee, and Boxborough)

Reza,

We would only like the analyses listed in this email. Please ignore the COCs, as we had received spotty information prior. Turns out the EPA only requires these additional parameters to be analyzed for a gasoline site. If you have any further questions, you can reach me at 617-452-6380.

From: Reza Tand [mailto:rezat@accutest.com]
Sent: Tuesday, October 04, 2005 7:33 PM
To: Himmel, Dana
Cc: Zigmont, James; Welch, Jonathan; Molloy, Kevin
Subject: RE: Samples (Charlton, Lee, and Boxborough)

Hi Dana,
After looking at the COC's that we recived,it appears there are more analysis requested than this email,I will call you in the morning to discuss what exactly you need & the T/A that we can offer you.
Thanks,Reza

From: Himmel, Dana [mailto:HimmelDB@cdm.com]
Sent: Tuesday, October 04, 2005 3:05 PM
To: Reza Tand
Cc: Zigmont, James; Welch, Jonathan; Molloy, Kevin
Subject: Samples (Charlton, Lee, and Boxborough)

Reza,

We had put the samples collected for the RGP process on hold, however, at this time, we wish to go ahead and analyze for the following for the influent samples collected today (10/3/05) from Charlton, Lee, and Boxborough:

Parameter	Necessary Detection Limit	Approved Methods
Naphthalene	20 ug/L	610 GC/FID, 625, 610 HPLC, 524.2, 8270D
Ethylene dibromide	0.05 ug/L	618, 504.1, 524.2, 8260C
tert-Butyl Alcohol	none	602, 1666, 8260C
tert-Amyl Methyl Ether	none	602, 8260C
Lead (total recoverable)	1.3 ug/L	Flame Atomic Absorption, ICP, Furnace Atomic Absorption
Iron (total recoverable)	1000 ug/L	Flame Atomic Absorption, ICP, Furnace Atomic Absorption

Please let me know if you have any questions. Thanks.

Dana Himmel

M51386: Chain of Custody
Page 2 of 2

Dilution Factor
NPDES RGP
Boxborough, Massachusetts

Qd	Qd	Qs (7Q10)	DF
gpm	cfs	cfs	
25	0.056	0.02	1.4

Streamflow Statistics Report

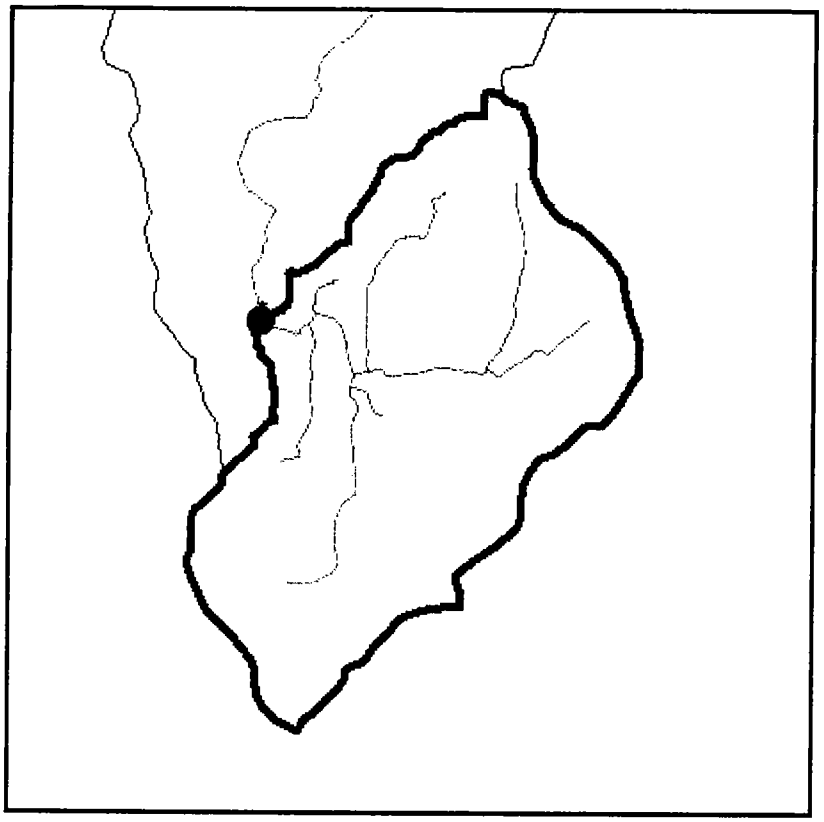

Date: Mon Oct 17 10:52:01 2005
Warning! Drainage Area outside allowable range. Prediction intervals not calculated.
Latitude: 42.4882
Longitude: -71.5398
Measured Basin Characteristics:
Drainage Area (square miles): 1.53
Stratified Drift Area (square miles): 0.12
Stream Length (miles): 4.35
Slope (percent): 2.57
Region: 0

Statistic	Estimated streamflow, ft^3/s	90% Prediction interval	
		Minimum	Maximum
99-percent duration flow	0.01		
98-percent duration flow	0.03		
95-percent duration flow	0.05		

90-percent duration flow	0.10		
85-percent duration flow	0.16		
80-percent duration flow	0.23		
75-percent duration flow	0.33		
70-percent duration flow	0.46		
60-percent duration flow	0.93		
50-percent duration flow	1.48		
7-day, 2-year low flow	0.06		
7-day, 10-year low flow	0.02		
August median flow	0.17		

U.S. Department of the Interior, U.S. Geological Survey
10 Bearfoot Road
Northborough, MA 01532
(508) 490-5000

Maintainer: webmaster@mass1.er.usgs.gov

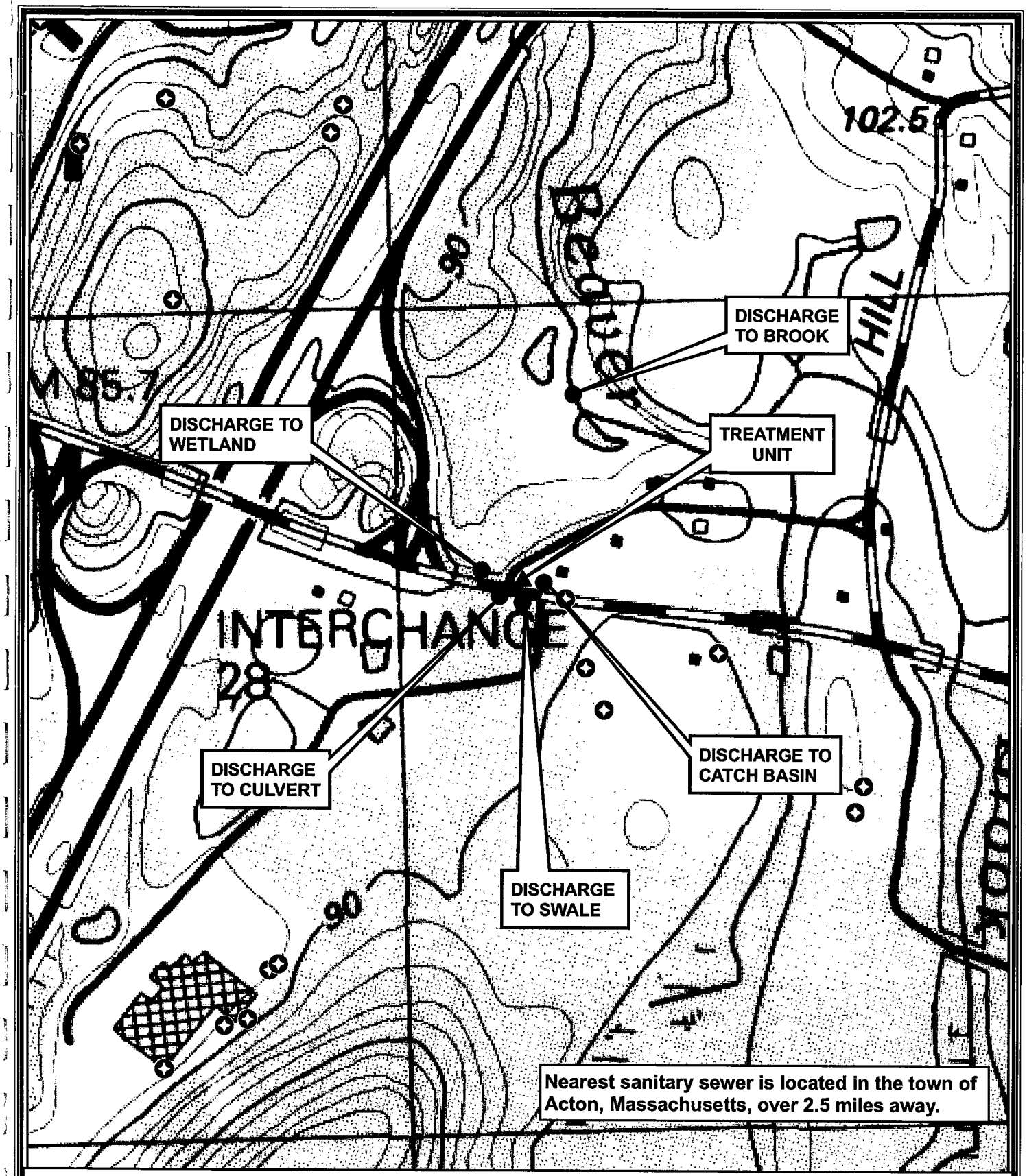

FORMER EXXON SERVICE STATION NO. 3-5805
1425 MASSACHUSETTS AVENUE (RT. 111)
BOXBOROUGH, MASSACHUSETTS

N

0 250 500 1,000 Feet

NOTICE OF INTENT FOR
REMEDIATION GENERAL PERMIT
LOCATION MAP

Legend
Public Water Supply (Wells)

CDM

\\BWSC7\Projects\Boxborough\Boxborough_NOI.mxd LEK 10/2005