AB-1294

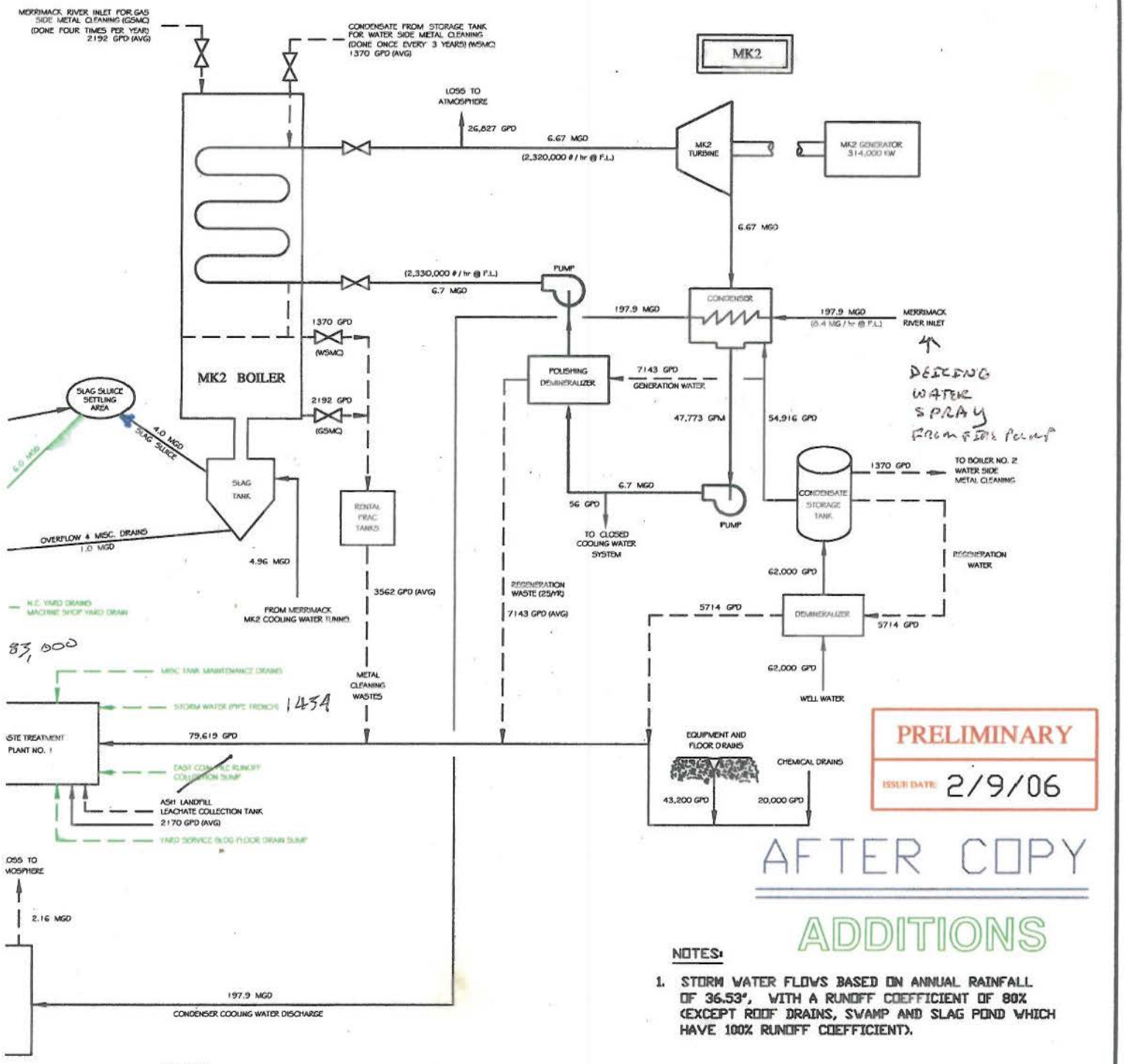

PRELIMINARY

ISSUE DATE 2/9/06

AFTER COPY

ADDITIONS

NOTES:

1. STORM WATER FLOWS BASED ON ANNUAL RAINFALL OF 36.53", WITH A RUNOFF COEFFICIENT OF 80% (EXCEPT ROOF DRAINS, SWAMP AND SLAG POND WHICH HAVE 100% RUNOFF COEFFICIENT).

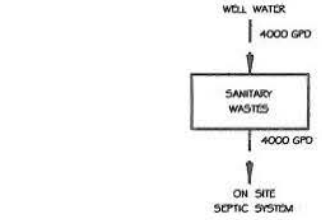

LEGENDS:

MGD = MILLION GALLONS PER DAY
GPD = GALLONS PER DAY

— — — INTERMITTENT FLOW

——— CONTINUOUS FLOW DURING DURING NORMAL STATION ON LINE OPERATION

MERRIMACK RIVER

FLOW

NO.	DATE	DES.	DRN.	APP.	REASON
02					
01					
00	12/05	AAA	JMR	AAA	REMOVED WET LANDS & UPDATED YARD DRAINS

REVISION

Public Service of New Hampshire

GENERAL ENGINEERING DIVISION

ENGR. DATE
DES. DATE
JMR 2/20/03 LAYOUT DATE
DRN. DATE
DAF 2/20/03 CHKD DATE

SCHEMATIC OF WATER FLOW
MERRIMACK STATION

FLD.CK. DATE DRAWING NO. MK-M-1235