3.0 LAND DEVELOPMENT AND CONSTRUCTION

3.1 Introduction

Construction activities, aside from the actual building of structures, typically involve a combination of clearing land, removing vegetation, grading the land surface, excavating earth, removing and importing soil and in some cases rock, installing utilities, installing septic systems or sewer lines, building access roads and driveways, and establishing permanent landscaping.

These construction-related activities have the proven potential to affect water quality in nearby streams, rivers, lakes, ponds, reservoirs and ground water aquifers. Water quality impacts can result from erosion, sedimentation, minor chemical spills and leaks, and pollutants carried in runoff from the site to nearby water bodies. The construction phase of land development can be a significant threat to local water quality particularly because of the area of exposed land, which can contribute large loads of sediment to the site runoff. Significant sediment loads can impair drinking water sources and can inhibit the efficiency of drinking water treatment processes. Sediments from construction sites could also act as vehicles for other available pollutants, such as metals, petroleum-based compounds, and other organic chemicals, that adsorb easily to sediments. Therefore, the most effective way to protect nearby drinking water sources during the construction phase is to keep sediment from moving off-site and from entering any surface water bodies.

Once construction is completed, the newly established land use, such as residential houses, a shopping center, or an office building, can potentially affect water quality by way of the stormwater runoff and infiltration on the site. Surface runoff from roadways and parking areas often includes a combination of pollutants, such as salts from de-icing chemicals, sediment, metals from brake linings, and oils and greases from vehicles. Lawns and gardens can contribute significant amounts of nutrients from fertilizers and bacteria from domestic animal wastes, both of which can threaten water supplies. On-site septic systems can also contribute harmful levels of pathogens, nutrients, salts, detergents, and other contaminants if they are not installed and maintained properly.

Best management practices (BMPs) for the construction industry are designed to reduce the impact of these activities on surface waters. These BMPs can be implemented during the project planning phases, during the construction phase as temporary practices, or during the post-construction phase as permanent practices and installations. Each site is distinct from every other site with respect to the planned uses, the existing conditions, the soil and geology, the climate and the proximity to surface water or ground water resources. These distinct characteristics should be evaluated to determine which combination of BMPs are best suited for the site.

This chapter begins with a brief introduction to site planning, followed by a description of temporary best management practices for use on construction sites and post-

construction permanent best management practices. A short construction site case study example is presented to illustrate some of the best management practices. The chapter concludes with a self-evaluation questionnaire for construction site managers, land developers and other interested parties.

3.2 Site Planning

The potential impacts of construction and development within a watershed can be greatly reduced through better site design. Once a site has been chosen for development, and the type of development (i.e., commercial, residential, industrial, agricultural, etc.) has been determined, there are many techniques that can be incorporated into the design of the site that can reduce potential negative impacts on surrounding resources. Better site design can be implemented by striving for three goals at each individual site: reducing the amount of impervious cover, increasing the natural lands set aside for conservation and using pervious areas for more effective stormwater treatment. The following methods are adapted from the Center for Watershed Protection "Better Site Design: A Handbook for Changing Development Rules in Your Community" (CWP, 1998).

These goals can be reached by implementing one or a combination of appropriate techniques that fall into three broad areas:

- Residential streets and parking lots
- Lot development
- Conservation of natural areas

Each site, with its individual location, size, use, proximity to important natural resources, climate, soil and hydrology, will dictate which techniques are appropriate. In addition, local zoning bylaws may require or possibly even prohibit the use of certain techniques. A list of these techniques is provided below.

1. Reduce residential street width by designing for expected traffic volumes.
2. Reduce residential street length by examining alternative street layouts to maximize the number of homes served per unit length of road.
3. Reduce residential right-of-way widths to minimum possible, while still accommodating all needs.
4. Minimize cul-de-sacs and use alternative layouts such as a horseshoe with landscaping where possible.
5. Use vegetated open channels to convey and treat stormwater in street rights-of-way when possible.
6. Reduce the parking ratio for residential, transit and other parking as much as possible.
7. Reduce parking lot imperviousness through more efficient design, using alternative pervious paving surfaces in spill-over parking areas.
8. Share parking areas with other users and use parking structures instead of open space.

9. Integrate stormwater treatment into parking lot design and landscaping.
10. Incorporate open space into site design.
11. Minimize driveway length.
12. Design common walkways to connect pedestrian destinations and provide sidewalks only on one side of the road where practical.
13. Use shared driveways and alternative pervious surfaces in developments.
14. Specify a legal sustainable entity to continually manage open space and recreation.
15. Direct rooftop runoff to pervious areas.
16. Maintain buffers along streams, including the 100-year flood plain, steep slopes and wetlands.
17. Repair and maintain riparian buffers.
18. Minimize the amount of clearing and grading of sites being developed.
19. Conserve trees and native vegetation and plant additional trees post-development.
20. Provide off-site mitigation for on-site environmental impacts to support local watershed and environmental management plans.
21. Avoid allowing stormwater to discharge directly into wetlands and other sensitive resource areas.

This conceptual design shows how impervious surfaces can be creatively reduced through site planning
(Source: Robert W. Droll, 1998)

Further information about these techniques and related federal, state and local regulations can be accessed through the EPA Web site (www.epa.gov), The Center for Watershed Protection web site at www.cwp.org, or by contacting the state environmental agency or the local community land use planning or conservation commission.

Broader scale land use planning is necessary to determine what areas should be developed versus conserved, and for what purpose. These techniques can also reduce impacts to streams, rivers, ponds, ground water, and other resources. For example, when given a choice between development adjacent to a river versus 500 yards from a river, land use planning principles would suggest choosing the development further away from the river to maintain a buffer around this sensitive resource areas.

3.3 Construction Site Best Management Practices

The construction phase of development is generally the most damaging to aquatic environments. Often during the construction phase, for example, more land is cleared for access than is necessary, therefore exposing excessive amounts of soil and sediment, removing wildlife habitat, and destabilizing the land surface. An erosion and sediment control (E&SC) plan can help to reduce the impacts of the construction phase on surrounding resources. Many states, including Massachusetts, Maine, Maryland, New York, and New Hampshire for example, have developed Handbooks of Erosion and Sediment Control techniques that can be used as a reference. However, many such handbooks include "cook book" references compiled from other sources that do not necessarily address the specific conditions of each individual site. Therefore, it is important to adapt the most effective and appropriate E&SC practices to the characteristics of the particular site.

E&SC Practices

Effective erosion and sediment control techniques are referred to as BMPs. Descriptions of several of the more common and effective erosion and sediment control BMPs for the construction phase are provided below. This information was compiled from various sources, including the Center for Watershed Protection (CWP, 2000), the Massachusetts Erosion and Sediment Control Guidelines (MA EOEA et al., 1997), and the Stormwater Management and Erosion and Sediment Control Handbook for Urban and Developing Areas in New Hampshire (NH DES et al., 1992).

Erosion control practices:

- ***Seeding.*** Grass that is well established on a slope is the most effective erosion control practice, and can be used for either permanent or temporary control. The success of seeding is limited by dry or cold weather and in areas of infertile soil, where it is more difficult for the seeds to establish. On most slopes, a surficial cover is also required to keep the seeds in place.

- ***Mulching.*** Mulching refers to the use of straw, hay, bark or a bark/compost combination spread on the land surface. It can be used as a protection for seeds or alone as a temporary erosion control. Straw mulch should be avoided on slopes greater than 20 percent and bark/compost mulch should be avoided on slopes

greater than 40 percent. Because straw and hay mulch are lightweight, this type of mulch must be secured to the soil surface.

- ***Blankets*.** Blankets are used to protect seeds and prevent erosion on steep slopes where mulch can be ineffective. Drawbacks of blankets are that they are more complicated and time consuming to install, and typically more expensive than mulch and seeding.

- ***Plastic Sheeting*.** This practice provides effective erosion control for small areas (less than 2,000 square feet), but should only be used temporarily. The plastic does not allow infiltration of runoff, and the edges must be properly weighed down to avoid runoff leaking in underneath the sheeting.

- ***Sodding*.** This can be a very effective erosion control mechanism because it provides immediate vegetative cover, but it is important to assure that soils are nutrient-rich and moist enough to support establishment of the vegetation. When conditions are appropriate, sodding can also be used to convey open channel stormwater flows. The major drawback to sodding is the generally high expense.

Sedimentation control:

- ***Silt fence or super silt fence*.** Silt fences are widely used for sediment control in construction areas, but are often improperly installed and/or maintained. Proper installation requires support posts driven at least 16 inches into the ground, stakes placed at most eight feet apart, embedded trenches lined with geotextile material upstream of the fence, maintenance of a ten-foot buffer between the fence and all construction activity, use of one continuous sheet of fencing material to avoid joint failure, and finally, installing the fence along topographic contour lines, not simply along the property boundaries. Anchors can be used to hold the bottom of the silt fence fabric (geotextile) in place. When properly installed and maintained, silt fences alone can be somewhat effective at controlling sedimentation from construction sites. However, they can be significantly improved by utilizing high-quality geotextiles and reinforcements, such as a chain link fence or hay bales, to establish "super silt fences." Regular maintenance and repair of the silt fences, including after every ½-inch rain storm, and removal of sediment when it builds up behind the fence is essential for the effective function of the silt fence.

An improperly sited and poorly maintained silt fence (top) versus a super silt fence reinforced by chain link fencing (both)
(Source: CWP, 2001)

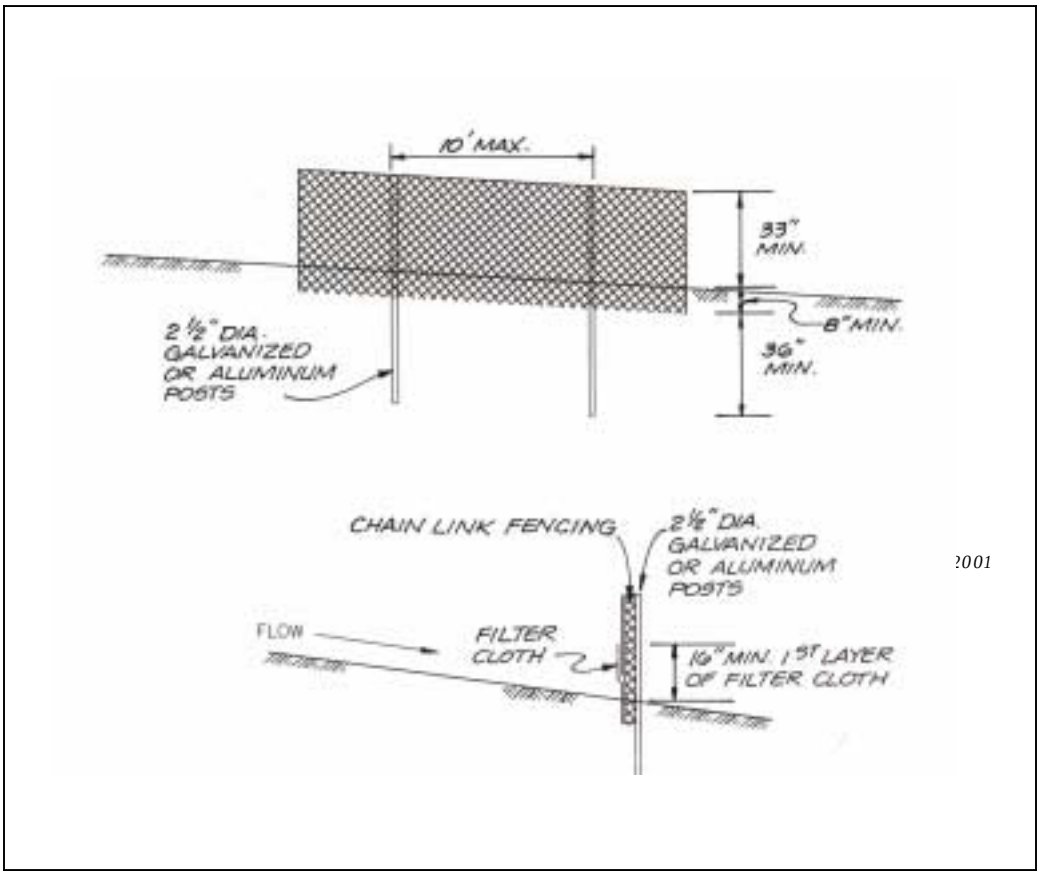

Schematic drawing of the "super silt fence"
(Source: CWP, 2000)

- ***Sediment traps and basins.*** These practices are used where other sediment controls are not possible or effective to prevent off-site sedimentation. Sediment traps are generally smaller than basins, used for areas smaller than 5,000 square feet, and sediment basins can be used for larger drainage areas, up to 100 acres in some cases (MA EOEA et al., 1997). Sediment traps and basins can be realistically expected to remove up to 80 or 90 percent of sediments from construction site runoff (CWP, 2001, pg. 338). They function by detaining runoff from the site and allowing enough time for the sediment to settle out of the water column before water is released from the site. Some of the water can be infiltrated into the ground as well. The size of the basin is usually determined based on a ratio of cubic feet of storage per contributing acre for a two-year storm, and a minimum length to width ratio of approximately two. An emergency spillway allows runoff from a ten-year storm to escape the basin to avoid overflow and erosion during large storms, and a trash hood on the riser prevents clogging (trash and debris should be removed regularly). Currently, the most

effective sediment basins utilize floating skimmers or an increased storage volume to provide both wet and dry storage (CWP, 2001, pg. 338).

Typical example of a sediment trap used during the construction of a commercial office park
(Source: CWP, 2001)

- ***Inlet protection*.** Sediments in runoff from construction sites can quickly clog storm drains and inlets, so many states require or recommend protecting storm drain inlets from sedimentation. Inlets are protected by trapping the sediment before it reaches the inlet or by constructing a temporary barrier around the inlet that either filters the runoff before it enters the inlet or allows some settling to occur before the runoff enters the inlet. This practice should only be used in conjunction with other practices and should not be relied upon as the primary sediment control to protect storm drain systems. Generally, inlet protection practices work better under lower flow conditions, but different techniques can be used in high flow locations. Hay bales or silt fencing can be placed around inlets to filter out sediments, the area around an inlet can be excavated to allow for runoff detention and settling of sediments before the runoff reaches the inlet, or in areas where truck traffic may pass over the inlet, a wire mesh filter can be placed over the inlet and covered by gravel to provide filtration. As with the other practices, any inlet protection technique requires routine maintenance and removal of sediment build-up.

Runoff from a construction site entering a storm drain inlet illustrates the need for inlet protection
(Source: Center for Watershed Protection, 2001)

An example of inlet protection
(Source: Center for Watershed Protection, 2001)

- ***Project phasing.*** By constructing a project in phases, the amount of sediment exposed at any one time is significantly reduced, which in turn reduces the erosion and sedimentation occurring at any point in time. The success of phased construction depends on carefully developing a detailed phasing plan early on, and then following it closely. Each phase will cover a separate section of the site and will require a separate construction access way and stormwater practices to

collect, convey and treat runoff as necessary. Project phasing can be especially effective at large-scale project sites.

Critical Elements of an E&SC Plan

Rather than specify which techniques are most appropriate for which combination of site characteristics, this handbook will provide guidance to help the developer or construction engineers shape an effective E&SC plan. There are ten critical elements to an effective E&SC plan (CWP, 2000). They are as follows:

1. Minimize needless clearing and grading
2. Protect waterways and stabilize drainage ways
3. Phase construction to limit soil exposure
4. Immediately stabilize exposed soils
5. Protect steep slopes and cuts
6. Install perimeter controls to filter sediments
7. Employ advanced sediment settling controls
8. Certify contractors on E&SC plan implementation
9. Adjust E&SC plan at construction site
10. Assess E&SC practices after storms

Keys to Success: Implementation, Maintenance, Inspection

The success of an E&SC plan not only depends on developing the plan, but making sure the plan is properly implemented and routinely maintained throughout the construction phase. Several recent studies indicate that E&SC plans often fail to meet their performance goals for a variety of reasons, including: incomplete implementation of the plan, inadequate inspection of installed techniques, inadequate maintenance of techniques, inadequate training of site workers and inspectors in E&SC techniques, and inadequate review of E&SC plans prior to approval and implementation (CWP, 2000).

3.4 Post-Construction Best Management Practices

Permanent BMPs should be installed during construction to address potential environmental impacts from the ongoing daily activities on the built site. The potential environmental impacts of various developments range from polluted drinking water sources or degraded wildlife habitat to an increased frequency of flooding or a reduction in ground water levels. These impacts can be reduced by addressing four categories of environmental concerns or criteria. These categories are as follows:

1. Ground water recharge criteria
2. Water quality criteria
3. Channel protection criteria
4. Overbank and extreme (100-yr. frequency) flood protection criteria

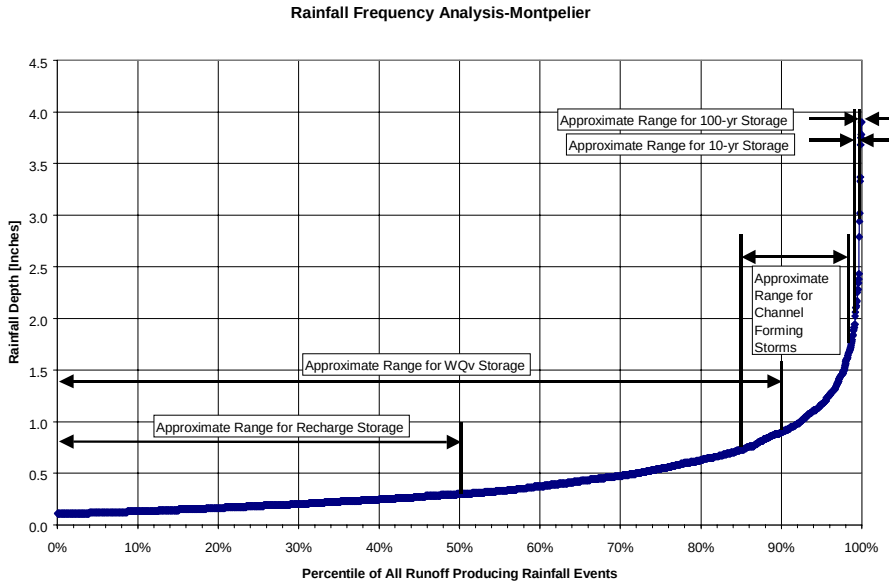

Rainfall frequency analysis indicating the stormwater criteria at critical frequencies
(Source: VT ANR, 2002)

Small storms produce smaller volumes of runoff but are significantly more frequent than larger storms. The runoff management goals associated with small storms are recharge of precipitation and small amounts of runoff, and storage of runoff for water quality treatment. Larger storms, those in the highest percentile of storm frequency, are much less frequent and present a different set of runoff concerns. Runoff from larger storms, considered the channel forming storms, contribute to more severe erosion problems than smaller storms. The range of stormwater management options is presented in the figure above. The stormwater recharge and water quality criteria generally focus on the more frequent smaller storms and the channel protection and overbank and flood protection criteria apply to larger storms with a much larger runoff volume.

A comprehensive set of post construction BMPs should be designed to address those criteria that apply to the particular site. Because each site is different, not all of the criteria may apply to every site. For example, a coastal construction site might require that water quality criteria and recharge criteria be addressed, but may not need to address channel protection or flooding because runoff discharges directly to a coastal water body.

Ground water recharge criteria. Construction and development generally increases the amount of surface area that is pervious versus impervious on a site. BMPs should be utilized to maximize the amount of infiltration and ground water recharge of stormwater. This will help to maintain the natural water table elevation so that the ground water resources can continue to provide water for streams and drinking water and other needs. Pervious surfaces allow stormwater to infiltrate into the ground and eventually to recharge the ground water, which may provide base flow to streams or drinking water to nearby communities. Impervious surfaces, such as pavement, roofs, porches, and compacted soils limit infiltration. The implications of diminished ground water recharge on streams include lower dry weather flows, poorer water quality of streams during low flows, and increased stream temperatures.

Water quality criteria. The amount of pollutant load delivered by urban stormwater runoff is a function of the amount of imperviousness in an urban area. The pollutants associated with urban runoff are sediment, nutrients (phosphorus and nitrogen), metals, pesticides and herbicides, bacteria, hydrocarbons, and increased stream temperature. These pollutants can impact urban water bodies in a number of ways. Toxicity tests have shown that urban stormwater kills test organisms in eight to ten days (CWP, 2000). Sediment delivered in urban runoff can smother aquatic habitat and reduce the storage capacity of lakes and reservoirs. Other pollutants, often metals, adsorb onto sediments and are delivered with the sediment to the receiving water. Oils and greases, which are toxic to humans and other biota, can also smother aquatic habitat and, as they degrade, can reduce oxygen concentrations available for aquatic organisms. Excessive amounts of nutrients can lead to algal blooms, which lead to fish kills, odor and taste problems, and human health risks from drinking and swimming in the water. Bacteria are a problem because they threaten human health and the health of many aquatic and terrestrial biota. Bacteria are often associated with other pathogens such as viruses and can threaten the fishable/swimmable status of a water body.

There are several stormwater treatment practices that can be installed in a newly developed or retrofitted site. These practices fall into six general categories: ponds, wetlands, infiltration, stormwater filters, open channels, and other practices. These practices can be used alone or in combination with one another, depending on the specific conditions of the site.

- ***Ponds*.** Ponds are used to detain runoff during storms and then allow pollutants to settle out. Some ponds are wet ponds, meaning they retain a certain amount of water permanently, and some detain water for the purpose of infiltrating it into the ground. Some pond designs include a micro-pool extended detention pond, a wet pond, wet extended detention pond, and a pocket pond.

Example of a wet retention pond
(Source: Maryland Department of the Environment, 1999)

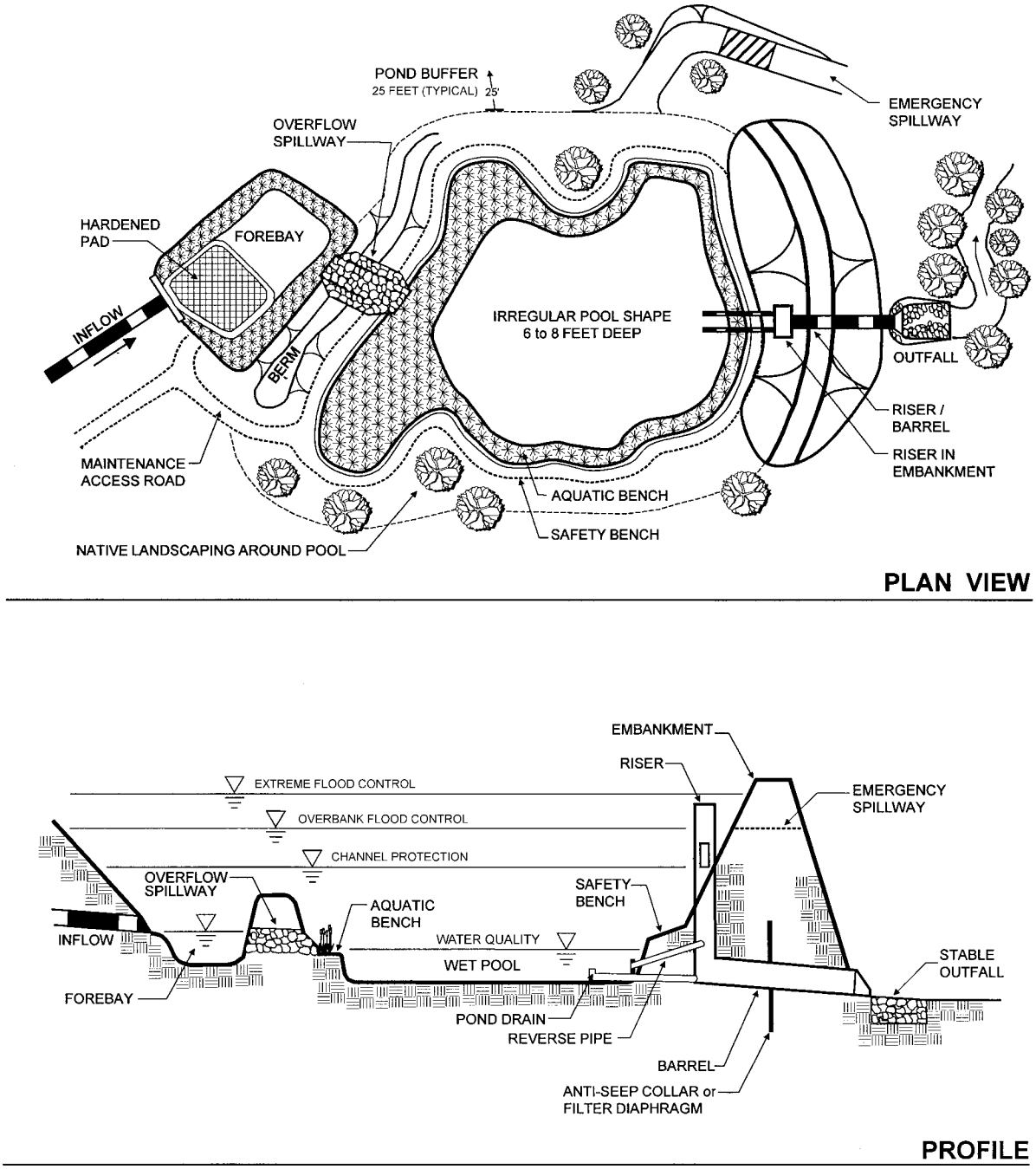

Schematic illustration of wet pond
(Source: VT ANR, 2002)

- ***Wetlands*.** Wetlands are used to detain runoff, slow the velocity enough to allow settling, and provide a certain level of filtration and pollutant uptake as well, by means of the vegetation. Wetlands are more effective in residential developments than in industrial areas where the toxicity in the runoff may actually threaten the wetland vegetation. Wetland options for urban runoff include shallow marsh, extended detention wetlands, pond/marsh systems, and pocket wetlands. Two wetland designs are presented below.

Example of a constructed stormwater wetland
(Source: Galli, 1997)

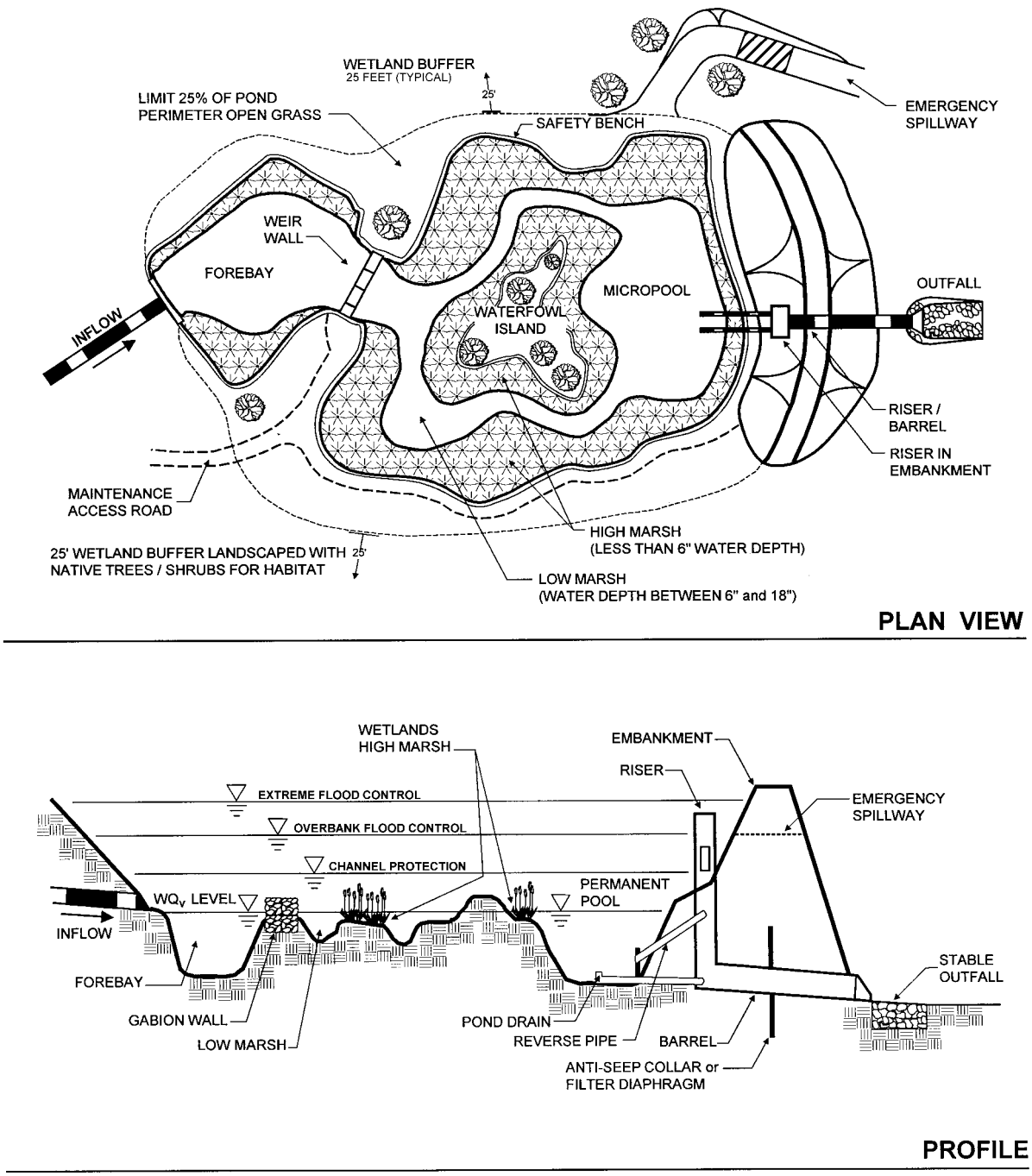

Schematic illustration of a constructed stormwater wetland
(Source: VT ANR, 2002)

- ***Infiltration*.** Infiltration mechanisms such as infiltration trenches or basins are helpful when the main concern is putting water back into the ground to recharge the ground water. This practice also provides a certain level of filtration as the runoff water passes through the soil. The photo below is an example of an infiltration trench in practice.

Example of infiltration trench with grass channel pretreatment
(Source: Claytor, 2000)

- ***Filtration*.** Stormwater filters make up a general category of runoff treatment practices that are effective in removing a wide variety of pollutants, such as bacteria, sediment, nutrients, and metals, depending on the design. The design of filters range from sand filters to organic filters to bioretention filters. Organic filters and bioretention filters rely on vegetation to take up nutrients and metals that are often dissolved in the runoff, and also slow the water to filter out particulate matter. Sand filters are more effective in removing just the particulate matter in the runoff, such as bacteria, suspended sediments, and associated adsorbed metals.

Example of surface sand filter (F-1)
(Source: CWP, 2001)

Example of perimeter sand filter
(Source: MDE, 1999)

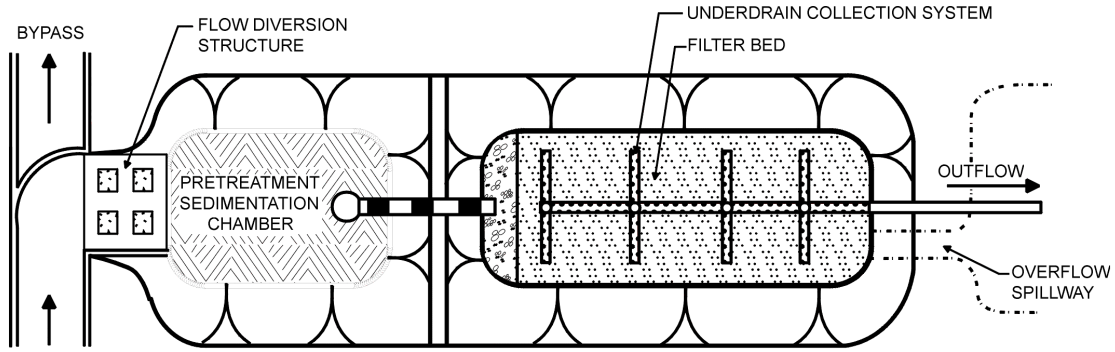

PLAN VIEW

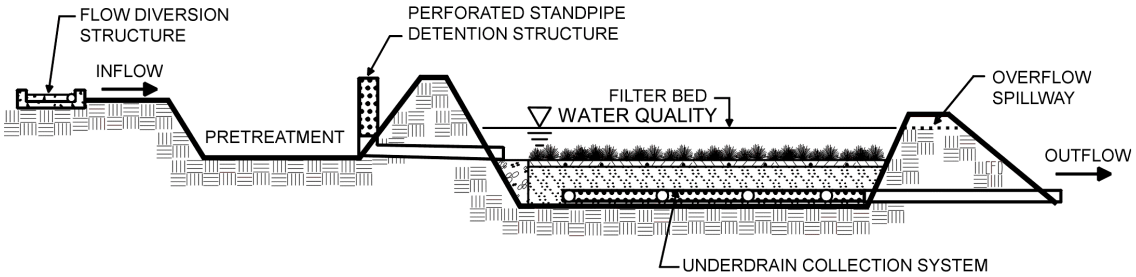

PROFILE

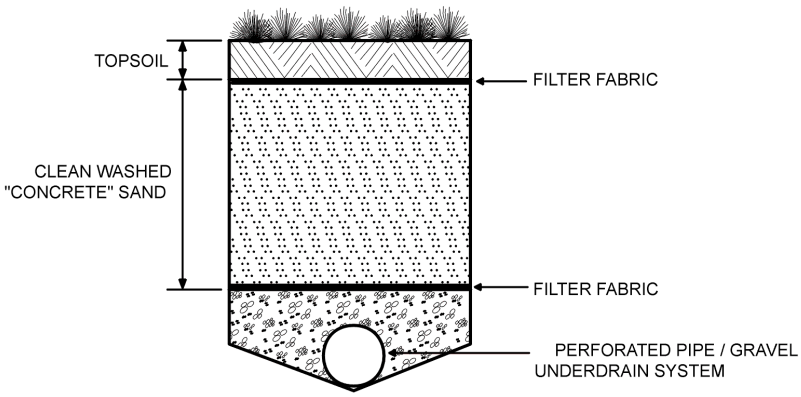

TYPICAL SECTION

Schematic illustration of a surface sand filter
(Source: VT ANR, 2002)

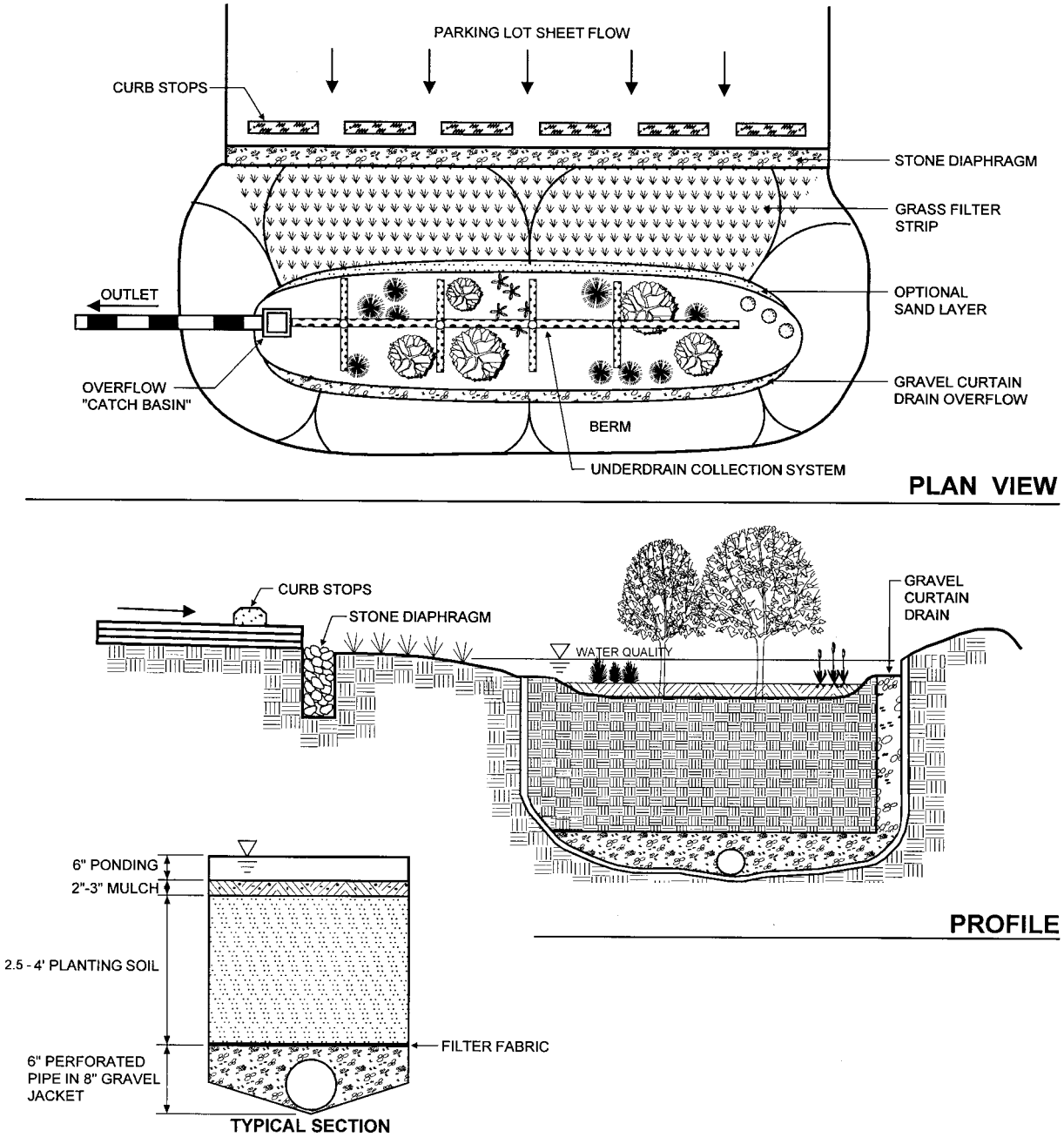

Example of bioretention
(Source: VT ANR, 2002)

- ***Open channels*.** Open channels, including both wet and dry swales, provide a designated means of delivering stormwater while filtering out some level of suspended sediments at the same time. However, swales generally should be used in conjunction with other practices in order to assure effective pollutant removal from the runoff. They depend on adsorption and settling to remove pollutants so they are not effective in removing dissolved nutrients and bacteria, and only partially effective in removing metals.

Example of dry swale
(Source: Claytor, 2000)

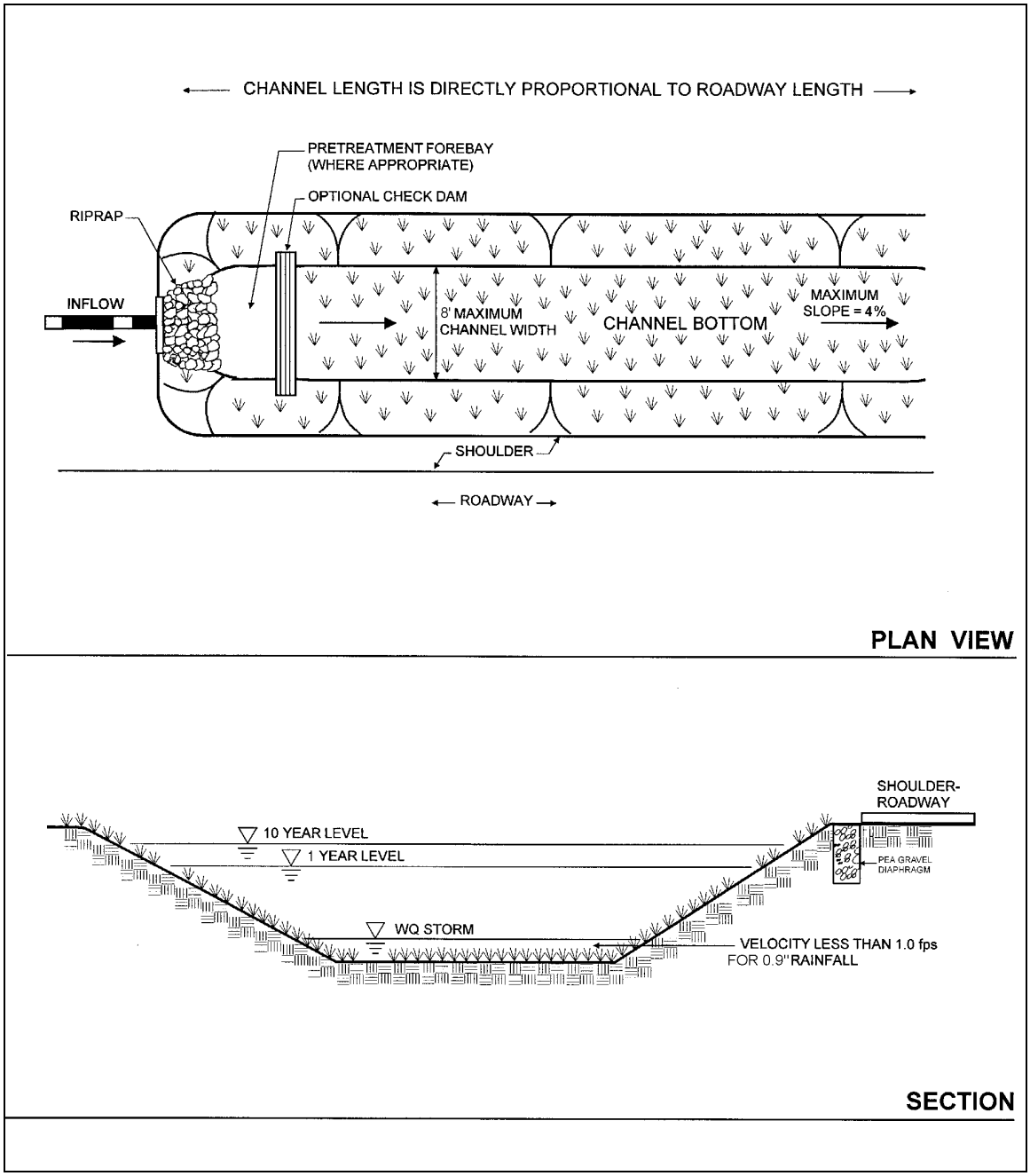

Schematic illustration of open grass channel
(Source: VT ANR, 2002)

- *Other devices.* Several manufactured products have been produced to treat stormwater runoff from urban areas. These are collectively called "proprietary devices." Their capabilities to remove pollutants depends on the design specifics, the type of site and pollutant load. In general, proprietary devices cannot meet all of the design criteria discussed previously. They are particularly applicable for retrofit situations or as pretreatment for other treatment practices.

Channel and streambank/shoreline protection criteria. Disruptions in natural stream channel morphology are primarily due to changes in stream hydrology, i.e., the volume and flow rate of water flowing through the stream channel. An increase in runoff produced by an increase in impervious surfaces within a watershed can contribute to a change in stream hydrology. Potential changes in the stream channel morphology include: channel widening and downcutting, increased streambank erosion, shifting sediment bars, imbedding stream sediments, and destruction or inadequacy of past streambank stabilization and channelization projects. These changes can change the stream habitat and threaten properties adjacent to the streams by means of erosion and potential shifts in the stream channel. An increase in runoff can also cause erosion along lake and reservoir shorelines, which can increase the sediment loading to the water body. Sedimentation can increase turbidity of the water, carry other pollutants to the water body, and threaten the natural aquatic habitat.

The increase in impervious area typically associated with urban development can contribute to an increase in stream bank erosion and instability. As described earlier, development often increases the volume and velocity of urban runoff, and this in turn leads to increased channel and streambank erosion. The available practices to minimize erosion in streams, stabilize stream banks and/or restore eroded stream banks fall into two general categories: structural and bioengineered (Brown, 2000). Each site should be evaluated to determine which practices are best suited to the specific stream conditions.

This river exhibits the effects of bank erosion
(Source: Claytor, 2000)

Among the structural stabilization practices are imbricated rip-rap, gabions, concrete, masonry, boulder revetments, rootwad revetments, lunkers and A-jacks. Some of these practices require a little further explanation. Imbricated rip-rap is a series of large, relatively flat boulders stacked one on top of another like a stone wall along an entire streambank. Gabions are PVC-coated wire fencing formed into large baskets and filled with small stones. Once in place, soil is used to filled in behind the structure. These are used to form the structural base for stream banks, shoreline banks, or as bank revetments along highways, roads, or other steep sites. Lunkers were originally designed for trout habitat enhancement but have proven to work well as bank stabilization devices as well. They are basically two planks, one about a foot above the other, with wooden spacers between them. The whole unit is placed under the former streambank to the height of a stream's low flow channel, and covered with stones to form a reinforced bank. A-jacks are a commercially produced device consisting of three two-foot long cement stakes joined in the middle and then interconnected with other A-jacks to form a stable bank. They are supported by stones, geotextile materials of coir fibers between the stakes.

The bioengineered practices include coir fiber logs and live fascines. Coir fiber logs are rolls of tightly bound coir (coconut) fiber installed along a streambank using wooden stakes. Live fascines are bundles of live willow, alder or dogwood branches similarly installed along a streambank. These species can regenerate from branch cuttings, so they can eventually take root and further stabilize the bank.

Example of stream channel stabilization using rootwads
(Source: Brown, K., 2000)

Example of stream channel bank stabilization using imbricated rip-rap
(Source: Brown, K., 2000)

Example of stream channel stabilization using lunkers
(Source: Brown, K., 2000)

Overbank and extreme (100-yr. frequency) flood protection criteria. Construction and development can dramatically increase peak discharges in urban streams. An increase in impervious surfaces reduces the volume of water that infiltrates into the ground and increases the travel time and velocity for runoff reaching the stream channel. As a result, the extent (surface area) and frequency of overbank and extreme floods can increase dramatically. The current practice in most states is to maintain the surface runoff volumes for 2-year and 10-year frequency storms at the pre-developed or existing condition. In other words, a developer must evaluate the amount of runoff created from a 2-year or 10-year storm prior to the development and then manage the post-development runoff volume so that it is equal or less.

3

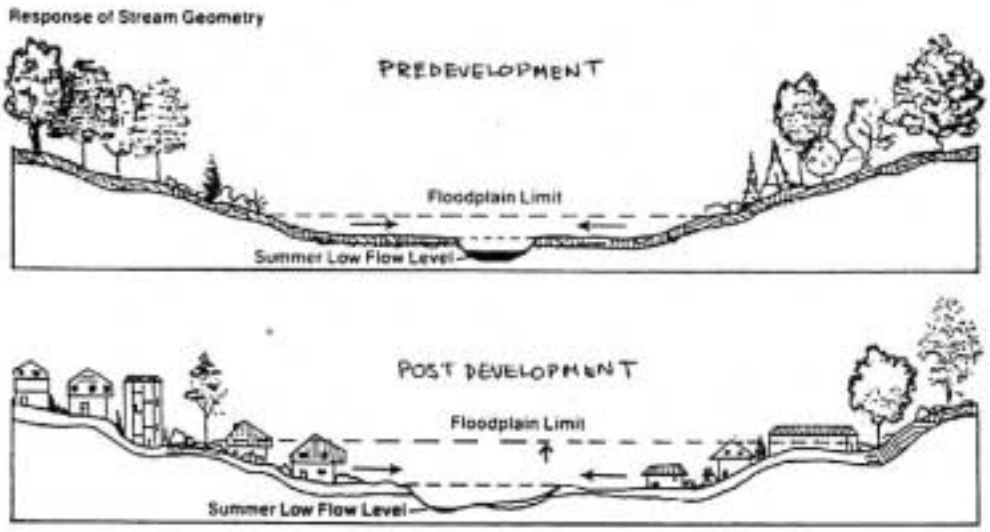

The flood plain elevation can be significantly increased by development in the natural flood plain
(Source: Schueler, 1987)

3.5 Case Study: Cabins to Castles, Denmark, Maine Residential Shoreline Development

a) Background

Cabins to Castles is an active participant in the Maine Department of Environmental Protection's Non-Point Source Training Program for contractors. This voluntary certification program encourages construction contractors to design and install erosion and sediment controls on construction sites. High erosion and sedimentation rates can degrade surface drinking water supplies by increasing turbidity and phosphorous concentrations.

Cabins to Castles assists residential property owners in solving erosion problems on their lake shoreline property. As part of its services, Cabins to Castles designs and builds preventive erosion control practices. For areas drastically affected by erosion due to road run-off, Cabins to Castles also installs more extensive practices such as road drainage turn-offs, silt fences, and flow dissipation devices that intercept soil before it reaches a stream or lake.

Management Measures Applied to Cabins to Castles

BMP: ***Install Erosion Control Technology***

Performance: The shoreline of Long Lake in Bridgton, Maine, was rapidly eroding (see below) and was targeted for a shoreline stabilization project with the help of Cabins to Castles to mitigate sedimentation into the Lake. The company installed silt fencing along the lake shoreline and along the top of an eroding bank to prevent soil that might become dislodged from the top or face of the bank from washing into Long Lake. Once the frames of gabion baskets were assembled along the toe of the bank, non-woven geotextile was installed behind the baskets to prevent soil from backfilling the assembly and migrating towards the surface water. Gabion baskets are configurations of wood frame and wire netting that are filled with 4- 8 inch washed rock to form a physical barrier at the bottom of an eroding bank. They are designed to function as a soil barrier when installed with a non-woven geotextile barrier. When installed in areas of high wave energy, the system allows water exchange through the openings and absorbs wave energy instead of deflecting it. Finally, once loam was applied on top of the eroded face of the bank, an erosion control blanket was installed to stabilize the loam and prevent its erosion into the lake.

Geotextile is wrapped at the back of baskets to prevent soil particles from migrating into baskets.

BMP: ***Establish Vegetated Buffers***

Performance: To complete the erosion control strategy for its shoreline stabilization project, Cabins to Castles planted native vegetation along the top of the gabion baskets, the face of the bank, and the top of the slope to buffer the shore zone. Planting native vegetation on shoreline slopes and banks can help stabilize the sediments and help prevent surface sediment from washing into lakes and streams during rainstorms. In addition, vegetation can absorb pollutants such as fertilizers and pesticides that may be present in runoff from lawns and gardens. These pollutants can cause water quality problems that include algae growth, low oxygen levels that can kill fish, and high concentrations of chemicals that are unhealthy for humans to drink. During the planting process, mulching or blankets are often needed to keep soils in place until vegetation is established.

BMP: ***Establish Walkways to Prevent Foot Traffic in Erosion-Prone Areas***

Performance: Access down the shoreline to the water was provided via a walkway and stairs constructed above ground. This pathway was located strategically to provide useful access to the water while maintaining foot traffic off the newly constructed bank and planted vegetation.

c) Conclusions

Because surface drinking water supplies in Maine often serve also as recreational areas for activities such as boating and fishing, these lake regions are very attractive for real estate development. This development, along with seasonal fluctuations of water levels throughout the year and steep shorelines often found in Maine, results in excessive amounts of sediment and nutrient loading to the lakes. This can lead to poor water quality and impair the use of the lakes for drinking water, swimming and fishing. By implementing erosion control techniques during and after construction, companies can reduce sedimentation and harmful runoff to these resources, thereby protecting the quality of drinking water supplies.

d) Additional Resources

Cabins to Castles, Inc.
Lisa M. Burns, President
P.O. Box 712
Denmark, ME 04022
Phone: (207) 452-2997

Maine Department of Environmental Protection
17 State House Station
Augusta, Maine 04333-0017
Phone: (207) 287-7688 http://www.state.me.us/dep

Home*A*Syst
303 Hiram Smith Hall
1545 Observatory Drive
Madison, WI 53706-1289 Email: homeasys@uwex.edu
Phone: (608) 262-0024 http://www.uwex.edu/homeasyst

3.6 Self Evaluation Questionnaire for Construction Industry

Construction activities, if properly executed using BMPs, can be completed without negatively impacting drinking water supplies. The following questionnaire is designed to help you, the land developer or construction manager, to determine whether you are conducting your development activities in a manner that protects water quality. Your answers to these questions will help you to evaluate how effective your general construction practices are in protecting local water supplies and will provide some direction about where you can improve your practices.

Drinking Water Source Awareness

Do you know the names and locations of public drinking water sources near the construction site? Yes ___ No ___

Do you know the locations of private drinking water sources near the construction site? Yes ___ No ___

What types of drinking water sources are nearby (e.g., is there a ground water well or a surface water source such as a reservoir, lake, river or stream in proximity)? _____

What is the distance from your business to the drinking water supply?
___ feet ___ miles

What is the distance from your business to any tributary stream or river?
___ feet ___ miles

What is the distance from your business to any Wellhead Protection Area?
___ feet ___ miles

Water Quality and Prevention of Pollution

Do you know of any current water quality concerns at the nearby public drinking water sources? Yes ___ No ___

Do your construction plans include and temporary or permanent practices to treat runoff or other water leaving your site? Yes ___ No ___

Contact Water Supplier

Have you ever contacted your local drinking water supplier about your business's potential to affect the water supply? Yes ___ No ___

Contact State Source Water Assessment Program

Have you contacted the state's Source Water Assessment Program about your facility's potential to affect a water supply? Yes ___ No ___

Contaminant Characteristics Of On-Site Materials

Do you know the toxic characteristics of the materials used or stored on the construction site (e.g., fuel, solvents, paint, asbestos, insulation materials, etc.)?
Yes ___ No ___

Are Materials Data Safety Sheets (MSDSs) kept on the property for all on-site hazardous materials (the federal Occupational Safety and Health Administration, or OSHA, requires that these be kept and made available to employees)?
Yes ___ No ___

Are you aware that sediments can contaminate water supplies, even though they may not contain toxic materials or chemicals? Yes ___ No ___

Are all on-site materials that might potentially contribute to contamination of water bodies properly stored and protected? Yes ___ No ___

Does your construction business have an approved method of safely disposing of construction-related waste or unused materials? Yes ___ No ___

Minimizing Waste In Order To Minimize Pollution

Does your business minimize the amount of waste produced? Yes ___ No ___
How? _____

Do you minimize the amounts of unused chemicals stored on-site (e.g., paint, solvents, fuel, fertilizers)? Yes ___ No ___
How? _____

If you do keep large quantities of such materials onsite, do you take measures to contain them, protect them from rain and snow, and manage leaks to avoid interaction with soil or water? Yes ___ No ___
How? _____

Do you take measures to recycle materials as much as possible? Examples of recyclable materials include recyclable plastic, metal and glass containers, partially-used paint, solvents or other chemicals, used asphalt pavement, excavated soils, untreated wood debris, and construction materials).
Yes ___ No ___
What measures? _____

Do you practice water conservation at the construction site? Water conservation not only conserves precious water supplies, but also reduces the amount of runoff, which can carry sediment and other pollutants offsite.
Yes ___ No ___
How? _____

Good Housekeeping

Are all construction material stockpile areas and landscaping materials (soil, mulch, compost, sand, etc.) stored in areas far away from water bodies or wetlands (at least 50 feet is recommended, and more if possible), and protected from wind, rain and snow? Please consult your state and local environmental requirements for proper setback distances.
Yes ___ No ___
How? _____

Are all paint, fuel, and solvent containers stored in a clearly labeled building or shed, without the possibility of leaks or spills reaching bare ground or interacting with water?
Yes ___ No ___

Are used containers or half-full containers promptly removed from the site and taken either to an appropriate disposal facility or reused elsewhere? Yes ___ No ___

Is construction debris regularly and frequently collected and placed in enclosed waste storage containers? Yes ___ No ___

Do you use a phased construction plan? Yes ___ No ___

Do you have a site plan that clearly indicates the location of all erosion control measures; the limit of work; the project phases; the storage areas for vehicles, equipment, materials and fuel; location of fire safety equipment; and the waste storage location? Is this plan posted in locations where all subcontractors can see it clearly and often?
Yes ___ No ___

Do you have a clear maintenance schedule for the best management practices employed on the site, and is it posted in locations where all subcontractors can see it clearly and often? Yes ___ No ___

Does your development plan avoid disturbing land with steep slopes or land near sensitive areas (e.g., wetlands, seeps)? Yes ___ No ___

Are on-site construction vehicle routes designed to minimize or prevent erosion and sedimentation of streams and ponds? Yes ___ No ___

Do you employ vegetated buffer strips (also known as filter strips) to protect water quality by allowing existing vegetation to remain in place adjacent to a water body? Are these wide enough and densely vegetated enough to prevent erosion and sedimentation? Many state and local agencies require a buffer strip between the project and any river, stream, lake, pond or wetland. Please check your state and local environmental requirements for proper setback distances.
Yes ___ No ___
How wide is the buffer? ___ Is that a sufficient width? ___

Do you make use of vegetated berms, swales, channels, detention basins, or other structural methods to prevent runoff of sediment and nutrients from fertilizers or pesticides from entering water bodies or wetlands? Yes___ No ___

Do you employ stormwater BMPs when designing and building your development? Is your post-development stormwater runoff flow rate and characteristics the same as the pre-development stormwater runoff characteristics? Yes ___ No ___

Have you developed a stormwater pollution prevention plan and is it posted?
Yes ___ No ___

Does your plan reduce runoff volumes using alternative site design techniques?
Yes ___ No ___

Inspections And Safety Checks

Are regular inspections, safety checks and monitoring of conditions carried out and the results written down in a logbook or other means of permanent documentation?
Yes ___ No ___

Who conducts the inspections and how often?
Who?_____
How often? _____

Are there enforcement measures that can be taken following inspections? If so, what are they? _____

Keeping Good Records

Are records kept of all hazardous materials bought, stored and used on-site, and their expiration dates? Yes ___ No ___

Are these records updated frequently? Yes ___ No ___

Are records kept concerning disposal or recycling of materials, which describe who, what, when, why and where the material was disposed of? Yes ___ No ___

Training Your Employees And Yourself

Are all employees, including yourself, trained in erosion and sediment control and maintenance; stormwater control and maintenance; pollution prevention and good housekeeping practices to properly handle paints, solvents, pressure-treated materials that are treated with metal salts (e.g., copper chromium arsenate-treated lumber), fertilizers, pesticides; safe and legal disposal of these materials and construction debris; spill management and reporting requirements; rapid and effective communication with management about on-site problems; and worker safety and public health?
Yes ___ No ___

Are subcontractors trained as well? Yes ___ No ___

Is such training done on a regular and frequent basis? Yes ___ No___

Unintentional Activities

Are there any staff or customer activities that could unintentionally cause pollution or a spill to occur? Examples in land development and construction businesses include accidental spillage of soil, paint, solvents, fuel, landscaping materials, fertilizers, pesticides, allowing construction vehicles to take shortcuts which cause erosion and sedimentation of surface water bodies, or not following proper Best Management Practices (BMPs) to prevent pollution. Yes___ No ___

Other Physical And Managerial Practices To Minimize Pollution, Erosion, And Sedimentation

Are job responsibilities clearly defined so that specific individuals are responsible for ensuring that pollution prevention measures are carried out? Yes ___ No ___

Do you have a Project Sequencing Plan that clearly identifies the groups and subcontractors responsible for each phase of the project, the timing of each phase, and their responsibilities in terms of cleanup and maintenance of the construction site? Do you implement this plan? Yes ___ No ___

Do you provide all subcontractors with copies of all permitting conditions relevant to their phase of work, and ensure that they understand these conditions? Yes ___ No ___

Does your business have adequate funding, staff, or other resources needed to conduct all BMPs recommended? Yes ___ No ___

Emergency Response

Have you developed a fuel or chemical spill response plan or a fire emergency plan, and are all staff, including yourself, trained to conduct such an emergency plan immediately? Yes___ No ___

Are all the materials required for emergency response available on-site and maintained in good condition? Yes___ No ___

Are all emergency response phone numbers clearly posted in several locations throughout the site? Yes___ No ___

Assessment Results

If you have answered yes to most or all of these questions, congratulations! You are probably conducting your business in a manner which helps to protect our drinking water.

If many of your answers are no, or you have questions concerning these measures, please study the BMPs in first part of this section closely. Also look at the Case Studies for specific examples of agricultural BMPs that have been used on farms.