CR USA, Inc.
One Crown Way
Philadelphia, PA 19154

Reply to: Michael Antry
Crown Cork & Seal USA, Inc.
One Crown Way
Philadelphia PA 19154
Phone: 215-698-5308
Fax: 215-602-2672

November 23, 2009

Ms. Carolyn J. Casey
RCRA Facility Manager
United States Environmental Protection Agency
5 Post Office Square, Suite 100
OSRR 07-3
Boston, MA 02109-3912

Re: Stewardship Permit Submittal – DEP/HWM/CS-034-006
Revised Operation, Maintenance and Monitoring Plan and
Consultant Designation
Former Risdon Facility - 15 Old Newtown Road, Danbury, CT
USEPA ID CTD001168558

Dear Ms. Casey:

This letter and document submittal have been prepared for the property located at 15 Old Newtown Road in Danbury, Connecticut (Site) in accordance with Conditions III.A.1 and III.A.5 of the Stewardship Permit for CR USA, Inc. (Permit) dated September 29, 2009.

The enclosed *Revised Operation, Maintenance and Monitoring Plan* (Revised OM&M Plan), dated December 2008, has been prepared in accordance with Conditions No. I.E.9 and III.A.1 of the Permit. The Revised OM&M Plan was prepared to describe the specific tasks to be performed as part of the routine OM&M of the hydraulic containment groundwater treatment system and the sub-slab vapor control system operating at the Site.

In accordance with Section III.A.5 of the Permit, CR USA Inc. has designated and assigned Woodard & Curran (W&C) located at 35 New England Business Center Drive, Suite 180, Andover, Massachusetts as the environmental compliance expert to prepare the documents required under this condition. W&C has been the environmental consultant on the Site since 1998, performing numerous investigations of groundwater,

RDMS Doc ID 110449

soil, bedrock, soil vapor, and indoor air across the Site. They have designed the upgraded groundwater hydraulic containment treatment system and the newly installed sub-slab vapor control system beneath the site building, oversaw the installation of both systems and have performed the operation and monitoring activities on-site since 2005. The two primary W&C personnel working on this Site include Mr. Jeffrey Hamel, LSP, LEP and Ms. Catharine Rockwell, PE. A summary professional profile for each of them is attached.

In accordance with Section I.E.15 of the Permit and 40 CFR 270.11(d)(1), the following certification is provided:

> "I certify under penalty of law that this document and all attachments were prepared under my direction or supervision according to a system designed to assure that qualified personnel properly gather and evaluate the information submitted. Based on my inquiry of the person or persons who manage the system, or those persons directly responsible for gathering the information, the information submitted is, to the best of my knowledge and belief, true, accurate, and complete. I am aware that there are significant penalties for submitting false information, including the possibility of fine and imprisonment for knowing violations."

If you have any questions or require additional information, please contact Kenny Gulledge (CR USA, Inc) at 843-320-1171 or Jeffrey Hamel (W&C) at 978-557-8150.

Sincerely,

CR USA, Inc.

Michael Antry
Corporate Director of EH&S

Enclosures: December 2008 Revised Operation, Maintenance and Monitoring Plan
W&C Profile Sheets

cc: Lauren Kostiuk, CTDEP
Kenny Gulledge, CR USA, Inc.
Jeff Hamel, W&C

CMR/JH
Project Number 97001

ATTACHMENT
W&C Profile Sheets

JEFFREY HAMEL, LSP, LEP
SENIOR VICE PRESIDENT

Professional Profile

Jeff is a Senior Vice President with over 20 years of experience in project management of corrective action sites. He is a Licensed Environmental Professional in Connecticut and a Licensed Site Professional in Massachusetts. He has been responsible for the planning, scheduling, coordination, implementation, and closure of site investigation and remediation projects involving the releases of hazardous materials and/or petroleum products. Jeff has considerable experience planning and implementing large, multi-phased projects and managing large amounts of analytical, hydrogeological, and investigation data. He has participated in preliminary assessments, comprehensive site characterizations, risk assessments, feasibility studies, remedy designs, remedy implementations, operations and maintenance of remedial systems, and construction projects for both regulatory agencies and private industry. He has managed site investigation and remediation projects consistent with the Connecticut Remediation Standard Regulations, RCRA Corrective Action, Superfund, the Federal PCB Disposal Regulations, and the Massachusetts Contingency Plan, and has conducted and participated in many public and regulatory meetings where project results and findings were presented.

Education
B.S., Geology, Northeastern University

Registrations
Licensed Environmental Professional, CT
Licensed Site Professional, MA, 1278

Professional Associations
Environmental Professionals' Organization of Connecticut
Licensed Site Professional Association

Technical Expertise
PCBs in Building Materials
Large Scale Site Investigation/Remediation Projects

Specialized Training
40-Hour OSHA Health and Safety Training with Current Refreshers

CATHARINE ROCKWELL, PE
PROJECT ENGINEER 2

Professional Profile

Cathy has nine years of environmental consulting experience in conducting field investigations and remediation activities throughout New England. She is a licensed professional engineer in the state of Massachusetts. Her primary focus involves environmental and hydrogeological investigations and remediation involving releases of hazardous materials and petroleum products at both state and EPA-led corrective action sites. Her responsibilities include site investigations, feasibility studies, remedial evaluation and design, remedial system cost estimating, implementation and monitoring of remedial alternatives, and environmental litigation technical support.

Education
B.S., Civil Engineering, Rensselaer Polytechnic Institute
M.S., Civil/Environmental Engineering, Massachusetts Institute of Technology

Registrations
Registered Professional Engineer, MA, 46305

Specialized Training
OSHA 40-Hour HAZWOPER Training with Current 8-hour Refresher Training

Professional Associations
American Society of Civil Engineers
Boston Society of Civil Engineers
Licensed Site Professional Association

REVISED OPERATIONS, MAINTENANCE and MONITORING PLAN

On-Property Conditions

15 Old Newtown Road
Danbury, CT

1.866.702.6371
35 New England Business Center
Andover, MA

#97001
CR USA Inc.
December 2008

TABLE OF CONTENTS

SECTION **PAGE NO.**

1. BACKGROUND AND ORGANIZATION 1-1

1.1 OM&M Plan Organization 1-2
1.2 Supplemental Information 1-3

2. OPERATION AND MAINTENANCE 2-1

2.1 Operations 2-1
2.2 Maintenance 2-4
2.2.1 Groundwater Treatment System 2-5
2.2.2 Sub-Slab Vapor Control System 2-5

3. MONITORING 3-1

3.1 Hydraulic and Treatment System Monitoring 3-1
3.1.1 Treatment System Discharge Monitoring 3-2
3.1.2 Effluent Flowrate 3-2
3.1.3 Water Discharge Sampling and Analysis 3-2
3.1.4 Air Discharge Monitoring 3-4
3.1.5 Groundwater Quality Monitoring 3-4
3.2 Sub-Slab Vapor Control System Monitoring 3-6

4. RECORDKEEPING AND REPORTING 4-1

4.1 Operations, Maintenance, and Monitoring Forms 4-1
4.2 Laboratory Results 4-1
4.3 System Reporting 4-1
4.4 Discharge Meter Reporting 4-2
4.5 Notifications 4-2

5. ADDITIONAL OM&M COMPONENTS 5-1

5.1 Training 5-1
5.2 Site Security/ Access 5-1
5.3 Health and Safety 5-1
5.4 Emergencies 5-1

LIST OF TABLES

TABLE		PAGE NO.
Table 1-1	Summary of Main Tasks	1-2
Table 2-1:	Response to Major System Alarms (Notification Remotely)	2-1
Table 2-2:	System Alarms and Response	2-2
Table 3-1:	Applicable General Permit Discharge Limitations	3-4
Table 3-2	Groundwater Quality Monitoring Analytical Testing Summary	3-5
Table 4-1	OM&M Log Sheet Documentation	4-1
Table 5-1	Emergency Contact List	5-2

LIST OF FIGURES

Figure 1: Groundwater Recovery and Monitoring Locations

Figure 2: Hydraulic Containment Treatment System Piping and Instrumentation Diagram

Figure 3: Sub-Slab Vapor Control System Extraction Point Layout

Figure 4: Sub-Slab Vapor Control System Piping Layout - Roof

Figure 5: Sub-Slab Vapor Control System Piping and Instrumentation Diagram – Zone 1

Figure 6: Sub-Slab Vapor Control System Piping and Instrumentation Diagram – Zone 2

Figure 7: Vapor Probe and Extraction Point Locations

APPENDICES

Appendix A: Groundwater System Monitoring forms

Appendix B: CTDEP Discharge Monitoring Form (DEP-WD-DMR-007)

Appendix C: Sub-slab System Monitoring Forms

Appendix D: CTDEP Violation Form (DEP-WD-VIOL-007)

1. BACKGROUND AND ORGANIZATION

CR USA's former Danbury, Connecticut facility is located at 15 Old Newtown Road. Based on investigative activities performed at the site, subsurface soils and groundwater have been impacted by past releases of chlorinated volatile organic compounds and metals. The facility is being remediated in accordance with the RCRA Corrective Action program under the oversight of the United States Environmental Protection Agency (EPA) and Connecticut Department of Environmental Protection (CTDEP). The selected remedy for the property, as detailed in the March 2008 Remedial Action Plan, includes the continued operation of the existing hydraulic containment groundwater treatment system, the installation and operation of a sub-slab vapor control system beneath the existing building to prevent migration of impacted soil vapor into indoor air, and the use of environmental land use restrictions to prevent direct contact and ingestion of impacted soil and groundwater and restrict construction of any new buildings in select areas. This Operation, Maintenance and Monitoring (OM&M) Plan has been prepared to describe the specific tasks to be performed as part of the routine OM&M of the hydraulic containment groundwater treatment system and the sub-slab vapor control system.

The property line hydraulic containment groundwater treatment system was initially installed as an Interim Corrective Measure (ICM) and was enhanced in 2005 with the addition of three recovery wells along the northeastern edge of the property. The enhanced groundwater hydraulic containment system operates continuously, twenty-four hours a day. The system treats volatile organic compound (VOC) impacted groundwater from six hydraulic containment recovery wells (RW-1 through RW-6) at a design flow rate of 25 to 30 gallons per minute (gpm). Refer to Figure 1 for the layout the wells and trenching for the system and Figure 2 for the Piping and Instrumentation Diagram (P&ID). The main components of the treatment system include:

- Submersible groundwater extraction pumps in six recovery wells, with high/low water level shut off;
- Bag filters to reduce the levels of iron, manganese, and suspended sediments;
- Tray air stripper for VOC removal (air stripper unit includes blower and discharge transfer pump);
- Precipitate control through Redux 380 (sequestering agent) and a chemical feed pump;
- Two 1,000-pound granular activated carbon units to treat discharged air; and
- Control panels to operate the system, notify the master computer of any major alarm conditions, record air and water flowrates through the system, and transfer data to the master computer.

All equipment, with the exception of the submersible pumps and associated piping, is housed in a metal treatment building located adjacent to the main facility building (refer to Figure 1).

The sub-slab vapor control system operates continuously, twenty-four hours a day and is automated to provide notifications if the system shuts down. The sub-slab system extracts VOCs trapped in the air pockets between soil particles by creating a negative pressure field directly underneath the building in relation to the buildings ambient pressure. Vapor extraction blowers and a series of sub-slab extraction points create the negative pressure field. VOC vapors beneath the slab are caught in this advective sweep, collected and piped to the rooftop for discharge to the outside atmosphere. In addition to preventing the migration of VOCs into the building, the system also facilitates the removal of contaminant mass from the subsurface. The system pulls soil vapor from 32 extractions points (EP-1 through EP-31 and VES-109) within two zones beneath the building. Refer to Figures 3 and 4 for the location of the extraction points and associated piping for the sub-slab system and Figures 5 and 6 for the system P&ID. The main components of the treatment system include:

- Five regenerative blowers, each housed in a wooden storage building on the roof of the facility; and

- Control panels to operate the system and to notify the master computer if a blower or the system shuts down.

Currently, CR USA, Inc. is not performing manufacturing operations and there are no full-time workers at the facility. The Site is fenced with locked access gates.

1.1 OM&M PLAN ORGANIZATION

This OM&M Plan has been divided into the following main sections: operations and maintenance, monitoring, recordkeeping and reporting, and additional OM&M components (training, emergencies, and site security/access). The operations and maintenance components of this plan (Section 2) address the physical components of the treatment system, ensuring that the system components are continuously operating as designed. The monitoring components of the plan (Section 3) are set up to ensure that the system is working effectively (i.e., hydraulically contain the dissolved VOC plume in groundwater within the property boundary and treat the extracted groundwater to meet the discharge permit conditions, etc.).

The recordkeeping and reporting section of the plan (Section 4) addresses discharge permit conditions as well as notifications on the progress and status of the treatment systems. The final section of the plan (Section 5) includes a number of additional OM&M components, including training requirements, emergency procedures, and site security/access that are required to facilitate the operation of the treatment systems.

The following table outlines the main tasks to be performed and the individual(s) responsible for the task being completed:

Table 1-1 Summary of Main Tasks

Task	Timeframe	W&C Responsible Party
Training		
On-site OM&M	Prior to performing OM&M	Project Lead Technician/ SCADA group
Confined Space Entry	Prior to performing well pump OM&M (at RW-1 through RW-3)	Project Lead Technician
Remote Monitoring		
Perform Data Review Documentation	Weekly	Project Engineer or designee
On-site OM&M		
Perform Documentation	Monthly	Project Lead Technician or designee
Reporting		
Log Book Documentation Update	Monthly	Project Lead Technician or designee
Discharge Monitoring Reporting	Monthly	Project Engineer or designee
Status Report	Semi-Annual	Project Engineer/ Project Manager

1.2 SUPPLEMENTAL INFORMATION

Equipment specifications, installation instructions and troubleshooting information are provided in the specific vendor's Operation and Maintenance Manuals prepared for the Site and available in the treatment building. These include:

- Bisco Environmental - *Air Stripper System Operation and Maintenance Manual* – provides equipment specifications and installation, start-up, maintenance and troubleshooting guidance for the hydraulic containment groundwater treatment system.
- Telog – *Telogers for Windows* – provides guidance on the Telog unit and associated software.
- Woodard & Curran (W&C) – Electrical and control panel plans (updated 2008)
- W&C – Sub-slab Vapor Control System Equipment Operation and Maintenance Manual

2. OPERATION AND MAINTENANCE

2.1 OPERATIONS

The operations component of this plan addresses the physical components of the groundwater treatment system and the sub-slab vapor control system, ensuring that the system components are continuously operating as designed. Monitoring that both systems are operational will occur remotely through the PLC and on-site through field visits. The telog unit will communicate with the master computer, located in the W&C Andover office, to deliver major system alarms. This computer will be checked on a daily basis during normal work hours. Non-major system alarms will be sent to the PLC panel located in the treatment building and will be addressed during the monthly site visits. All alarm conditions that have been initiated will be documented and addressed in accordance with Tables 2-1 and 2-2 and the Remote and On-site OM&M Forms (provided in Appendix A).

Ensuring that the system is operational will be performed utilizing the alarms set up through the PLC and telog unit. Table 2-1 provides a list of the major system alarms, describing the major alarm conditions, the appropriate response to each alarm, and the person responsible to address the alarm. Clarification of the alarm details will be displayed on the PLC display panel in the treatment shed. Upon arriving to the Site, W&C site personnel will check the display panel for further clarification on the source of the operational issue.

Table 2-1: Response to Major System Alarms (Notification Remotely)

Alarm	Alarm ID	Response	Responsibility
A System shut down			
No power at treatment building	0, 2, 14	Once alarm received, notify Project Lead Technician to arrange site visit.	Andover to notify Project Lead Technician to respond
Air Stripper blower failure	10, 12		
Transfer pump failure	11,13		
B Potential hydraulic containment issue			
Recovery well pump failure	4 through 9	Once alarm received, notify Project Lead Technician to arrange site visit.	Andover to notify Project Lead Technician
C Total flow in 24 hours exceeds permit conditions	21	Check system operation the next business day to ensure system re-started after exceedence. If exceedence occurs again, contact Project Lead Technician to arrange site visit.	Andover to notify Project Lead Technician to respond
D Sub-slab system shut down and/or blower down	22 through 26	Once alarm received, notify Project Lead Technician to arrange site visit.	Andover to notify Project Lead Technician to respond

In addition to the alarms listed above, there are several non-major alarms that if activated, will notify the PLC panel. During each site visit (which at a minimum will be monthly), W&C site personnel will check the PLC display panel for any additional alarms and respond accordingly. Table 2-2 lists all of the potential alarm conditions (including the major alarms), the appropriate response, and the person responsible to address the alarm.

Table 2-2: System Alarms and Response

Alarm Tag Number	Major System Alarm A, B, C, D	Alarm Description	Response	Responsibility
AS_ALM_0	A	Air Stripper System PLC Processor Faulted	Diagnose and address problem, re-start system.	Andover to notify Project Lead Technician to respond
AS_ALM_1	--	Air Stripper System PLC Processor Low Battery	Replace battery	Project Lead Technician
AS_ALM_2	A	Air Stripper System Control Panel Lost Power	Diagnose and address problem, re-start system.	Andover to notify Project Lead Technician to respond
AS_ALM_3	--	Air Stripper System Control Panel 120VAC Surge Suppressor Fail	Diagnose and address issue; document and report to PM if problem persists.	Project Lead Technician
AS_ALM_4	B	RW-1 Pump Failure	Diagnose and address problem, re-start pump.	Andover to notify Project Lead Technician to respond
AS_ALM_5	B	RW-2 Pump Failure	Diagnose and address problem, re-start pump.	Andover to notify Project Lead Technician to respond
AS_ALM_6	B	RW-3 Pump Failure	Diagnose and address problem, re-start pump.	Andover to notify Project Lead Technician to respond
AS_ALM_7	B	RW-4 Pump Failure	Diagnose and address problem, re-start pump.	Andover to notify Project Lead Technician to respond

Alarm Tag Number	Major System Alarm A, B, C, D	Alarm Description	Response	Responsibility
AS_ALM_8	B	RW-5 Pump Failure	Diagnose and address problem, re-start pump.	Andover to notify Project Lead Technician to respond
AS_ALM_9	B	RW-6 Pump Failure	Diagnose and address problem, re-start pump.	Andover to notify Project Lead Technician to respond
AS_ALM_10	A	Air Stripper Blower Failure	Diagnose and address issue with blower, re-start system.	Andover to notify Project Lead Technician to respond
AS_ALM_11	A	Air Stripper Transfer Pump Failure	Diagnose and address issue with the transfer pump, re-start system.	Andover to notify Project Lead Technician to respond
AS_ALM_12	A	Air Stripper Blower Low Pressure	Diagnose and address issue with the blower, re-start system.	Andover to notify Project Lead Technician to respond
AS_ALM_13	A	Air Stripper High High Level	Diagnose and address issue with transfer pump, re-start system.	Andover to notify Project Lead Technician to respond
AS_ALM_14	A	Phase Loss	Diagnose and address problem, re-start system.	Andover to notify Project Lead Technician to respond
AS_ALM_15	--	UPS Fault	Check to ensure it is operating	Project Lead Technician
AS_ALM_16	--	UPS Low Battery	Replace battery	Project Lead Technician
AS_ALM_17	--	Air Stripper Influent Air Flow High Rate	Diagnose and address problem.	Project Lead Technician
AS_ALM_18	--	Air Stripper Influent Air Flow Low Rate	Check air stripper trays for fouling, clean if necessary.	Project Lead Technician

Alarm Tag Number	Major System Alarm A, B, C, D	Alarm Description	Response	Responsibility
AS_ALM_19	--	Air Stripper Effluent High Flow Rate (water)	Check individual flows at each well head, adjust flow for well(s) out of range.	Project Lead Technician
AS_ALM_20	--	Air Stripper Effluent Low Flow Rate (water)	Check individual flows at each well head, adjust flow for well(s) out of range.	Project Lead Technician
AS_ALM_21	C	High Total Effluent Flow	Check individual flows at each well head, adjust flow for well(s) out of range.	Andover to notify Project Lead Technician to respond
AS_ALM_22	D	Blower 1 Fail to Run	Diagnose and address problem, re-start blower.	Andover to notify Project Lead Technician to respond
AS_ALM_23	D	Blower 2 Fail to Run	Diagnose and address problem, re-start blower.	Andover to notify Project Lead Technician to respond
AS_ALM_24	D	Blower 3 Fail to Run	Diagnose and address problem, re-start blower.	Andover to notify Project Lead Technician to respond
AS_ALM_25	D	Blower 4 Fail to Run	Diagnose and address problem, re-start blower.	Andover to notify Project Lead Technician to respond
AS_ALM_26	D	Blower 5 Fail to Run	Diagnose and address problem, re-start blower.	Andover to notify Project Lead Technician to respond

2.2 MAINTENANCE

Routine maintenance will be performed during each monthly OM&M site visit. W&C personnel shall observe equipment operation for any potential problems during each visit. Minor or routine maintenance will be performed and documented, as needed. Any significant or unusual conditions or problems shall be reported to the project's engineer or designee prior to leaving the Site.

2.2.1 Groundwater Treatment System

Common maintenance activities may include inspection and/or replacement of bag filters, re-calibration of flow meters, switching over the Redux drum, inspection and/or cleaning of the air stripper trays, and inspection and/or cleaning well pumps and/or water lines. Other activities may be required during each visit based on site specific conditions. All work performed shall be documented on the On-site OM&M Form, provided in Appendix A.

Note that water to clean the air stripper trays may be obtained from the facility building exterior spigot. Routine monitoring can be conducted from the ground surface; however, access into the three older recovery well vaults (RW-1 through RW-3) for pump removal will require Confined Space Entry Certification. Refer to Woodard & Curran's Confined Space Entry Manual for additional details.

2.2.2 Sub-Slab Vapor Control System

Common maintenance activities may include: (1) inspection and/or replacement of blowers, particulate filters, piping and appurtenances, replacement of electrical components (lights, fuses, motor starters, etc.), and/or vapor probes, if required, (2) inspection of possible air entry routes (e.g. building floor slab cracks and/or penetrations) to ensure that they are sealed properly to enhance the negative pressure field when the system is in operation and are not causing air flow short-circuiting to occur, and/or (3) repair of any identified entry routes. Additionally, routine maintenance will need to be conducted on the alarm system to ensure that it is effectively notifying proper personnel when a loss of system power or shut down of a blower occurs.

3. MONITORING

Monitoring of the groundwater hydraulic containment system and sub-slab vapor control system will be performed to ensure the systems are working effectively in achieving their performance objectives. The following sections outline these objectives and the monitoring activities that will be performed to ensure that they are met.

3.1 HYDRAULIC AND TREATMENT SYSTEM MONITORING

The performance objectives for the hydraulic containment groundwater treatment system are to: 1) prevent migration of impacted groundwater off the property at levels in excess of the applicable CTDEP's Remediation Standard Regulations (RSRs); and 2) treat the extracted groundwater to meet the discharge permit conditions. Monitoring the system's performance will occur remotely on a weekly basis through the PLC/ telog unit and through site visits on a monthly basis. The telog unit will communicate with the master computer, located in the W&C Andover office, to download measured air and water flowrates. The remaining monitoring will be performed during site visits. The monitoring activities have been categorized under hydraulics monitoring and discharge monitoring and discussed in the following sections.

A summary of the monitoring activities to be performed to ensure that the treatment system and each component of the system are working effectively are provided below. Refer to the OM&M forms in Appendix A for additional details.

Remote Monitoring – Weekly

- Air flow through the stripper
  - Current flowrate
  - Average, minimum and maximum flowrate since the last monitoring event
- Effluent water flow from the air stripper
  - Current flowrate
  - Average, minimum and maximum flowrate since the last monitoring event
  - Total flow (in gallons) in the past week and since system start-up

On-site Monitoring – Monthly

- Air flow through the stripper
  - Current flowrate
- Effluent water flow from the air stripper
  - Current flowrate
  - Total flow (in gallons) since system start-up (at PLC panel and totalizing flow meter)
- Pressure Readings
  - Before and after both bag filters
  - Air stripper influent
  - Before both GAC units
- Recovery Wells (each well)
  - Flowrate
  - Pressure
  - Depth to water
  - Flow control valve setting
- Hydraulic Containment
  - Depth to groundwater will be measured at 30 select monitoring wells (refer to Figure 1 and Appendix A for a list of wells on the OM&M form)

3.1.1 Treatment System Discharge Monitoring

The extracted groundwater will be treated and discharged in accordance with a certificate of registration issued by the CTDEP to Crown Risdon under the General Permit for the Discharge of Groundwater Remediation Wastewater to a Sanitary Sewer. The receiving facility is the City of Danbury Water Pollution Control Plant. Information regarding this specific registration is as follows:

- Site No. – 34-021
- Permit No. – GGR001441
- Initially Issued – March 4, 2005
- Re-issued – April 18, 2008
- Expires – February 15, 2018

As part of the General Permit, specific discharge monitoring activities are required and will be conducted as described in the following sections.

3.1.2 Effluent Flowrate

On a weekly basis, the total flow (in gallons), the total daily flow treated in the past week, and total flow since system start-up will be monitored remotely and documented on the Remote Monitoring OM&M form (provided in Appendix A).

During each monthly site monitoring event, the total flow through the system from the meter within the treatment shed and from the PLC display will be recorded. The weekly and monthly readings will be reviewed and calibrated/adjusted accordingly.

Under the General Permit, the allowable maximum daily flow is less than 50,000 gallons per day.

3.1.3 Water Discharge Sampling and Analysis

Water discharge monitoring will consist of sampling and analyses of both influent (raw water) and effluent (treated water to be discharged) samples, as described below. For all water samples collected, the chain of custody must state that analytical results are to be sent to the project's engineer in Andover to facilitate prompt reporting under the General Permit.

<u>Influent Samples (raw water)</u>

Consistent with the General Permit, at a minimum, a semi-annual screening analysis will be conducted. Total influent grab samples into the treatment system (combined sample from all six recovery wells = 1 sample) will be collected and analyzed by a certified laboratory on a quarterly basis for total VOCs (via CT RCP 8260B) and 13 priority pollutant metals and on a semi-annual basis for total and hexavalent chromium and cyanide (total and amenable). In addition, the pH will be measured in the field during each quarterly sampling event. All influent samples will be collected from the sampling port located just before the bag filters; refer to Figure 2 for the process diagram.

<u>Effluent Samples (treated water to be discharged)</u>

Consistent with the General Permit and based on the influent concentrations, grab samples of the treated effluent water will be collected and analyzed by a certified laboratory for total VOCs at the General Permit defined frequency (monthly). In addition, the pH will be measured in the field during each sampling event. Similar to the influent sampling, effluent samples will also be analyzed for the 13 priority pollutant metals on a quarterly basis and total and for total and hexavalent chromium and cyanide (total and amenable) on a semi-annual basis.

The effluent sample will be collected from the sampling port located after the air stripper unit, just prior to exiting the building; refer to Figure 2 for the process diagram. The results of the analyses will be documented on the CTDEP Discharge Monitoring Report Form (DEP-WD-DMR-007) and retained within the treatment building. A copy of the form is provided in Appendix B.

A summary of the sampling schedule for discharge monitoring is as follows:

Action	Analysis	Frequency	Date to Perform
Effluent	VOCs and pH	Monthly	During each monthly O&M visit
	13 priority pollutant metals	Quarterly	March, June, September, and December
	Total and hexavalent chromium, cyanide (total and amenable)	Semi-annually	September and March
Combined Influent	VOCs, pH, 13 priority pollutant metals	Quarterly	March, June, September, and December
	Total and hexavalent chromium, cyanide (total and amenable)	Semi-annually	September and March

A summary of the effluent limitations for the specific constituents of concern at the site (or the specific limitations of the treatment system) is presented below in Table 3-1. All analytical data reports will be forwarded to the Project Engineer to compare with the General Permit discharge limitations. Refer to Section 4 for additional details regarding discharge monitoring notification to the City of Danbury and CTDEP.

Table 3-1: Applicable General Permit Discharge Limitations

	Maximum Limit or Concentration
Daily Flow	50,000 gpd
Total VOCs	5 mg/l
Chlorinated VOCs	1 mg/l
MTBE	1.0 mg/l
Arsenic	0.1 mg/l
Barium	5.0 mg/l
Beryllium	2.0 mg/l
Cadmium	0.1 mg/l
Chromium - Total	1.0 mg/l
Hexavalent Chromium	0.1 mg/l
Copper	1.0 mg/l
Total Cyanide	0.6 mg/l
Amenable Cyanide	0.1 mg/l
Lead	0.1 mg/l
Magnesium	50 mg/l
Mercury	0.005 mg/l
Nickel	1.0 mg/l
Selenium	1.0 mg/l
Silver	0.1 mg/l
Thallium	1.0 mg/l
Tin	2.0 mg/l
Zinc	1.0 mg/l

3.1.4 Air Discharge Monitoring

Based on the design flowrate and anticipated concentrations of constituents for the groundwater treatment system, the untreated VOC emissions to the atmosphere from the air stripper was estimated to be less than two (2) tons per year. As a result, an air permit is not required for this system. In addition, based on the design groundwater and air flowrates to the stripper and the location of the treatment system, it has been determined that the emissions from the air stripper, without treatment, would be in compliance with the Connecticut Hazardous Air Pollutant (HAP) regulations.

However, as a best management practice and based on previous discussions with EPA, two 1,000-pound vapor phase granular activated carbon (GAC) units, operated in series, have been installed to treat the exhaust from the air stripper. Monitoring of the two vapor phase GAC units will be performed on a quarterly basis during the monthly OM&M visit. A photoionization detector (PID) will be utilized to measure the total organic vapor (TOV) levels entering, between, and exiting the GAC units. These readings, along with vendor information, influent groundwater VOC concentration data, and carbon isotherm data will be used to determine the need for change-out of the GAC units. As needed, the spent carbon will be removed from the Site by the supplier at the time of change-out and handled and transported in accordance with all applicable local, State, and Federal regulations.

3.1.5 Groundwater Quality Monitoring

Groundwater quality monitoring has been conducted at the Site since 1981 as part of closure and post-closure activities relating to the former surface impoundments; ICM performance monitoring; and overall RCRA Corrective

Action activities being performed at the site. In December 2001, a Baseline Groundwater Monitoring Report and Revised Groundwater Monitoring Workplan was prepared and implemented to standardize the groundwater monitoring program going forward from that point in time. This program consisted of quarterly sampling and analyses of 10 monitoring wells for inorganics and annual sampling of 13 monitoring wells for VOCs. Based on the 2002 quarterly sampling results, the program was revised to annual sampling for both inorganics and VOCs from these same wells (refer to the January 2003 Groundwater Monitoring Report). These annual sampling activities have been conducted since then, with some additions to the sampling program, as shown below. In September 2008, EPA issued a YE status code to Environmental Indicator CA750 Migration of Contaminated Groundwater Under Control. As part of this finding, semi-annual groundwater sampling will be conducted to ensure groundwater conditions continue to support this finding.

To monitor groundwater conditions over time, groundwater samples will be collected from 6 monitoring wells on a semi-annual basis and from 10 additional monitoring wells on an annual basis, as indicated on Table 3-2. All samples will be collected in accordance with the procedures and processes described in the project *Quality Assurance Project Plan* (QAPP) with comments/revisions and results documented in the semi-annual OM&M status report and related correspondence with EPA.

Table 3-2 indicates the specific monitoring wells to be sampled and for which particular analyses. Figure 1 shows the location of the wells. As indicated below, samples will be analyzed for VOCs via CTDEP Reasonable Confidence Protocol (RCP) Method 8260B, total cyanide and/or the 13 priority pollutant metals.

Table 3-2 Groundwater Quality Monitoring Analytical Testing Summary

Monitoring Well	ANALYSIS		
	VOCs CT RCP 8260B	Total Cyanide	13 Priority Pollutant Metals
CA 750 Monitoring Wells			
MW-1	X	X	X
MW-2	X	X	X
MW-3	X	X	X
MW-8	X	X	X
MW-9	X		
MW-10	X	X	X
MW-11	X	X	X
MW-14*	X		
MW-15M*	X	X	X
MW-111*	X	X	X
MW-112	X		
MW-113*	X	X	X
MW-508	X	X	
MW-508C*	X	X	
MW-601B	X	X	X
2ONR-MW-1A*	X	X	X
TOTALS	**16**	**13**	**11**

*Monitoring well will also be sampled on a semi-annual basis in support of the EI CA750 status code. Wells are located along the downgradient property line or off the property in the downgradient direction.

3.2 SUB-SLAB VAPOR CONTROL SYSTEM MONITORING

The performance objective for the sub-slab vapor control system is to eliminate the pathway for sub-slab soil vapors in excess of the RSR I/C soil vapor criteria to migrate into indoor air. This will be performed by establishing a negative pressure beneath the slab to promote purging of accumulated soil vapor. Measurements to monitor the effectiveness of the system in meeting this objective will include measurements from sub-slab monitoring and extraction points to establish a pressure differential across the floor slab and the collection and analyses of indoor air samples to demonstrate levels below RSRs I/C Target Indoor Air Concentrations.

After system start-up, monitoring of the system's performance will occur through site visits on a monthly basis. Monitoring that the sub-slab system is operational will be performed remotely on a daily basis through the Telog unit. The Telog unit will notify the master computer if any of the blowers shut down due to an electrical component issue locally at the blower enclosure, due to manually turning off the blower at the local control panels, or if the entire system shuts down due to loss of electricity. A summary of the on-site monitoring activities to be performed to ensure that the sub-slab vapor control system and each component of the system are working effectively are provided below. Refer to the OM&M forms in Appendix C for additional details.

Routine Monitoring

The routine monitoring will be performed on a monthly basis to evaluate the effectiveness of the sub-slab system in meeting the overall objectives of the system. Routine monitoring commenced in October 2008 after the first month of system start-up activities. The routine activities include monitoring of the five blowers, the 32 extraction points (EP-1 through EP-31 and VES-109) and up to 26 existing vapor probes at the frequency described below. Refer to the routine monitoring checklist in Appendix C (Table C-1) for additional details on the routine monitoring and Figure 7 for the location of the extraction points and vapor probes within the building. Documentation of monitoring activities will be performed on the forms provided as Table C-2 in Appendix C.

Months 2 through 6

<u>Monthly</u>

Blowers – Flow rate, vacuum, TVOC- PID

Extraction points – Flow rate, vacuum, TVOC-PID

Accessible vapor probes – Vacuum

<u>Quarterly, in addition include the following:</u>

Accessible vapor probes –TVOC-PID

After Month 6

<u>Monthly</u>

Blowers – Flow rate, vacuum, TVOC- PID

<u>Quarterly, in addition include the following:</u>

Extraction points – Flow rate, vacuum, TVOC-PID

Accessible vapor probes – Vacuum, TVOC-PID

Annually

Indoor Air – after the first 6 months of system operation and annually until compliance with the applicable CTDEP RSRs target indoor air concentrations has been achieved, indoor air samples will be collected from 4 interior locations (WCAS-2 through WCAS-5) and 1 exterior (background) location (WCAS-1), as shown on Figure 7, provided continued access to the building and pending any changes to interior operations. Samples will be collected in Summa canisters and analyzed for VOCs via TO-15.

Blower Effluent – Discharge samples from the five blowers will be collected on an annual basis for analysis by EPA Method TO-15 to compare to CTDEP discharge limits.

As discussed above, extraction point and vapor probe vacuum will be measured using a Magnehelic pressure gauge and flow will be calculated by measuring velocity with a hot-wire anemometer. A PID will be used to screen each extraction point for total VOCs to assess influent concentrations with time in different areas beneath the slab. In addition and at least initially prior to building occupancy, the seventeen vapor probes installed during the soil vapor survey and nine vapor probes installed during the PET (see Figure 7) will also be used to evaluate system performance. Depending on future building use, these points may not be accessible in the future.

Vacuum measurements will be measured monthly to assess the system's subsurface vacuum influence and TVOC-PID measurements will be monitored to evaluate sub-slab vapor concentrations over time. A vacuum measurement of 0.002 in-WC at the vapor probes will be considered significant and an indication that the system has influence over that area (general industry standard). The 0.002 in–WC (or 0.5 pascals) is not the desired vacuum, but rather a measurement in which influence would be considered significant. By combining vacuum measurements with TVOC-PID readings and the overall goal of indoor air concentrations below CTDEP RSR target indoor air levels, the effectiveness of the system will be evaluated.

Process air from the blowers is discharged approximately 5 feet vertically above the roofline of the building. During the Design Basis and as presented in the March 2008 RAP, pre-operation calculations indicated that an air permit is not required for the system and estimated emissions for the blowers will be in compliance with the Connecticut Hazardous Air Pollutant Regulations. As indicated above, air discharge samples will be collected from the blowers to monitor that actual levels are below these discharge limits.

During each semi-annual reporting period, an evaluation will be performed on the need for supplemental or a reduction in monitoring. In addition, depending on the performance of the system, select areas may not require continuous operation and therefore, monitoring in these areas would be reduced and/or eliminated.

4. RECORDKEEPING AND REPORTING

As part of the operations and monitoring of the treatment system, various types of recordkeeping and reporting are required and will be conducted. These activities are described in the following sections.

4.1 OPERATIONS, MAINTENANCE, AND MONITORING FORMS

A field log will be maintained at the treatment building with all completed weekly remote monitoring and monthly site monitoring forms (blank forms provided in Appendices A, B and C). Once the on-site monitoring has been completed, all log sheets will be faxed to Andover. The original log sheets will be brought to the treatment building during each site visit. This field log will be maintained and kept up to date at the Site as required by the General Permit. Refer to the table below for the sequence of events and appropriate documentation activities.

Table 4-1 OM&M Log Sheet Documentation

Document	Task	Responsible Party
Remote Monitoring log sheet	Data entry - update files	Project Engineer or designee
	Fax or mail copy of log sheet to Cheshire	Project Engineer or designee
	Transport and file log sheets in site log book	Project Lead Technician (and field staff)
On-Site Monitoring log sheet	Document all work performed	Project Lead Technician (and field staff)
	Make copy of log sheet - fax or mail to Project Engineer in Andover	Project Lead Technician (and field staff)
	Data entry - update files	Project Engineer or designee
	Transport and file log sheets in site log book	Project Lead Technician (and field staff)

4.2 LABORATORY RESULTS

Upon receipt of the groundwater and vapor analytical data from the laboratory, the results will be validated consistent with the procedures described in the project QAPP.

The validated results of the influent and effluent laboratory analyses from the groundwater treatment system will be documented on the CTDEP Discharge Monitoring Report Form (DEP-WD-DMR-007) (provided in Appendix B) and retained within the treatment building and/or W&C Andover office file. The full laboratory results will be retained in the project files.

4.3 SYSTEM REPORTING

Semi-annual status reports will be prepared and submitted to EPA in June and December of each year to document the monitoring data collected and the performance of both the hydraulic containment groundwater treatment system and the sub-slab vapor control system. This report will include recommendations for system modifications based on performance. These may include: vapor extraction point adjustments or shut-down for a period of time (with

monitoring); the need of additional groundwater or vapor extraction wells to adequately contain impacted groundwater or meet system objectives. These activities will not be implemented until discussion/approval is received from EPA.

4.4 DISCHARGE METER REPORTING

Discharge meter monitoring will be performed during each monthly site visit for the hydraulic containment groundwater treatment system. Upon completion of the site visit, the on-site monitoring form (Appendix A) will be faxed to the project engineer in Andover. Upon receipt of the monthly on-site monitoring form, a letter will be sent to the City of Danbury Water Pollution Control Plant notifying them of the total effluent discharged to the plant during the past month of operation (as requested). A copy will be kept in the project file.

4.5 NOTIFICATIONS

Upon receipt of water discharge monitoring analytical reports, a comparison of effluent results with the maximum concentration limitations under the General Permit will be performed; the Discharge Monitoring report form will be completed, retained in the project file, and a copy sent to the City of Danbury Water Pollution Control Plant at the following address:

City of Danbury
Department of Public Utilities
155 Deer Hill Avenue
Danbury, CT 06810

In the event that a violation of a discharge limit occurs, the following actions will be taken:

1. Immediate verbal notification to Kenny Gulledge of CR USA, Inc. at 843-320-1171, followed by:

2. Immediate verbal notification to the City of Danbury Pollution Control Plant:

   203-748-9116 or 203-797-4539

   203-797-4615 (Evenings)

3. Completion of the CTDEP Discharge Violation Form (DEP-WD-VIOL-007 – provided in Appendix D) within 24 hours of knowledge of the violation; a copy of the recorded violation will be retained in the treatment building. Within one week of the violation, a copy of the Violation Form must be mailed to the City of Danbury Water Pollution Control Plant at the address listed above and to the Commissioner at the following address:

   DMR Section
   Water Management Bureau/ PERD
   Department of Environmental Protection
   79 Elm Street
   Hartford, CT 06106-5127

4. If the violation could be reasonably expected to cause adverse effects on the POTW operation, the system must be shut down immediately. Verbal notification to the City of Danbury Pollution Control Plant (phone numbers listed above) and to CTDEP (at 860-424-3018) must be performed immediately. Within 7 days of becoming aware of the occurrence, written notification must be provided to CTDEP and the City of Danbury (addresses listed above).

In accordance with the General Permit, immediately after the third simultaneous or consecutive, or fourth annual violation, the system will be shut down. The system will not be restarted until actions have been taken to prevent further violations and a report summarizing the actions taken (certified by a Connecticut Licensed Professional Engineer – see Section 6(e)(3) of the General Permit for required language) has been submitted to the Commissioner and to the City of Danbury Water Pollution Control Plant.

5. ADDITIONAL OM&M COMPONENTS

5.1 TRAINING

All personnel performing operations, maintenance or monitoring of the groundwater hydraulic containment system will undergo training (on equipment, controls, sampling, etc.) prior to performing activities. All staff performing site OM&M must be 40-hour HAZWOPER trained, with up to date 8-hour refresher training.

The following personnel will be responsible for ensuring proper training is given to each field staff prior to performing OM&M activities:

On-site OM&M – Bill DePascale

PLC/Telog unit & software – Andy Fitzpatrick/ Scott Reynolds

Training will be preformed by the Project Electrical Engineer on the PLC/ Telog unit interaction for the remote monitoring, including system startup, downloading data, software use, etc.

5.2 SITE SECURITY/ ACCESS

The facility is currently unoccupied, but remains secured with a chain link fence. The treatment building will be locked at all times when W&C personnel are not present at the Site. Access to the rooftop where the blowers are situated is through the stairs inside the currently vacant and secure building.

5.3 HEALTH AND SAFETY

The project's Health and Safety plan will be revised accordingly for the OM&M activities and a copy of the plan will be located in the treatment building at all times. All personnel working on-site will have reviewed the plan prior to initiating work.

5.4 EMERGENCIES

In the event of fire, explosion or other serious and/or potentially life threatening situations, all site staff and visitors must evacuate the treatment building and/or main building. Immediate notification to the fire department (911) is required in the event of a fire and/or explosion.

The emergency contact list is provided below to guide field staff during an emergency event. As noted in the site specific Health and Safety Plan, should life threatening situations be encountered during site visits, the staff is instructed to call 911 prior to any other calls.

Table 5-1 Emergency Contact List

EMERGENCY INFORMATION		
Contact	**Phone Number**	**Additional Information**
Local Police	911	
Fire Department		
Ambulance		
Local Hospital	Danbury Hospital 203-797-7000	24 Hospital Avenue Danbury, CT ** See below for Map/Directions **
Project Manager	Jeff Hamel 978-557-8150	978-317-3635 (cell)
Project Lead Technician/ Site H&S Officer	Bill DePascale (203) 271-0379	860-573-2578 (cell)
H&S Officer (Cheshire)	Dan Wolfram (203) 271-0379	
H&S Officer (Andover)	George Franklin 978-557-8150	978-317-8200 (cell)
Client Contact:	Kenny Gulledge 843-320-1171	

Directions to Danbury Hospital:

Start out going southeast (take a right) on Old Newtown Road
Turn Right onto Newtown Road (Newtown Road becomes White Street)
Turn Right onto 5th Avenue.
Turn Right onto Osborne Street
Turn Left onto Hospital Avenue

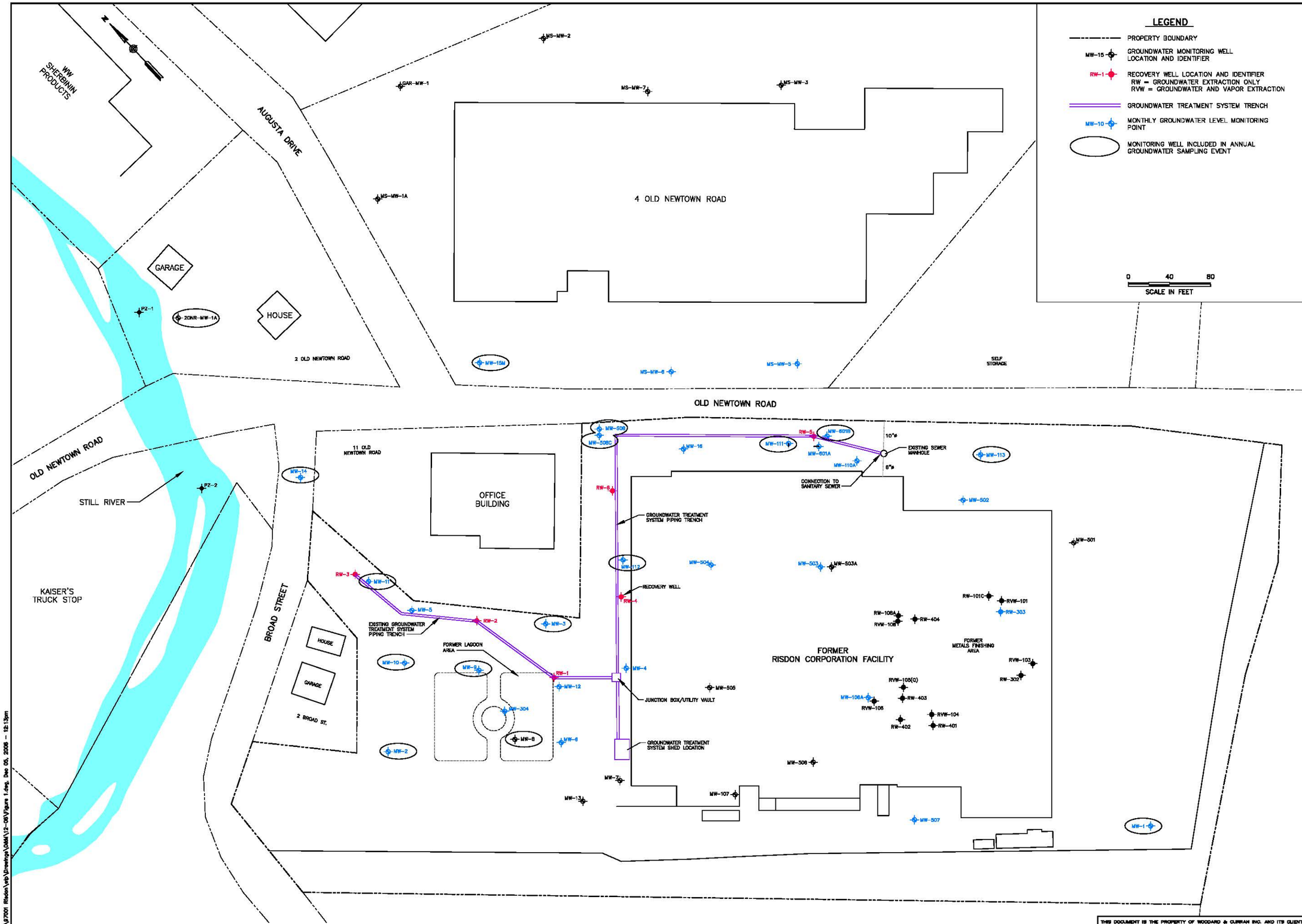

35 NEW ENGLAND BUSINESS CENTER
ANDOVER, MASSACHUSETTS 01810
888.702.5371 | www.woodardcurran.com
COMMITMENT & INTEGRITY DRIVE RESULTS

WOODARD & CURRAN

REV	DESCRIPTION	DATE

DESIGNED BY: EVR
DRAWN BY: EVR
CHECKED BY: CMR
Figure 1.dwg

GROUNDWATER RECOVERY AND MONITORING LOCATIONS

RISDON CORPORATION
DANBURY, CONNECTICUT

O&M PLAN

JOB NO.: 97001
DATE: DECEMBER 2008
SCALE: AS NOTED
SHEET: OF

FIGURE 1

THIS DOCUMENT IS THE PROPERTY OF WOODARD & CURRAN INC. AND ITS CLIENT. REPRODUCTION OR MODIFICATION WITHOUT WRITTEN PERMISSION IS PROHIBITED.

S:\97001 Risdon\wip\Drawings\O&M\12-05\Figure 1.dwg, Dec 05, 2008 - 12:13pm

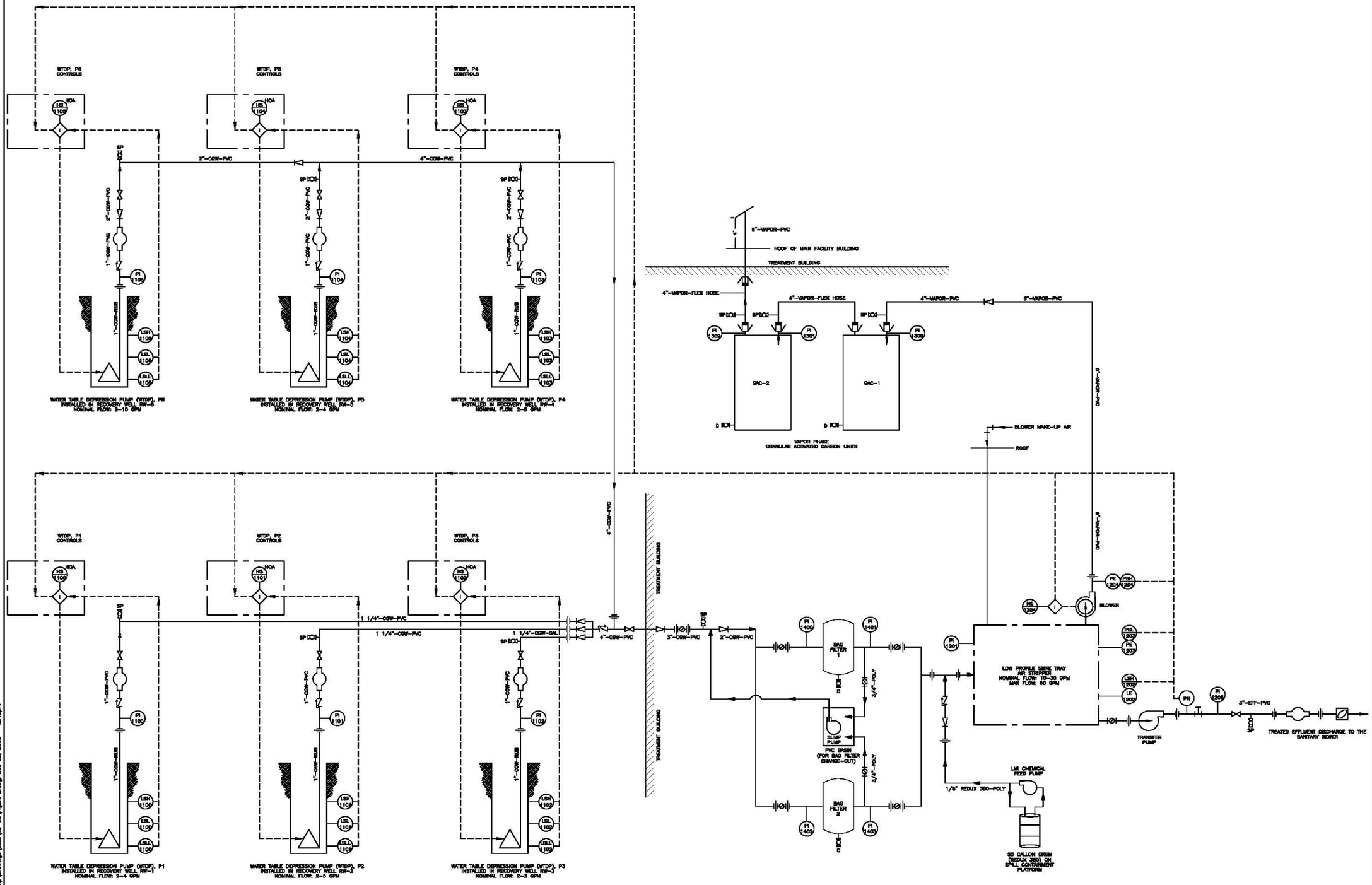

S:\97001 Risdon\Vdp\Drawings\OM&M\12-08\Figure 2.dwg, Dec 03, 2009 - 12:13pm

35 NEW ENGLAND BUSINESS CENTER
ANDOVER, MASSACHUSETTS 01810
888.702.5371 | www.woodardcurran.com

COMMITMENT & INTEGRITY DRIVE RESULTS

WOODARD & CURRAN

REV	DESCRIPTION	DATE

DESIGNED BY: CMR
DRAWN BY: EVR
CHECKED BY:
Figure 2.dwg

HYDRAULIC CONTAINMENT TREATMENT SYSTEM PIPING AND INSTRUMENTATION DIAGRAM

RISDON CORPORATION
DANBURY, CONNECTICUT

OM&M PLAN

JOB NO.: 97001
DATE: DECEMBER 2008
SCALE: N.T.S.
SHEET: OF

FIGURE 2

THIS DOCUMENT IS THE PROPERTY OF WOODARD & CURRAN INC. AND ITS CLIENT. REPRODUCTION OR MODIFICATION WITHOUT WRITTEN PERMISSION IS PROHIBITED.

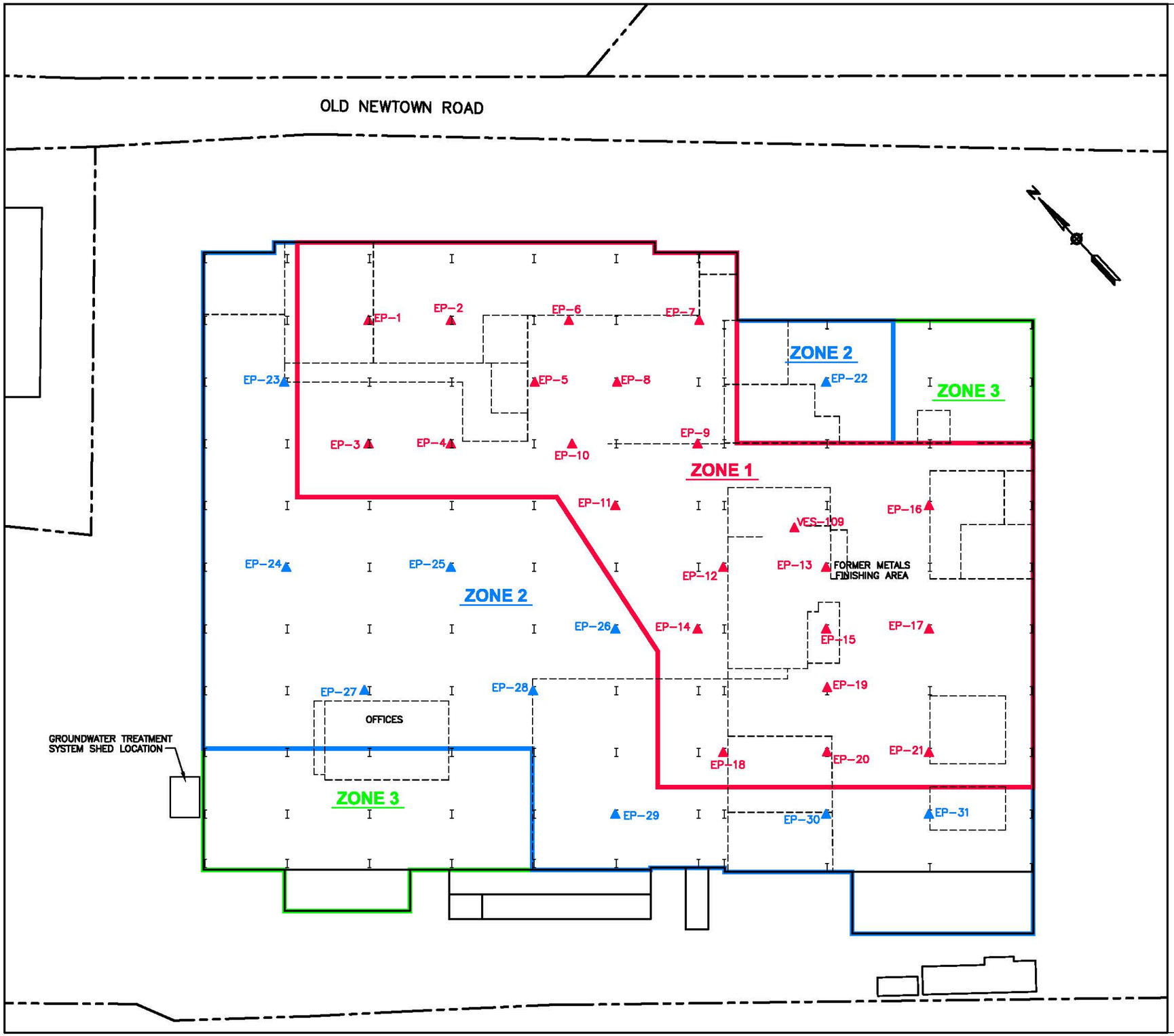

LEGEND

- PROPERTY BOUNDARY
- EXISTING INTERIOR BUILDING WALLS/FEATURES
- BUILDING COLUMN
- EP-1 ZONE 1 EXTRACTION POINT
- EP-22 ZONE 2 EXTRACTION POINT
- ZONE 1 – AREA OF HIGHEST SUB-SLAB VOC CONCENTRATIONS. APPROXIMATE 57,000 FT². 21 EXTRACTION POINTS (EPs) AT APPROXIMATE 60 FOOT CENTERS
- ZONE 2 – AREA OF MODEST SUB-SLAB VOC CONCENTRATIONS. APPROXIMATE 49,000 FT². 10 EXTRACTION POINTS (EPs) AT APPROXIMATE 100 FOOT CENTERS
- ZONE 3 – AREA OF NON-DETECT TO LOW VOC CONCENTRATIONS IN SUB-SLAB. APPROXIMATE 15,000 FT². NO SUB-SLAB EXTRACTION CONDUCTED

NOTE:

PROPERTY FEATURES ARE APPROXIMATE AND COMPILED FROM PROPERTY SURVEY LAND OF RISDON CORPORATION, DATED JULY 24, 2002, PREPARED BY CCA, LLC. AND FIELD MEASUREMENTS.

0 50 100

SCALE IN FEET

35 NEW ENGLAND BUSINESS CENTER
ANDOVER, MASSACHUSETTS 01810
866.712.5371 | www.woodardcurran.com
COMMITMENT & INTEGRITY DRIVE RESULTS
WOODARD & CURRAN

SUB-SLAB VAPOR CONTROL SYSTEM EXTRACTION POINT LAYOUT

DESIGNED BY: SLD
DRAWN BY: EVR
CHECKED BY: CMR
Figure 3.dwg

RISDON CORPORATION
15 OLD NEWTOWN ROAD
DANBURY, CONNECTICUT

OM&M PLAN

JOB NO: 97001
DATE: DECEMBER 2008
SCALE: AS NOTED

FIGURE 3

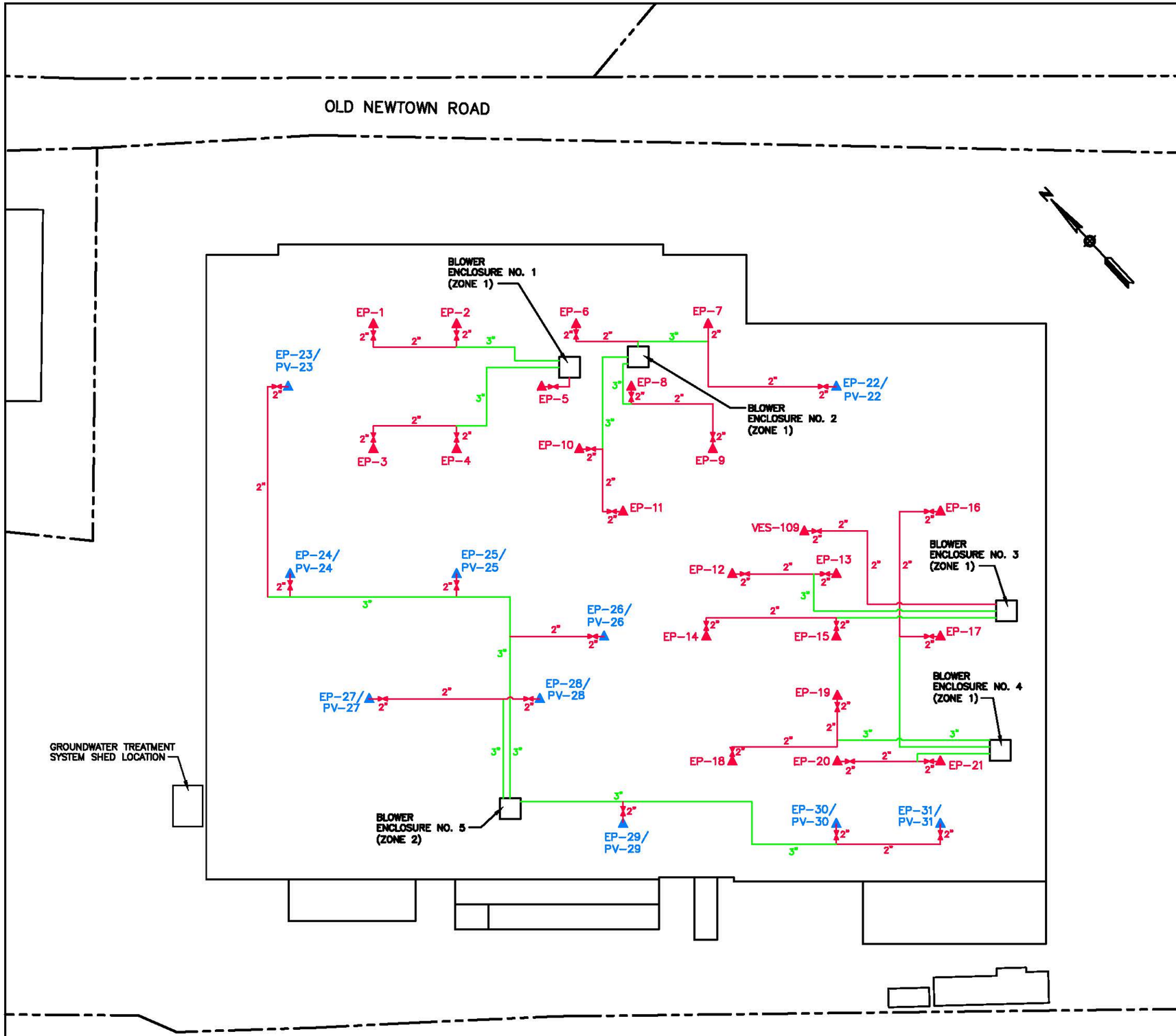

LEGEND

- PROPERTY BOUNDARY
- EP-1 ZONE 1 EXTRACTION POINT
- EP-22/PV-22 ZONE 2 EXTRACTION POINT AND PASSIVE VENT LOCATION
- 2" BALL VALVE
- 2-INCH SCH 40 PVC
- 3-INCH SCH 40 PVC

NOTES:

1. PROPERTY FEATURES ARE APPROXIMATE AND COMPILED FROM PROPERTY SURVEY LAND OF RISDON CORPORATION, DATED JULY 24, 2002, PREPARED BY CCA, LLC. AND FIELD MEASUREMENTS.
2. ALL BLOWER ENCLOSURES ARE INSTALLED ON THE ROOF.
3. NO HORIZONTAL PIPING IS INSTALLED ON THE ROOFTOP. ALL HORIZONTAL PIPING LATERALS ARE INSTALLED AND SUPPORTED IN THE CEILING AND PENETRATE THE ROOF WITHIN THE LIMITS OF THE BLOWER ENCLOSURES.

0 50 100
SCALE IN FEET

35 NEW ENGLAND BUSINESS CENTER
ANDOVER, MASSACHUSETTS 01810
866.712.6371 | www.woodardcurran.com
COMMITMENT & INTEGRITY DRIVE RESULTS
WOODARD & CURRAN

SUB-SLAB VAPOR CONTROL SYSTEM PIPING LAYOUT - ROOF

DESIGNED BY: SLD
DRAWN BY: EVR
CHECKED BY: SLD
Figure 4.dwg

RISDON CORPORATION
15 OLD NEWTOWN ROAD
DANBURY, CONNECTICUT

OM&M PLAN

JOB NO: 97001
DATE: DECEMBER 2008
SCALE: AS NOTED

FIGURE 4

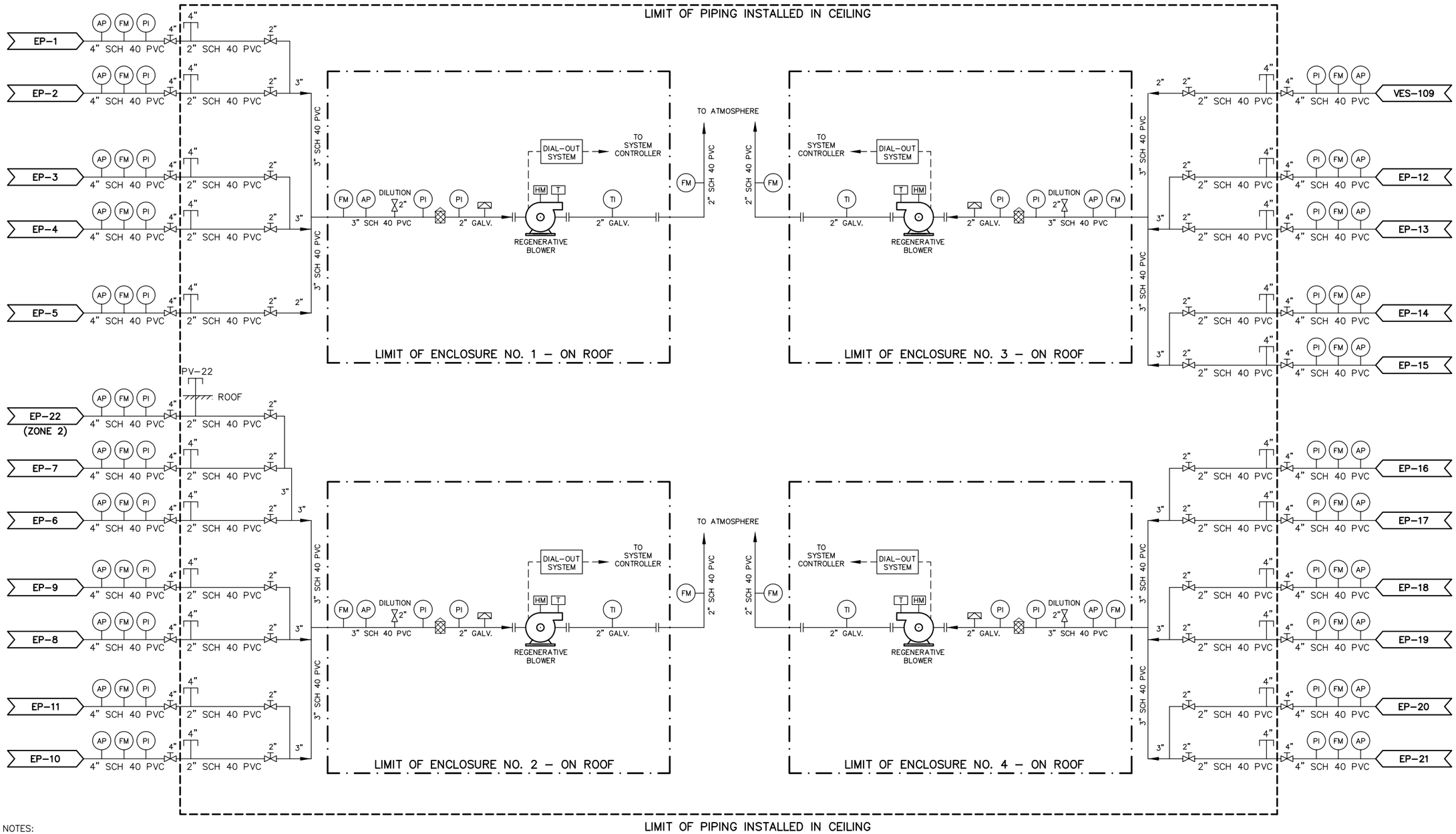

NOTES:

1. DUE TO LOCATION, ONE ZONE 2 EXTRACTION POINT (EP-22) IS CONNECTED TO THE ZONE 1 SYSTEM VIA ENCLOSURE NO. 2.
2. ALL ZONE 1 EXTRACTION POINTS DO NOT HAVE PASSIVE ROOF PENETRATIONS INSTALLED AT THIS TIME. HOWEVER, TO ACCOMMODATE A POTENTIAL FUTURE RETROFIT THE 4" TEE CONNECTION WAS INSTALLED AT THE TIME OF CONSTRUCTION. THE 4" TEE WAS FITTED WITH A ONE FOOT LENGTH OF 4" PIPE WITH A SLIP CAP (NO GLUE).
3. CONTRACTOR INSTALLED ALL PASSIVE VENT ROOF PENETRATIONS AT THE TIME OF CONSTRUCTION FOR ALL ZONE 2 EXTRACTION POINTS.

LEGEND

GATE VALVE	AP	ANALYSIS PORT	PV-22	PASSIVE VENT
BALL VALVE	FM	FLOW MEASURMENT PORT		4" TEE WITH CAP
PARTICULATE FILTER	PI	PRESSURE INDICATOR	EP-1	SSDS EXTRACTION POINT
VACUUM RELIEF VALVE	TI	TEMPERATURE INDICATOR		
HM HOUR METER	T	TIMER		

35 NEW ENGLAND BUSINESS CENTER
ANDOVER, MASSACHUSETTS 01810
866.702.6371 | www.woodardcurran.com

COMMITMENT & INTEGRITY DRIVE RESULTS

WOODARD & CURRAN

SUB-SLAB VAPOR CONTROL SYSTEM PIPING & INSTRUMENTATION DIAGRAM – ZONE 1

DESIGNED BY: SLD
DRAWN BY: EVR
CHECKED BY: SLD
Figure 5.dwg

RISDON CORPORATION
15 OLD NEWTOWN ROAD
DANBURY, CONNECTICUT

OM&M PLAN

JOB NO: 97001
DATE: DECEMBER 2008
SCALE: AS NOTED

FIGURE 5

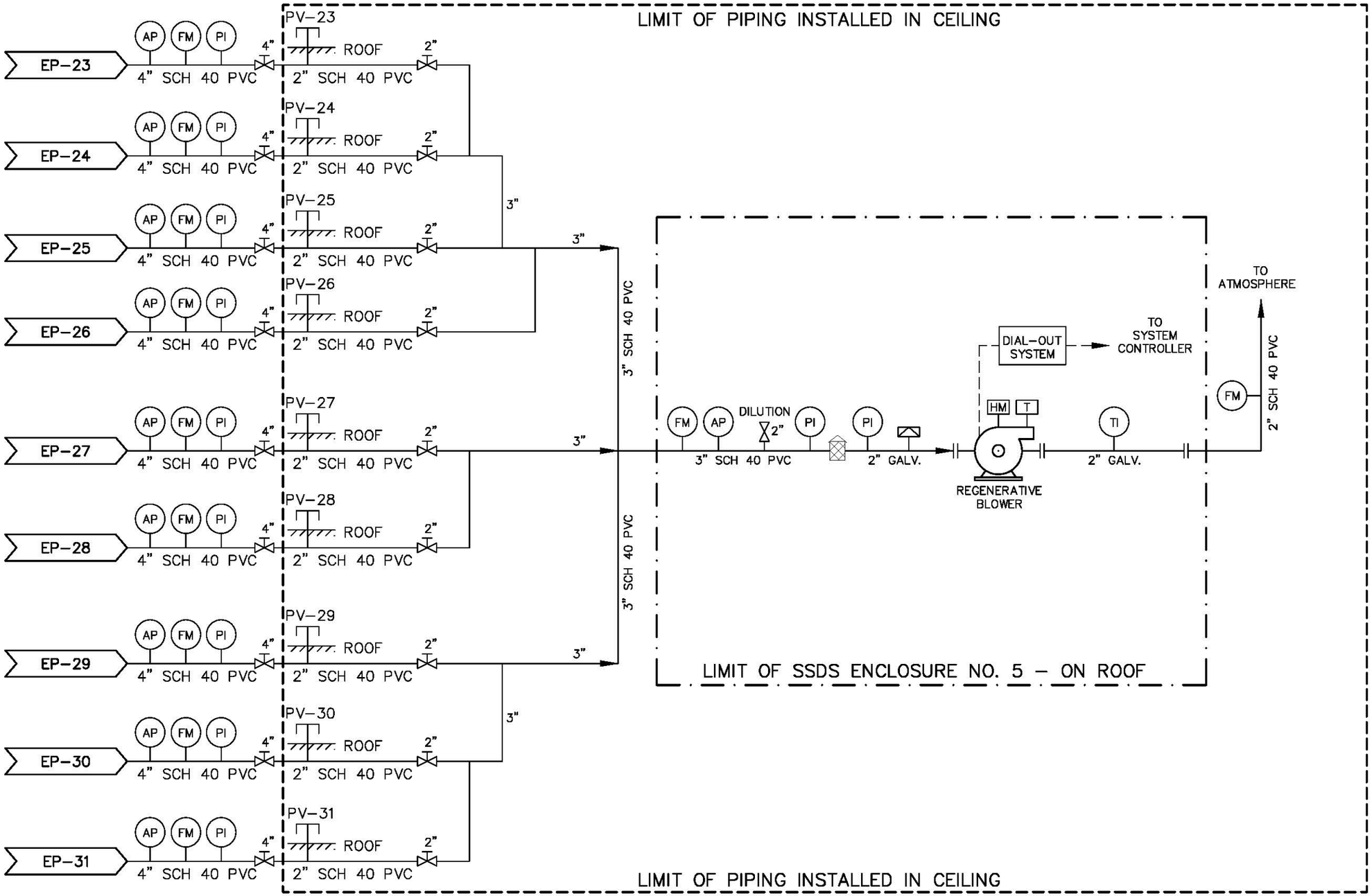

LEGEND

	GATE VALVE	AP	ANALYSIS PORT	PV-23	PASSIVE VENT
	BALL VALVE	FM	FLOW MEASURMENT PORT	T	TIMER
	PARTICULATE FILTER	PI	PRESSURE INDICATOR	HM	HOUR METER
	VACUUM RELIEF VALVE	TI	TEMPERATURE INDICATOR	EP-23	SSDS EXTRACTION POINT

NOTES:

1. DUE TO LOCATION, ONE ZONE 2 EXTRACTION POINT (EP-22) IS NOT SHOWN ON THIS FIGURE. EP-22 IS CONNECTED TO ENCLOSURE NO. 2. REFER TO FIGURE 4 FOR DETAILS.
2. CONTRACTOR INSTALLED ALL PASSIVE VENT ROOF PENETRATIONS AT THE TIME OF CONSTRUCTION FOR ALL ZONE 2 EXTRACTION POINTS.

JOB NO: 97001
DATE:DECEMBER 2008
SCALE: N.T.S.

FIGURE 6

RISDON CORPORATION
15 OLD NEWTOWN ROAD
DANBURY, CONNECTICUT

OM&M PLAN

SUB-SLAB VAPOR CONTROL SYSTEM
PIPING & INSTRUMENTATION
DIAGRAM – ZONE 2

DESIGNED BY: SLD
DRAWN BY: EVR
CHECKED BY: SLD
Figure 6.dwg

35 NEW ENGLAND BUSINESS CENTER
ANDOVER, MASSACHUSSETS 01810
866.702.6371 | www.woodardcurran.com

COMMITMENT & INTEGRITY DRIVE RESULTS

WOODARD & CURRAN

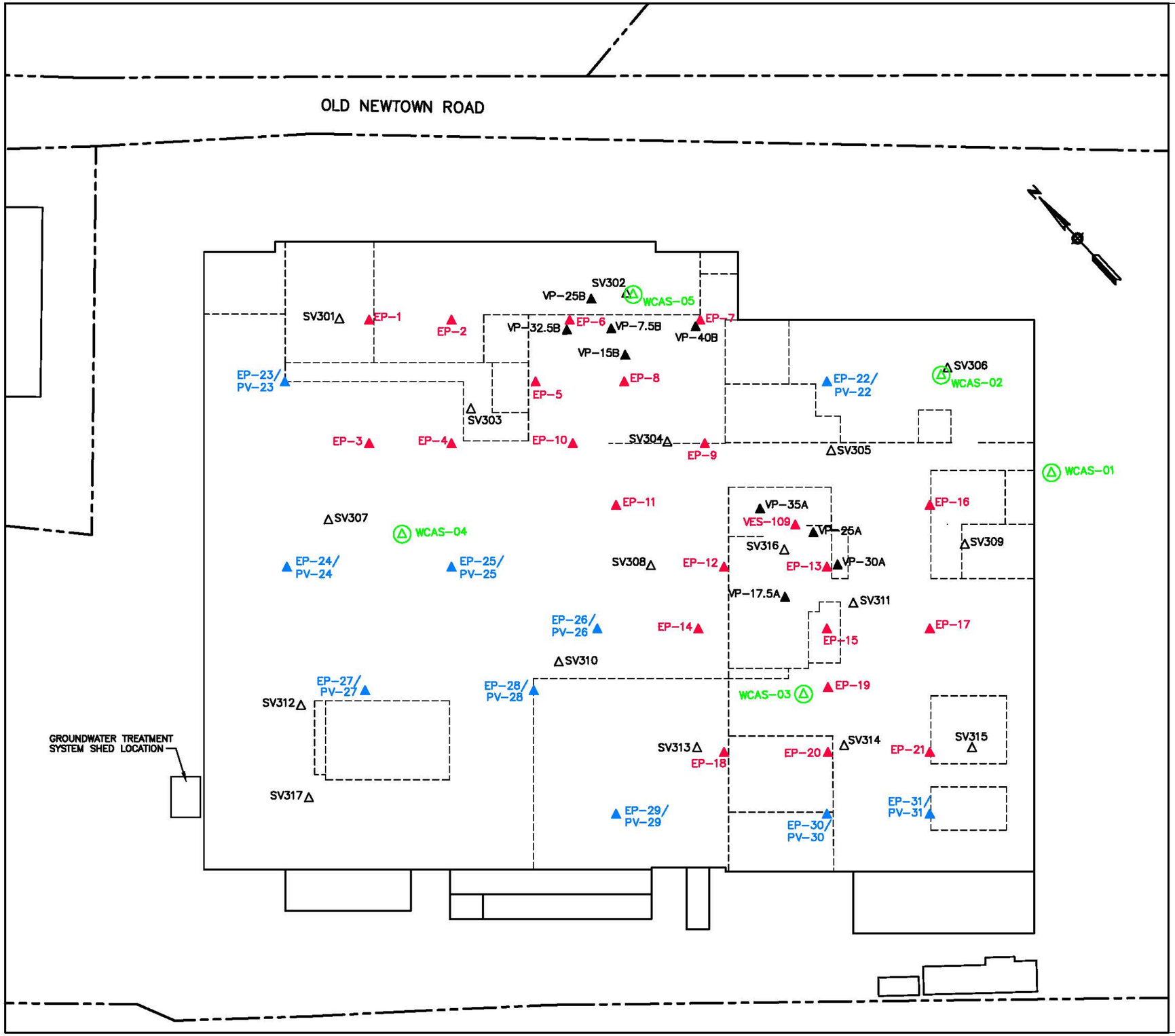

LEGEND

— — — —	PROPERTY BOUNDARY
- - - - - - - -	EXISTING INTERIOR BUILDING WALLS/FEATURES
EP-1 ▲	ZONE 1 EXTRACTION POINT
EP-22/ PV-22 ▲	ZONE 2 EXTRACTION POINT AND PASSIVE VENT LOCATION
SV301 △	SOIL VAPOR PROBE LOCATION
VP-40B ▲	PERFORMANCE EVALUATION TEST VAPOR MONITORING POINT
WCAS-01 ⓐ	INDOOR AIR SAMPLE LOCATION AND IDENTIFIER

NOTES:

1. PROPERTY FEATURES ARE APPROXIMATE AND COMPILED FROM PROPERTY SURVEY LAND OF RISDON CORPORATION, DATED JULY 24, 2002, PREPARED BY CCA, LLC. AND FIELD MEASUREMENTS.

0 50 100

SCALE IN FEET

35 NEW ENGLAND BUSINESS CENTER
ANDOVER, MASSACHUSETTS 01810
866.712.6371 | www.woodardcurran.com

COMMITMENT & INTEGRITY DRIVE RESULTS

WOODARD & CURRAN

VAPOR PROBE AND EXTRACTION POINT LOCATIONS

DESIGNED BY: SLD
DRAWN BY: EVR
CHECKED BY: CMR
Figure 7.dwg

RISDON CORPORATION
15 OLD NEWTOWN ROAD
DANBURY, CONNECTICUT

OM&M PLAN

JOB NO: 97001
DATE: DECEMBER 2008
SCALE: AS NOTED

FIGURE 7

APPENDIX A: GROUNDWATER SYSTEM MONITORING FORMS

RISDON - GROUNDWATER HYDRAULIC CONTAINMENT SYSTEM
ON-SITE OM+M LOG SHEET

Personnel on Site: _____ Date and Time: _____

Weather: Sunny Cloudy Rain Snow Temperature (^{o}F) _____

**** TO DO: File the previous month's remote monitoring log sheets.****

OPERATION

System operating upon arrival? Y N Total System Run-time to date:_____

Any alarm conditions triggered groundwater or sub-slab (check PLC panel)? Y N

If so, which ones? _____

Actions taken: _____

SYSTEM MONITORING

Gauge ID	**Location**	**Pressure** (psig)	**Gauge ID**	**Location**	**Pressure** (psig)
1201	Air Stripper influent		1400	Before Bag Filter 1	
1300	Before GAC unit 1		1401	After Bag Filter 1	
1301	Before GAC unit 2		1402	Before Bag Filter 2	
			1403	After Bag Filter 2	

REPLACED BAG FILTER ? (CIRCLE ONE) NO FILTER 1 FILTER 2

SYSTEM FLOWRATE

	Totalized Flow to Date (gallons)	
Total System Flow (gpm)	**Effluent Meter**	**PLC Panel**

GROUNDWATER DISCHARGE PERMIT MONITORING

Location	**Analyze for (circle):**	**Sample Collected**	**Time Collected**
Treatment System Effluent	VOCs, 13 pp metals, pH	Y N	
		Y N	
Combined treatment system Influent ***(BEFORE bag filters)***	VOCs, 13 pp metals, pH, hex chromium, cyanide	Y N	

****** NOTE: CHAIN OF CUSTODY MUST INDICATE THAT RESULTS ARE TO BE SENT TO CATHY ROCKWELL IN ANDOVER***

MAINTENANCE

Observe equipment operation for any potential problems. Perform and document minor or routine maintenance as needed. Report any significant or unusual problems to Cathy Rockwell as soon as possible. Refer to O&M Manual and HASP prior to performing maintenance.

Task	**Performed?**	**Describe**
Inspect/ Clean Trays	Y N	
Inspect/ Clean pump(s)	Y N	
Clean/Flush lines	Y N	
Other	Y N	

(**REMINDER: Fax BOTH PAGES to Andover once back in the office, then file original forms in the treatment building during next site visit)

RISDON - GROUNDWATER HYDRAULIC CONTAINMENT SYSTEM
ON-SITE OM+M LOG SHEET

RECOVERY WELL MONITORING

Recovery Well ID	Total Volume (gallons)	Pump Operational?		Pressure (psig)	Flowrate (gpm)	Flow Control Valve Setting	Depth to Water *(ft)*
RW-1		Y	N			% Open	
RW-2		Y	N			% Open	
RW-3		Y	N			% Open	
RW-4		Y	N			% Open	
RW-5		Y	N			% Open	
RW-6		Y	N			% Open	

HYDRAULIC CONTAINMENT MONITORING

Monitoring Well ID	Depth to Water *(ft)*	Monitoring Well ID	Depth to Water *(ft)*
MS-MW-5		MW-106A	
MS-MW-6		MW-110A	
MW-1		MW-111	
MW-2		MW-112	
MW-3		MW-113	
MW-4		MW-304	
MW-5		MW-502	
MW-6		MW-503	
MW-9		MW-504	
MW-10		MW-507	
MW-11		MW-508	
MW-12		MW-508C	
MW-14		MW-601A	
MW-15		MW-601B	
MW-16		RW-303	

AIR MONITORING (PID measurement in ppmv) - **Quarterly**

	GAC Influent	Between the Units	GAC Effluent	Carbon Changed out?	
TOV (ppmv)				Unit 1	Unit 2

COMMENTS

SCHEDULE

Action	Frequency
On-site System Monitoring	Monthly
GW discharge permit monitoring	
Effluent - Sampling and Analysis	Monthly
Influent - Sampling and Analysis	Quarterly or Semi-annually (September and March)
Air Monitoring (PID screening)	Quarterly (December, March, June, and September)
Groundwater Monitoring	Annually - August/ September
Maintenance	Monthly inspection, perform as needed.

(**REMINDER: Fax BOTH PAGES to Andover once back in the office, then file original forms in the treatment building during next site visit)

RISDON - GROUNDWATER HYDRAULIC CONTAINMENT SYSTEM

REMOTE MONITORING - OM+M LOG SHEET

Personnel Performing Monitoring _____ Date and Time: _____

OPERATION

System operating ? Y N

Total system run time to date _____ years

Major System Alarms	Alarm Sent?		Date and Time
A - System shut down	Y	N	
B - Potential hydraulic containment issue	Y	N	
C - Total flow in 24 hours exceeded	Y	N	
D - Blower fail to run	Y	N	

System Equipment	Currently on?		Operational (i.e. cycling)?	
RW-1	Y	N	Y	N
RW-2	Y	N	Y	N
RW-3	Y	N	Y	N
RW-4	Y	N	Y	N
RW-5	Y	N	Y	N
RW-6	Y	N	Y	N
Air Stripper Blower	Y	N	Y	N
Transfer Pump	Y	N	Y	N

Electrical Readings (kWh)	
_____	past week
_____	previous MTD
_____	YTD

If equipment is not operational, actions taken: _____

MONITORING

	AIR		WATER
Current Flowrate	IW	CFM	GPM
Average Weekly Flowrate	IW	CFM	GPM
Maximum flowrate in past 7 days	IW	CFM	GPM
Minimum flowrate in past 7 days	IW	CFM	GPM
Total Flow	--	--	
Current Telog Reading	NA		GALLONS
Past Week	NA		GALLONS

COMMENTS/ OBSERVATIONS/ ACTIONS TAKEN

APPENDIX B: CTDEP DISCHARGE MONITORING FORM (DEP-WD-DMR-007)

General Permit for the Discharge of Groundwater Remediation Wastewater to a Sanitary Sewer

Discharge Monitoring Report Form

Site Name:

Address:

DEP USE ONLY

Registration No._____

General Permit No._____

Facility I.D. _____

"I certify that I have personally examined and am familiar with the information submitted in this document, and I certify that based on reasonable investigation, including my inquiry of those individuals responsible for obtaining the information, the information is true, accurate and complete to the best of my knowledge and belief. I understand that a false statement made in this information may be punishable as a criminal offense, in accordance with section 22a-6 of the General Statutes, pursuant to section 53a-157 of the General Statutes, and in accordance with any other applicable statute."

Signature - Title Date

Monitoring results shall be recorded below and on the following pages. Refer to Sections 4 and 6 of this general permit for parameters required to be monitored. Parameters not required shall be marked "NA".

Date Sampled: DSN:

Parameter	Result	Limit
Daily Flow		
Chlorinated VOCs		1.0 mg/l
Total VOCs		5.0 mg/l
Oil & Grease - Hydrocarbon Fraction		100 mg/l
MTBE		1.0 mg/l
Total Lead		0.1 mg/l
Arsenic		0.1 mg/l
Barium		5.0 mg/l
Beryllium		2.0 mg/l
Boron		5.0 mg/l
Cadmium		0.1 mg/l
Chromium (total)		1.0 mg/l
Chromium (hexavalent)		0.1 mg/l
Cobalt		2.0 mg/l
Copper		1.0 mg/l
Magnesium		50 mg/l
Mercury		0.005 mg/l
Nickel		1.0 mg/l
Selenium		1.0 mg/l
Silver		0.1 mg/l
Thallium		1.0 mg/l
Tin		2.0 mg/l

Parameter	Result	Limit
Vanadium		1.0 mg/l
Zinc		1.0 mg/l
Total Cyanide		0.6 mg/l
Amenable Cyanide		0.1 mg/l
Phenols (EPA Method 625)		1.0 mg/l
Pthalate Esters (EPA Method 606)		2.0 mg/l
Polynuclear Aromatic Hydrocarbons (PAHs) (EPA Method)		0.5 mg/l
Base Neutral/Acid Extractables (BNAs) (EPA Method 625, Excluding PAHs & Phenols)		1.0 mg/l
Pesticides (EPA Method 608)		
Aldrin		1.5 ug/l
alpha-BHC		1.0 ug/l
beta-BHC		1.0 ug/l
delta-BHC		1.0 ug/l
gamma-BHC (Lindane)		2.0 ug/l
Chlordane (technical)		20 ug/l
4,4' - DDD, plus 4,4' - DDE, plus 4,4' - DDT Combined		0.2 ug/l
Dieldrin		10 ug/l
Endosulfan I		2.0 ug/l
Endosulfan II		2.0 ug/l
Endosulfan Sulfate		2.0 ug/l
Endrin		1.0 ug/l
Endrin aldehyde		1.0 ug/l
Heptachlor		0.6 ug/l
Heptachlor epoxide		0.4 ug/l
Methoxychlor		360 ug/l
Toxaphene		10 ug/l
Chlorinated Herbicides (EPA Method 615)		
2,4 D plus 2,4 DB		700 ug/l
2,4,5 T		10 ug/l
2,4,5 TP (Silvex)		10 ug/l
Dicamba		10 ug/l

PCBs (EPA Method 608) ***Sum of all detected PCBs shall not exceed 1.0 ug/l.***

Parameter	Result	Parameter	Result
PCB - 1016		*Other PCBs if present:*	
PCB - 1221			
PCB - 1232			
PCB - 1242			
PCB - 1248			
PCB - 1254			
PCB - 1260		**Total PCBs:**	

Results to be maintained on site, or be readily accessible by the permittee.

APPENDIX C: SUB-SLAB SYSTEM MONITORING FORMS

TABLE C-1
SUB-SLAB VAPOR CONTROL SYSTEM OM&M ROUTINE MONITORING SCHEDULE- MONTH 2 and BEYOND
15 Old Newtown Road, Danbury, Connecticut

System	Description	Sample Type	Parameter	Sample Location [1]	Operating Time [2]	Frequency [2]	Analytical Method	Comments
Equipment Enclosures	Blower Influent	Process Vapor	Vacuum, Flow, TVOC-PID	Blower Inlet	Month 2 and Beyond	Monthly	Magnehelic gauge, hot wire anemometer, Photoionization Detector (PID)	Used to assess general vapor mitigation system performance
	Blower Effluent	Process Vapor	Temperature, Flow	Discharge Vent	Month 2 and Beyond	Monthly	Fixed dial gauge, hot wire anemometer	Used to assess blower performance
		Process Vapor	Individual VOCs	Discharge Vent at each Enclosure	Month 2 and Beyond	Annually	Summa canister (CT RCP TO-15 list, plus Freon-113)	Sample results will be compared to discharge limits to verify that offgas controls are not required
	Particulate Filter	Process Vapor	Differential pressure	Filter	Month 2 and Beyond	Monthly	Magnehelic gauge	Used to indicate when the filter media requires replacement
	Runtime Meter	Electronic	Hours	Each Control Panel	Month 2 and Beyond	Monthly	Electric Hour Meter	The recorded run time of each blower will be compared to the time period between site checks to confirm that the blower was operational for the entire time period
Extraction Points	Individual Extraction Point	Soil Gas	Vacuum, Flow, TVOC-PID	EP-1 thru EP-31 and VES-109	Months 2 thru 6	Monthly	Magnehelic gauge, hot wire anemometer, Photoionization Detector (PID)	Used to assess relative vapor contaminant distribution beneath the building and to optimize vapor mitigation system performance
		Soil Gas	Vacuum	EP-1 thru EP-31 and VES-109	Month 7 and Beyond	Quarterly	Magnehelic gauge	
		Soil Gas	Flow, TVOC-PID	EP-1 thru EP-31 and VES-109	Month 7 and Beyond	Quarterly	Hot wire anemometer, PID	
Vapor Probes	Individual Vapor Probe	Soil Gas	Vacuum	SV301 thru SV317, and (9) Pilot Study VPs	Months 2 thru 6	Monthly	Magnehelic gauge	Readings will only be collected at accessible and/or appropriate locations
		Soil Gas	TVOC-PID	SV301 thru SV317, and (9) Pilot Study VPs	Months 2 thru 6	Quarterly	PID	
		Soil Gas	Vacuum, TVOC-PID	SV301 thru SV317, and (9) Pilot Study VPs	Month 7 and Beyond	Quarterly	Magnehelic gauge and PID	
Indoor Air Testing	Representative Building Locations	Ambient Indoor Air	Target VOCs (PCE, TCE)	Ambient at WCAS-1 through WCAS-5	Month 2 and Beyond	Annually	Summa canister (CT RCP TO-15 list, plus Freon-113)	To assess the progress of the vapor mitigation system

Notes:
1. Depending on the performance of the system, select areas may not require continued operation and therefore, monitoring in these areas may be reduced and/or eliminated upon approval by the Agency.
2. During each semi-annual reporting period, an evaluation will be performed on the need for supplemental or a reduction in monitoring.

TABLE C-2
SUB-SLAB VAPOR CONTROL SYSTEM OM&M SYSTEM CHECKLIST
ZONE 1 - SSDS ENCLOSURE No. 1
15 Old Newtown Road, Danbury, Connecticut

Operator:_____ **Date:**_____

Location	Time	Vacuum / Pressure (in-W.C.)	Measured Velocity (ft/min)	SSDS Flowrate [*] (scf/min)	TVOC-PID Concentration (ppm_v)	Temp (deg-F)
SSDS Blower 1 Inlet						
SSDS Blower 1 Outlet						
SSDS Enclosure 1						

* To calculate the SSDS Blower inlet flowrate (3-inch pipe) multiply the measured velocity by 0.0491 (Q = 3.14 * $(3/12)^{\wedge 2}$ / 4 * Velocity)
* To calculate the SSDS Blower outlet flowrate (2-inch pipe) multiply the measure velocity by 0.0218 (Q = 3.14 * $(2/12)^{\wedge 2}$ / 4 * Velocity)

	Pre-Filter	Post Filter	dP (inlet - outlet)
Particulate Filter Differential Pressure (in-W.C.)			

SSDS Blower 1 Dilution (% open)	ON / OFF			Blower Runtime (Hours)	
SSDS Blower Timer Settings	ON / OFF	List Days ON		Hours per day ON	

Extraction Point ID	Time	Vacuum (in-W.C.)	Measured Velocity (ft/min)	SSDS Flowrate [**] (scf/min)	TVOC-PID Concentration (ppm_v)	Status (% ON or OFF)
ZONE 1 SSDS						
EP-1						
EP-2						
EP-3						
EP-4						
EP-5						
				Total Flow		(as a check compare to SSDS Inlet flow)

** To calculate the SSDS flowrate (4-inch pipe) multiply the measured velocity by 0.0872 (Q = 3.14 * $(4/12)^{\wedge 2}$ / 4 * Velocity)

Notes:

TABLE C-2
SUB-SLAB VAPOR CONTROL SYSTEM OM&M SYSTEM CHECKLIST
ZONE 1 - SSDS ENCLOSURE No. 2
15 Old Newtown Road, Danbury, Connecticut

Operator:_____ **Date:**_____

Location	Time	Vacuum / Pressure (in-W.C.)	Measured Velocity (ft/min)	SSDS Flowrate [*] (scf/min)	TVOC-PID Concentration (ppm_v)	Temp (deg-F)
SSDS Blower 2 Inlet						
SSDS Blower 2 Outlet						
SSDS Enclosure 2						

* To calculate the SSDS Blower inlet flowrate (3-inch pipe) multiply the measured velocity by 0.0491 (Q = 3.14 * $(3/12)^{\wedge 2}$ / 4 * Velocity)
* To calculate the SSDS Blower outlet flowrate (2-inch pipe) multiply the measure velocity by 0.0218 (Q = 3.14 * $(2/12)^{\wedge 2}$ / 4 * Velocity)

	Pre-Filter	Post Filter	dP (inlet - outlet)
Particulate Filter Differential Pressure (in-W.C.)			

SSDS Blower 2 Dilution (% open)	ON / OFF			Blower Runtime (Hours)	

SSDS Blower Timer Settings	ON / OFF	List Days ON		Hours per day ON	

Extraction Point ID	Time	Vacuum (in-W.C.)	Measured Velocity (ft/min)	SSDS Flowrate [**] (scf/min)	TVOC-PID Concentration (ppm_v)	Status (% ON or OFF)
ZONE 1 SSDS						
EP-6						
EP-7						
EP-8						
EP-9						
EP-10						
EP-11						
ZONE 2 SSDS						
EP-22						
			Total Flow		(as a check compare to SSDS Inlet flow)	

** To calculate the SSDS flowrate (4-inch pipe) multiply the measured velocity by 0.0872 (Q = 3.14 * (4/12)^2 / 4 * Velocity)

Notes:

TABLE C-2
SUB-SLAB VAPOR CONTROL SYSTEM OM&M SYSTEM CHECKLIST
ZONE 1 - SSDS ENCLOSURE No. 3
15 Old Newtown Road, Danbury, Connecticut

Operator:_____ **Date:**_____

Location	Time	Vacuum / Pressure (in-W.C.)	Measured Velocity (ft/min)	SSDS Flowrate [*] (scf/min)	TVOC-PID Concentration (ppm_v)	Temp (deg-F)
SSDS Blower 3 Inlet						
SSDS Blower 3 Outlet						
SSDS Enclosure 3						

* To calculate the SSDS Blower inlet flowrate (3-inch pipe) multiply the measured velocity by 0.0491 (Q = 3.14 * $(3/12)^2$ / 4 * Velocity)
* To calculate the SSDS Blower outlet flowrate (2-inch pipe) multiply the measure velocity by 0.0218 (Q = 3.14 * $(2/12)^2$ / 4 * Velocity)

	Pre-Filter	Post Filter	dP (inlet - outlet)
Particulate Filter Differential Pressure (in-W.C.)			

SSDS Blower 3 Dilution (% open)	ON / OFF			Blower Runtime (Hours)	

SSDS Blower Timer Settings	ON / OFF	List Days ON		Hours per day ON	

Extraction Point ID	Time	Vacuum (in-W.C.)	Measured Velocity (ft/min)	SSDS Flowrate [**] (scf/min)	TVOC-PID Concentration (ppm_v)	Status (% ON or OFF)
ZONE 1 SSDS						
VES-109						
EP-12						
EP-13						
EP-14						
EP-15						
				Total Flow		(as a check compare to SSDS Inlet flow)

** To calculate the SSDS flowrate (4-inch pipe) multiply the measured velocity by 0.0872 (Q = 3.14 * (4/12)^2 / 4 * Velocity)

Notes:

TABLE C-2
SUB-SLAB VAPOR CONTROL SYSTEM OM&M SYSTEM CHECKLIST
ZONE 1 - SSDS ENCLOSURE No. 4
15 Old Newtown Road, Danbury, Connecticut

Operator:_____ **Date:**_____

Location	Time	Vacuum / Pressure (in-W.C.)	Measured Velocity (ft/min)	SSDS Flowrate [*] (scf/min)	TVOC-PID Concentration (ppm_v)	Temp (deg-F)
SSDS Blower 4 Inlet						
SSDS Blower 4 Outlet						
SSDS Enclosure 4						

* To calculate the SSDS Blower inlet flowrate (3-inch pipe) multiply the measured velocity by 0.0491 (Q = 3.14 * $(3/12)^2$ / 4 * Velocity)
* To calculate the SSDS Blower outlet flowrate (2-inch pipe) multiply the measure velocity by 0.0218 (Q = 3.14 * $(2/12)^2$ / 4 * Velocity)

	Pre-Filter	Post Filter	dP (inlet - outlet)
Particulate Filter Differential Pressure (in-W.C.)			

SSDS Blower 4 Dilution (% open)	ON / OFF			Blower Runtime (Hours)	

SSDS Blower Timer Settings	ON / OFF	List Days ON		Hours per day ON	

Extraction Point ID	Time	Vacuum (in-W.C.)	Measured Velocity (ft/min)	SSDS Flowrate [**] (scf/min)	TVOC-PID Concentration (ppm_v)	Status (% ON or OFF)
ZONE 1 SSDS						
EP-16						
EP-17						
EP-18						
EP-19						
EP-20						
EP-21						
				Total Flow		(as a check compare to SSDS Inlet flow)

** To calculate the SSDS flowrate (4-inch pipe) multiply the measured velocity by 0.0872 (Q = 3.14 * (4/12)^2 / 4 * Velocity)

Notes:

TABLE C-2
SUB-SLAB VAPOR CONTROL SYSTEM OM&M SYSTEM CHECKLIST
ZONE 2 - SSDS ENCLOSURE No. 5
15 Old Newtown Road, Danbury, Connecticut

Operator:_____ **Date:**_____

Location	Time	Vacuum / Pressure (in-W.C.)	Measured Velocity (ft/min)	SSDS Flowrate [*] (scf/min)	TVOC-PID Concentration (ppm_v)	Temp (deg-F)
SSDS Blower 5 Inlet						
SSDS Blower 5 Outlet						
SSDS Enclosure 5						
Ambient						

* To calculate the SSDS Blower inlet flowrate (3-inch pipe) multiply the measured velocity by 0.0491 (Q = 3.14 * (3/12)^2 / 4 * Velocity)
* To calculate the SSDS Blower outlet flowrate (2-inch pipe) multiply the measure velocity by 0.0218 (Q = 3.14 * (2/12)^2 / 4 * Velocity)

	Pre-Filter	Post Filter	dP (inlet - outlet)
Particulate Filter Differential Pressure (in-W.C.)			

SSDS Blower 5 Dilution (% open)	ON / OFF			Blower Runtime (Hours)	

SSDS Blower Timer Settings	ON / OFF	List Days ON		Hours per day ON	

Extraction Point ID	Time	Vacuum (in-W.C.)	Measured Velocity (ft/min)	SSDS Flowrate [**] (scf/min)	TVOC-PID Concentration (ppm_v)	Status (% ON or OFF)
ZONE 2 SSDS						
EP-22 (Located in SSDS No. 2)						
EP-23						
EP-24						
EP-25						
EP-26						
EP-27						
EP-28						
EP-29						
EP-30						
EP-31						

Total Flow _____ (as a check compare to SSDS Inlet flow)

** To calculate the SSDS flowrate (4-inch pipe) multiply the measured velocity by 0.0872 (Q = 3.14 * (4/12)^2 / 4 * Velocity)

Notes:

TABLE C-2
SUB-SLAB VAPOR CONTROL SYSTEM OM&M SYSTEM CHECKLIST
VAPOR PROBES
15 Old Newtown Road, Danbury, Connecticut

Operator:_____ **Date:**_____

Vapor Probe ID	Time	Vacuum (in-W.C.)	TVOC-PID Concentration (ppm_v)
ZONE 1			
SV301			
SV302 (aka. VP-20B)			
SV303			
SV304			
SV305			
SV308			
SV309			
SV311			
SV313			
SV314			
SV315			
SV316			

Notes:

Vapor Probe ID	Time	Vacuum (in-W.C.)	TVOC-PID Concentration (ppm_v)
ZONE 1 - PET AREA A			
VP-17.5A			
VP-25A			
VP-30A			
VP-35A (Destroyed)			
ZONE 1 - PET AREA B			
VP-7.5B			
VP-15B			
VP-25B			
VP-32.5B			
VP-40B			
ZONE 2			
SV307			
SV310			
SV312			
ZONE 3 (as needed)			
SV306			
SV317			

APPENDIX D: CTDEP VIOLATION FORM (DEP-WD-VIOL-007)

General Permit for the Discharge of Groundwater Remediation Wastewater to a Sanitary Sewer

Violation Form

DEP USE ONLY
Registration No._____
General Permit No._____
Facility I.D. _____

Site Name:

Address:

"I certify that I have personally examined and am familiar with the information submitted in this document, and I certify that based on reasonable investigation, including my inquiry of those individuals responsible for obtaining the information, the information is true, accurate and complete to the best of my knowledge and belief. I understand that a false statement made in this information may be punishable as a criminal offense, in accordance with section 22a-6 of the General Statutes, pursuant to section 53a-157 of the General Statutes, and in accordance with any other applicable statute."

Signature - Title _____ Date _____

Monitoring results shall be recorded below and on the following pages. Refer to Sections 4 and 6 of this general permit for parameters required to be monitored. Parameters not required shall be marked "NA".

Date Sampled: DSN:

Parameter	Result	Limit
Daily Flow		
Chlorinated VOCs		1.0 mg/l
Total VOCs		5.0 mg/l
Oil & Grease - Hydrocarbon Fraction		100 mg/l
MTBE		1.0 mg/l
Total Lead		0.1 mg/l
Arsenic		0.1 mg/l
Barium		5.0 mg/l
Beryllium		2.0 mg/l
Boron		5.0 mg/l
Cadmium		0.1 mg/l
Chromium (total)		1.0 mg/l
Chromium (hexavalent)		0.1 mg/l
Cobalt		2.0 mg/l
Copper		1.0 mg/l
Magnesium		50 mg/l
Mercury		0.005 mg/l
Nickel		1.0 mg/l
Selenium		1.0 mg/l
Silver		0.1 mg/l
Thallium		1.0 mg/l
Tin		2.0 mg/l
Parameter	**Result**	**Limit**

Vanadium		1.0 mg/l
Zinc		1.0 mg/l
Total Cyanide		0.6 mg/l
Amenable Cyanide		0.1 mg/l
Phenols (EPA Method 625)		1.0 mg/l
Pthalate Esters (EPA Method 606)		2.0 mg/l
Polynuclear Aromatic Hydrocarbons (PAHs) (EPA Method)		0.5 mg/l
Base Neutral/Acid Extractables (BNAs) (EPA Method 625, Excluding PAHs & Phenols)		1.0 mg/l
Pesticides (EPA Method 608)		
Aldrin		1.5 ug/l
alpha-BHC		1.0 ug/l
beta-BHC		1.0 ug/l
delta-BHC		1.0 ug/l
gamma-BHC (Lindane)		2.0 ug/l
Chlordane (technical)		20 ug/l
4,4' - DDD, plus 4,4' - DDE, plus 4,4' - DDT Combined		0.2 ug/l
Dieldrin		10 ug/l
Endosulfan I		2.0 ug/l
Endosulfan II		2.0 ug/l
Endosulfan Sulfate		2.0 ug/l
Endrin		1.0 ug/l
Endrin aldehyde		1.0 ug/l
Heptachlor		0.6 ug/l
Heptachlor epoxide		0.4 ug/l
Methoxychlor		360 ug/l
Toxaphene		10 ug/l
Chlorinated Herbicides (EPA Method 615)		
2,4 D plus 2,4 DB		700 ug/l
2,4,5 T		10 ug/l
2,4,5 TP (Silvex)		10 ug/l
Dicamba		10 ug/l

PCBs (EPA Method 608) ***Sum of all detected PCBs shall not exceed 1.0 ug/l.***

Parameter	Result	Parameter	Result
PCB - 1016		*Other PCBs if present:*	
PCB - 1221			
PCB - 1232			
PCB - 1242			
PCB - 1248			
PCB - 1254			
PCB - 1260		**Total PCBs:**	

Submit to: DMR SECTION
BUREAU OF MATERIALS MANAGEMENT AND COMPLIANCE ASSURANCE
DEPARTMENT OF ENVIRONMENTAL PROTECTION
79 ELM STREET, HARTFORD, CT 06106-5127

Summarize corrective actions on additional sheets. Results to be maintained on site, and be submitted as required by Section 6(e)(1) and (2) of this general permit.