Prepared for:
Bostik, Inc. [U.S. EPA ID# MAD 001 039 767]
211 Boston Street
Middleton, MA

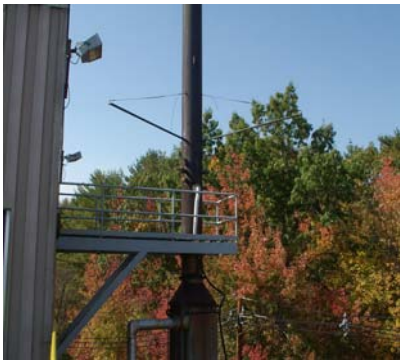

Part B Permit Application
Volume I of III

ENSR Corporation
December 8, 2006
Document No.: 00963-035-600

ENSR | AECOM

RDMS DocID 109459

December 7, 2006

Mr. Stephen Yee
U.S. EPA Region 1 – New England
Hazardous Waste Unit – Office of Ecosystem Protection
One Congress Street – Suite 1100 (CHW)
Boston, MA 02114-2023

SUBJECT: Bostik, Inc. – Middleton, MA: Updated Part B Application

Dear Mr. Yee:

Bostik, Inc. is pleased to submit a revised and updated Part B permit application for the Struthers Wells Industrial Boiler operations at our Middleton, MA location. This updated application is being submitted in response to your letter dated May 31, 2006 and subsequent e-mail dated October 5, 2006 granting an extension for submittal until December 8, 2006. The enclosed application is comprised of three (3) volumes identified as follows:

- Volume I – Part B Permit Application
- Volume II – Trial Burn Plan for the Polyester Burner Unit
- Volume III – Screening Level Human Health Risk Assessment Protocol

Copies of this 3-volume application are being distributed as outlined on page 6 of your May 31 letter:

- U.S. EPA Region 1 (Stephen Yee) – 3 copies
- MA DEP - Boston, MA (Jim Miller) – 1 copy
- MA DEP - Wilmington, MA (Tom Parks) – 1 copy

Should you have any questions, please call me and I will provide any additional details required.

Sincerely,

Daniel F. Welch
Health Safety Environment & Quality Manager
High Performance Polymers Division

enclosures

Bostik, Inc.
211 Boston Street
Middleton, MA 01949-2128 USA
Tel: 978.750.7402 - Fax: 978.750.7405
www.bostik-us.com

Prepared for:
Bostik, Inc. [U.S. EPA ID# MAD 001 039 767]
211 Boston Street
Middleton, MA

Part B Permit Application
Volume I of III

Prepared By

Reviewed By

ENSR Corporation
December 8, 2006
Document No.: 00963-035-600

ENSR | AECOM

Contents

Section A - Part A General Information Requirements **1**

A.1 RCRA Activities Conducted [40 CFR 270.13(a),(m)] 1
A.2 Facility Location [40 CFR 270.13(b)(1)] 1
A.3 Industrial Classification [40 CFR 270.13(c)] 1
A.4 Ownership Status [40 CFR 270.13(d),(e)] 1
A.5 Facility Status [40 CFR 270.13(f),(g)] 1
A.6 Hazardous Waste Processes [40 CFR 270.13(i)] 1
A.7 Hazardous Waste Specifications [40 CFR 270.13(j)] 1
A.8 Listing of Other Permits [40 CFR 270.13(k)] 1

Section B - Facility Description **1**

B.1 General Description [40 CFR 270.14(b)(1)] 1
B.2 Topographic Map [40 CFR 270.14] 2
B.3 Facility Location Information [40 CFR 270.14(b)(11); 264.18] 2
B.4 Traffic Patterns [40 CFR 270.14(b)(10)] 2

Section C - Waste Characteristics **1**

C.1 Chemical and Physical Analyses [40 CFR 270.14(b)(2); 264.13(a)] 1
C.1.1 Containerized Waste 1
C.1.2 Waste in Tank Systems 1
C.1.3 Waste in Piles 1
C.1.4 Landfilled Wastes 1
C.1.5 Wastes Incinerated and Wastes Used in Performance Tests 1
C.1.6 Wastes to be Land Treated 1
C.1.7 Wastes in Miscellaneous Treatment Units 1
C.1.8 Wastes in Boilers and Industrial Furnaces (BIFs) 2
C.1.9 Wastes on Drip Pads 2

C.2 Waste Analysis Plan [40 CFR 270.14(b)(3); 264.13(b),(c)] 2
C.2.1 Parameters and Rationale 2
C.2.2 Test Methods 3
C.2.3 Sampling Methods 3
C.2.4 Frequency of Analyses 4
C.2.5 Additional Requirements for Wastes Generated Off Site 5
C.2.6 Additional Requirements for Ignitable, Reactive or Incompatible Wastes 5
C.2.7 Additional Requirements Pertaining to BIF Facilities 5

C.3 Waste Analysis Requirements Pertaining to Land Disposal Restrictions [40 CFR 270.14(b)(3); 264.13; 264.73 and Part 268] 5
C.3.1 Waste Analysis 5
C.3.2 Notification, Certification and Recordkeeping Requirements 7
C.3.3 Requirement Pertaining to the Storage of Restricted Wastes 8
C.3.4 Exemptions, Extensions and Variances to Land Disposal Restrictions 9

Section D - Process Information 1

D.1 Containers [40 CFR 270.15; 264.170] 1
D.2 Tank systems [40 CFR 270.16; 264.191 – 194] 1
D.2.1 Tank Systems Descriptions 1
D.2.2 Existing Tank Systems 2
D.2.3 New Tank System 2
D.2.4 Containment and Detection of Releases 3
D.2.5 Controls and Practices to Prevent Spills and Overflows 5
D.3 Waste Piles [40 CFR 270.18 and 264.250 – 259] 5
D.4 Surface Impoundments [40 CFR 270.17(a)] 6
D.5 Incinerators [40 CFR 270.19; 264.340; and 264.351] 6
D.6 Landfills [40 CFR 270.21 and 264.300 – 317] 6
D.7 Land Treatment [40 CFR 270.20 and 264.270 – 283] 6
D.8 Miscellaneous Units [40 CFR 270.23 and 264.601] 6
D.9 Boilers and Industrial Furnaces [40 CFR 270.22 and 266.100 – 112] 6
D.9.1 Waivers / Exemptions 6
D.9.2 Pre-Trial Burn Requirements for New BIFs 7
D.9.3 Trial Burn Requirements for All BIFs 7
D.9.4 Trial Burn Results 7
D.9.5 Post-Trial Burn Requirements for New BIFs 7
D.9.6 Data-in-Lieu-of Trial Burn 7
D.9.7 Alternative Hydrocarbons Limit for Industrial Furnaces 7
D.9.8 Alternative Metals Implementation Approach 8
D.9.9 Monitoring Requirements 8
D.9.10 Automatic Waste Feed Cutoff System 8
D.9.11 Direct Transfer Standards 8
D.9.12 Bevill Residues 9

Section E - Groundwater Monitoring [40 CFR 270.14(c) 1

Section F - Procedures to Prevent Hazards 1

F.1 Security [40 CFR 270.14(b)(4); 264.14] 1

F.2 Inspection Schedule [40 CFR 270.14(b)(4); 264.14] 1
F.2.1 General Inspection Requirements 1
F.2.2 Specific Process Inspection Requirements 2
F.3 Waiver or Documentation of Preparedness and Prevention Requirements [40 CFR 270.14(b)(6); 264.32(a)-(d)] 5
F.3.1 Equipment Requirements 5
F.3.2 Aisle Space Requirement 7
F.4 Prevention Procedures, Structures and Equipment [40 CFR 270.14] 7
F.4.1 Unloading Operations 7
F.4.2 Run-Off 7
F.4.3 Water Supplies 8
F.4.4 Equipment and Power Failure 8
F.4.5 Personal Protective Equipment (PPE) 8
F.5 Prevention of Reaction of Ignitable, Reactive and Incompatible Wastes [40 CFR 270.14(b)(9)] 8

Section G - Contingency Plan 1
G.1 General Information [40 CFR 270.14(b)(7)] 2
G.2 Emergency Coordinators [40 CFR 270.14(b)(7); 264.52(d); 264.55] 2
G.3 Implementation [40 CFR 270.14(b)(7); 264.52(a); 264.56(d)] 3
G.4 Emergency Actions [40 CFR 270.14(b)(7); 264.56] 3
G.4.1 Notification 3
G.4.2 Identification of Hazardous Materials 4
G.4.3 Assessment 4
G.4.4 Control Procedures 5
G.4.5 Prevention of Recurrence of Spread of Fires, Explosions or Releases 6
G.4.6 Storage, Treatment and Disposal of Released Material 6
G.4.7 Incompatible Waste 6
G.4.8 Post-Emergency Equipment Management 7
G.4.9 Container Spills and Leakage 7
G.4.10 Tank Spills and Leakage 7
G.4.11 Surface Impoundment Spills and Leakage 9
G.4.12 Containment Building Leaks 9
G.4.13 Drip Pad Spills and Leakage 10
G.5 Emergency Equipment [40 CFR 270.14(b)(7); 264.52(e)] 10
G.6 Arrangements with Local Authorities [40 CFR 270.14(b)(7); 264.37; 264.52(c)] 12
G.7 Evacuation Plan for Facility Personnel [40 CFR 270.14(b)(7); 264.52(f)] 12
G.8 Required Report Procedures [40 CFR 270.14(b)(7); 264.56(j)] 12
G.9 Location and Distribution of Contingency Plan [40 CFR 270.14(b)(7); 264.53] 13

Section H - Personnel Training **1**

H.1 Outline of Introductory and Continuing Training Program [40 CFR 270.14(b)(12); 264.16(a)(1)] 1
- **H.1.1** Job Title / Job Description 1
- **H.1.2** Description of How Training Will be Designed to Meet Actual Job Tasks 3
- **H.1.3** Training Director 3
- **H.1.4** Relevance of Training to Job Position 3
- **H.1.5** Training for Emergency Response 5

H.2 Maintenance of Training Records and Documentation [40 CFR 270.14(b)(12); 264.16(b),(d)(4),(e)] 5

Section I - Closure/Post-Closure Plans and Financial Requirements **1**

I.1 Closure Plans [40 CFR 270.14(b)(13)] 1
- **I.1.1** Closure Performance Standard 1
- **I.1.2** Time and Activities Required for Partial and Final Closure Activities 2
- **I.1.3** Maximum Waste Inventory 2
- **I.1.4** Schedule for Closure 3
- **I.1.5** Closure Procedures 4

I.2 Post-Closure Plans [40 CFR 270.14(b)(13)] 10

I.3 Notices Required for Disposal Facilities [40 CFR 270.14(b)(13)] 10

I.4 Closure Cost Estimate [40 CFR 270.14(b)(15); 264.142] 10

I.5 Financial Assurance for Closure [40 CFR 270.14(b)(15); 264.143; 264.151] 11
- **I.5.1** Closure Trust Fund 11
- **I.5.2** Surety Bond 11
- **I.5.3** Closure Letter of Credit 11
- **I.5.4** Closure Insurance 11
- **I.5.5** Financial Test and Corporate Guarantee for Closure 11
- **I.5.6** Use of Multiple Financial Mechanisms 11
- **I.5.7** Use of Multiple Financial Mechanisms for Multiple Facilities 11

I.6 Post-Closure Cost Estimate [40 CFR 270.14(b)(16); 264.144] 11

I.7 Financial Assurance Mechanism for Post-Closure Care [40 CFR 270.14(b)(16); 264.145; 264.151] 12

I.8 Liability Requirements [40 CFR 270.14(b)(17); 264.147] 12
- **I.8.1** Coverage for Sudden Accidental Occurrences 12
- **I.8.2** Coverage for Non-Sudden Accidental Occurrences 12
- **I.8.3** Requests for Variance 12

I.9 Use of State-Required Mechanisms [40 CFR 270.14(b)(18)] 12

Section J - Solid Waste Management Units **1**

J.1 Characterization of SWMUs [40 CFR 270.14(d)(1)] 1

J.2 Releases [40 CFR 270.14(d)(2)] 1

Section K - Other Federal Laws **1**

K.1 Other Federal Laws [40 CFR 270.14(b)(20) and 270.3] 1

Section L - Part B Certification [40 CFR 270.11] **1**

Section M - Subpart AA Process Vents **1**

Section N - Subpart BB Equipment Leaks **1**

N.1 Applicability and Definitions [40 CFR 270.14(a); 270.25; 264.1031; 264.1050; and 264.1051] 1
- **N.1.1** Applicability 1
- **N.1.2** Definition of Equipment 1
- **N.1.3** Equipment in Vacuum Service or Less Than 300 Hours Service 2

N.2 Monitoring [40 CFR 270.25(d); 264.1052; 264.1059; and 264.1063] 2
- **N.2.1** Monthly Monitoring of Leaks 2
- **N.2.2** Visual Inspection of Pump Seal 2
- **N.2.3** Leak Detection 2
- **N.2.4** Leak Repair as Soon as Practicable 2
- **N.2.5** Specific Exemptions 3

N.3 Barriers [40 CFR 270.14(a); 270.25(d); 264.1053; and 264.1059] 3

N.4 Pressure Relief Devices [40 CFR 270.25(d) and 264.1054] 3

N.5 Sampling [40 CFR 270.25(d); 264.1055; and 264.1060] 4
- **N.5.1** Sampling Connecting Systems 4
- **N.5.2** Sampling System Exemptions 4

N.6 Valves [40 CFR 270.25(d) and 264.1056] 4
- **N.6.1** Open-Ended Valves or Lines 4
- **N.6.2** Second Valve 4

N.7 Monitoring Schedules [40 CFR 270.25(d); 264.1057; 264.1058; and 264.1061-1063] 5

N.8 Leak Detection [40 CFR 270.25(d); 264.1058; 264.1059; and 264.1063] 5
- **N.8.1** Monitoring 5
- **N.8.2** Leak Detection 6
- **N.8.3** Leak Repair as Soon as Practicable 6
- **N.8.4** Inaccessible or Ceramic Lined Connections 7

N.9 Delay of Repairs [40 CFR 270.25(d) and 264.1059] 7

N.10 Closed Vent Systems [40 CFR 270.25(e); 264.1033; and 264.1060] 8

N.11 Alternative Monitoring Programs [40 CFR 270.25(e) and 264.1061] 8

N.12 Alternative Work Practices [40 CFR 270.25(e) and 264.1062] 8

N.13 Recordkeeping Requirements [40 CFR 270.25(a)-(c); 264.1064; and 264.1065] 8
N.13.1 Semiannual Report 8
N.13.2 Implementation Schedule 9
N.13.3 Performance Test Plan 9

Section O - Subpart CC Air Emission Standards 1

O.1 Applicability and Definitions [40 CFR 270.14(a); 270.27; and 264.1080(a)-(d)] 1

O.2 List of Exempt Units [40 CFR 270.14(a); 270.27; and 264.1082(c)] 2
O.2.1 Hazardous Waste with Volatile Organic Concentration of Less Than 500 ppmw 2
O.2.2 Reduced by Organic Destruction or Removal Process 2
O.2.3 Tanks used for Biological Treatment 2
O.2.4 Hazardous Waste meets Applicable Organic Concentration Limits 2
O.2.5 Tank within Enclosure Vented to Control Device 2

O.3 Waste Determination Procedures [40 CFR 270.14(a); 270.27; 264.1083 and 264.1084] 3

O.4 Tank Controls [40 CFR 270.14(a); 270.27; and 264.1084(b)(1),(2)] 3

O.5 Tank Conditions [40 CFR 270.14(a); 270.27; and 264.1084(b)(1)] 3
O.5.1 Conditions for Hazardous Waste 3
O.5.2 Maximum Organic Vapor Pressure Determination 3
O.5.3 Tank Level 2 - Pressure Tank 4
O.5.4 Tank Level 2 - Tank Located inside an Enclosure 4
O.5.5 Tank Level 1 4
O.5.6 Tank Level 2 6

O.6 Tank Covers [40 CFR 270.14(a); 270.27; and 264.1085(b),(d)] 6

O.7 Tank Venting [40 CFR 270.14(a); 270.27; and 264.1085(c)(1)] 6

O.8 Level 1 Standards [40 CFR 270.14(a); 270.27; and 264.1086(b)(1)] 6

O.9 Containers [40 CFR 270.27(a)(2)] 6

O.10 Container Covers and Closure Devices [40 CFR 270.14(a); 270.27; and 264.1086(c)(3),(4)] 6

O.11 Closed Vent Systems [40 CFR 270.14(a); 270.27; and 264.1087(a)] 7
O.11.1 Standards that Apply 7
O.11.2 Closed Vent System Requirements 7

O.12 Control Devices [40 CFR 270.27(a)(5) and 264.1087(c)(1)] 8
O.12.1 Control Devices Required 8
O.12.2 Closed Vent System and Control Device Operating Requirements 9
O.12.3 Carbon Adsorption Systems 9
O.12.4 Control Device Operation and Maintenance of Other Control Devices 9
O.12.5 Control Device Performance Requirements 9
O.12.6 Performance Test 10
O.12.7 Inspection and Monitoring of Control Device 10

O.13 Inspections [40 CFR 270.27 and 264.1088] 10

O.14 Recordkeeping Requirements [40 CFR 270.27; and 264.1089] 11
O.14.1 Reporting Requirements 11
O.14.2 Emission Control Plan 12
O.14.3 Subpart CC Implementation Plan 12

List of Attachments

Attachment D-1 Tank Certification Report

Attachment G-1 Environmental Response Team Organization

Attachment I-1 Financial Assurance Letter of Credit

Attachment J-1 GEI Report Dated November 6, 2006

Attachment J-2 GEI Submittal Dated August 16, 2005

Attachment K-1 Correspondence from the Massachusetts Division of Fisheries and Wildlife

Attachment N-1 Example Recordkeeping Forms and Leak Detection Monitoring Log

List of Tables

Table C-1 Representative Analytical Data for Polyester Distillate Waste Stream 10
Table C-2 Major Constituents Typically Expected in Polyester Distillate 11
Table C-3 Expected Composition of Vent Gas Stream 12
Table F-1 BIF Non-Regulatory Shutdown Limits 11
Table G-1 Incident Commander Contact Information 15
Table G-2 Internal Notification Procedures 16
Table G-3 Spill Response Equipment 17
Table G-4 Evacuation Procedures 18
Table G-5 Evacuation Meeting Areas 19
Table I-1 Closure Schedule 13
Table I-2 Closure Cost Estimate – December 2006 14
Table N-1 Monitoring Schedule 10
Table O-1 Tanks Subject to Subpart CC Controls 13

List of Figures

Figure B-1 Site Topographic Map 4
Figure B-2 Surrounding Land Use Map 5
Figure B-3 Site Drainage Plan 6
Figure B-4 Site Plan – Distillate Storage 7
Figure B-5 Wind Rose 8
Figure B-6 100-Year Floodplain Map 9
Figure D-1 Waste Flow Diagram 10
Figure D-2 Process Flow Diagram 11
Figure D-3 Detailed Process and Instrumentation Diagram 12
Figure D-4 Building 27 Plan 13
Figure D-5 Distillate Storage and Transfer Diagram 14
Figure D-6 Burner System Diagram 15
Figure D-7 Vapor Tie-In Elevation and Plan Views 16
Figure F-1 BIF Daily Inspection Form 9
Figure F-2 CEM Daily Inspection Form 10
Figure F-3 Fire Protection Services 12
Figure G-1 Hazardous Waste Activity 20
Figure G-2 Building Exits and Evacuation Areas 21
Figure G-3 Evacuation Routes 22

Acronyms / Definitions

AFFF Aqueous Film-Forming Foams
ASME American Society of Mechanical Engineers
ASTM American Society of Testing and Materials
AWFCO Automatic Waste Feed Cutoff (System)
BIF Boiler and Industrial Furnace
BDAT Best Demonstrated Available Technology
CEMS Continuous Emission Monitoring System
CGA Cylinder Gas Audit
CO Carbon Monoxide
CO_2 Carbon Dioxide
CP Contingency Plan
CVAAS Cold Vapor Atomic Absorption Spectroscopy
DEP Department of Environmental Protection (Massachusetts)
DOT Department of Transportation (U.S.)
EPA Environmental Protection Agency (U.S.)
ERT Environmental Response Team
FEMA Federal Emergency Management Agency
HAPs Hazardous Air Pollutants
HOC Halogenated Organic Compounds
HRA Hourly Rolling Average
IC Incident Commander
ICP Integrated Contingency Plan
ICP-MS Inductively Coupled Plasma – Mass Spectroscopy
ICS Incident Command System
LDR Land Disposal Restrictions
MCP Massachusetts Contingency Plan
MSDS Material Safety Data Sheet
NESHAPs National Emission Standards for Hazardous Air Pollutants
NHESP Natural Heritage & Endangered Species Program
NIIMS National Interagency Incident Management System
NPDES National Pollutant Discharge Elimination System
OSHA Occupational Safety and Health Administration
PCBs Polychlorinated Biphenyls
P&ID Process and Instrumentation Diagram
PID Photoionization Detector
PLC Programmable Logic Controller

PPE Personal Protective Equipment

RATA Relative Accuracy Test Audit

RCRA Resource Conservation and Recovery Act

RMS Response Management System

RQ Reportable Quantity

SCBA Self-Contained Breathing Apparatus

SPCC Spill Prevention Control & Countermeasures

SWMU Solid Waste Management Unit

TOC Total Organic Carbon

VOA Volatile Organic Analysis

Section A - Part A General Information Requirements

The original Part A application for the Bostik facility was submitted in July 1995. This section includes an updated and revised Part A submittal which represents several changes to facility operations as well as an estimated quantity of generated hazardous waste based on levels from 2005. Brief summaries of pertinent information as delineated in the Federal RCRA Permit Checklist are also presented below.

A.1 RCRA Activities Conducted [40 CFR 270.13(a),(m)]

Bostik, Inc. stores hazardous waste in tanks and burns the waste onsite in a polyester burner unit that is subject to the BIF regulations.

A.2 Facility Location [40 CFR 270.13(b)(1)]

The facility is located in Middleton, Massachusetts (Essex County).

A.3 Industrial Classification [40 CFR 270.13(c)]

The facility produces adhesives and resins and falls under the North American Industry Classification System code of 325520.

A.4 Ownership Status [40 CFR 270.13(d),(e)]

The facility is privately owned by Bostik, Inc. based in Wauwatosa, Wisconsin.

A.5 Facility Status [40 CFR 270.13(f),(g)]

The Bostik manufacturing plant is an existing facility that has been in existence since July 1, 1981. Under RCRA, the facility is currently operating as an interim status facility.

A.6 Hazardous Waste Processes [40 CFR 270.13(i)]

The facility stores waste in one 10,000-gallon tank and two, 8,800-gallon tanks that are the subject of this permit application. Waste is also stored in a < 90-day 950 gallon tank that is not covered by this permit application. The waste generated onsite is burned in an industrial furnace rated at 7.5×10^6 Btu/hr.

A.7 Hazardous Waste Specifications [40 CFR 270.13(j)]

The primary designation for the waste material is D001 (hazardous due to ignitability).

A.8 Listing of Other Permits [40 CFR 270.13(k)]

Other environmental permits are listed on page 1A of 6 of the permit information form.

MAIL THE COMPLETED FORM TO: The Appropriate EPA Regional or State Office.	United States Environmental Protection Agency **RCRA SUBTITLE C SITE IDENTIFICATION FORM**	
1. Reason for Submittal (See instructions on page 25) **CHECK CORRECT BOX(ES)**	Reason For Submittal: ☐ To provide initial notification (to obtain an EPA ID Number for hazardous waste, universal waste, or used oil activities). ☐ To provide subsequent notification (to update site identification ☐ As a component of a First RCRA Hazardous Waste Part A Permit Application. ☒ As a component of a Revised RCRA Hazardous Waste Part A Permit Application (Amendment # 1). ☐ As a component of the Hazardous Waste Report.	
2. Site EPA ID Number (See instructions on page 26)	EPA ID Number: MAD 001 039 767	
3. Site Name (See instructions on page 26)	Name: Bostik, Inc.	
4. Site Location Information (See instructions on page 26)	Street Address: 211 Boston Street	
	City, Town, or Village: Middleton	State: MA
	County Name: Essex	Zip Code: 01949-2128
5. Site Land Type (See instructions on page 26)	Site Land Type : ◉ Private ○ County ○ District ○ Federal ○ Indian ○ Municipal ○ State ○ Other	
6. North American Industry Classification System (NAICS) Code(s) for the Site (See instructions on page 26)	A. 325520	B.
	C.	D.
7. Site Mailing Address (See instructions on page 27) ○ Same as location address	Street or P. O. Box: 211 Boston Street	
	City, Town, or Village: Middleton	
	State: MA	
	Country: U.S.	Zip Code: 01949-2128
8. Site Contact Person (See instructions on page 27)	First Name: Daniel MI: F.	Last Name: Welch
	Phone Number: (978) 750-7402	Phone Number Extension: NA
9. Legal Owner and Operator of the Site (See instructions on pages 27 and 28)	A. Name of Site's Legal Owner: Bostik, Inc.	Date Became Owner (mm/dd/yyyy): 07/01/1981
	Owner Type : ◉ Private ○ County ○ District ○ Federal ○ Indian ○ Municipal ○ State ○ Other	
	B. Name of Site's Operator: Bostik, Inc.	Date Became Operator (mm/dd/yyyy): 07/01/1981
	Operator Type : ◉ Private ○ County ○ District ○ Federal ○ Indian ○ Municipal ○ State ○ Other	

EPA ID No.

10. Type of Regulated Waste Activity (Mark 'X' in the appropriate boxes. See instructions on pages 28 to 32)

A. Hazardous Waste Activities

1. Generator of Hazardous Waste
(choose only one of the following three categories)

- ◉ a. LQG: Greater than 1,000 kg/mo (2,200 lbs./mo.) of non-acute hazardous waste; or
- ○ b. SQG: 100 to 1,000 kg/mo (220 - 2,200 lbs./mo.) of non-acute hazardous waste; or
- ○ c. CESQG: Less than 100 kg/mo (220 lbs./mo.) of non-acute hazardous waste

In addition, indicate other generator activities (check all that apply)

- ☐ d. United States Importer of Hazardous Waste
- ☐ e. Mixed Waste (hazardous and radioactive) Generator

For Items 2 through 6, check all that apply:

- ☐ **2. Transporter of Hazardous Waste**
- ☒ **3. Treater, Storer, or Disposer of Hazardous Waste (at your site)** Note: A hazardous waste permit is required for this activity.
- ☐ **4. Recycler of Hazardous Waste (at your site)** Note: A hazardous waste permit may be required for this activity.
- **5. Exempt Boiler and/or Industrial Furnace**
  - ☐ a. Small Quantity On-site Burner Exemption
  - ☐ b. Smelting, Melting, and Refining Furnace Exemption
- ☐ **6. Underground Injection Control**

B. Universal Waste Activities

1. Large Quantity Handler of Universal Waste (accumulate 5,000 kg or more) [refer to your State regulations to determine what is regulated]. Indicate types of universal waste generated and/or accumulated at your site. (check all boxes that apply):

	Generated	Accumulated
a. Batteries	☐	☐
b. Pesticides	☐	☐
c. Thermostats	☐	☐
d. Lamps	☐	☐
e. Other (specify)	☐	☐
f. Other (specify)	☐	☐
g. Other (specify)	☐	☐

☐ **2. Destination Facility for Universal Waste**
Note: A hazardous waste permit may be required for this activity.

C. Used Oil Activities

1. Used Oil Transporter - Indicate Type(s) of Activity(ies)
- ☐ a. Transporter
- ☐ b. Transfer Facility

2. Used Oil Processor and/or Re-refiner - Indicate Type(s) of Activity(ies)
- ☐ a. Processor
- ☐ b. Re-refiner

☐ **3. Off-Specification Used Oil Burner**

4. Used Oil Fuel Marketer - Indicate Type(s) of Activity(ies)
- ☐ a. Marketer Who Directs Shipment of Off-Specification Used Oil to Off-Specification Used Oil Burner
- ☐ b. Marketer Who First Claims the Used Oil Meets the Specifications

11. Description of Hazardous Wastes (See instructions on page 33)

A. Waste Codes for Federally Regulated Hazardous Wastes. Please list the waste codes of the Federal hazardous wastes handled at your site. List them in the order they are presented in the regulations (e.g., D001, D003, F007, U112). Use an additional page if more spaces are needed.

D001	D018	D035	--	--	--	--
--	--	--	--	--	--	--
--	--	--	--	--	--	--
--	--	--	--	--	--	--
--	--	--	--	--	--	--
--	--	--	--	--	--	--
--	--	--	--	--	--	--

EPA ID No.

B. Waste Codes for State-Regulated (i.e., non-Federal) Hazardous Wastes. Please list the waste codes of the State-regulated hazardous wastes handled at your site. List them in the order they are presented in the regulations. Use an additional page if more spaces are needed for waste codes.

12. Comments (See instructions on page 33)

13. Certification. I certify under penalty of law that this document and all attachments were prepared under my direction or supervision in accordance with a system designed to assure that qualified personnel properly gather and evaluate the information submitted. Based on my inquiry of the person or persons who manage the system, or those persons directly responsible for gathering the information, the information submitted is, to the best of my knowledge and belief, true, accurate, and complete. I am aware that there are significant penalties for submitting false information, including the possibility of fine and imprisonment for knowing violations. **(See instructions on page 33)**

Signature of owner, operator, or an authorized representative	Name and Official Title (type or print)	Date Signed (mm/dd/yyyy)
	Daniel F. Welch	12/08/2006
	Health Safety Environment & Quality Manager	

United States Environmental Protection Agency

HAZARDOUS WASTE PERMIT INFORMATION FORM

1. Facility Permit Contact (See instructions on page 35)	First Name: Daniel	MI: F.	Last Name: Welch
	Phone Number: (978) 750-7402		Phone Number Extension: NA
2. Facility Permit Contact Mailing Address (See instructions on page 35)	Street or P.O. Box: 211 Boston Street		
	City, Town, or Village: Middleton		
	State: Massachusetts		
	Country U.S.		Zip Code: 01949-2128
3. Legal Owner Mailing Address and Telephone Number (See instructions on page 36) O Same as Facility Addr.	Street or P.O. Box: 11320 Watertown Plank Road		
	City, Town, or Village: Wauwatosa		
	State: Wisconsin		
	Country: U.S.	Zip Code: 53226-3434	Phone Number: (414) 774-2250
4. Operator Mailing Address and Telephone Number (See instructions on page 36) O Same as Facility Addr. O Same as Owner Addr.	Street or P.O. Box: 211 Boston Street		
	City, Town, or Village: Middleton		
	State: Massachusetts		
	Country: U.S.	Zip Code: 01949-2128	Phone Number: (978) 750-7402
5. Facility Existence Date (See instructions on page 36)	Facility Existence Date (mm/dd/yyyy): 07/01/1981		

6. Other Environmental Permits (See instructions on page 36)

A. Permit Type *(Enter code)*	B. Permit Number	C. Description
--		
--		See Attached Listing of Permits - pg 1A of 6
--		
--		
--		
--		
--		
--		

7. Nature of Business (Provide a brief description; see instructions on page 37)

Manufactures industrial grade adhesives: polyester & polyamide resins, polyurethanes, solvent -based liquid adhesives & web adhesive.

6. Other Environmental Permits (See instructions on page 36)

A. Permit Type (Enter code)	B. Permit Number	C. Description
R	MAD 001 039 767	Large Quantity Generator
E	81-COM-010	Air Quality - Struthers Wells Inductrial Boiler
E	83-COM-024	Air Quality - Main Boilers
E	89-IND-042	Air Quality - Polyester Reactor Train
E	89-IND-150	Air Quality - Heat Cleaning Oven
E	97-IND-055	Air Quality - Enclosed Flare for Control of Odor
E	98-COM-013	Air Quality - Boilers
E	98-IND-008	Air Quality - Polyester Reactor Train
E	41026	Water Quality - SESD Sewer Discharge Permit
E	MAR05C637	Water Quality - Multi-sector General Stormwater Permit

8. Process Codes and Design Capacities (See instructions on page 37)

A. PROCESS CODE - *Enter the code from the list of process codes below that best describes each process to be used at the facility. Thirteen lines are provided for entering codes. If more lines are needed, attach a separate sheet of paper with the additional information. For "other" processes (i.e., D99, S99, T04 and X99), describe the process (including its design capacity) in the space provided in Item 9.*

B. PROCESS DESIGN CAPACITY- *For each code entered in column A, enter the capacity of the process.*

1. **AMOUNT** - *Enter the amount. In a case where design capacity is not applicable (such as in a closure/post-closure or enforcement action) enter the total amount of waste for that process.*
2. **UNIT OF MEASURE** - *For each amount entered in column B(1), enter the code in column B(2) from the list of unit of measure codes below that describes the unit of measure used. Select only from the units of measure in this list.*

C. PROCESS TOTAL NUMBER OF UNITS - *Enter the total number of units for each corresponding process code.*

PROCESS CODE	PROCESS	APPROPRIATE UNITS OF MEASURE FOR PROCESS DESIGN CAPACITY
	Disposal :	
☐ D79	Underground Injection Well Disposal	Gallons; Liters; Gallons Per Day; or Liters Per Day
☐ D80	Landfill	Acre-feet; Hectare-meter; Acres; Cubic Meters; Hectares; Cubic Yards
☐ D81	Land Treatment	Acres or Hectares
☐ D82	Ocean Disposal	Gallons Per Day or Liters Per Day
☐ D83	Surface Impoundment Disposal	Gallons; Liters; Cubic Meters; or Cubic Yards
☐ D99	Other Disposal	Any Unit of Measure Listed Below
	Storage :	
☐ S01	Container	Gallons; Liters; Cubic Meters; or Cubic Yards
☐ S02	Tank Storage	Gallons; Liters; Cubic Meters; or Cubic Yards
☐ S03	Waste Pile	Cubic Yards or Cubic Meters
☐ S04	Surface Impoundment Storage	Gallons; Liters; Cubic Meters; or Cubic Yards
☐ S05	Drip Pad	Gallons; Liters; Acres; Cubic Meters; Hectares; or Cubic Yards
☐ S06	Containment Building Storage	Cubic Yards or Cubic Meters
☐ S99	Other Storage	Any Unit of Measure Listed Below
	Treatment :	
☐ T01	Tank Treatment	Gallons Per Day; Liters Per Day; Short Tons Per Hour; Gallons Per Hour; Liters Per Hour; Pounds Per Hour; Short Tons Per Day; Kilograms Per Hour; Metric Tons Per Day; or Metric Tons Per Hour
☐ T02	Surface Impoundment Treatment	Gallons Per Day; Liters Per Day; Short Tons Per Hour; Gallons Per Hour; Liters Per Hour; Pounds Per Hour; Short Tons per Day; Kilograms Per Hour; Metric Tons Per Day; or Metric Tons Per Hour
☐ T03	Incinerator	Short Tons Per Hour; Metric Tons Per Hour; Gallons Per Hour; Liters Per Hour; Btu Per Hour; Pounds Per Hour; Short Tons Per Day; Kilograms Per Hour; Gallons Per Day; Liters Per Day; Metric Tons Per Hour; or Million Btu Per Hour
☐ T04	Other Treatment	Gallons Per Day; Liters Per Day; Pounds Per Hour; Short Tons Per Hour; Kilograms Per Hour; Metric Tons Per Day; Metric Tons Per Hour; Short Tons Per Day; Btu Per Hour; Gallons Per Day; Liters Per Hour; or Million Btu Per Hour
☐ T80	Boiler	Gallons; Liters; Gallons Per Hour; Liters Per Hour; Btu Per Hour; or Million Btu Per Hour
☐ T81	Cement Kiln	Gallons Per Day; Liters Per Day; Pounds Per Hour; Short Tons Per Hour; Kilograms Per Hour; Metric Tons Per Day; Metric Tons Per Hour; Short Tons Per Day; Btu Per Hour; Liters Per Hour; Kilograms Per Hour; or Million Btu Per Hour
☐ T82	Lime Kiln	
☐ T83	Aggregate Kiln	
☐ T84	Phosphate Kiln	
☐ T85	Coke Oven	
☐ T86	Blast Furnace	
☐ T87	Smelting, Melting, or Refining Furnace	Gallons Per Day; Liters Per Day; Pounds Per Hour; Short Tons Per Hour; Kilograms Per Hour; Metric Tons Per Day; Metric Tons Per Hour; Short Tons Per Day; Btu Per Hour; Gallons Per Hour; Liters Per Hour; or Million Btu Per Hour
☐ T88	Titanium Dioxide Chloride Oxidation Reactor	
☐ T89	Methane Reforming Furnace	
☐ T90	Pulping Liquor Recovery Furnace	
☐ T91	Combustion Device Used In The Recovery Of Sulfur Values From Spent Sulfuric Acid Halogen Acid Furnaces Other Industrial Furnaces	
☐ T92	Listed In 40 CFR §260.10	
☐ T93		
☐ T94	Containment Building - Treatment	Cubic Yards; Cubic Meters; Short Tons Per Hour; Gallons Per Hour; Liters Per Hour; Btu Per Hour; Pounds Per Hour; Short Tons Per Day; Kilograms Per Hour; Metric Tons Per Day; Gallons Per Day; Liters Per Day; Metric Tons Per Hour; or Million Btu Per Hour
	Miscellaneous (Subpart X) :	
☐ X01	Open Burning/Open Detonation	Any Unit of Measure Listed Below
☐ X02	Mechanical Processing	Short Tons Per Hour; Metric Tons Per Hour; Short Tons Per Day; Metric Tons Per Day; Pounds Per Hour; Kilograms Per Hour; Gallons Per Hour; Liters Per Hour; or Gallons Per Day
☐ X03	Thermal Unit	Gallons Per Day; Liters Per Day; Pounds Per Hour; Short Tons Per Hour; Kilograms Per Hour; Metric Tons Per Day; Metric Tons Per Hour; Short Tons Per Day; Btu Per Hour; or Million Btu Per Hour
☐ X04	Geologic Repository	Cubic Yards; Cubic Meters; Acre-feet; Hectare-meter; Gallons; or Liters
☐ X99	Other Subpart X	Any Unit of Measure Listed Below

UNIT OF MEASURE	UNIT OF MEASURE CODE	UNIT OF MEASURE	UNIT OF MEASURE CODE	UNIT OF MEASURE	UNIT OF MEASURE CODE
Gallons	G	Short Tons Per Hour	D	Cubic Yards	Y
Gallons Per Hour	E	Metric Tons Per Hour	W	Cubic Meters	C
Gallons Per Day	U	Short Tons Per Day	N	Acres	B
Liters	L	Metric Tons Per Day	S	Acre-feet	A
Liters Per Hour	H	Pounds Per Hour	J	Hectares	Q
Liters Per Day	V	Kilograms Per Hour	R	Hectare-meter	F
		Million Btu Per Hour	X	Btu Per Hour	I

8. Process Codes and Design Capacities (*Continued*)

EXAMPLE FOR COMPLETING Item 8 (shown in line number X-1 below): A facility has a storage tank, which can hold 533.788 gallons.

Line Number	A. Process Code (From list above)	B. PROCESS DESIGN CAPACITY (1) Amount (Specify)	B. PROCESS DESIGN CAPACITY (2) Unit of Measure (Enter code)	C. Process Total Number of Units	
X 1	S 0 2	5 3 3 . 7 8 8	G	0 0 1	
1	SO2	8,800	SHORT TONS PER HOUR	002	
2	SO2	10,000	SHORT TONS PER HOUR	001	
3	T93	7,500,000	SHORT TONS PER HOUR	001	
4			SHORT TONS PER HOUR		
5			SHORT TONS PER HOUR		
6			SHORT TONS PER HOUR		
7			SHORT TONS PER HOUR		
8			SHORT TONS PER HOUR		
9			SHORT TONS PER HOUR		
10			SHORT TONS PER HOUR		
11			SHORT TONS PER HOUR		
12			SHORT TONS PER HOUR		
13			SHORT TONS PER HOUR		

NOTE: If you need to list more than 13 process codes, attach an additional sheet(s) with the information in the same format as above. Number the lines sequentially, taking into account any lines that will be used for "other" processes (i.e., D99, S99, T04 and X99) in Item 9.

9. Other Processes (*See instructions on page 37 and follow instructions from Item 8 for D99, S99, T04 and X99 process codes*)

Line Number (Enter #s in sequence with Item 8)	A. Process Code (From list above)	B. PROCESS DESIGN CAPACITY (1) Amount (Specify)	B. PROCESS DESIGN CAPACITY (2) Unit of Measure (Enter code)	C. Process Total Number of Units	D. Description of Process
X 1	T 0 4	.			In-situ Vitrification
1			SHORT TONS PER HOUR		
2			SHORT TONS PER HOUR		
3			SHORT TONS PER HOUR		
4			SHORT TONS PER HOUR		

10. Description of Hazardous Wastes (See instructions on page 37)

A. **EPA HAZARDOUS WASTE NUMBER** - *Enter the four-digit number from 40 CFR, Part 261 Subpart D of each listed hazardous waste you will handle. For hazardous wastes which are not listed in 40 CFR, Part 261 Subpart D, enter the four-digit number(s) from 40 CFR Part 261, Subpart C that describes the characteristics and/or the toxic contaminants of those hazardous wastes.*

B. **ESTIMATED ANNUAL QUANTITY** *For each listed waste entered in column A, estimate the quantity of that waste that will be handled on an annual basis. For each characteristic or toxic contaminant entered in column A, estimate the total annual quantity of all the non-listed waste(s) that will be handled which possess that characteristic or contaminant.*

C. **UNIT OF MEASURE** - *For each quantity entered in column B, enter the unit of measure code. Units of measure which must be used and the appropriate codes are:*

ENGLISH UNIT OF MEASURE	*CODE*	*METRIC UNIT OF MEASURE*	*CODE*
POUNDS	*P*	*KILOGRAMS*	*K*
TONS	*T*	*METRIC TONS*	*M*

If facility records use any other unit of measure for quantity, the units of measure must be converted into one of the required units of measure, taking into account the appropriate density or specific gravity of the waste.

D. **PROCESSES**

1. **PROCESS CODES:**

For listed hazardous waste: For each listed hazardous waste entered in column A select the code(s) from the list of process codes contained in Items 8A and 9A on page 3 to indicate the waste will be stored, treated, and/or disposed at the facility.

For non-listed hazardous waste: For each characteristic or toxic contaminant entered in column A, select the code(s) from the list of process codes contained in Items 8A and 9A on page 3 to indicate all the processes that will be used to store, treat, and/or dispose of all the non-listed hazardous wastes that possess that characteristic or toxic contaminant.

NOTE: THREE SPACES ARE PROVIDED FOR ENTERING PROCESS CODES. IF MORE ARE NEEDED:

1. *Enter the first two as described above.*
2. *Enter "000" in the extreme right box of Item 10.D(1).*
3. *Use additional sheet, enter line number from previous sheet, and enter additional code(s) in Item 10.E.*

2. **PROCESS DESCRIPTION:** *If a code is not listed for a process that will be used, describe the process in Item 10.D(2) or in Item 10.E(2).*

NOTE: HAZARDOUS WASTES DESCRIBED BY MORE THAN ONE EPA HAZARDOUS WASTE NUMBER - Hazardous wastes that can be described by more than one EPA Hazardous Waste Number shall be described on the form as follows:

1. *Select one of the EPA Hazardous Waste Numbers and enter it in column A. On the same line complete columns B, C and D by estimating the total annual quantity of the waste and describing all the processes to be used to treat, store, and/or dispose of the waste.*
2. *In column A of the next line enter the other EPA Hazardous Waste Number that can be used to describe the waste. In column D(2) on that line enter "included with above" and make no other entries on that line.*
3. *Repeat step 2 for each EPA Hazardous Waste Number that can be used to describe the hazardous waste.*

EXAMPLE FOR COMPLETING Item 10 (shown in line numbers X-1, X-2, X-3, and X-4 below) - A facility will treat and dispose of an estimated 900 pounds per year of chrome shavings from leather tanning and finishing operations. In addition, the facility will treat and dispose of three non-listed wastes. Two wastes are corrosive only and there will be an estimated 200 pounds per year of each waste. The other waste is corrosive and ignitable and there will be an estimated 100 pounds per year of that waste. Treatment will be in an incinerator and disposal will be in a landfill.

Line Number	*A. EPA Hazardous Waste No. (Enter code)*	*B. Estimated Annual Quantity of Waste*	*C. Unit of Measure (Enter code)*	*D. PROCESSES*							
				(1) PROCESS CODES (Enter code)							*(2) PROCESS DESCRIPTION (If a code is not entered in D(1))*
X 1	K 0 5 4	900	P	T	0	3	D	8	0		
X 2	D 0 0 2	400	P	T	0	3	D	8	0		
X 3	D 0 0 1	100	P	T	0	3	D	8	0		
X 4	D 0 0 2										Included With Above

10. Description of Hazardous Wastes (*Continued; use additional sheets as necessary*)

Line Number	A. EPA Hazardous Waste No. (Enter code)	B. Estimated Annual Quantity of Waste	C. Unit of Measure (Enter code)	D. PROCESSES (1) PROCESS CODES (Enter code)			(2) PROCESS DESCRIPTION (If a code is not entered in D(1))
1	D 001	3,452,760	POUNDS	SO2	T93		
2	D 018		--	SO2	T93		Quantity included on Line 1
3	D 035		--	SO2	T93		Quantity included on Line 1
4	--		--				
5	--		--				
6	--		--				
7	--		--				
8	--		--				
9	--		--				
10	--		--				
11	--		--				
12	--		--				
13	--		--				
14	--		--				
15	--		--				
16	--		--				
17	--		--				
18	--		--				
19	--		--				
20	--		--				
21	--		--				
22	--		--				
23	--		--				
24	--		--				
25	--		--				
26	--		--				
27	--		--				
28	--		--				
29	--		--				
30	--		--				
31	--		--				
32	--		--				
33	--		--				

11. Map (See instructions on page 38) See Section B of the Part B Permit Application.

Attach to this application a topographic map, or other equivalent map, of the area extending to at least one mile beyond property boundaries. The map must show the outline of the facility, the location of each of its existing and proposed intake and discharge structures, each of its hazardous waste treatment, storage, or disposal facilities, and each well where it injects fluids underground. Include all springs, rivers and other surface water bodies in this map area. See instructions for precise requirements.

12. Facility Drawing (See instructions on page 39) See Sections B and D of the Part B Permit Application.

All existing facilities must include a scale drawing of the facility (see instructions for more detail).

13. Photographs (See instructions on page 39) See Section B of the Permit Application.

All existing facilities must include photographs (aerial or ground-level) that clearly delineate all existing structures; existing storage, treatment and disposal areas; and sites of future storage, treatment or disposal areas (see instructions for more detail).

14. Comments (See instructions on page 39)

Section B - Facility Description

B.1 General Description [40 CFR 270.14(b)(1)]

Bostik Inc. (Bostik) is located at 211 Boston Street in Middleton, Massachusetts. Bostik is a manufacturer of industrial grade adhesives and sealants. Bostik employs approximately 200 people at this 103 acre site including divisional headquarters administration, research and development, and the manufacturing activities.

The Bostik site is bordered by dense woods to the south and west, the Ipswich River to the north, and Boston Street to the east. The site was originally developed in 1674 by John Phelps and operated as a sawmill. Several other owners operated the sawmill, a fulling mill (for cleaning and finishing wool), and a grist mill into the early 1800s. During the 1800s, the site was used for a paper mill and linseed oil business. For a few years in the early 1900s, the site was used as a leather finishing factory; and in the 1920s, the site became a dyeing establishment. Since 1928, the site has been owned successively by Boston Blacking Co., The B-B Chemical Co., and currently Bostik, Inc.

In the process of manufacturing adhesives, Bostik utilizes many organic chemicals at the facility. Natural gas is fired in one of several boilers for steam generation. Numerous organic solvents are utilized in the production of solvent based liquid adhesives. The larger use solvents are stored in bulk tanks located in an underground vault whereas solvents used in smaller quantities are stored in drums. These solvents are combined with rubber and polyester based polymers in mixing vessels to dissolve the polymer and form a liquid adhesive. This type of manufacturing generally takes place in the Churn Room, Direct Solvation, and Polyurethane departments (Building No's. 24, 9, and 37 respectively).

Another aspect of Bostik's business is the polymerization reactions which occur in the following departments: Polyester (Building No's. 36 and 39), Polyamide (Building No. 1), Polyurethane (Building No. 37), and Direct Solvation (Building No. 9). These processes create solid non-hazardous resins from the polymerization of two relatively non-hazardous raw materials. In the Polyester and Direct Solvation departments, the raw materials that are reacted are diacids and glycols, whereas fatty acids and amines are reacted in Polyamide and isocyanates and amines are reacted in Polyurethane. The majority of these raw materials are powders; however, a few of these materials are room temperature liquids stored in aboveground tanks adjacent to the respective department. All of these tanks are diked to protect against overfilling or leakage.

The polyester polymerization reactions that take place in the Polyester (Building No's. 36 and 39) and Direct Solvation (Building No. 9) departments generate a byproduct known as polyester distillate. This distillate, although primarily water and methanol, is a hazardous waste in terms of ignitability (D001) and the potential for residual concentrations of benzene and methyl ethyl ketone (MEK) that would require listing waste codes D018 and D035. The distillate generated in Buildings 36 and 39 is accumulated in two (2) 8,800 aboveground storage tanks adjacent to Building 39. These tanks are identified as T-1 and T-2. The distillate generated in the Direct Solvation department is accumulated

in a 10,000 gallon aboveground storage tank adjacent to Building 9. This tank is identified as T-9. The distillate in T-9 is then periodically pumped to T-1 and T-2. The distillate from T-1 and T-2 is then pumped to the Struthers-Wells Industrial Boiler adjacent to Building 36 where it is subsequently co-fired with natural gas. The Direct Solvation Tank (T-9), the two Polyester Tanks (T-1 and T-2), and the industrial boiler are the subject of this RCRA Part B permit application.

B.2 Topographic Map [40 CFR 270.14]

Figure B-1 shows a topographic map including the Bostik facility boundaries and a distance of about 11,000 feet around the facility at a scale of 1 inch equal to about 2,500 feet. **Figure B-2** is a topographic / satellite view which depicts the surrounding land use in the vicinity of the facility. **Figure B-3** shows a detailed site drainage plan indicating surface water flow in the vicinity of and from each operational unit (i.e., the Direct Solvation Tank (Building 9); Tanks T-1 and T-2 (Building 27); and the Industrial Boiler (Building 36)). The site plan indicates the location of perimeter fencing, security gates, buildings, structures, surface water, withdrawal wells, sewers (storm catch basins, NPDES outfalls, and drain manholes), fire hydrants, and hazardous waste management units. See Section J of this Part B permit application for a description of Solid Waste Management Units (SWMUs) and an investigation site plan. **Figure B-4** provides a detailed site plan showing all distillate storage locations. **Figure B-5** shows the wind rose for the area representative of the Bostik facility.

B.3 Facility Location Information [40 CFR 270.14(b)(11); 264.18]

The Bostik facility is located in the Town of Middleton, Essex County, Massachusetts. This district is not listed in 40 CFR 264 Appendix VI; therefore, the requirements of this section pertaining to seismic considerations are not applicable.

Figure B-6 shows the FEMA Flood Insurance Rate Map including the Bostik facility. The flood map indicates that the hazardous waste management units are within Zone C (i.e., outside the 100-year flood area with minimum flood hazard). This map was last updated in June 2004.

B.4 Traffic Patterns [40 CFR 270.14(b)(10)]

Employee Vehicles generally enter and exit the Bostik facility through the plant entrance by Building No. 3 (boiler room). All truck traffic enters through the trucking corral entrance between Buildings 3 and 26 and exits via the plant entrance by Building 3. Any on-site hazardous waste traffic will be conducted on asphalt paved roadways or parking lots with adequate load-bearing capacities. Speed limit signs are posted throughout the facility at 15 mph and "STOP" signs are posted at roadway intersections. Speed bumps are also located throughout the facility to reduce traffic speed in pedestrian crossing areas.

When trucks and trailers are unattended, chock blocks will be placed behind the wheels to prevent movement. When trailers are being loaded/unloaded without the truck cab attached, stabilizing jacks will be put in place.

The primary hazardous waste traffic subject to this permit application will be limited as follows:

- Hazardous waste will be hard-piped from the 10,000 gallon Direct Solvation Tank (T-9) into the two (2) 8,800 Polyester Tanks (T-1 and T-2);
- Hazardous waste from storage tanks T-1 and T-2 will then be hard-piped to the industrial boiler adjacent to Building 36.

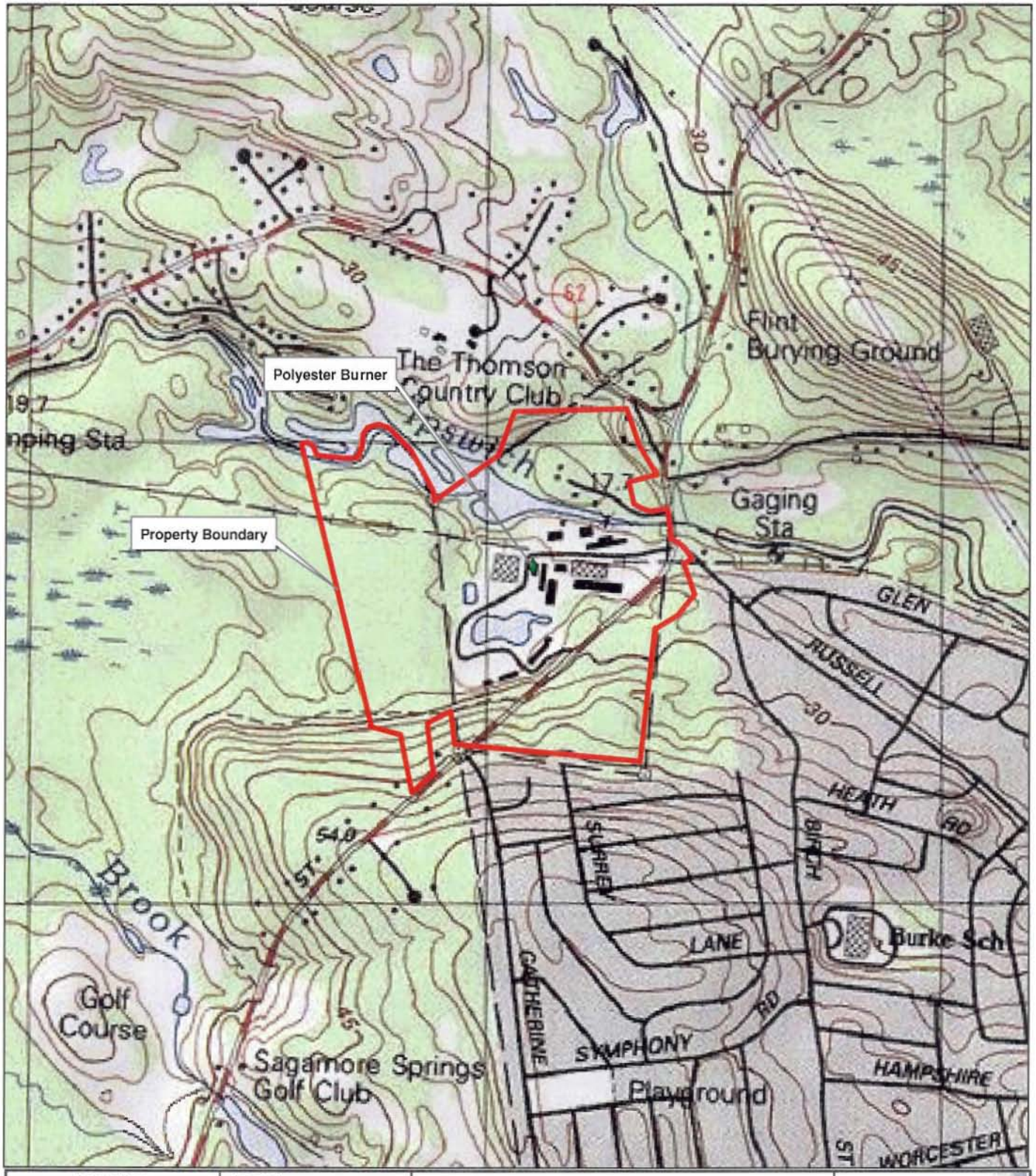

Locus Map

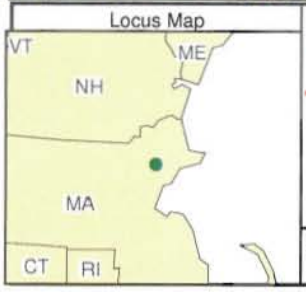

Legend

- Polyester Burner
- Property Boundary

N W E S

Figure B-1
Site Location, Property Line, and Boiler Location.
Bostik, Inc., Middleton, MA

Bostik
The Adhesive Company

ENSR | AECOM

Scale 0 0.1 0.2 0.4 0.6 0.8 1 Kilometers

Locus Map

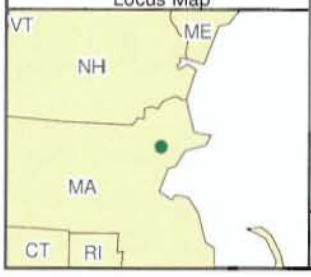

Legend

- Site Location
- 3-KM Radius Around Site

N
W E
S

Figure B-2
3-km Land Use Area
Around Bostik, Inc.
Middleton, MA

Bostik
The Adhesive Company

ENSR | AECOM

Scale 0 0.25 0.5 1 1.5 2 2.5 3 Kilometers

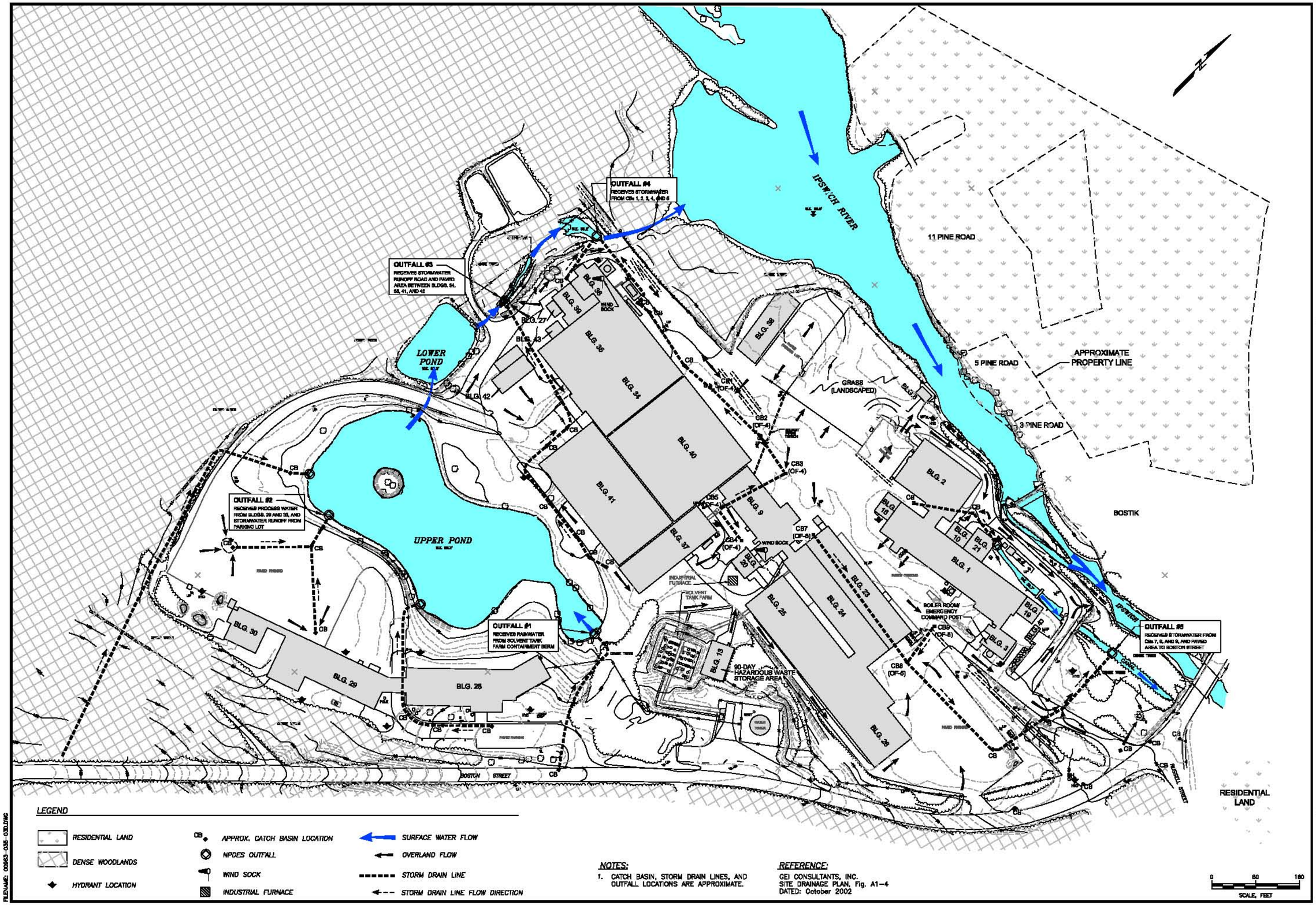

LEGEND

- RESIDENTIAL LAND
- DENSE WOODLANDS
- HYDRANT LOCATION
- CB APPROX. CATCH BASIN LOCATION
- NPDES OUTFALL
- WIND SOCK
- INDUSTRIAL FURNACE
- SURFACE WATER FLOW
- OVERLAND FLOW
- STORM DRAIN LINE
- STORM DRAIN LINE FLOW DIRECTION

NOTES:

1. CATCH BASIN, STORM DRAIN LINES, AND OUTFALL LOCATIONS ARE APPROXIMATE.

REFERENCE:

GEI CONSULTANTS, INC.
SITE DRAINAGE PLAN, Fig. A1-4
DATED: October 2002

FILEN/AME: 00963-035-030.DWG

REVISIONS		
NO.:	DESCRIPTION:	DATE:	BY:

DESIGNED BY: X
DRAWN BY: K.P.B.
CHECKED BY: D.R.
APPROVED BY: X

ENSR | AECOM
ENSR CORPORATION
2 TECHNOLOGY PARK DRIVE
WESTFORD, MASSACHUSETTS 01886
PHONE: (978) 589-3000
FAX: (978) 589-3100
WEB: HTTP://WWW.ENSR.AECOM.COM

SITE DRAINAGE PLAN
BOSTIK, INC.
211 BOSTON STREET
MIDDLETON, MASSACHUSETTS

SCALE:	DATE:	PROJECT NUMBER:
1"=160'	11/06	00963-035

FIGURE NUMBER: B-3

SHEET NUMBER: X

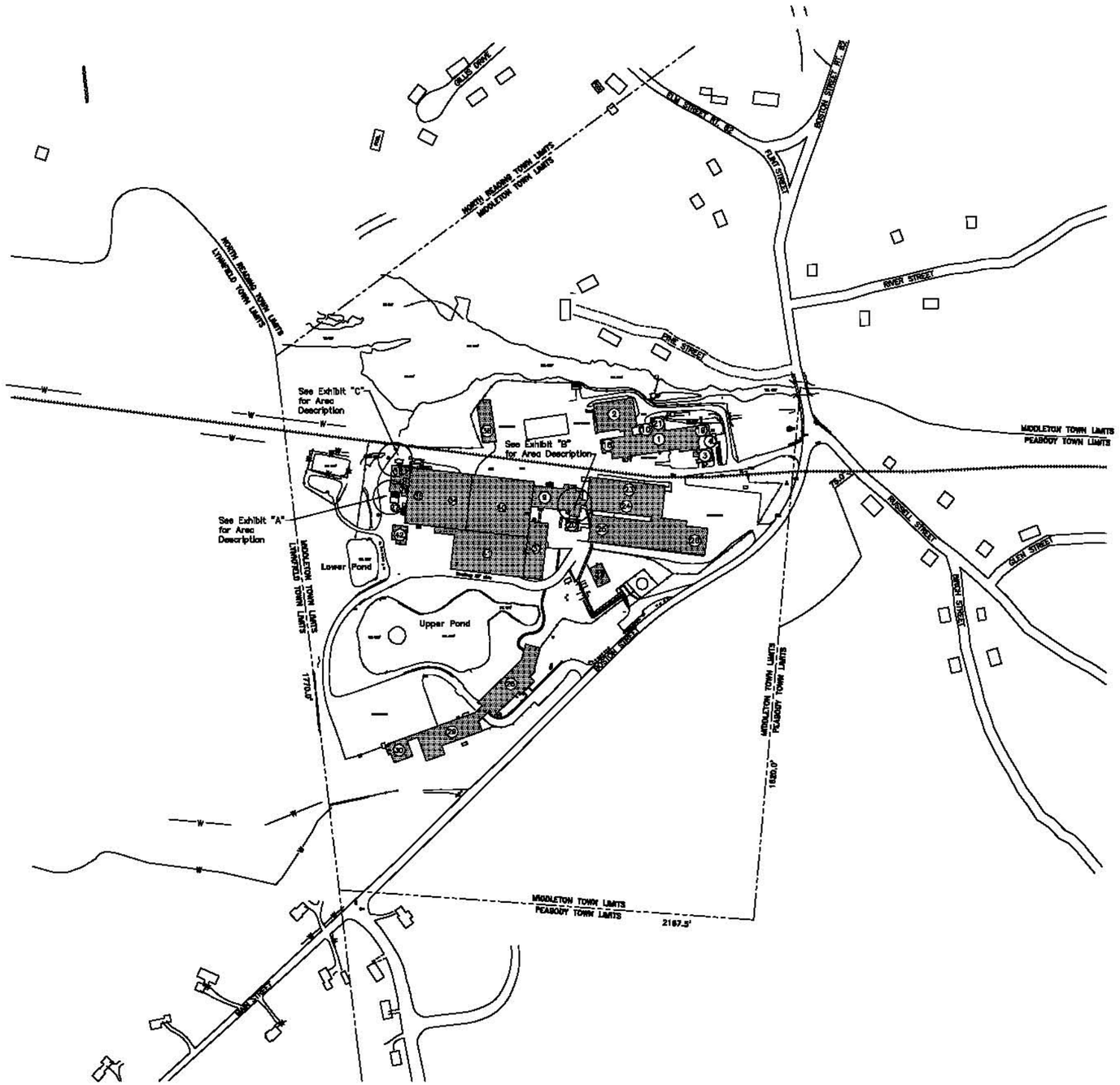

Exhibit "C"

Natural gas co-fired with Distillate

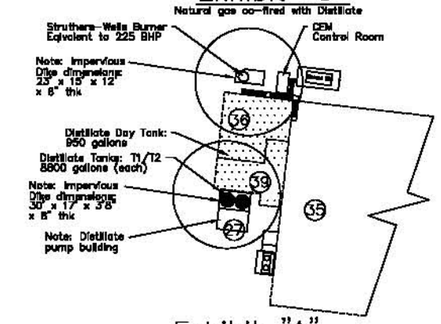

Exhibit "A"

Storage Tanks & Pump Bldg.

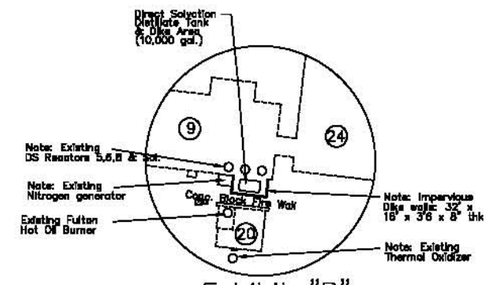

Exhibit "B"

Bldg. #9 Distillate Storage

LEGEND

- BUILDING NUMBERS
- CHAIN LINK FENCE
- WETLANDS
- STONE WALL
- RAILROAD
- CONTOUR
- BUILDING
- TREE LINE
- WALL

NOTE

1. PLAN TAKEN FROM COL-EAST: BOSTIK SITE PLAN DATED JANUARY, 1991, WETLAND CONSERVATION MAP OF NORTH READING, TOPOGRAPHIC MAPS OF LYNNFIELD, MA NUMBERS 4, 8 AND 9 DATED APRIL 1988 AND USGS 7.5X15 MINUTE MAP OF READING, MA DATED 1987.
2. THE REMAINDER OF THE HOMES ON BIRCH AND RUSSELL STREETS WERE TOO DENSE TO BE DEPICTED.

REFERENCE:

BOSTIK, INC.
SITE PLAN – DISTILLATE STORAGE, DWG. NO. 10082006
DATED: 10/02/2006

0 200 400
SCALE, FEET

REVISIONS			
NO.:	DESCRIPTION:	DATE:	BY:

DESIGNED BY:	DRAWN BY:	CHECKED BY:	APPROVED BY:
X	K.P.B.	D.R.	X

ENSR | AECOM

ENSR CORPORATION
2 TECHNOLOGY PARK DRIVE
WESTFORD, MASSACHUSETTS 01886
PHONE: (978) 589-3000
FAX: (978) 589-3100
WEB: HTTP://WWW.ENSR.AECOM.COM

SITE PLAN – DISTILLATE STORAGE
BOSTIK, INC.
211 BOSTON STREET
MIDDLETON, MASSACHUSETTS

SCALE:	DATE:	PROJECT NUMBER:
1"=400'	11/06	00963-035

FIGURE NUMBER:

B-4

SHEET NUMBER:

X

FILENAME: 00963-035-04LDWG

WIND ROSE PLOT:

Figure B-5: Wind Rose for Study Area, Bostik, Inc.
Logan International Airport Meteorological Data (2000-2004)

DISPLAY:

Wind Speed
Direction (blowing from)

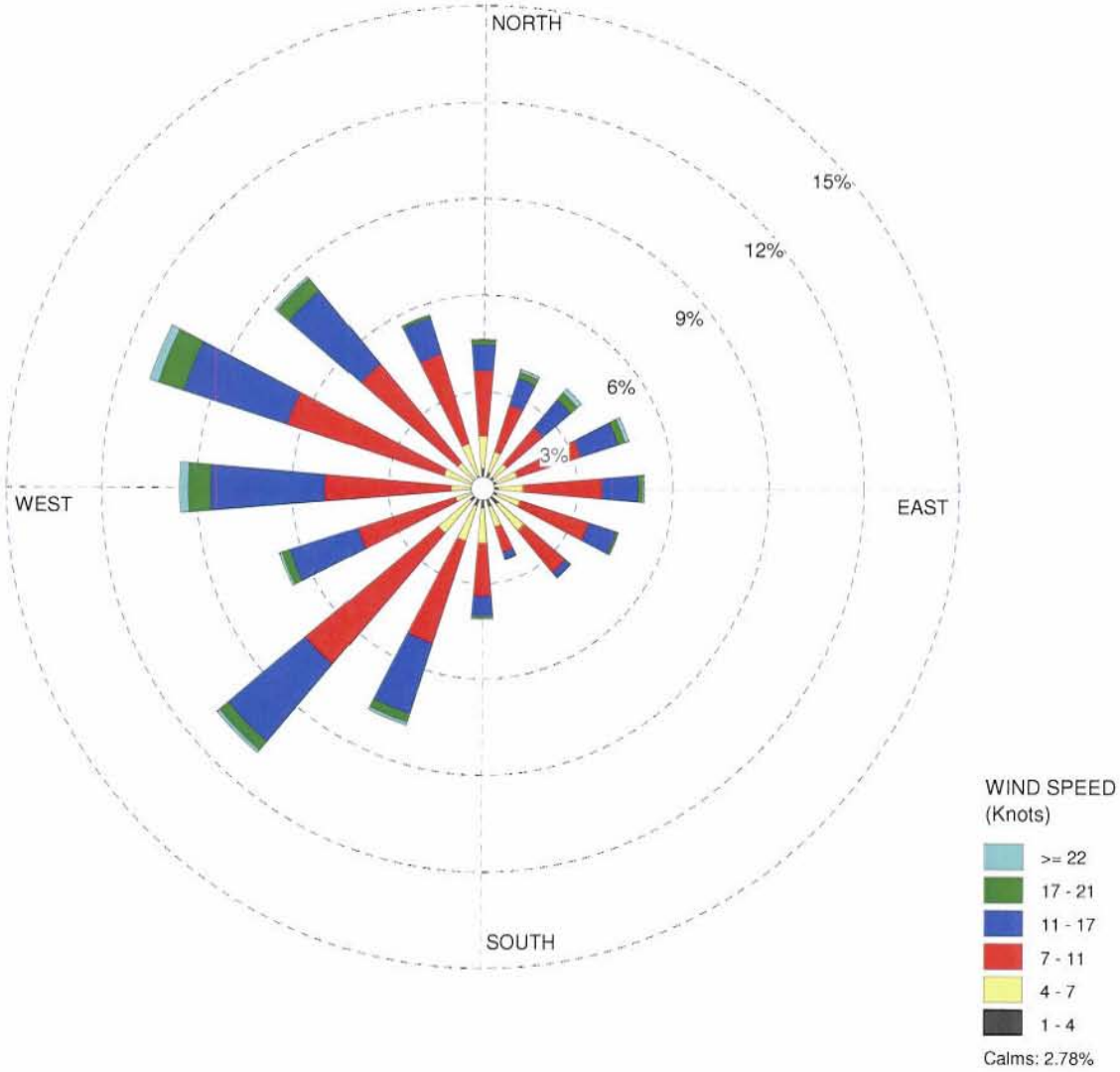

COMMENTS:	DATA PERIOD:	COMPANY NAME:	
	2000 2001 2002 2003 2004 Jan 1 - Dec 31 00:00 - 23:00	ENSR	
	CALM WINDS:	TOTAL COUNT:	
	2.78%	43848 hrs.	
	AVG. WIND SPEED:	DATE:	PROJECT NO.:
	9.76 Knots	10/25/2006	00963-035-600

Bostik
The Adhesive Company

WRPLOT View - Lakes Environmental Software

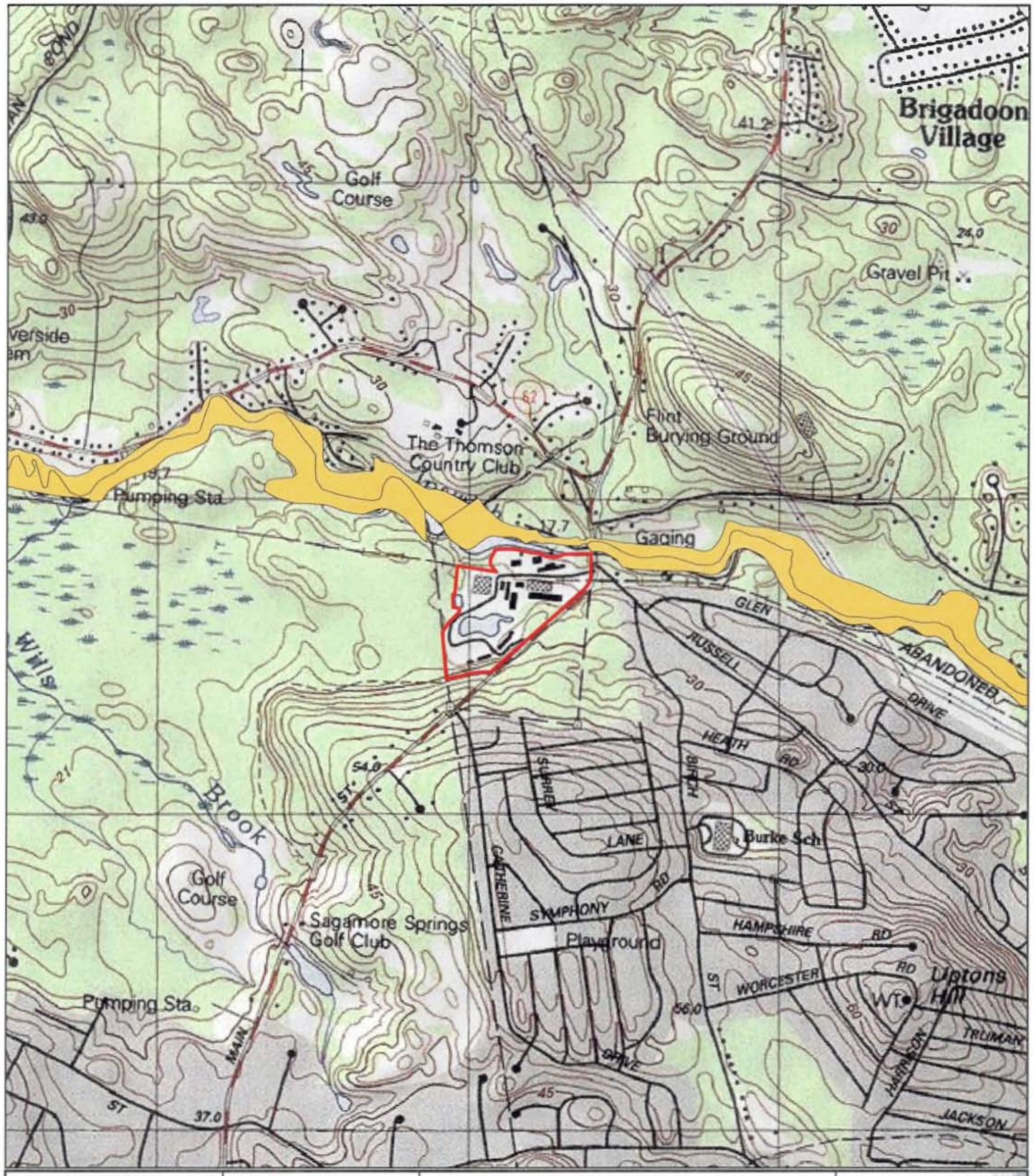

Locus Map

Legend

100-yr Flood

Fence Line

Bostik, Inc.

Figure B-6
100-Year Floodplain Map

Source: FEMA Q3 Flood Data

Bostik
The Adhesive Company

ENSR | AECOM

Scale 0 0.2 0.4 0.8 1.2 1.6 Kilometers

Section C - Waste Characteristics

C.1 Chemical and Physical Analyses [40 CFR 270.14(b)(2); 264.13(a)]

C.1.1 Containerized Waste

Bostik's Middleton facility does not store containerized wastes for 90 days or greater, and therefore this section is not applicable.

C.1.2 Waste in Tank Systems

Bostik's Middleton facility stores process waste designated as EPA Codes D001, D018 and D035 in four tanks prior to treatment in a boiler. These tanks are the Direct Solvation tank (T-9), the day tank in Polyester (DT-1), and tanks T-1 and T-2. (The day tank, DT-1, stores waste for < 90 days and, therefore, is not part of this permit application.)

One waste stream is fed to the tanks, an organic mixture consisting primarily of methanol and water. The waste tanks (T-1, T-2, T-9, and DT-1) are constructed of carbon steel operating at ambient temperature and pressure. These conditions are not expected to adversely affect the integrity of the tank by contact with the waste. It should be noted that the tanks have been in waste storage operation since the late 1980s, and routine inspections of these tanks and ancillary equipment has revealed no adverse impact of the waste on this equipment.

C.1.3 Waste in Piles

Bostik does not treat, store, or dispose of hazardous waste in piles at the Middleton facility and therefore this section is not applicable.

C.1.4 Landfilled Wastes

Bostik does not treat, store, or dispose of hazardous waste in landfills at the Middleton facility and therefore this section is not applicable.

C.1.5 Wastes Incinerated and Wastes Used in Performance Tests

Bostik does not treat, store, or dispose of hazardous waste in incineration units at the Middleton facility and therefore this section is not applicable.

C.1.6 Wastes to be Land Treated

Bostik does not treat, store, or dispose of hazardous waste in land treatment units at the Middleton facility and therefore this section is not applicable.

C.1.7 Wastes in Miscellaneous Treatment Units

Bostik does not treat, store, or dispose of hazardous waste in miscellaneous treatment units at the Middleton facility and therefore this section is not applicable.

C.1.8 Wastes in Boilers and Industrial Furnaces (BIFs)

Since the initial promulgation of the BIF rule in 1991, Bostik has monitored concentrations of the 10 BIF metals in its waste feeds on a periodic basis. Results reported to date have shown primarily non-detectable concentrations or extremely low concentrations of these metals. This is not surprising since no metals are used in the process generating the waste stream. A compilation of representative data, along with other physical and chemical characteristics of the waste and process vent gas stream, is provided in **Tables C-1, C-2 and C-3**.

Waste generation flow schematics (provided subsequently in Section D of this permit application) show that the sole waste stream fed to the boiler is the result of the production process and no other wastes are combined with this material. In addition, no blending occurs prior to firing and all measurements are provided on an "as-fired" basis.

C.1.9 Wastes on Drip Pads

Bostik does not treat, store, or dispose of hazardous waste on drip pads at the Middleton facility and therefore this section is not applicable.

C.2 Waste Analysis Plan [40 CFR 270.14(b)(3); 264.13(b),(c)]

This Waste Analysis Plan outlines the sampling, analysis, and procedural steps necessary to maintain compliance with 40 CFR 264.13(b) as referenced by 40 CFR 266.103(a)(4). This plan will offer detailed information on the following waste analysis issues:

- frequency of analysis
- analytical parameters of interest
- analytical methods
- breakdown of procedural responsibilities
- ratio of combustion mixtures

C.2.1 Parameters and Rationale

One stream, the combined distillate mixture, will be analyzed at least annually for the following parameters:

- Primary organic constituents (i.e., methanol, ethyl acetate, ethylene glycol, diethylene glycol, MEK, tetrahydrofuran, toluene and xylene)
- BIF-regulated metals (arsenic, antimony, barium, beryllium, cadmium, chromium, lead, mercury, silver and thallium)

- Other chemical/physical properties (ash content, density, heat content, water content and total chlorides content

These periodic analyses will also serve to fulfill the requirement to maintain compliance with 40 CFR 266.103(a)(6) entitled "Restrictions on Burning Hazardous Waste that is Not a Fuel".

C.2.2 Test Methods

Test methods to be used for these periodic waste analyses are as follows:

- Analysis for the majority of the metals, specifically antimony, arsenic, barium, beryllium, cadmium, chromium, lead, silver, and thallium will be conducted using Inductively Coupled Plasma – Mass Spectrometry (ICP-MS), EPA Method 6020, in order to obtain the lowest possible detection limits.

- Analysis for the remaining metal (mercury) will be conducted using Cold-Vapor Atomic Absorption Spectroscopy (CVAAS), EPA Method 7470A/7471A.

- Analysis for the volatile constituents will be done by EPA Methods 8015B and/or 8260B

- Analysis for density will be performed by ASTM D 1298

- Analysis for water content will be by ASTM D 1744 (Karl Fisher)

- Analysis for total chlorides will be conducted using ASTM D 808 / EPA Method 9056

- Analysis for ash will be conducted using ASTM D 482

- Analysis for heat content of the waste will be by ASTM D 240

Documentation on the quality assurance/quality control program and proper sample chain of custody will be obtained from the laboratory in all cases.

C.2.3 Sampling Methods

Sampling procedures will be as follows:

- For determination of volatile organics, a sample will be collected using 40-mL VOA vials with Teflon lined septum caps. Two vials will be collected with no headspace.

- For all other parameters, a sample will be collected using 500-mL or 950-mL sample containers.

Samples will be collected from a tap in the feed line immediately adjacent to the boiler. No compositing will be done because of the consistency of the feed stream among batches. All samples will be appropriately preserved (cooled), packed, and shipped using appropriate custody forms.

C.2.4 Frequency of Analyses

The following is the breakdown of the frequency with which the parameters listed above will be analyzed barring any change in the manufacturing process, raw materials, or analysis procedures at which time the sampling plan would be reevaluated.

All parameters will be analyzed at least once per calendar year for the one hazardous waste stream identified in this permit application. Should any process changes be implemented that would introduce different raw materials or new constituents, additional analyses will be performed.

The rationale for this schedule is as follows:

1. *There is little potential for cross-contamination of wastes.* All wastes are hard-piped from the point to generation to the industrial burner itself. No potential exists for other wastes being included in the stream and being fed to the industrial boiler. No metal bearing wastes are produced at the facility, so no potential for accidental mixing of metal bearing wastes with these wastes exists. Chlorinated organic solvents are not used in the one process, so no potential for accidental mixing of chlorinated organic solvent wastes with these wastes exists.

2. *There is only small variability of the waste composition.* Waste fuels are derived from consistent production processes. There is little variation in the composition of waste fuels, considering the repetitive nature of these processes. Information on the processes generating the wastes is reviewed annually and the waste fuels are sampled and analyzed, if necessary, to ensure compliance with waste properties specified in Section D and the Trial Burn Plan of this application. Additional information regarding waste fuel composition is provided in Section D of this application.

3. *Chemical/Physical stability of the waste.* Waste fuels are chemically and physically stable based on the analytical data for these wastes and the known properties of the individual constituents. No reactions have been observed during routine storage and handling of these wastes.

4. *Prior history of the facility.* Waste fuels are derived from onsite processes that are known to be reliable based on their production of chemical products within identified specifications. Historically, Bostik has not experienced significant changes in the composition of waste fuels derived from these processes.

If waste fuel properties are found to be outside the allowable limits specified in the RCRA permit for the boilers, Bostik will arrange for offsite disposal of these materials at an appropriate offsite permitted facility.

C.2.5 Additional Requirements for Wastes Generated Off Site

Bostik does not manage wastes generated off-site at the Middleton facility and therefore this section is not applicable.

C.2.6 Additional Requirements for Ignitable, Reactive or Incompatible Wastes

Controls to minimize ignition of the ignitable waste in the burn tanks include spill and containment controls, explosion proof electrical protection, flame arrestors, and daily inspection requirements. Fire protection and emergency equipment are immediately available onsite as described in **Section F, Procedures to Prevent Hazards**. All hazardous waste fuel has EPA Waste Codes D001, D018 and/or D035. Preventative maintenance systems for the tank (e.g., thickness tests) include periodic inspections to ensure corrosion is not taking place.

Reactive or incompatible wastes are not stored, treated, or disposed at the facility.

C.2.7 Additional Requirements Pertaining to BIF Facilities

Sampling and analysis parameters, methods and frequencies of determination for each constituent are addressed in the above sections. Mass flow rates for individual constituents are determined using the raw analytical data and the continuously monitored data from the polyester distillate and natural gas flow sensors described in Section 4.0 of the Trial Burn Plan attached as Volume II of this Part B Application. These sensors continuously monitor hazardous waste and natural gas fed to the boiler. Feed rates for metals and total chlorine are, in effect, continuously monitored by knowing the concentration of each constituent in each feed stream and continuously monitoring the flow rate of each feed stream.

C.3 Waste Analysis Requirements Pertaining to Land Disposal Restrictions [40 CFR 270.14(b)(3); 264.13; 264.73 and Part 268]

C.3.1 Waste Analysis

As mentioned, the sole hazardous waste stored and treated at Bostik's Middleton facility is the hazardous waste fuel, classified as a characteristic waste D001 (ignitable) with potential for listing as D018 and/or D035. As there are no scrubbers and the waste contains little ash, no process residuals have been generated to date from treatment in the boiler. There may, however, be a small amount of ash produced occasionally resulting from the cleaning of the boiler. As no such stream has been produced in the past, no analytical data is available.

C.3.1.1 Spent Solvent and Dioxin Wastes

Bostik does not treat, store, or dispose of F001-F005 spent solvent wastes or F020-F023 or F026-F028 dioxin-containing waste at the Middleton facility.

C.3.1.2 California List Wastes

Bostik facility does not treat, store, or dispose of hazardous waste containing any of the following constituents at the described levels at the Middleton facility:

- Liquid hazardous wastes containing PCBs at concentrations greater than or equal to 50 ppm;
- Liquid characteristic wastes containing over 134 mg/l nickel and/or 130 mg/l thallium; or
- Characteristic wastes containing Halogenated Organic Compounds (HOCs) at concentrations greater than or equal to 1000 mg/l (liquids) or mg/kg (solids), where the HOCs are not derived from listed hazardous wastes (i.e., F-, K-, P- or U-listed wastes)

C.3.1.3 Listed Wastes

The waste treated in the boiler at the Middleton facility does not carry any F-listed waste codes, for which universal treatment standards are defined at 40 CFR Part 268.40. Wastes are treated on-site in a boiler, and, as there are no scrubbers and the waste contains little ash, no process residuals have been generated to date from treatment in the boiler. There may, however, be a small amount of ash produced at some times resulting from the cleaning of the boiler. This ash must meet the land disposal restrictions for treatment standards for the waste code treated (D018 and D035). If a residue results from the cleaning of the boiler, an analysis will be conducted on the residue for the parameters listed in Part 268.40, and which potentially could be present in the waste feed to the boiler, to confirm the treatment standards were met. The parameters for analysis and the acceptable land disposal restriction (LDR) treatment standards are:

- Benzene – 10 mg/kg
- MEK – 36 mg/kg
- Methanol – NA

C.3.1.4 Characteristic Wastes

As mentioned, Bostik's Middleton facility stores and treats characteristic waste D001 (ignitable) in the boiler. Again, as there are no scrubbers and the waste contains little ash, no process residuals have been generated to date from treatment in the boiler. There may, however, be a small amount of ash produced at some times resulting from the cleaning of the boiler and this ash must also meet the land disposal restrictions for treatment standards for the waste code treated (D001).

The waste fuel fits the description of a high TOC ignitable characteristic liquid based on 40 CFR 261.21[a][1] (greater than or equal to 10% total organic carbon) for which the treatment standards prior to land disposal is recovery of organics (RORGS) or combustion (CMBST). [Treatment standards as described in 40 CFR Part 268.40 as amended at FR 47982 Vol. 59 No. 180, Land Disposal Restriction Phase II Universal Treatment Standards for Organic Toxicity Wastes and Newly Listed Wastes, 19 September 1994). The definition of CMBST, as stated in Part 268.42 Table 1, is: "combustion in incinerators, boilers, or industrial furnaces operated in accordance with the applicable requirements of 40 CFR part 264 subpart O, and part 266, subpart H." Therefore the treatment of this waste in Bostik's Middleton facility's boiler constitutes proper treatment of the D001 waste prior to land disposal.

C.3.1.5 Radioactive Mixed Waste

Bostik does not treat, store, or dispose of radioactive mixed wastes at the Middleton facility.

C.3.1.6 Leachates

Bostik does not treat, store, or dispose of single-source or multi-source leachate generated from liquids percolating through hazardous waste at the Middleton facility.

C.3.1.7 Lab Packs

Bostik does not treat, store, or dispose of lab packs within the BIF process at the Middleton facility.

C.3.1.8 Contaminated Debris

Bostik does not treat, store, or dispose of contaminated debris within the BIF process at the Middleton facility.

C.3.1.9 Waste Mixtures and Wastes with Overlapping Requirements

The waste treated in the boiler carries the EPA Waste Code D001. As discussed above, combustion is defined as best demonstrated available technology (BDAT) for the D001 code (40 CFR Part 268.40).

C.3.1.10 Dilution and Aggregation of Wastes

Bostik does not perform dilution or aggregation of hazardous wastes at the Middleton facility.

C.3.2 Notification, Certification and Recordkeeping Requirements

If a treatment residue subject to the above land disposal restriction is generated from the treatment of waste in the boiler and sent off site for disposal, it will be accompanied by a land disposal restriction document providing the proper information for treatment and disposal.

C.3.2.1 Retention of Generator Notices and Certifications

If a treatment residue subject to the above land disposal restriction is generated from the treatment of waste in the boiler and sent off site for disposal, the following notices and certifications submitted by the initial generator of the waste will be re-reviewed and maintained:

Notices of restricted wastes not meeting treatment standards: Notices of restricted wastes meeting applicable treatment standards and prohibition levels, including the information in 268.7(a)(2). Such records will be maintained by the Environmental Health and Safety Department.

C.3.2.2 Notification and Certification Requirements for Treatment Facilities

If a treatment residue subject to the above land disposal restriction is generated from the treatment of waste in the boiler and sent off site for disposal, Bostik will submit a notice and certification to the land disposal facility with each shipment of treatment residue of a restricted waste. The notice will include the information listed in 268.7(b)(4) and 268.7(b)(5).

C.3.2.3 Notification and Certification Requirements for Land Disposal Facilities

Bostik does not operate a hazardous waste land disposal facility at the Middleton facility.

C.3.2.4 Wastes Shipped to Subtitle C Facilities

If a treatment residue subject to the above land disposal restriction is generated from the treatment of waste in the boiler and sent to a Subtitle C land disposal facility for disposal, Bostik will submit notifications and certifications in compliance with the notice and certification requirements applicable to generators under 268.7(a).

C.3.2.5 Wastes Shipped to Subtitle D Facilities

If a treatment residue subject to the above land disposal restriction is generated from the treatment of waste in the boiler and sent to a Subtitle D land disposal facility for disposal, Bostik will submit a one-time notification and certification for the characteristic wastes that have been treated to remove the hazardous characteristic and are no longer considered hazardous. Bostik will place a certification (and all treatment records) in the facility's files and send a notification and certification to the EPA Regional Administrator describing the waste and applicable treatment standards and identifying the solid waste management disposal facility receiving the waste. The notification and certification will be updated and refiled if the process or operation generating the waste and/or if the Subtitle D facility receiving the waste changes.

C.3.2.6 Recyclable Materials

Bostik does not use wastes that are recyclable materials in a manner constituting disposal, in accordance with 266.20(b) at the Middleton facility.

C.3.2.7 Recordkeeping

Bostik's Middleton facility will:

- Determine if the waste is restricted from land disposal and keep documentation of that determination; and
- Maintain documentation to indicate where restricted wastes were treated, stored, and/or disposed.

All waste analysis data will be retained onsite in the facility's files.

C.3.3 Requirement Pertaining to the Storage of Restricted Wastes

The Bostik Middleton facility does not store restricted wastes for > 90 days.

C.3.3.1 Restricted Wastes Stored in Containers

Bostik's Middleton facility does not store restricted wastes in containers for > 90 days.

C.3.3.2 Restricted Wastes Stored in Tanks

Bostik's Middleton facility maintains data in the facility operating record on the description of the contents of tanks, the quantity of hazardous waste introduced into the tanks, and the flow of hazardous waste into each tank.

C.3.3.3 Storage of Liquid PCB Wastes

Bostik's Middleton facility does not store liquid hazardous wastes containing concentrations of PCBs greater than or equal to 50 ppm.

C.3.4 Exemptions, Extensions and Variances to Land Disposal Restrictions

C.3.4.1 Case-by-Case Extensions to an Effective Date

Bostik's Middleton facility is not requesting an extension to the effective date of any restriction in Subpart C of Part 268.

C.3.4.2 Exemption from Prohibition

Bostik's Middleton facility is not requesting an exemption from a prohibition for the disposal of a restricted waste in a particular unit or units.

C.3.4.3 Variance from a Treatment Standard

Bostik's Middleton facility is not petitioning the Regional Administrator for a site-specific variance from a specific treatment standard if a waste cannot be treated to the specified level or if the treatment technology is not appropriate to the waste.

C.3.4.4 Requirements for Surface Impoundments Exempted from Land Disposal Restrictions

Bostik does not operate a hazardous waste surface impoundment at the Middleton facility.

Table C-1 Representative Analytical Data for Polyester Distillate Waste Stream

Analytical Parameters	Units	Expected Range
METALS --		
Antimony	mg/kg	2 - 10
Arsenic	mg/kg	0 - 0.1
Barium	mg/kg	0 - 0.2
Beryllium	mg/kg	0 - 0.06
Cadmium	mg/kg	0 - 0.03
Chromium	mg/kg	0 - 1.5
Lead	mg/kg	0 - 0.1
Mercury	mg/kg	0 - 0.04
Silver	mg/kg	0 - 0.03
Thallium	mg/kg	0 - 0.4
PHYSICAL PARAMETERS --		
Chlorine	mg/kg	200 - 400
Ash Content	% (wt)	0.1 - 0.6
Heat Content	Btu/lb	5,300 - 7,500
Density	g/cc	0.90 - 1.00

C:\PROJECTS\BOSTIK\CY 2006\Part B Renewal\[Feed Stream Data.xls]Organics

Note: Data from January 2003 compliance recertification and November 2006 analyses.

Table C-2 Major Constituents Typically Expected in Polyester Distillate

Component	Polyester Distillate (%)	RCRA Part 261 App VIII?	NESHAPs Sect. 112(b) HAP?
Methanol	10 - 40	No	Yes
Water	30 - 50	No	No
Xylene	0 - 5	No	Yes
Butanediol	4 - 10	No	No
Diethylene Glycol	1 - 3	No	No
Tetrahydrofuran	5 - 15	No	No
Ethylene Glycol	0 - 20	No	Yes
Dimethyl terephthalate	0 - 2	No	No
Hexanediol	1 - 3	No	No
Ethyl Acetate	0 - 5	No	No
Methyl Ethyl Ketone	0 - 5	Yes	Yes
Toluene	0 - 5	Yes	Yes

Table C-3 Expected Composition of Vent Gas Stream

Target Analyte	Overall Test Results, ppm(v/v)		
	Average	Minimum	Maximum
Methyl Ethyl Ketone	321	110	1,432
Tetrahydrofuran	9,712	5,599	38,160
Cyclohexane	8.3	< 5.0	50
Methyl Cyclohexane	< 5.0	< 5.0	< 5.0
Toluene	11	< 5.0	23
m- & p-Xylene	66	47	93
Methanol	10,970	7,141	22,131
o-Xylene	16	7.0	22
Ethyl Acetate	< 5.0	< 5.0	< 5.0
Hexane	< 5.0	< 5.0	< 5.0
Unknowns (as Hexane)	7.5	5.4	14

C:\PROJECTS\BOSTIK\CY 2006\Part B Renewal\[Feed Stream Data.xls]Vent Gas

Note: Data from testing conducted on April 11, 2006

Section D - Process Information

Bostik, Inc. operates a chemical manufacturing facility, located in Middleton, Massachusetts. A pumpable-liquid hazardous waste is generated from the plant's polyester and direct solvation resin manufacturing units. This waste byproduct is piped to the main distillate storage tanks designated as T-1 and T-2. The hazardous waste is currently burned in a vertically-fired process heater, referred to as the Polyester Burner Unit. This unit provides energy for the thermal requirements associated with the polyester resin manufacturing processes (i.e., to preheat the reactor feed material). A simplified waste flow diagram for the overall process is shown in **Figure D-1**. A more detailed process flow diagram depicting distillate and vapor flow is shown in **Figure D-2**.

D.1 Containers [40 CFR 270.15; 264.170]

Bostik does not store waste associated with the BIF in containers at the Middleton facility and, therefore, this section is not applicable.

D.2 Tank systems [40 CFR 270.16; 264.191 – 194]

D.2.1 Tank Systems Descriptions

Three aboveground tanks are included in this permit application.

Tanks T-1 and T-2, the distillate storage tanks (#27001 and #27002), are two vertical 8,800-gallon mild carbon steel tanks located adjacent to Building 27, which contain polyester distillate for feed to the burner. Both are designed in accordance with U.L. 142 Standard except that they have flat roofs. The tanks are rated for 1 psi. Both are fabricated from carbon steel with top, bottom, and walls at $^{5}/_{16}$ inch thick. Additional information on tank construction is shown in the tank certification report provided in **Attachment D-1**.

Tank T-9, the direct solvation tank (#09518) is a 10,000 gallon stainless steel tank located outside Building 9 which contains polyester distillate generated by the direct solvation department. The tank is constructed in accordance with ASME pressure vessel code, Section VIII, Division I. The tank is a horizontal tank with dished heads rated for atmospheric service. The tank is fabricated from 304 stainless steel with the walls and heads both $^{3}/_{16}$ inch thick. Additional information on tank construction is provided in the tank certification report in Attachment D-1.

D.2.1.1 Dimensions and Capacity of Each Tank

Tanks T-1 and T-2 are each 8,800 gallon tanks, with dimensions of 15-ft high x 10-ft O.D. and wall thickness of $^{5}/_{16}$ inches. Tank T-9 is a 10,000 gallon tank with dimensions of 18-ft long x 10-ft O.D. and wall thickness of $^{3}/_{16}$ inches.

D.2.1.2 Description of Feed Systems, Safety Cutoff, Bypass Systems and Pressure Controls

The distillate generated from the manufacture of polyesters is formed from two distinct processing operations. Both stages require heat to be added to the reaction vessel and a distillate is produced.

The distillate generated by the polyester department is collected into the "Day Tank", a less than 90 day storage tank not covered by this permit application. The Day Tank (DT-1) is a 950-gallon tank located under the vacuum pump room in Building 39. When the Day Tank's level reaches a predetermined point, the pump and bottom outlet valve are turned on and the tank's contents are pumped to either T-1 or T-2. Should the level in the tank continue to rise above the pump out point, an alarm signal is sent to the data acquisition system. The operator must take action at this point.

T-1 and T-2 are also equipped with overflow indicators. At the high-high level in the distillate tanks, the day tank's transfer pump is disabled and an alarm displayed on the control system.

Distillate from T-9 is hard-piped directly to T-1 and T-2. The material is manually pumped through the pump system controlled by the polyester operators. An automatic distillate transfer pump cut-off is located in the direct solvation department should a problem develop during transfer.

D.2.1.3 Diagram of Piping, Instrumentation and Process Flow

A detailed process and instrumentation diagram (P&ID) depicting distillate and vapor flow is provided in **Figure D-3**. Additional piping details for Tanks T-1 and T-2 is provided in **Figure D-4**. An overview of the facility's distillate storage and transfer operations is shown in **Figure D-5**.

D.2.1.4 Ignitable, Reactive and Incompatible Wastes

Each tank contains ignitable wastes. Each tank is equipped with pressure relief valves to prevent overpressure of the tank and subsequent rupturing. The pressure relief valves are equipped with flame arrestors to prevent back flash. No smoking is allowed in the tank areas.

No incompatible wastes are stored in the tanks.

D.2.2 Existing Tank Systems

D.2.2.1 Assessment of Existing Tank System's Integrity

This information is provided in Attachment D-1.

D.2.3 New Tank System

The tanks described in this application are existing waste storage tanks which have previously been used as < 90-day waste storage tanks (no permit required). One goal of this updated application is to permit these tanks to allow storage for greater than 90 days prior to treatment in the burner. For this reason, this application is treating these tanks as "existing" tanks, and not "new" tank systems.

D.2.3.1 Assessment of New Tank System's Integrity

Not applicable.

D.2.3.2 Description of Tank System Installation and Testing Plans and Procedures

Not applicable.

D.2.4 Containment and Detection of Releases

D.2.4.1 Plans and Description of the Design, Construction and Operation of the Secondary Containment System

The distillate storage tanks (T-1 and T-2) are located within a diked area adjacent to Building 27 with a coated concrete floor. The secondary containment system for the tanks consists of a coated concrete dike which is 16 feet wide by 30 feet long by 44 inches high and 10 inches thick.

The direct solvation tank is located adjacent to Building 9. Secondary containment consists of a coated reinforced concrete dike with inside dimensions of 15 feet by 30 feet by 42 inches with a coated reinforced concrete floor. The walls for this area are 10 inches thick and the floor is 4½ inches thick.

The coating for the secondary containment in each tank area is Duromar® 4320 High Performance Lining.

Tank Age Determination

Tanks T-1 and T-2 were fabricated and installed in 1992. The direct solvation tank was fabricated in 1987 and installed in 1988.

Requirements for Secondary Containment and Leak Detection

As mentioned, the secondary containment areas for both tank areas are constructed of coated concrete diked areas with coated concrete floors. The specification sheet for the Duromar® coating indicates a high degree of chemical resistance.

Procedures in place for daily inspection of the tanks and secondary containment system and described in **Section F** of this application will be the primary means of detecting leaks from the tanks. Daily inspections are conducted of the secondary containment system. Additional procedures, also described more fully in **Section F** of this application, provide information on the procedures to be followed upon discovery of a leak or spill into the secondary containment area. All spilled material will be removed from the secondary containment system within 24 hours of discovery of the spill.

The secondary containment system is also periodically inspected for cracks. Cracks in the secondary containment are repaired as soon as practicable to prevent leakage to the environment.

Requirements for External Liner, Vault, Double-Walled Tank or Equivalent Device

Distillate Storage Area (Tanks T-1 and T-2)

The inside dimensions of the containment system are 30 feet by 16 feet by 44 inches high. The dike walls are 10-inches thick. The volume of the containment area is therefore:

30 ft x 16 ft x 3.67 ft = 1,762 cubic feet.

Tank displacement within the diked area equals:

(5 ft. radius)^2 x π x 3.67 ft. = 288 cubic feet.

Net containment volume therefore equals 1,474 cubic feet, or, at 7.481 gallons per cubic foot, 11,027 gallons. The largest tank within this boundary is 8,800 gallons.

Failure of one 8,800 gallon tank would result in 1,176 cubic feet of liquid in the secondary containment area. The effective area of the secondary containment is therefore:

(30 ft x 16 ft) - ((5 ft. radius)^2 x π) = 401 ft^2

The depth of this material in this spill area would be:

1,176 ft^3 / 401 ft^2 = 2.93 feet (35.2 inches)

This would leave 44 – 35.2, or 8.8 inches, of remaining freeboard. Data presented in the Northeast Regional Climate Center Publication No. RR93-5 (September 1993) indicates a 25-year storm to be 5.93 inches. Therefore sufficient volume exists within the secondary containment area to contain both a simultaneous tank failure and a 25-year storm event.

Direct Solvation Tank (Tank T-9)

The secondary containment system for Tank T-9 is a coated concrete area with inner dimensions of 30 feet by 15 feet and 42 inches high. The dike walls are also 10-inches thick. The containment volume is therefore:

30 ft x 15 ft x 3.5 ft = 1,575 cubic feet.

Assuming 7.481 gallons per cubic foot, the volume of the containment area is approximately 11,780 gallons. Since Tank T-9 is a 10,000 gallon tank, the containment area is sufficient to contain spillage as a result of the total failure of T-9.

The T-9 containment area is covered by a roof to prevent the accumulation of precipitation in the secondary containment area.

Secondary Containment and Leak Detection Requirements for Ancillary Equipment

All piping for this system is above ground piping subject to daily inspections, as described in **Section F** of this application. All pumps associated with these tanks are located in Building 27, in a concrete diked area.

For the T-9 area, pumps and associated equipment is located within a bermed area adjacent to the tank containment area. Again, all piping is aboveground and inspected daily, as discussed in **Section F**.

Containment Buildings Used as Secondary Containment for Tank Systems

Not applicable.

D.2.4.2 Requirements for Tank Systems Until Secondary Containment is Implemented

Not applicable.

D.2.4.3 Variance from Secondary Containment Requirements

No variance is being sought.

D.2.5 Controls and Practices to Prevent Spills and Overflows

As mentioned, all tanks subject to this application have been in use as < 90-day hazardous waste storage tanks since 1992 and 1988. Routine thickness testing of the tanks, provided in Attachment D-1, has indicated no degradation of the tanks in that period. Therefore there is no reason to suspect that the waste will cause corrosion of the units.

The distillate generated from the manufacture of polyesters is formed from two distinct processing operations. Both stages require heat to be added to the reaction vessel and a distillate is produced. The distillate generated by the polyester department is collected into the "Day Tank", a less than 90-day storage tank not covered by this permit application. The Day Tank is a 950 gallon tank located under the vacuum pump room in Building 39. When the Day Tank's level reaches a predetermined point, the pump and bottom outlet valve are turned on and the tank's contents are pumped to either T-1 or T-2. Should the level in the tank continue to rise above the pump out point, an alarm signal is sent to the data acquisition system. The operator must take action at this point.

All tanks are equipped with overflow indicators. Overflow of the tanks is prevented by a Magnetrol high level float switches mounted on the top of the tanks and interfaced with the control system. Should a high level condition occur, the float switch signals the control system and alarms occur. All pump operations stop until the condition is corrected.

Distillate generated by the direct solvation department is hard-piped directly to T-1 and T-2. The material is pumped through the pump system controlled by the polyester department operators. An automatic distillate transfer pump cut-off is located in the direct solvation department should a problem develop during transfer.

Detailed plans for the schedule and procedure for inspecting the overfill controls, aboveground portions of the tank system, construction materials and the area immediately surrounding the externally accessible portion of the entire tank system are provided in **Section F** of this application.

D.3 Waste Piles [40 CFR 270.18 and 264.250 – 259]

Bostik does not store waste in waste piles or containment buildings at the Middleton facility and, therefore, this section is not applicable.

D.4 Surface Impoundments [40 CFR 270.17(a)]

Bostik does not store or treat waste in surface impoundments at the Middleton facility and, therefore, this section is not applicable.

D.5 Incinerators [40 CFR 270.19; 264.340; and 264.351]

Bostik does not treat waste in an incinerator at the Middleton facility and, therefore, this section is not applicable.

D.6 Landfills [40 CFR 270.21 and 264.300 – 317]

Bostik does not dispose of waste in landfills at the Middleton facility and, therefore, this section is not applicable.

D.7 Land Treatment [40 CFR 270.20 and 264.270 – 283]

Bostik does not use land treatment at the Middleton facility and, therefore, this section is not applicable.

D.8 Miscellaneous Units [40 CFR 270.23 and 264.601]

Bostik does not treat, store or dispose of waste in miscellaneous treatment units at the Middleton facility and, therefore, this section is not applicable.

D.9 Boilers and Industrial Furnaces [40 CFR 270.22 and 266.100 – 112]

Bostik burns polyester distillate generated by the polyester and direct solvation departments in a vertically fired cold chamber heater (boiler) designated as the Struthers Wells industrial boiler. This boiler is rated at 7.5 x 10^6 Btu/hr heat input with the energy recovered used for the manufacturing process. Exhaust gasses from the unit pass through two economizers and then out to atmosphere through a 24-inch ID stack. A piping and instrumentation diagram for the burner system is provided in **Figure D-6**. Additional engineering details for this unit are provided in Section 4.0 of the Trial Burn Plan (Volume II of this permit application). An additional drawing depicting plan and elevation views of the burner area are shown in **Figure D-7**.

D.9.1 Waivers / Exemptions

D.9.1.1 Waiver of Destruction and Removal Efficiency (DRE) Trial Burn

Bostik is not applying for a waiver from the DRE Trial Burn for Boilers.

D.9.1.2 Low Risk Waste Exemption

Bostik is not applying for the low risk waste exemption.

D.9.1.3 Waiver of Particulate Matter Standard

Bostik is not applying for a waiver from the particulate matter standard.

D.9.1.4 Waiver of Trial Burn for Metals

Since the inception of the BIF rules, Bostik has complied with the interim status emission rate limits for metals by applying the Tier 1A (adjusted Tier 1) metals feed rate limits to the waste feed. Bostik intends to continue to comply with these rates under permitted status. Calculations of the maximum allowable metals feed rates are provided in **Section 2.0 of the Trial Burn Plan** (Volume II of this permit application).

The polyester Burner is the sole RCRA-regulated hazardous waste combustion unit at the site. There are not multiple stacks for this unit.

D.9.1.5 Waiver of Trial Burn for HCl / Cl_2

Since the inception of the BIF rules, Bostik has complied with the interim status emission rate limits for hydrogen chloride / chlorine by applying the Tier 1A (adjusted Tier 1) total chloride feed rate limits to the waste feed. Bostik intends to continue to comply with these rates under permitted status. Calculations of the maximum allowable total chloride feed rate are provided in **Section 2.0 of the Trial Burn Plan** (Volume II of this permit application).

The polyester Burner is the sole RCRA-regulated hazardous waste combustion unit at the site. There are not multiple stacks for this unit.

D.9.2 Pre-Trial Burn Requirements for New BIFs

The Bostik boiler is an existing interim status unit and not a new BIF and, therefore, this section is not applicable.

D.9.3 Trial Burn Requirements for All BIFs

A Trial Burn Plan is included as **Volume II** to this permit application.

D.9.4 Trial Burn Results

A Trial Burn report will be submitted within 90 days of completion of the trial burn, as described in Sections 5.8 and 6.10 of the Trial Burn Plan.

D.9.5 Post-Trial Burn Requirements for New BIFs

The Bostik boiler is an existing interim status unit and not a new BIF and, therefore, this section is not applicable.

D.9.6 Data-in-Lieu-of Trial Burn

Bostik is not submitting any data-in-lieu of a Trial Burn and, therefore, this section is not applicable.

D.9.7 Alternative Hydrocarbons Limit for Industrial Furnaces

The Bostik boiler is not an industrial furnace and, therefore, this section is not applicable.

D.9.8 Alternative Metals Implementation Approach

Bostik plans to continue to comply with the adjusted Tier 1 feed rate limits. No alternative approach is being proposed.

D.9.9 Monitoring Requirements

Bostik monitors the following parameters on a continuous basis:

For conformance with the organic emission standards in 266.104:

- Feed rate of hazardous waste and other fuels.
- Combustion gas temperature.
- Carbon monoxide and oxygen.

For conformance with the particulate emission standard in 266.105:

- Total ash feed rate from hazardous waste and fuel.
- Device production rate.

For conformance with the metal emission standards in 266.106:

- Total feed rate of each metal in hazardous waste and other fuels.
- Total feed rate of hazardous waste.

For conformance with HCl/Cl_2 emission standards in 266.107:

- Feed rate of total chlorine/chloride in hazardous waste and fuels.
- Feed rate of total hazardous waste.

D.9.10 Automatic Waste Feed Cutoff System

A description of the automatic waste feed cutoff system, including pre-alarm systems is included in **Section 4.13 of the Trial Burn Plan** (Volume II).

D.9.11 Direct Transfer Standards

Bostik does not directly feed hazardous waste from a transport vehicle to the BIF unit and, therefore, this section is not applicable.

D.9.12 Bevill Residues

Bostik is not claiming residues are excluded from regulation under the Bevill exclusion and, therefore, this section is not applicable.

Figure D-1 Waste Flow Diagram

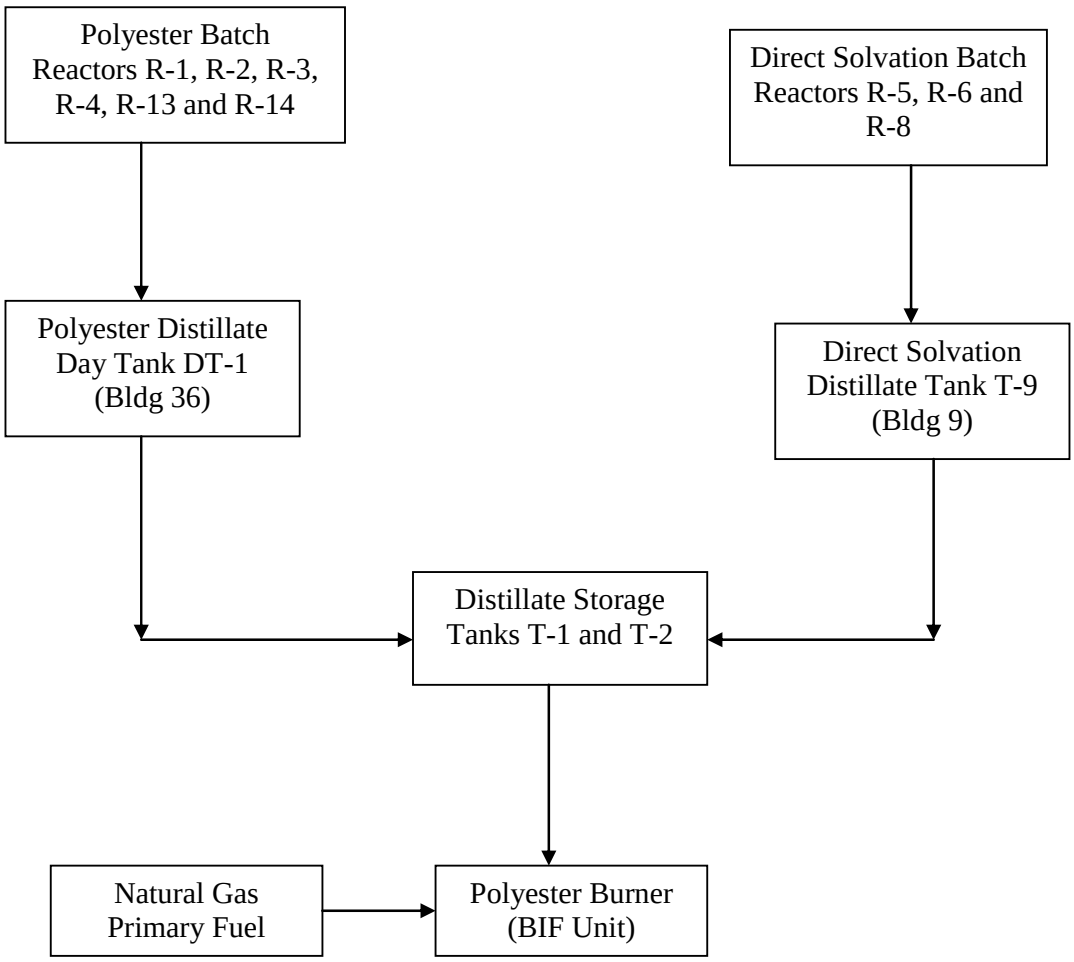

Figure D-2 Process Flow Diagram

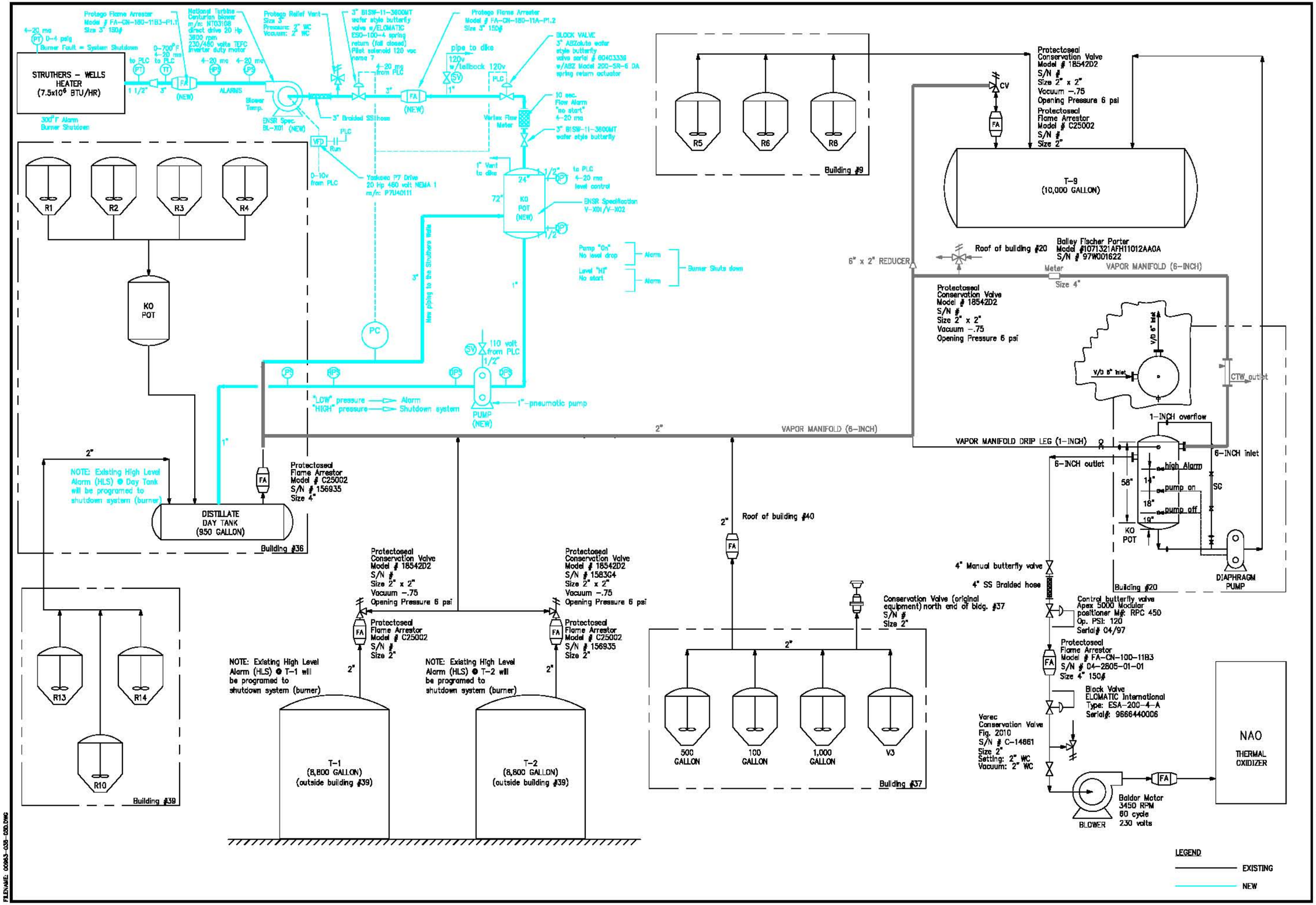

REVISIONS			
NO.:	DESCRIPTION:	DATE:	BY:
1	Revised 07/13/06...corrected vacuum		
	design # from 75 to -.75		
2	Revised 09/28/06...updated test #		Bostik
	equipment @ both existing TO & SW		JJC

DESIGNED BY:	DRAWN BY:	CHECKED BY:	APPROVED BY:
X	K.P.B.	D.R.	X

ENSR | AECOM
ENSR CORPORATION
2 TECHNOLOGY PARK DRIVE
WESTFORD, MASSACHUSETTS 01886
PHONE: (978) 589-3000
FAX: (978) 589-3100
WEB: HTTP://WWW.ENSR.AECOM.COM

PROCESS FLOW DIAGRAM
BOSTIK, INC.
211 BOSTON STREET
MIDDLETON, MASSACHUSETTS

SCALE:	DATE:	PROJECT NUMBER:
NONE	11/06	00963-035

FIGURE NUMBER:
D-2

SHEET NUMBER:
X

FILENAME: 00963-035-020.DWG

Figure D-3 Detailed Process and Instrumentation Diagram

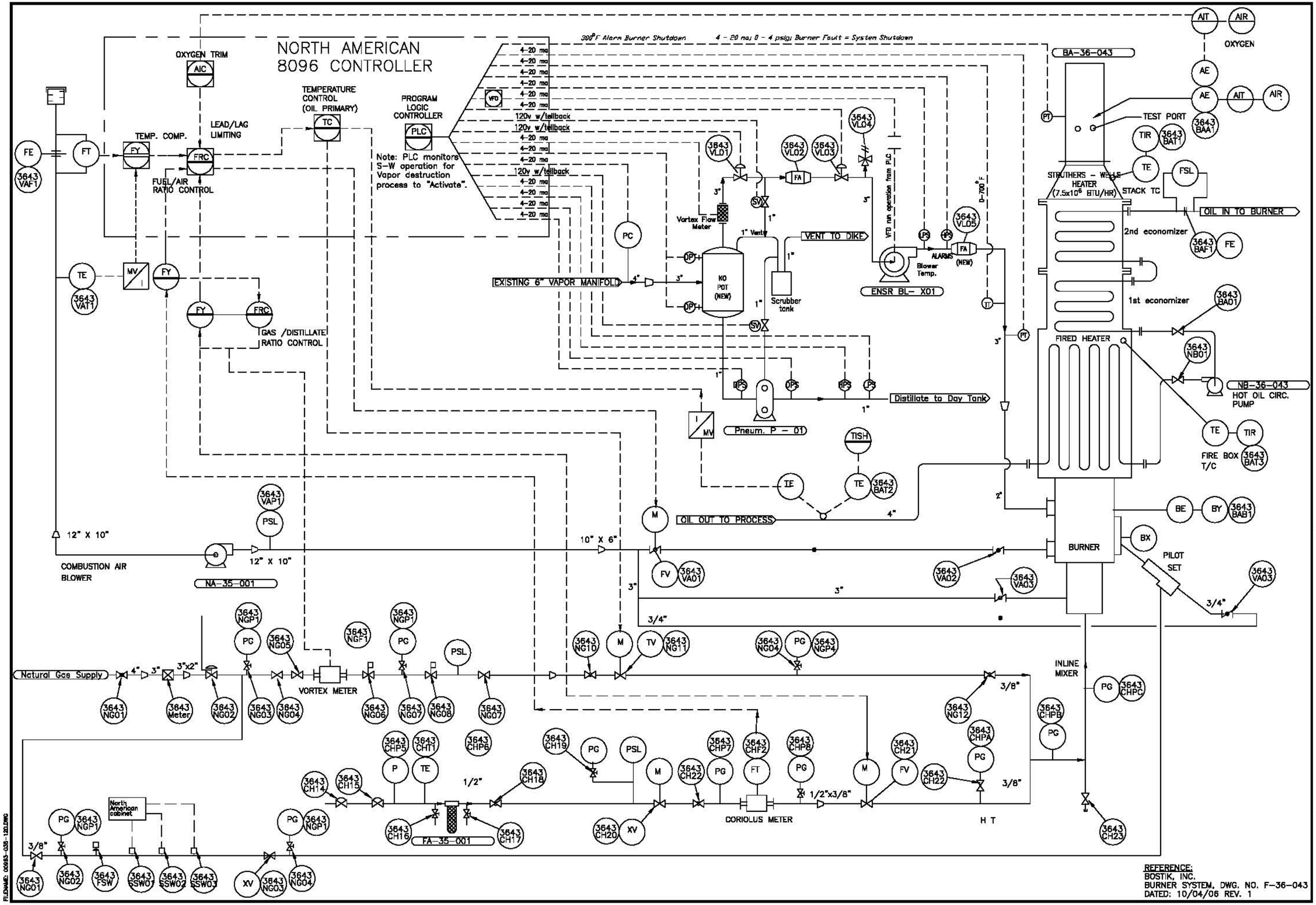

REFERENCE:
BOSTIK, INC.
BURNER SYSTEM, DWG. NO. F-36-043
DATED: 10/04/06 REV. 1

REVISIONS			
NO.:	DESCRIPTION:	DATE:	BY:

DESIGNED BY: X
DRAWN BY: K.P.B.
CHECKED BY: D.R.
APPROVED BY: X

ENSR | AECOM

ENSR CORPORATION
2 TECHNOLOGY PARK DRIVE
WESTFORD, MASSACHUSETTS 01886
PHONE: (978) 589-3000
FAX: (978) 589-3100
WEB: HTTP://WWW.ENSRAECOM.COM

DETAILED P&ID
BOSTIK, INC.
211 BOSTON STREET
MIDDLETON, MASSACHUSETTS

PROJECT NUMBER: 00963-035
DATE: 11/06
SCALE: NONE

FIGURE NUMBER: D-3

SHEET NUMBER: X

Figure D-4 Building 27 Plan

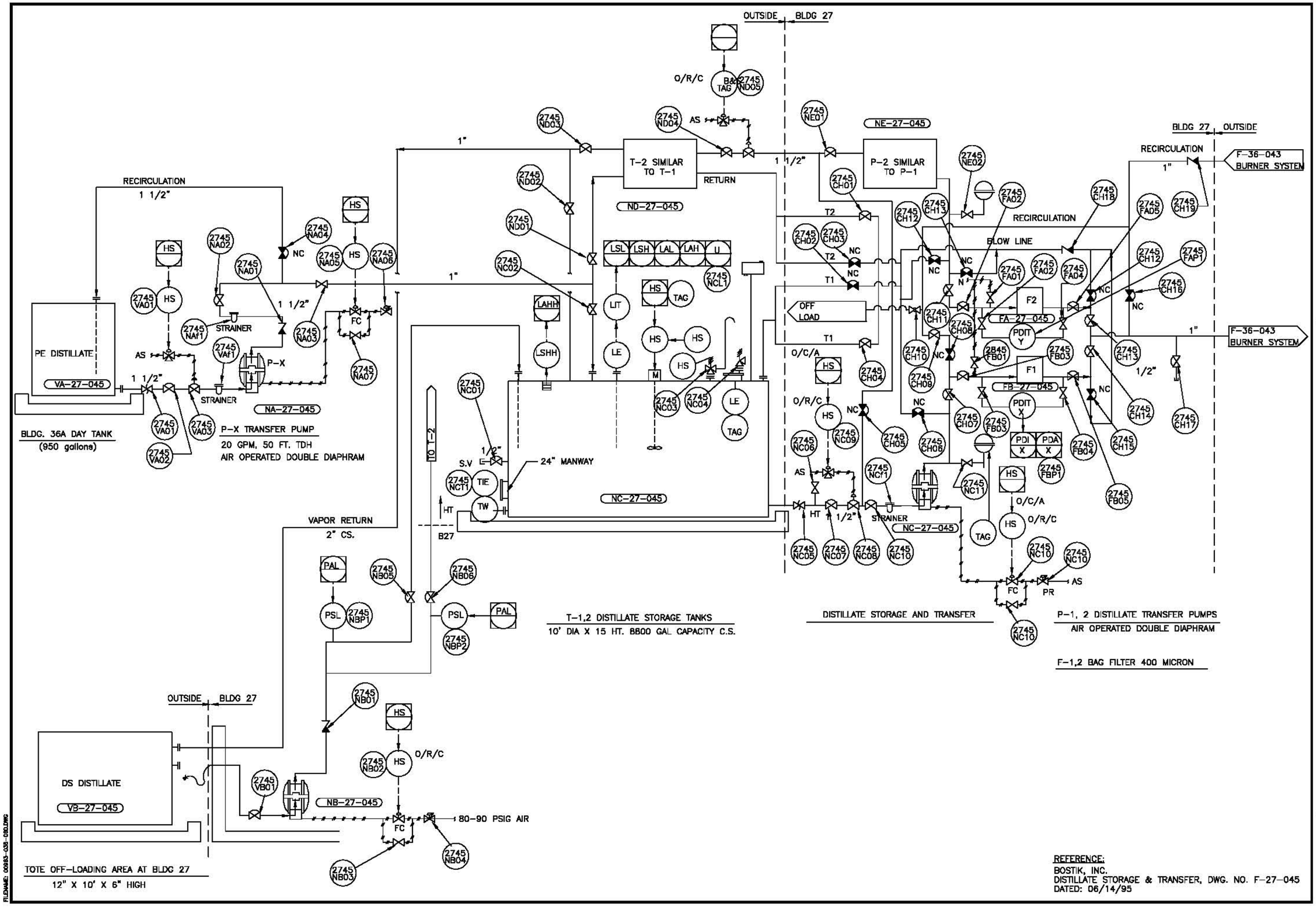

REFERENCE:
BOSTIK, INC.
DISTILLATE STORAGE & TRANSFER, DWG. NO. F-27-045
DATED: 06/14/95

REVISIONS			
NO.:	DESCRIPTION:	DATE:	BY:

DESIGNED BY: X
DRAWN BY: K.P.B.
CHECKED BY: D.R.
APPROVED BY: X

ENSR | AECOM
ENSR CORPORATION
2 TECHNOLOGY PARK DRIVE
WESTFORD, MASSACHUSETTS 01886
PHONE: (978) 589-3000
FAX: (978) 589-3100
WEB: HTTP://WWW.ENSRAECOM.COM

DISTILLATE STORAGE & TRANSFER
PROCESS FLOW DIAGRAM
BOSTIK, INC.
211 BOSTON STREET
MIDDLETON, MASSACHUSETTS

SCALE:	DATE:	PROJECT NUMBER:
NONE	11/06	00963-035

FIGURE NUMBER:
D-4

SHEET NUMBER:
X

FILENAME: 00963-035-050.DWG

Figure D-5 Distillate Storage and Transfer Diagram

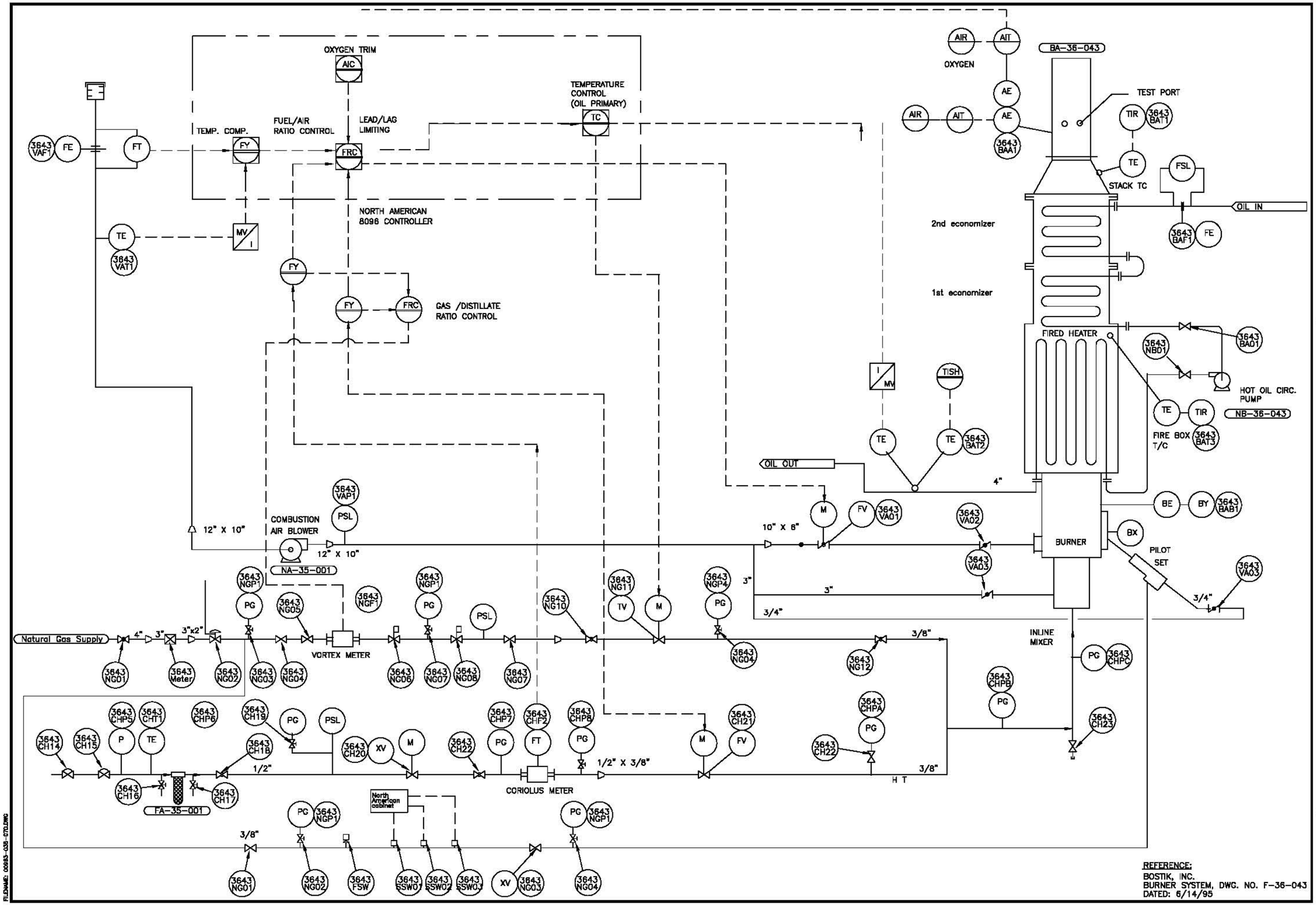

REFERENCE:
BOSTIK, INC.
BURNER SYSTEM, DWG. NO. F-36-043
DATED: 6/14/95

REVISIONS			
NO.:	DESCRIPTION:	DATE:	BY:

DESIGNED BY: X
DRAWN BY: K.P.B.
CHECKED BY: D.R.
APPROVED BY: X

ENSR | AECOM

ENSR CORPORATION
2 TECHNOLOGY PARK DRIVE
WESTFORD, MASSACHUSETTS 01886
PHONE: (978) 589-3000
FAX: (978) 589-3100
WEB: HTTP://WWW.ENSRAECOM.COM

BURNER SYSTEM
PIPING & INSTRUMENTATION DIAGRAM
BOSTIK, INC.
211 BOSTON STREET
MIDDLETON, MASSACHUSETTS

SCALE: NONE
DATE: 11/06
PROJECT NUMBER: 00963-035

FIGURE NUMBER: D-5

SHEET NUMBER: X

FILENAME: 00963-035-070.DWG

Figure D-6 Burner System Diagram

PLAN VIEW

ELEVATION

10 0 10 20
SCALE IN FEET
1" = 20'-0"

REVISIONS			
NO.:	DESCRIPTION:	DATE:	BY:

DESIGNED BY: X
DRAWN BY: K.P.B.
CHECKED BY: D.R.
APPROVED BY: X

ENSR | AECOM

ENSR CORPORATION
2 TECHNOLOGY PARK DRIVE
WESTFORD, MASSACHUSETTS 01886
PHONE: (978) 589-3000
FAX: (978) 589-3100
WEB: HTTP://WWW.ENSR.AECOM.COM

VAPOR TIE-IN ELEVATION & PLAN VIEW
BOSTIK, INC.
211 BOSTON STREET
MIDDLETON, MASSACHUSETTS

SCALE:	DATE:	PROJECT NUMBER:
1"=20'	11/06	00963-035

FIGURE NUMBER: D-6

SHEET NUMBER: X

FILENAME: 00963-035-06D.DWG

Figure D-7 Vapor Tie-In Elevation and Plan Views

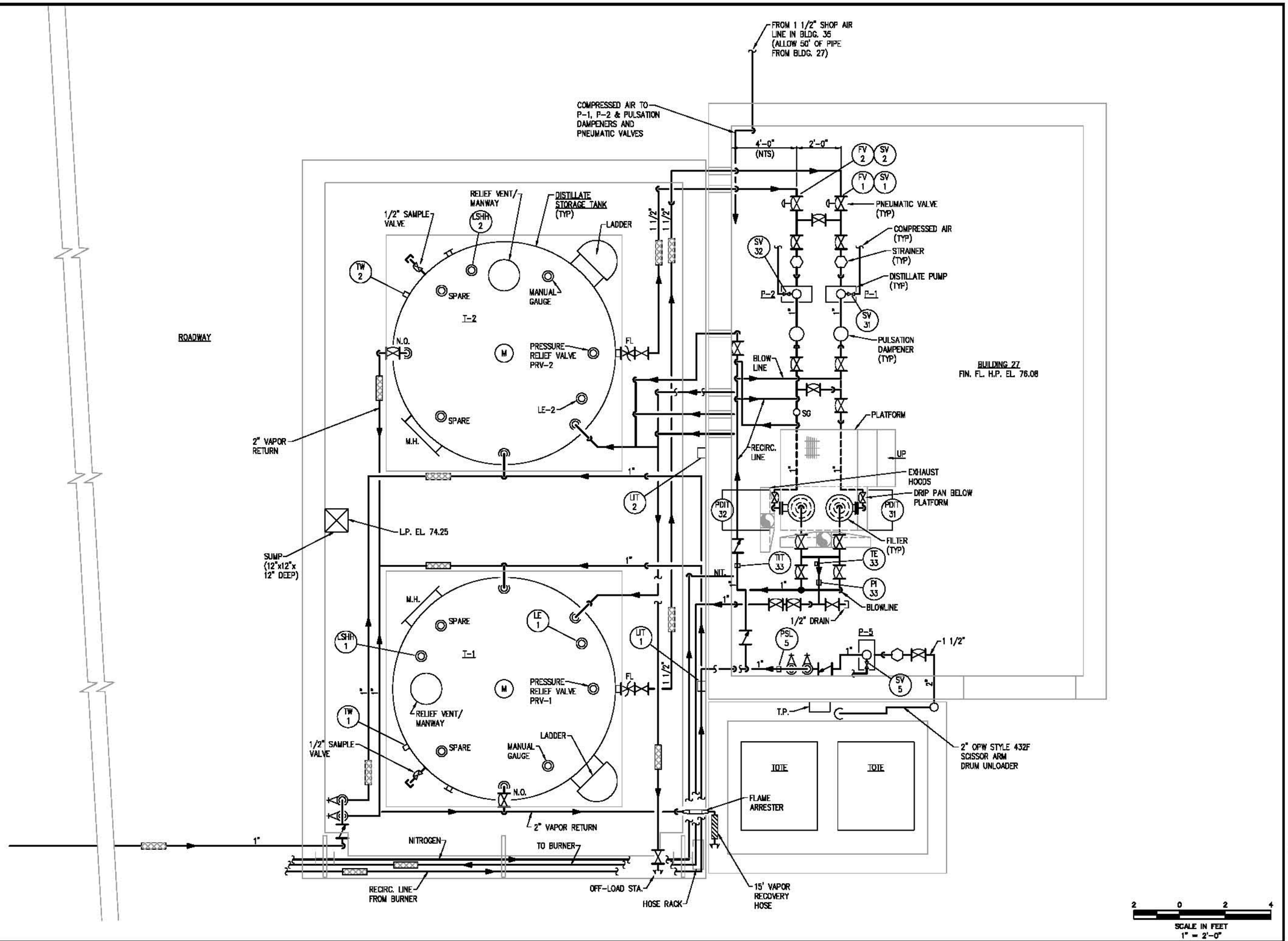

REVISIONS			
NO.:	DESCRIPTION:	DATE:	BY:

DESIGNED BY: X
DRAWN BY: K.P.B.
CHECKED BY: D.R.
APPROVED BY: X

ENSR | AECOM
ENSR CORPORATION
2 TECHNOLOGY PARK DRIVE
WESTFORD, MASSACHUSETTS 01886
PHONE: (978) 589-3000
FAX: (978) 589-3100
WEB: HTTP://WWW.ENSR.AECOM.COM

BLDG. 27 AND BLDG. 36 PLAN
BOSTIK, INC.
211 BOSTON STREET
MIDDLETON, MASSACHUSETTS

SCALE:	DATE:	PROJECT NUMBER:
1"=2'	11/06	00963-035

FIGURE NUMBER:
D-7

SHEET NUMBER:
1

FILENAME: 00963-035-V20.DWG

ATTACHMENT D-1

TANK CERTIFICATION REPORT

BOSTIK INTEROFFICE CORRESPONDENCE

DATE: July 25, 1995

TO: R. D. Murray

FROM: G. E. Bilger

SUBJECT: BIF Application
Storage Tank Integrity

COPIES: J. J. Noyer

As requested, attached is the statement with regard to the Distillate storage tanks integrity. Let me know if any additional documentation is required.

GEB

July 25, 1995

Assessment of Existing Tank System's Integrity

Three tanks are currently used to store hazardous waste distillate at Bostik's facility in Middleton, Massachusetts. The tanks are numbered 09518 which is a nominal 10,000 gallon capacity horizontal tank, known as the Direct Solvation Distillate Storage Tank. Tanks 27001 and 27002 are nominal 8800 gallon capacity vertical tanks, known as the Distillate Storage Tanks.

Design Standards:

Tank #09518 is fabricated in accordance with ASME pressure vessel code, Section VIII, Division I. It is a horizontal tank with dished heads rated for atmospheric service. The tank is fabricated from 304 stainless steel with the walls and heads both 3/16 inch thick. Attachment #1 provides the basic design for the tank.

Tank #27001 & #27002 are fabricated in accordance with U.L.142 Standard except that they have flat roofs. The tanks are vertical and rated for 1 psi. The tanks are fabricated from carbon steel with top, bottom, and walls all 5/16 inch thick. Attachment #2 gives the design specification for the tank. Attachment #3 is the vendor drawing. Attachment #4 is the vendor's statement on the design standard.

Waste Hazardous Characteristics:

The distillate product is classified as hazardous according to RCRA due to its flammability. Attachment #5 is the description of the waste product.

Tank Age:

Tank #09518 was fabricated in 1987 and installed in 1988. Tank #27001 & #27002 were fabricated and installed in 1992.

Tank Integrity:

The three tanks are all installed above ground in diked areas. Visual inspection indicates no sign of leakage.

On July 24, 1995 a tank wall thickness test was performed on all three tanks. Attachment #6 is the results of this test. This is the first thickness test performed on the tanks, as such, there is no basis to determine if any loss of wall thickness is occurring. However, all results are within expected tolerances for the original specified wall thickness.

Attachments:

#1	Tank #09518 Design
#2	Tank #27001 & #27002 Design Specification
#3	Tank #27001 & #27002 Vendor Design
#4	Tank #27001 & #27002 Statement of Compliance to U.L. 142
#5	Waste Characteristics
#6	Tank Wall Thickness Test Report

I certify under penalty of law that this document and all attachments were prepared under my direction or supervision in accordance with a system designed to assure that qualified personnel properly gather and evaluate the information submitted. Based on my inquiry of the person or persons directly responsible for gathering the information, the information submitted is, to be the best of my knowledge and belief, true, accurate, and complete. I am aware that there are significant penalties for submitting false information, including the possibility of fine or imprisonment for knowing violations.

G. Edward Bilger

G. Edward Bilger
Massachusetts Registration # 35348

NOZZLE SCHEDULE

MARK	SIZE	RTG/TYPE	SCH	REMARKS	SERVICE
[illegible]	2"	150# STUB END	40	SEE DETAIL (1)	
[illegible]	[illegible]	150# CLAD SO	10	" " (2)	
[illegible]	[illegible]	SPEC [illegible]	40	[illegible]	
[illegible]	[illegible]	3000# [illegible]		SEE DETAIL (6)	
[illegible]	3	150# STUB END	10	" " (5)	
[illegible]	3	150# STUB END	40	" " (4)	
[illegible]	3"	150# STUB END	40	" " (4)	
[illegible]	3"	150# STUB END	40	" " (3)	
[illegible]	[illegible]	150# STUB END	40	" " (1)	
[illegible]	[illegible]	150# CLAD SO	10	[illegible] PL 3/16 " " (7)	
[illegible]	2	150# STUB END	40	" " (1)	
[illegible]	2	150# WELD NECK	40	" " (9)	

* Indicates Nozzle to be Supplied with Blind Cover, Bolts, Nuts and Gasket

DESIGN DATA

	Main Vessel	Jacket/Coil
Design Pressure	ATMOSPHERIC PSIG	PSIG
Design Temperature	AMBIENT F.	F.
Hydro Test Pressure	PSIG	PSIG
Radiographic Examination		
Stress Relieve		
Specific Gravity of Contents		
Spec. Heads Joint Efficiency	% %	% %
Corrosion Allowance		

FABRICATION

Fabrication in Accordance with the Latest ASME Pressure Vessel Code, Section VIII, Division 1

ASME Code Stamp | YES | ✓ | NO

Specifications Other

Welding Procedures

Carbon Steel

Alloy

Inside Weld Finish

Outside Weld Finish

Other

Cleaning and Painting:

Sandblast Wire Brush: TO CLEAN

Paint Exterior: CS RED OXIDE Passivate:

Paint Interior Other:

Inspection:

Nationwide Fabricators, Inc. Quality Control

Authorized ASME Inspection:

Direct

Name Plate Tag Equip.:

MATERIALS

Description	Main Vessel	Jacket/Coil	Description	Misc.
Shell	304 S/S		Body Flanges	
Heads	304 S/S		Stiffening Rings	
Lining/Cladding	304 S/S		Closure Bar	
Nozzle Necks	304 S/S		Baffles/Internals	
Nozzle Flanges	AS NOTED		External Clips	
Manway Neck	304 S/S		Wear Plates	
Manway Flange	AS NOTED		Supports	A-36
Manway Cover	AS NOTED		Reinforcing Pads	304
Studding Pads			Lifting Lugs	A-36
Couplings	304 S/S			
Studs	A-307			
Nuts	A-307			
Gaskets	GORE-TEX			

WEIGHTS

Nom. Capacity Gals. | Full Capacity 10,770 Gals.

Empty Weight 7080 LBS Lbs. | Weight Full H_2O 89,887 Lbs.

NOTES

1. All Bolt Holes to Straddle Vessel Nat. Centerlines unless Noted Otherwise.
2. All Flanges to have Std. Gasket Surface Finish unless Noted Otherwise.
3. All Openings to be Weather Protected for Shipment.
4. All Vessels shall be Free of Excessive Weld Spatter, Mill Scale, etc.

DRAWING DISTRIB	APPVL	FINAL
Customer		
Shop		
File		
Shipping		
QC		
Mfg		
Purch		
Sales		
Field		

Steel-Pro Incorporated

660 Rear Main Street • P.O. Box 449 • Rockland, Maine 04841

ITEM

DISTILLATE TANK T-9

CUST. BOSTIK | P.O. NO.

Dwn P GAGNON | S. O. No. 5451 | QUAN 1

Chkd [illegible] | DWG: M-0116 | Rev. B

Date 10/26/87

ATTACHMENT .. #1

TANK # 09518

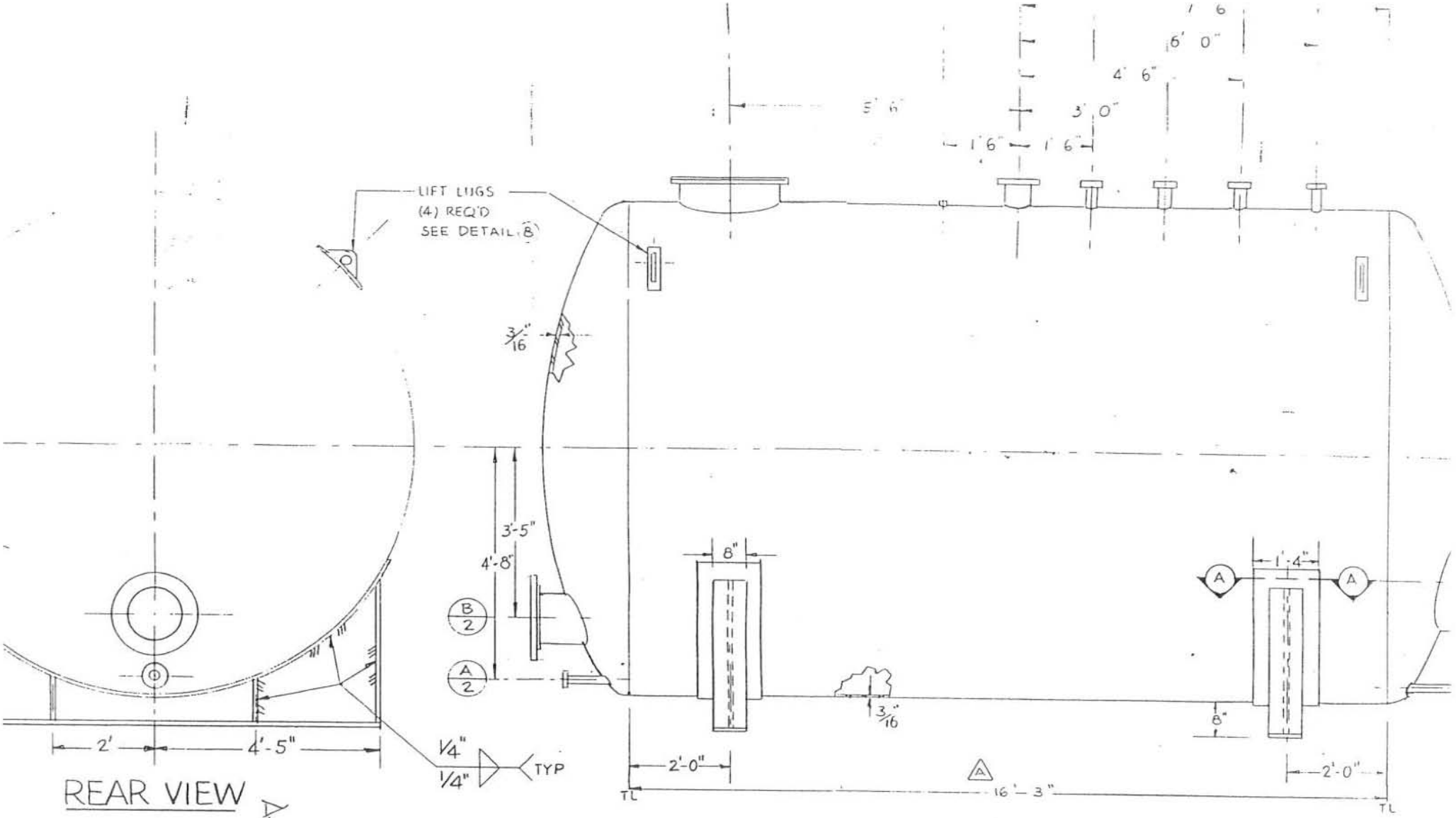

REAR VIEW

SIDE VIEW

SCALE: 1/2" = 1'-0"

ATTACHMENT #1

Amoniator #2 Tank #27001

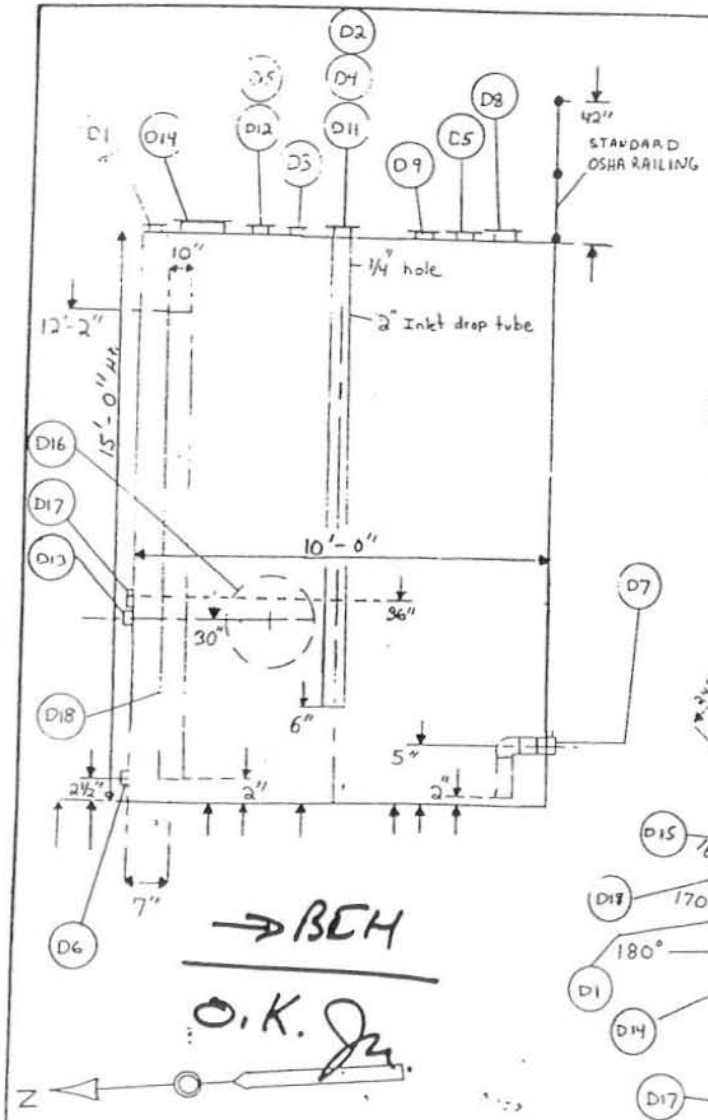

CONT. IDENT.	SIZE	ANSI RATING	SERVICE	REMARKS	NO. REQ'D.
D1	6"	150#	LSH Probe	Float Switch	
D2	[illegible]	[illegible]	INLET	Drop Tube	
D3	4"	"	Level Indicator	Rubber Tank	
D4	[illegible]	150#	Mixer		
D5	2"	3000#	Recirc. Inlet		
D6	2"		Drain	w/Flange	
D7	2"		Outlet	w/NPT Nipple + Elbow	
D8	2"	"	PRV	Conservation Vent	
D9	2"	"	Manual Gauge		
D10			Access Ladder		
D11	2"	3000#	Vapor Recov		
D12	2"	"	Spare	w/Plug	
D13	1/2"	"	Sample Port		
D14	24"		Emerg Vent/Manhole		
D15	2"	3000#	Spare	w/plug	
D16	24"		Manway	Cleanout	
D17	1"	3000#	TW/TI	Temperature Ind.	
D18	10" width, 2" off wall		Baffle, Typ. of (4)	2" off bottom, 12'-0" Ht.	4

10/2" 1/6" Flange Cap 1/10" Flange Cap 1/1½ 1/1" 1

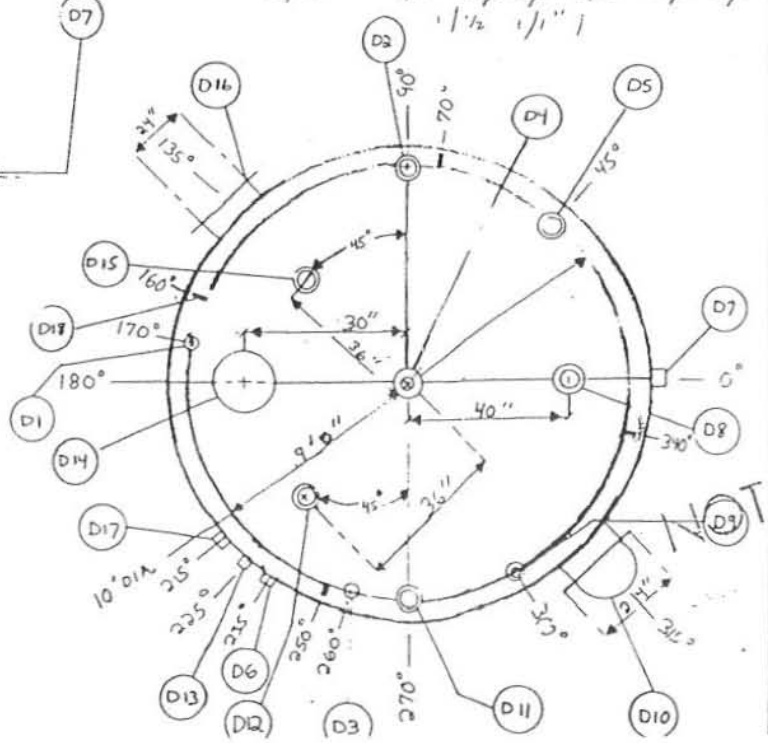

TANK DATA

NO.	ITEM Tag No:	T-1
	REQUIRED	1
PRESS	DESIGN	1 PSI
	OPERATING	Atmospheric
	TEST	UL 142 or API 650 1.5 PSI
TEMP.	DESIGN	Ambient
	OPERATING	Ambient
SHELL	INSIDE (DIAM/WIDTH)	10'-0"
	~~LENGTH~~/HEIGHT	15'-0"
	THICKNESS	Per Test
	CORR. ALLOW INCL.	1/16"
HEAD(S)	TYPE	Flat
	MIN. THICKNESS	1/4"
CONN'S.	MANHOLE RATING	
	MANHOLE DAVIT OR HINGE*	Flange
	NOZZLE RATING	150# flg / 3000# Full Coupling
	CONSTRUCTION	C.S.
MATERIALS	SHELL AND HEADS	
	PARTITIONS/WEIRS	4) baffles, 70°, 160°, 250°, 270°
	~~OTHER INTERNALS~~	2" off wall, 10" wide
	~~INTERNAL BOLTING~~	2" off Tank bottom, 12'-0" high
	~~EXTERNAL BOLTING~~	(Typ of 4)
	EXTERNAL GASKETS	Teflon
	SUPPORTS	AS Req'd.
DESIGN & CONSTR.	M & E SPECIFICATION	
	PAINTING	Red Oxide Primer
	INSULATION	
	SHIPMENT	

NO.	DATE	DESCRIPTION	BY

REVISIONS

BOSTIK

BIF SYSTEM UPGRADE, BFN27

FOR CONSTRUCTION

DISTILLATE STORAGE TANK

T-1

DRAWN S. THIBAULT

SCALE (Dwg NOT TO Scale)

JOB NO.

DRAWING NO. REV.

MAY - 4 1992

METCALF & EDDY/ENGINEERS

BFN 27

MAY - 4 1992

Attachment #2, Tank #7002

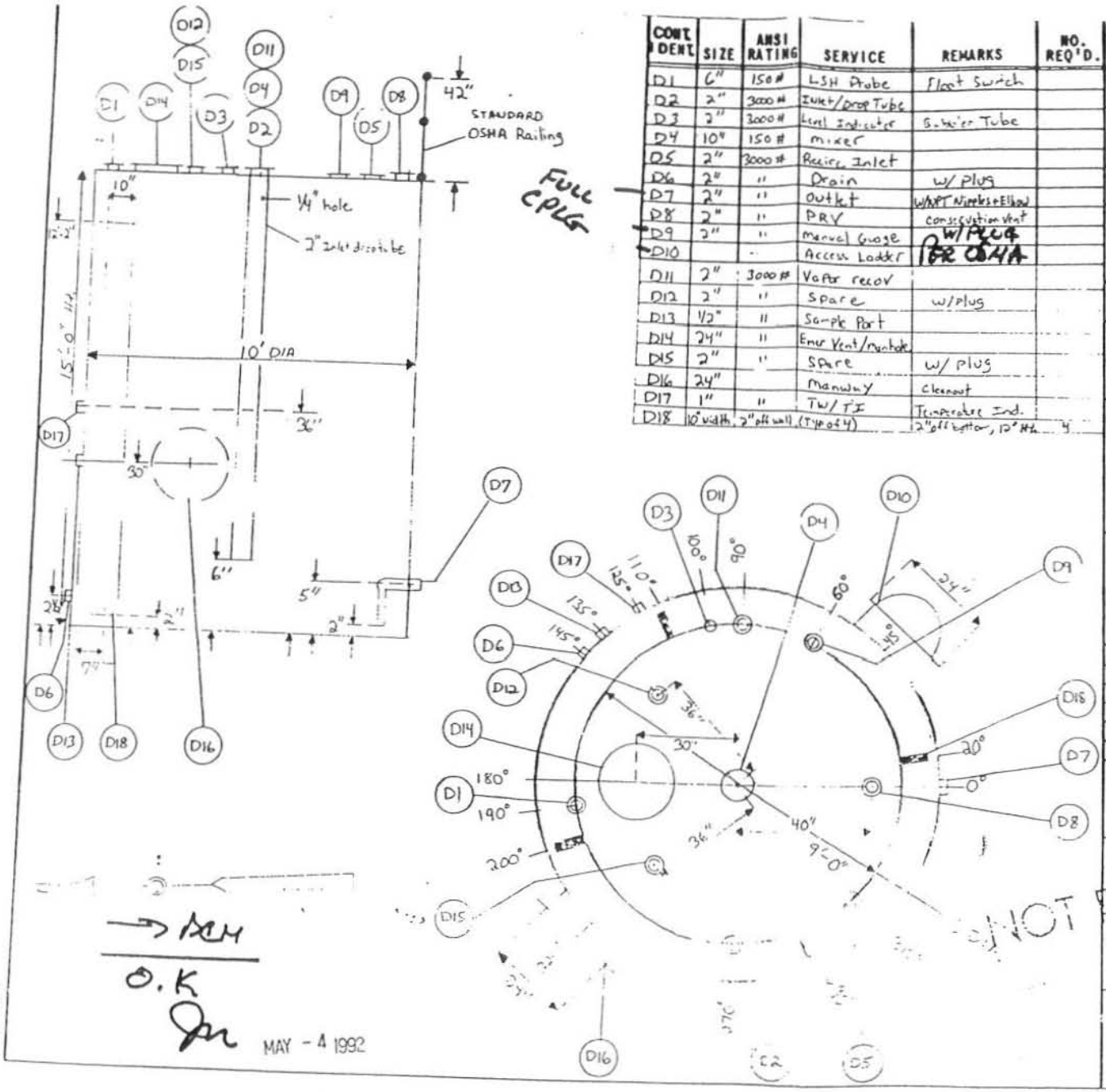

CONN IDENT	SIZE	ANSI RATING	SERVICE	REMARKS	NO. REQ'D.
D1	6"	150#	LSH Probe	Float Switch	
D2	2"	3000#	Inlet/drop Tube		
D3	2"	3000#	Level Indicator	Gauger Tube	
D4	10"	150#	mixer		
D5	2"	3000#	Recirc. Inlet		
D6	2"	"	Drain	w/ plug	
D7	2"	"	Outlet	W/APT Nipples + Elbow	
D8	2"	"	PRV	conservation vent	
D9	2"	"	Manual Gauge	W/PLUG	
D10		"	Access Ladder	PER OSHA	
D11	2"	3000#	Vapor recov		
D12	2"	"	Spare	w/plug	
D13	1/2"	"	Sample Port		
D14	24"	"	Emer Vent/manhole		
D15	2"	"	Spare	w/ plug	
D16	24"		Manway	Cleanout	
D17	1"	"	TW/TI	Temperature Ind.	
D18	10" width, 2" off wall (Typ of 4)			2" off bottom, 12" Ht.	4

FULL CPLG

TANK DATA

NO.	ITEM Tag No:	T-2
	REQUIRED	1
PRESS	DESIGN	1 PSI
	OPERATING	Atmospheric
	TEST	UL 142 or API 650 15 PSI
TEMP.	DESIGN	Ambient
	OPERATING	Ambient
SHELL	INSIDE (DIAM/WIDTH)	10'-0"
	LENGTH/HEIGHT	15'-0"
	THICKNESS	Per test
	CORR. ALLOW INCL.	1/16"
HEAD(S)	TYPE	Flat
	MIN. THICKNESS	1/4"
CONN'S.	MANHOLE RATING	
	MANHOLE DAVIT OR HINGE	Flange
	NOZZLE RATING	150# Flange / 3000# Full Coupling
	CONSTRUCTION	C.S.
MATERIALS	SHELL AND HEADS	
	PARTITIONS/WEIRS	(4) baffles, 20°, 110°, 200°, 290°
	~~OTHER INTERNALS~~	2" off wall, 10" wide
	~~INTERNAL BOLTING~~	2" off tank bottom, 12'-0" ht
	~~EXTERNAL BOLTING~~	(Typ of 4)
	EXTERNAL GASKETS	Teflon
	SUPPORTS	As Req'd
DESIGN & CONSTR.	M & E SPECIFICATION	
	PAINTING	Red Oxide Primer
	INSULATION	
	SHIPMENT	

NO.	DATE	DESCRIPTION	BY

REVISIONS

BOSTIK

BIF SYSTEM UPGRADE BFN27

DISTILLATES STORAGE TANK

T-2

Drawn S. THIBAULT

SCALE (UNLESS NOT TO SCALE)

JOB NO.

DRAWING NO.

REV.

MAY - 4 1992

METCALF & EDDY/ENGINEERS

BFN27

→ RCM

O.K

MAY - 4 1992

Attachment #3

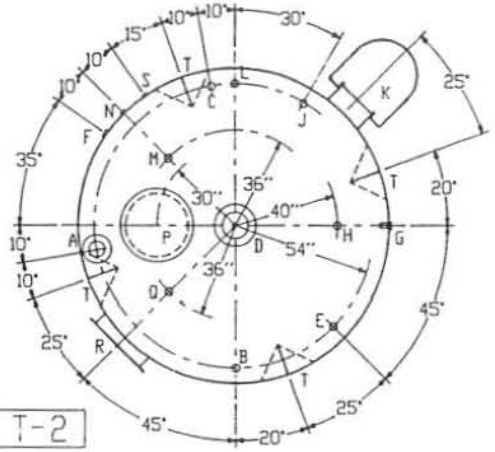

CAP- 8800 GAL [2] TANKS REQUIRED
MAT'L- MILD CARBON STEEL
THICKNESS- TOP- 5/16" FLAT FLANGED
BOTTOM- 5/16" FLAT PLATE
SHELL- 5/16"
CONSTR- LAP WELD OUTSIDE ONLY
TEST- 2 PSIG
PAINT- INT- NONE
EXT- RED OXIDE PRIMER
LABEL- NONE

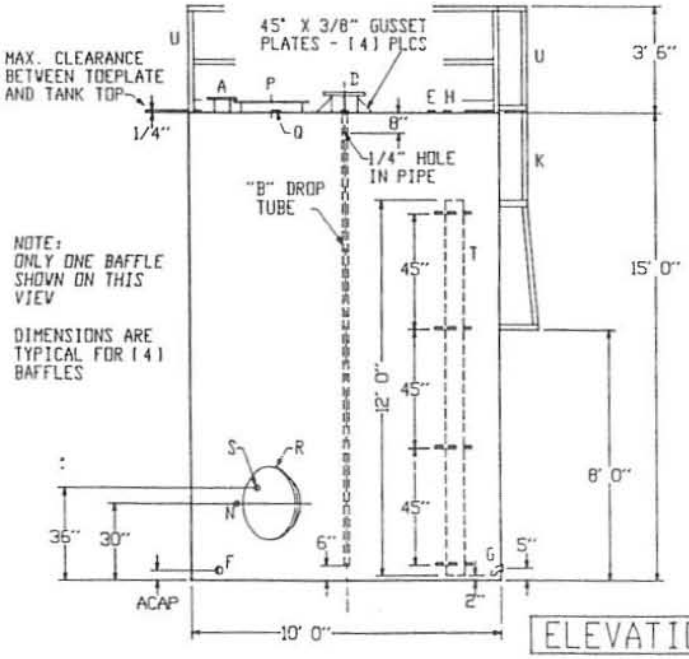

- ✓ A 6" X 150# FLG WITH BLIND FLANGE
- B 2" X 3000# FCPLG WITH 2" DROP PIPE [T.O.E.]
- C 2" X 3000# HCPLG
- ✓ D 10" X 150# FLG - NECK TO HAVE [4] 45° GUSSETS
- E 2" X 3000# HCPLG
- F 2" X 3000# HCPLG WITH PLUG
- ✓ G 2" X 3000# FCPLG WITH 2" X 90° LR THRD ELBOW
- H 2" X 3000# HCPLG
- J 2" X 3000# HCPLG WITH PLUG
- ✓ K OSHA LADDER AND CAGE PER DWG C17170
- L 2" X 3000# HCPLG
- ✓ M 2" X 3000# HCPLG WITH PLUG
- ✓ N 1/2" X 3000# HCPLG
- ✓ P 24" X 1/4" PLATE LOOSE BOLT MANHOLE WITH TEFLON GASKET
- ✓ Q 2" X 3000# HCPLG WITH PLUG
- ✓ R 24" X 1/4" PLATE MANHOLE WITH TEFLON GASKET
- ✓ S 1" X 3000# HCPLG
- ✓ T 10" WIDE X 1/4" PLATE BAFFLES - TYP [4] PLCS SEE BAFFLE DETAIL
- ✓ U OSHA HANDRAIL AROUND TOP L2 X 2 X 3/8" POSTS AND RAILS AND 4" X 1/4" TOEPLATE SHIP UNIT LOOSE

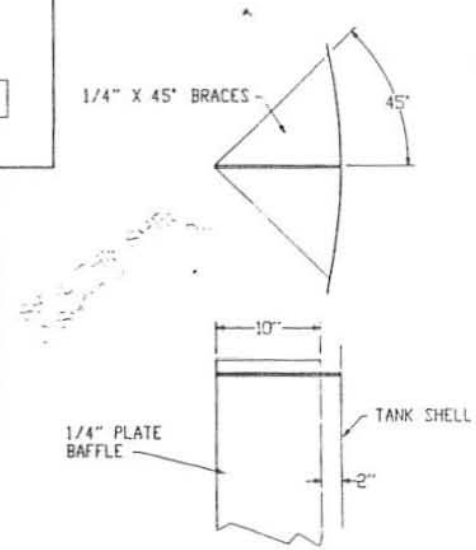

BAFFLE DETAIL
SCALE 1" = 1'-0"

ALL RIGHTS RESERVED. THIS DRAWING OR ANY PART THEREOF MUST NOT BE REPRODUCED IN ANY FORM WITHOUT THE WRITTEN PERMISSION OF HIGHLAND TANK AND MFG CO

8800 GAL AG VERTICALS
HIGHLAND TANK AND MFG CO

CUSTOMER		REV DATE	REV NO
ZECCO		5/21/92	1
SCALE	DATE	DRAWN BY	DWG NO
1/4"= 1'-0"	5/18/92	TJA	C19569

HIGHLAND TANK & MFG. CO.
99 WEST ELIZABETHTOWN ROAD • MANHEIM, PA 17545-9410 • TELEPHONE 717-665-6877
FAX 717-665-2790

July 16, 1992

Mr. Howard Steiman
Metcalf and Eddy
30 Harvard Mill Square
Wakefield, MA 01888

RE: Zecco Purchase Order #16805 (Bostik)

Dear Mr. Steiman:

The two 8,800 gallon vertical tanks provided by Highland Tank & Mfg. Company do not bear a U.L. 142 label. The fact that these tanks have flat tops prevents them from fully meeting the U.L. 142 Standard. In all other aspects, however, (weld design, testing, venting capacity, material thickness, etc.), these tanks meet the U.L. specifications.

Highland Tank & Mfg. Company understands that a flat roof was specified by Metcalf and Eddy due to personnel access requirements to equipment located at the top of the tank.

Sincerely,

Timothy J. Silva (MK)

Timothy J. Silva
Regional Sales Manager

TJS:mk

cc Jeff Bridgeman - Zecco
Charles E. Aument
File

1.2 DISTILLATE DESCRIPTION

According to Bostik, the distillate waste has the following characteristics:

1. Composition - the "average" distillate composition is:

Methanol	39%
Water	40
Tetrahydrofuran, THF	9
1,4 Butanediol	6
Ethylene Glycol	2
Xylene	2
Caprolactone	2
Total:	100%

2. The distillate is classified as a hazardous waste only because it is flammable.

3. The heating value of the distillate is 44-55,000 Btu/gallon.

4. The elemental composition of the distillate is:

Carbon	33.8%
Hydrogen	13.1%
Oxygen	53.1%
Halogenated Compounds	None
Heavy Metals	None
Sulfur	None
Nitrogen	Nil

Based upon Bostik's description of the distillate, M&E has assumed that it is a Class 1B Liquid as defined by NFPA standards. Therefore, the applicable provisions of NFPA 30 for a Class 1B flammable fluid have been incorporated into the system design basis.

BAKER TESTING SERVICES, INC.

OFFICE AND LABORATORIES:
98 Reservoir Park Drive
Rockland, MA 02370

NONDESTRUCTIVE EXAMINATION
METALLURGY AND FAILURE ANALYSIS

(TEL) 617-871-4458
(FAX) 617-871-0123

NON-DESTRUCTIVE TEST REPORT

Customer Bostik Job No. 0795-103

P.O. 122532 Inspection Date 7-24-95

Test Method Ultrasonics Type Thickness Readings

Test Equipment Panametrics Model 26 DL Plus

Part Name Storage Tanks Part No. Quantity 3

Part Identification 27001, 27002, 09518 Material Carbon Steel / Stainless Steel

Specification Customer Information Acceptance Standard Customer Information

Test Data Transducer - 5 Mhz .312" dia. dual element

Calibration - Stepwedges

Couplant - Sonotrace Grade #30

Row A girth band, Row B bottom to top at ladder

Row C & D top X pattern, bottoms inaccessible,

On tanks 27001 and 27002. See drawing for tank 09518

Results

See Attached Sheets

Inspector James S. Doyle Level III Date 7-24-95

JM-1602

UT THICHNESS READING LOCATIONS
BOSTIK TANK#09518

INSULATION WAS REMOVED AT 7 LOCATIONS.

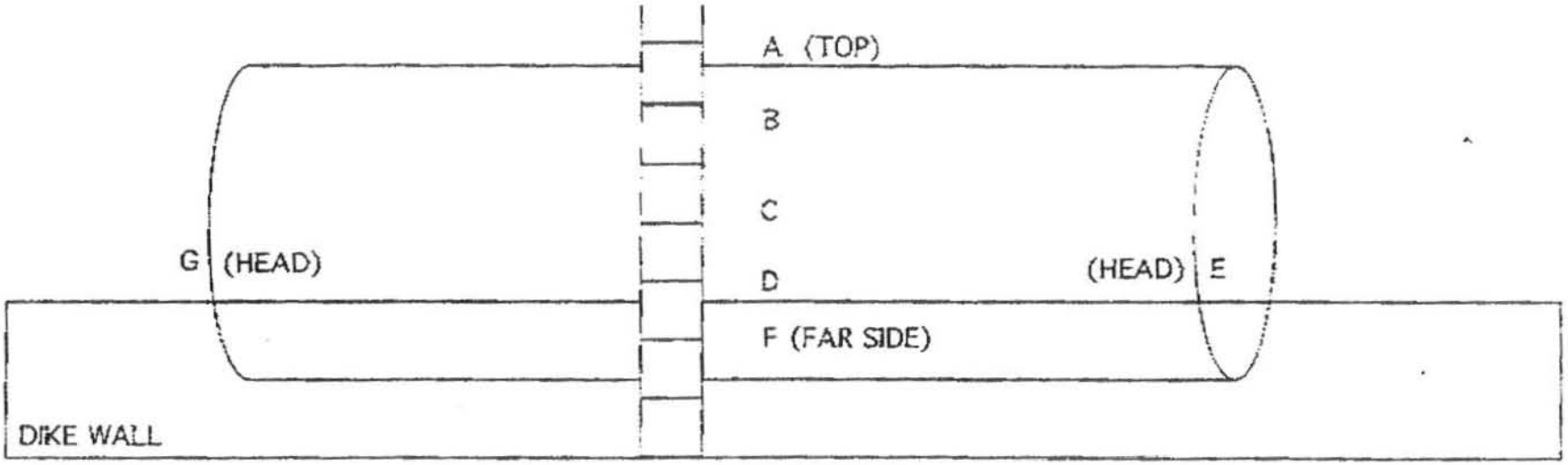

Filename: BOSTIK.TXT
Operator: JAMES DOYLE
Location: BOSTIK
Date: 7/25/1995
Time: 07:24
Probe ID: D790/791 for SU# 2
Probe ID: D790/791 for SU# 5
Comments:

IDENTIFIER	THICKNESS	UNITS	FLAGS	SU #
27001-A01	0.324	IN	M-----A	2
27001-A02	0.332	IN	M-----	2
27001-A03	0.333	IN	M-----	2
27001-A04	0.322	IN	M-----	2
27001-A05	0.328	IN	M-----	2
27001-A06	0.329	IN	M-----	2
27001-A07	0.326	IN	M-----	2
27001-A08	0.331	IN	M-----	2
27001-A09	0.325	IN	M-----	2
27001-A10	0.332	IN	M-----	2
27001-B01	0.330	IN	M-----	2
27001-B02	0.325	IN	M-----	2
27001-B03	0.329	IN	M-----	2
27001-B04	0.334	IN	M-----	2
27001-B05	0.330	IN	M-----	2
27001-B06	0.331	IN	M-----	2
27001-B07	0.331	IN	M-----	2
27001-B08	0.343	IN	M-----	2
27001-B09	0.339	IN	M-----	2
27001-B10	0.345	IN	M-----	2
27001-C01	0.330	IN	M-----	2
27001-C02	0.335	IN	M-----	2
27001-C03	0.337	IN	M-----	2
27001-C04	0.329	IN	M-----	2
27001-C05	0.329	IN	M-----	2
27001-C06	0.321	IN	M-----	2
27001-C07	0.327	IN	M-----	2
27001-C08	0.327	IN	M-----	2
27001-C09	0.325	IN	M-----	2
27001-C10	0.326	IN	M-----	2
27001-D01	0.331	IN	M-----	2
27001-D02	0.326	IN	M-----	2
27001-D03	0.323	IN	M-----	2
27001-D04	0.321	IN	M-----	2
27001-D05	0.339	IN	M-----	2
27001-D06	0.326	IN	M-----	2
27001-D07	0.330	IN	M-----	2
27001-D08	0.332	IN	M-----	2
27001-D09	0.346	IN	M-----	2
27001-D10	0.343	IN	M-----	2
27002-A01	0.327	IN	M----A	2
27002-A02	0.332	IN	M-----	2
27002-A03	0.328	IN	M-----	2
27002-A04	0.330	IN	M-----	2
27002-A05	0.332	IN	M-----	2
27002-A06	0.327	IN	M-----	2
27002-A07	0.332	IN	M-----	2
27002-A08	0.323	IN	M-----	2
27002-A09	0.326	IN	M-----	2

27002-B01	0.328	IN	M------	2
27002-B02	0.322	IN	M------	2
27002-B03	0.321	IN	M------	2
27002-B04	0.331	IN	M------	2
27002-B05	0.333	IN	M------	2
27002-B06	0.334	IN	M------	2
27002-B07	0.336	IN	M------	2
27002-B08	0.336	IN	M------	2
27002-B09	0.334	IN	M------	2
27002-B10	0.324	IN	M------	2
27002-C01	0.314	IN	M------	2
27002-C02	0.309	IN	M------	2
27002-C03	0.319	IN	M------	2
27002-C04	0.324	IN	M------	2
27002-C05	0.327	IN	M------	2
27002-C06	0.330	IN	M------	2
27002-C07	0.343	IN	M------	2
27002-C08	0.321	IN	M------	2
27002-C09	0.322	IN	M------	2
27002-C10	0.317	IN	M------	2
27002-D01	0.330	IN	M------	2
27002-D02	0.322	IN	M------	2
27002-D03	0.316	IN	M------	2
27002-D04	0.322	IN	M------	2
27002-D05	0.336	IN	M------	2
27002-D06	0.319	IN	M------	2
27002-D07	0.324	IN	M------	2
27002-D08	0.321	IN	M------	2
27002-D09	0.327	IN	M------	2
27002-D10	0.330	IN	M------	2
09518A	0.182	IN	M------	5
09518B	0.185	IN	M------	5
09518C	0.191	IN	M------	5
09518D	0.191	IN	M------	5
09518E	0.183	IN	M------	5
09518F	0.190	IN	M------	5
09518G	0.181	IN	M------	5

OK

SU #	VEL(/uS)	DIFF	LO-ALM	HI-ALM	EXT-BLANK	UNITS	TRANSDUCER	GAIN dB
2	0.2371	0.000	0.000	10.000	0.000	IN	D790/791	53
5	0.2253	0.000	0.000	10.000	0.000	IN	D790/791	53

OK

CODE	COMMENT
A	MANWAY

OK

Section E - Groundwater Monitoring

Bostik, Inc.'s Middleton, MA facility does not operate a surface impoundment, waste pile, landfill, or land treatment unit that received hazardous waste after July 26, 1982; therefore, the additional informational requirements of 40 CFR Part 270.14(c) are not applicable to this permit application.

Section F - Procedures to Prevent Hazards

F.1 Security [40 CFR 270.14(b)(4); 264.14]

The Bostik facility has a 24 hour surveillance system and a means to control entry to the site. The surveillance system includes 24-hour video monitoring of the front gate (adjacent to Building # 3) Bostik polyester department personnel work rotating 12 hour shifts and are therefore present to perform an inspection of the BIF operation at all times. The Bostik facility has a chain-link fence that completely surrounds the property and there are gates at each vehicle entrance which are closed and locked during non-operation hours.

The Direct Solvation Tank, the storage/feed tanks (T-1 and T-2), and the Polyester Burner each have signs posted with the legend, "Danger - Unauthorized Personnel Keep Out", that can be seen from any approach to these units. The fencing along the roadways and on the western perimeter of the property also have warning signs. The legends of these signs are written in English and are legible from a distance of at least 25 feet.

F.2 Inspection Schedule [40 CFR 270.14(b)(4); 264.14]

F.2.1 General Inspection Requirements

The Bostik facility maintains a schedule for inspection of monitoring equipment, safety and emergency equipment, security devices, and operating and structural equipment that are vital to prevent, detect, or respond to environmental or human health hazards. The inspection schedule identifies the types of problems to look for and the frequency of inspection. The frequency of inspection is based on the rate of possible deterioration of equipment and the probability of an environmental or human health incident if the deterioration, malfunction, or operator error goes undetected between inspections. Areas subject to potential spills and major features of the facility (such as dikes, storage conditions, application rates, and general site appearance) will be inspected daily when in use. This inspection schedule will be kept at the facility and is summarized as follows:

<u>Inspection of Fire Alarms and Suppression Equipment:</u>

- Fire Blankets - Monthly inspection by the Loss Prevention Coordinator for accessibility and condition.
- Fire Doors - Monthly inspection by the Loss Prevention Coordinator for accessibility and condition of door, rope, fusible links, trolleys and racks. Annual inspection by Fire Equipment Inc.
- Fire Extinguishers - Monthly inspection by the Loss Prevention Coordinator for accessibility and condition. Annual inspection by Fire Equipment Inc.
- Fire Alarm and Pull Stations - Bi-weekly inspection by the Department Safety Coordinator for accessibility and condition. Annual inspection by Fire Equipment Inc.

- Fire Pumps, Hydrants, Sprinklers, Sprinkler Riser Valves and Post Indicator Valves – Bi-weekly inspection by the Loss Prevention Coordinator for accessibility and condition. Annual inspection by Swiss RE (formerly GE GAP). A quarterly Sprinkler Water Flow Alarm test and a monthly Fire Pump test are also conducted by the Loss Prevention Coordinator.

- Solvent Tank Farm Unloading Station, Foam Fire Suppression System and Computer Room Halon Fire Suppression System – Bi-weekly inspection by the Loss Prevention Coordinator for accessibility and condition. Annual inspection by Fire Equipment Inc.

Inspection of First Aid Equipment:

- First Aid Stations – Bi-weekly inspection by department Safety Coordinator for accessibility and condition. Monthly inspection and restocking by Safety Inc.

- Eye Wash Stations – Bi-weekly inspection by department Safety Coordinator for accessibility and condition. Self-contained eye wash stations are inspected and recharged as needed by Safety Inc. Piped eye wash stations are tested annually by Triumvirate Environmental.

- Emergency Showers – Weekly inspection by department Safety Coordinator for accessibility and condition. Emergency showers are tested annually by Triumvirate Environmental.

Inspection of Safety Stations:

- Lockout / Tagout Stations – Bi-weekly inspection by department Safety coordinator for accessibility and condition.

- Right-to-Know Stations – Bi-weekly inspection by department Safety Coordinator for accessibility and condition.

- Confined Space Rescue Station – Bi-weekly inspection by department Safety Coordinator for accessibility and condition.

Inspection of Security Equipment:

- Security System – The system is self-testing. Annual reviews by Security Coordinator.

An emergency response trailer (stationed adjacent to Building #17) and a spill control supply room (Building #17) are inspected monthly by Safety Inc.

F.2.2 Specific Process Inspection Requirements

F.2.2.1 Container Inspection

The Bostik facility does not store hazardous waste in containers for greater than 90 days; therefore, this section is not applicable.

F.2.2.2 Tank System Inspection

Three aboveground tank systems are subject to inspection under this section: T-9 (10,000 gallon); T-1 (8,800 gallon); and T-2 (8,800 gallon). **Figure F-1** shows the daily inspection form that will be completed by trained Bostik personnel. The inspector will check each tank system, looking for external corrosion or releases of waste. The inspector will check the construction materials and the area immediately surrounding the externally accessible portions of the tank systems, including the secondary containment systems, daily to detect erosion or signs of releases of hazardous waste (e.g., wet spots, dead vegetation, etc.). The levels indicated for each tank will be recorded on the inspection form.

F.2.2.3 Waste Pile Inspection

The Bostik facility does not manage hazardous waste in waste piles; therefore, this section is not applicable.

F.2.2.4 Surface Impoundment Inspection

The Bostik facility does not manage hazardous waste in surface impoundments; therefore, this section is not applicable.

F.2.2.5 Incinerator Inspection

The Bostik facility does not manage hazardous waste in an incinerator; therefore, this section is not applicable.

F.2.2.6 Landfill Inspection

The Bostik facility does not manage hazardous waste in a landfill; therefore, this section is not applicable.

F.2.2.7 Land Treatment Facility Inspection

The Bostik facility does not manage hazardous waste in a land treatment facility; therefore, this section is not applicable.

F.2.2.8 Miscellaneous Unit Inspections

The Bostik facility does not manage hazardous waste in any miscellaneous units as specified in 40 CFR 264.602; therefore, this section is not applicable.

F.2.2.9 Boilers and Industrial Furnaces (BIF) Inspections

The Struthers-Wells polyester burner will be subject to thorough visual inspections at least daily (during days of operation and when the unit contains hazardous waste) for signs of leaks, spills, fugitive emissions, and tampering. The inspector will complete the daily BIF inspection form (see Figure F-1) including the following areas:

- Burning distillate;
- Flows;
- Totalizers;
- Containment areas (diked areas);
- Monitoring equipment to include measuring devices and overflow protection devices;
- Rain water collection basins and freeboard levels of both diking and storage facilities;
- Stack plume (observing color and opacity); and
- All industrial equipment which relates to the combustion of hazardous waste and associated equipment such as pumps, filters, etc., including testing of the automatic waste cut-off system to ensure its proper operation.

Figure F-2 shows the daily inspection form to ensure the proper operation of the Continuous Emissions Monitoring (CEM) system for the polyester burner. The inspector will review the Envicom Plus computer screen and complete all questions on the form utilizing the information from the computer screen. The inspector will verify that the date and time are correct and check the printer paper (and refill if needed). The inspector will open the analyzer control cabinet and inspect the following:

- sample line;
- gas cylinder pressure;
- sample pressure;
- chiller cooling; and
- flow meter settings.

The inspector will review the hourly rolling average (HRA) carbon monoxide (CO) printout sheets and note the cause. The inspector will review the daily log book and record in the reason block any activity that took place to affect the CO average. The inspector will notify management of any unusual conditions and record the information in the daily log book. The inspector will file completed forms and computer printouts in the master file cabinet located in the BIF control room.

In accordance with the BIF regulations, an automatic waste feed cutoff (AWFCO) system has been installed on the polyester burner and has been operational since mid-1992. Parameters tied into the waste feed cutoff system include:

- selected CEM system failure;
- high heater firing rate;
- high waste feed rate to the heater;
- high CO hourly rolling average; or
- data collection system is down.

Activating any of these triggers causes the control valves on the waste feed system to close. Additionally, a number of other alarms and sensors are in place to monitor heater operations. **Table F-1** indicates the setpoints for each of the alarm, shutdown, warning, and waste feed cutoff designations. These shutdown alarms are part of the overall burner management system and are designed to ensure proper and safe heater operation.

The BIF regulations require that the HRA CO emissions never exceed 100 ppm. If the CO HRA exceeds 100 ppm, the distillate feed will be shut off and the condition which resulted in the high CO level corrected before any more distillate is fired into the burner. The Programmable Logic Controller (PLC) computer will be alerted if the one-minute traveling average CO level exceeds 75 ppm and will alarm if the level exceeds 100 ppm. The PLC is programmed to shut down the firing of distillate if the CO reading is above 100 ppm on a rolling hourly average.

The BIF rules call for testing of the AWFCO system every seven days. The system undergoes this testing manually to fulfill this regulatory requirement. A demonstration of the AWFCO system test will be included during implementation of the Trial Burn.

There is a manual emergency shutdown button in the North American 8096 controller panel which is wired to the PLC. Emergency buttons in several locations are also received by the PLC. These four buttons, located at the CEM Building, the Day Tank, T1 & T2, and Building 27, shutdown the entire system, including the Polyester Burner.

Hazardous waste will not be transferred from a transport vehicle (or container) to the boiler.

F.2.2.10 Containment Building Inspection

The Bostik facility does not manage hazardous waste in a containment building; therefore, this section is not applicable.

F.3 Waiver or Documentation of Preparedness and Prevention Requirements [40 CFR 270.14(b)(6); 264.32(a)-(d)]

F.3.1 Equipment Requirements

F.3.1.1 Internal Communications

The Bostik facility uses internal communications and an alarm system to provide immediate emergency instruction (voice and signal) to facility personnel. Facility personnel will utilize Nextel Phones or telephones located near each hazardous waste unit to communicate with internal response personnel. Alarm pull boxes will also be used in emergency situations to notify the plant personnel to evacuate in accordance with the Contingency Plan (see Section G). In-plant alarm pull boxes are electrically connected to the fire department and the enunciator panel is on the external wall of the Boiler Room (Building # 3).

F.3.1.2 External Communications

The hazardous waste units have telephones immediately available for summoning emergency assistance from local police departments, fire departments, or state or local emergency response teams. Internal communication equipment will also be used to contact boiler room personnel or emergency coordinators to evaluate the criteria for requesting external assistance.

The manufacturing complex is protected by the multiplex fire detection system. This system consists of flow switches, tamper switches, heat detectors, and pull stations. When activated, the system is a direct connection to the Middleton Fire Department city box 461, one (1) printer at Bostik (Boiler Room), and at an off-site alarm company. This system will activate internal horns and external strobe lights for evacuation and location purposes.

There are three (3) direct call pull boxes which send a signal directly to the Middleton Fire Department:

1. Box 461 Boiler Room, Building #3 (East Side)
2. Box 462 Pilot Plant, Building #30 (Pond Side)
3. Box 463 Tank Farm (Boston Street Side)

The location of the in-plant pull boxes, the direct call boxes, and fire hydrants at the facility is maintained in the Facility Manager's office.

F.3.1.3 Emergency Equipment

The Bostik facility maintains portable fire extinguishers, fire control equipment, spill control equipment, and decontamination equipment to respond to emergency incidents. An overview of fire protection services for the Bostik facility is presented in **Figure F-3**. The Contingency Plan (see Section G of this permit application) provides detailed information regarding all portable fire extinguishers and fire control equipment. In addition, an extensive inventory of spill control and decontamination equipment is maintained in the emergency response trailer (stationed adjacent to Building # 17) and the spill control supply room (Building # 17).

F.3.1.4 Water for Fire Control

The facility has water at adequate volume and pressure to supply water hose streams and automatic sprinklers. The plant sprinkler system is made of heat activated sprinkler heads which are tied into a water supply. The water supply consists of a matrix of piping loops. This enables water flow from more than one direction. In other words, if a break or blockage occurs in a major supply pipe, water flow will be maintained via another route. Water pressure is obtained from two sources: Peabody city water and Ipswich River water. The fire pump is set at 96-106 psi. A jockey pump assists in maintaining this pressure at all times. If the sprinkler system water pressure drops below 80 psi, the fire pump located in Building #8 comes on automatically to maintain required flow with river water. In addition, the solvent tank farm truck unloading station is protected by a foam extinguishing system and the Computer Room is protected with a Halon System.

F.3.1.5 Posted Emergency Information

An up to date written list containing the following information is posted at the telephones near the hazardous waste units:

- The name(s) and telephone number(s) of the Incident Commanders;
- The location(s) of the fire extinguisher(s), spill control material(s), and fire alarms;
- The telephone number of the fire department; and
- Evacuation routes, where applicable.

F.3.2 Aisle Space Requirement

The Bostik facility maintains sufficient aisle space to allow the unobstructed movement of personnel, fire protection equipment, or spill control equipment to any area of facility operation in an emergency. All the units subject to this permit application are outdoors and readily accessible by facility roadways.

F.4 Prevention Procedures, Structures and Equipment [40 CFR 270.14]

F.4.1 Unloading Operations

Bostik does not have unloading operations associated with the polyester burner as all tanks are hard-piped. Rain water that may collect in the containment dike for the storage tanks will be pumped out to the groundwater drainage sewer provided that the water has been analyzed by the on-site analytical laboratory. The results and actions will be noted in the daily log book for BIF Operations. As shown previously in Figures F-1 and F-2, the daily inspections of the BIF and tanks ensure that the containment systems are not deteriorating and that there are no signs of a release of waste (e.g., wet spots; dead vegetation; etc.).

The stations will also be inspected daily for accumulation of rain water. If rain water is detected in the containment system, it will be sampled and analyzed by the facility laboratory to determine if any hazardous constituents are present. If the rain water is contaminated with hazardous waste or if hazardous waste has released to the containment system, the liquid will be pumped into containers and sent off-site to a licensed hazardous waste facility. If the rain water is determined to be non-hazardous, the liquid will be pumped into a sewer to discharge to the Ipswich River.

F.4.2 Run-Off

All hazardous waste activities (storage and handling) are accomplished in permanently diked areas (see Section D, Process Information) to prevent run-off to other areas of the facility or the environment. These dikes would also prevent the unlikely event of a flooding around the hazardous waste units. If a spill of hazardous waste were to occur outside the diked areas, Bostik personnel will place covers over all storm drains. The areas around the hazardous waste units are asphalt paved; therefore, Bostik personnel will use absorptive spill cleanup materials (e.g., Zip-Zorb, rags, sawdust,

etc.) to contain the spill. Any spilled hazardous waste and contaminated cleanup materials will be disposed as hazardous waste in accordance with 310 CMR 30.000.

F.4.3 Water Supplies

The same procedures, structures, and equipment described above will be used to prevent contamination of water supplies (i.e., the Ipswich River or Bostik's Upper and Lower Ponds).

F.4.4 Equipment and Power Failure

In addition to the previously identified controls, the hazardous waste feed system is designed to become inoperable in the event of a power failure. Waste feed control valves are normally closed and require electricity to open; therefore, the valves automatically return to the closed position when power is interrupted, thus securing the system. The CEM system monitors the polyester burner and will automatically shut off the waste feed when predetermined CO parameters are exceeded (i.e., 100 ppm based on the hourly rolling average). Battery-powered emergency lighting is also available throughout indoor areas at the Bostik facility.

F.4.5 Personal Protective Equipment (PPE)

Employees involved in hazardous waste activities will receive classroom and on-the-job training equal to their level of responsibility, including identification of hazardous waste, emergency response, and the care and use of PPE (e.g., safety glasses, face shield, eye protection, respiratory protection, and protective clothing). Bostik employees requiring PPE are issued individual equipment fitted for their personal use.

F.5 Prevention of Reaction of Ignitable, Reactive and Incompatible Wastes [40 CFR 270.14(b)(9)]

The units subject to this RCRA Part B permit application do not handle reactive or incompatible wastes.

Overflow of the tanks is prevented by Magnetrol high level float switches mounted on the top of the tanks and interfaced with the PLC. If a high level condition occurs, the float switch signals the PLC and alarming to the Envicom Plus data system will occur. All pump transfer operations will then stop until the condition is corrected.

Figure F-1 BIF Daily Inspection Form

Name: _____ Date: _____

Time: _____

	T-1	T-2	(T-9) DS
Tank Level			
Last time tank was empty (< 90 days)			

	T1/T2	Day Tank	CEM	DS
Has an Emergency Waste Feed Cut-off been tested in the last 7 days?				

	PE	Bld. 27	DS	Pipeline
Conduct a visual inspection of all tanks, including fixed roofs and closure devices, for leaks.				
Conduct a visual inspection of all pumps, piping, and valves for leaks.				

Any tank leaks must be repaired as soon as possible, but no later than 45 days after detection (first attempt within 5 days).

Any leaks must be repaired as soon as possible, but no later than 15 days after detection (first attempt within 5 days).

	BIF	Flare
Inspect readings from monitoring devices to check for proper operation		

Any malfunctions must be corrected immediately.

	T1/T2	(T-9) DS	Day Tank	Struthers-Wells
Are all diked areas free of rain water and or waste?				

If there is water in a diked area a sample must be collect and brought to the Analytical Lab for testing.
Rainwater cannot be pumped from dikes without results from the Analytical Lab.

Comments:

Figure F-2 CEM Daily Inspection Form

Bostik, Inc.
CEM Daily Inspection

Name: _____ Date: _____

Time: _____

Acceptable		Inspection Procedure	Comments
Yes	No		
		Check room temperature in the CEM building. Is the air conditioner/heater operational?	
		Check the heated sample line temperature control. Verify line temperature is set to 100 +/- 5C and light is flashing on and off?	
		Check the Sample Flow roatmeter. Verify flow rated at 4 slpm +/- 0.5 slpm (equivilant to top of ball height of 6.8). Verify positive flow through the glass manifold from the magnehelic flow gauge.	
		Check the temperature on both sides of the universal analyzer chiller. Verify temperature is 4C +/- 2C and proper operation of the peristaltic pump.	
		Check the CO Analyzer display and verify that there are no alarms listed.	
		Check the O_2 monitor sample flow rotameter. Verify that the sample flow is set at 750 cc/min (equivilant to top of ball height of 4.2).	
		Was a manual recalibration performed? Record the reason for calibration in the comment section.	
		Was any maintenance/repair work conducted? If so, please explain in the BIF Log book.	
		Check the calibration gas bottles and record the information requested in the table below.	
		Check the daily calibration report for drift exceedences. The 40 CFR 266 limit is 3% for CO and 0.5% for O2.	

	Bottle PSI	Reg PSI	Spares	Replaced
Zero Gas (NIC215A) Nitrogen				
Low Span (NI181E15A) ~160 ppm CO & 18% O2 Balance Nitrogen				
High Span (NI99E15A) ~2400 ppm CO Balance Nitrogen				

Table F-1 BIF Non-Regulatory Shutdown Limits

Alarm Designation	Description of Limit
Low Combustion Air Pressure	10-45 in w.c.
Low Heat Transfer Oil Pressure	15 psi
Low Pilot Gas Pressure	8 psi
High Pilot Gas Pressure	27 psi
Low Heat Transfer Oil Flow	200 gpm
Low Heat Transfer Oil Level	Float Switch
High Heat Transfer Oil Temperature	600°F

Figure F-3 Fire Protection Services

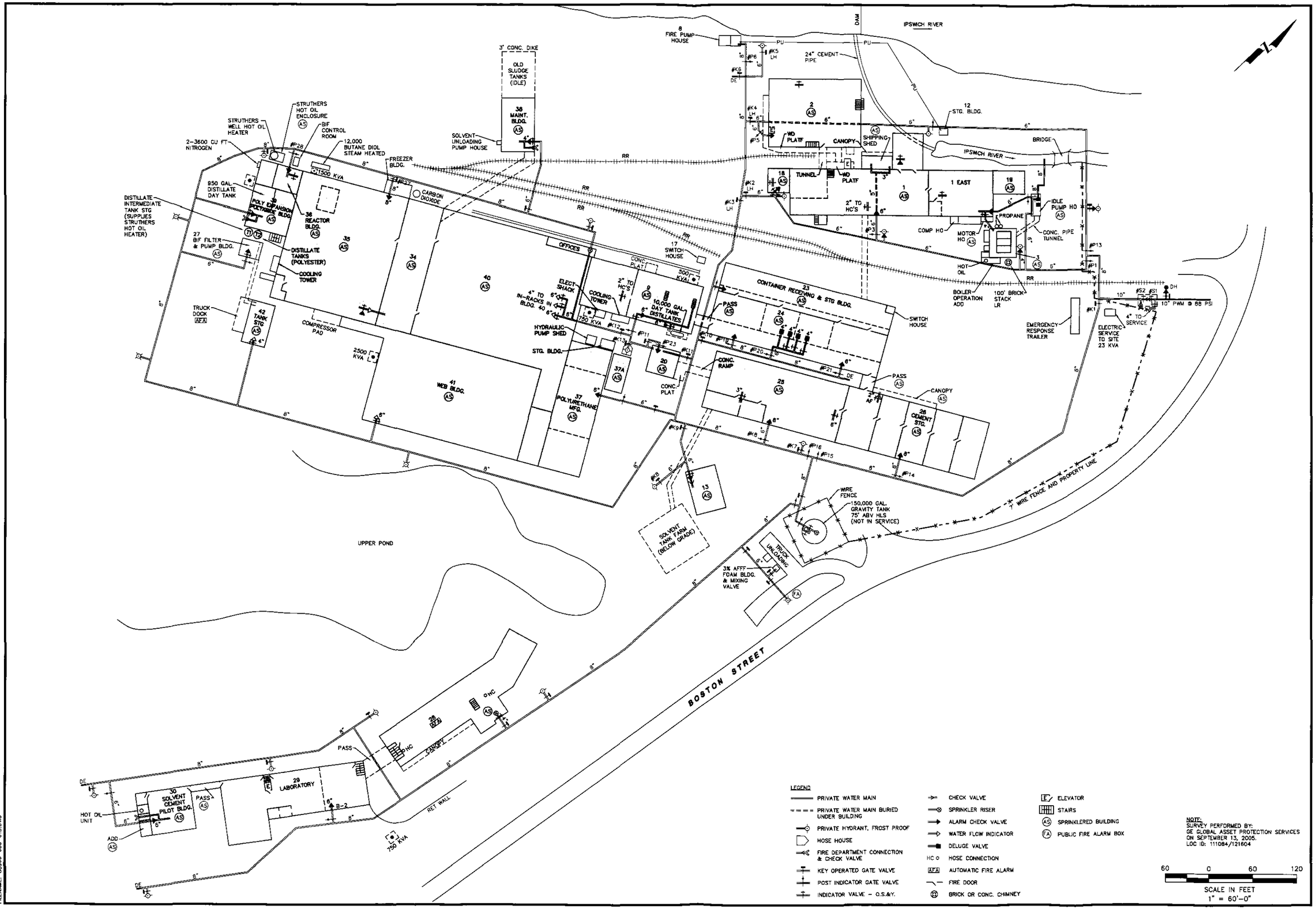

LEGEND

- PRIVATE WATER MAIN
- PRIVATE WATER MAIN BURIED UNDER BUILDING
- PRIVATE HYDRANT, FROST PROOF
- HOSE HOUSE
- FIRE DEPARTMENT CONNECTION & CHECK VALVE
- KEY OPERATED GATE VALVE
- POST INDICATOR GATE VALVE
- INDICATOR VALVE – O.S.&Y.
- CHECK VALVE
- SPRINKLER RISER
- ALARM CHECK VALVE
- WATER FLOW INDICATOR
- DELUGE VALVE
- HC HOSE CONNECTION
- AFA AUTOMATIC FIRE ALARM
- FIRE DOOR
- BRICK OR CONC. CHIMNEY
- ELEVATOR
- STAIRS
- AS SPRINKLERED BUILDING
- FA PUBLIC FIRE ALARM BOX

NOTE:
SURVEY PERFORMED BY:
GE GLOBAL ASSET PROTECTION SERVICES
ON SEPTEMBER 13, 2005.
LOC ID: 111084/121604

60 0 60 120
SCALE IN FEET
1" = 60'-0"

REVISIONS			
NO.:	DESCRIPTION:	DATE:	BY:

DESIGNED BY:	X
DRAWN BY:	K.P.B.
CHECKED BY:	D.R.
APPROVED BY:	X

ENSR AECOM

ENSR CORPORATION
2 TECHNOLOGY PARK DRIVE
WESTFORD, MASSACHUSETTS 01886
PHONE: (978) 589-3000
FAX: (978) 589-3100
WEB: HTTP://WWW.ENSR.AECOM.COM

FIRE PROTECTION SERVICES
BOSTIK, INC.
211 BOSTON STREET
MIDDLETON, MA

SCALE:	DATE:	PROJECT NUMBER:
1"=120'	11/06	00963-035-300

FIGURE NUMBER:
F-3

SHEET NUMBER:
1

FILENAME: 00963-035-010.DWG

Section G - Contingency Plan

This contingency plan (CP) describe the actions facility personnel will take to comply with 40 CFR 264 Subpart D in response to fires, explosions, or any unplanned sudden or non-sudden release of hazardous waste or hazardous waste constituents to air, soil, or surface water at the facility.

This CP is designed to minimize hazards to human health or the environment from fires, explosions, or any unplanned sudden or non-sudden release of hazardous waste or hazardous waste constituents to air, soil, or surface water. The provisions of this plan are carried out immediately whenever there is a fire, explosion, or release of hazardous waste or hazardous waste constituents which could threaten human health or the environment.

Bostik has prepared a facility-wide Integrated Contingency Plan (ICP) that addresses all RCRA and non-RCRA emergency procedures and actions. Pertinent information has been extracted from the site ICP to fulfill the requirements of this section. The ICP is designed to minimize hazards to human health and the environment from fires, explosions, severe weather events, or any unplanned release of oil or hazardous substance to air, soil, or surface water. The provisions of the ICP are to be carried out immediately whenever there is a fire, explosion, severe weather event or release of oil or a hazardous substance that could threaten human health or the environment. The Bostik ICP will remain as the primary plan for emergency response.

Bostik's ICP was written to satisfy the requirements for emergency response planning specified in the following regulations:

- Resource Conservation and Recovery Act (RCRA) Regulations
  - 40 CFR 264 Subpart D – Contingency Plan and Emergency Procedures
  - 40 CFR 265 Subpart D – Contingency Plan and Emergency Procedures
  - 40 CFR 279.52 – General Facility Standards
- Oil Pollution Act (OPA) Regulations
  - 40 CFR 112.7 – Guidelines for the Preparation and Implementation of a Spill Prevention Control and Countermeasures (SPCC) Plan
- Occupational Safety and Health Administration (OSHA) Regulations
  - 29 CFR 1910.38(a) – Emergency Action Plan
  - 29 CFR 1910.119 – Process Safety Management of Highly Hazardous Chemicals
  - 29 CFR 1910.120 – Hazardous Waste Operations and Emergency Response

G.1 General Information [40 CFR 270.14(b)(7)]

Bostik, Inc. is an international manufacturer of industrial grade adhesives and sealants. Approximately 225 people are employed at the Middleton facility in administration, research and development, and manufacturing sectors. Industrial grade adhesives manufactured at the facility include solid polyester and polyamide hot melt, resins, and solvent and water based liquid adhesives. The facility is a large quantity generator of hazardous waste and combusts hazardous waste in an industrial boiler under the BIF regulations. The site is also a Massachusetts Department of Environmental Protection (DEP) listed Tier 1B waste disposal site under the Massachusetts Contingency Plan (MCP) currently approaching the final stages of remediation.

Bostik manufactures liquid adhesives in a process that combines organic solvents with rubber and polyester based polymers. A solvent and a polymer are mixed, and when the polymer dissolves, a liquid adhesive is formed. This liquids-manufacturing process occurs in the Churn Room, Direct Solvation, and Polyurethane departments (Buildings 24, 9, and 37, respectively).

Bostik manufactures resins in polymerization reactions, which occur when diacids react with glycols (polyesters), fatty acids react with amines (polyamides), or isocyanates react with polyols (polyurethanes). Polyester distillate, a hazardous waste due to its ignitability, is a byproduct of the polymerization reactions. The polyester distillate is recycled when it is co-fired with natural gas to produce steam for the plant. The polymerization reactions occur in the Polyester, Polyamide, Polyurethane, and Direct Solvation departments (Buildings 36, 1, 37, and 9, respectively).

The Bostik site, located at 211 Boston Street, Middleton, Massachusetts, consists of approximately 103 acres of paved and unpaved areas and buildings. The developed portion of the site is bounded by the Ipswich River to the north, Boston Street to the south and east, and dense woods and the Middleton-Lynnfield town line to the west.

G.2 Emergency Coordinators [40 CFR 270.14(b)(7); 264.52(d); 264.55]

For the purposes of Bostik's ICP, appropriate contact personnel are referred to as incident commanders (ICs) and the emergency response team. **Table G-1** provides a list of these individuals for the Bostik facility. At all times, an IC will either be on the facility premises or on call and available to respond to an emergency by reaching the facility within one hour. Each designated individual can be contacted by Nextel phone individually (see Table G-1) or as a complete group. The available IC has the responsibility for coordinating emergency response measures involving hazardous waste at the Bostik facility. Each individual listed in Table G-1 is thoroughly familiar with all aspects of the facility's CP, all operations and activities at the facility, the location and characteristics of wastes handled, the location of all records within the facility, the facility layout and has access to all parts of the facility. In addition, each IC has the authority from Bostik to spend or use whatever is necessary to carry out this CP.

Whenever there is an imminent or actual emergency situation, the primary IC or the next designated alternate must immediately:

1. Activate internal facility alarms where applicable;
2. Notify appropriate State or local response agencies if needed;
3. Assess possible hazards to human health and the environment;
4. Ensure that fires, explosions, and releases do not spread to other areas at the facility;
5. Monitor leaks, pressure buildup, gas generation, or ruptures in valves, pipes, or other equipment, wherever appropriate;
6. Provide for storing and/or disposing of recovered waste;
7. Ensure that no incompatible waste are stored, treated, or disposed until completion of cleanup; and
8. Ensure that all emergency equipment is cleaned for reuse before operations are resumed.

Attachment G-1 contains the titles and responsibilities of the Bostik facility Emergency Response Team (ERT).

G.3 Implementation [40 CFR 270.14(b)(7); 264.52(a); 264.56(d)]

The emergency actions in this plan will be implemented immediately when there is a potential for, or there actually is, a fire, explosion, or release involving hazardous materials, wastes, or constituents that could threaten human health, safety, or welfare, or the environment . The Emergency Response Trailer located at the northeast entrance to the plant will serve as the command post for the incident commander.

In cases of a small controllable fire or spill (e.g., smoldering reactor insulation, burning paper in a waste basket, etc.) employees should handle the incident on their own. However, if there is the slightest question that the situation cannot easily be handled, the emergency actions in this plan should be implemented. For any incident however, the incident commander should be notified immediately.

G.4 Emergency Actions [40 CFR 270.14(b)(7); 264.56]

The IC should ensure that the emergency actions described in this section are taken immediately upon implementation of this CP.

G.4.1 Notification

The initial response to an incident includes those actions taken following discovery and initial notification of proper personnel. Initial response includes making internal and external notifications,

establishing a response management system, conducting a preliminary assessment of the situation, establishing objectives and priorities for a response, implementing a tactical plan, and mobilizing resources.

Once a Supervisor has been alerted to an incident (either by a telephone call from the person discovering the incident, or by hearing an alarm), the Supervisor will make notifications to the ICs and Emergency Response Team members. **Table G-2** outlines the actions that the Notifying Supervisor, ICs, and Emergency Response Team members will take in response to notification of an incident.

Further information on notification procedures can be found in Annex 3 of Bostik's ICP.

G.4.2 Identification of Hazardous Materials

Whenever there is a fire, explosion, or other release, the IC or designated alternate should immediately identify the character, exact source, amount, and extent of all released materials. If necessary, Material Safety Data Sheets (MSDS) can be accessed from Chem Trac (1-800-255-3924) which has a computer file of all Bostik MSDS for emergency calls. Chem-Trac has operators on duty 24 hours a day.

In order to make all information on pertinent material hazards available to employees, all departments have been equipped with right-to-know stations. The plant administration office and Emergency Command Center contain a file with the MSDS for all the raw materials on-site. In addition, the shipping area has the MSDS for all of Bostik's products. There are also multiple computer terminals throughout the facility with access to the facility's web-based MSDS search site for both raw materials and product MSDS.

In order to enhance this capability, Bostik's computer system has an emergency access system for all products. The system responds to the password and user ID "MSDS" and is menu driven for quick results. This is critical for on-site incidents as well as Poison Control Center calls.

G.4.3 Assessment

Concurrently with the identification of a release, the IC will assess possible hazards to human health or the environment that may result from a fire, explosion, or spill. This assessment must consider both direct and indirect effects of the incident, such as the effects of any hazardous surface water run off from water or chemical agents used to control fire or heat induced explosions. If the IC determines that the facility has had a release which could threaten human health, or the environment, outside the Bostik facility, he must report his findings as follows:

- If the IC's assessment indicates that evacuation of local areas may be advisable, he must notify the appropriate local authorities (as described in Section G.4.1 above). The IC must then be available to help appropriate officials decide whether local areas should be evacuated; and

- The IC must notify either the government official designated as the on scene coordinator or the National Response Center (as described in Section G.4.1 above).

G.4.4 Control Procedures

Spills or Releases:

For a hazardous material spill, trained Bostik emergency response personnel should perform the following actions:

1. Wear protective clothing, chemical splash goggles, and chemical resistant gloves;

2. Shut down all process equipment in the vicinity of the spill;

3. Extinguish all sources of ignition;

4. Ventilate the area of the spill, if applicable;

5. Place drain covers over any floor or storm water drains to prevent or limit the release of hazardous material;

6. Place absorbent material and absorbent bags on and around the spilled material;

7. If material entered a drain, mobilize response personnel to the drain discharge point (e.g., various discharge points leading to the Ipswich River);

8. Ensure the permanent boom at the brook outlet is in place; and

9. As needed, place rolls and portable booms of oil absorbent material to areas where the released material has entering the water.

Fires and Explosions:

Response to anything but the smallest fire will require professional help with self contained breathing apparatus. For a small fire at the facility, Bostik emergency response personnel trained to handle portable fire extinguishers should perform the following actions:

1. Using the appropriate fire extinguisher (i.e, "A" for combustibles; "B" for flammable liquids; and "C" for electrical fires), discharge the fire extinguisher from a safe distance at the base of the flames with a sweeping motion;

2. Continue this action until all flames are clearly out;

3. Remove adjacent combustible materials away from the fire area;

4. Monitor the fire area for potential re-ignition until the incident is clearly extinguished; and

5. If the fire gets out of control at any time or human health is endangered (e.g., smoke inhalation, nearby chemical ignition, etc.), Bostik personnel must evacuate the area to allow professional firefighters to respond.

Runoff from sprinklers and fire hoses will not generally be a problem unless it becomes contaminated with hazardous waste. In this case, Bostik personnel should keep the contaminated water out of the drains. Portable drain covers should be used to prevent a release to surface waters.

G.4.5 Prevention of Recurrence of Spread of Fires, Explosions or Releases

During an emergency, the IC should take all reasonable measures necessary to ensure that fires, explosions, runoff, and other releases do not occur, recur, or spread off the site or to other hazardous materials/waste at the facility. These measures should include, where applicable, the following:

- Stopping processes and operations in the affected area;
- Collecting and containing released waste;
- Removing or isolating containers; and
- Moving other hazards away from the incident.

If operations are stopped, the IC should designate a Bostik representative to monitor the operations for leaks, pressure buildup, gas generation, and ruptures in valves, pipes, or other equipment, whenever this is appropriate.

Further information regarding demobilization of response resources; incident investigation (information gathering, root cause determination, developing solutions and documentation); response critique / CP review; and written follow-up reports can be found in Section 4 of Bostik's ICP.

G.4.6 Storage, Treatment and Disposal of Released Material

All recovered waste, collected run off, contaminated soil or surface water, or any other material from an incident will be characterized to determine whether it is a hazardous waste in accordance with 310 CMR 30.100. Until characterized, the collected material will be managed as a hazardous waste in accordance with 310 CMR 30.000.

G.4.7 Incompatible Waste

Incompatible wastes will be moved to separate storage locations within the Bostik facility. The IC will notify the EPA Regional Administrator, Massachusetts DEP, and local authorities that the site is in compliance with RCRA requirements specified in 40 CFR 264.56(h)(1) and 310 CMR 30.524(6)(e)3a before operations are resumed in the affected area(s) of the site. The regulations specify that incompatible wastes will not be treated, stored, or disposed until the completion of the cleanup.

G.4.8 Post-Emergency Equipment Management

The IC should promptly initiate restoration of emergency and fire protection equipment (fire extinguishers, sprinklers, etc.) to normal operation, including heat if necessary to mitigate losses due to water damage, etc. If the plant or a portion of it is shut down because of hazardous wastes being released, it will not be restarted until cleanup is completed and all emergency equipment has been cleaned and made ready for reuse. Response personnel should secure the hazard area after the incident and guard against vandalism.

The IC will notify the EPA Regional Administrator, Massachusetts DEP, and local authorities that the site is in compliance with RCRA requirements specified in 40 CFR 264.56(h)(2) and 310 CMR 30.524(6)(e)3b before operations are resumed in the affected area(s) of the site. The regulations specify that all emergency equipment be cleaned and fit for use before operations are resumed. All of this information will be listed in the hazardous waste log and when the problem is over the IC will certify that cleanup is complete.

G.4.9 Container Spills and Leakage

If a container holding hazardous waste is not in good condition (e.g., severe rusting; apparent structural defects; etc.) or if it begins to leak, the IC or designated alternate should transfer the hazardous waste from this container to a container that is in good condition, or place the entire damaged waste container into an oversized (overpack) container.

G.4.10 Tank Spills and Leakage

In addition to the emergency actions described above, the IC or designated alternate should complete the actions described in this subsection related to the hazardous waste spills and leaks from the storage tanks. Additional measures are discussed below.

G.4.10.1 Stopping Waste Addition

If the tank system or secondary containment system has a leak, has had a spill, or is unfit for use, the IC or designated alternate should immediately stop the flow of hazardous waste into the tank system or secondary containment system and inspect the system to determine the cause of the release.

G.4.10.2 Removing Waste

If the tank system has had a release, the IC or designated alternate should remove as much of the waste as is necessary to prevent further release of hazardous waste to the environment and to allow inspection and repair of the tank system to be performed. The waste removal must be completed within 24 hours after detection of the leak, or if Bostik can demonstrate that this time limit is not possible, at the earliest practicable time. If the material released was to the secondary containment system, all released materials must be removed within 24 hours or in as timely a manner as is possible to prevent harm to human health and the environment.

G.4.10.3 Containment of Visible Releases

The IC or designated alternate should immediately conduct a visual inspection of a release. If the visual inspection cannot confirm that further migration of the leak or spill to soils and surface water is being prevented, control procedures should be immediately implemented (see Section G.4.4). Any visible contamination of the soil or surface water will be removed and properly disposed in accordance with 40 CFR 262 and 310 CMR 30.000.

G.4.10.4 Notification Reports

The IC or designated alternate must complete the following notifications and reports:

- All releases or threats of releases of hazardous materials/wastes to the environment above the reportable quantity (RQ) must be reported to the DEP as soon as possible but not more than two (2) hours after obtaining knowledge thereof, and in compliance with the MCP reporting criteria.

- For any hazardous waste not having a RQ, releases or threats of release exceeding one pound must be reported to the DEP as described in the above paragraph.

- Any releases from tanks subject to Fire Prevention Regulations (527 CMR 9.00) must be reported to the Middleton Fire Department in accordance with 527 CMR 9.20.

- Any release to the environment (except a leak or spill that is less than or equal to one pound and immediately contained and cleaned up) must be reported to the EPA Regional Administrator within 24 hours of its detection.

- Within seven (7) days of the detection of a hazardous waste release to the environment, a written report must be submitted to the DEP's Division of Hazardous Waste and to the EPA Regional Administrator containing the following information:

    - Likely route of migration of the release;

    - Characteristics of the surrounding soil (soil composition, geology, hydrology, climate);

    - Results of any monitoring or sampling conducted in connection with the release (if available). If sampling or monitoring data relating to the release are not available within seven days, these date must be submitted to the DEP and EPA as soon as they become available;

    - Proximity to downgradient drinking water, surface water, and populated areas; and

    - Description of response actions taken or planned.

G.4.10.5 Provisions of Secondary Containment, Repair or Closure

If the requirements listed below cannot be met, Bostik will close the tank system in compliance with Section I of this permit application:

- If the cause of the release was a spill that has not damaged the integrity of the system, the system will be returned to service as soon as the released waste is removed and repairs, if necessary, are made.

- If the cause of the release was a leak from the primary tank system into the secondary containment system, the primary tank system will be repaired prior to returning the tank system to service.

- If the source of the release was a leak to the environment from a component of the tank system without secondary containment, the secondary containment will be provided for the component of the system from which the leak occurred. Such secondary containment will meet the requirements of 40 CFR 264.193(b) through (f) and 310 CMR 30.694 before the component of the tank system is returned to service, unless the source of the leak is an aboveground portion of a tank system that can be inspected visually.

- If a component is replaced to comply with the requirements described in the item above, that component will meet the provisions of 310 CMR 30.693 (Design and Installation of New Tank Systems or Components) and 30.694 (Containment and Detection of Releases).

- If the source is an aboveground component that can be inspected visually, the component may be repaired and returned to service without secondary containment.

- If a leak has occurred in any portion of a tank system component that is not readily accessible for visual inspection, (e.g., the bottom of an on-ground tank), the entire component will be provided with secondary containment in accordance with 40 CFR 264.193(b) through (f) and 310 CMR 30.694 (Containment and Detection of Releases) prior to being returned to use.

The Bostik facility will obtain a permit from the Middleton Fire Department in accordance with 527 CMR 9.21 for repairs of tanks subject to Fire Prevention Regulations (527 CMR 9.00).

G.4.11 Surface Impoundment Spills and Leakage

Bostik does not manage hazardous waste in a surface impoundment and, therefore, this section is not applicable.

G.4.12 Containment Building Leaks

Bostik does not manage hazardous waste in a containment building and, therefore, this section is not applicable.

G.4.13 Drip Pad Spills and Leakage

Bostik does not manage hazardous waste using drip pads and, therefore, this section is not applicable.

G.5 Emergency Equipment [40 CFR 270.14(b)(7); 264.52(e)]

This section describes the emergency equipment available at the Bostik facility. The equipment available to handle emergency events includes fire suppression and spill response equipment.

Facility Stationary Sprinkler System

The entire facility, with the exception of the Administration Building (Building # 29), is covered by a water sprinkler system. The piping is set up in a normal hazard arrangement with sprinklers located approximately every 8 feet. Sprinkler heads are pendant style and range in temperature settings from 165°F in non-processing areas to 265°F in high temperature process areas. The Building 40 warehouse is equipped with in-rack sprinklers.

The facility includes two loops, one covering the plant complex and one covering the Research and Administration complex. Water is supplied by the town of Peabody at a pressure of approximately 80 psi. A booster pump and backup fire pump are located in the Pump House (Building # 8). The booster pump ensures that the line pressure in the system is between 100 and 109 psi. The fire pump is designed to draw 2,000 gpm from the Ipswich River in case Peabody water is down or the pressure in the lines is not adequate for some reason.

The fire system is inspected periodically by in-house personnel and external contractors according to insurance company recommendations.

The fire system water piping layout was provided previously in Section F (see Figure F-3).

Churn Room Deluge System

This system was designed with the original building construction in 1959. This system has its own water supply and is split into four distinct bays that incorporate sprinklers that are open at all times. By using sensitive heat detectors operating on the rate of rise or fixed temperature principle, this system can apply water to a fire more quickly and with wider distribution than with systems whose operation depends on opening of sprinklers only as the fire spreads. When the heat from a fire actuates the fire-detecting device in a bay, the deluge valve for that bay opens and water flows to, and discharges from, all the sprinklers on the piping system in that bay. This system is tested and inspected by a certified testing firm on an annual basis.

Solvent Tank Farm Foam System

When automatically activated, the aqueous film-forming foams (AFFF) concentrate is proportioned to a final concentration (3% - 6%) by volume with water and dispensed through water spray nozzles and sprinkler devices. During activation, the entire contents of the AFFF storage tank are emptied.

Activation of the system can be accomplished in two ways: (1) by thermostat detectors (145-165°F) positioned on top of the steel support structure over the tanker off-loading station and/or (2) by pulling the manual pull box. While discharging, the water side of the system will remain activated until the Middleton Fire Department approves its shutdown. The tank farm system has a dedicated master pull box (# 463) that alerts the Middleton Fire Department directly.

The AFFF foam concentrate is stored in a 300-gallon tank inside an environmentally controlled building adjacent to the tanker unloading station. The AFFF concentrate contains fluorinated, long chain synthetic hydrocarbons with particular surfactant properties. It is non-toxic and biodegradable in its diluted form of use. AFFF concentrate can be stored for long periods of time without degradation.

This system is tested and inspected by a certified testing firm on an annual basis. The shelf life of the AFF foam concentrate is three years. The shelf life can be extended through annual testing thereafter. The AFFF foam concentrate will be replaced whenever the shelf life expires.

Computer Room Halon System

This "Total Flooding System" discharges a sufficient quantity of extinguishing agent, Halon 1301, to provide a uniform fire extinguishing concentration of agent throughout the entire computer room enclosure. The system consists of a supply of extinguishing agent, Halon 1301, a means for releasing or propelling the agent from its container, and multiple discharge nozzles to apply the agent to the hazard. This system is tested and inspected by a certified testing firm on an annual basis.

Kitchen Fire Protection System

The kitchen area is protected by a dry chemical, Ansul system designed to protect against grease fires. A small Ansul tank supplies a few sprinkler heads located by the deep frying area, the broilers, and ventilation ductwork. This system is tested, inspected, and cleaned by a certified testing firm on an annual basis.

Portable Fire Extinguishers

Throughout the plant, fire extinguishers are located adjacent to every exit as well as in a 75 foot grid in all Class A (light/ordinary hazard) areas and in a 50 foot grid in all Class B (extra or flammable hazard) areas. The majority of our extinguishers are dry chemical, multi-purpose extinguishers (A,B,C) except for a few areas where different hazards require the use of CO_2 extinguishers (B,C). In general, extinguishers in production areas are 20 pounds in size while low hazard areas are generally equipped with 10 or 15 pound versions. An electronic fire extinguisher list can be found in the following location: **L:/HSEQ Middleton/safety/safety equipment/inventory/fire extinguishers**

All fire extinguishers are tested and inspected by a certified testing firm on an annual basis.

Spill Response Equipment

For the purpose of responding to releases of hazardous substances, Bostik maintains air monitoring equipment, PPE and spill control equipment. **Table G-3** provides a summary of the equipment and where it is located.

G.6 Arrangements with Local Authorities [40 CFR 270.14(b)(7); 264.37; 264.52(c)]

Bostik has an informal agreement with the Middleton Fire Department for response to fires, explosions, and releases that occur at the facility. Bostik provides annual briefings to the Fire Department to familiarize them with the facility layout and provisions for chemical storage.

The nearest medical facility is the Lahey Clinic North Shore in Peabody, Massachusetts. The IC will refer to the relevant MSDS and provide the necessary information to hospitals regarding materials that were released.

G.7 Evacuation Plan for Facility Personnel [40 CFR 270.14(b)(7); 264.52(f)]

An evacuation of the facility will be initiated by either activation of the in-plant fire alarm system, which will initiate horns and strobe lights; making an announcement over the public address system; or by verbal instruction. A detailed description of these systems is provided in Annex 1 of the facility's ICP.

Table G-4 provides information related to evacuation procedures and **Table G-5** identifies evacuation meeting areas. **Figures G-1, G-2 and G-3** provide plans showing areas of hazardous waste activity, building exits and evacuation areas and evacuation routes.

G.8 Required Report Procedures [40 CFR 270.14(b)(7); 264.56(j)]

Within seven (7) days of the incident requiring the implementation of the CP (see Section G.3), the IC will submit a written report describing the incident to the EPA Regional Administrator and the Massachusetts DEP. The report will include the following information:

1. Name, address and telephone number of the owner or operator;
2. Name, address and telephone number of the facility;
3. Date, time and type of incident (i.e. fire, spill, etc.);
4. Name and quantity of material(s) involved;
5. Extent of injuries, if any;
6. Assessment of actual or potential hazards to human health or the environment, where applicable;
7. Estimated quantity and disposition of recovered material resulting from incident;

8. Differences between the emergency response activities actually taken and those prescribed in the Contingency Plan and the reasons for each such difference; and

9. Proposed measures to prevent similar incidents in the future.

The IC will also note in the facility operating record the time, date, and details of any incident that requires implementation of the CP in the form of an Environmental Incident Report. The Plant Manager will notify the appropriate authorities and the insurance agent of the incident, as appropriate.

Within sixty (60) days after a release or threat of release of an oil or hazardous material reported in accordance with the MCP criteria, the IC must complete a Release Notification & Notification Retraction Form (BWSC-103). The notification retraction box should be checked on the form if the following conditions are met:

- A release did not actually occur;
- Conditions posing a threat of release did not actually exist; or
- The subject release or threat of release did not meet one or more of the sets of notification criteria.

G.9 Location and Distribution of Contingency Plan [40 CFR 270.14(b)(7); 264.53]

Internal copies of the facility's ICP are kept in the Health Safety Environment & Quality Manager's office and in the emergency response trailer. Externally, copies of the facility's ICP have been provided to the Middleton Fire Department and the facility's emergency response contractor (Triumvirate Environmental).

The following is a list of local agencies that may be notified or called upon for assistance in response to an incident at the facility:

<u>Towns of Middleton, North Reading, and Lynnfield Police Departments</u>

In the event a local area evacuation is required, the Incident Commander will ensure that the appropriate local police departments are notified. The Middleton Police Department is familiar with access roads to and from the facility, entrances to the facility, and operations conducted at the facility, and will therefore be responsible for directing evacuation routes in the vicinity of the facility, and directing traffic at the entrances to the facility.

<u>Town of Middleton Fire Department</u>

Bostik provides the Middleton Fire Department with an annual overview of plant operations and relevant facility information. Topics covered include an overview of facility evacuation routes; facility buildings; processes; materials inventory; fire system water piping; and electrical systems. The Fire

Department also conducts annual inspections of the entire facility, focusing on fire and life safety hazards.

In the event of a release of hazardous materials, fire, or explosion occurs that cannot be stabilized by the Bostik emergency response team, the Middleton Fire Department will be notified and requested to respond.

Town of Middleton Board of Health, Town of Middleton Conservation Commission, Peabody Water Department, Ipswich Watershed Association

In the event of a release of hazardous materials to the Ipswich River, the Incident Commander will ensure that the Middleton Board of Health, Middleton Conservation Commission, Peabody Water Department, and Ipswich Watershed Association are notified.

Local Hospital

Any injured personnel or medical emergencies will be directed to the nearest medical center, the Lahey Clinic North Shore located at 1 Essex Center Drive in Peabody. Bostik will supply the Lahey Clinic with any relevant information including MSDS sheets prior to the arrival of any injured employees, for the purpose of familiarizing the center with the properties of materials handled at the facility, and the types of injuries that could result from fires, explosions or hazardous materials releases at the facility.

Emergency Response Contractor

Arrangements have been made with one emergency response contractors, Triumvirate Environmental, for response to hazardous materials emergencies that could potentially occur. They have been provided with a copy of the facility's ICP as well as a listing of hazardous materials, including hazardous wastes, that may be present at the facility.

Licensed Site Professional (LSP)

GEI Consultants, Inc. has agreed to provide LSP services in response to releases of oil or hazardous materials that require notification under the MCP.

Table G-1 Incident Commander Contact Information

Working Shift	Name / Title	Home Address	Telephone Numbers
1st Shift	John Raymond Plant Manager Primary IC, 1st Shift	69 Norval Avenue Stoneham, MA	Home: (781)-279-4269 Office: (978)-750-7470 Nextel: (978)-580-0230
1st Shift	Daniel F. Welch HSE&Q Manager	131 Linebrook Road Ipswich, MA	Home: (978)-356-7199 Office: (978)-750-7402 Nextel: (978)-423-9133

Table G-2 Internal Notification Procedures

Notifying Supervisor Will:		
Step	**Action**	**Description**
1	Notify Incident Commanders and Emergency Response Team	Notify individual Emergency Response team members via Nextel phones
2	Direct Emergency Response Personnel	Remain at the Incident Command Center to direct incoming emergency response personnel.
3	Document Incident Information	Begin completing the Incident Information Form (ICP-02) and provide to IC upon arrival.
4	Log Incoming Personnel	Log in all incoming response personnel on the Response Log-in Form (ICP-03).
Primary Incident Commander Will:		
Step	**Action**	**Description**
1	Report to Command Center immediately	The pre-designated Primary IC during the shift will report to the Incident Command Center upon notification of an incident.
2	Set up Incident Command Center	After receiving initial information from the Notifying Supervisor, the IC will begin organizing the response effort.
Alternate Incident Commanders Will:		
Step	**Action**	**Description**
1	Call in and remain on stand-by	Alternate ICs will call the Incident Command Center and remain on stand-by.
Emergency Response Team Members Will:		
Step	**Action**	**Description**
1: On-site	Report to the Incident Command Center	If the team member is on-site at the time the group page is initiated, the team member will report to the Incident Command Center immediately.
2: Off-site	Call in and remain on stand-by	If the team member is off-site at the time a group page is initiated, the team member will remain on stand-by.

Table G-3 Spill Response Equipment

Type of Equipment	Equipment List	Location
Air Monitoring	▪ MicroMax 4 Gas meter (H_2S, CO, LEL, O_2) ▪ Thermo Environmental Photoionization Detector (PID) ▪ Flame Ionization Detector ▪ Draeger Tubes	Command Center
Spill Control Stations (Plastic drum on wheels containing spill equipment)	▪ Absorbent pads ▪ Booms ▪ Socks ▪ Granules	Adjacent to hazardous waste satellite accumulation areas: <u>Department (Bldg)</u> Solvent Cement (25) Shipping/Receiving (23) Solvent Tank Farm Bulk Storage (42) Polyurethane (37) Polyester (36) Rod Cement (35) Polyamide (1) Pilot Plant (30)
Miscellaneous Spill Equipment	▪ Absorbent pads ▪ Booms ▪ Granules	Building 17 Spill Supply Room
Spill Response Equipment and PPE	▪ Level B Suites ▪ Self Contained Breathing Apparatus (SCBA) ▪ Spare SCBA Bottles ▪ Drum Repair Kit ▪ Absorbent Sheeting ▪ Hydrophobic Absorbent Booms ▪ Rubber Boot Covers ▪ Nitrile Gloves ▪ Duct Tape ▪ Plastic Shovels ▪ Plastic Squeegees ▪ Plastic Scrapers	Spill Response Trailer located adjacent to the Emergency Command Center

Table G-4 Evacuation Procedures

All Personnel Will:		
Step	**Action**	**Description**
1	Shut off equipment	While evacuating, employees shall shut off any equipment that could escalate the incident (if appropriate and safe to do so).
2	Evacuate building	All personnel shall immediately evacuate the buildings through the nearest exit. Personnel assigned a walkie-talkie should take it with them.
3	Proceed to designated meeting area	All evacuated personnel shall report to the designated meeting area for that department. Directions to meeting areas are posted on all exit doors, and are provided in Annex 1 of the Bostik ICP.
4	Conduct headcount	The highest-ranking official in each designated meeting area shall conduct a thorough headcount. This information will be communicated to the Incident Commander located at the Incident Command Center , using Nextel phones or the in-plant walkie-talkies.
Incident Commanders and Emergency Response Team Members Will:		
Step	**Action**	**Description**
1	Evacuate building	Take visitor's logs and assigned walkie-talkie where required.
2	Proceed to Incident Command Center	Proceed to Incident Command Center immediately to find out what the magnitude of the incident is and what response is necessary. DO NOT PROCEED DIRECTLY TO LOCATION OF INCIDENT.

Table G-5 Evacuation Meeting Areas

Meeting Area	Departments (Building #)	Primary Meeting Area	Alternate Meeting Area
A	Research (29) Pilot Plant (30) Administration (28)	West end of Admin/Research parking lot by Upper Pond.	Front of Administration building by Boston Street.
B	Latex & Polyurethane (37) Sorbo (20) Dugout (13) Polyester (36/39) Rod Cement (34/35) Web Dept (41) Bulk Storage (42)	East of Manufacturing parking lot by Emergency Command Center.	South side of Rod Cement by Upper Pond.
B	Direct Solvation Banbury(9) Churn Room (23/24) Shipping (25) Specialty (26) Main Warehouse (40)	East of Manufacturing parking lot by Emergency Command Center.	South side of Rod Cement by Upper Pond.
B	Plant Offices (1) Maintenance (2) Polyamide (1/19) Boiler House (18)	East of Manufacturing parking lot by Emergency Command Center.	South side of Rod Cement by Upper Pond.

Figure G-1 Hazardous Waste Activity

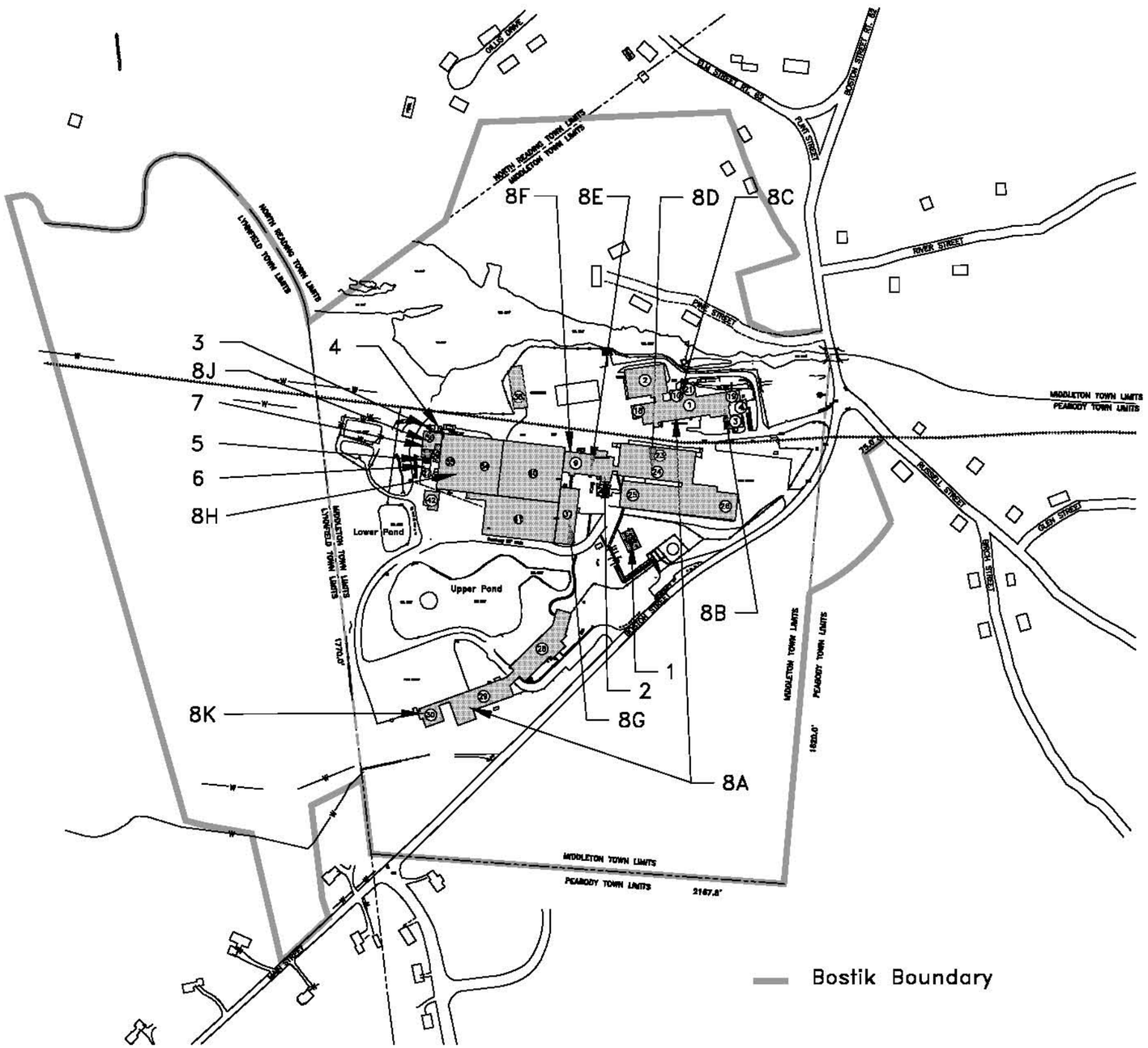

LEGEND:

NOTE: SAW (SOLVENT ADHESIVE WASTE)

HAZARDOUS WASTE ACTIVITY LOCATIONS
1. 90-DAY STORAGE
2. DIRECT SOLVATION 10,000 GALLON DISTILLATE TANK
3. STRUTHER-WELLS BURNER
4. CEM CONTROL ROOM
5. POLYESTER DISTILLATE TANKS – 2 @ 8,800 GALLONS
6. DISTILLATE PUMPING BLDG.
7. POLYESTER DAY TANK – 950 GALLONS
8. SATELLITE ACCUMULATION AREAS
   A. QUALITY ASSURANCE (SAW)
   B. POLYAMIDE (OIL & DIOL)
   C. MAINTENANCE (OIL)
   D. CHURN ROOM (SAW)
   E. DIRECT SOLVATION (SAW & OIL)
   F. BANBURY (OIL)
   G. POLYURETHANE (OIL & SAW)
   H. ROD CEMENT (OIL)
   I. POLYESTER (OIL & DISTILLATE)
   J. PILOT PLANT (OIL & SAW)

REFERENCE:
BOSTIK, INC.
HAZARDOUS WASTE ACTIVITY, DWG. NO. 10052006
DATED: 9/28/06

REVISIONS			
NO.:	DESCRIPTION:	DATE:	BY:

DESIGNED BY: X
DRAWN BY: K.P.B.
CHECKED BY: D.R.
APPROVED BY: X

ENSR | AECOM

ENSR CORPORATION
2 TECHNOLOGY PARK DRIVE
WESTFORD, MASSACHUSETTS 01886
PHONE: (978) 589-3000
FAX: (978) 589-3100
WEB: HTTP://WWW.ENSR.AECOM.COM

HAZARDOUS WASTE ACTIVITY
BOSTIK, INC.
211 BOSTON STREET
MIDDLETON, MASSACHUSETTS

SCALE:	DATE:	PROJECT NUMBER:
1"=400'	11/06	00963-035

FIGURE NUMBER: G-1

SHEET NUMBER: X

FILENAME: 00963-035-G01.DWG

Figure G-2 Building Exits and Evacuation Areas

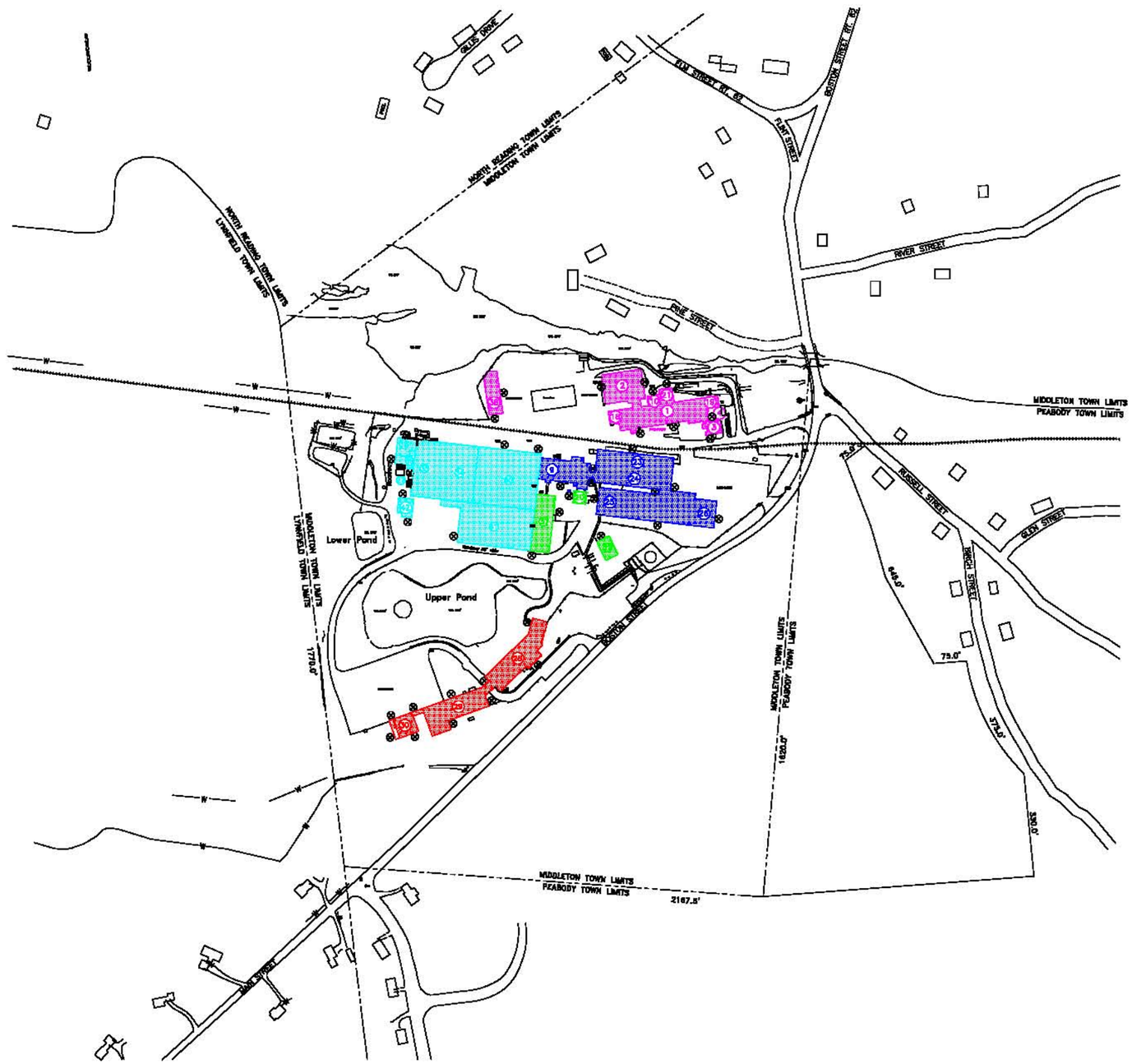

LEGEND

- Plan A (Red): Administration, research & pilot Plant Bldg. #28, 29, 30) Meeting Places (Red) The west end of the Admin./research parking lot and the east side of the admin. on the foot path to manufacturing. Alternative: Far side of the pond.
- Plan B (Blue): Direct Solvation, Banbury, SBA, Shipping, Speciality (bldg. #9,23,24,25,26,37) Meeting places: (Blue) East side of manufacturing parking lot. Alternative: north side of warehouse bldg.
- Plan C (Yellow): Polyester, Rad Cement, Web (Bldg. 34,35,36,38,41) Meeting Places: south side Web – Pond side. Alternative: East side of bldg. #38 (formerly bldg. #5)
- Plan D (Green): Latex, Polyurethane, 90-day storage (bldg. #18,20,37) Meeting Places: (Green) Along fence on the foot path to Administration. Alternative East end of manufacturing parking lot.
- Plan E (Magenta): Plant offices, Engineering, QC Lab, Steam plant (bldg. #1,2,3,4,8,10,18,19,21,38) Meeting Places: (Magenta) East of manufacturing parking lot. Alternative: east side of bldg. #38 (lawn area)
- Emergency egresses
- BUILDING NUMBERS
- CHAIN LINK FENCE
- WETLANDS
- STONE WALL
- RAILROAD
- CONTOUR
- BUILDING
- TREE LINE
- WALL

REFERENCE:
BOSTIK, INC.
BLDG. EXITS & EVACUATION AREAS
DATED: 10/02/2006

0 200 400
SCALE, FEET

DESIGNED BY:	NO.:	REVISIONS DESCRIPTION:	DATE:	BY:
X				
DRAWN BY: K.P.B.				
CHECKED BY: D.R.				
APPROVED BY: X				

ENSR | AECOM

ENSR CORPORATION
2 TECHNOLOGY PARK DRIVE
WESTFORD, MASSACHUSETTS 01886
PHONE: (978) 589-3000
FAX: (978) 589-3100
WEB: HTTP://WWW.ENSR.AECOM.COM

BLDG. EXITS & EVACUATION AREAS
BOSTIK, INC.
211 BOSTON STREET
MIDDLETON, MASSACHUSETTS

SCALE:	DATE:	PROJECT NUMBER:
1"=200'	11/06	00963-035

FIGURE NUMBER:
G-2

SHEET NUMBER:
X

FILENAME: 00963-035-1(0).DWG

Figure G-3 Evacuation Routes

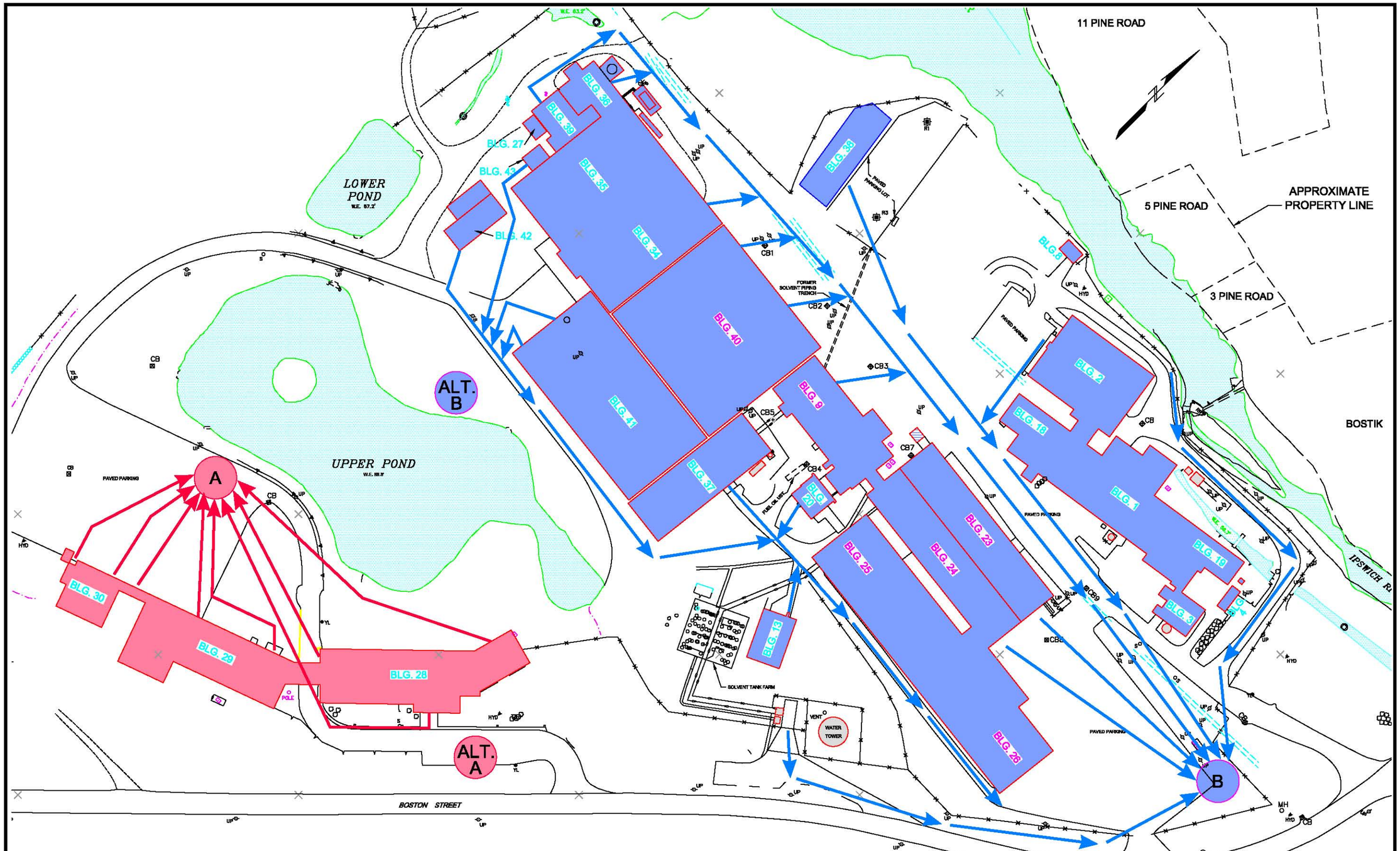

LEGEND

A — EVACUATION MEETING LOCATION "A"

EVACUATION ROUTE

NOTES:

1. LOCATIONS ARE APPROXIMATE.

REFERENCE:
GEI CONSULTANTS, INC.
EVACUATION ROUTES, FIG. A1-1
DATED: October 2002

0 120 240
SCALE, FEET

FILENAME: 00963-035-11D.DWG

REVISIONS		
NO.:	DESCRIPTION:	DATE: BY:

DESIGNED BY: X
DRAWN BY: K.P.B.
CHECKED BY: D.R.
APPROVED BY: X

ENSR | AECOM

ENSR CORPORATION
2 TECHNOLOGY PARK DRIVE
WESTFORD, MASSACHUSETTS 01886
PHONE: (978) 589-3000
FAX: (978) 589-3100
WEB: HTTP://WWW.ENSR.AECOM.COM

EVACUATION ROUTES
BOSTIK, INC.
211 BOSTON STREET
MIDDLETON, MASSACHUSETTS

SCALE: 1"=120'
DATE: 11/06
PROJECT NUMBER: 00963-035

FIGURE NUMBER: G-3

SHEET NUMBER: X

ATTACHMENT G-1

ENVIRONMENTAL RESPONSE TEAM ORGANIZATION

2.2 Establishment of the Response Management System

Bostik has elected to follow the fundamental principles of the National Interagency Incident Management System (NIIMS) based Incident Command System (ICS) for response to oil and hazardous substance releases, fire, and explosion. Below is a description of how Bostik will establish their Response Management System (RMS) upon notification of an incident.

2.2.1 Incident Commander and Command Center

The most senior Emergency Response Team member responding to an incident will become the Incident Commander in charge until a qualified Incident Commander responds to the incident. The Incident Commander will establish a command center at the Emergency Response Trailer located at the northeastern corner of the property. In the event that Federal and/or State On-Scene Coordinators respond to the incident, one of them may become the Incident Commander in charge of the incident.

Upon arrival to the Command Center, the Incident Commander will begin a preliminary assessment of the situation, referring to the Incident Information Form (ICP-02). Based on his preliminary assessment, the Incident Commander will make the required external notifications, document the notifications made on ICP 02, and establish a Response Management Organization to fit the level of response necessary for the incident.

2.2.2 Response Management Organization

For the purposes of pre-planning, Bostik has developed a response management organizational structure that will be used as a guide when establishing an RMS for a specific incident. This organization chart will also be permanently affixed in the form of a magnetic white board in the Emergency Response Trailer. The size and complexity of the RMS established for each incident will vary with the size and complexity of the incident. More than one function may be assigned to one person, based on the size and complexity of the incident. At a minimum, the following key functions will be carried out for every incident:

<u>Incident Commander</u>

The Incident Commander is responsible for overall management of the incident, including directing incident activities, developing overall objectives, priorities, and strategies, and approving the ordering and releasing of resources.

<u>Safety Officer</u>

The Safety Officer is responsible for monitoring and assessing hazardous and unsafe situations and developing measures to assure personnel safety during responses to incidents.

The following functions will be carried out as necessary, based on the magnitude and complexity of the incident:

<u>Liaison Officer</u>

The Liaison Officer is responsible initiating contact with Assisting and Cooperating Agency Representatives, such as the responding Fire Department, Police Department, Emergency Response Contractor, notifying the corporate office, maintaining open lines of communication between the Incident Commander and outside organizations/agencies, and maintaining a log of all calls made and received.

Public Affairs Officer

The Public Affairs Officer, having the authority to speak publicly for the company, is responsible for developing and releasing information about the incident to the media, incident personnel, and other appropriate agencies and organizations.

Operations Officer

The Operations Officer is responsible for securing the area, establishing staging areas, delivering the necessary manpower and equipment to the site, requesting the resources needed to implement the tactical plan, and supervising the execution of the tactical plan.

The Incident Commander will document the structure of the Response Management Organization established in response to a specific incident on the Incident Response Management Organization Form (ICP-04) as well as on the white board in the Incident Command Center.

Section H - Personnel Training

H.1 Outline of Introductory and Continuing Training Program [40 CFR 270.14(b)(12); 264.16(a)(1)]

This training program includes job titles and descriptions, training content, frequency, and techniques, training director, relevance of training to the job descriptions, training for emergency response, and implementation of the training program.

H.1.1 Job Title / Job Description

The following Bostik personnel will receive the training described in this plan:

Polyester Reactor Operators: Responsible for the loading and operation of reactors for the Polyester manufacturing process, from which the waste distillate is generated. Responsible for the daily operation of the Struthers-Wells burner and daily (weekends) inspection of all related equipment utilized in the transfer and firing of Hazardous Waste at Buildings 27 and 36, including:

1. Inspection of the piping and fittings;

2. Inspection of storage tanks;

3. Inspection of containment areas;

4. Inspection of storage tank capacity;

5. Weekly testing of emergency cutoffs;

6. Inspection of the control room;

7. Entries in the log book to verify all changes in operating conditions as they occur; and

8. Completion of the inspection report.

Direct Solvation Reactor Operators: Responsible for the loading and operation of reactors for the direct solvation polyester processes, which also produce distillate burned in the BIF system. Responsible for the daily (weekends) inspection of all equipment associated with the storage and transfer of Hazardous Waste at Building 9, including:

1. Record the transfer of distillate;

2. Inspection of tanks, pipes, pumps and associated equipment;

3. Verify tank capacity;

4. Inspect containment areas;

5. Transfer distillate to T1 & T2; and

6. Completion of the inspection report.

Health Safety & Environmental Supervisor: Responsible for the timely completion and submittal of all mandated reports. Provide support to the BIF operation and function as an alternate to the Health Safety Environment & Quality Manager. Assume all duties as required to ensure compliance with government regulations and Bostik Standard Operating Procedures (SOPs). Responsible for maintaining 90-day storage requirements, manifesting shipments, and auditing hazardous waste collection areas. Assist the Health Safety Environment & Quality Manager with recycling and reporting requirements. Responsible for the daily (weekdays) BIF inspections and conducting daily audits of the CEMS, including:

1. Review daily BIF inspection reports and follow up with remedial actions as required;

2. Monitor and record computer status screen;

3. Inspect calibration gas;

4. Inspect filters;

5. Check sample pressure;

6. Check flow meter settings; and

7. Complete CEM Daily (weekdays) inspection report and report any alarm conditions and the remedial actions taken.

Health, Safety, Environment & Quality Manager: Responsible for the administration and coordination of all health & safety, environmental, and quality activities. Establish programs and procedures to ensure compliance with all Federal, State and Local regulations. Responsible for the overall management and administration of the BIF operation, including:

1. Develop policies and procedures to ensure that all aspects of the regulations are in compliance;

2. Conduct periodic inspections of the BIF system;

3. Schedule quarterly Cylinder Gas Audits (CGAs);

4. Schedule Annual Relative Accuracy Test Audits (RATAs);

5. Provide back-up support for daily (weekdays) CEM inspections and other duties of the Health Safety & Environmental Supervisor; and

6. Conduct training, in conjunction with the Health Safety & Environmental Supervisor, for all personnel involved with the transfer and burning of hazardous waste.

Process Engineer: Responsible for the evaluation and enhancement of manufacturing processes to achieve maximum productivity. Responsible for the operation of the Struthers-Wells burner and all associated equipment, including:

1. Schedule maintenance operations for all associated equipment involved with the transfer and burning of hazardous waste; and

2. Monitor Reactor Operators to ensure adherence with all compliance regulations.

H.1.2 Description of How Training Will be Designed to Meet Actual Job Tasks

All Bostik personnel associated with the BIF operation (i.e., permitted hazardous waste operations) will successfully complete a program consisting of class room and on-the-job training. Training will ensure that each operator understands and can perform the requirements necessary to maintain compliance with this RCRA Part B Permit Application.

This training program includes a description of the type and amount of introductory and continuing education that each operator will receive in accordance with their specific responsibilities.

Facility personnel will successfully complete the required training within six months after the date of their initial employment with Bostik, or transfer to a new position at the facility, whichever is later. New employees will not be allowed to work in unsupervised positions until they have completed the necessary training requirements. Personnel assigned duties in hazardous waste management will participate in an annual review of their initial training and must continue to successfully display their full understanding of the requirements relative to their level of involvement.

H.1.3 Training Director

Daniel F. Welch is the Bostik Training Director and maintains the following qualifications:

- M.S., Hazadous Materials Management, Tufts University
- B.S., Biology (Chemistry Minor), Salem State College
- OSHA 40 hour certification;
- OSHA General Industry Outreach Trainer

H.1.4 Relevance of Training to Job Position

This program will be structured to ensure that all personnel involved in the handling, transfer and burning of hazardous waste are fully trained in hazardous waste management procedures (including contingency plan implementation) relevant to their positions. The training will comprise seven elements based on the level of involvement of various individuals as follows:

Element 1. For all Bostik employees that come in contact with hazardous substances:

- Hazard Communication;
- Storm water pollution prevention and fire and spill pollution prevention;
- Lockout-Tagout procedures;
- PPE;
- Forklift operation; and
- On the-job training.

Element 2. In addition to Element 1, personnel responsible for hazardous waste management including reactor operators, maintenance personnel, and engineers will be trained in:

- Boiler operations;
- Hazardous waste management practices and procedures;
- Monitoring and leak detection procedures; and
- Daily inspection requirements and procedures.

Element 3. Members of Emergency Response groups or teams will receive additional training in:

- Emergency response (awareness level); and
- Fire, Spill, Explosion and Confined Space procedures.

Element 4. Emergency Coordinators (i.e., Incident Commanders) will receive additional instruction in the implementation and review of all emergency procedures, security requirements and reporting requirements.

Element 5. Personnel with responsibilities for storing, labeling and shipping hazardous waste will receive additional training in:

- RCRA regulations; and
- DOT regulations.

Element 6. Personnel involved with the in-house training of Bostik and contractor employees will be qualified in all aspects of the various training elements and will receive additional instruction in:

- Development of lesson plans;
- Presentation skills;

- Media selection; and
- Documentation requirements.

Element 7. Contractors working on Bostik property will receive training as required to ensure safe work practices and will include as a minimum the requirements of Element 1.

H.1.5 Training for Emergency Response

Facility personnel will be trained to respond effectively to emergencies (awareness level) and will be trained to be familiar with emergency procedures, emergency equipment, and emergency systems. See Element 3 above for specific training for members of Bostik Emergency Response groups or teams.

H.2 Maintenance of Training Records and Documentation [40 CFR 270.14(b)(12); 264.16(b), (d)(4), (e)]

Each individual involved with the handling, storage, transfer and burning of hazardous waste will be identified in relation to their duties and their job title and training requirements will be maintained on the Health, Safety & Environment Training matrix.

This training program will ensure that all authorized personnel will be able to respond effectively to all emergency situations. Training will familiarize all personnel with established emergency procedures, emergency equipment and emergency systems, including where applicable:

a. Procedures for using, inspecting, repairing and replacing facility emergency and monitoring equipment;

b. Key parameters for automatic waste feed cut-off systems;

c. Communications and alarm systems;

d. Response to spills, fires and explosions;

e. Response to potential ground-water and river contamination incidents;

f. Struthers-Wells boiler operation; and

g. Shutdown of operations.

Written job descriptions will be maintained for each position listed in Section H-1a and will include the requisite skills, education and other qualifications and duties required for the personnel assigned to each function.

Written documentation of facility personnel training will be maintained in the Health, Safety & Environmental central file system and will include:

a. A written description of the type and amount of both introductory and continuing training that has been given to each person filling a position listed in Section H.1.1;

b. Records will document that the training and job experience has been successfully completed and that facility personnel understand the duties and responsibilities of their assignment;

c. Records of current personnel will be kept until closure of the facility is achieved;

d. Records of former employees will be maintained for at least three years from the date they last worked at the facility; and

e. Employees transferred within the company will have their records accompany them to their new assignment.

Section I - Closure/Post-Closure Plans and Financial Requirements

I.1 Closure Plans [40 CFR 270.14(b)(13)]

The Bostik facility, located in Middleton, Massachusetts, manufactures adhesives products such as hot melt polyester and polyamides resins, polyurethanes, and water-based or solvent-based liquid adhesives. Prior to the promulgation of the BIF regulations, the oil heater operated under a Massachusetts DEP recycling permit for Class B(2) facilities since 1988. From 1981 through July of 2000, hazardous waste generated from polyester manufacturing (polyester distillate) was co-fired with No. 2 fuel oil in a Struthers-Wells process oil heater to provide heat to the polyester reactor vessels. Since July of 2000, the hazardous waste has been co-fired with natural gas. The oil heater is equipped with containment in the form of impervious concrete flooring, which has been in place since the oil heater was put into operation. The polyester distillate waste stream is comprised of tetrahydrofuran, xylenes, methanol, ethylene glycol, diethylene glycol, butanediol, and hexanediol. Prior to being burned for energy recovery, polyester distillate is stored in four above-ground storage tanks: a 10,000-gallon tank (T-9) for storage of distillate generated by the Direct Solvation department; a 950-gallon day tank (DT-1) for temporary storage of distillate generated by the Polyester Department, and two 8,800-gallon tanks (T-1 and T-2) for storage of the combined distillate mixture. Each of these tanks is equipped with secondary containment in the form of impervious concrete flooring and diking, which has been in place since these tanks were put into operation. Both T-9 and DT-1 are hard-piped to the two 8,800-gallon distillate storage tanks. The referenced hazardous waste management units are depicted on the hazardous waste activity site plan provided previously in Figure G-1.

At this time, Bostik, Inc. anticipates RCRA closure by removal, or "clean closure", for the three hazardous waste fuel storage tanks, the Struthers Wells oil heater ("oil heater"), and ancillary equipment from the hazardous waste fuel storage tanks to the oil heater. Once RCRA clean closure is verified, the oil heater may continue to be used for burning virgin fuels.

I.1.1 Closure Performance Standard

In accordance with regulatory requirements, Bostik will perform closure on the oil heater, storage tanks and their respective containment vaults, and associated piping and metering equipment that contacts the waste distillate. Closure will be performed in a manner that is designed to:

- minimize the need for further maintenance;
- control, minimize or eliminate, to the extent necessary to protect human health and the environment, the post-closure escape of hazardous waste, hazardous constituents, leachate, contaminated run-off, or hazardous waste decomposition products to the ground or surface waters or to the atmosphere; and,

- comply with the closure requirements of Subpart G (40 CFR Part 264.110 through 264.120), and the closure requirements under 40 CFR Part 264.197 (Closure of Tank Systems) and 40 CFR Part 266.102 (Hazardous Waste Burned in Boilers and Industrial Furnaces).

I.1.2 Time and Activities Required for Partial and Final Closure Activities

This plan contains the following information:

- A description of how each hazardous waste management unit at the facility will be closed according to the RCRA closure performance standard;
- A description of how final RCRA closure of the facility will be conducted, including an estimate of the maximum inventory of hazardous waste ever on-site over the active life of the facility and the maximum extent of the operations which will not close during the active life of the facility;
- A description of steps necessary to remove all hazardous waste, decontaminate the hazardous waste management units or render them non-hazardous at RCRA closure, and demonstrate successful closure by removal of all hazardous waste;
- A description of other activities necessary during RCRA closure to ensure that closure performance standards are satisfied; and,
- A schedule for RCRA closure for each hazardous waste management unit and an estimate of the expected year of final RCRA closure.

The maximum extent of operations that will be active during the life of the facility consists of the maximum waste inventory of the four hazardous waste fuel storage tanks and the oil heater as described in item I.1.3 below.

This closure plan has been developed to accommodate partial RCRA closure of the hazardous waste management units and will be implemented in the event one or more of the units are RCRA-closed while the other units remain in service.

I.1.3 Maximum Waste Inventory

The four hazardous waste fuel tanks and associated piping contain a maximum of 28,850 gallons of D001, D018 and D035 waste. This total can be broken down as follows:

Direct Solvation Storage (T-9)	10,000 gallon capacity
Mixed Distillate Storage (T-1)	8,800 gallon capacity
Mixed Distillate Storage (T-2)	8,800 gallon capacity
Polyester Distillate Day Tank (DT-1)	950 gallon capacity
Distillate Transfer Lines	300 gallon Capacity
TOTAL INVENTORY =	**28,850 gallons**

At the time of RCRA closure, the existing hazardous inventory will be "removed" by burning in the oil heater, followed by purging the system with natural gas at 50-80% maximum load for a minimum of 24 hours. Disposal of any ash (expected to be less than 1 kilogram) will be in accordance with applicable hazardous waste regulations. As such, the ash will be sampled for total toluene, MEK and ethyl acetate to ensure compliance with the applicable land disposal restrictions (40 CFR 268.40). The analytical methodologies for these parameters will be the following:

Toluene - SW-846 Method 8240A
MEK - SW-846 Method 8240A
Ethyl Acetate - SW-846 Method 8015A modified

It is anticipated that absorbent materials and contaminated wash water generated during closure activities will be transported to an appropriate, licensed disposal facility. All shipping containers used will comply with DOT regulations. Labeling will also comply with all pertinent regulations. All hazardous waste shipments will be manifested using the hazardous waste manifest required by the receiving state.

It is noted that as a basis for determining the closure cost estimate (Section I.4 of this closure plan), closure activities include disposal of the maximum quantity of waste that is stored in the hazardous waste fuel storage tanks by a third party vendor (i.e., off-site management of the waste versus burning the waste in the oil heater).

I.1.4 Schedule for Closure

Bostik, Inc. will notify the appropriate agencies at least 45 days prior to the date final RCRA closure is expected to begin. Completion of RCRA closure will be within 180 days from receipt of the final volume of hazardous waste at each unit. Final RCRA closure will be supervised and certified by an independent professional engineer, in addition to qualified Bostik, Inc. personnel. Final RCRA closure of the units is not anticipated until 2025 or later.

I.1.4.1 Time Allowed for Closure

The proposed schedule for RCRA closure is shown in **Table I-1**. The U.S. EPA Regional Administrator and MADEP will be notified at least 45 days prior to initiating final RCRA closure activities for the hazardous waste fuel storage tanks and the oil heater. All hazardous waste stored in the hazardous waste fuel storage tanks will be removed from storage, burned in the oil heater, or shipped off-site for disposal within 90 days after receiving the final volume of hazardous waste. Final closure will be completed within 180 days after receiving the final volume of hazardous waste at the hazardous waste fuel storage tanks and oil heater. Certification that the hazardous waste fuel storage tanks and oil heater were closed according to the specifications of the approved closure plan will be sent to the U.S. EPA Regional Administrator and Massachusetts DEP within 60 days of completion of the RCRA closure of the hazardous waste fuel storage tanks and the oil heater. The certification will be signed by the owner/operator of the facility and by an independent registered professional engineer.

Extension for Closure Time

Bostik, Inc. may require an extension for closure time if unforeseen circumstances which cause delays occur.

I.1.5 Closure Procedures

I.1.5.1 Inventory Removal and

I.1.5.2 Disposal or Decontamination of Equipment

Prior to RCRA closure and decontamination of the each of the four hazardous waste fuel storage tanks, any waste distillate remaining in each tank will be pumped out and co-fired with natural gas in the oil heater. Once this has been accomplished, piping will be purged with compressed air and polyethylene containment sheeting will be installed below piping and fuel metering equipment to capture residual distillate while the equipment is disassembled. Piping and metering equipment will be temporarily staged for decontamination on polyethylene sheeting adjacent to the storage tank containment area, in a manner that prevents release of residual distillate. A polyethylene curtain will be erected around the tank contiguous with the interior surfaces of the containment dike. Technicians garbed in the appropriate personal protective equipment will access the tank interior and will pressure wash the interior surface of the tank using a solution of hot water (approximately 120°F) and a mild detergent. Following the detergent wash, the tank interior will be rinsed three times with water. On the third rinse, a rinseate sample will be collected for laboratory analysis to determine the effectiveness of decontamination. In addition, a wipe sample will be collected from the tank interior to determine the effectiveness of decontamination. The rinseate and wipe samples will be analyzed for the following primary constituents of the waste: tetrahydrofuran (SW-846 Method 8240A), toluene (SW-846 Method 8240A), xylenes (SW-846 Method 8240A), MEK (SW-846 Method 8240A) and methanol (SW-846 Method 8015A). Decontamination rinseate will be pumped via a portable pump into 55 gallon drums located outside the containment area. The drums will be staged on polyethylene to prevent the potential release of distillate during the transfer.

Upon completing decontamination of the tank interior, technicians will relocate piping and flow metering equipment into the containment area. Technicians will disassemble, to the extent practicable, and pressure wash the piping and metering equipment until all piping and equipment appears by visual inspection to have been adequately decontaminated. A sample of the final rinseate from the piping and metering equipment will be collected for laboratory analysis to determine the effectiveness of decontamination. The rinseate sample will be analyzed for the following primary constituents of the waste: tetrahydrofuran (SW-846 Method 8240A), toluene (SW-846 Method 8240A), xylenes (SW-846 Method 8240A), MEK (SW-846 Method 8240A), methanol (SW-846 Method 8015A).

When all piping and metering equipment has been removed from the containment area, the containment area will be visually inspected to ensure no cracks or breaches of integrity are present. Provided that no cracks are present, containment area surfaces will be pressure washed until visibly clean. In the unlikely event that cracks or breaches are identified at the time of RCRA closure, Bostik will assess the extent of any cracks and will evaluate the need to collect samples based on potential

impacts to subsurface soils. Technicians will pressure wash interior surfaces of the containment area and the sump with a hot water and detergent solution. The containment area and sump will be rinsed three times with water. A sample of the final rinseate from the containment area and the sump will be collected for laboratory analysis to determine effectiveness of decontamination. Rinseate will be pumped from the sump into 55 gallon drums staged adjacent to the containment dike on polyethylene. The polyethylene curtain walls will be removed and disposed as solid waste. Standing water will be removed from the containment area floor with a squeegee. It is estimated that approximately 300 – 400 gallons of rinseate will be generated during tank, piping/metering equipment, and containment area decontamination activities. A chip sample will be collected from the containment area for laboratory analyses to ensure that no residual wastes are present. The rinseate and chip samples will be analyzed for the following primary constituents of the waste: tetrahydrofuran (SW-846 Method 8240A), toluene (SW-846 Method 8240A), xylenes (SW-846 Method 8240A), MEK (SW-846 Method 8240A) and methanol (SW-846 Method 8015A).

Upon RCRA closure, the oil heater will discontinue the burning of hazardous waste fuel. The initial closure activities will consist of evacuation of the existing hazardous waste fuel inventory by burning. Next, the oil heater will be fired at 50-80% of maximum load on natural gas for a 24 hour period to eliminate any potential hazardous waste fuel residue within the oil heater. Disposal of any ash (expected to be less than 1 kilogram) will be in accordance with applicable hazardous waste regulations. As such, the ash will be sampled for total toluene, MEK, and ethyl acetate to ensure compliance with the applicable land disposal restrictions (40 CFR 268.40). The analytical methodologies for these parameters will be the following: toluene (SW-846 Method 8240A), MEK (SW-846 Method 8240A) and ethyl acetate (SW-846 Method 8015A modified). Once the oil heater is shut down and sufficiently cooled, technicians will remove the stack, the economizers, and the burner from the refractory. Wipe samples will be collected from the interior oil heater and stack, where accessible, to verify effectiveness of decontamination. A chip sample from the refractory bricks will be collected for laboratory analysis to ensure no residual waste is present. The chip sample will be analyzed for the following primary constituents of the waste: tetrahydrofuran (SW-846 Method 8240A), toluene (SW-846 Method 8240A), xylenes (SW-846 Method 8240A), MEK (SW-846 Method 8240A) and methanol (SW-846 Method 8015A). All residues will be removed and considered to be hazardous unless demonstrated to be otherwise through analytical testing.

The containment area will be visually inspected to ensure no cracks or breaches of integrity are present. Provided that no cracks are present, containment area surfaces will be pressure washed until visibly clean. In the unlikely event that cracks or breaches are identified at the time of RCRA closure, Bostik will assess the extent of any cracks and will evaluate the need to collect samples based on potential impacts to subsurface soils. Containment will be erected around the base of the oil heater. The cement base on which the heater sits will be decontaminated via pressure washing with a hot water and detergent solution. Following the detergent wash, the cement base will be rinsed three times with water. A sample will be collected from the third rinse for laboratory analysis to determine the effectiveness of decontamination. Rinseate will be pumped from the containment structure to 55 gallon drums, located on polyethylene containment, where it will await characterization for disposal. It is estimated that approximately 100 – 200 gallons of rinseate will be generated from pressure washing the oil heater and concrete base. A chip sample from the concrete base will be collected for

laboratory analyses to determine the effectiveness of decontamination. The chip sample will be analyzed for the following primary constituents of the waste: tetrahydrofuran (SW-846 Method 8240A), toluene (SW-846 Method 8240A), xylenes (SW-846 Method 8240A), MEK (SW-846 Method 8240A) and methanol (SW-846 Method 8015A).

In order to effect decontamination of the CEM System, ambient air will be drawn through the system for 24 hours following shutdown and cool-down of the oil heater.

Water used in the decontamination procedures will be collected, placed in containers and labeled. A representative sample of rinseate will be composited from the drums and sent for laboratory analysis for disposal purposes. The rinseate will be treated/disposed at an appropriate, licensed facility. Absorbent materials, polyethylene sheeting, used or spent personal protective equipment, etc. used during the decontamination procedures will be disposed off-site at an appropriate, licensed solid waste facility.

Once RCRA clean closure is verified, the oil heater may continue to be used for burning virgin fuels.

I.1.5.3 Closure of Disposal Units

Bostik, Inc. does not operate any hazardous waste disposal units at the Middleton, MA facility. Therefore, this section does not apply.

I.1.5.4 Closure of Containers

The subject facility only operates less-than-90-day hazardous waste container storage areas; therefore, the requirements under this section are not applicable.

I.1.5.5 Closure of Tanks

Hazardous waste generated from polyester manufacturing (polyester distillate) is co-fired with natural gas in a Struthers Wells process oil heater to provide heat to the polyester reactor vessels. The polyester distillate waste stream (D001) is comprised of tetrahydrofuran, xylenes, methanol, ethylene glycol, diethylene glycol, butanediol, and hexanediol, toluene, ethyl acetate, and MEK. Prior to being burned for energy recovery, polyester distillate is stored in four above-ground hazardous waste storage tanks: a 10,000-gallon tank (T-9) for the distillate generated by the Direct Solvation department, one 950-gallon above ground day tank (DT-1) for the distillate generated by the Polyester Department, and two 8,800-gallon tanks (T-1 and T-2) for the combined distillate mixture. Tanks T-1 and T-2 sit within a 30-ft by 16-ft containment area. The containment area is a 44-inch deep structure of coated concrete flooring and diking which has been in place since these tanks were put into operation. T-9 is located within a 30-foot by 15-foot containment area. The containment area is a 42-inch deep concrete structure which has been in place since this tank was put into operation. DT-1 is located within a 11-ft by 11.5-ft containment area. The containment area is an 18-inch deep concrete structure which has been in place since this tank was put into operation. Bostik anticipates that there has not been and will not be any contamination of soil or groundwater due to the operation of this unit.

RCRA closure of these units will be accomplished by removal of all hazardous waste and waste residue so as to attain RCRA "clean closure". RCRA closure of the hazardous waste fuel tanks is designed to minimize the need for maintenance and eliminate the post-closure escape of hazardous waste to the extent necessary to protect human health and the environment. This standard will be achieved by disposal of all tank wastes by on-site combustion in the oil heater, if possible, or otherwise by off-site disposal at a permitted facility. Decontamination procedures will be carried out once the hazardous waste inventory has been removed. Decontamination will include cleaning the interior of each tank, its associated piping/metering equipment and containment area.

Prior to closure and decontamination of the each of the four hazardous waste fuel storage tanks, any waste distillate remaining in each tank will be pumped out and co-fired with natural gas in the oil heater. Once this has been accomplished, piping will be purged with compressed air and polyethylene containment below piping and fuel metering equipment will be installed to capture residual distillate while the equipment is disassembled. Piping and metering equipment will be temporarily staged for decontamination on polyethylene sheeting adjacent to the storage tank containment area, in a manner that prevents release of residual distillate. A polyethylene curtain will be erected around the tank contiguous with the interior surfaces of the containment dike. Technicians garbed in the appropriate personal protective equipment will access the tank interior and will pressure wash the interior surface of the tank using a solution of hot water and a mild detergent. The tank interior will be rinsed with water three times. A rinseate sample will be collected from the third rinse to determine the effectiveness of decontamination. In addition, a wipe sample will be collected from one location on the tank interior surface using a cotton swab moistened with deionized water to determine the effectiveness of decontamination. The swab will be held in a metal clamp and wiped at least twice across the sampling location using moderate pressure. The water and wipe samples will be analyzed for the following primary constituents of the waste: tetrahydrofuran (SW-846 Method 8240A), toluene (SW-846 Method 8240A), xylenes (SW-846 Method 8240A), MEK (SW-846 Method 8240A), methanol (SW-846 Method 8015A). The criterion for successful decontamination of the tank is a non-detectable level of the parameters analyzed in water and on the swab. Decontamination rinseate will be pumped via a portable pump into 55-gallon drums located outside the containment area, staged on polyethylene. Upon completing decontamination of the tank surfaces, technicians will relocate piping and flow metering equipment into the containment area. Technicians will disassemble, to the extent practicable, and pressure wash the piping and metering equipment with a hot water and detergent solution. The piping and metering equipment will be rinsed three times with water. A water sample will be collected from the third rinse for laboratory analysis to determine the effectiveness of decontamination. The water sample will be analyzed for the following primary constituents of the waste: tetrahydrofuran (SW-846 Method 8240A), toluene (SW-846 Method 8240A), xylenes (SW-846 Method 8240A), MEK (SW-846 Method 8240A) and methanol (SW-846 Method 8015A). The criterion for successful decontamination of the tank piping and metering equipment is non-detectable levels of the parameters analyzed in water. Decontamination rinseate will be pumped via a portable pump into 55 gallon drums located outside the containment area, staged on polyethylene.

When all piping and equipment appears, by visual inspection, to have been adequately decontaminated and removed from the containment area, the containment area will be visually inspected to ensure no cracks or breaches of integrity are present. Provided that no cracks are

present, containment area surfaces will be pressure washed until visibly clean. In the unlikely event that cracks or breaches are identified at the time of RCRA closure, Bostik will assess the extent of any cracks and will evaluate the need to collect samples based on potential impacts to subsurface soils. Technicians will pressure wash interior surfaces of the containment area and the sump with a hot water and detergent solution. The containment area and sump will be rinsed three times with water. A sample will be collected from the third rinse for laboratory analysis to determine the effectiveness of decontamination. Decontamination rinseate will be pumped via a portable pump into 55 gallon drums located outside the containment area, staged on polyethylene. Standing water will be removed from the containment area floor with a squeegee. A chip sample will be collected from the containment area for laboratory analyses to ensure that no residual wastes are present. The rinseate and chip samples will be analyzed for the following primary constituents of the waste: tetrahydrofuran (SW-846 Method 8240A), toluene (SW-846 Method 8240A), xylenes (SW-846 Method 8240A), MEK (SW-846 Method 8240A) and methanol (SW-846 Method 8015A). The criterion for successful decontamination of the containment area and sump is non-detectable levels of the parameters analyzed in the rinseate and chip samples. The polyethylene curtain walls will be removed and disposed as solid waste.

It is estimated that 300-400 gallons of water will be generated during decontamination at each tank, including piping/metering equipment and containment area. Water used in the decontamination procedures will be collected, placed in containers and labeled. A representative sample of rinseate will be composited from the drums and analyzed for the following primary constituents of the waste: tetrahydrofuran (SW-846 Method 8240A), toluene (SW-846 Method 8240A), xylenes (SW-846 Method 8240A), MEK (SW-846 Method 8240A) and methanol (SW-846 Method 8015A). Analytical results will be used to arrange for treatment/disposal of the wastewater at an appropriate, licensed facility. Absorbent materials, polyethylene sheeting, used personal protective equipment, etc. used during the decontamination procedures will be disposed off-site at an appropriate, licensed facility.

I.1.5.6 Closure of Waste Piles

Bostik, Inc. does not manage hazardous waste in waste piles at the Middleton, MA facility. Therefore, this section does not apply.

I.1.5.7 Closure of Surface Impoundments

Bostik, Inc. does not manage hazardous waste in surface impoundments at the Middleton, MA facility. Therefore, this section does not apply.

I.1.5.8 Closure of Incinerators

Bostik, Inc. does not treat hazardous waste in an incinerator at the Middleton, MA facility. Therefore, this section does not apply.

I.1.5.9 Closure of Landfills

Bostik, Inc. does not manage hazardous waste in a landfill at the Middleton, MA facility. Therefore, this section does not apply.

I.1.5.10 Closure of Land Treatment Units

Bostik, Inc. does not manage hazardous waste in a land treatment unit at the Middleton, MA facility. Therefore, this section does not apply.

I.1.5.11 Closure of Miscellaneous Units

Bostik, Inc. does not manage hazardous waste in miscellaneous units at the Middleton, MA facility. Therefore, this section does not apply.

I.1.5.12 Closure of Boilers and Industrial Furnaces

Hazardous waste generated from polyester manufacturing (polyester distillate) is co-fired with natural gas in a Struthers Wells process oil heater to provide heat to the polyester reactor vessels. The oil heater is equipped with containment in the form of a 10-inch deep impervious concrete structure, which has been in place since the oil heater was put into operation. The oil heater is located within a 22.5-ft by 14-ft by 10-inch high containment area. Bostik anticipates that there has not been and will not be any contamination of soil or groundwater due to the operation of this unit. The polyester distillate waste stream (D001) is comprised of tetrahydrofuran, xylenes, methanol, ethylene glycol, diethylene glycol, butanediol, hexanediol, toluene, ethyl acetate, and MEK.

Upon RCRA closure, the oil heater will discontinue the burning of hazardous waste fuel. The initial closure activities will consist of evacuation of the existing hazardous waste fuel inventory by burning. Next, the oil heater will be fired at 50-80% of maximum load on natural gas for a 24 hour period to eliminate any potential hazardous waste fuel residue within the oil heater. Disposal of any ash (expected to be less than 1 kilogram) will be in accordance with applicable hazardous waste regulations. As such, the ash will be sampled for total toluene, MEK, and ethyl acetate to ensure compliance with the applicable land disposal restrictions (40 CFR 268.40). The analytical methodologies for these parameters will be the following: toluene (SW-846 Method 8240A), MEK (SW-846 Method 8240A), ethyl acetate (SW-846 Method 8015A modified). Once the oil heater is shut down and sufficiently cooled, technicians will remove the stack, the economizers, and the burner from the refractory. Wipe samples will be collected from the interior oil heater and stack, where accessible, to verify effectiveness of decontamination. A chip sample from the refractory bricks will be collected for laboratory analysis to ensure no residual waste is present. The chip sample will be analyzed for the following primary constituents of the waste: tetrahydrofuran (SW-846 Method 8240A), toluene (SW-846 Method 8240A), xylenes (SW-846 Method 8240A), MEK (SW-846 Method 8240A) and methanol (SW-846 Method 8015A). All residues will be removed and considered to be hazardous unless demonstrated to be otherwise through analytical testing.

The containment area will be visually inspected to ensure no cracks or breaches of integrity are present. Provided that no cracks are present, containment area surfaces will be pressure washed until visibly clean. In the unlikely event that cracks or breaches are identified at the time of RCRA closure, Bostik will assess the extent of any cracks and will evaluate the need to collect samples based on potential impacts to subsurface soils. Containment will be erected around the base of the oil heater. The cement base on which the heater sits will be decontaminated via pressure washing with a hot water and detergent solution. Following the detergent wash, the cement base will be rinsed three

times with water. A sample will be collected from the third rinse for laboratory analysis to determine the effectiveness of decontamination. Rinseate will be pumped from the containment structure to 55 gallon drums, located on polyethylene containment, where it will await characterization for disposal. It is estimated that approximately 100 – 200 gallons of rinseate will be generated from pressure washing the oil heater and concrete base. A chip sample from the concrete base will be collected for laboratory analyses to determine the effectiveness of decontamination. The chip sample will be analyzed for the following primary constituents of the waste: tetrahydrofuran (SW-846 Method 8240A), toluene (SW-846 Method 8240A), xylenes (SW-846 Method 8240A), MEK (SW-846 Method 8240A) and methanol (SW-846 Method 8015A).

In order to effect decontamination of the CEMS, ambient air will be drawn through the system for 24 hours following shutdown and cool-down of the oil heater.

Water used in the decontamination procedures will be collected, placed in containers and labeled. A representative sample of rinseate will be composited from the drums and sent for laboratory analysis for disposal purposes. The rinseate will be treated/disposed at an appropriate, licensed facility. Absorbent materials, polyethylene sheeting, used or spent personal protective equipment, etc. used during the decontamination procedures will be disposed off-site at an appropriate, licensed solid waste facility.

Once RCRA clean closure is verified, the oil heater may continue to be used for burning virgin fuels.

I.1.5.13 Closure of Containment Buildings

Bostik, Inc. does not manage hazardous waste in a containment building at the Middleton, MA facility. Therefore, this section does not apply.

I.2 Post-Closure Plans [40 CFR 270.14(b)(13)]

The oil heater and the four hazardous waste fuel storage tanks will be clean closed by removing all hazardous waste and contaminated equipment and structures, as appropriate. Following this RCRA closure, no hazardous waste will be treated, stored, or disposed of in the oil heater or the three hazardous waste fuel storage tanks. Therefore, RCRA post-closure requirements/cost estimates are not applicable to this facility.

I.3 Notices Required for Disposal Facilities [40 CFR 270.14(b)(13)]

Bostik, Inc. does not operate any hazardous waste disposal units at the Middleton, MA facility. Therefore, this section does not apply.

I.4 Closure Cost Estimate [40 CFR 270.14(b)(15); 264.142]

The estimated costs to close the Bostik, Inc. hazardous waste units are found in **Table I-2**. The closure costs are based on third party costs. RCRA closure activities include inventory removal and disposal off-site, decontamination, disposal of decontamination materials, sampling/analyses of rinseate, chip and wipe samples, and closure certification.

The cost of closure will be updated each year to reflect the effect of inflation or other factors. A copy of the closure cost estimate will be kept on file at the facility until closure is complete.

I.5 Financial Assurance for Closure [40 CFR 270.14(b)(15); 264.143; 264.151]

I.5.1 Closure Trust Fund

Bostik, Inc. is not seeking to establish a closure trust fund as the financial mechanism for closure. Therefore, this section does not apply.

I.5.2 Surety Bond

Bostik, Inc. is not seeking to establish a surety bond as the financial mechanism for closure. Therefore, this section does not apply.

I.5.3 Closure Letter of Credit

Bostik, Inc. has established a closure letter of credit as the financial mechanism for closure. A copy of the letter of credit is enclosed in **Attachment I-1**.

I.5.4 Closure Insurance

Bostik, Inc. is not seeking to obtain closure insurance as the financial mechanism for closure. Therefore, this section does not apply.

I.5.5 Financial Test and Corporate Guarantee for Closure

Bostik, Inc. is not seeking to use the financial test to demonstrate financial assurance for closure. Therefore, this section does not apply.

I.5.6 Use of Multiple Financial Mechanisms

Bostik, Inc. is not seeking the use of multiple financial mechanisms as the financial mechanism for closure. Therefore, this section does not apply.

I.5.7 Use of Multiple Financial Mechanisms for Multiple Facilities

Bostik, Inc. is not seeking the use of multiple financial mechanisms for multiple facilities as the financial mechanism for closure. Therefore, this section does not apply.

I.6 Post-Closure Cost Estimate [40 CFR 270.14(b)(16); 264.144]

The oil heater and four hazardous waste fuel storage tanks will be clean closed by removing all hazardous waste and contaminated equipment and structures, as appropriate. Following this closure, no hazardous waste will be treated, stored, or disposed of in the oil heater or four hazardous waste fuel storage tanks. Therefore, RCRA post-closure requirements/cost estimates are not applicable to this facility.

I.7 Financial Assurance Mechanism for Post-Closure Care [40 CFR 270.14(b)(16); 264.145; 264.151]

The oil heater and four hazardous waste fuel storage tanks will be clean closed by removing all hazardous waste and contaminated equipment and structures, as appropriate. Following this closure, no hazardous waste will be treated, stored, or disposed of in the oil heater or four hazardous waste fuel storage tanks. Therefore, RCRA post-closure requirements/cost estimates are not applicable to this facility.

I.8 Liability Requirements [40 CFR 270.14(b)(17); 264.147]

I.8.1 Coverage for Sudden Accidental Occurrences

Bostik, Inc. maintains liability coverage for sudden accidental occurrences in the amount of $3 million per occurrence with an annual aggregate of $6 million.

I.8.2 Coverage for Non-Sudden Accidental Occurrences

Bostik, Inc. does not manage hazardous waste in surface impoundments, landfills, land treatment facilities, or disposal miscellaneous units at the Middleton, MA facility. Therefore, no liability insurance is required for a non-sudden accidental occurrence.

I.8.3 Requests for Variance

Bostik, Inc. is not requesting any type of variance for adjusted level of required liability and therefore this section is not applicable.

I.9 Use of State-Required Mechanisms [40 CFR 270.14(b)(18)]

Bostik, Inc. uses mechanisms as provided for by the State regulations at 310 CMR 30.900.

Table I-1 Closure Schedule

Activity	Day
Notification of Closure to U.S. EPA and MADEP	-45
Receipt of Final Hazardous Waste Volume	0
Complete Removal, Treatment or Disposal of Waste Inventories	90
Complete Decontamination of Equipment and Structures	110
Complete Sampling and Analysis	150
Removal of Equipment and Structures, if Necessary	160
Disposal of Decontamination Water and Materials	180
Certification of Closure Submitted	240

Table I-2 Closure Cost Estimate – December 2006

Category / Activity	Amount	Units	Unit Cost ($)	Total Cost
Waste Transportation & Disposal				
Maximum Tank/Piping Inventory	28,850	gallons	$0.95	$27,408
Rinseate Transportation & Disposal	800	gallons	$1.50	$1,200
Non-Pumpable Sludge Disposal	10	drums	$280	$2,800
Solid Waste Disposal (non-hazardous absorbent materials, disposable PPE, etc.)	20	drums	$68	$1,360
			Subtotal:	**$32,768**
Decontamination Equipment & Sampling				
Equipment Rental	4	days	$275	$1,100
Rinseate Collection (Construction Materials)	3	days	$250	$750
Misc. Materials (tools, PPE)	60	--	$25	$1,500
Sampling & Analysis	21	samples	$500	$10,500
			Subtotal:	**$13,850**
Project Labor				
Operator Labor (Tanks, Containment, Rinseate Collection, Sampling & Disposal)	1,267	hours	$55	$69,685
Job Foreman / Supervisor Oversight	317	hours	$60	$19,020
Oversight Engineer	317	hours	$70	$22,190
Licensed Site Professional	17	hours	$80	$1,360
			Subtotal:	**$112,255**
TOTAL ESTIMATED COST OF CLOSURE:				**$158,873**

ATTACHMENT I-1

FINANCIAL ASSURANCE LETTER OF CREDIT

Copy

JPMorganChase

JPMorgan Chase Bank
600 Travis Street, Suite 1150
Houston, TX 77002
(713) 216-5793 (phone)
(713) 216-6927 (fax)

JPMorgan

Colette L. Potier
Trust Officer

Colette L. Potier
Trust Officer
Institutional Trust Services-Escrow
Colette.L.Potier@JPMChase.com

Colette L. Potier
Trust Officer

JPMorgan Chase Bank
Institutional Trust Services
600 Travis Street, Suite 1150
Houston, Texas 77002

Telephone: 713-216-5793
Facsimile: 713-216-6927
colette.l.potier@chase.com

VIA U.S. MAIL
Department of Environmental Protection
Attn: Eric Fahle
One Winter Street, 8th Floor
Boston, MA 02108

October 25, 2004

Re: Bostik Findley Amendment to Trust Agreement, Account 200046

Dear Mr. Fahle:

Please find attached an amended Trust Agreement for the benefit of Bostik Findley, Inc. Please sign the attached three originals and return two executed originals to my attention at the following address:

JPMorgan Chase Bank
Attn: Colette L. Potier
600 Travis Street, Suite 1150
Houston, TX 77002
(713) 216-5793 (phone)

If you have any questions or concerns or if I can be of further assistance, please contact me at your convenience (713) 216-5793.

Best regards,

Colette L. Potier
Trust Officer

CC: Bostik Findley, Inc.
w/attachments
Via U.S. Mail

Enclosures

Amendment to Trust Agreement

Whereas, Bostik Findley, Inc. ("Grantor"), formerly known as Bostik, Inc. and JP Morgan Chase Bank ("Trustee"), formerly know as Texas Commerce Bank, entered into a trust agreement ("Trust Agreement") dated June 11, 1992 hereby desire to amend the trust agreement.

Whereas, Section 16 of the trust agreement provides that amendments may be made by an instrument in writing executed by the Grantor, the Trustee and the Massachusetts Department of Environmental Protection ("Department"), formerly known as the Massachusetts Department of Environmental Quality Engineering.

Now, Therefore, Grantor, Trustee, and Benefactor hereby agree to amend the Trust Agreement by changing the party names as identified above and by including the revised Schedule A, B and C.

Bostik Findley, Inc.
(Grantor)

Kenneth Rader, VP and Secretary

Date: 9-20-04

JP Morgan Chase Bank
(Trustee)

Collette Potier, Trust Officer

Date: 9/24/04

Department of Environmental Protection
(Department)

Eric Fahle

Date:

Schedule A

IDENTIFICATION OF FACILITIES AND COST ESTIMATES

Listed below is a summary of the facilities, respective cost estimate amounts, and applicable permit numbers. The address for the listed facilities is:

Bostik Findley, Inc.
211 Boston Street
Middleton, MA 01949-2128

Facility	Permit Number	Amount
Bostik Findley, Inc. **211 Boston Street** **Middleton, MA 01949-2128**	**Hazardous Waste Storage Facility**	**$254,210.00**

CLOSURE PLAN FOR STORAGE TANKS AND INDUSTRIAL FURNACE IS ATTACHED TO SCHEDULE A

Schedule B

THE FUND

The Fund, consisting of the permitted properties is given below along with the mailing address for the listed facilities.

Bostik Findley, Inc.
211 Boston Street
Middleton, MA 01949-2128

Facility	Permit Number	Amount
Bostik Findley, Inc. **211 Boston Street** **Middleton, MA 01949-2128**	**Hazardous Waste** **Storage Facility**	**$254,210.00**

Schedule C

DESIGNATED SIGNATORIES

The Designated signatories, consisting of names and titles, are given below along with the mailing address for the listed facilities.

Bostik Findley, Inc.
211 Boston Street
Middleton, MA 01949-2128

NAME	TITLE
Michael A. Klonne	**President**
Kenneth C. Rader, Jr.	**Vice President and Chief Financial Officer**

Amendment to Trust Agreement

Whereas, Bostik Findley, Inc. ("Grantor"), formerly known as Bostik, Inc. and JP Morgan Chase Bank ("Trustee"), formerly know as Texas Commerce Bank, entered into a trust agreement ("Trust Agreement") dated June 11, 1992 hereby desire to amend the trust agreement.

Whereas, Section 16 of the trust agreement provides that amendments may be made by an instrument in writing executed by the Grantor, the Trustee and the Massachusetts Department of Environmental Protection ("Department"), formerly known as the Massachusetts Department of Environmental Quality Engineering.

Now, Therefore, Grantor, Trustee, and Benefactor hereby agree to amend the Trust Agreement by changing the party names as identified above and by including the revised Schedule A, B and C.

Bostik Findley, Inc.
(Grantor)

Kenneth Rader, VP and Secretary

Date: 9-30-04

JP Morgan Chase Bank
(Trustee)

Collette Potier, Trust Officer

Date: 10/4/04

Department of Environmental Protection
(Department)

Eric Fahle

Date:

Schedule A

IDENTIFICATION OF FACILITIES AND COST ESTIMATES

Listed below is a summary of the facilities, respective cost estimate amounts, and applicable permit numbers. The address for the listed facilities is:

Bostik Findley, Inc.
211 Boston Street
Middleton, MA 01949-2128

Facility	Permit Number	Amount
Bostik Findley, Inc. **211 Boston Street** **Middleton, MA 01949-2128**	**Hazardous Waste** **Storage Facility**	**$254,210.00**

CLOSURE PLAN FOR STORAGE TANKS AND INDUSTRIAL FURNACE IS ATTACHED TO SCHEDULE A

Schedule B

THE FUND

The Fund, consisting of the permitted properties is given below along with the mailing address for the listed facilities.

Bostik Findley, Inc.
211 Boston Street
Middleton, MA 01949-2128

Facility	Permit Number	Amount
Bostik Findley, Inc. **211 Boston Street** **Middleton, MA 01949-2128**	**Hazardous Waste Storage Facility**	**$254,210.00**

Schedule C

DESIGNATED SIGNATORIES

The Designated signatories, consisting of names and titles, are given below along with the mailing address for the listed facilities.

Bostik Findley, Inc.
211 Boston Street
Middleton, MA 01949-2128

NAME	TITLE
Michael A. Klonne	**President**
Kenneth C. Rader, Jr.	**Vice President and Chief Financial Officer**

Amendment to Trust Agreement

Whereas, Bostik Findley, Inc. ("Grantor"), formerly known as Bostik, Inc. and JP Morgan Chase Bank ("Trustee"), formerly know as Texas Commerce Bank, entered into a trust agreement ("Trust Agreement") dated June 11, 1992 hereby desire to amend the trust agreement.

Whereas, Section 16 of the trust agreement provides that amendments may be made by an instrument in writing executed by the Grantor, the Trustee and the Massachusetts Department of Environmental Protection ("Department"), formerly known as the Massachusetts Department of Environmental Quality Engineering.

Now, Therefore, Grantor, Trustee, and Benefactor hereby agree to amend the Trust Agreement by changing the party names as identified above and by including the revised Schedule A, B and C.

Bostik Findley, Inc.
(Grantor)

Kenneth Rader, VP and Secretary

Date: 9-30-04

JP Morgan Chase Bank
(Trustee)

Collette Potier, Trust Officer

Date: 10/4/04

Department of Environmental Protection
(Department)

Eric Fahle

Date:

Schedule A

IDENTIFICATION OF FACILITIES AND COST ESTIMATES

Listed below is a summary of the facilities, respective cost estimate amounts, and applicable permit numbers. The address for the listed facilities is:

Bostik Findley, Inc.
211 Boston Street
Middleton, MA 01949-2128

Facility	Permit Number	Amount
Bostik Findley, Inc. **211 Boston Street** **Middleton, MA 01949-2128**	**Hazardous Waste Storage Facility**	**$254,210.00**

CLOSURE PLAN FOR STORAGE TANKS AND INDUSTRIAL FURNACE IS ATTACHED TO SCHEDULE A

Schedule B

THE FUND

The Fund, consisting of the permitted properties is given below along with the mailing address for the listed facilities.

Bostik Findley, Inc.
211 Boston Street
Middleton, MA 01949-2128

Facility	Permit Number	Amount
Bostik Findley, Inc. **211 Boston Street** **Middleton, MA 01949-2128**	**Hazardous Waste Storage Facility**	**$254,210.00**

Schedule C

DESIGNATED SIGNATORIES

The Designated signatories, consisting of names and titles, are given below along with the mailing address for the listed facilities.

Bostik Findley, Inc.
211 Boston Street
Middleton, MA 01949-2128

NAME	TITLE
Michael A. Klonne	**President**
Kenneth C. Rader, Jr.	**Vice President and Chief Financial Officer**

Section J - Solid Waste Management Units

J.1 Characterization of SWMUs [40 CFR 270.14(d)(1)]

J.2 Releases [40 CFR 270.14(d)(2)]

Bostik's environmental remediation contractor, GEI Consultants of Winchester, MA, has prepared two recent documents that fully describe the status of past and present remediation efforts at the facility. **Attachment J-1** provides the table of contents and Executive Summary for the Phase V Status and Remedial Monitoring Report No. 11, dated November 6, 2006. **Attachment N-2** provides the Draft RCRA Corrective Action Environmental Indicator Forms sent to Mr. Frank Battaglia of U.S. EPA Region 1 on August 16, 2005.

ATTACHMENT J-1

GEI REPORT DATED NOVEMBER 6, 2006

GEI Consultants

Geotechnical
Environmental and
Water Resources
Engineering

RECEIVED
NOV 06 2006
DEP
NORTHEAST REGIONAL OFFICE

Environmental Report

Phase V Status and Remedial Monitoring Report No. 11

211 Boston Street, Middleton, MA
DEP RTN 3-1494

Submitted to:
Bostik, Inc.
211 Boston Street
Middleton, MA 01949

Submitted by:
GEI Consultants, Inc.
1021 Main Street
Winchester, MA 01890
781.721.4000

November 6, 2006

Project 01003

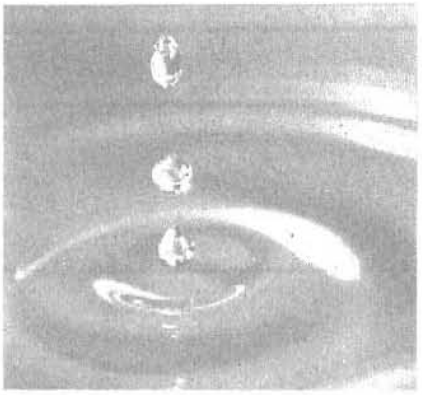

James R. Ash, P.E., LSP
Vice President

Table of Contents

Executive Summary iii

1. Introduction 1
- 1.1. Background 1
- 1.2. Purpose 3

2. Old Tank Farm Area 4
- 2.1. Description 4
- 2.2. Summary of OMM Activities 5
- 2.3. SVE/AS System Monitoring 5
- 2.4. Groundwater Sampling 5
- 2.5. Surface Water Sampling - Ipswich River 6
- 2.6. Summary of Current Conditions 6

3. Building 9 Area 8
- 3.1. Description 8
- 3.2. Summary of OMM Activities 8
- 3.3. SVE/AS System Monitoring 9
  - 3.3.1. SVE/AS Influent and Effluent Monitoring 10
  - 3.3.2. Soil Gas Monitoring 10
  - 3.3.3. Groundwater Sampling 11
- 3.4. Summary of Current Conditions 11

4. Building 1 Area 13
- 4.1. Description 13
- 4.2. SPH Gauging 14
- 4.3. SPH Recovery 14
- 4.4. Summary of Current Conditions 14

5. Planned Activities and Schedule 15
- 5.1. Old Tank Farm Area 15
- 5.2. Building 9 Area 15
- 5.3. Building 1 Area 16

6. Limitations 17

7. Acronyms 18

Tables

1. Groundwater Analytical Results – Old Tank Farm Area
2. Summary of Surface Water Sampling – Ipswich River
3. Summary of Soil Vapor Extraction Data – Old Tank Farm Area and Building 9 Area
4. Soil Vapor Extraction Trenches Contaminant Concentrations and Flows - Building 9 Area
5. Summary of Air Sparging Operation – Building 9 Area
6. Soil Gas Monitoring – Building 9 Area
7. Groundwater Analytical Results – Building 9 Area
8. Product Gauging and Recovery – Building 1 Area

Figures

1. Site Location Map
2. Areas Warranting Response Actions
3. Old Tank Farm Area Site Plan
4. Soil Vapor Extraction/Air Sparging System Layout
5. Building 1 Area Site Plan
6. Building 1 Area Detail

Appendices

A. Copy of DEP Transmittal Form
B. Laboratory Data Sheets
C. Summary of OTFA and Building 9 Area Groundwater Analytical Results Since 1996

PPK/JRA:jah
M:\PROJECT\2001\01003\Reports\06\Ph5 S&RM Rep11.doc

Executive Summary

GEI prepared this report on behalf of Bostik, Inc. (Bostik) for the property located at 211 Boston Street, Middleton, Massachusetts (the Site). This report was prepared in accordance with the Massachusetts Contingency Plan (MCP) 310 CMR 40.0000 and meets the requirements for a Phase V Status and Remedial Monitoring Report (Status Report) for a site that has achieved Remedy Operation Status (ROS) (310 CMR 40.0893) under the MCP. This report covers the period from April 1 through September 30, 2006 (Phase V Status and Remedial Monitoring Report No. 11).

The operation, maintenance, and monitoring (OMM) of remediation systems at the Site, and plans for future remediation activities, are summarized below by Site area. Phase V Status Report No. 12 will document operation of the remediation systems between October 1, 2006 and March 31, 2007, and will be submitted to the Massachusetts Department of Environmental Protection (DEP) by April 30, 2007.

The Old Tank Farm Area (OTFA) (Area 2)

Decreases in groundwater contaminant concentrations in the OTFA allowed: (1) Shutdown of the majority of the groundwater extraction (GWE) wells in November 2001; (2) Shutdown of all the GWE wells in September 2002; and (3) Shutdown of the soil vapor extraction and air sparging (SVE/AS) system in the OTFA in October 2002. Contaminants attributable to the OTFA have not been detected in the Ipswich River since shutdown of the systems.

We re-started the SVE/AS system around monitoring well MW503 in November 2003 because an increase in groundwater contaminant concentrations was measured in the well. In June 2006, we stopped air sparging (AS) around MW503, but continued performing SVE. We made this change so that AS could be focused on the Building 9 Area. In November 2003, we began purging groundwater from monitoring well MW503 on a regular basis to increase groundwater flow in the vicinity of the well. We stopped regular purging of well MW503 in December 2004 so that we could evaluate post-pumping conditions.

Groundwater monitoring data show that over the past three years contaminant concentrations in the OTFA have generally decreased or remained stable at levels approaching background conditions. At well MW503, contaminant concentrations were slightly lower during sampling in June 2006 and higher in September 2006.

We plan to stop performing SVE in the area of well MW503 so that SVE can be further focused on the Building 9 Area. Groundwater sampling will continue to be performed in the OTFA to document changes in contaminant concentrations.

The Building 9 Area (Area 6)

We have been operating an SVE/AS system in the Building 9 Area since November 2000. Contaminant concentrations in groundwater throughout most of the Building 9 Area have steadily decreased since SVE/AS began. Contaminants in groundwater do not appear to be migrating from the Building 9 Area to the OTFA. There was an increase in groundwater contaminant concentrations at five locations in the Building 9 Area during the recent monitoring period. These increases may be associated with seasonal variability.

The effluent from the SVE system was discharged without treatment because contaminant concentrations in the influent and effluent of the SVE system have been below the criteria established for treating the effluent.

We will continue to operate the SVE/AS system during the upcoming OMM period, and we will continue to perform groundwater sampling in the Building 9 Area to document changes in contaminant concentrations.

The Building 1 Area (Area 8)

Eight separate-phase hydrocarbon (SPH) recovery wells are located in the Building 1 Area. We performed oil recovery manually using a bailer and automatically using a belt skimmer. The belt skimmer is movable and has been operated in three different SPH recovery wells to date (RW3, RW5, and RW6).

During this monitoring period, we detected oil in recovery wells RW1, RW5, RW6, RW7, and RW8. Thicknesses ranged from 0.01 to 4.48 feet. We recovered approximately 13 gallons of oil during the recent monitoring period. During gauging from April through July 2006, a measurable thickness of oil was only observed in recovery wells RW1 and RW5. The absence of oil in most of the wells during this period may be the result of the oil recovery efforts or seasonal variability.

Monthly gauging of the SPH recovery wells is planned. Oil will be recovered using a bailer and the belt skimmer as warranted. The belt skimmer will be rotated from well to well as oil recovery rates warrant.

ATTACHMENT J-2

GEI SUBMITTAL DATED AUGUST 16, 2005

GEI Consultants

August 16, 2005
Project 01003

Geotechnical
Environmental and
Water Resources
Engineering

Mr. Frank Battaglia
U.S. EPA Region 1
One Congress Street, Suite 1100
Boston, MA 02114-2023

Dear Mr. Battaglia:

Re: Draft RCRA Corrective Action Environmental Indicator Forms
Bostik Findley, Inc.
211 Boston Street
Middleton, MA
MAD001039767

On behalf of our client, Bostik Findley, Inc. (Bostik), GEI is submitting the enclosed draft Documentation of Environmental Indicator (EI) Determination forms for "Current Human Exposures Under Control" and "Migration of Contaminated Groundwater Under Control." This submittal is an update to draft forms that were originally provided to you in 2000. Site figures are enclosed.

As indicated on these forms, it is our opinion that "Current Human Exposures Under Control" and "Migration of Contaminated Groundwater Under Control" has been achieved as a result of remediation that has been conducted at the subject property under the Massachusetts Contingency Plan (MCP; 310 CMR 40.0000).

Please call me at 781.721.4018 if you have any questions.

Sincerely,

GEI CONSULTANTS, INC.

James R. Ash, P.E., LSP
Vice President

JRA:lek
Enclosures
M:\PROJECT\2001\01003\Draft EI Submittal ltr.doc

www.geiconsultants.com

GEI Consultants, Inc.
1021 Main Street, Winchester, Massachusetts 01890-1970
781.721.4000 fax: 781.721.4073

DOCUMENTATION OF ENVIRONMENTAL INDICATOR DETERMINATION

Interim Final 2/5/99

RCRA Corrective Action
Environmental Indicator (EI) RCRIS code (CA725)

Current Human Exposures Under Control

Facility Name:	Bostik Findley, Inc.
Facility Address:	211 Boston Street, Middleton, MA 01949
Facility EPA ID #:	MAD001039767

1. Has **all** available relevant/significant information on known and reasonably suspected releases to soil, groundwater, surface water/sediments, and air, subject to RCRA Corrective Action (e.g., from Solid Waste Management Units (SWMU), Regulated Units (RU), and Areas of Concern (AOC)), been **considered** in this EI determination?

✓ If yes - check here and continue with #2 below.

____ If no - re-evaluate existing data, or

____ if data are not available skip to #6 and enter "IN" (more information needed) status code.

BACKGROUND

Definition of Environmental Indicators (for the RCRA Corrective Action)

Environmental Indicators (EI) are measures being used by the RCRA Corrective Action program to go beyond programmatic activity measures (e.g., reports received and approved, etc.) to track changes in the quality of the environment. The two EI developed to-date indicate the quality of the environment in relation to current human exposures to contamination and the migration of contaminated groundwater. An EI for non-human (ecological) receptors is intended to be developed in the future.

Definition of "Current Human Exposures Under Control" EI

A positive "Current Human Exposures Under Control" EI determination ("YE" status code) indicates that there are no "unacceptable" human exposures to "contamination" (i.e., contaminants in concentrations in excess of appropriate risk-based levels) that can be reasonably expected under current land- and groundwater-use conditions (for all "contamination" subject to RCRA corrective action at or from the identified facility (i.e., site-wide)).

Relationship of EI to Final Remedies

While Final remedies remain the long-term objective of the RCRA Corrective Action program the EI are near-term objectives which are currently being used as Program measures for the Government Performance and Results Act of 1993, GPRA). The "Current Human Exposures Under Control" EI are for reasonably expected human exposures under current land- and groundwater-use conditions ONLY, and do not consider potential future land- or groundwater-use conditions or ecological receptors. The RCRA Corrective Action program's overall mission to protect human health and the environment requires that Final remedies address these issues (i.e., potential future human exposure scenarios, future land and groundwater uses, and ecological receptors).

Duration / Applicability of EI Determinations

EI Determinations status codes should remain in RCRIS national database ONLY as long as they remain true (i.e., RCRIS status codes must be changed when the regulatory authorities become aware of contrary information).

2. Are groundwater, soil, surface water, sediments, or air **media** known or reasonably suspected to be **"contaminated"**[1] above appropriately protective risk-based "levels" (applicable promulgated standards, as well as other appropriate standards, guidelines, guidance, or criteria) from releases subject to RCRA Corrective Action (from SWMUs, RUs or AOCs)?

	Yes	No	?	Rationale / Key Contaminants
Groundwater	✓			Note A. Ref(s) 1,2.
Air (indoors)[2]	✓			Note B. Ref(s) 1,2.
Surface Soil (e.g., <2 ft)	✓			Note C. Ref(s) 3,4,5.
Surface Water		✓		Note D. Ref 1.
Sediment	✓			Note E. Ref 3.
Subsurf. Soil (e.g., >2 ft)	✓			Note F. Ref(s) 3,6,7.
Air (outdoors)	✓			Note G. Ref 5.

____ If no (for all media) - skip to #6, and enter "YE," status code after providing or citing appropriate "levels," and referencing sufficient supporting documentation demonstrating that these "levels" are not exceeded.

✓ If yes (for any media) - continue after identifying key contaminants in each "contaminated" medium, citing appropriate "levels" (or provide an explanation for the determination that the medium could pose an unacceptable risk), and referencing supporting documentation.

____ If unknown (for any media) - skip to #6 and enter "IN" status code.

Rationale and Reference(s):

Notes:
Refer to Figure 1 for references to site areas.
A. Groundwater from site wells located in the Building 9 area (Area 6) and Former Waste Disposal Area (Area 5) contain concentrations of C5-C8 aliphatics above the DEP MCP Method 1 human health risk-based standard GW-2. Groundwater from one well in Area 6 contains concentrations of C5-C8 aliphatics above GW-3.
B. Indoor air is reasonably expected to contain C5-C8 aliphatics due to it's presence in groundwater at concentrations above the DEP MCP Method 1 human health risk-based standard GW-2.
C. Exposure point concentrations calculated using soil data from 0 to 3 feet indicate that the compound C11-C22 aromatics is present in surface soil in one area of the Site (Area 11) at a concentration exceeding the DEP MCP Method 1 human health risk-based standard S1/GW3. PCBs were detected in one surface soil sample from Area 5 exceeding S1, S2, and S3 standards.
D. Contaminants have not been detected in surface water above DEP risk-based standards since shut down of the groundwater extraction and treatment system in September 2002.
E. Sediment samples contain concentrations of polychlorinated biphenyls (PCBs) ranging from 0.032 to 5.1 mg/kg.
F. Subsurface soil contains concentrations of PCBs, extractable petroleum hydrocarbons (EPH), and polycyclic aromatic hydrocarbons (PAHs) above DEP MCP Method 1 human health risk based standards (S1, S2, S3).
G. Contaminants may reasonably be suspected in outdoor air due to the presence of contaminants in groundwater.
References:
1. Phase V Inspection and Monitoring Report No. 8, Bostik Findley, Inc., April 28, 2005 by GEI Consultants, Inc. (GEI).
2. Technical Report for GEI Consultants, Inc., Bostik 01003, Accutest Job Number: M47062, May 19, 2005 by Accutest Laboratories (Accutest).
3. Phase II Comprehensive Site Assessment Addendum (CSA) Report, Bostik, Inc., November 1995, by GEI.
4. Self-Implementing On-site Cleanup and Disposal Plan, Bostik Findley, Inc., March 2003 by GEI.
5. Method 3 Risk Characterization Addendum, Bostik, Inc., April 27, 2000 by GEI.
6. Release Abatement Measure Completion Report, Building 1, Bostik, Inc., April 1997, by GEI.
7. PCB Cleanup Completion Report, Bostik Findley, Inc., January 2004, by GEI.
8. Phase III Remedial Action Plan, Bostik, Inc., December 29, 2000, by GEI.

Footnotes:

[1] "Contamination" and "contaminated" describes media containing contaminants (in any form, NAPL and/or dissolved, vapors, or solids, that are subject to RCRA) in concentrations in excess of appropriately protective risk-based "levels" (for the media, that identify risks within the acceptable risk range).

[2] Recent evidence (from the Colorado Dept. of Public Health and Environment, and others) suggest that unacceptable indoor air concentrations are more common in structures above groundwater with volatile contaminants than previously believed. This is a rapidly developing field and reviewers are encouraged to look to the latest guidance for the appropriate methods and scale of demonstration necessary to be reasonably certain that indoor air (in structures located above (and adjacent to) groundwater with volatile contaminants) does not present unacceptable risks.

3. Are there **complete pathways** between "contamination" and human receptors such that exposures can be reasonably expected under the current (land- and groundwater-use) conditions?

Summary Exposure Pathway Evaluation Table

	Potential **Human Receptors** (Under Current Conditions)						
Contaminated Media	Residents	Workers	Day-Care	Construction	Trespassers	Recreation	Food[3]
Groundwater	N	N	N	N			N
Air (indoors)	N	Y	N				
Soil (surface, e.g., <2 ft)	N	Y	N	Y	Y	N	N
~~Surface Water~~							
Sediment	Y	N			Y	Y	Y
Soil (subsurface e.g., >2 ft)				Y			N
Air (outdoors)	N	Y	N	Y	Y		

Instructions for Summary Exposure Pathway Evaluation Table:

1. Strike-out specific Media including Human Receptors' spaces for Media which are not "contaminated") as identified in #2 above.

2. enter "yes" or "no" for potential "completeness" under each "Contaminated" Media -- Human Receptor combination (Pathway).

Note: In order to focus the evaluation to the most probable combinations some potential "Contaminated" Media - Human Receptor combinations (Pathways) do not have check spaces ("___"). While these combinations may not be probable in most situations they may be possible in some settings and should be added as necessary.

____ If no (pathways are not complete for any contaminated media-receptor combination) - skip to #6, and enter "YE" status code, after explaining and/or referencing condition(s) in-place, whether natural or man-made, preventing a complete exposure pathway from each contaminated medium (e.g., use optional Pathway Evaluation Work Sheet to analyze major pathways).

✓ If yes (pathways are complete for any "Contaminated" Media - Human Receptor combination) - continue after providing supporting explanation.

____ If unknown (for any "Contaminated" Media - Human Receptor combination) - skip to #6 and enter "IN" status code

Rationale and Reference(s):

According to the site-specific risk assessments prepared for Bostik (Ref: 3, 5), potential human exposure pathways exist under current land and groundwater uses for all media except groundwater. Site groundwater is not a drinking water source and is not used for irrigation or process water. Construction workers are not expected to come into contact with site groundwater because construction excavations are typically dewatered preventing contact with groundwater. Contaminants are not detected above risk based levels in surface water, eliminating the pathway between contamination and human receptors for that media. The site is not currently used for residential, daycare, or agricultural purposes. Contaminated sediments are present in the Ipswich River, near residences. Depth to groundwater at the site is relatively shallow (ranging from approximately 4 to 10 feet) and contaminated groundwater is likely present beneath occupied site buildings, therefore providing a pathway to workers via indoor air.

[3] Indirect Pathway/Receptor (e.g., vegetables, fruits, crops, meat and dairy products, fish, shellfish, etc.)

4 Can the **exposures** from any of the complete pathways identified in #3 be reasonably expected to be **"significant"**[4] (i.e., potentially "unacceptable" because exposures can be reasonably expected to be: 1) greater in magnitude (intensity, frequency and/or duration) than assumed in the derivation of the acceptable "levels" (used to identify the "contamination"); or 2) the combination of exposure magnitude (perhaps even though low) and contaminant concentrations (which may be substantially above the acceptable "levels") could result in greater than acceptable risks)?

✓ If no (exposures can not be reasonably expected to be significant (i.e., potentially "unacceptable") for any complete exposure pathway) - skip to #6 and enter "YE" status code after explaining and/or referencing documentation justifying why the exposures (from each of the complete pathways) to "contamination" (identified in #3) are not expected to be "significant."

____ If yes (exposures could be reasonably expected to be "significant" (i.e., potentially "unacceptable") for any complete exposure pathway) - continue after providing a description (of each potentially "unacceptable" exposure pathway) and explaining and/or referencing documentation justifying why the exposures (from each of the remaining complete pathways) to "contamination" (identified in #3) are not expected to be "significant."

____ If unknown (for any complete pathway) - skip to #6 and enter "IN" status code

Rationale and Reference(s):

Refer to Figure 1 for references to site areas.
Based on the Method 3 Risk Characterization Addendum Report (Ref. 5) and/or data collected since preparation of the Method 3 Risk Characterization Addendum Report (Ref. 1,2) prepared for the site, the following are NOT considered significant exposures:

• Indoor Air: Concentrations of C5-C8 aliphatics in groundwater were found to exceed the MCP GW-2 standard in one well in Area 5 and in several wells in Area 6. The well in Area 5 where the GW-2 standard for C5-C8 aliphatics is exceeded is located greater than 200 feet upgradient from the nearest occupied building. Also, concentrations of C5-C8 aliphatics in groundwater from wells in Area 5 located downgradient from the well where the GW-2 standard for C5-C8 aliphatics was exceeded and upgradient from occupied buildings are below the GW-2 standard. Therefore, the concentration of C5-C8 aliphatics in indoor air as a result of the presence of C5-C8 aliphatics in groundwater from Area 5 is not expected to result in a significant indoor air exposure to site workers.

The wells in Area 6 where concentrations of C5-C8 aliphatics in groundwater exceed the GW-2 standards are located downgradient from occupied buildings. There are no occupied buildings located downgradient from these wells. One well where the GW-2 standard for C5-C8 aliphatics is exceeded is located within 30 feet of an upgradient occupied building (Bldg. 9). However, a soil vapor extraction/air sparging trench is located between that well and Bldg. 9. Also, a well located between the SVE/AS trench and Bldg. 9 contains concentrations of C5-C8 aliphatics below the GW-2 standard. Therefore, concentrations of C5-C8 aliphatics in groundwater beneath the building are not expected to exceed GW-2 standards and are therefore not expected to result in a significant indoor air exposure to site workers.

In any event, as EPA Region 1 interprets recent EPA vapor intrusion guidance, for the purpose of the Environmental Indicator determinations, risk management of occupational exposures at industrial sites arising from the vapor intrusion pathway is deferred to the Occupational Health and Safety Administration (OSHA).

• Surface Soil: The site worker, site landscaper and site trespasser exposure to surface soil (0-3 feet) was considered in the Method 3 Risk Characterization and found to be insignificant.
• Sediment: The site construction worker, site trespasser, and resident exposure to sediments was considered in the Method 3 Risk Characterization and found to be insignificant.
• Subsurface Soil: The estimated Hazard Index for construction worker exposure to subsurface soil exceeded DEP's target risk level based on available data collected prior to 2000 (Ref. 5). The primary driver was exposure to PCB contaminated soil in Area 5 of the Site. However, a risk-based remedial goal was developed for PCBs in soil in Area 5 and a target cleanup concentration was selected (Ref. 8). In 2003, Bostik excavated PCB contaminated soil from Area 5 reducing PCB concentrations in soil in Area to concentrations well below the risk-based remedial goal (Ref. 7).
• Outdoor Air: The site worker, site landscaper, site utility worker, site construction worker, and site trespasser exposure to ambient air was considered in the Method 3 Risk Characterization and found to be insignificant.

[4] If there is any question on whether the identified exposures are "significant" (i.e., potentially "unacceptable") consult a human health Risk Assessment specialist with appropriate education, training and experience.

5 Can the "significant" **exposures** (identified in #4) be shown to be within **acceptable** limits?

_____ If yes (all "significant" exposures have been shown to be within acceptable limits) - continue and enter "YE" after summarizing and referencing documentation justifying why all "significant" exposures to "contamination" are within acceptable limits (e.g., a site-specific Human Health Risk Assessment).

_____ If no (there are current exposures that can be reasonably expected to be "unacceptable")- continue and enter "NO" status code after providing a description of each potentially "unacceptable" exposure.

_____ If unknown (for any potentially "unacceptable" exposure) - continue and enter "IN" status code

Rationale and Reference(s):

6. Check the appropriate RCRIS status codes for the Current Human Exposures Under Control EI event code (CA725), and obtain Supervisor (or appropriate Manager) signature and date on the EI determination below (and attach appropriate supporting documentation as well as a map of the facility):

✓ YE - Yes, "Current Human Exposures Under Control" has been verified. Based on a review of the information contained in this EI Determination, "Current Human Exposures" are expected to be "Under Control" at the Bostik Findley, Inc. facility, EPA ID # MAD001039767, located at 211 Boston St., Middleton, MA under current and reasonably expected conditions. This determination will be re-evaluated when the Agency/State becomes aware of significant changes at the facility.

____ NO - "Current Human Exposures" are NOT "Under Control."

____ IN - More information is needed to make a determination.

Completed by (signature) _____ Date _____
(print) _____
(title) _____

Supervisor (signature) _____ Date _____
(print) _____
(title) _____
(EPA Region or State) _____

Locations where References may be found:

MADEP Northeast Region File Facility
35 Congress Street
Shetland Office Park
Salem, MA 01970
DEP RTN 3-1494

Ref #2 available at:
GEI Consultants, Inc.
1021 Main Street
Winchester, MA 01890

Ref #2 attached.

Contact telephone and e-mail numbers

(name) James R. Ash
(phone #) 781.721.4000
(e-mail) jash@geiconsultants.com

FINAL NOTE: THE HUMAN EXPOSURES EI IS A QUALITATIVE SCREENING OF EXPOSURES AND THE DETERMINATIONS WITHIN THIS DOCUMENT SHOULD NOT BE USED AS THE SOLE BASIS FOR RESTRICTING THE SCOPE OF MORE DETAILED (E.G., SITE-SPECIFIC) ASSESSMENTS OF RISK.

Facility Name: Bostik Findley, Inc.
EPA ID#: MAD001039767
City/State: Middleton, MA

CURRENT HUMAN EXPOSURES UNDER CONTROL (CA 725)

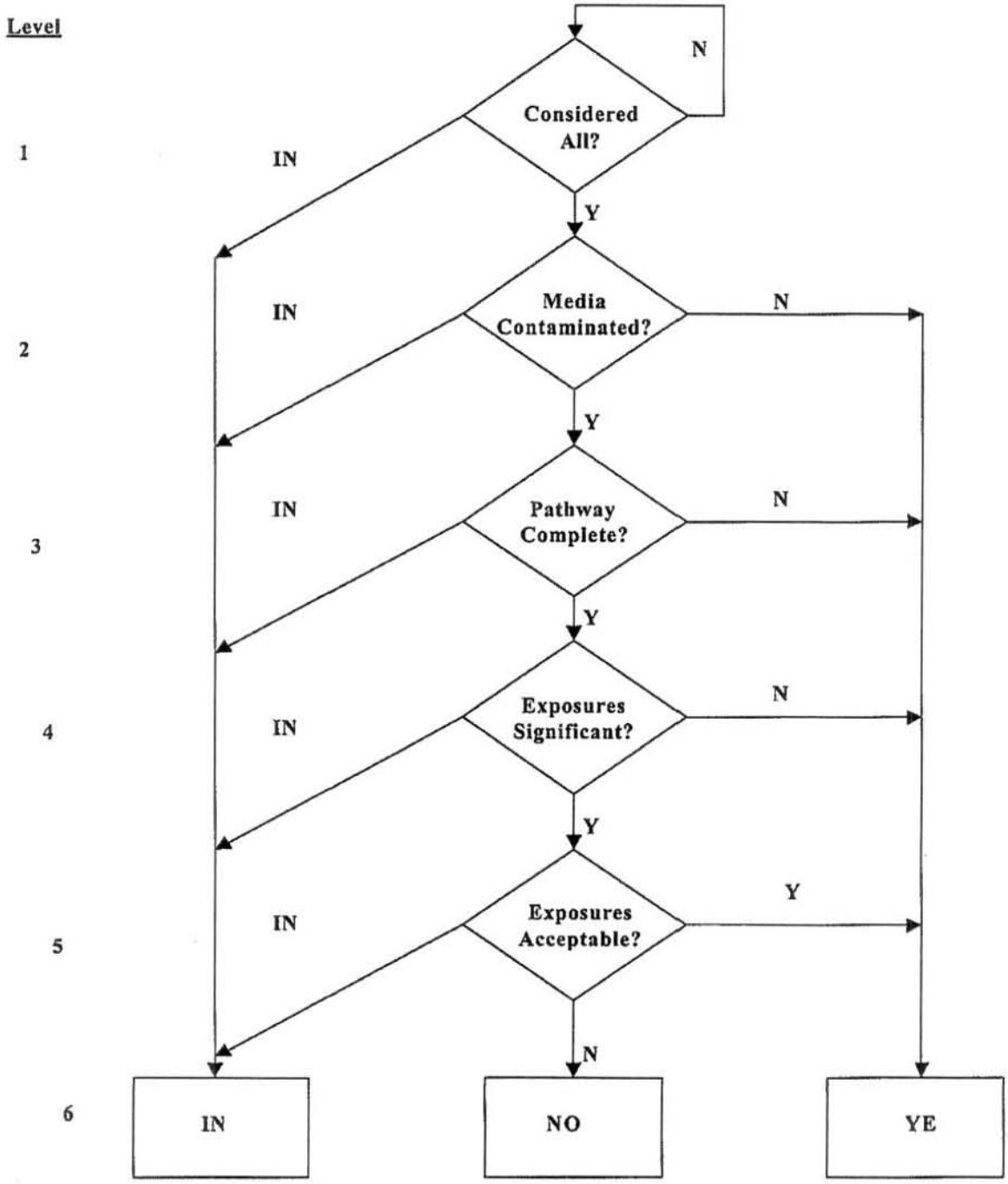

DOCUMENTATION OF ENVIRONMENTAL INDICATOR DETERMINATION

Interim Final 2/5/99

RCRA Corrective Action
Environmental Indicator (EI) RCRIS code (CA750)

Migration of Contaminated Groundwater Under Control

Facility Name: Bostik Findley, Inc.
Facility Address: 211 Boston Street, Middleton, MA 01949
Facility EPA ID #: MAD001039767

1. Has **all** available relevant/significant information on known and reasonably suspected releases to the groundwater media, subject to RCRA Corrective Action (e.g., from Solid Waste Management Units (SWMU), Regulated Units (RU), and Areas of Concern (AOC)), been **considered** in this EI determination?

✓ If yes - check here and continue with #2 below.

____ If no - re-evaluate existing data, or

____ if data are not available, skip to #8 and enter "IN" (more information needed) status code.

BACKGROUND

Definition of Environmental Indicators (for the RCRA Corrective Action)

Environmental Indicators (EI) are measures being used by the RCRA Corrective Action program to go beyond programmatic activity measures (e.g., reports received and approved, etc.) to track changes in the quality of the environment. The two EI developed to-date indicate the quality of the environment in relation to current human exposures to contamination and the migration of contaminated groundwater. An EI for non-human (ecological) receptors is intended to be developed in the future.

Definition of "Migration of Contaminated Groundwater Under Control" EI

A positive "Migration of Contaminated Groundwater Under Control" EI determination ("YE" status code) indicates that the migration of "contaminated" groundwater has stabilized, and that monitoring will be conducted to confirm that contaminated groundwater remains within the original "area of contaminated groundwater" (for all groundwater "contamination" subject to RCRA corrective action at or from the identified facility (i.e., site-wide)).

Relationship of EI to Final Remedies

While Final remedies remain the long-term objective of the RCRA Corrective Action program the EI are near-term objectives which are currently being used as Program measures for the Government Performance and Results Act of 1993, GPRA). The "Migration of Contaminated Groundwater Under Control" EI pertains ONLY to the physical migration (i.e., further spread) of contaminated ground water and contaminants within groundwater (e.g., non-aqueous phase liquids or NAPLs). Achieving this EI does not substitute for achieving other stabilization or final remedy requirements and expectations associated with sources of contamination and the need to restore, wherever practicable, contaminated groundwater to be suitable for its designated current and future uses.

Duration / Applicability of EI Determinations

EI Determinations status codes should remain in RCRIS national database ONLY as long as they remain true (i.e., RCRIS status codes must be changed when the regulatory authorities become aware of contrary information).

2. Is **groundwater** known or reasonably suspected to be **"contaminated"**[1] above appropriately protective "levels" (i.e., applicable promulgated standards, as well as other appropriate standards, guidelines, guidance, or criteria) from releases subject to RCRA Corrective Action, anywhere at, or from, the facility?

✓ If yes - continue after identifying key contaminants, citing appropriate "levels," and referencing supporting documentation.

____ If no - skip to #8 and enter "YE" status code, after citing appropriate "levels," and referencing supporting documentation to demonstrate that groundwater is not "contaminated."

____ If unknown - skip to #8 and enter "IN" status code.

Rationale and Reference(s):

Refer to Figure 1 for references to site areas.
Groundwater from one site well located in the Building 9 area (Area 6) contains concentrations of C5-C8 aliphatics above the DEP MCP Method 1 human health risk-based standard GW-3, which applies to groundwater that is considered a potential source of discharge to surface water (Ref. 1). Concentrations of contaminants in groundwater in the Former Waste Disposal Area (Area 5) have not been found to exceed GW-3 standards since remediation of Area 5 in 2003 (Ref. 2, 3).

References:

1. Phase V Inspection and Monitoring Report No. 8, Bostik Findley, Inc., April 28, 2005 by GEI Consultants, Inc. (GEI).
2. Technical Report for GEI Consultants, Inc., Bostik 01003, Accutest Job Number: M47062, May 19, 2005 by Accutest Laboratories (Accutest).
3. PCB Cleanup Completion Report, Bostik Findley, Inc., January 2004, by GEI.
4. Phase II Comprehensive Site Assessment Addendum (CSA) Report, Bostik, Inc., November 1995, by GEI.

Footnotes:

[1]"Contamination" and "contaminated" describes media containing contaminants (in any form, NAPL and/or dissolved, vapors, or solids, that are subject to RCRA) in concentrations in excess of appropriate "levels" (appropriate for the protection of the groundwater resource and its beneficial uses).

3. Has the **migration** of contaminated groundwater **stabilized** (such that contaminated groundwater is expected to remain within "existing area of contaminated groundwater"[2] as defined by the monitoring locations designated at the time of this determination)?

✓ If yes - continue, after presenting or referencing the physical evidence (e.g., groundwater sampling/measurement/migration barrier data) and rationale why contaminated groundwater is expected to remain within the (horizontal or vertical) dimensions of the "existing area of groundwater contamination"[2]).

____ If no (contaminated groundwater is observed or expected to migrate beyond the designated locations defining the "existing area of groundwater contamination"[2]) - skip to #8 and enter "NO" status code, after providing an explanation.

____ If unknown - skip to #8 and enter "IN" status code.

Rationale and Reference(s):

The primary contaminants in Area 6 groundwater are volatile organic compounds and volatile petroleum hydrocarbons. A soil vapor extraction/air sparging (SVE/AS) system has been operating in Area 6 since 2000. Groundwater samples are collected from wells downgradient from Area 6 on a quarterly basis to evaluate whether contamination from Area 6 is migrating. Except for very low concentrations of C5-C8 aliphatics (well below the GW-3 standard) detected in one well downgradient from Area 6, contaminants have not been detected above laboratory reporting limits in the wells sampled downgradient from Area 6.

[2] "existing area of contaminated groundwater" is an area (with horizontal and vertical dimensions) that has been verifiably demonstrated to contain all relevant groundwater contamination for this determination, and is defined by designated (monitoring) locations proximate to the outer perimeter of "contamination" that can and will be sampled/tested in the future to physically verify that all "contaminated" groundwater remains within this area, and that the further migration of "contaminated" groundwater is not occurring. Reasonable allowances in the proximity of the monitoring locations are permissible to incorporate formal remedy decisions (i.e., including public participation) allowing a limited area for natural attenuation.

4. Does "contaminated" groundwater **discharge** into **surface water** bodies?

✓ If yes - continue after identifying potentially affected surface water bodies.

____ If no - skip to #7 (and enter a "YE" status code in #8, if #7 = yes) after providing an explanation and/or referencing documentation supporting that groundwater "contamination" does not enter surface water bodies.

____ If unknown - skip to #8 and enter "IN" status code.

Rationale and Reference(s):

The Bostik site is bounded to the north by the Ipswich River. Site groundwater flow is to the north/northeast toward the Ipswich River. The Ipswich River is the point of general groundwater discharge from the site (Ref. 4).

5. Is the **discharge** of "contaminated" groundwater into surface water likely to be **"insignificant"** (i.e., the maximum concentration[3] of each contaminant discharging into surface water is less than 10 times their appropriate groundwater "level," and there are no other conditions (e.g., the nature, and number, of discharging contaminants, or environmental setting), which significantly increase the potential for unacceptable impacts to surface water, sediments, or eco-systems at these concentrations)?

✓ If yes - skip to #7 (and enter "YE" status code in #8 if #7 = yes), after documenting: 1) the maximum known or reasonably suspected concentration[3] of key contaminants discharged above their groundwater "level," the value of the appropriate "level(s)," and if there is evidence that the concentrations are increasing; and 2) provide a statement of professional judgement/explanation (or reference documentation) supporting that the discharge of groundwater contaminants into the surface water is not anticipated to have unacceptable impacts to the receiving surface water, sediments, or eco-system.

____ If no - (the discharge of "contaminated" groundwater into surface water is potentially significant) - continue after documenting: 1) the maximum known or reasonably suspected concentration[3] of each contaminant discharged above its groundwater "level," the value of the appropriate "level(s)," and if there is evidence that the concentrations are increasing; and 2) for any contaminants discharging into surface water in concentrations[3] greater than 100 times their appropriate groundwater "levels," the estimated total amount (mass in kg/yr) of each of these contaminants that are being discharged (loaded) into the surface water body (at the time of the determination), and identify if there is evidence that the amount of discharging contaminants is increasing.

____ If unknown - enter "IN" status code in #8.

Rationale and Reference(s):

The maximum concentration of C5-C8 aliphatics detected in monitoring wells located just upgradient from the Ipswich River and downgradient from the contaminant source areas since June 2004 is 367 ug/l, which is less than 10 times the GW-3 standard for C5-C8 aliphatics of 4,000 ug/l (Ref. 1). Key contaminants have not been detected above laboratory limits in surface water samples collected since shutdown of the groundwater extraction and treatment system in 2002 (Ref. 1).

[3] As measured in groundwater prior to entry to the groundwater-surface water/sediment interaction (e.g., hyporheic) zone.

6. Can the **discharge** of "contaminated" groundwater into surface water be shown to be "**currently acceptable**" (i.e., not cause impacts to surface water, sediments or eco-systems that should not be allowed to continue until a final remedy decision can be made and implemented[4])?

_____ If yes - continue after either: 1) identifying the Final Remedy decision incorporating these conditions, or other site-specific criteria (developed for the protection of the site's surface water, sediments, and eco-systems), and referencing supporting documentation demonstrating that these criteria are not exceeded by the discharging groundwater; OR
2) providing or referencing an interim-assessment,[5] appropriate to the potential for impact, that shows the discharge of groundwater contaminants into the surface water is (in the opinion of a trained specialists, including ecologist) adequately protective of receiving surface water, sediments, and eco-systems, until such time when a full assessment and final remedy decision can be made. Factors which should be considered in the interim-assessment (where appropriate to help identify the impact associated with discharging groundwater) include: surface water body size, flow, use/classification/habitats and contaminant loading limits, other sources of surface water/sediment contamination, surface water and sediment sample results and comparisons to available and appropriate surface water and sediment "levels," as well as any other factors, such as effects on ecological receptors (e.g., via bio-assays/benthic surveys or site-specific ecological Risk Assessments), that the overseeing regulatory agency would deem appropriate for making the EI determination.

_____ If no - (the discharge of "contaminated" groundwater can not be shown to be "**currently acceptable**") - skip to #8 and enter "NO" status code, after documenting the currently unacceptable impacts to the surface water body, sediments, and/or eco-systems.

_____ If unknown - skip to 8 and enter "IN" status code.

Rationale and Reference(s):

[4] Note, because areas of inflowing groundwater can be critical habitats (e.g., nurseries or thermal refugia) for many species, appropriate specialist (e.g., ecologist) should be included in management decisions that could eliminate these areas by significantly altering or reversing groundwater flow pathways near surface water bodies.

[5] The understanding of the impacts of contaminated groundwater discharges into surface water bodies is a rapidly developing field and reviewers are encouraged to look to the latest guidance for the appropriate methods and scale of demonstration to be reasonably certain that discharges are not causing currently unacceptable impacts to the surface waters, sediments or eco-systems.

7. Will groundwater **monitoring** / measurement data (and surface water/sediment/ecological data, as necessary) be collected in the future to verify that contaminated groundwater has remained within the horizontal (or vertical, as necessary) dimensions of the "existing area of contaminated groundwater?"

✓ If yes - continue after providing or citing documentation for planned activities or future sampling/measurement events. Specifically identify the well/measurement locations which will be tested in the future to verify the expectation (identified in #3) that groundwater contamination will not be migrating horizontally (or vertically, as necessary) beyond the "existing area of groundwater contamination."

____ If no - enter "NO" status code in #8.

____ If unknown - enter "IN" status code in #8.

Rationale and
Reference(s):

The Bostik site is currently in Massachusetts Contingency Plan (MCP, 310 CMR 40.0000) Phase V and is operating under Remedy Operation Status (ROS) (310 CMR 40.0893). Future groundwater and surface water sampling to verify that groundwater contamination is not migrating horizontally is planned as part of Phase V Inspection and Monitoring activities. Future groundwater sampling includes quarterly sampling of monitoring wells within the Old Tank Farm Area (Area 2) and Area 6, including WP2, WP3, WP4, WP6, WP35, WP37, WP39, MW503, GW3, GW4, MW110R, MW206, MW608, and MW610 (Figure 2). Quarterly sampling of surface water from locations upstream, adjacent to and downstream of Area 2 will also continue (Ref. 1).

8. Check the appropriate RCRIS status codes for the Migration of Contaminated Groundwater Under Control EI (event code CA750), and obtain Supervisor (or appropriate Manager) signature and date on the EI determination below (attach appropriate supporting documentation as well as a map of the facility).

✓ YE - Yes, "Migration of Contaminated Groundwater Under Control" has been verified. Based on a review of the information contained in this EI determination, it has been determined that the "Migration of Contaminated Groundwater" is "Under Control" at the Bostik Findley, Inc. facility, EPA ID # MAD001039767, located at 211 Boston St., Middleton, MA. Specifically, this determination indicates that the migration of "contaminated" groundwater is under control, and that monitoring will be conducted to confirm that contaminated groundwater remains within the "existing area of contaminated groundwater" This determination will be re-evaluated when the Agency becomes aware of significant changes at the facility.

____ NO - Unacceptable migration of contaminated groundwater is observed or expected.

____ IN - More information is needed to make a determination.

Completed by (signature) _____ Date _____
(print) _____
(title) _____

Supervisor (signature) _____ Date _____
(print) _____
(title) _____
(EPA Region or State) _____

Locations where References may be found:

MADEP Northeast Region File Facility
35 Congress Street
Shetland Office Park
Salem, MA 01970
DEP RTN 3-1494

Ref #2 available at:
GEI Consultants, Inc.
1021 Main Street
Winchester, MA 01890

Contact telephone and e-mail numbers

(name) James R. Ash
(phone #) 781.721.4000
(e-mail) jash@geiconsultants.com

Facility Name: Bostik Findley, Inc.
EPA ID#: MAD001039767
City/State: Middleton, MA

MIGRATION OF CONTAMINATED GROUNDWATER UNDER CONTROL (CA 750)

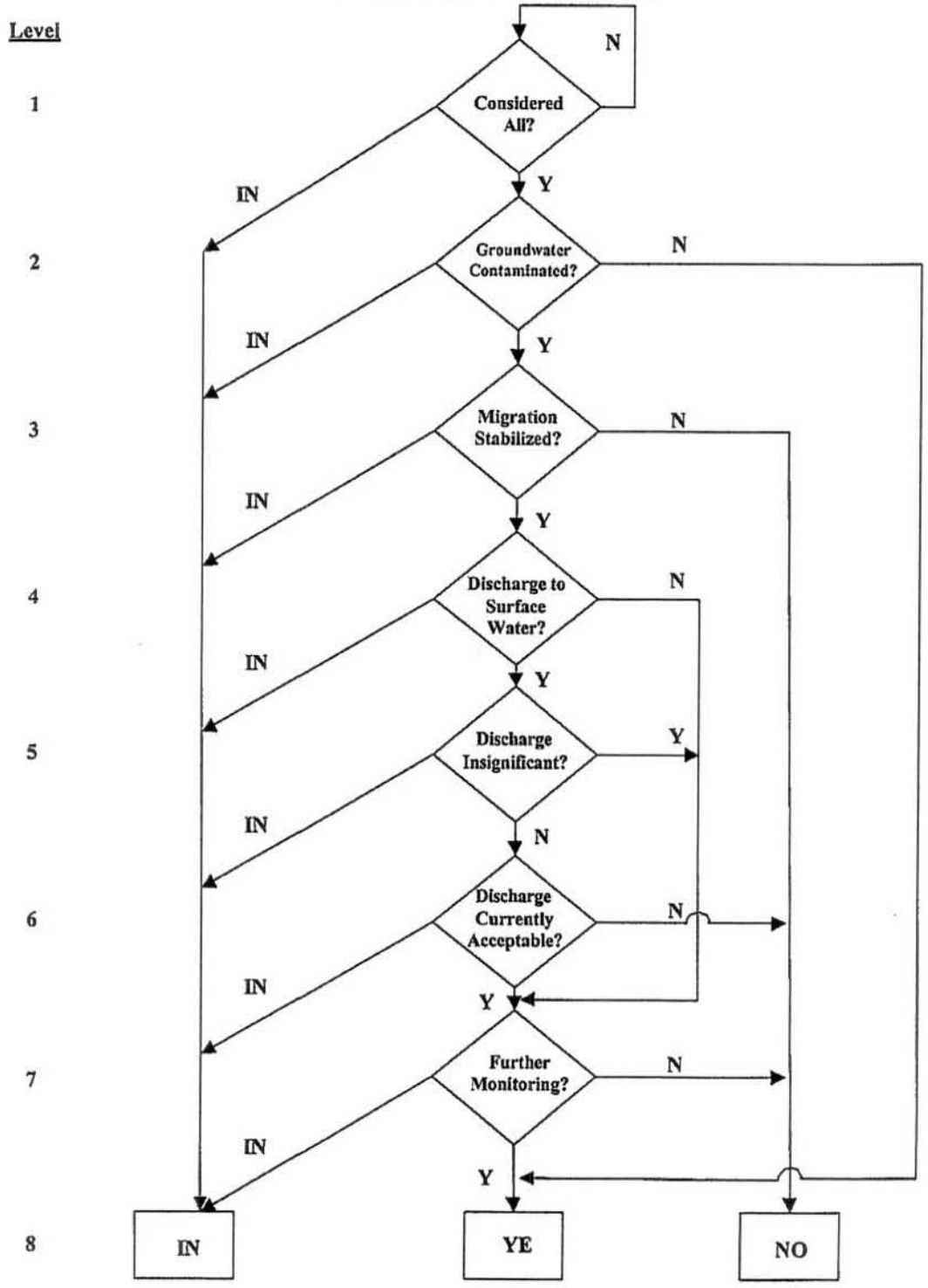

// Signed 2/5/99 //

MEMORANDUM

SUBJECT: Interim-Final Guidance for RCRA Corrective Action Environmental Indicators

FROM: Elizabeth Cotsworth, Acting Director
Office of Solid Waste

TO: RCRA Senior Policy Managers
Regions I-X

The RCRA corrective action program and achievement of its Government Performance Results Act (GPRA) goals are of highest priority for the national RCRA program. The RCRA program is using two Environmental Indicators (EI) to measure program performance for GPRA purposes: (1) Current Human Exposures Under Control (CA725), and (2) Migration of Contaminated Groundwater Under Control (CA750).

With this memorandum I am transmitting revised guidance on how to determine if a facility has met the RCRA corrective action Environmental Indicators (EI). This Interim-Final guidance will replace the existing EI guidance (from 1994 and 1995) and will remain the working guidance for at least one year. The Interim-Final guidance is similar to the earlier guidance but has been modified to facilitate more consistent determinations (across regions and states) and to be more explicit with regard to the minimum level of documentation required to ensure that the determinations will be verifiable.

This guidance has been developed with the cooperation and input of representatives from all ten EPA regions and at least one state from each region. The guidance is in the form of questions to be answered in making an EI determination. The questions and answer options express the minimum criteria for EI determinations and are not to be modified for regional, state or site-specific conditions. The "Rationale" portion of the forms can be filled in to explain unique situations to any length necessary. While the signed hard-copies of these forms should reside in the facility's administrative files, these forms should also be kept in electronic format that can be posted on an "EI database" web site to be developed by the Office of Solid Waste in the near future. The "EI database" will help communicate successes and provide examples for overcoming barriers to progress.

Thank you for your assistance with this important effort. If you have any questions, please call Bob Hall or Henry Schuver of my staff at (703) 308-8432 or 308-8656 respectively.

Attachment

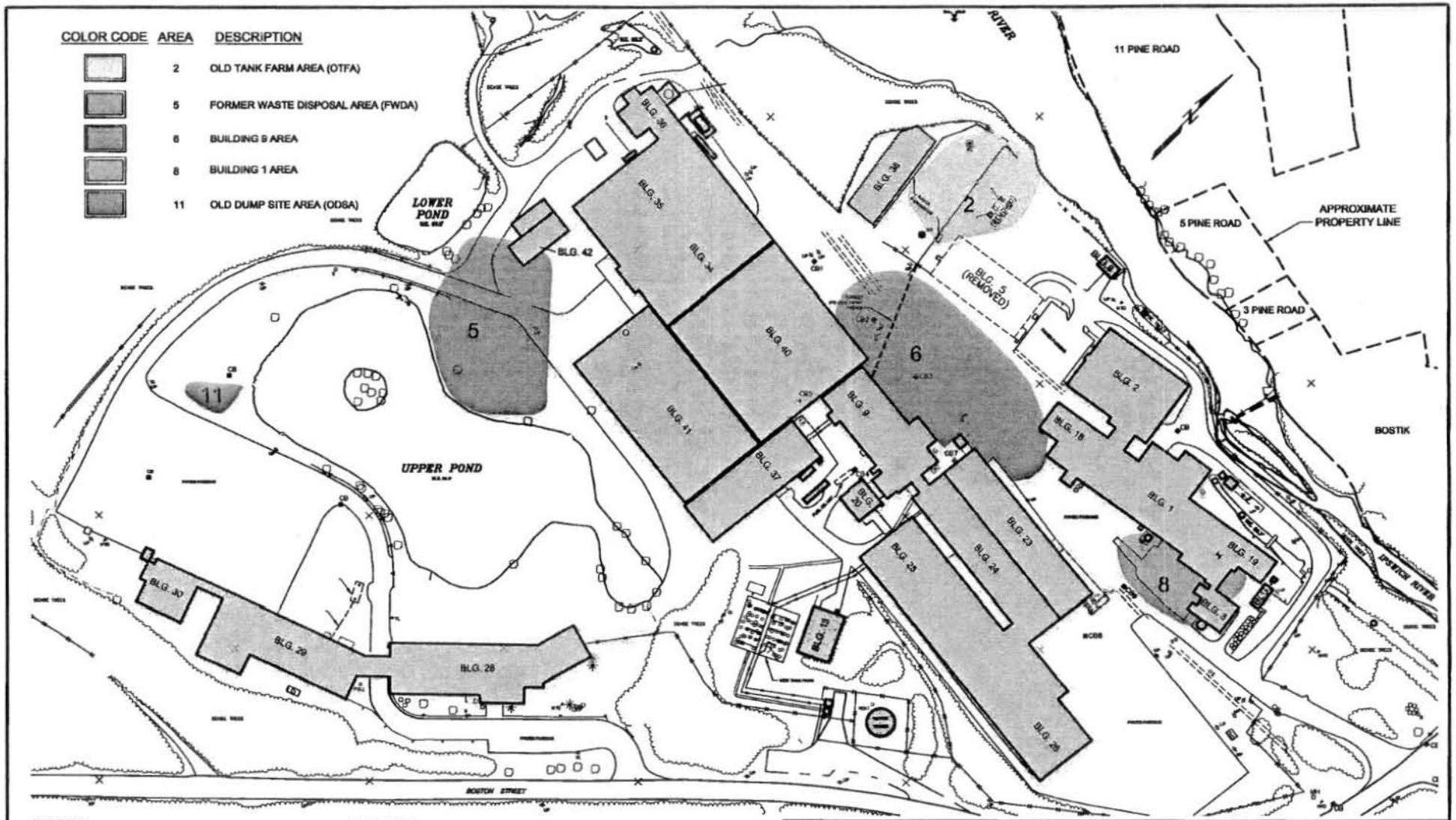

NOTES:

1. THE COLORED AREAS SHOW APPROXIMATE LOCATIONS. THE BOUNDARIES OF THE COLORED AREAS ARE NOT AN INDICATION OF THE ESTIMATED EXTENT OF CONTAMINATION.

LEGEND:

CB CATCH BASIN LOCATION

NPDES OUTFALL

=== FORMER RAILROAD TRACKS

0 120 240

SCALE, FEET

Documentation of Environmental Indicator Determination	GEI Consultants	SITE MAP
Bostik Findley, Inc. Middleton, Massachusetts	Project 01003	June 2005 Fig. 1

01003-131 ptc/djm/jam 8/23/05

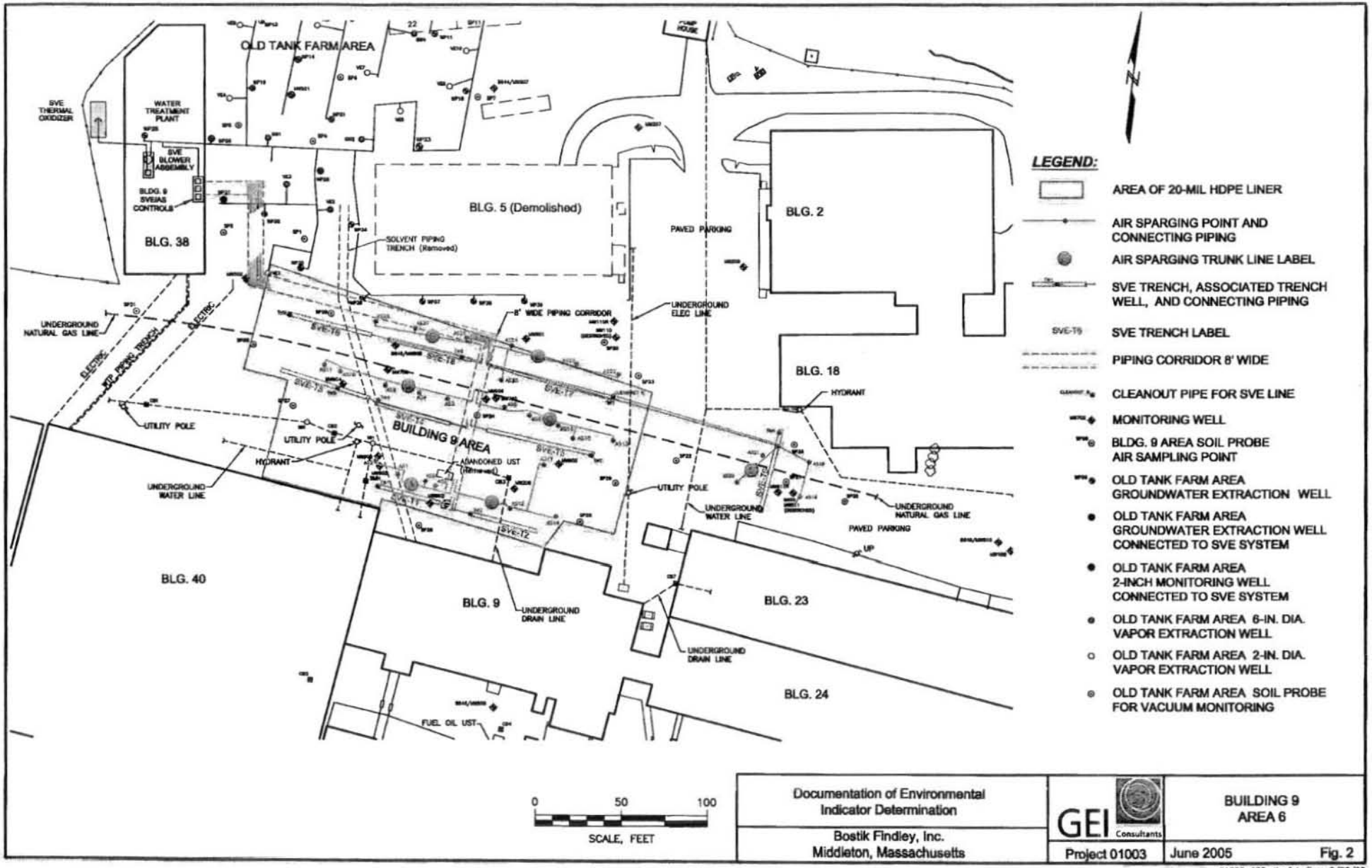

Documentation of Environmental Indicator Determination	GEI Consultants	BUILDING 9 AREA 6	
Bostik Findley, Inc. Middleton, Massachusetts	Project 01003	June 2005	Fig. 2

01003-130 djm/ptc/jam 6/23/05

Section K - Other Federal Laws

K.1 Other Federal Laws [40 CFR 270.14(b)(20) and 270.3]

40 CFR Part 270.3 requires consideration of federal laws that may apply to the issuance of permits under the RCRA rules. Bostik, Inc.'s Middleton, MA facility is in compliance with the following laws:

The Wild and Scenic Rivers Act. (16 U.S.C. 1273 et seq.) Section 7 of the Act prohibits the Regional administrator from assisting by license or otherwise the construction of any water resources project that would have a direct, adverse effect on the values for which a national wild and scenic river was established. This permit application does not call for construction of a water resources project. Therefore, further consideration of this law is not required.

The National Historic Preservation Act of 1966. (16 U.S.C. 470 et seq.) Section 106 of the Act and implementing regulations (36 CFR Part 800) require the Regional Administrator, before issuing a license to adopt measures when feasible to mitigate potential adverse effects of the licensed activity and properties listed or eligible for listing in the National Register of Historic Places. The Act's requirements are to be implemented in cooperation with State Historic Preservation Officers and upon notice to, and when appropriate, in consultation with the Advisory Council on Historic Preservation. Since the activities covered in this permit application do not call for further construction, land development, or infringement on historical places, no impact from the operation of the industrial boiler or associated storage tanks will be incurred. Therefore, further consideration of this law is not required.

The Endangered Species Act. (16 U.S.C. 1531 et seq.) Section 7 of the Act and implementing regulations (50 CFR Part 402) require the Regional Administrator to ensure, in consultation with the Secretary of the Interior or Commerce, that any action authorized by EPA is not likely to jeopardize the continued existence of any endangered or threatened species or adversely affect its critical habitat. **Attachment K-1** provides correspondence from the Massachusetts Division of Fisheries & Wildlife, Natural Heritage & Endangered Species Program (NHESP) indicating that **"At this time the site is not mapped as Priority or Estimated Habitat and the NHESP does not have any rare species concerns associated with this site"**. In addition, the activities covered in this permit application do not call for further construction or land development which may impact endangered species. Therefore, further consideration of this law is not required.

The Coastal Zone Management Act. (16 U.S.C. 1451 et seq.) Section 307(c) of the Act and implementing regulations (15 CFR Part 930) prohibit EPA from issuing a permit for an activity affecting land or water use in the coastal zone until the applicant certifies that the proposed activity complies with the State Coastal Zone Management program, and the State or its designated agency concurs with the certification (or the Secretary of Commerce overrides the State's nonconcurrence). This permit application does not call for further construction or land development affecting land or water use in the coastal zone. Therefore, further consideration of this law is not required.

The Fish and Wildlife Coordination Act. (16 U.S.C. 661 et seq) The Act requires that the Regional Administrator, before issuing a permit proposing or authorizing the impoundment, diversion, or other control or modification of any body of water, consult with the appropriate State agency exercising jurisdiction over wildlife resources to conserve those resources. The activities covered in this permit application do not call for construction of a water resources project, nor for the impoundment, diversion, or other control or modification of any body of water. Therefore, further consideration of this law is not required.

ATTACHMENT K-1

CORRESPONDENCE FROM THE MASSACHUSETTS DIVISION OF FISHERIES AND WILDLIFE

Commonwealth of Massachusetts

Division of Fisheries & Wildlife

MassWildlife

Wayne F. MacCallum, *Director*

October 20, 2006

Andrea Desilets
ENSR
2 Technology Park Drive
Westford, MA 01886

RECEIVED
OCT 23 2006
By

Re: 211 Boston Street
Middleton, MA
NHESP Tracking Number: 06-20570

Dear Ms. Desilets,

Thank you for contacting the Natural Heritage and Endangered Species Program ("NHESP") of the MA Division of Fisheries & Wildlife for information regarding state-protected rare species in the vicinity of the site identified above.

At this time the site is not mapped as Priority or Estimated Habitat and the NHESP does not have any rare species concerns associated with this site.

This evaluation is based on the most recent information available in the NHESP database, which is constantly being expanded and updated through ongoing research and inventory. Should your site plans change, or new rare species information become available, this evaluation may be reconsidered. Please note that this determination addresses only the matter of **rare** wildlife habitat and does not pertain to other wildlife habitat issues that may be pertinent to the proposed project.

If you have any questions regarding this review please call Rebecca Skowron, Endangered Species Review Assistant, at ext. 148.

Sincerely,

Thomas W. French

Thomas W. French, Ph.D.
Assistant Director

MESA Information Request Form

Please complete this form to request site-specific information from the Natural Heritage & Endangered Species Program
(Please submit only one project per request form).

Please include a check for $50.00 made out to the Natural Heritage & Endangered Species Fund.*

Requestor Information

Name: Andrea Desilets

Affiliation: ENSR

Address: 2 Technology Park Drive

City: Westford State: MA Zip Code: 01886

Daytime Phone: 978-589-3000 Ext. 3579

Project Information

Project or Site Name: Bostik

Location: 211 Boston Street USGS Quad: Reading

Name of Landowner or Project Proponent: Bostik, Inc.

Acreage of the Property: 63 acres

Description of Proposed Project and Current Site Conditions: (If necessary attach additional sheet)

No new work proposed at site. The facility's RCRA Part B application is being updated. There will be no new construction or buildings.

☐ Will this project be reviewed as a Notice of Intent by the local Conservation Commission?
☒ Will this project be undergoing MEPA review for reasons other than rare species?
☒ Have you enclosed the required copy of a USGS topographic map in the scale 1:24,000 or 1:25,000 (not copy reduced) with the site location clearly marked and centered on the copy page? (Copies of Natural Heritage Atlas pages are not accepted)

Please **mail** this completed form and topographic map to:

Regulatory Review
Natural Heritage and Endangered Species Program
MA Division of Fisheries and Wildlife
North Drive, Rte. 135
Westborough, MA 01581

Questions regarding this form should be directed to (508) 792-7270 ext. 154

Persons requesting information will receive a written response within 30 days of receipt of all information required. Please do not ask for an expedited review. *If you are requesting information for habitat management or conservation purposes and you are a non-profit conservation group, government agency or working with a government agency please fill out a Data Release Form.

July 2005

Section L - Part B Certification

[40 CFR 270.11]

"I certify under penalty of law that this document and all attachments were prepared under my direction or supervision according to a system designed to assure that qualified personnel properly gather and evaluate the information submitted. Based on my inquiry of the person or persons who manage the system, or those persons directly responsible for gathering the information, the information submitted is, to the best of my knowledge and belief, true, accurate, and complete. I am aware that there are significant penalties for submitting false information, including the possibility of fine and imprisonment for knowing violations."

Daniel F. Welch

Health Safety Environment & Quality Manager

High Performance Polymer Division

Bostik, Inc. – Middleton, MA

Section M - Subpart AA Process Vents

[40 CFR 270.14(a); 264.1030; and 264.1031]

The Bostik facility does not have any process vents associated with distillation, fractionation, thin-film evaporation, solvent evaporation, or air or steam stripping operations that manage hazardous waste subject to 40 CFR 270 permitting requirements. Therefore, the requirements of 40 CFR 264 Subpart AA do not apply to the Bostik facility.

Section N - Subpart BB Equipment Leaks

N.1 Applicability and Definitions [40 CFR 270.14(a); 270.25; 264.1031; 264.1050; and 264.1051]

N.1.1 Applicability

This subpart applies to equipment (other than tanks and containers) that contains or contacts hazardous waste streams with organic concentrations of at least 10 percent by weight. The equipment that is subject to the requirements of this subpart will be clearly marked and readily distinguishable from other equipment. A Master Tag list of all equipment subject to Subpart BB is contained in **Attachment N-1**.

N.1.2 Definition of Equipment

- Valve
- Pump
- Compressor
- Pressure Relief Device
- **Closed-vent system** means a system that is not open to the atmosphere and that is composed of piping connections, and, if necessary, flow inducing devices that transport gas or vapor from a piece or pieces of equipment to a control device.
- **Connector** means flanged, screwed, welded, or other jointed pipe fittings used to connect two pipelines or a pipeline and a piece of equipment. For the purposes or reporting and recordkeeping, connector means flanged fittings that are not covered by insulation or other materials that prevent location of the fittings.
- **A leak** is indicated by an instrument reading of greater than or equal to 10,000 ppm organics using Reference Method 21 (40 CFR Part 60).
- **No detectable emissions** is defined by an instrument reading of < 500 ppm organics above background level using Reference Method 21 (40 CFR Part 60).
- **In light liquid service** means that the piece of equipment contains or contacts a waste stream where the vapor pressure of one or more of the organic components in the stream is greater than 0.3 kilopascals (kPa) at 20°C, the total concentration of the pure organic components having a vapor pressure greater 0.3 kPa at 20°C is equal to or greater than 20 percent by weight, and the fluid is a liquid at operating temperatures.

- **In Heavy liquid service** means that the piece of equipment is not in gas/vapor service or in light liquid service.
- **In Situ Sampling Systems** means non-extractive samplers or in-line samplers.
- **Open-ended Valve or line** means any valve, except pressure relief valves, having one side of the valve seat in contact with hazardous waste and open side open to the atmosphere, either directly or through open piping.
- **Sampling connection system** means an assembly of equipment within a process or waste management unit used during periods of representative operation to take samples of the process or waste fluid. Equipment used to take non-routine grab samples is not considered a sampling connection system.

N.1.3 Equipment in Vacuum Service or Less Than 300 Hours Service

Equipment in vacuum service or equipment that contains or contacts hazardous waste with an organic concentration of at least 10 percent by weight for a period of less than 300 hours per calendar year is excluded from this subpart. The Leak Detection Monitoring Log presented in Attachment N-1 identifies the components that are in service less than 300 hours.

N.2 Monitoring [40 CFR 270.25(d); 264.1052; 264.1059; and 264.1063]

N.2.1 Monthly Monitoring of Leaks

Bostik will monitor each pump in light liquid service monthly to detect leaks by Reference Method 21 (40 CFR Part 60), except as described in N.2.5. Results of the monthly monitoring will be recorded on the Leak Detection Monitoring Log.

N.2.2 Visual Inspection of Pump Seal

Bostik will visually inspect each pump in light liquid service each calendar week for indications of liquid dripping from the pump seal. Weekly visual inspections will be documented on the BIF Daily Inspection Form included previously in Section F (Table F-1).

N.2.3 Leak Detection

Bostik will ensure that monthly monitoring is performed while the pumps are operating. Any instrument reading of 10,000 ppm or greater will be considered a leak. In addition, any dripping discovered during a visual inspection will be considered a “leak”.

N.2.4 Leak Repair as Soon as Practicable

When a leak is detected, Bostik will repair the leak as soon as practicable, but no later than 15 calendar days after is detected, except as provided in Section N.9 (Delay of Repairs). A first attempt at repair will be made no later than 5 calendar days after it is detected, except as provided in Section N.9. When a leak is detected, the date and time of the repair attempts will be recorded on the Leak Repair Form, included in Attachment N-1.

N.2.5 Specific Exemptions

Bostik does not currently operate any dual mechanism seal pumps. This exception is therefore not applicable. Each pump equipped with a dual mechanical seal system that includes a barrier fluid system is exempt from these requirements provided that:

- each dual mechanical seal is operated with the barrier fluid at a pressure that is at all times greater than the pump stuffing box pressure, or,
- is equipped with a barrier fluid degassing reservoir that is connected by a closed vent system to a control device, or,
- is equipped with a system that purges the barrier fluid into a hazardous waste stream with no detectable emissions to the atmosphere.

The barrier fluid must not be a hazardous waste with organic concentrations 10 percent or greater by weight. Each barrier fluid system must be equipped with a sensor that will detect failure of the seal system, the barrier system, or both. Each pump must be checked by visual inspection, each calendar week, for indications of liquids dripping from the pump seals. Each sensor must be checked daily or be equipped with an audible alarm that must be checked monthly to ensure that it is functioning properly.

Bostik currently has no pumps designated for no detectable emissions. Any pump that is designated for no detectable emissions is exempt from monthly monitoring and weekly visual inspections provided it meets the following:

- has no externally actuated shaft penetrating the pump housing,
- operates with no detectable emissions, and
- is monitored for no detectable emissions initially upon designation and annually.

N.3 Barriers [40 CFR 270.14(a); 270.25(d); 264.1053; and 264.1059]

Since Bostik does not operate compressors associated with this hazardous waste stream or process, this section is not applicable.

N.4 Pressure Relief Devices [40 CFR 270.25(d) and 264.1054]

Bostik does not currently operate any pressure relief devices except on storage tanks covered under Subpart CC. Except during pressure releases, each pressure relief device in gas/vapor service shall be operated with no detectable emissions, as indicated by an instrument reading of less than 500 ppm above background, as measured by Reference Method 21 (40 CFR Part 60).

After each pressure release, the pressure relief device shall be returned to a condition of no detectable emissions, as indicated by an instrument reading of less than 500 ppm above background,

as soon as practicable, but no later than 5 calendar days after each pressure release, except as provided in Section N.9.

Within 5 calendar days of the pressure release, the pressure relief device will be monitored to confirm the condition of no detectable emissions, as indicated by an instrument reading of less than 500 ppm above background, as measured by Reference Method 21 (40 CFR Part 60).

Any pressure relief device that is equipped with a closed vent system capable of capturing and transporting leakage from the pressure device to a control device is exempt from these requirements.

N.5 Sampling [40 CFR 270.25(d); 264.1055; and 264.1060]

N.5.1 Sampling Connecting Systems

Each sampling connection system shall be equipped with a closed-purge, closed loop, or closed-vent system. This system shall collect the sample purge for return to the process or for routing to the appropriate treatment system. Bostik will collect the purged process fluid via a closed purge and recycle it back to the process to be burned. Gases displaced during filling of the sample container are not required to be collected or captured.

N.5.2 Sampling System Exemptions

Bostik does not currently operate any In situ sampling systems and sampling systems without purges. This exemption is therefore not applicable.

N.6 Valves [40 CFR 270.25(d) and 264.1056]

N.6.1 Open-Ended Valves or Lines

Bostik will ensure that each open ended valve or line is equipped with a cap, blind flange, plug, or a second valve. The cap, blind flange, plug, or second valve will seal the open end at all times except during operations requiring waste stream flow through the open-ended valve or line. Open-ended valves or lines are not required to be monitored.

Bostik does not currently operate any double block and bleed systems associated with the hazardous waste process. When a double block and bleed system is being used, the bleed valve or line may remain open during operations that require venting the line between the block valves but shall comply with the first paragraph of this section at all other times.

N.6.2 Second Valve

Bostik does not currently operate any open ended lines equipped with a second valve. Each open ended valve or line equipped with a second valve shall be operated in a manner such that the valve on the hazardous waste stream end is closed before the second valve is closed.

N.7 Monitoring Schedules [40 CFR 270.25(d); 264.1057; 264.1058; and 264.1061-1063]

Valves must be monitored monthly to detect "leaks". If an instrument reading of 10,000 ppm or greater is measured, a leak is detected, using Reference Method 21 (40 CFR Part 60). If a leak is detected, the valve shall be monitored monthly until a leak is not detected for two successive months. Results of this monitoring will be recorded on the Leak Detection Monitoring Log.

If a leak is not detected in two consecutive months, the valve may be monitored the first month of each succeeding quarter, beginning with the next quarter, until a leak is detected.

Any valve that is designated for “no detectable emissions”, as indicated by an instrument reading of less than 500 ppm above background, is exempt from the monthly/quarterly monitoring provided the valve:

- Has no external actuating mechanism in contact with the waste stream
- Is operated with emissions less than 500 ppm above background, and
- Is monitored for no detectable emissions initially upon designation and annually, and
- At other times requested by the Regional Administrator.

Exemptions are also made for valves that are "unsafe to monitor" or "difficult to monitor". Bostik currently operates 3 valves that could be considered “difficult to monitor”. At a minimum, difficult to monitor valves will be monitored annually.

N.8 Leak Detection [40 CFR 270.25(d); 264.1058; 264.1059; and 264.1063]

N.8.1 Monitoring

Bostik does not operate pumps and valves in heavy liquid service or pressure relief devices in light or heavy liquid service.

Bostik will conduct leak detection monitoring procedures on flanges and other connectors in compliance with Reference Method 21 (40 CFR Part 60). Flanges and other connectors are required to be monitored for "leaks" within 5 days if evidence of a potential leak is found by visual, audible, olfactory, or any other detection method. Results of this monitoring will be recorded on the Leak Detection Monitoring Log.

Bostik will use a detection instrument to conduct leak detection procedures that meets the performance criteria of Reference Method 21 (40 CFR Part 60). This detection instrument will be calibrated before each use by the procedures specified in Reference Method 21 (40 CFR Part 60).

N.8.2 Leak Detection

General monitoring procedures are listed below.

- Place the probe inlet at the surface of the component interface.
- Move the probe along the interface periphery while observing the instrument readout.
- If an increased meter reading is indicated, sample that part of the interface until the maximum meter reading is obtained and leave the probe inlet in that position for approximately two times the response time.
- If the maximum reading is greater than or equal to 10,000 ppm, a "leak" in the component has been identified. A maximum reading of less than 10,000 ppm indicates a component does not "leak".

N.8.3 Leak Repair as Soon as Practicable

When a leak is detected from a piece of equipment covered under this subpart, Bostik will conduct repairs as soon as practicable, but not later than 15 calendar days after it was detected, unless an exception is allowed as discussed in Section N.9. The component will have a visible, weatherproof identifier that indicates the equipment ID number, the date evidence of a potential leak was found, and the date the leak was detected by monitoring. The identification will be removed, with the exception of valves, when the repair is completed. The identification on valves may only be removed after two consecutive months of monitoring with no “leaks”.

Bostik will ensure that a first attempt at repairing the leak is made within 5 days of detection by completing a Leak Repair Form and submitting it immediately to the Maintenance Department.

The leak repair form contains the following information:

- Inspector’s identification;
- Component type, ID #, and location;
- The date evidence of a potential leak (visual, olfactory, etc.) was found;
- The date the leak was detected ;
- The dates of each attempt to repair the leak and the repair methods applied in each attempt to repair the leak;
- Monitoring results after the repair attempt. The letter “P” for pass will be indicated for an instrument reading less than 10,000 ppm and the letter “F” for fail will be indicated for an instrument reading greater than or equal to 10,000 ppm.

- Whether or not the repair was completed within 15 calendar days and the reason for any delay, if required;
- Documentation supporting the delay of repair of a valve (see Section N.9);
- The signature of the owner/operator whose decision it was that repair could not be effected without a hazardous waste management unit shutdown;
- The expected date of repair of the leak if not repaired within fifteen days; and the successful repair date.

A sample form is included in Attachment N-1.

N.8.4 Inaccessible or Ceramic Lined Connections

Since Bostik has no inaccessible or ceramic lined connectors, this exemption is not applicable.

N.9 Delay of Repairs [40 CFR 270.25(d) and 264.1059]

Repair delays on equipment for which leaks have been detected are allowed if the criteria presented in the following are met:

- If the repair is technically infeasible without a hazardous waste unit shutdown. In such a case, repair of this equipment shall occur before the end of the next shutdown.
- If the equipment is isolated from and does not continue to contain or contact hazardous waste with organic concentrations ≥10 percent by weight. The repair must be completed prior to returning the equipment to the service of hazardous waste with organic concentrations ≥10 percent by weight.
- Valve repairs may be delayed if the emissions of purged material resulting from immediate repair of the valve would be greater than the emissions resulting from the delay. Also, the purged material must be collected and destroyed, or recovered by a control device, when the repair is effected.
- Pump repairs may be delayed if the repair requires the use of a dual mechanical seal system that includes a barrier fluid system and if the repair is completed as soon as practicable, but no later than six months after the leak is detected.

Delay of repair beyond a hazardous waste management unit shutdown will be allowed for a valve if:

- valve assembly replacement is necessary, and
- valve assembly supplies have been depleted, and
- valve assembly supplies had been sufficiently stocked before the supplies were depleted.

Delay beyond the next shutdown is not allowed unless shutdown occurs sooner than 6 months after the first shutdown.

N.10 Closed Vent Systems [40 CFR 270.25(e); 264.1033; and 264.1060]

The section is not applicable to Bostik since leaks from pumps under Subpart BB are not collected and vented to the control device. The control device is in place to control emissions from tanks under Subpart CC.

N.11 Alternative Monitoring Programs [40 CFR 270.25(e) and 264.1061]

This section is not applicable since Bostik does not wish to implement the alternative standards allowing 2% of valves to leak.

N.12 Alternative Work Practices [40 CFR 270.25(e) and 264.1062]

This section is not applicable since Bostik does not wish to reduce the monthly monitoring requirement under this alternative standard.

N.13 Recordkeeping Requirements [40 CFR 270.25(a)-(c); 264.1064; and 264.1065]

Records required by this air quality program will be maintained on the forms described in the following subsections and kept in the facility operating record. Examples of these forms are presented in Attachment N-1. The required monitoring records for each piece of equipment are maintained in an excel spreadsheet. Each monitoring location has a unique identification tag. There are currently over 200 tags identifying covered components. An example of the excel spreadsheet is provided in Attachment N-1.

N.13.1 Semiannual Report

A semiannual report will only be required if "leaks" are not repaired within the time frame specified in Section N.2, or if a control device exceeds or operates outside of the design specifications for more than 24 hours. The semiannual report will provide the following information:

- The facility EPA ID number, name, and address;
- For each month during the semiannual reporting period, the equipment identification number of each valve, pump, or compressor which was not repaired in the required time frame;
- Dates of hazardous waste management unit shutdowns during the semiannual period; and
- Dates when the control device exceeded or operated outside of the design specifications, as indicated by control device monitoring, and was not corrected within 24 hours. The duration, cause, and corrective measures for each exceedance shall also be reported.

If no exceedances occur during a semi-annual period, no report will be filed.

N.13.2 Implementation Schedule

This section is not applicable.

N.13.3 Performance Test Plan

This section is not applicable.

Table N-1 Monitoring Schedule

Equipment Type	Monitoring Frequency	Monitoring Category
Pumps in light liquid service not designated for "no detectable emissions"	Monthly monitoring, and Weekly visual	"Leak" Detection
Pumps in light liquid service designated for "no detectable emissions"	Annual monitoring	"No Detectable Emissions"
Pressure relief devices in gas/vapor service	Monitored after each pressure release event	"No Detectable Emissions"
Valves in gas/vapor or light liquid service not designated for "no detectable emissions"	Monthly monitoring, or Quarterly monitoring (if no "leak" detected for 2 consecutive months)	"Leak" Detection
Valves in gas/vapor or light liquid service designated for "no detectable emissions"	Annual monitoring	"No Detectable Emissions"
Pumps and valves in heavy liquid service; Pressure relief devices in light liquid service; and Flanges and other connectors	Monitored (within 5 days) after discovering a potential leak with sensory evidence	"Leak" Detection
Closed Vent Systems	Annually	"No Detectable Emissions"

ATTACHMENT N-1

EXAMPLE RECORDKEEPING FORMS AND LEAK DETECTION MONITORING LOG

SAMPLE – FOR ILLUSTRATION PURPOSES ONLY

"LEAK" REPAIR FORM

Inspector's Name_____ Inspector's Signature_____

Component Type_____

Component Identification Number_____

Component Location_____

Date Potential "Leak" Found (visible, olfactory, etc.)_____

Date "Leak" was Detected_____

Note: All leaks must be repaired within 15 days and the first attempt at repair must take place within 5 days.

Date of Each Repair Attempt	**Method of Repair Attempt (include work order number)**	**Monitor Results after Repair Attempt (Pass or Fail)**

Was the "Leak" Repaired in < 15 Days? Yes No

Successful Repair Date_____

Reason For Delay of Repair_____

_____

_____

Expected Date of Repair_____

Owner/Operator Signature_____

SAMPLE – FOR ILLUSTRATION PURPOSES ONLY

Designation of "No Detectable Emissions" Form
Initial, Annual, & Return to Service Monitoring

Date of Test_____

Component Location_____

Component Identification Number_____

Component Type_____

Background Level _____

Maximum Instrument Reading _____

Arithmetic Difference _____ Pass Fail

Date of Test_____

Component Location_____

Component Identification Number_____

Component Type_____

Background Level _____

Maximum Instrument Reading _____

Arithmetic Difference _____ Pass Fail

The above components, in meeting all applicable requirements of 40 CFR 264.1057(f-h), are designated for "no detectable emissions".

Owner/Operator

Name and Signature: _____

Date: _____

BIF Subpart BB

Leak Detection Monitoring Log

Inspector's Name: _____

Tag #	Location	Equipment Description	Size	Visible Leaker?	Instrument Reading	Leak >= 10,000 PPM Detected?	Date Tested	Method of Compliance	Difficult to Monitor?	In service < than 300hrs?
BB-001	Struthers Wells Boiler	Tee	1/2"					Method 21		
BB-002	Struthers Wells Boiler	Elbow	1/2"					Method 21		
BB-003	Struthers Wells Boiler	Pressure Gage (30 psi)	3/8"					Method 21		
BB-004	Struthers Wells Boiler	Static Mixing Tube	1/2"					Method 21		
BB-005	Struthers Wells Boiler	Tee	3/4"					Method 21		
BB-006	Struthers Wells Boiler	Ball Valve	1/2"					Method 21		
BB-007	Struthers Wells Boiler	Elbow	3/4"					Method 21		
BB-008	Struthers Wells Boiler	Union	3/4"					Method 21		
BB-009	Struthers Wells Boiler	Check Valve	3/4"					Method 21		
BB-010	Struthers Wells Boiler	Ball Valve	3/4"					Method 21		
BB-011	Struthers Wells Boiler	Tee	3/4"					Method 21		
BB-012	Struthers Wells Boiler	Ball Valve	3/4"					Method 21		
BB-013	Struthers Wells Boiler	Elbow	3/4"					Method 21		
BB-014	Struthers Wells Boiler	Elbow	3/4"					Method 21		
BB-015	Struthers Wells Boiler	Elbow	3/4"					Method 21		
BB-016	Struthers Wells Boiler	Flange on Flow Meter	1 1/4"					Method 21		
BB-017	Struthers Wells Boiler	Flange on Flow Meter	1 1/4"					Method 21		
BB-018	Struthers Wells Boiler	Elbow	3/4"					Method 21		
BB-019	Struthers Wells Boiler	Union	3/4"					Method 21		
BB-020	Struthers Wells Boiler	Ball Valve	3/4"					Method 21		
BB-021	Struthers Wells Boiler	Reducer	2" to 3/4"					Method 21		
BB-022	Struthers Wells Boiler	Ball Valve	3/4"					Method 21		
BB-023	Struthers Wells Boiler	Tee	3/4"					Method 21		
BB-024	Struthers Wells Boiler	Ball Valve	3/4"					Method 21		
BB-025	Struthers Wells Boiler	Elbow	3/4"					Method 21		
BB-026	Struthers Wells Boiler	Ball Valve	3/8"					Method 21		
BB-027	Struthers Wells Boiler	Elbow	3/8"					Method 21		
BB-028	Struthers Wells Boiler	Pressure Gage (60 psi)	3/8"					Method 21		
BB-029	Struthers Wells Boiler	Reducer	3/4" to 1/2"					Method 21		
BB-030	Struthers Wells Boiler	Motorized Flow Adjustment Valve	1/2"					Method 21		
BB-031	Struthers Wells Boiler	Tee	1/2"					Method 21		
BB-032	Struthers Wells Boiler	Ball Valve	3/8"					Method 21		
BB-033	Struthers Wells Boiler	Elbow	3/8"					Method 21		
BB-034	Struthers Wells Boiler	Pressure Gage (100 psi)	3/8"					Method 21		
BB-035	Struthers Wells Boiler	Tee	1/2"					Method 21		
BB-036	Struthers Wells Boiler	End Cap	1/2"					Method 21		
BB-037	Struthers Wells Boiler	Check Valve	1/2"					Method 21		
BB-038	Struthers Wells Boiler	Union	1/2"					Method 21		
BB-039	Struthers Wells Boiler	Tee	1/2"					Method 21		
BB-040	Struthers Wells Boiler	Ball Valve	1/2"					Method 21		
BB-041	Struthers Wells Boiler	Quick Disconnect Air Chuck	3/8"					Method 21		
BB-042	Struthers Wells Boiler	Tee	1/2"					Method 21		

Tag #	Location	Equipment Description	Size	Visible Leaker?	Instrument Reading	Leak >= 10,000 PPM Detected?	Date Tested	Method of Compliance	Difficult to Monitor?	In service < than 300hrs?
BB-043	Struthers Wells Boiler	Elbow	3/8"					Method 21		
BB-044	Struthers Wells Boiler	Pressure Gage	3/8"					Method 21		
BB-045	Struthers Wells Boiler	Ball Valve	1/2"					Method 21		
BB-046	Struthers Wells Boiler	Motorized Valve	1/2"					Method 21		
BB-047	Struthers Wells Boiler	Tee	1/2"					Method 21		
BB-048	Struthers Wells Boiler	Tee	3/8"					Method 21		
BB-049	Struthers Wells Boiler	Pressure Switch	3/8"					Method 21		
BB-050	Struthers Wells Boiler	Elbow	1/2"					Method 21		
BB-051	Struthers Wells Boiler	Elbow	3/8"					Method 21		
BB-052	Struthers Wells Boiler	Globe Vavlve	3/8"					Method 21		
BB-053	Struthers Wells Boiler	Pressure Gage	3/8"					Method 21		
BB-054	Struthers Wells Boiler	Elbow	1/2"					Method 21		
BB-055	Struthers Wells Boiler	Union	1/2"					Method 21		
BB-056	Struthers Wells Boiler	Ball Valve	1/2"					Method 21		
BB-057	Struthers Wells Boiler	Elbow	1/2"					Method 21		
BB-058	Struthers Wells Boiler	Tee	1/2"					Method 21		
BB-059	Struthers Wells Boiler	Elbow	1/2"					Method 21		
BB-060	Struthers Wells Boiler	Ball Valve	1/2"					Method 21		
BB-061	Struthers Wells Boiler	Cam Lock End Cape	1"					Method 21		
BB-062	Struthers Wells Boiler	Elbow	1/2"					Method 21		
BB-063	Struthers Wells Boiler	Reducer	1" to 3/4"					Method 21		
BB-064	Struthers Wells Boiler	Union	1"					Method 21		
BB-065	Struthers Wells Boiler	Tee	1"					Method 21		
BB-066	Struthers Wells Boiler	Temperture Probe	3/4"					Method 21		
BB-067	Struthers Wells Boiler	Tee	1"					Method 21		
BB-068	Struthers Wells Boiler	Pressure Gage	3/8"					Method 21		
BB-069	Struthers Wells Boiler	Globe Valve (Sealed Stem)	1"					Method 21		
BB-070	Struthers Wells Boiler	Globe Valve (Sealed Stem)	1"					Method 21		
BB-071	Struthers Wells Boiler	Globe Valve (Sealed Stem)	1"					Method 21		
BB-072	Building 27	Globe Valve (Sealed Stem)	1"					Method 21		
BB-073	Building 27	Sight Glass (Burner Feed Line)	1"					Method 21		
BB-074	Building 27	Globe Valve (Sealed Stem)	1"					Method 21		
BB-075	Building 27	Sight Glass (Burner Recirc. Line)	1"					Method 21		
BB-076	Building 27	Globe Valve (Sealed Stem)	1/2"					Method 21		
BB-077	Building 27	End Cap	1/2"					Method 21		
BB-078	Building 27	Flange	1"					Method 21		
BB-079	Building 27	Ball Valve	1"					Method 21		
BB-080	Building 27	Elbow	1"					Method 21		
BB-081	Building 27	Union	1"					Method 21		
BB-082	Building 27	Elbow (45 degree)	1"					Method 21		
BB-083	Building 27	Elbow	1"					Method 21		
BB-084	Building 27	Ball Valve	1"					Method 21		
BB-085	Building 27	Tee	1"					Method 21		
BB-086	Building 27	Globe Valve (T-1)	1"					Method 21		
BB-087	Building 27	Dampener (T-1)	1"					Method 21		
BB-088	Building 27	Union (T-1)	1"					Method 21		
BB-089	Building 27	Diaghpram Pump (T-1)	1"					Method 21		
BB-090	Building 27	Flange (T-1)	1 1/2"					Method 21		
BB-091	Building 27	Filter Basket (T-1)	1 1/2"					Method 21		

Tag #	Location	Equipment Description	Size	Visible Leaker?	Instrument Reading	Leak >= 10,000 PPM Detected?	Date Tested	Method of Compliance	Difficult to Monitor?	In service < than 300hrs?
BB-092	Building 27	Flange (T-1)	1 1/2"					Method 21		
BB-093	Building 27	Globe Valve (T-1)	1 1/2"					Method 21		
BB-094	Building 27	Air Valve (T-1)	1 1/2"					Method 21		
BB-095	Building 27	Ball Valve (T-1)	3/4"					Method 21		
BB-096	Building 27	Elbow	1/2"	Fitting Removed				Method 21		
BB-097	Building 27	Globe Valve	1"					Method 21		
BB-098	Building 27	Globe Valve	1"					Method 21		
BB-099	Building 27	Globe Valve	1"					Method 21		
BB-100	Building 27	End Cape	1"					Method 21		
BB-101	Building 27	Globe Valve	1"					Method 21		
BB-102	Building 27	End Cape	1"					Method 21		
BB-103	Building 27	Globe Valve	1"					Method 21		
BB-104	Building 27	Globe Valve	1"					Method 21		
BB-105	Building 27	Dampener (T-2)	1"					Method 21		
BB-106	Building 27	Globe Valve	1"					Method 21		
BB-107	Building 27	Union (T-2)	1"					Method 21		
BB-108	Building 27	Diaghpram Pump (T-2)	1"					Method 21		
BB-109	Building 27	Flange (T-1)	1"					Method 21		
BB-110	Building 27	Filter Basket (T-2)	1 1/2					Method 21		
BB-111	Building 27	Flange (T-2)	1 1/2					Method 21		
BB-112	Building 27	Globe Valve (T-2)	1 1/2"					Method 21		
BB-113	Building 27	Air Valve (T-2)	1 1/2"					Method 21		
BB-114	Building 27	Ball Valve	3/4"					Method 21		
BB-115	Building 27	Elbow	1/2"	Fitting removed				Method 21		
BB-116	Building 27	Globe Valve T2 Blowback	1"					Method 21		
BB-117	Building 27	Globe Valve T1 Blowback	1"					Method 21		
BB-118	Building 27	Check Valve Feed line	1"					Method 21		
BB-119	Building 27	Globe Valve	1"					Method 21		
BB-120	Building 27	Globe Valve	1"					Method 21		
BB-121	Building 27	Flange	1"					Method 21		
BB-122	Building 27	Globe Valve	1"					Method 21		
BB-123	Building 27	Globe Valve	1"					Method 21		
BB-124	Building 27	Globe Valve	1"					Method 21		
BB-125	Building 27	Flange	1"					Method 21		
BB-126	Building 27	Globe Valve	1"					Method 21		
BB-127	Building 27	Check Valve Recerculation	1"					Method 21		
BB-128	Building 27	Site Glass	1"					Method 21		
BB-129	Building 27	Globe Valve T2	1"					Method 21		
BB-130	Building 27	Globe Valve T1	1"					Method 21		
BB-131	Building 27	Globe Valve Offload	1"					Method 21		
BB-132	Building 27	Globe Valve T1	1"					Method 21		
BB-133	Building 27	Globe Valve T2	1"					Method 21		
BB-134	Building 27	Ball Valve T1	1/4"					Method 21		
BB-135	Building 27	Ball Valve T2	1/4"					Method 21		
BB-136	Building 27	Check Valve	1"					Method 21		
BB-137	Building 27	Union	1"					Method 21		
BB-138	Building 27	Diaphram Pump	1"					Method 21		
BB-139	Building 27	Flange	1"					Method 21		
BB-140	Building 27	Globe Valve	1 1/2"					Method 21		

Tag #	Location	Equipment Description	Size	Visible Leaker?	Instrument Reading	Leak >= 10,000 PPM Detected?	Date Tested	Method of Compliance	Difficult to Monitor?	In service < than 300hrs?
BB-141	Building 27	Union	2"					Method 21		
BB-142	Building 27	Tee	2" to 1"					Method 21		
BB-143	Building 27	Ball Valve	3/4"					Method 21		
BB-144	Building 27	Elbow	3/4"					Method 21		
BB-145	Building 27	Elbow	3/4"					Method 21		
BB-146	Building 27	Elbow	3/4"					Method 21		
BB-147	Building 27	Filter Basket	3/4"					Method 21		
BB-148	Tote Offloading	Flange	2"					Method 21		
BB-149	Tote Offloading	Elbow	2"					Method 21		
BB-150	Tote Offloading	Camlock Valve	2"					Method 21		
BB-151	T1	Globe Valve (T-1)	1"					Method 21		
BB-152	T2	Globe Valve (T-2)	1"					Method 21		
BB-153	T1	Fire Valve T1	2"					Method 21		
BB-154	T1	Globe Valve (T-1)	2"					Method 21		
BB-155	T2	Fire Valve T2	2"					Method 21		
BB-156	T2	Globe Valve (T-2)	2"					Method 21		
BB-157	T1	Globe Valve (T-1)	1/2"					Method 21		
BB-158	T1	End Cape	1/2"					Method 21		
BB-159	T1	Temp Gage	3/4"					Method 21		
BB-160	T1	Globe Valve (T-1)	2"					Method 21		
BB-161	T1	End Cape	2"					Method 21		
BB-162	T2	Globe Valve (T-2)	1/2"					Method 21		
BB-163	T2	End Cape	1/2"					Method 21		
BB-164	T2	Temp Gage	3/4"					Method 21		
BB-165	T2	Globe Valve (T-2)	2"					Method 21		
BB-166	T2	End Cape	2"					Method 21		
BB-167	T1,T2 Dike Area West	Globe Valve Offload	1"					Method 21		
BB-168	T1	Flange Transfer Line	2"					Method 21		
BB-169	T2	Flange Transfer Line	2"					Method 21		
BB-170	Day Tank	Globe Valve	2"					Method 21		
BB-171	Day Tank	End Cape	2"					Method 21		
BB-172	Day Tank	Globe Valve	2"					Method 21		
BB-173	Day Tank	Fire Valve	2"					Method 21		
BB-174	Day Tank	Air Valve	2"					Method 21		
BB-175	Day Tank	Filter Basket	2"					Method 21		
BB-176	Day Tank	Diaphram Pump	1"					Method 21		
BB-177	Day Tank	Ckeck Valve	1"					Method 21		
BB-178	Day Tank	Filter Basket	1"					Method 21		
BB-179	Day Tank	Globe Valve	1"					Method 21		
BB-180	Day Tank	Globe Valve	1"					Method 21		
BB-181	Day Tank	Site Glass	1"					Method 21		
BB-182	Day Tank	Globe Valve	1"					Method 21		
BB-183	Blg. 36 R10	Air Valve Transfer Line T1	2"					Method 21		
BB-184	Blg. 36 R10	Air Valve Transfer Line T2	2"					Method 21		
BB-185	Blg. 36 R10	Flow Meter Transfer Line	2"					Method 21		
BB-186	Blg.35 Ceiling west	Ball Valve Transfer line	2"					Method 21		
BB-187	Blg. 40 Ceiling West	Ball Valve Transfer line	2"					Method 21		
BB-188	Blg. 40 Ceiling east	Ball Valve Transfer line	2"					Method 21		
BB-189	Blg. 9 2nd floor west	Ball Valve Transfer line	2"					Method 21		

Tag #	Location	Equipment Description	Size	Visible Leaker?	Instrument Reading	Leak >= 10,000 PPM Detected?	Date Tested	Method of Compliance	Difficult to Monitor?	In service < than 300hrs?
BB-190	Blg. 9 1st floor south	Ball Valve Transfer line	2"					Method 21		
BB-191	Blg. 9 Dike	Ball Valve Transfer line	2"					Method 21		
BB-192	Blg. 9 Dike	Flange	2"					Method 21		
BB-193	Blg. 9 Dike	Flange	1"					Method 21		
BB-194	Blg. 9 Dike	Flange	2"					Method 21		
BB-195	Blg. 9 Dike	Globe Valve	2"					Method 21		
BB-196	Blg. 9 Dike	Diaphram Pump	1"					Method 21		
BB-197	Blg. 9 Dike	Filter	1"					Method 21		
BB-198	Blg. 9 Dike	Air Valve	1"					Method 21		
BB-199	Blg. 9 Dike	Globe Valve	1"					Method 21		
BB-200	Blg. 9 Dike	Flange	1"					Method 21		
BB-201	Blg. 9 Dike	Ball Valve	2"					Method 21		
BB-202	Blg. 9 Dike	Ball Valve	2"					Method 21		

* Elbow was removed and could not be tested.

** Difficult to monitor valves need to be tested once a year and they were not tested this month.

Section O - Subpart CC Air Emission Standards

O.1 Applicability and Definitions [40 CFR 270.14(a); 270.27; and 264.1080(a)-(d)]

The requirements of this subpart apply to owners and operators of facilities that treat, store or dispose of hazardous waste in tanks, surface impoundments or containers subject to either Subpart I, J, or K of 40 CFR 264.1 with the exceptions listed below and in section O.2.

The requirements of this subpart do not apply to the following:

- A waste management unit that holds waste placed in the unit before December 6, 1996, and in which no hazardous waste is added on or after December 6, 1996.
- Containers with a design capacity less than or equal to 0.1 cubic meters, (about 26 gallons)
- A tank in which an owner or operator has stopped adding hazardous waste and the owner or operator has begun implementing or completed closure pursuant to an approved closure plan.
- A surface impoundment in which an owner or operator has stopped adding hazardous waste (except to implement an approved closure plan) and the owner or operator has begun implementing or completed closure pursuant to an approved closure plan.
- A waste management unit that is used solely for on-site treatment or storage of hazardous waste that is placed in the unit as a result of implementing remedial activities required under the corrective action authorities of RCRA, CERCLA authorities, or similar Federal or State authorities.
- A waste management unit that is used solely for the management of radioactive mixed waste in accordance with all applicable regulations under the authority of the Atomic Energy Act and the Nuclear Waste Policy Act.
- A hazardous waste management unit that the owner or operator certifies is equipped with and operating air emission controls in accordance with the requirements of an applicable Clean Air Act regulation codified under part 60, 61, or 63.
- Tanks with process vents as defined in 40 CFR 264.1031 (Subpart AA).

Since Bostik does not fall under any of the exceptions listed above, this subsection is applicable.

Some terms used to describe compliance with this subpart can be defined as follows:

- **Cover** means a device or system that is placed on or over a hazardous waste such that the entire waste surface area is enclosed and sealed to reduce air emissions to the atmosphere.

Examples of covers include a fixed roof installed on a tank, a lid installed on a drum and an enclosure in which an open container is placed during waste treatment.

- **Fixed Roof** means a rigid cover that is installed in a stationary position so that it does not move with the fluctuations in the level of the hazardous waste placed in a tank.

- **In Light Material Service** means managing a material for which both of the following conditions apply: The vapor pressure of one or more of the organic constituents in the material is greater than 0.3 kilopascals (2.25 mm Hg) at 20°C (68°F); and the total concentration of the pure organic constituents having a vapor pressure greater than 0.3 kPa at 20°C is equal to or greater than 20 percent by weight.

O.2 List of Exempt Units [40 CFR 270.14(a); 270.27; and 264.1082(c)]

A tank, surface impoundment, or container is exempt from standards specified in 264.1084 through 264.1087 of this subpart, as applicable, provided the waste management unit is one of the following:

O.2.1 Hazardous Waste with Volatile Organic Concentration of Less Than 500 ppmw

Bostik does not currently operate tanks, surface impoundments, or containers for which all hazardous waste entering the unit has an average volatile organic concentration at the point of waste origination of less than 500 ppm by weight. This exemption is therefore not applicable.

O.2.2 Reduced by Organic Destruction or Removal Process

Bostik does not currently reduce the organic content of the hazardous waste entering the waste management unit by an organic destruction or Removal process. This exemption is therefore not applicable.

O.2.3 Tanks used for Biological Treatment

Bostik does not currently utilize tanks for biological treatment of hazardous waste. This exemption is therefore not applicable.

O.2.4 Hazardous Waste meets Applicable Organic Concentration Limits

Bostik does not currently utilize tanks for which hazardous waste placed in the unit meets the numerical concentration limits for organic hazardous constituents as specified in 40 CFR 268.40 or treat the organic constituents by the treatment technology established by EPA for the waste in 40 CFR 268.42(a). This exemption is therefore not applicable.

O.2.5 Tank within Enclosure Vented to Control Device

Bostik does not currently operate any tanks that are located within an enclosure vented to a control device. This exemption is therefore not applicable.

O.3 Waste Determination Procedures [40 CFR 270.14(a); 270.27; 264.1083 and 264.1084]

Since Bostik does not claim any of the exemptions listed in the previous section, waste determination procedures are not applicable.

O.4 Tank Controls [40 CFR 270.14(a); 270.27; and 264.1084(b)(1),(2)]

Bostik has three hazardous waste storage tanks; T-1 and T-2 each have an 8,800 gallon capacity and T-9 has a 10,000 gallon capacity. Since each of Bostik's three hazardous waste storage tanks each have a capacity of less than 75 m^3 (20,000 gallons), the maximum organic vapor pressure limit for the tank is 76.6 kilopascal (kPa), and, since waste stabilization does not occur in the tanks, Tank Level 1 Controls are applicable.

O.5 Tank Conditions [40 CFR 270.14(a); 270.27; and 264.1084(b)(1)]

O.5.1 Conditions for Hazardous Waste

Bostik will ensure that the hazardous waste in the tanks shall meet the following requirements:

O.5.1.1 Maximum Organic Vapor Pressure

Bostik will ensure that the hazardous waste in the tank has a maximum organic vapor pressure that is less than the maximum organic vapor pressure limit for the tanks design capacity. Since each of Bostik's three hazardous waste storage tanks have a capacity less than 75 m^3 (~20,000 gallons), the maximum organic vapor pressure limit for the tank is 76.6 kPa. Bostik's polyester distillate waste stream has a vapor pressure of roughly 7.8 kPa, well below each tanks design capacity. In addition, Bostik's waste stream varies very little since wastes are generated from only the polyester polymerization process. Wastes are not accepted from other areas of the plant or from outside the company.

O.5.1.2 Tanks Not Heated

Bostik will not heat hazardous waste in the tank to a temperature that is greater than the temperature at which the maximum organic vapor pressure of the hazardous waste is determined. Bostik does not heat the hazardous waste tanks. All hazardous waste storage tanks are steel tanks that are located outside and are not equipped with any steam or electrical heating systems.

O.5.1.3 No Stabilization in tanks

Bostik does not treat the hazardous waste in tanks using a stabilization process so this section is not applicable.

O.5.2 Maximum Organic Vapor Pressure Determination

Bostik will determine the maximum organic vapor pressure for the polyester distillate waste stream initially and whenever changes to the waste stream managed in the tank could potentially cause the maximum organic vapor pressure to increase to a level that is equal to or greater than the maximum

organic vapor pressure limit for the tank design capacity. Since Bostik's waste has a very low vapor pressure and varies little over time, it is unlikely additional testing will be warranted.

O.5.2.1 Tank Level 1 – Fixed Roof and Closure Devices

Bostik tanks are all equipped with a fixed roof that is integral to the tanks structural design and forms a continuous barrier over the entire surface area of the hazardous waste tank. There are no visible cracks, holes, gaps, or other open spaces between the interface of the roof edge and the tank wall.

T-1, T-2, and T-9 have man ways equipped with a closure device designed to operate such that when the closure device is secured in the closed position there are no visible cracks, holes, gaps, or other spaces between the perimeter of the opening and the closure of the device.

T-1, T-2, and T-9 are vented by a closed vent system to a control device that destroys organics in the waste stream. The primary source of vapor destruction will be the Struthers Wells Industrial Boiler while the Enclosed Flare will remain in service as a backup in case the industrial boiler is not operational for any reason.

O.5.2.2 Tank Level 2 – Fixed Roof with Internal Floating Roof or External Floating Roof

Not applicable.

O.5.2.3 Tank Level 2 -Tank Vented through Closed Vent System

Not applicable.

O.5.3 Tank Level 2 - Pressure Tank

Not applicable.

O.5.4 Tank Level 2 - Tank Located inside an Enclosure

Not applicable.

O.5.5 Tank Level 1

As an owner operator of Level 1 Tanks, Bostik will:

O.5.5.1 Determine Maximum Organic Vapor Pressure

Bostik will determine the maximum organic vapor pressure for the Polyester Distillate waste stream initially and whenever changes to the waste stream managed in the tank could potentially cause the maximum organic vapor pressure to increase to a level that is equal to or greater than the maximum organic vapor pressure limit for the tank design capacity. Since Bostik's waste has a very low vapor pressure and varies little over time, it is unlikely additional testing will be warranted.

O.5.5.2 Fixed Roof Installed and each Closure Device Secured

Except as provided below, Bostik's tanks are all equipped with a fixed roof that is integral to the tanks structural design and forms a continuous barrier over the entire surface area of the hazardous waste tank. There are no visible cracks, holes, gaps, or other open spaces between the interface of the roof edge and the tank wall.

Opening of closure devices is allowed at the following times:

- To provide access to the tank for performing routine inspection, maintenance, or other activities needed for normal operations. Examples of such activities include those items when a worker needs to open a hatch to maintain or repair equipment. Following completion of the activity, the tank will be promptly secured.

- To remove accumulated sludge or other residues from the bottom of the tank.

Opening of spring loaded pressure relief valves, conservation vents, or similar type of pressure relief device during normal operations for the purpose of maintaining the tank internal pressure in accordance with tank design specifications. These devices will are designed to operate with no detectable organic emissions when the device is secured in the closed position. The settings at which these devices open will be established to ensure that the device remains in the closed position whenever the tank internal pressure is within the internal pressure operating range determined by the manufacturer recommendations or other requirements for the safe handling of ignitable materials.

Opening of a safety device is allowed at any time conditions require doing so to avoid an unsafe condition.

O.5.5.3 Inspection of Air Emission Control Equipment

Bostik will visually inspect the fixed roof and its closure devices to check for defects that could result in air pollutant emissions. Defects include, but are not limited to, visible cracks, holes, or gaps in the roof sections or between the roof and the tank wall; broken, cracked, or otherwise damaged seals or gaskets on closure devices; and broken or missing hatches, access covers, caps, or other closure devices. Bostik will conduct these visual inspections us part of the daily BIF inspection using the BIF Daily Inspection Form previously included in Section F.

In the event that a defect is detected, Bostik will make first efforts at repair of the defect no later than 5 calendar days after detection, and the repair will be completed as soon as possible but no later than 45 calendar days after detection with the following exception.

Repair of a defect may be delayed beyond 45 calendar days if Bostik determines that repair of the defect requires empting or temporary removal form service of the tank and no alternative tank capacity is available at the site to accept the hazardous waste normally managed in the tank. In this case, Bostik will repair the defect the next time the process or unit that is generating the hazardous waste managed in the tank stops operation. At that time, repair of the defect will be completed before the process resumes operation.

Bostik will maintain record of these inspections in accordance with section O.14.

O.5.6 Tank Level 2

O.5.6.1 Fixed Roof Tank with Internal Floating Roof

Not applicable.

O.5.6.2 Tank with External Floating Roof

Not applicable.

O.5.6.3 Tank vented through Closed Vent System to Control Device

Not applicable.

O.5.6.4 Pressure Tank

Not applicable.

O.5.6.5 Tank Located inside an Enclosure

Not applicable.

O.5.6.6 Continuous Hard Piping

Not applicable.

O.6 Tank Covers [40 CFR 270.14(a); 270.27; and 264.1085(b),(d)]

Since Bostik does not operate surface impoundments, this section is not applicable.

O.7 Tank Venting [40 CFR 270.14(a); 270.27; and 264.1085(c)(1)]

Since Bostik does not operate surface impoundments, this section is not applicable.

O.8 Level 1 Standards [40 CFR 270.14(a); 270.27; and 264.1086(b)(1)]

Since Bostik does not utilize containers in this hazardous waste process, this section is not applicable.

O.9 Containers [40 CFR 270.27(a)(2)]

Since Bostik does not utilize containers in this hazardous waste process, this section is not applicable.

O.10 Container Covers and Closure Devices [40 CFR 270.14(a); 270.27; and 264.1086(c)(3),(4)]

Since Bostik does not utilize containers in this hazardous waste process, this section is not applicable.

O.11 Closed Vent Systems [40 CFR 270.14(a); 270.27; and 264.1087(a)]

O.11.1 Standards that Apply

O.11.2 Closed Vent System Requirements

Bostik will ensure that closed vent systems meet the following requirements:

O.11.2.1 Routing of Gases, Vapors and Fumes to Control Device

Bostik will route the vapors emitted from the hazardous waste in the tanks to a control device that meets the requirements of section O.12. The primary route for vapors emitted from the hazardous waste tanks will be to the Struthers Wells Industrial Boiler. The secondary route for vapors emitted from the hazardous waste tanks will be to the Enclosed Flare. The secondary route will only be used when the primary route is shut down for maintenance.

O.11.2.2 Design and Operation

The closed vent system will be designed and operated in accordance with 40 CFR 264.1033(k) of this subpart which stipulates:

A closed vent system shall be designed to operate with no detectable emissions, as indicated by an instrument reading of less than 500 ppmv above background as determined by Reference Method 21, and by visual inspections; or

A closed vent system shall be designed to operate below atmospheric pressure. The system shall be equipped with at least one pressure gauge or other pressure measurement device that can be read from a readily accessible location to verify that negative pressure is being maintained in the closed vent system when the control device is operating.

O.11.2.3 Bypass Devices

In the case where the closed vent system includes bypass devices that could be used to divert the vapor stream to the atmosphere before entering the control device, each bypass device shall be equipped with either a flow indicator or a seal or locking device. Low legs drains, high point bleeds, analyzer vents, open ended valves or lines, spring loaded pressure relief valves, and other fittings used for safety purposes are not considered to be bypass devices.

If a flow indicator is used, the indicator must be installed at the inlet to the bypass line used to divert vapors from the closed vent system to the atmosphere at a point upstream of the control device inlet.

If a seal or locking device is used, the device must be placed on the mechanism by which the bypass device position is controlled (i.e., valve handle, damper lever) when the bypass device is in the closed position such that the bypass device cannot be opened without breaking the seal or removing the lock. These seals or locks mechanism must be inspected every month to verify that the bypass mechanism is maintained in the closed position.

O.12 Control Devices [40 CFR 270.27(a)(5) and 264.1087(c)(1)]

O.12.1 Control Devices Required

The control device must meet one of the following requirements identified in O.12.1.1 or O.12.1.2.

O.12.1.1 Control Device Designed to Reduce Total Organic Content by at least 95 Percent

A control device must be designed and operated to reduce the total organic content of the inlet vapor stream vented to the control device by at least 95 percent by weight. Bostik conducted a compliance test on the enclosed flare in September 1998 and demonstrated that the destruction and removal efficiency (DRE) of this unit for non-methane hydrocarbons was 99.43%. Additionally, the BIF unit will be required to meet a DRE of at least 99.99% for a principal organic constituent in the waste. Thus, either of the control devices to be used for process vapors will easily meet the 95% requirement.

O.12.1.2 Enclosed Combustion Device

The control device must be an enclosed combustion device designed and operated in accordance with 40 CFR 264.1033(c) which stipulates that:

- An enclosed combustion device shall be designed and operated to reduce organic emissions vented to it by 95 weight percent or greater; to achieve a total organic compound concentration of 20 ppmv, expressed as the sum of the actual compounds, not carbon equivalents, on a dry basis corrected to 3 percent oxygen; or
- To provide minimum residence time of 0.50 seconds at a minimum temperature of 760°C.
- If a boiler or process heater is used as the control device, then the vent stream shall be introduced into the flame zone of the boiler or process heater.

Both the polyester burner and the enclosed flare comply with these requirements.

O.12.1.3 Flare

The flare must be designed and operated in accordance with 40 CFR 264.1033(d) which stipulates:

- A flare shall be designed and operated with no visible emissions as determined by Reference Method 22 (40 CFR Part 60) except for periods not to exceed a total of 5 minutes during any 2 consecutive hours.
- A flare shall be operated with a flame present at all times, as determined by the following methods:
  - Installation, calibration, and maintenance of a flow indicator that records vent stream flow from each process vent to the control device at least every hour.
  - A heat sensing monitoring device equipped with a continuous recorder that indicates ignition of the pilot flame.

- ❖ Inspect the readings from each monitoring device at least once each operating day to check control device operation and, if necessary, immediately implement the corrective measures necessary to ensure the control device operates in compliance with the requirements of this section. Bostik will conduct these daily inspections using the BIF Daily Inspection Form previously included in Section F of this permit application.

- A flare shall be used only if the net heating value of the gas being combusted is 7.45 MJ/scm (200 Btu/scf) or greater if the flare is non-assisted.

- A steam-assisted or non-assisted flare shall be designed for and operated with an exit velocity less than 18.3 m/s (60 fps).

Bostik's Enclosed Flare complies with these requirements.

O.12.2 Closed Vent System and Control Device Operating Requirements

Bostik will ensure that the following requirements for operators of closed vent systems and control devices are complied with:

- Periods of planned routine maintenance of the control device, during which the control device does not meet the specifications of this sections, will not exceed 240 hours per year.

- The specification and requirements of this section for control devices do not apply during periods of routine maintenance.

- The specification and requirements of this section for control devices do not apply during a control device system malfunction.

- The owner/operator will demonstrate compliance with the planned routine maintenance requirements by recording the information specified in Section O.14.

O.12.3 Carbon Adsorption Systems

Since Bostik does not operate carbon adsorption systems, this section is not applicable.

O.12.4 Control Device Operation and Maintenance of Other Control Devices

Since Bostik does not operate a control device other than a thermal vapor incinerator, flare, boiler, process heater, condenser, or carbon adsorption system, this section is not applicable.

O.12.5 Control Device Performance Requirements

An owner/operator must demonstrate that a control device achieves the performance requirements specified in O.12.1.1 and O.12.1.2 using either a performance test or a design analysis, except for the following:

- A Flare;
- A boiler or process heater with a design heat input capacity of 44 megawatts or greater;
- A boiler or process heater into which the vent stream is introduced with the primary fuel;
- A boiler or industrial furnace burning hazardous waste for which the owner or operator has been issued a final permit under 40 CFR part 270 and has designed and operates the unit in accordance with the requirements of 40 CFR part 266 subpart H; or
- A boiler or industrial furnace burning hazardous waste for which the owner or operator has designed and operates in accordance with the interim status requirements of 40 CFR part 266 subpart H.

Since Bostik's primary control device is an industrial boiler operating under interim status and the secondary control device is a flare meeting the requirements of 40 CFR 264.1033(c), this section is not applicable.

O.12.6 Performance Test

If the Regional Administrator does not agree on a demonstration of control device performance using a design analysis then the disagreement will be resolved using results of a performance test performed by the owner/operator. The Regional Administrator may choose to have an authorized representative observe the performance test.

O.12.7 Inspection and Monitoring of Control Device

Bostik will inspect and monitor the closed vent system and control device in accordance with procedures specified in 40 CFR 264.1033(f)(2) and 40 CFR 264.1033(l). The reading from each monitoring device required by 40 CFR 264.1033(f)(2) shall be inspected at least once each operating day to check control device operation. Any necessary corrective measures shall be immediately implemented to ensure the control device is operated in compliance with the requirement of this section. Bostik will conduct these daily inspections using the BIF Daily Inspection and CEM Daily Inspection forms previously included in Section F of this permit application.

O.13 Inspections [40 CFR 270.27 and 264.1088]

Bostik will inspect and monitor air emission control equipment used to comply with this subpart in accordance with the applicable requirements specified in 40 CFR 264.1084 through 40 CFR 264.1087. These inspections can be summarized as follows:

- Daily inspections of the closed vent system and control device to check control device operation using the previously referenced inspection forms.
- Monthly inspections of seals or lock mechanisms to verify that bypass mechanisms are maintained in the closed position using the BIF Daily Inspection Form.

- Daily inspections of the tanks fixed roof and closure devices to check for defects that could result in air pollutant emissions using the BIF Daily Inspection Form.

O.14 Recordkeeping Requirements [40 CFR 270.27; and 264.1089]

O.14.1 Reporting Requirements

Bostik will maintain records required by this section for a minimum of 3 years. Bostik will maintain air emission control equipment design documentation until the air emission control equipment is replaced or otherwise no longer in service.

For each tank using air emission control in accordance with 40 CFR 264.1084 of this subpart, Bostik shall record:

- A unique tank identification number.
- A record of each inspection including: the date the inspection was conducted and, for each defect detected, the location of the defect, the date of the defect, the date of the detection, the corrective action taken to repair the defect, the reason for any delay of the repair, and the date the completion of the repair is expected.

For each tank using a fixed roof to comply with Tank Level 1 control requirement, records will be maintained for the determination of the maximum organic vapor pressure in the tank including, the date and time the samples were collected, that analysis method used, and the analysis results.

Documentation for the closed vent system and control device includes:

- A certification that is signed by an authorized Bostik representative that the control device is designed to operate at the performance level documented by a design analysis or by performance tests
- A description of the planned routine maintenance that is anticipated to be performed for the control device during the next 6 month period. This description shall include the type of maintenance necessary, planned frequency of maintenance, and lengths of maintenance periods.
- A description of the planned routine maintenance that was performed for the control device during the previous 6 month period. This description shall include the type of maintenance performed and the total number of hours during those 6 months that the control device did not meet the requirements of 40 CFR 264.1087(c)(1).
- Unexpected control device system malfunctions that would require the control device to not meet the requirements of 40 CFR 264.1087(c)(1) including the occurrence and duration of each malfunction, the duration during each malfunction when vapors are vented while the control device is not functioning properly, and actions taken to restore malfunctioning control devices.

O.14.1.1 Noncomplinace Reports for Exempted Units

Since Bostik does not manage hazardous waste in tanks exempted from using air emission controls under 40 CFR 264.1082(c), the section is not applicable.

O.14.1.2 Noncompliance Reports of Level 1 Controlled Tanks

Bostik will submit a written report to the Regional Administrator within 15 days of becoming aware of each occurrence when hazardous waste managed in the tank is in noncompliance with the conditions specified in 40 CFR 264.1084(b), Tank Level 1 Controls. Examples of such noncompliance's would include managing waste in the tanks with a maximum organic vapor pressure which is greater than the tank's design limit, waste heated above a temperature at which the maximum organic vapor pressure of the waste is determined, the waste is treated using a stabilization process, the tanks and closure devices do not form a continuous barrier. The written report will include the EPA identification number, facility name and address, a description of the noncompliance event and the cause, the dates of noncompliance, and the actions taken to correct the noncompliance and prevent recurrence of the noncompliance. The report will be signed and dated by an authorized representative of Bostik.

O.14.1.3 Semi-Annual Written Report

Bostik will submit to the Regional Administrator a semi-annual report that describes each occurrence during the previous 6 month period when the Struthers Wells Industrial Boiler operated continuously for 24 hours or longer in noncompliance with the applicable values defined in 40 CFR 264.1035(c)(4) or the Enclosed Flare operated with visible emissions for 5 minutes or longer in a 2 hour period.

The written report will include the EPA identification number, facility name and address, and an explanation why the control device could not be returned to compliance within 24 hours, and actions taken to correct noncompliance. The report will be signed and dated by an authorized representative of Bostik.

A semiannual report is not required for a 6 month period during which all control devices subject to this subpart are operated such that:

- During no period of 24 hours or longer did a control device operate continuously in noncompliance with applicable operating values; and
- No flare was operated with visible emissions for 5 minutes or longer in a 2 hour period.

O.14.2 Emission Control Plan

Bostik will use Sections N and O of this Part B Permit Application as an emission control plan for both Method 21 in 40 CFR Part 60, Appendix A and control device methods.

O.14.3 Subpart CC Implementation Plan

No applicable.

Table O-1 Tanks Subject to Subpart CC Controls

Subpart CC Information	Units	Tank T-1	Tank T-2	Tank T-9
Capacity	gallons	8,800	8,800	10,000
	m^3	33.3	33.3	37.9
Heated?	--	No	No	No
Maximum Vapor Pressure	kPa	76.6	76.6	76.6
Control Requirement	--	Level 1	Level 1	Level 1