DOCUMENTATION OF ENVIRONMENTAL INDICATOR DETERMINATION

Interim Final 2/5/99

RCRA Corrective Action
Environmental Indicator (EI) RCRIS code (CA750)

Migration of Contaminated Groundwater Under Control

Facility Name: ____**Waterbury Companies, Inc.**_____
Facility Address: _____**64 Avenue of Industry, Waterbury, CT**_____
Facility EPA ID #: _____**CTD001165695**_____

1. Has **all** available relevant/significant information on known and reasonably suspected releases to the groundwater media, subject to RCRA Corrective Action (e.g., from Solid Waste Management Units (SWMU), Regulated Units (RU), and Areas of Concern (AOC)), been **considered** in this EI determination?

__x__ If yes - check here and continue with #2 below.

_____ If no - re-evaluate existing data, or

_____ if data are not available, skip to #8 and enter"IN" (more information needed) status code.

BACKGROUND

Definition of Environmental Indicators (for the RCRA Corrective Action)
Environmental Indicators (EI) are measures being used by the RCRA Corrective Action program to go beyond programmatic activity measures (e.g., reports received and approved, etc.) to track changes in the quality of the environment. The two EI developed to-date indicate the quality of the environment in relation to current human exposures to contamination and the migration of contaminated groundwater. An EI for non-human (ecological) receptors is intended to be developed in the future.

Definition of "Migration of Contaminated Groundwater Under Control" EI
A positive "Migration of Contaminated Groundwater Under Control" EI determination ("YE" status code) indicates that the migration of "contaminated" groundwater has stabilized, and that monitoring will be conducted to confirm that contaminated groundwater remains within the original "area of contaminated groundwater" (for all groundwater "contamination" subject to RCRA corrective action at or from the identified facility (i.e., site-wide)).

Relationship of EI to Final Remedies
While Final remedies remain the long-term objective of the RCRA Corrective Action program the EI are near-term objectives which are currently being used as Program measures for the Government Performance and Results Act of 1993, GPRA). The "Migration of Contaminated Groundwater Under Control" EI pertains ONLY to the physical migration (i.e., further spread) of contaminated ground water and contaminants within groundwater (e.g., non-aqueous phase liquids or NAPLs). Achieving this EI does not substitute for achieving other stabilization or final remedy requirements and expectations associated with sources of contamination and the need to restore, wherever practicable, contaminated groundwater to be suitable for its designated current and future uses.

Duration / Applicability of EI Determinations
EI Determinations status codes should remain in RCRIS national database ONLY as long as they remain true (i.e., RCRIS status codes must be changed when the regulatory authorities become aware of contrary information).

2. Is **groundwater** known or reasonably suspected to be **"contaminated"**[1] above appropriately protective "levels" (i.e., applicable promulgated standards, as well as other appropriate standards, guidelines, guidance, or criteria) from releases subject to RCRA Corrective Action, anywhere at, or from, the facility?

__x__ If yes - continue after identifying key contaminants, citing appropriate "levels," and referencing supporting documentation.

_____ If no - skip to #8 and enter "YE" status code, after citing appropriate "levels," and referencing supporting documentation to demonstrate that groundwater is not "contaminated."

_____ If unknown - skip to #8 and enter "IN" status code.

Rationale and Reference(s):

Background

Available information indicates that groundwater (GW) located to the north of the facility building as delineated by groundwater monitoring wells (MW), GZ-5 and GZ-6, exhibits slight exceedences of 1,1,1-trichloroethane (111-TCA) and cis-1,2-dichloroethylene (cis-12-DCE). The most recent GW data (per letter from facility dated Aug. 20, 1998) revealed 111-TCA and cis-12-DCE at maximum concentrations of 420 and 30 ug/l, respectively, in GZ-5 which are above CTDEP's Remediation Standard Regulations (RSR) for GA-designated aquifers; the facility is located above an aquifer that is designated as a GA-aquifer. The data, including a recent soil gas survey (SGS) reasonably suggest that this contamination is the result of a historical surface spill event.

Recent Additional Investigation Activities

As a result of EPA recommendations, two nested pairs of groundwater (GW) monitoring wells (MW), MW-10/11 and MW-12/13, were installed downgradient from GZ-5/GZ-6 at the facility property boundary during the period of Mar 8 through 11, 1999 to determine whether this contamination is effectively confined to the site. GZ-5 and GZ-6 were resampled as part of this investigation. A site plan is provided as Figure 1 and a MW cross section diagram is provided as Figure 2.

GZ-5/GZ-6 Results

The results of this investigation as reported in a June 1, 1999 letter report indicate that low levels of 1,1,1-trichloroethane (TCA), tetrachloroethylene (PCE) and cis/trans-1,2-dichloroethylene (DCE) were detected in GZ-5 at concentrations of 250 *ug/l*, 7 *ug/l* and 36 *ug/l*, respectively. These concentrations are equal to or in exceedence of Federal Drinking Water Standards (MCL): TCA (200 *ug/l*), DCE (7 *ug/l*) and PCE (7 *ug/l*). No target constituents were detected in GZ-6. GZ-5 is screened in the underlying weathered gneiss bedrock at 25 to 33 feet below grade (ft BG).

GZ-10/11 and GZ-12/13 Results

The June 1, 1999 letter report indicate that low levels of 1,1-dichloroethylene (11-DCE), TCA, DCE and 1,1-dichloroethane (11-DCA) were detected in groundwater in all four wells. However, only MW-11 exhibited concentrations at or in excess of MCLs: 5 *ug/l* of 11-DCE (MCL: 5 *ug/l*) and 28 *ug/l* of DCE (MCL: 7 *ug/l*). MW-11 is screened in the deep overburden close to the bedrock. The soil boring results indicate that bedrock at both MW-10/11 and MW-12/13 locations is competent and unweathered. No volatile organic compounds (VOC) were detected in laboratory analyses of soil boring soil samples.

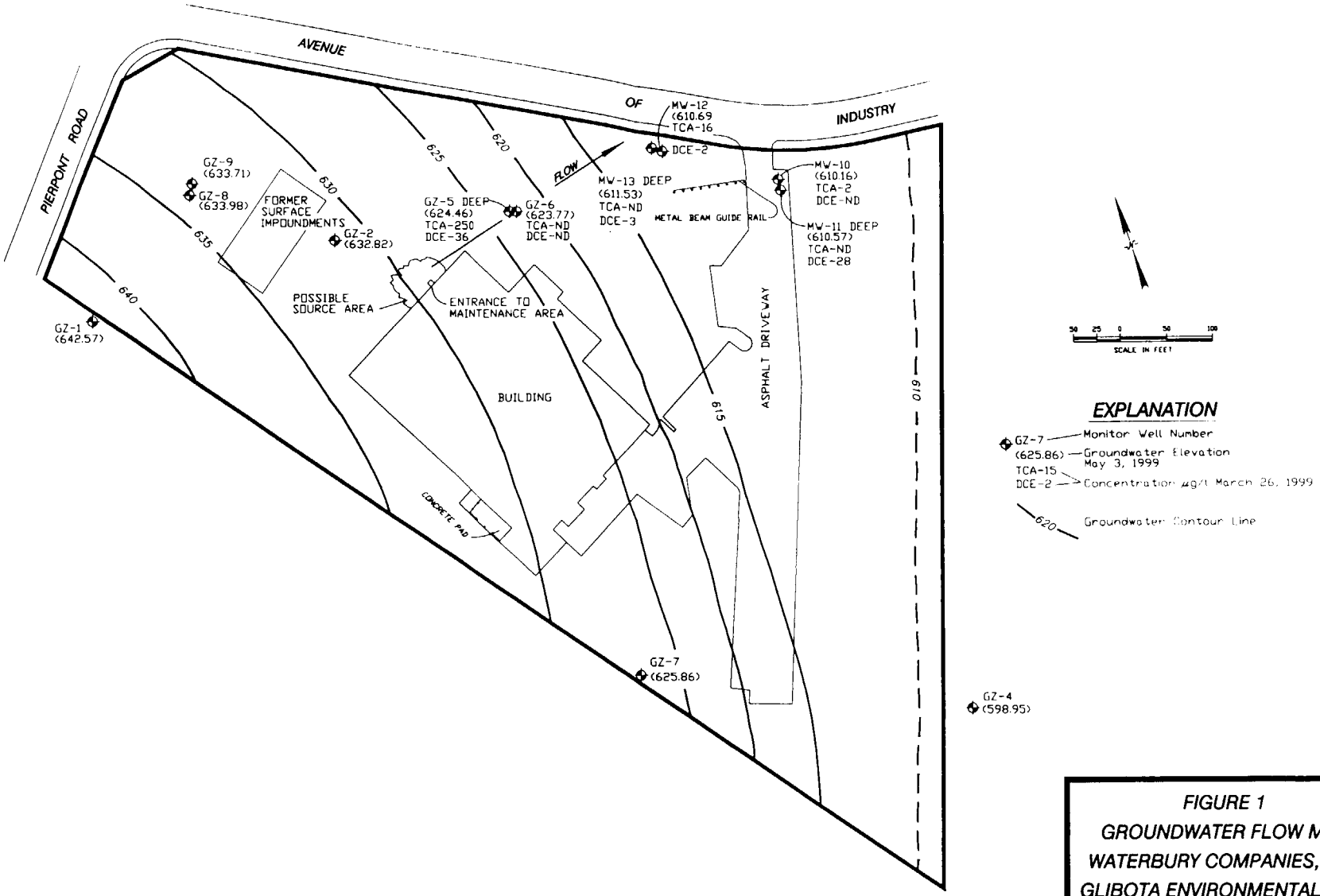

FIGURE 1
GROUNDWATER FLOW MAP
WATERBURY COMPANIES, INC.
GLIBOTA ENVIRONMENTAL, INC.

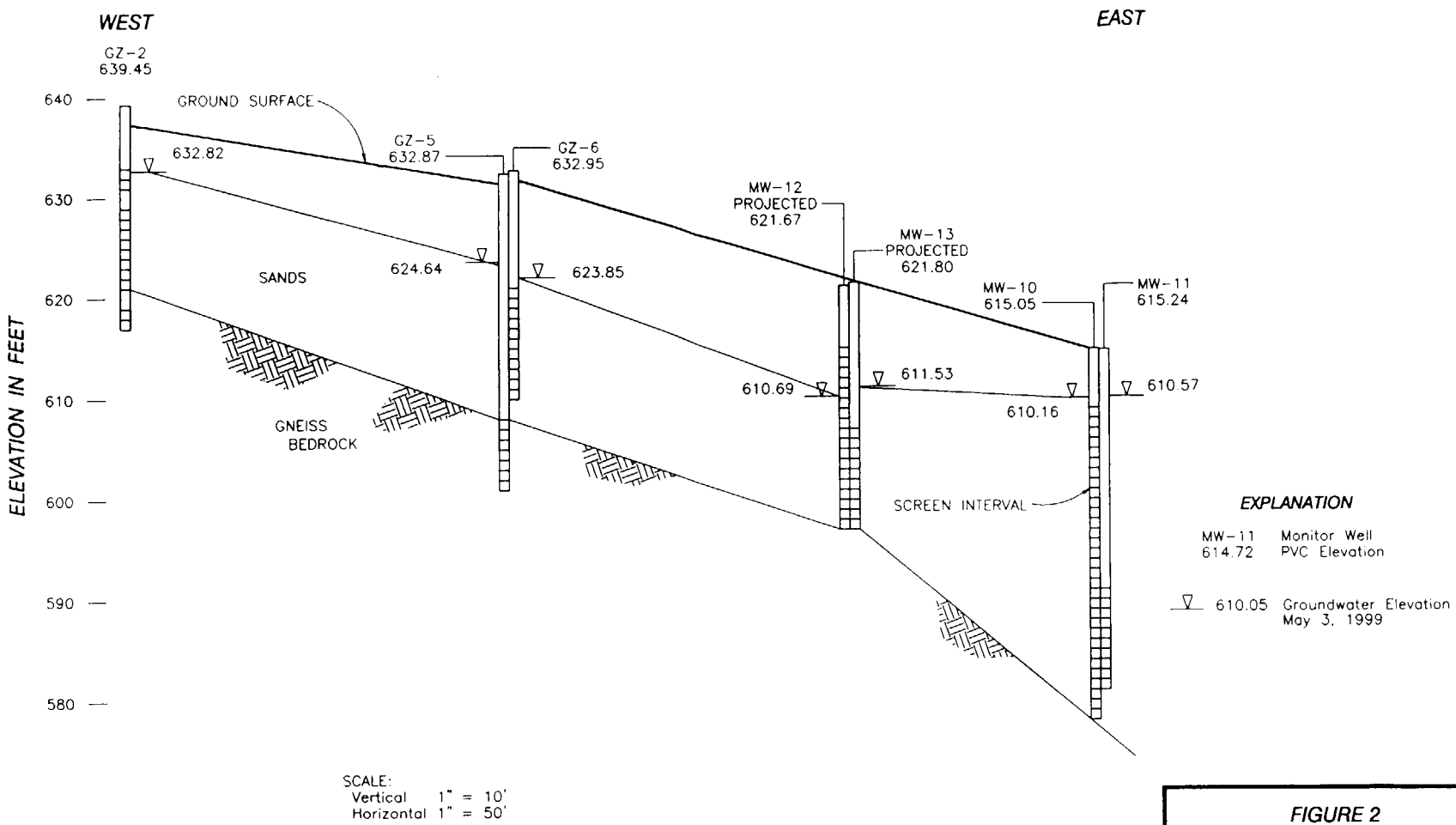

FIGURE 2
CROSS SECTION
WATERBURY COMPANIES, INC.
GLIBOTA ENVIRONMENTAL, INC.

Analysis

As EPA observed in an April 13, 1998 letter to the facility, the low levels of target constituents suggested a localized surface spill event. The data from the most recent investigation tends to support this interpretation: a line drawn from MW-10/11 and MW-12/13 at the facility boundary and back through GZ-5/GZ-6 to the facility intersects the maintenance room door/area of the facility. It is probable that the detected groundwater concentrations represent the disposal of a small quantity of degreaser solvent outside the maintenance room door. However, soil gas survey data in the maintenance room area has not revealed a vadose zone source indicating that the suspect spill event must have been a relatively small quantity and historical in the sense that a relatively recent spill event would have been detected in the soil gas analyses.

In addition, the detected suite of constituents are consistent with the compositional fingerprint of the biotic/abiotic degradation of TCA and/or PCE, the solvents more likely to have been used for maintenance room degreasing. Also, note that (1) low levels of PCE are detected at GZ-5 but not at MW-11 and (2) the number of components detected increases at MW-11 vis-a-vis GZ-5; these data/observations support an interpretation that degradation is in fact occurring as a function of time and distance - i.e., that precursors are being degraded into a panoply of degradation components. That the detected constituents are in fact degradation products of TCA and PCE is supported by the attached figure (as Figure 3) which presents degradation pathways for various solvent precursors.

Given the above as background, the following analysis considers whether groundwater can be considered as stabilized within the context of CA750.

Footnotes:

[1]"Contamination" and "contaminated" describes media containing contaminants (in any form, NAPL and/or dissolved, vapors, or solids, that are subject to RCRA) in concentrations in excess of appropriate "levels" (appropriate for the protection of the groundwater resource and its beneficial uses).

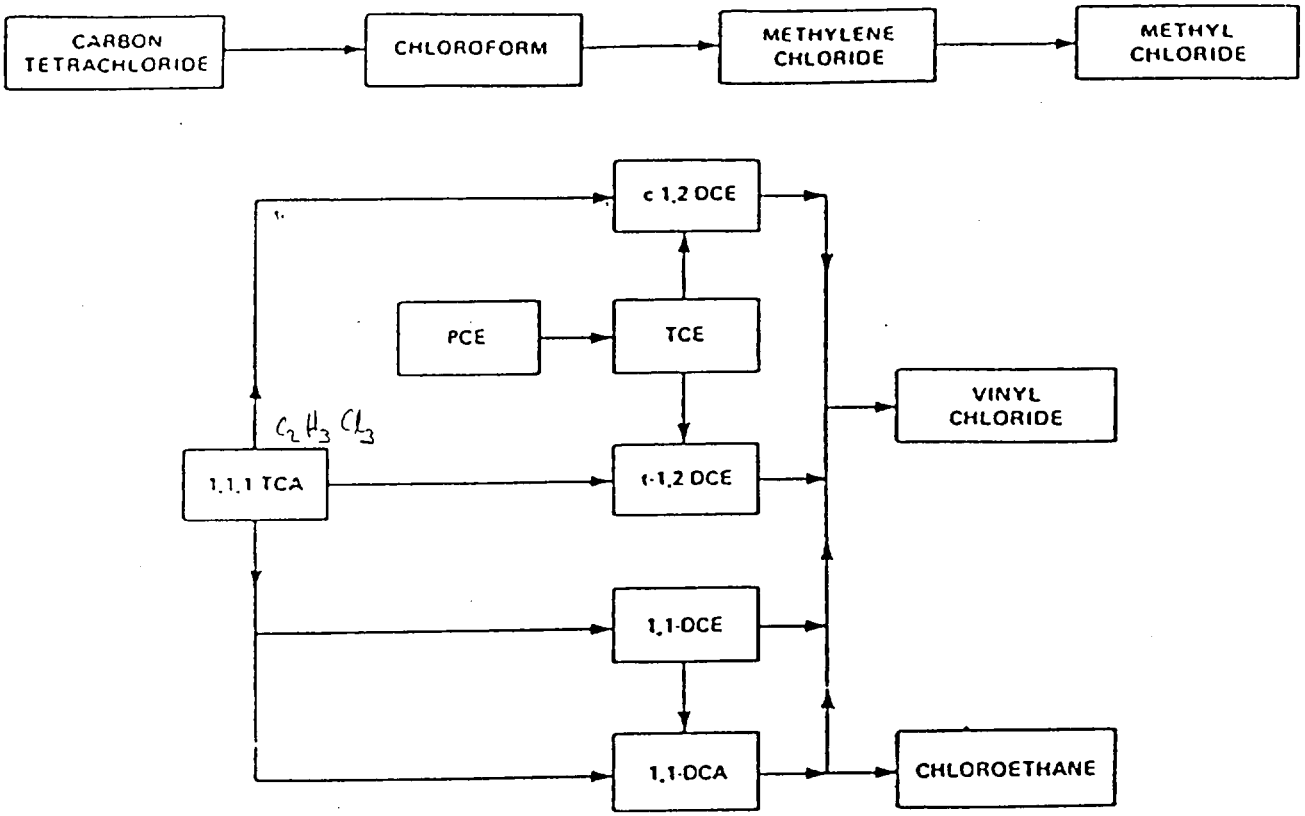

Fig. 1 Transformation pathways for various volatile organic priority pollutants in soil-groundwater systems.

Figure 3

3. Has the **migration** of contaminated groundwater **stabilized** (such that contaminated groundwater is expected to remain within "existing area of contaminated groundwater"[2] as defined by the monitoring locations designated at the time of this determination)?

__x__ If yes - continue, after presenting or referencing the physical evidence (e.g., groundwater sampling/measurement/migration barrier data) and rationale why contaminated groundwater is expected to remain within the (horizontal or vertical) dimensions of the "existing area of groundwater contamination"[2]).

_____ If no (contaminated groundwater is observed or expected to migrate beyond the designated locations defining the "existing area of groundwater contamination"[2]) - skip to #8 and enter "NO" status code, after providing an explanation.

_____ If unknown - skip to #8 and enter "IN" status code.

Rationale and Reference(s):

The data as presented in the June 1, 1999 letter report indicates that the dissolved-phase contaminants are attenuating.

Figures 4 and 5 demonstrate a decrease in concentration of dissolved-phase TCA and DCE at GZ-5 as a function of time; said decrease is supported by linear regression analysis. The inference from Figures 4 and 5 is that (1) the mass of the suspected upgradient source, if not entirely dissipated, is/has decreased and that (2) the dissolved-phase plume is attenuating by way of dilution and/or biotic/abiotic degradation.

Moreover, from the data, the attenuation of dissolved phase constituents can be linearly approximated/quantified; that is, 7 ug/l of PCE at GZ-5 is degraded to non-detectable concentrations by the time and distance in reaching MW-11 (a distance of approximately 300 ft); 36 ug/l of DCE at GZ-5 is attenuated to 3 ug/l at MW-12 (175 ft) and 28 ug/l at MW-11 (300 ft); and, 250 ug/l of TCA is attenuated to 16 ug/l at MW-12 and 2 ug/l at MW-10. Using this data, an empirical linear attenuation factor was derived to estimate attenuation as a function of distance. The data and calculated attenuation factors are presented in the attached Table 1. From this linear approximation, it may be extrapolated that the precursor and degradation constituents would attenuate to non-detectable concentrations by dilution and/or biotic/abiotic degradation within a maximum distance of 1,350 feet of GZ-5. Therefore, for purposes of this question, the "existing area of contaminated groundwater" is defined by an area some 1,200 feet beyond the facility boundary. Within this area, migration of contaminated groundwater is stabilized.

Note that this linear approximation is conservative since attenuation/degradation is not given by a linear function. Dilution itself is not a linear function; it is described by a partial-differential advection-dispersion equation. In this case, the available overburden saturated zone increases in depth by the facility boundary which would result in an increased non-linear dilution factor. In short, it is probable, given the apparent geologic uniformity of the overburden saturated zone, that attenuation of precursor and degradation product constituents to non-detectable levels would occur well within 1,200 feet of the facility boundary.

Although the data and calculations based on the data indicate that groundwater migration is stabilized within the given area, the question arises as to the land use for the area beyond the facility boundary and therefore, potential impacts to current human health (CA725). EPA had the facility conduct a receptor survey for the immediate area in accordance with a recommendation made in the draft June 1, 1999 letter report. EPA received the receptor survey entitled "*Draft Report Receptor Survey In the Vicinity of 64 Avenue*

Linear Regression for Well GZ-5

Number of Events Entered: 15
Slope -1.13 +/- 0.91
y intercept: 299.78 +/- 0.12
Correlation Coefficient: -0.33

Input Data:

Date	Months	TCA ug/l
9/87	0	154
2/88	5	543
8/89	23	380
12/89	27	180
7/90	34	270
12/90	39	170
8/91	47	400
4/92	55	200
9/92	60	290
12/93	75	3
5/94	80	ND
12/97	123	420
4/98	127	132
7/98	130	19
3/99	138	250

Figure 4

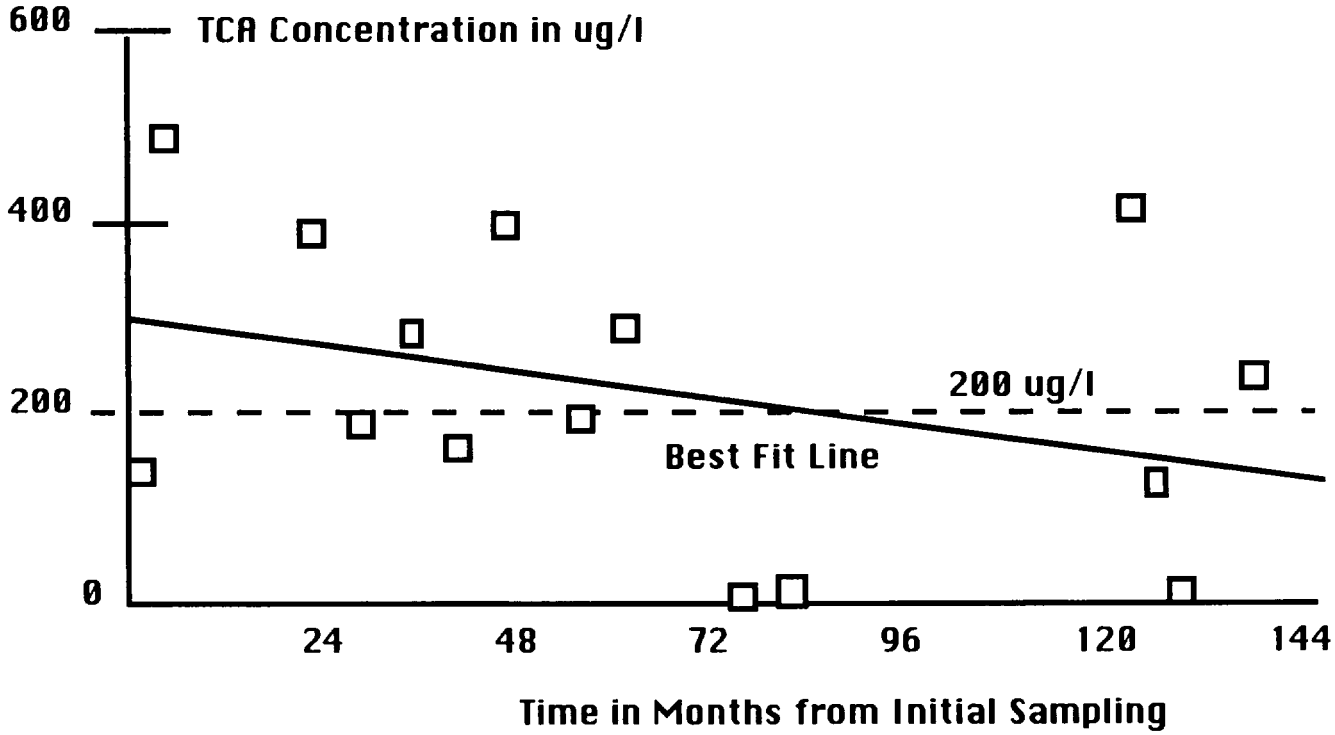

Linear Regression for Well GZ-5

Number of Events Entered: 13
Slope -0.19 +/- 0.15
y intercept: 46.48 +/- 0.13
Correlation Coefficient: -0.36

Input Data:

Date	Months	DCE ug/l
9/87	0	12
2/88	5	83
8/89	23	71
12/89	27	67
7/90	34	25
12/90	39	25
8/91	47	ND
4/92	55	23
9/92	60	50
12/97	123	30
4/98	127	28
7/98	130	4
3/99	138	36

Figure 5

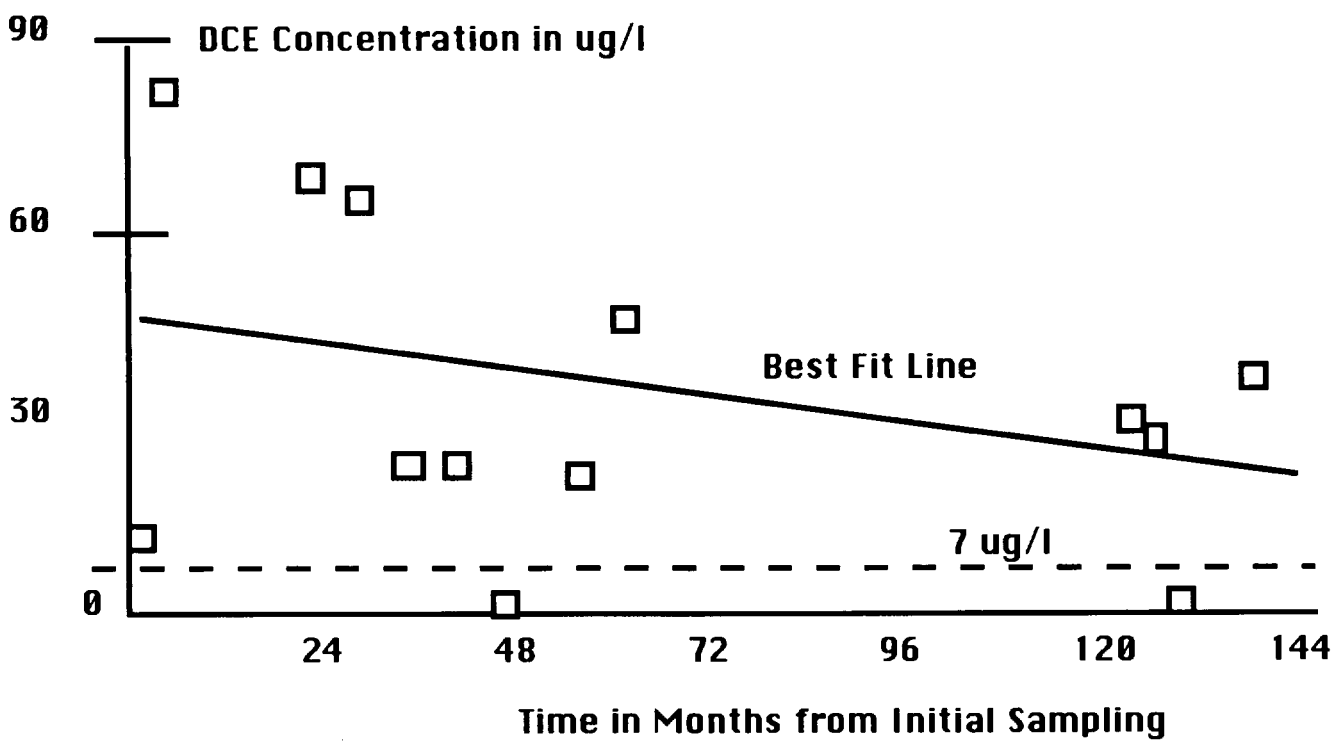

TABLE 1

Derivation of an Empirical Distance-Attenuation Factor for Extrapolating Dissolved-Phase Attenuation

Waterbury Companies, Waterbury CT
June 9, 1999

Constituent	Upgradient Location	Upgradient Conc (ug/l)	Downgradient Location	Downgradient Conc (ug/l)	Absolute Difference/ Attenuation	% Diff/Atten	Distance (ft)	%Atten./Dist	Dist/%Atten
PCE	GZ-5	7	MW-12	nd	7	100.00%	175	0.005714	175.00
	GZ-5	7	MW-11	nd	7	100.00%	300	0.003333	300.00
DCE	GZ-5	36	MW-12	3	33	91.67%	175	0.005238	190.91
	GZ-5	36	MW-11	28	8	22.22%	300	0.000741	1350.00
TCA	GZ-5	250	MW-12	16	234	93.60%	175	0.005349	186.97
	GZ-5	250	MW-10	2	242	96.80%	300	0.003227	309.92
							Avg	0.003934	418.80
							Max	0.005714	1350.00
							Min	0.000741	175.00
							Range	0.004974	1175.00

c:\data\wp\wc\factor

***of Industry, Waterbury, Connecticut*,"** **dated July 16, 1999 (draft receptor survey). The draft receptor survey indicated that "the property within a 1,500 foot distance hydrogeologically down-gradient (east-northeast) of the subject property is either undeveloped or commercial property." Draft receptor survey at p. 2. A survey of available records indicates that all properties located within 1,500 feet of the facility are connected to Municipal water supply. *Id.* at p. 4. In addition, "North Swamp Brook, an intermittent stream, is located approximately 800 feet to the east (hydrogeologically down-gradient) of the subject property." *Id.* at p. 2. There is a reasonable basis to conclude that this stream "serves as a groundwater divide for shallow groundwater." *Id.* at p. 3. Moreover, the concentrations of VOCs detected in MW's 10 and 11 do not exceed CTDEP's Remediation Standard Regulations (RSR) volatilization criteria. Therefore, it is highly unlikely that dissolved-phase VOC concentrations downgradient of MW-10 and 11 exceed the same criteria.**

In sum, migration of contaminated groundwater is reasonably inferred to be stabilized within the given area and today's CA750 result does not negatively impact current human health (CA725). It is recommended here that "YE" be entered for CA750.

[2] "existing area of contaminated groundwater" is an area (with horizontal and vertical dimensions) that has been verifiably demonstrated to contain all relevant groundwater contamination for this determination, and is defined by designated (monitoring) locations proximate to the outer perimeter of "contamination" that can and will be sampled/tested in the future to physically verify that all "contaminated" groundwater remains within this area, and that the further migration of "contaminated" groundwater is not occurring. Reasonable allowances in the proximity of the monitoring locations are permissible to incorporate formal remedy decisions (i.e., including public participation) allowing a limited area for natural attenuation.

4. Does "contaminated" groundwater **discharge** into **surface water** bodies?

_____ If yes - continue after identifying potentially affected surface water bodies.

__x__ If no - skip to #7 (and enter a "YE" status code in #8, if #7 = yes) after providing an explanation and/or referencing documentation supporting that groundwater "contamination" does not enter surface water bodies.

_____ If unknown - skip to #8 and enter "IN" status code.

Rationale and Reference(s):

not applicable

5. Is the **discharge** of "contaminated" groundwater into surface water likely to be **"insignificant"** (i.e., the maximum concentration[3] of each contaminant discharging into surface water is less than 10 times their appropriate groundwater "level," and there are no other conditions (e.g., the nature, and number, of discharging contaminants, or environmental setting), which significantly increase the potential for unacceptable impacts to surface water, sediments, or eco-systems at these concentrations)?

_____ If yes - skip to #7 (and enter "YE" status code in #8 if #7 = yes), after documenting: 1) the maximum known or reasonably suspected concentration[3] of key contaminants discharged above their groundwater "level," the value of the appropriate "level(s)," and if there is evidence that the concentrations are increasing; and 2) provide a statement of professional judgement/explanation (or reference documentation) supporting that the discharge of groundwater contaminants into the surface water is not anticipated to have unacceptable impacts to the receiving surface water, sediments, or eco-system.

_____ If no - (the discharge of "contaminated" groundwater into surface water is potentially significant) - continue after documenting: 1) the maximum known or reasonably suspected concentration[3] of each contaminant discharged above its groundwater "level," the value of the appropriate "level(s)," and if there is evidence that the concentrations are increasing; and 2) for any contaminants discharging into surface water in concentrations[3] greater than 100 times their appropriate groundwater "levels," the estimated total amount (mass in kg/yr) of each of these contaminants that are being discharged (loaded) into the surface water body (at the time of the determination), and identify if there is evidence that the amount of discharging contaminants is increasing.

_____ If unknown - enter "IN" status code in #8.

Rationale and Reference(s):_____

_____ **not applicable** _____

[3] As measured in groundwater prior to entry to the groundwater-surface water/sediment interaction (e.g., hyporheic) zone.

6. Can the **discharge** of "contaminated" groundwater into surface water be shown to be "**currently acceptable**" (i.e., not cause impacts to surface water, sediments or eco-systems that should not be allowed to continue until a final remedy decision can be made and implemented[4])?

_____ If yes - continue after either: 1) identifying the Final Remedy decision incorporating these conditions, or other site-specific criteria (developed for the protection of the site's surface water, sediments, and eco-systems), and referencing supporting documentation demonstrating that these criteria are not exceeded by the discharging groundwater; OR 2) providing or referencing an interim-assessment,[5] appropriate to the potential for impact, that shows the discharge of groundwater contaminants into the surface water is (in the opinion of a trained specialists, including ecologist) adequately protective of receiving surface water, sediments, and eco-systems, until such time when a full assessment and final remedy decision can be made. Factors which should be considered in the interim-assessment (where appropriate to help identify the impact associated with discharging groundwater) include: surface water body size, flow, use/classification/habitats and contaminant loading limits, other sources of surface water/sediment contamination, surface water and sediment sample results and comparisons to available and appropriate surface water and sediment "levels," as well as any other factors, such as effects on ecological receptors (e.g., via bio-assays/benthic surveys or site-specific ecological Risk Assessments), that the overseeing regulatory agency would deem appropriate for making the EI determination.

_____ If no - (the discharge of "contaminated" groundwater can not be shown to be "**currently acceptable**") - skip to #8 and enter "NO" status code, after documenting the currently unacceptable impacts to the surface water body, sediments, and/or eco-systems.

_____ If unknown - skip to 8 and enter "IN" status code.

Rationale and Reference(s):_____

_____ **not applicable** _____

[4] Note, because areas of inflowing groundwater can be critical habitats (e.g., nurseries or thermal refugia) for many species, appropriate specialist (e.g., ecologist) should be included in management decisions that could eliminate these areas by significantly altering or reversing groundwater flow pathways near surface water bodies.

[5] The understanding of the impacts of contaminated groundwater discharges into surface water bodies is a rapidly developing field and reviewers are encouraged to look to the latest guidance for the appropriate methods and scale of demonstration to be reasonably certain that discharges are not causing currently unacceptable impacts to the surface waters, sediments or eco-systems.

7. Will groundwater **monitoring** / measurement data (and surface water/sediment/ecological data, as necessary) be collected in the future to verify that contaminated groundwater has remained within the horizontal (or vertical, as necessary) dimensions of the "existing area of contaminated groundwater?"

_____ If yes - continue after providing or citing documentation for planned activities or future sampling/measurement events. Specifically identify the well/measurement locations which will be tested in the future to verify the expectation (identified in #3) that groundwater contamination will not be migrating horizontally (or vertically, as necessary) beyond the "existing area of groundwater contamination."

_____ If no - enter "NO" status code in #8.

_____ If unknown - enter "IN" status code in #8.

Rationale and Reference(s):_____

_____ **not applicable** _____

8. Check the appropriate RCRIS status codes for the Migration of Contaminated Groundwater Under Control EI (event code CA750), and obtain Supervisor (or appropriate Manager) signature and date on the EI determination below (attach appropriate supporting documentation as well as a map of the facility).

__x__ YE - Yes, "Migration of Contaminated Groundwater Under Control" has been verified. Based on a review of the information contained in this EI determination, it has been determined that the "Migration of Contaminated Groundwater" is "Under Control" at the at the **Waterbury Companies, Inc.** facility, EPA ID **#CTD001165695**, located at **64 Avenue of Industry, Waterbury, CT**. Specifically, this determination indicates that the migration of "contaminated" groundwater is under control, and that monitoring will be conducted to confirm that contaminated groundwater remains within the "existing area of contaminated groundwater" This determination will be re-evaluated when the Agency becomes aware of significant changes at the facility.

_____ NO - Unacceptable migration of contaminated groundwater is observed or expected.

_____ IN - More information is needed to make a determination.

Completed by (signature) _____ Date ___6/10/99___
(print) Raphael J. Cody **Revised: 7/20/99**
(title) RCRA Facility Manager

Supervisor (signature) _____ Date 8/2/99
(print) Matthew Hoagland
(title) Chief, RCRA Corrective Action
(EPA Region or State) Region 1

Locations where References may be found:

____ see facility files _____

Contact telephone and e-mail numbers

(name)_____Raphael J. Cody_____
(phone #)___617/918-1366_____
(e-mail)____Cody.Ray@EPAMail.EPA.gov_____