LIST OF TABLES

Table A-1 Data Quality Objectives
Table A-2 Decision Criteria used for Initial Disposal Classification of Sediments under RCRA and TSCA Disposal Rules
Table B-1 Example Sample ID and Horizontal Coordinates
Table B-2 River Section 1 Program Summary
Table B-3 River Section 2 Program Summary
Table B-4 River Section 3 Program Summary
Table B-5 Sample Container and Preservation Requirements
Table B-6a – B-6j Reference Limit and Evaluation Tables for Analytical Methods
Table B-7a – B-7n Measurement Performance Criteria Tables for Analytical Methods
Table B-8 Data Collected During Sediment Core Collection
Table B-9 Data Collected During Sample Processing in the Field Lab
Table B-10 Valid Values for PCBs
Table C-1 Summary of Analyses for Initial PE Acceptance Criteria Development
Table C-2 Summary of Analyses for Inter-Laboratory Comparison Study
Table D-1 Format of an Environmental Standards Quality Assurance Review

APPENDICES

Appendix 1 SOP for Sediment Core Collection
Appendix 2 SOP for Bathymetric Survey
Appendix 3 SOP for Sub-Bottom Acoustic and Electromagnetic Surveying Equipment
Appendix 4 SOP for Sediment Probing
Appendix 5 SOP for the Analysis of PCBs by SW-846 Method 8082 (GEHR8082)
Appendix 6 SOP for the Extraction and Cleanup of Sediment/Solid Samples for PCB Analysis Using the Pressurized Fluid Extraction by SW-846 Method 3545 (GEHR3545)
Appendix 7 SOP for the Extraction and Cleanup of Sediment/Soil Samples for PCB Analysis Using the Soxhlet Extraction by SW-846 Method 3540C (GEHR3540C)
Appendix 8 SOP for Analysis of PCB Homologs by EPA Method 680 (GEHR680)
Appendix 9 SOP for Data Package Deliverable (DPSOP)
Appendix 10 SOP for Grain Size
Appendix 11 SOP for Atterberg Limit
Appendix 12 SOP for Specific Gravity
Appendix 13 SOP for Bulk Density

APPENDICES (Cont.)

Appendix 14 *(This appendix is no longer necessary. It has been left for convenience for potential future use).*
Appendix 15 SOP for Total Organic Carbon
Appendix 16 SOP for USCS Classification
Appendix 17 SOP for Side Scan Survey Procedures
Appendix 18 SOP for Core Processing
Appendix 19 *(This appendix is no longer necessary. It has been left for convenience for potential future use).*
Appendix 20 SOP for ^{137}Cs
Appendix 21 SOP for TCLP Preparation by 1311
Appendix 22 SOP for VOAs With TCLP Preparation
Appendix 23 SOP for SVOAs With TCLP Preparation
Appendix 24 SOP for Pesticides With TCLP Preparation
Appendix 25 SOP for Herbicides With TCLP Preparation
Appendix 26 SOP for Preparation of Metals and Mercury and Analysis of Mercury in Leachate (Refer to Appendix 29 for the Analysis of Metals by ICP)
Appendix 27 SOP for Ignitability
Appendix 28 SOP for PCDD/PCDF
Appendix 29 SOP for Preparation and Analyses of Metals and Mercury in Sediment
Appendix 30 Performance and Reporting of Field Audits
Appendix 31 Performance and Reporting of Analytical Laboratory Audits
Appendix 32 SOP for Data Validation of VOA Data (DV8260B)
Appendix 33 SOP for Data Validation of SVOA Data (DV8270C)
Appendix 34 SOP for Data Validation of Pesticide Data (DV8081A)
Appendix 35 SOP for Data Validation of Herbicide Data (DV8151A)
Appendix 36 SOP for Data Validation of PCBs (DV8082)
Appendix 37 SOP for Data Validation of PCB (Homolog) Data (by GEHR680)
Appendix 38 SOP for Data Validation of PCDD and PCDF Data (DV1613B)
Appendix 39 SOP for Data Validation of ICP Metals Data (DV6010B)
Appendix 40 SOP for Data Validation of Mercury Data (DV74707471)
Appendix 41 SOP for Data Validation of TOC Data (DVTOC)
Appendix 42 EDD Specifications

APPENDICES

APPENDIX 18

STANDARD OPERATING PROCEDURES FOR CORE PROCESSING

1. Decontaminate all equipment prior to contact with core segments in a designated decontamination area. The decontamination steps are:
   (1) remove visible sediment from equipment using paper towels. Dispose of the towels in appropriate containers labeled as PCB waste;
   (2) wash thoroughly using laboratory grade detergent and a scrub brush in the laboratory sink (wash water can go down the sink drain);
   (2) rinse with distilled water;
   (3) rinse thoroughly with acetone under the hood in the laboratory, then allow to air dry;
   (4) rinse thoroughly with hexane under the hood in the laboratory, then allow to air dry; and
   (5) rinse with distilled water.

   Acetone and hexane rinsate will be collected and placed in appropriate disposal containers.

2. Transport the cores from the field staging area to the field processing facility at the end of each day for core sectioning and sample preparation. The cores must be kept on ice and maintained in a vertical position during transport and handling.

3. Upon the delivery of the cores to the processing laboratory, a hard copy of the corresponding field data will be presented to the processing lab coordinator. The field data sheet will be signed by both the sample collection/delivery personnel and the processing lab coordinator, and will serve as the chain of custody form from the field to the processing facility. Transcribe either electronically (diskette) or manually the field data for each core into the field processing database.

4. The processing laboratory coordinator will disperse the cores to each sample processing custodian for processing.

5. Before sectioning, the mass of the sediment contained within the core will be determined. Place the upright core on the scale and weigh to the nearest gram. Measure and record the depth of water in the core, and the total length of the core tube. Subtract the mass of the water and core tube from the total weight. The mass of the water and core tubing can be determined from the volume and the density of each.

6. Fasten the core tube in a clamping system (Figure 1) and place a container below the clamping system to collect water removed from the core and any spills that occur. Measure the total length of the core and record in the database.
   - If core stored in Aluminum tubing:
     - tap along the outside of the core tube with a spoon to estimate the sediment/water interface
     - drain the core by drilling a small hole about 1 in. above the estimated surface of the sediment and allow the water overlying the sediment core to drain, taking care not to disturb the surface of the sediment.
     - cut the core tube off approximately 1 in. above the estimated surface of the sediment

with a pipe cutter so the sediment/water interface can be seen
  - measure the total length of the recovered core and record in the database
  - mark the position of the top of the sediment on the outside of the core tube
- In Lexan® core tubes, the top of the sediment will be determined visually. Drain the core in the same manner used for the aluminum core tubes.

7. Based on the core length, mark the locations of where the core tube will be cut into segments (there are four different schemes according to which cores can be sectioned; Figure 2). The sample processing custodian will print labels for each jar necessary for each segment of the core.

8. The sample custodian will determine what analyses need to be performed on each core segment. The types of analyses selected for individual core segments depend on their position within the core, their physical characteristics or will be assigned on a random basis.
9. Verify the analyses for each core segment listed in the database (automatically assigned for Aroclor PCBs, TOC, moisture content, radionuclides, and archive samples). If necessary select additional analyses based on the field database tracking system (PCBs by USEPA Method 680, RCRA Metals & Dioxins, disposal characterization) or a combination of the tracking system and visual evaluation (Geotechnical characterization). Enter additional analyses in the database, print container labels and place on appropriate containers. Container specifications are provided in the QAPP. Update the field processing database, and generate hard copies of chain of custody forms.

10. Prepare a set of clean, 3-liter stainless steel bowls for all sectioned core segments. Mark bowls with core segment location (i.e., 0-2”). Place first bowl on balance to get a tare weight of the bowl. Create new entries in the field processing database by entering the top and bottom depth of each core segment.

11. Adjust the position of the core tube in the clamping system to provide adequate support and clearance for cutting the core into segments. For Lexan core tubes place a clean plastic cap on the top of the tube prior to each cut to minimize the loss of soft sediment during cutting.

12. Use a tubing cutter (aluminum core tube) or vibratory saw (Lexan® core tube) to cut the core tube at the bottom of the top core segment. Use a decontaminated blade to cut each segment (i.e., do not make two cuts with the same blade). Avoid disturbing the sediment. Use a clean stainless steel broad knife to separate the segment from the rest of the core after the core tube is cut, and place the segment into a stainless steel bowl (tare weight already established). Place the bowl with the core segment on the balance and obtain a weight.

13. Extrude the sediment from the core tube, and dispose of the tube in appropriate containers labeled for PCB waste. Give a physical description of each core segment to the sample custodian to record in the database. Characteristics include the general soil type based on the Unified Soil Classification System, approximate grain size, presence of observable biota, odor, and color. Classification of grain size will be a qualitative observation with the following types denoted: silt, fine sand, coarse sand, clay, organic matter, and gravel. The approximate proportion of each soil type within each sample will be estimated (i.e., primary, some, little, trace).

14. Identify any changes in sediment character within each segment. If changes in stratigraphy are observed within a core segment, then the nature and approximate length of the various layers will be verbally relayed to the sample custodian for inclusion in the database. Evidence of changes in stratigraphy include an abrupt change in grain size (e.g., from silt to wood chip layer) or change in soil color which may indicate oxidized or reduced sediments. If objects of cultural significance are observed during the core processing, note them in the database and set them aside for inspection by a qualified geomorphologist or archaeologist.

15. Homogenize the sediment in the 3 liter stainless steel bowls using a large stainless steel spoon. A 6 inch core segment will result in approximately 0.7 liters of sediment, a 24-inch segment will result in approximately 2.7 liters of sediment. Use the spoon to bring the sediment near the bottom of the bowl up to the top using a circular motion, similar to preparing food that requires mixing (e.g., cake batter). Repeat this procedure until all of the sediment near the bottom of the bowl has been brought to the surface at least twice. Continue mixing the contents of the bowl until an even texture and color is observed throughout the entire sample.

16. Fill the appropriately labeled containers with sample and package them in a cooler for shipment to the laboratories. The samples will be shipped out in batches of 20 environmental samples accompanied by appropriate QA/QC samples. Chill samples to 4°C with ice packed in Ziploc® bags or equivalent.

17. Process the next core segment as described in steps 13-17 until the whole core is sectioned and all sample jars are filled.

18. Prior to shipping the samples, confirm which project laboratory has capacity to receive samples the next day, and ship samples (with corresponding COC forms) accordingly *via* overnight delivery service or courier. All samples will be delivered to the analytical laboratories within 24 hours of processing, except for the samples for geotechnical characterization, which will be delivered to the laboratory on a less frequent basis.

19. Place all used stainless steel bowls and spoons at the decontamination station for proper decontamination prior to reuse.

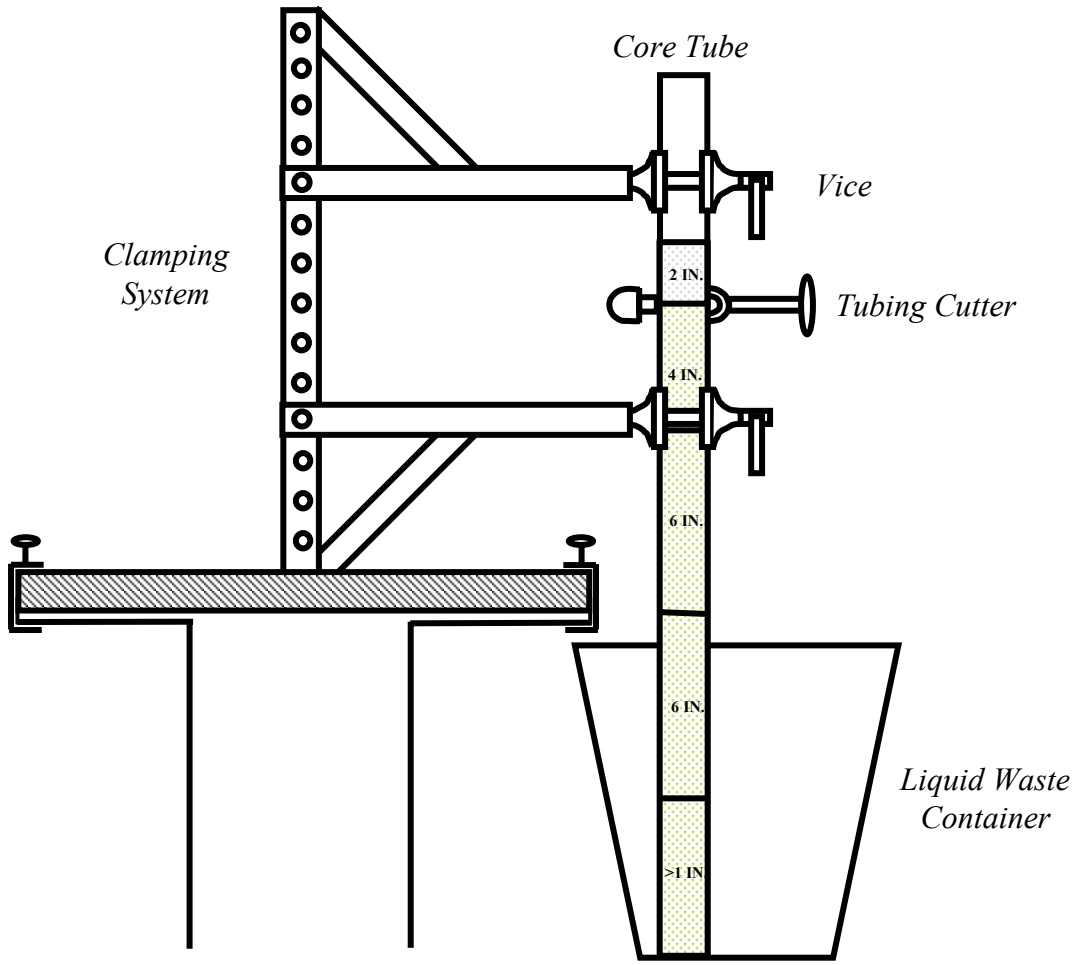

Figure 1. Core Clamping System Set-up.

SCALE : NONE

Quantitative Environmental Analysis, LLC

GENrem 137 September 2002

IF: D:\GENrem\sop_Appendix_A_B.ppt

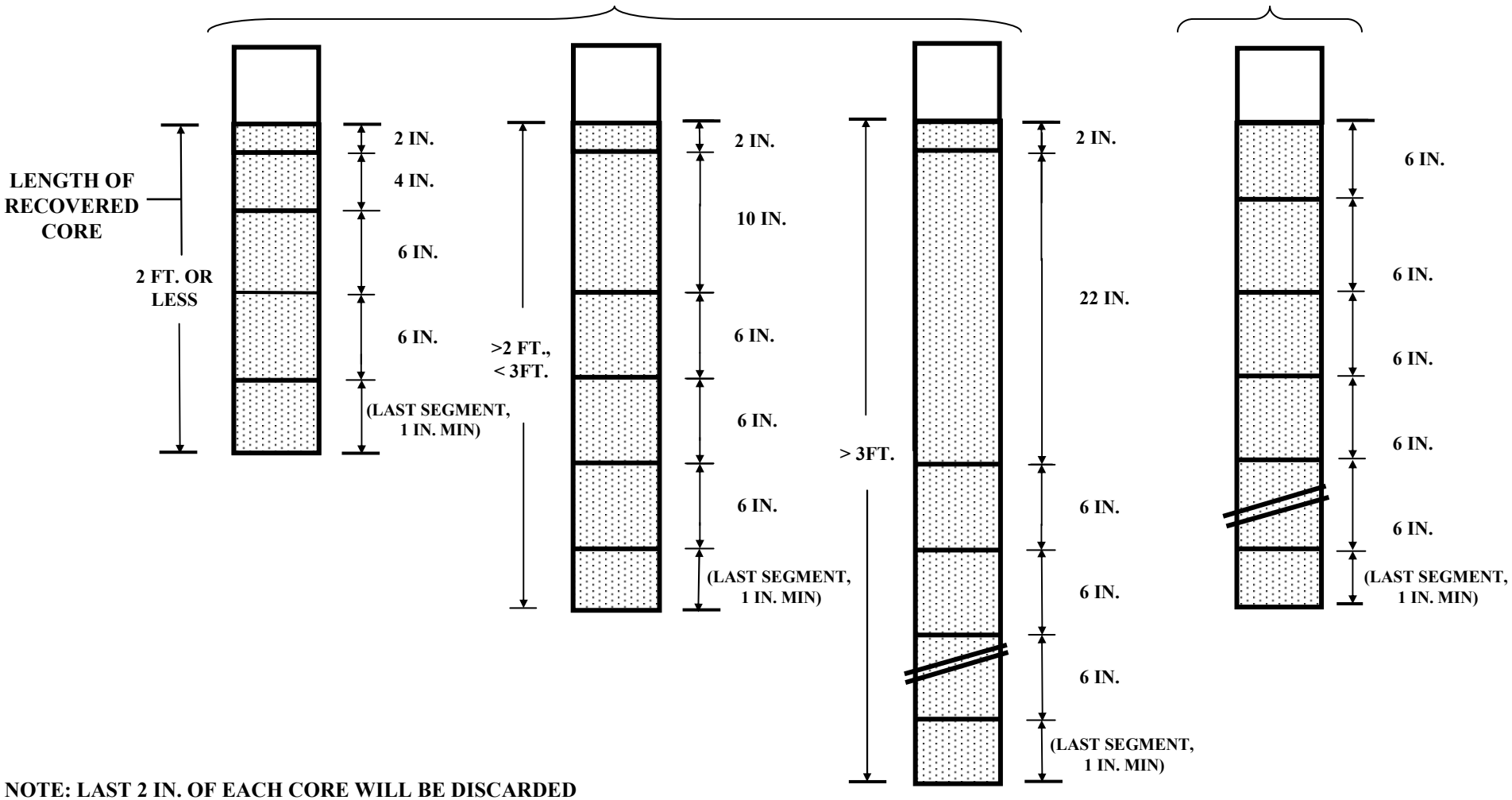

NOTE: LAST 2 IN. OF EACH CORE WILL BE DISCARDED

Figure 2. Core Segmentation Approach.

SCALE : NONE

QEA Quantitative Environmental Analysis, LLC

GENrem 137 September 2002

IF: D:\GENrem\FSP\Core_segmentation2.ppt