Application For Certification
Part1
Individual application for 2027 Model Year

Durability Group	VNSXEEVNN630
Evaporative / Refueling Family	N.A.
Test Group	VNSXV0000E6A
Test Group Description	BEV (Battery Electric Vehicle)
	Federal LDV / California PC
Exhaust Emission Standard	Federal Tier 4 Bin 0, CFV-ZEV, ILEV / California ZEV
Evaporative Emission Standard	N.A.
Vehicles Covered	NISSAN LEAF 75kWh (18 inch steel wheels) (50 States)
	NISSAN LEAF 75kWh (18 inch alloy wheels) (50 States)
	NISSAN LEAF 75kWh (19 inch wheels) (50 States)
Vehicles Run	USB153-03 (MCT TN:VNSX10093434)
Issue Date	April 6, 2026
Response Requested By	June 1, 2026
For Questions, Contact	Takuma Okamoto Telephone No. 248-488-4654

NISSAN MOTOR CO., LTD.

Revision on this page:

Part1
TABLE OF CONTENTS

Section	Title	Application	
		General	Individual
1	Correspondence and Communications	X	
2	Durability Group Description	X	
3	Evaporative/Refueling Family	X	
4	Durability Procedure Description	X	
5	Test Group Description		X
6	Test Vehicle Description		X
7	Test Results		X
8	Emission Testing Waiver Statement and Other Statement	X	X (Excluding BEV and Interim Tier 4)
9	OBD System Description		X
10	Description of Alternate-fueled Vehicles		X
11	AECD Description		X
12	Description of Vehicles Covered by Certificate and Test Parameters		
	(1) Starting	X	
	(2) Shifting	X	
	(a) Automatic transmission	X	
	(b) Electric vehicle	X	
	(c) Manual transmission		X
	(3) List of Certified Vehicles		X
	(4) Test Parameter		X
	(5) Fuel storage system leak test method	X	
13	Projected Sales	X	
14	Request for Certification		X
15	Other Information		
	(1) Fee Filing Form		X
16	Confidential Information		
	(1) OBD System Description (related to Sec 9 in Part 1)		X
	(2) Catalyst Information and GPF Information (related to Sec 2 in Part 1)	X	
	(3) Durability Procedures (related to Sec 4 in Part 1)	X	
	(a) Bench aging procedure for Exhaust Emission (flow)	X	
	(b) Bench aging procedure for Exhaust Emission (aging conditions)		X
	(c) Bench aging procedure for Evaporative Emission	X	
	(4) Projected Sales (related to Sec 13 in Part 1) and Applicable Standard	X	
	(5) Phase-in Plan (related to Sec 13 in Part 1)	X	
	(6) Catalyst Code Identification (related to Sec 3 in Part 2)	X	
	(7) Projected Fleet Average Calculation	X	
	(8) AECD Description (related to Sec 11 in Part 1)		X
	(9) Description of Electric Vehicles		
	(a) Battery Information (related to Sec 12(3) in Part 1)		X
	(b) Summary Information (related to Sec 7 in Part 1)		X
	(10) The procedure of setting maintenance mode (related to Sec12(1) in Part 1)	X	
	(11) Engine Oil Specification	X	
17	California ARB Information		
	(1) Supplemental Data Sheet and Certification Review Sheet		X
	(2) Vehicle Information Sheet (related to Sec 6 in Part 1)		X
	(3) Fill Pipe Specification		This Model is not applied.
	(4) "Vehicle Emission Control Information" Label Sample		X
	(5) Summary Information for Vehicle values for ZEV		X
	(6) List of 50F and PM emission test groups	X	
	(7) Attestation		X
	(8) Supplemental Information		
	(a) Road Load	X	
	(9) Information for § 1962.4. ZEV Requirements		X

5. Test Group Description

Test Group Name	Fuel	Sales area	Vehicle Class	Emission St'd Class
VNSXV0000E6A	Electricity	50S	Federal LDV / California PC	Federal Tier 4 Bin 0, CFV-ZEV, ILEV / California ZEV

6. Test Vehicle Description

Vehicle Class	Model Covered	Engine Code	Motor Model	Transmission	ETW (lbs)	GVWR (lbs)	Axle Ratio	Tire Size	Tire Type
Federal LDV / California PC	LEAF 75kWh (18 inch alloy wheels)	EVAAL	YM52	Auto (Fixed single Speed)	4500	5302	9.328	215/55R18	All season
	LEAF 75kWh (18 inch steel wheels)								
	LEAF 75kWh (19 inch wheels)				4750			235/45R19	

7. Test Results

Test Loc.	Test Number	Mode	Sales Area	Official Test (marked by X)	Certification Level
Mfr	VNSX10093434	MCT All-Electric Range Test	50 states	X	Refer to the Certification Summary Information Report

Certification Summary Information Report

Manufacturer	Nissan Motor Co., Ltd.	**Manufacturer Code**	NSX
Test Group	VNSXV0000E6A	**Evaporative/Refueling Family**	--
Certificate Number	--	**CARB Executive Order #**	--
Certificate Issue Date	--	**Certificate Revision Date**	--
Certificate Effective Date	--	**Conditional Certificate**	--
CSI Revision #	--	**CSI Submission/Revision Date**	03/09/2026 04:59:34 AM
Model Year	2027		

Test Group Information

CSI Type	New	**Running Change Reference Number**	--
GHG Exempt Status	Not Exempt		

Drive Sources and Fuel(s)

Drive Source #1: Electric Motor

Fuel	Basic Fuel Metering System	Lean Burn Strategy Indicator
Electricity	--	--

Hybrid Indicator	No		
Multiple Fuel Storage	--	**Rechargeable Energy Storage System Indicator**	Yes
Multiple Fuel Combustion	--	**Off-board Charge Capable Indicator**	Yes
Fuel Cell Indicator	No	**EPA Vehicle Class**	LDV
Federal Clean Fuel Vehicle	Yes	**Federal Clean Fuel Vehicle Standard**	ZEV
Federal Clean Fuel Vehicle ILEV	Yes	**California Partial Zero Emissions Vehicle Indicator**	No
Durability Group Name	VNSXEEVNN630	**Durability Group Equivalency Factor**	5.0
Reduced Fee Test Group	No	**Certification Region Code(s)**	FA, CA
Complies with HD GHG 2b/3 regulations?	No		
Introduction into Commerce Date	--	**CAP2000 Conditional Certificate?**	N/A
Independent Commercial Importer?	--	**Alternative Fuel Converter Certificate?**	--
SFTP Federal Composite Compliance Identifier	Not Applicable	**SFTP Tier 2 Composite CO Option**	No
SFTP LEV-III Composite Compliance Indicator	No		
OBD Compliance Type	CARB	**OBD Demonstration Vehicle Test Group**	VNSXT01.53CF
Test Group OBD Compliance Level	Full - no deficiencies	**Number of Test Group OBD Deficiencies**	0
OBD Deficiencies Comments	This vehicle is exempted from OBD requirement because this vehicle is BEV.		
Mfr Test Group Comments	Durability Group Equivalency Factor is not available because this vehicle is BEV.(5.0 is a dummy)		
Mfr Exhaust / Evap Standards Comments	--		

Certification Summary Information Report

Test Group	VNSXV0000E6A	**Evaporative/Refueling Family**	--

Models Covered by this Certificate

Carline Manufacturer	Division	Carline	Certification Region Code(s)	Drive System	Trans - Type	- # of Gears	Trans - Lockup
Nissan Motor Co., Ltd.	1 - NISSAN	22 - LEAF 75kWh (19 inch wheels)	Federal	2-Wheel Drive, Front	Automatic	1	Yes
Nissan Motor Co., Ltd.	1 - NISSAN	21 - LEAF 75kWh (18 inch alloy wheels)	California + CAA Section 177 states	2-Wheel Drive, Front	Automatic	1	Yes
Nissan Motor Co., Ltd.	1 - NISSAN	20 - LEAF 75kWh (18 inch steel wheels)	Federal	2-Wheel Drive, Front	Automatic	1	Yes
Nissan Motor Co., Ltd.	1 - NISSAN	21 - LEAF 75kWh (18 inch alloy wheels)	Federal	2-Wheel Drive, Front	Automatic	1	Yes
Nissan Motor Co., Ltd.	1 - NISSAN	20 - LEAF 75kWh (18 inch steel wheels)	California + CAA Section 177 states	2-Wheel Drive, Front	Automatic	1	Yes
Nissan Motor Co., Ltd.	1 - NISSAN	22 - LEAF 75kWh (19 inch wheels)	California + CAA Section 177 states	2-Wheel Drive, Front	Automatic	1	Yes

Engine Description

Hybrid Type	--	**Hybrid Description**	--
Engine Type	--	**Mfr Engine Description**	--
Engine Block Arrangement	--	**Mfr Engine Block Arrangement Description**	--
Camless Valvetrain Indicator	--	**Oil Viscosity/Classification**	
Number of Cylinders/Rotors	--	**Mechanically Variable Compression Ratio Indicator**	--

After Treatment Device(s) (ATD)

Mfr After Treatment Device (ATD) Comments	--
Direct Ozone Reduction (DOR) Device	--
Mfr Emission Control Device Comments	--

Official Test Numbers

Test Group Fuel	FTP	US06	SC03	Cold CO	Highway	EPA City Litmus Value	EPA City Litmus Threshold	EPA Highway Litmus Value	EPA Highway Litmus Threshold	CREE Weighting Factor
Electricity	--	--	--	--	--	--	--	--	--	--

Certification Summary Information Report

Test Group	VNSXV0000E6A	**Evaporative/Refueling Family**	--

Hybrid Electric Vehicle And Fuel Cell Information

Rechargable Energy Storage System	Battery(s)	**Rechargable Energy Storage System, if Other**	--
Battery Type	Lithium Ion	**Number of Battery Packs**	1
Total Voltage of Battery Packs	353	**Battery Energy Capacity**	222
Battery Specific Energy	166.7	**Battery Charger Type**	On-Board
Number of Capacitors	--	**Capacitor Rating (In Farads)**	--
Mfr Capacitor Comments	--		
Hydraulic System Description	--		
Regenerative Braking Type	Electrical Regen Brake		
Regenerative Braking Source	Front Wheels	**Driver Controlled Regenerative Braking**	No
Mfr Regenerative Braking Description	--		
Drive Motor(s)/Generator(s)	1		
Motor/Generator Type 1	Alternating Current 3-phase	**Rated Motor/Generator Power**	160
Mfr Fuel Cell Description	--		
Fuel Cell On-Board H2 Storage Capacity (kg)	--	**Usable H2 Fill Capacity (kg)**	--
Mfr Hybrid Electric/ Electric Vehicle Comments	--		

Certification Summary Information Report

Test Group	VNSXV0000E6A	**Evaporative/Refueling Family**	--

Emission Data Vehicle Information

Vehicle ID / Configuration	USB153 / 3	**Manufacturer Vehicle Configuration Number**	3
Original Test Group Name	VNSXV0000E6A	**Original Evaporative/Refueling Family**	--
Original Test Vehicle Model Year	2027		

Vehicle Model

Represented Test Vehicle Make	NISSAN	**Represented Test Vehicle Model**	LEAF 75kWh (19 inch wheels) PLATINUM+

Leak Family Details

Leak Family Identifier	--	**Leak Family Name**	--

Drive Sources and Fuel System Details

Drive Source and Fuel#	Drive Source	Fuel
1	Electric Motor	Electricity

Hybrid Indicator	No		
Multiple Fuel Storage	--	**Multiple Fuel Combustion**	--
Fuel Cell Indicator	No	**Rechargeable Energy Storage System Indicator**	Yes
Rechargeable Energy Storage System	Battery(s)	**Rechargeable Energy Storage System, if 'Other'**	--
Off-board charge Capable Indicator	Yes		
Odometer Correction -- Initial	0	**Odometer Correction Factor**	0.97
Odometer Correction Sign	- = System Miles is equal to (Test odometer reading - Initial system miles) * Correction factor		
Odometer Correction Units	Miles		
Engine Code	EVAAL	**Rated Horsepower**	214
Displacement (liters)	99.999		
Air Aspiration Method	Naturally Aspirated	**Air Aspiration Method, if 'Other'**	
Number of Air Aspiration Devices	--	**Air Aspiration Device Configuration**	--
Charge Air Cooler Type	--	**Drive Mode While Testing**	2-Wheel Drive, Front
Shift Indicator Light Usage	Not eqipped	**Aged Emission Components**	4,000 (mi)
Curb Weight (lbs)	4399	**Equivalent Test Weight (pounds)**	4750
GVWR (lbs)	5302	**N/V Ratio**	117.8
Axle Ratio	9.33		
Transmission Type	Auto(Fixed Single Speed)	**# of Transmission Gears**	1
Transmission Lockup	Yes	**Creeper Gear**	No

Dynamometer Coefficients:

	Target Coefficients			Set Coefficients			
Coefficient Category	**A (lbf)**	**B (lbf/mph)**	**C (lbf/mph**2)**	**A (lbf)**	**B (lbf/mph)**	**C (lbf/mph**2)**	**EPA Calculated Total Road Load Horse Power for City/Highway/Evap Coefficients**
City/Highway/Evap	38.98	0.4005	0.01691	21.27	0.0433	0.01851	13.5

Certification Summary Information Report

Test Group	VNSXV0000E6A	**Evaporative/Refueling Family**	--

Emission Control Device Comments	Displacement is entered as a dummy.
Manufacturer Test Vehicle Comments	STANDARD mode.

Certification Summary Information Report

Test Group	VNSXV0000E6A	**Evaporative/Refueling Family**	--

Test #	**VNSX10093434**	**Test Procedure**	**77 - Multi-Cycle Test (MCT)**
Exhaust Test # for this Evap Test	--	**Test Fuel Type**	62 - Electricity
Test Date	02/18/2025	**Fuel**	Electricity
Fuel Batch ID	--	**Fuel Calibration Number**	--
Vehicle Class	LDV/Passenger Car	**DF Type**	Mfr. Determined
Verify Test Lab ID	560-2 Okatsukoku		
E10 Evaporative Test Measurement Method	--		
Test Start Odometer Reading	2135	**Odometer Units**	M
4WD Test Dyno	No	**Diesel Adjustment Factor Usage**	--
State of Charge Delta	--		
Drive Cycle Speed Tolerance Criteria	Used Part 1066 (+/- 2.0 mph, +/- 1.0 sec)	**Road Speed Fan Usage**	Yes

PHEV/EV Charge Depleting Test Information

Recharge Event Voltage	240	**Recharge Event Energy (kiloWatt-hours)**	84.2041
Charge Depleting Range (Calculated miles)	393.124	**Charge Depleting Range (Actual miles)**	393.124
Charge Depleting Range Highway (Calculated miles)	343.434	**Derived 5-Cycle Coefficient Model Year**	--
All Electric Range Unadjusted (miles)	--	**Equivalent All Electric Range (miles)**	393.124
Number of Charge Depleting Bags/Phases Conducted	8	**Transition Bag/Phase Number**	--

Charge Depleting Bag/Phase #1

Test Result/Emission Name	Unrounded Test Result
Actual Distance Driven (miles)	7.426
Carbon-Related Exhaust Emissions	0
Drive Trace Absolute Speed Change Rating	-1.71
Drive Trace Energy Economy Rating	-1.15
Drive Trace Inertia Work Ratio Rating	-2.62
Integrated DC KW-HRS	1.49781
Manufacturer Fuel Economy	22.2005022

Charge Depleting Bag/Phase #2

Test Group	VNSXV0000E6A	Evaporative/Refueling Family	--

Test Result/Emission Name	Unrounded Test Result
Actual Distance Driven (miles)	10.243
Carbon-Related Exhaust Emissions	0
Drive Trace Absolute Speed Change Rating	-1.53
Drive Trace Energy Economy Rating	0.1
Drive Trace Inertia Work Ratio Rating	-2.02
Integrated DC KW-HRS	2.30926
Manufacturer Fuel Economy	24.8145656

Charge Depleting Bag/Phase #3

Test Result/Emission Name	Unrounded Test Result
Actual Distance Driven (miles)	7.43
Carbon-Related Exhaust Emissions	0
Drive Trace Absolute Speed Change Rating	-1.11
Drive Trace Energy Economy Rating	-0.97
Drive Trace Inertia Work Ratio Rating	-1.83
Integrated DC KW-HRS	1.46604
Manufacturer Fuel Economy	21.7179097

Charge Depleting Bag/Phase #4

Test Result/Emission Name	Unrounded Test Result
Actual Distance Driven (miles)	223.727
Carbon-Related Exhaust Emissions	0
Drive Trace Absolute Speed Change Rating	0
Drive Trace Energy Economy Rating	0
Drive Trace Inertia Work Ratio Rating	0
Integrated DC KW-HRS	62.87019
Manufacturer Fuel Economy	30.9305321

Charge Depleting Bag/Phase #5

Test Result/Emission Name	Unrounded Test Result
Actual Distance Driven (miles)	7.431
Carbon-Related Exhaust Emissions	0
Drive Trace Absolute Speed Change Rating	-0.67
Drive Trace Energy Economy Rating	-0.45
Drive Trace Inertia Work Ratio Rating	-1.48
Integrated DC KW-HRS	1.4358
Manufacturer Fuel Economy	21.2670722

Charge Depleting Bag/Phase #6

Test Group	VNSXV0000E6A	Evaporative/Refueling Family	--

Test Result/Emission Name	Unrounded Test Result
Actual Distance Driven (miles)	10.232
Carbon-Related Exhaust Emissions	0
Drive Trace Absolute Speed Change Rating	0.02
Drive Trace Energy Economy Rating	-0.04
Drive Trace Inertia Work Ratio Rating	-0.3
Integrated DC KW-HRS	2.2517
Manufacturer Fuel Economy	24.2220565

Charge Depleting Bag/Phase #7

Test Result/Emission Name	Unrounded Test Result
Actual Distance Driven (miles)	7.433
Carbon-Related Exhaust Emissions	0
Drive Trace Absolute Speed Change Rating	-0.71
Drive Trace Energy Economy Rating	-0.57
Drive Trace Inertia Work Ratio Rating	-0.93
Integrated DC KW-HRS	1.4334
Manufacturer Fuel Economy	21.2258106

Charge Depleting Bag/Phase #8

Test Result/Emission Name	Unrounded Test Result
Actual Distance Driven (miles)	10.716
Carbon-Related Exhaust Emissions	0
Drive Trace Absolute Speed Change Rating	0
Drive Trace Energy Economy Rating	0
Drive Trace Inertia Work Ratio Rating	0
Integrated DC KW-HRS	3.2377
Manufacturer Fuel Economy	33.2556099

Manufacturer Test Comments

AC Energy[Wh/mile] UDDS/Highway:214/245 , Net Vehicle DC energy consumption [DC Wh/mile] UDDS/Highway:195/223 , MFR FE[mpg] UDDS/Highway:157.4/137.5 , Charge Time[sec]:26524 NISSAN Leaf's OBC was upgraded from 7kw to 11kw, so only the recharging portion was tested, and the results are listed.

Certification Summary Information Report

Test Group VNSXV0000E6A **Evaporative/Refueling Family** --

Certification Region	Useful Life	Standard Level	Emission Name	Rounded Result	RAF	NMOG/NM HC Ratio	Diesel Adjustment Factor	Add DF	Mult DF	Certification Level	Standard	Pass/Fail
Fed	150,000 miles	Federal Tier 4 Bin 0	CREE	0	--	--	--	0	--	0	--	--
Fed	150,000 miles	Federal Tier 4 Bin 0	CREE	0	--	--	--	0	--	0	--	--
Fed	150,000 miles	Federal Tier 4 Bin 0	CREE	0	--	--	--	0	--	0	--	--
Fed	150,000 miles	Federal Tier 4 Bin 0	CREE	0	--	--	--	0	--	0	--	--
Fed	150,000 miles	Federal Tier 4 Bin 0	CREE	0	--	--	--	0	--	0	--	--
Fed	150,000 miles	Federal Tier 4 Bin 0	CREE	0	--	--	--	0	--	0	--	--
Fed	150,000 miles	Federal Tier 4 Bin 0	CREE	0	--	--	--	0	--	0	--	--
Fed	150,000 miles	Federal Tier 4 Bin 0	CREE	0	--	--	--	0	--	0	--	--
CA	150,000 miles	California ZEV	CREE	0	--	--	--	0	--	0	--	--
CA	150,000 miles	California ZEV	CREE	0	--	--	--	0	--	0	--	--
CA	150,000 miles	California ZEV	CREE	0	--	--	--	0	--	0	--	--
CA	150,000 miles	California ZEV	CREE	0	--	--	--	0	--	0	--	--
CA	150,000 miles	California ZEV	CREE	0	--	--	--	0	--	0	--	--
CA	150,000 miles	California ZEV	CREE	0	--	--	--	0	--	0	--	--
CA	150,000 miles	California ZEV	CREE	0	--	--	--	0	--	0	--	--
CA	150,000 miles	California ZEV	CREE	0	--	--	--	0	--	0	--	--

Fuel Properties

Certification Summary Information Report

Test Group	VNSXV0000E6A	**Evaporative/Refueling Family**	--

Consolidated List of Standards

Exhaust Standards

Cert Region	California + CAA Section 177 states	**Cert/In-Use Code**	Cert
Vehicle Class	LDV/Passenger Car	**Standard Level**	California ZEV
Fuel	Electricity	**Test Procedure**	Multi-Cycle Test (MCT)

Useful Life	Emission Name	Rounded Result	RAF	NMOG / NMHC	Upward Diesel Adjustment Factor	Downward Diesel Adjustment Factor	Mult DF	Add DF	Std
150,000 miles	CO	--	--	--	--	--	--	0	0.0
150,000 miles	CREE	--	--	--	--	--	--	0	999.999

Cert Region	Federal	**Cert/In-Use Code**	Cert
Vehicle Class	LDV/Passenger Car	**Standard Level**	Federal Tier 4 Bin 0
Fuel	Electricity	**Test Procedure**	Multi-Cycle Test (MCT)

Useful Life	Emission Name	Rounded Result	RAF	NMOG / NMHC	Upward Diesel Adjustment Factor	Downward Diesel Adjustment Factor	Mult DF	Add DF	Std
150,000 miles	CO	--	--	--	--	--	--	0	0.0
150,000 miles	CREE	--	--	--	--	--	--	0	999.999

Certification Summary Information Report

Test Group	VNSXV0000E6A	Evaporative/Refueling Family	--

Glossary

Useful Life

4	4,000 miles	120	120,000 miles
50	50,000 miles	150	150,000 miles
100	100,000 miles		

Emission Name

HC-TOTAL	Total Hydrocarbon	COMB-CREE	Combined Carbon-Related Exhaust Emissions
CO	Carbon Monoxide	COMB-OPT-CREE	Combined Optional Carbon-Related Exhaust Emissions
CO2	Carbon dioxide	HC-TOTAL-EQUIV	Total Hydrocarbon equivalent - Evap only
CREE	Carbon-Related Exhaust Emissions	METHANE-COMB	Combined CH4 for HD 2b/3 vehicles only
OPT-CREE	Optional Carbon-Related Exhaust Emissions	N2O-COMB	Combined Nitrous Oxide for HD 2b/3 vehicles only
NOX	Nitrogen Oxide	LEAK-DIA	Effective Leak Diameter (inches)
PM	Particulate Matter	LEAK-GAS CAP	Gas Cap Leakage (cc/min)
PM-COMP	SFTP Composite Particulate Matter	CO2-COMB	Combined Carbon Dioxide for HD 2b/3 Vehicles Only
HC-NM	Non-methane Hydrocarbon	KW-HRS	Integrated DC KW-HRS
OMHCE	Organic material Hydrocarbon Equivalent	CH4 BAG 1	Bag 1 Methane
OMNMHCE	Organic material non-methane HC equivalent	CH4 BAG 2	Bag 2 Methane
NMOG	Non-methane organic gases	CH4 BAG 3	Bag 3 Methane
HCHO	Formaldehyde	CH4 BAG 4	Bag 4 Methane
H3C2HO	Acetaldehyde	CO BAG 1	Bag 1 Carbon Monoxide
HC-NM+NOX	SFTP Non-methane Hydrocarbon + Nitrogen Oxides for US06 or SC03	CO BAG 2	Bag 2 Carbon Monoxide
HC-NM+NOX-COMP	SFTP Composite Non-methane Hydrocarbon + Nitrogen Oxides	CO BAG 3	Bag 3 Carbon Monoxide
CO-COMP	SFTP Composite Carbon Monoxide	CO BAG 4	Bag 4 Carbon Monoxide
ETHANOL	C2H5OH - Ethanol	NMOG BAG 1	Bag 1 Non-methane organic gases
FE BAG 1	Bag 1 Fuel Economy	NMOG BAG 2	Bag 2 Non-methane organic gases
FE BAG 2	Bag 2 Fuel Economy	NMOG BAG 3	Bag 3 Non-methane organic gases
FE BAG 3	Bag 3 Fuel Economy	NMOG BAG 4	Bag 4 Non-methane organic gases
FE BAG 4	Bag 4 Fuel Economy	ACT-DISTANCE BAG 1	Bag 1 Actual Distance
MFR FE	Manufacturer Fuel Economy	ACT-DISTANCE BAG 2	Bag 2 Actual Distance
HC	Hydrocarbon for Running Loss and ORVR	ACT-DISTANCE BAG 3	Bag 3 Actual Distance
METHANE	CH4 - Methane	ACT-DISTANCE BAG 4	Bag 4 Actual Distance
METHANOL	CH3OH - Methanol	HC-TOTAL BAG 1	Bag 1 Total Hydrocarbon
N2O	Nitrous Oxide	HC-TOTAL BAG 2	Bag 2 Total Hydrocarbon
SPITBACK	Spitback Hydrocarbon in grams	HC-TOTAL BAG 3	Bag 3 Total Hydrocarbon
AMP-HRS	Integrated Amp-hours	HC-TOTAL BAG 4	Bag 4 Total Hydrocarbon
START-SOC	System Start State of Charge Watt-hours	WATT-HRS BAG 1	Bag 1 Watt Hours
END-SOC	System End State of Charge Watt-hours	WATT-HRS BAG 2	Bag 2 Watt Hours

Certification Summary Information Report

Test Group	VNSXV0000E6A	**Evaporative/Refueling Family**	--
ACT-DISTANCE	Actual Distance Driven (miles)	WATT-HRS BAG 3	Bag 3 Watt Hours
AS-VOLT	Average System Voltage	WATT-HRS BAG 4	Bag 4 Watt Hours
CO2 BAG 1	Bag 1 Carbon Dioxide	WATT-HRS	Watt Hours
CO2 BAG 2	Bag 2 Carbon Dioxide	HC-NM BAG 1	Bag 1 Non-methane Hydrocarbon
CO2 BAG 3	Bag 3 Carbon Dioxide	HC-NM BAG 2	Bag 2 Non-methane Hydrocarbon
CO2 BAG 4	Bag 4 Carbon Dioxide	HC-NM BAG 3	Bag 3 Non-methane Hydrocarbon
NMOG+NOX	Non-methane organic gases plus Nitrogen Oxides	HC-NM BAG 4	Bag 4 Non-methane Hydrocarbon
NMOG+NOX-COMP	SFTP Composite Non-methane Organic Gases + Nitrogen Oxides	N2O BAG 1	Bag 1 Nitrous Oxide
DT-IWRR	Drive Trace Inertia Work Ratio Rating	N2O BAG 2	Bag 2 Nitrous Oxide
DT-ASCR	Drive Trace Absolute Speed Change Rating	N2O BAG 3	Bag 3 Nitrous Oxide
DT-EER	Drive Trace Energy Economy Rating	N2O BAG 4	Bag 4 Nitrous Oxide
Certification Region			
CA	California + CAA Section 177 states	FA	Federal
Exhaust Emission Standard Level			
B1	Federal Tier 2 Bin 1	HDV2B340	Federal Tier 3 HD Class 2b Transitional Bin 340
B2	Federal Tier 2 Bin 2	HDV2B250	Federal Tier 3 HD Class 2b Bin 250
B3	Federal Tier 2 Bin 3	HDV2B200	Federal Tier 3 HD Class 2b Bin 200
B4	Federal Tier 2 Bin 4	HDV2B170	Federal Tier 3 HD Class 2b Bin 170
B5	Federal Tier 2 Bin 5	HDV2B150	Federal Tier 3 HD Class 2b Bin 150
B6	Federal Tier 2 Bin 6	HDV2B0	Federal Tier 3 HD Class 2b Bin 0
B7	Federal Tier 2 Bin 7	HDV3B630	Federal Tier 3 HD Class 3 Transitional Bin 630
B8	Federal Tier 2 Bin 8	HDV3B570	Federal Tier 3 HD Class 3 Transitional Bin 570
B9	Federal Tier 2 Bin 9	HDV3B400	Federal Tier 3 HD Class 3 Bin 400
B10	Federal Tier 2 Bin 10	HDV3B270	Federal Tier 3 HD Class 3 Bin 270
B11	Federal Tier 2 Bin 11	HDV3B230	Federal Tier 3 HD Class 3 Bin 230
HDV1	HDV1 (Federal HD chassis Class 2b GVW 8501-10000)	HDV3B200	Federal Tier 3 HD Class 3 Bin 200
HDV2	HDV2 (Federal HD chassis Class 3 GVW 10001-14000)	HDV3B0	Federal Tier 3 HD Class 3 Bin 0
L2	California LEV-II LEV	L4SULEV100	California LEV-IV SULEV100
L2OP	California LEV-II LEV Optional	L4SULEV125	California LEV-IV SULEV125
U2	California LEV-II ULEV	L4SULEV15	California LEV-IV SULEV15
S2	California LEV-II SULEV	L4SULEV150	California LEV-IV SULEV150
ZEV	California ZEV	L4SULEV170	California LEV-IV SULEV170
OT	Other	L4SULEV175	California LEV-IV SULEV175
T1	Federal Tier 1	L4SULEV20	California LEV-IV SULEV20
PZEV	California PZEV	L4SULEV200	California LEV-IV SULEV200
L2LEV160	California LEV-II LEV160	L4SULEV230	California LEV-IV SULEV230
L2ULEV125	California LEV-II ULEV125	L4SULEV25	California LEV-IV SULEV25
L2SULEV30	California LEV-II SULEV30	L4SULEV30	California LEV-IV SULEV30
L2LEV395	California LEV-II LEV395	L4SULEV75	California LEV-IV SULEV75

Certification Summary Information Report

Test Group	VNSXV0000E6A	**Evaporative/Refueling Family**	--
L2ULEV340	California LEV-II ULEV340	L4SULEV85	California LEV-IV SULEV85
L2LEV630	California LEV-II LEV630	L4ULEV125	California LEV-IV ULEV125
L2ULEV570	California LEV-II ULEV570	L4ULEV200	California LEV-IV ULEV200
L3LEV160	California LEV-III LEV160	L4ULEV250	California LEV-IV ULEV250
L3ULEV125	California LEV-III ULEV125	L4ULEV270	California LEV-IV ULEV270
L3ULEV70	California LEV-III ULEV70	L4ULEV40	California LEV-IV ULEV40
L3ULEV50	California LEV-III ULEV50	L4ULEV400	California LEV-IV ULEV400
L3SULEV30	California LEV-III SULEV30	L4ULEV50	California LEV-IV ULEV50
L3SULEV20	California LEV-III SULEV20	L4ULEV60	California LEV-IV ULEV60
L3LEV395	California LEV-III LEV395	L4ULEV70	California LEV-IV ULEV70
L3ULEV340	California LEV-III ULEV340	T4B170	Federal Tier 4 MDV Bin 170
L3ULEV250	California LEV-III ULEV250	T4B150	Federal Tier 4 MDV Bin 150
L3ULEV200	California LEV-III ULEV200	T4B125	Federal Tier 4 MDV Bin 125
L3SULEV170	California LEV-III SULEV170	T4B100	Federal Tier 4 MDV Bin 100
L3SULEV150	California LEV-III SULEV150	T4B85	Federal Tier 4 MDV Bin 85
L3LEV630	California LEV-III LEV630	T4B75	Federal Tier 4 MDV Bin 75
L3ULEV570	California LEV-III ULEV570	T4B70	Federal Tier 4 Bin 70
L3ULEV400	California LEV-III ULEV400	T4B65	Federal Tier 4 Bin 65
L3ULEV270	California LEV-III ULEV270	T4B60	Federal Tier 4 Bin 60
L3SULEV230	California LEV-III SULEV230	T4B55	Federal Tier 4 Bin 55
L3SULEV200	California LEV-III SULEV200	T4B50	Federal Tier 4 Bin 50
T3B160	Federal Tier 3 Bin 160	T4B45	Federal Tier 4 Bin 45
T3B125	Federal Tier 3 Bin 125	T4B40	Federal Tier 4 Bin 40
T3B110	Federal Tier 3 Transitional Bin 110	T4B35	Federal Tier 4 Bin 35
T3B85	Federal Tier 3 Transitional Bin 85	T4B30	Federal Tier 4 Bin 30
T3SULEV30	Federal Tier 3 Transitional LEV-II SULEV30 Carryover	T4B25	Federal Tier 4 Bin 25
T3B70	Federal Tier 3 Bin 70	T4B20	Federal Tier 4 Bin 20
T3B50	Federal Tier 3 Bin 50	T4B15	Federal Tier 4 Bin 15
T3B30	Federal Tier 3 Bin 30	T4B10	Federal Tier 4 Bin 10
T3B20	Federal Tier 3 Bin 20	T4B5	Federal Tier 4 Bin 5
T3B0	Federal Tier 3 Bin 0	T4B0	Federal Tier 4 Bin 0
HDV2B395	Federal Tier 3 HD Class 2b Transitional Bin 395		

Transmission Type Code			
AMS	Automated Manual- Selectable (e.g. Automated Manual with paddles)	M	Manual
A	Automatic	OT	Other
AM	Automated Manual	SA	Semi-Automatic
CVT	Continuously Variable	SCV	Selectable Continuously Variable (e.g. CVT with paddles)

Drive System Code			
4	4-Wheel Drive	P	Part-time 4-Wheel Drive

Certification Summary Information Report

Test Group	VNSXV0000E6A	**Evaporative/Refueling Family**	--
F	2-Wheel Drive, Front	A	All Wheel Drive
R	2-Wheel Drive, Rear		

Additional Terms and Acronyms

AFC	Alternative Fuel Converter	ICI	Independent Commercial Importer
CSI	Certificate Summary Information	ORVR	Onboard Refueling Vapor Recovery
DF	Deterioration Factor	SIL	Shift Indicator Light
Evap	Evaporation, Evaporative	Trans	Transmission

9. OBD System Description

Refer to the confidential section.

10. Description of Alternate-fueled Vehicles

N.A.

11. AECD Description

Refer to the confidential section.

12. Description of Vehicles Covered by Certificate and Test Parameter

(2) Shifting

(c) Manual transmission

N.A.

12. Description of Vehicles Covered by Certificate and Test Parameter

(3) List of Certified Vehicles

Durability Group VNSXEEVNN630
Test Group VNSXV0000E6A

[Vehicle Identification]

Carline	Trim Line	Trans./OD	Engine Code	Fuel	ETW (lbs)	SIL	Battery Capacity(kWh)	Vehicle Class	Sales Area 50S	Sales Area CAN
LEAF 75kWh (18 inch alloy wheels)	SV+	Auto (Fixed single Speed)	EVAAL	Electricity	4500	N.A.	78	Federal LDV/ California PC	X	
LEAF 75kWh (18 inch steel wheels)	S+								X	
LEAF 75kWh (19 inch wheels)	PLATINUM+				4750				X	
LEAF 75kWh (18 inch alloy wheels)	SV+	Auto (Fixed single Speed)	EVAAL	Electricity	4500	N.A.	78	Canada LDV		X
LEAF 75kWh (18 inch steel wheels)	S+									X
LEAF 75kWh (19 inch wheels)	PLATINUM+				4750					X

[Propulsion system]
-Motor

Model	Type	Rated Power (kW)	Rated Torque (Nm)	Maximum Speed (rpm)	Number of Motor per vehicle	Drive type
YM52	Alternating Current 3-phase	160 @(4400)-11700rpm	355 @0-(4300)rpm	11977	1	2-wheel Drive, front

-Traction Inverter

Type	Modulation
DC/AC 3phase	PWM

-Battery

Refer to the confidential section. Sec16(9)-(a)

-Regenerative Braking

Type	Braking Source	Driver controlled Regen Braking
Electrical Regen. Brake	Front Wheels	None

-Standard Charger

Type	Input Voltage(V)
Conductive On-board	AC 100 - 240 (<50A)

Refer to the attachment for other specs required by § 1962.3. Electric Vehicle Charging Requirements

[Other system]
-Climate control system
The climate control system equipped with electric motor-driven compressor/ Heat-Pump (SV+, PLATINUM+) + Air PTC heater system
The system uses HFC134a refrigerant and operates on 12volts DC/ 345 volts AC.
The vehicle are also equipped with a "pre-conditioning" system that turns on air conditioning system before passengers enter the car.
The vehicle is not equipped with a fuel-fired heating system.

Charging device specifications

Items	Regulation No.	Requirements	Specifications
DC Charger	§ 1962.4 (i)(3)6.	Maximum allowable direct current fast charge capability	410 A
AC Charger Inlet	§ 1962.3(c)(1)	Meeting all the specifications applicable to AC Level 1 and Level 2 charging contained in Society of Automotive Engineers (SAE) Surface Vehicle Recommended Practice SAE J1772 REV OCT 2017	Yes
		Minimum output of 5.76 kilowatts (calculated as 24 amps at 240 volts AC) or capable of providing sufficient power to enable charging from a state of discharge to a full charge in less than 4 hours.	More than 5.76 kilowatts
Charging Cord	§ 1962.3(c)(3)(A)	Minimum of 20 feet in length	20 feet or more than 20 feet
	§ 1962.3(c)(3)(B)1.	AC Level 1 minimum amperage capability shall be 12 amps.	12 amps or more than 12 amps
	§ 1962.3(c)(3)(B)2.	AC Level 2 minimum amperage capability shall be 24 amps.	24 amps or more than 24 amps
	§ 1962.3(c)(3)(B)3.	The cord shall be configurable by the user, without the use of tools, to facilitate plugging into an appropriate NEMA standard outlet to facilitate Level 1 and Level 2 charging.	Yes
	§ 1962.3(c)(3)(C)	User selectable, without the use of a tool, to downgrade the amperage during charging	Yes
	§ 1962.3(c)(3)(C)1.	For AC Level 1 charging, at a minimum, selectable by the user to charge using 12 amps or 8 amps	Yes
	§ 1962.3(c)(3)(C)2.	If the cord supports amperage above 24 amps for AC Level 2 charging, selectable by the user to charge at 24 amps or at 16 amps	Yes
	§ 1962.3(c)(3)(C)3.	The user selection feature must either be integrated into the cord or in the vehicle itself (e.g., via a charging configuration menu or setting in the vehicle).	Car navigation system
	§ 1962.3(c)(3)(D)	Tested and listed by a NRTL as meeting requirements for electric vehicle supply equipment contained in Underwriter Laboratory (UL) 2594, “Standard for Electric Vehicle Supply Equipment”	FFWA.E354307
DC Charger Inlet	§ 1962.3(c)(4)	All battery electric vehicles must be equipped with a DC inlet that meets the specifications applicable to DC charging contained in SAE J1772 REV OCT 2017, SAE Electric Vehicle and Plug in Hybrid Electric Vehicle Conductive Charger Coupler	Yes, by using an adapter
	§ 1962.3(c)(5)	The adaptor and alternative inlet must be tested and approved by a NRTL.	An adaptor approved by NRTL will be supplied with a vehicle. Refer to the certificate in the next page.

For charging system information, see two pages after this page.

CERTIFICATE OF COMPLIANCE

Certificate Number: **SGSNA/25/GZ/00153X**

Contract Number: 802138
Certificate Project Number: GZ-CERT250300804

Certified Product: Electric Vehicle Adapter (CCS1 to NACS adapter)
Trademarks: -
Model(s): LEADPCCS500ABLKUS-OEM
Technical Data: 1000VDC, 500A Max
(Pilot contacts rated 2 A, 30 VDC)

Certificate Holder: Dropcases Limited
Office 2609, Global Gateway Tower, 63 Wing Hong Street, Cheung Sha Wan, Kowloon, Hong Kong, China

This certificate supercedes previous certificates issued with the same certificate number. Certification is valid when products are indicated on the SGS directory of certified products at www.sgs.com or using the QR code below. The product is certified according to ISO/IEC Guide 17067, Conformity assessment - Fundamentals of product certification, System 3, and in accordance with:

UL 2252, Issue Number: 1, Date July 28, 2023
CSA C22.2 No. 282-17, Second Edition, Rev. December 2022

Certification Condition

Consideration should be given to the following when the device is used:
The device is not suitable for interrupting the flow of current by connecting or disconnecting the mating devices.

Authorized by:

Jason Wei
Certifier

Effective date: 13 May 2025

SGS operates certification programs under the authority of several accreditation or recognition bodies including A2LA, ANAB, OSHA NRTL, and Standards Council of Canada. This certificate is issued by the company under its General Conditions for Certification Services accessible at https://www.sgs.com/en/terms-and-conditions. Attention is drawn to the limitations of liability defined therein and in the Test Report here above mentioned which findings are reflected in this Certificate. Any unauthorized alteration, forgery or falsification of the content or appearance of this document is unlawful and offenders may be prosecuted to the fullest extent of the law.

Certification Body

Connectivity & Products, a division of SGS North America Inc.
620 Old Peachtree Road, Ste. 100, Suwanee, GA 30024, USA
t +1 770 570 1800 f +1 770 277 1240 www.sgs.com

Charging system information (1)

Charging system information (Summary of ownwer'a manual)

Type of charging	Charge port	Charge connector	Control box	Power	Instructions
AC Level 2: Normal charge (AC 220–240 volt)	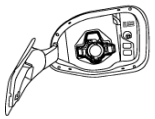	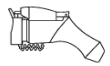 Normal charge connector			Use the charging device (AC 220-240 volt) that is installed in your home.
	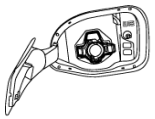	Normal charge connector	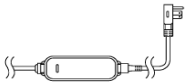 Domestic plug	Electrical outlet	Use the L1 & L2 EVSE. Use only a 220-240 volt, 50 amp, dedicated outlet installed by a qualified electrician.

NORMAL-WBTA0002X

Type of charging	Charge port	Charge connector	Control box	Power	Instructions
AC Level 1: Trickle charge (AC 110–120 volt)	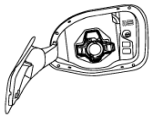	Normal charge connector	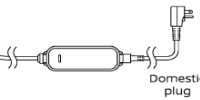 Domestic plug	Electrical outlet	Use the L1&L2-EVSE. Use only a 110-120 volt, 15 amp, dedicated outlet installed by a qualified electrician.

NORMAL-WBTA0033X

This vehicle is an electric vehicle and it requires electricity to operate. The Li-ion battery is the only source of power to operate the vehicle.

It is important to conserve power and plan your charging needs when you drive to avoid completely discharging the Li-ion battery.

There are the following methods of charging the Li-ion battery:

- AC Level 2: Normal charge
- AC Level 1: Trickle charge
- DC Level 3: DC Fast Charge

The time to completely charge the vehicle Li-ion battery varies based on the state of charge of the Li-ion battery, condition and age of the Li-ion battery, temperature of the Li-ion battery, ambient temperature and condition of the power source connected to the vehicle, and whether the electric equipment (such as the air conditioner, which consumes electric power) is used.

AC Level 2: Normal charge

NISSAN recommends using normal charging for usual charging of the vehicle. Use of DC Fast Charge should be minimized in order to help prolong Li-ion battery life.

Normal charging uses L1 & L2 EVSE (Electric Vehicle Supply Equipment), or an SAE J1772 compliant charging device connected to a dedicated AC 220 - 240 volt circuit. L1 & L2 EVSE is provided with the vehicle (if so equipped). The charging device is a home charging dock installed in your home by a qualified electrician. It is recommended that you visit a NISSAN certified LEAF dealer. For additional information, see "How to normal charge (AC 220–240 volt) by charging device" (P.47) or "How to normal charge (AC 220–240 volt) by L1 & L2 EVSE (if so equipped)" (P.57).

AC Level 1: Trickle charge

Trickle charging is not recommended for regular use because it takes more time than normal charging. Trickle charge can be used when it is necessary to perform an emergency charge at a destination such as a friend's house.

Trickle charge uses the EVSE (Electric Vehicle Supply Equipment) provided with the vehicle to connect the vehicle to an AC 110–120 volt, 15A dedicated outlet. The outlet should be protected by a circuit breaker to avoid overloading the circuit or other electrical hazard.

For additional information, see "How to trickle charge (AC 110–120 volt) by L1 & L2 EVSE (if so equipped)" (P.49).

Charging system information (2)

Charging system information (Summary of ownwer'a manual)

Type of charging	Charge port	Charge connector	Control box	Power	Instructions
DC Level 3: Quick Charge ONLY Not compatible with NACS Level 1/2 charging.	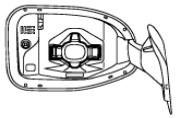	 Quick charge connector			Public charging stations

NORMAL-WBTA0028X

DC Level 3: DC Fast Charge

A vehicle equipped with a DC Fast Charge port is compatible with the NACS (J3400) connectors on charging stations. Charging stations are UL certified and safe to use in the US.

Quick charging is possible (even several times a day). If the battery temperature is hot, in order to protect the battery, power of the quick charging will be limited.

Public charging:

This vehicle is compatible with any public charging station that is SAE J3400 compliant. If you attempt to charge from a noncompliant charging station, you may not receive a complete charge, or you may not be able to charge at all due to hardware and software differences. NISSAN is working with states, municipalities, utility companies and others to assist in the preparation of markets and infrastructure. However, NISSAN makes no representations that public charging stations will be available in locations where you wish to operate the vehicle, nor can NISSAN predict the period of time it may take for public charging infrastructure to be developed in your area. Depending on where you live or drive, there may not be sufficient public charging stations available to meet your particular needs for driving range and charging away from your home. Trip planning is therefore important, and you should plan trips with these facts in mind.

Even when charging the Li-ion battery using a charger capable of more than the vehicle's maximum charging power, the maximum power from the charger will be limited to the vehicle's maximum charging power, it will be changed based on the vehicle status.

During charging the power limit to the vehicle may change depending on the capacity of the Li-ion battery. This is normal and does not indicate a malfunction.

The time needed to charge the Li-ion battery using the DC Fast Charger depends on many factors including the Li-ion battery temperature and the type of DC Fast Charger used.

It may take more time to charge the Li-ion battery using the DC Fast Charger if the vehicle is parked in a cold location for a long time.

It may take more time to charge the Li-ion battery using the DC Fast Charger if the temperature of the Li-ion battery is high or low.

Charging system information (3)

Charging system information (Summary of ownwer'a manual)

<Equipments for Normal charge/ Trickle charge>

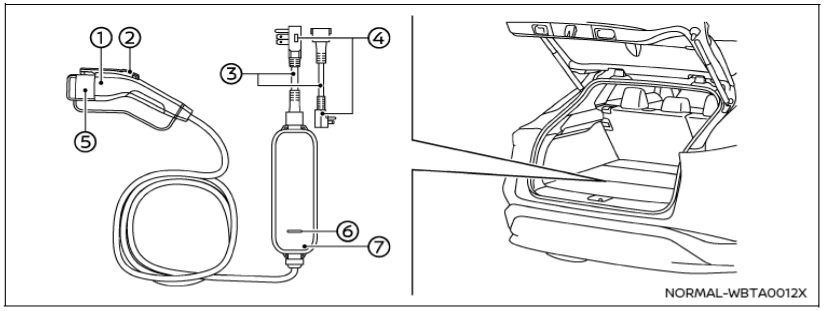

To start normal charging

① Charge Connector
② Release Button
③ Genuine NISSAN exchangeable plug
④ Plug
⑤ Cap
⑥ Indicator light
⑦ Control box

NOTE:
Charge schedule, remote charge and immediate charge can be performed in the normal charge mode. For additional information, see "Charging methods" (P.73).

1. Push the P (Park) position switch to place the vehicle in the P (Park) position and apply the parking brake.
2. When charging the Li-ion battery, place the power switch in the OFF position.
3. Open the Normal Charge Port (J1772) lid and cap on the driver side of vehicle. For additional information, see "Charge port lid" (P.295).
4. Take out the EVSE from the luggage compartment.
   When your vehicle is equipped with the exchangeable plug, connect the exchangeable plug for AC 240 volt to the control box.

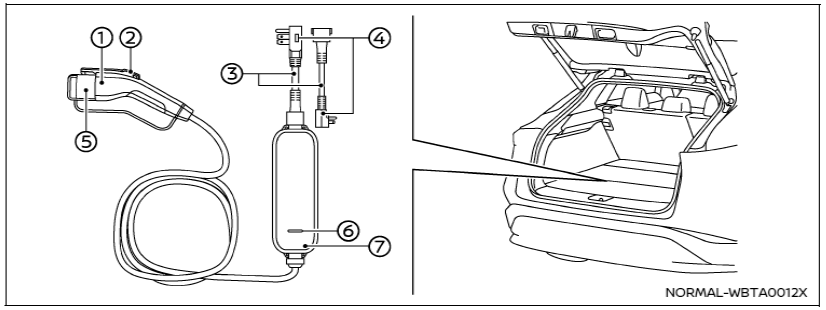

To start trickle charging:

① Charge Connector
② Release Button
③ Genuine NISSAN exchangeable plug
④ Plug
⑤ Cap
⑥ Indicator light
⑦ Control box

NOTE:
Charge schedule, remote charge and immediate charge can be performed in the trickle charge mode. For additional information, see "Charging methods" (P.73).

1. Push the P (Park) position switch to place the vehicle in the P (Park) position and apply the parking brake.
2. When charging the Li-ion battery, place the power switch in the OFF position.
3. Open the Normal Charge Port (J1772) lid and cap on the driver side of vehicle. For additional information, see "Charge port lid" (P.295).
4. Take out the EVSE from the luggage compartment.
   When your vehicle is equipped with the exchangeable plug, connect the exchangeable plug for AC 120 volt to the control box.

Charging system information (4)

Charging system information (Summary of ownwer'a manual)

CHARGING METHODS

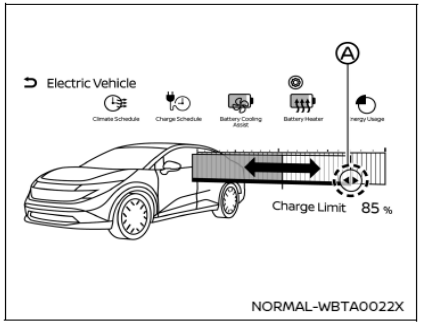

Example

CHARGE LIMIT

The charge limit stops the vehicle from charging when it reaches the desired value. This limit affects AC and DC charging.

See "Electric Vehicle screen" (P.37) to display this screen.

Touch the point Ⓐ and drag it to the desired charge limit (40% to 100%).

The charge limit can also be set by the vehicle information display. See "EV Settings" (P.183).

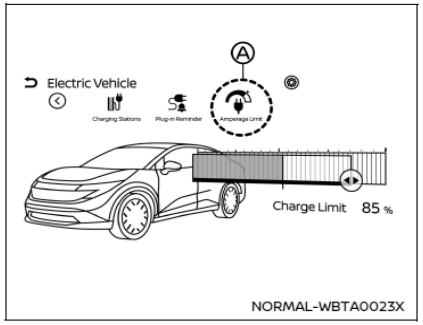

Example

AMPERAGE LIMIT

This function is used to limit the normal charging amperage, to prevent a charging outage when using a home outlet or unfamiliar normal charger.

See "Electric Vehicle screen" (P.37) to display this screen.

Touch the "Amperage Limit" key Ⓐ.

Select desired amperage (8, 12, 16, 24 or Max).

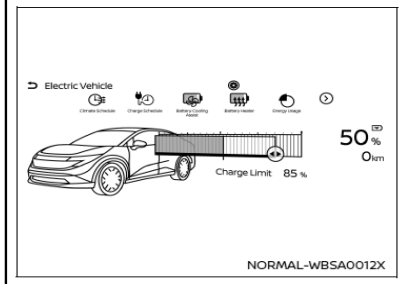

Example

The Electric Vehicle screen allows you to use the following features:

Available items may vary depending on models, specifications, software versions and conditions.

- State of charge gauge, driving range, charge remaining time (while-charging)
- Charge Limit (%)
- Climate Schedule
- Charge Schedule
- Battery Cooling Assist
- Battery Heater
- Energy Usage
- Battery Temperature Management Status
- Charging Stations
- Plug-in Reminder
- Amperage Limit

12. Description of Vehicles Covered by Certificate and Test Parameters

(4) Test Parameter

Durability Group VNSXEEVNN630
Test Group VNSXV0000E6A

Carline	Trim Line	Trans.	ETW (lbs)	Tire Size	Tire Type	Axle Ratio	N/V Ratio	TRLHP	Coastdown Time (sec.)	Single Roll Dyno Terms A	B	C	Shift Schedule ID City	Hwy	Test Proc	Cooling Fan Config	Special Test Proc	Sales Area 50S	CAN
LEAF 75kWh (18 inch alloy wheels)	SV+	Auto (Fixed single Speed)	4500	215/55R18	All season	9.328	119.6	12.2	22.82	30.60	0.3925	0.01650	FTA	HWA	Part1066	*1	*2 *3 *4 *5 *6 *7*8	X	X
LEAF 75kWh (18 inch steel wheels)	S+	Auto (Fixed single Speed)	4500	215/55R18	All season	9.328	119.6	11.6	24.03	26.28	0.3984	0.01628	FTA	HWA	Part1066	*1	*2 *3 *4 *5 *6 *7*8	X	X
LEAF 75kWh (19 inch wheels)	PLATINUM+	Auto (Fixed single Speed)	4750	235/45R19	All season	9.328	117.8	13.5	21.75	38.98	0.4005	0.01691	FTA	HWA	Part1066	*1	*2 *3 *4 *5 *6 *7*8	X	X

*1: The road speed fan to all test cycles.

*2: Set in maintenance mode. Refer to Type B of SEC16(10)-2.

*3: After setting maintenance mode, turn off VDC in the System section of VDC Setting.

*4: After setting maintenance mode, turn off Emergency Braking in the Emergency Assist section of Driver Assistance.

*5: After setting maintenance mode, turn off Speed Limit Sign in the Traffic Sign Assist section of Driver Assistance.

*6: After setting maintenance mode, turn off Speed Limit Warning in the Traffic Sign Assist section of Driver Assistance.

*7: After setting maintenance mode, turn off Rear Auto Braking in the Parking Assist section of Driver Assistance.

*8: Cancel the automatic P position function by Nissan development tool.

12. Description of Vehicles Covered by Certificate and Test Parameter

(4) Test Parameter

Testing Related Information

-Charging procedure

1) Confirm the vehicle is shut off by checking the meter screen is turned off.
2) Push open the charge port door on the vehicle.
3) Remove the charge connector from the holster.
4) Fully insert the charge connector into the charge port. When the charge connector is set correctly, the vehicle answers one beep.
5) If charging begins automatically, the indicator display lamp will be flashing.
6) When the vehicle is target charged, the indicator display lamp will stops blinking and turns off after 5-minutes.
7) Remove the charge coupler from the charge port. Make sure to firmly secure the charge coupler in its holster.
8) Close the charge port door on the vehicle.

-Load setting for dyno procedure

1) With no depressing the brake pedal, push the “START” switch twice. The vehicle is set in “Ready” condition, not "IGN-ON"condition.
2) Shift into “N” position with depressing the brake.
3) Start the Load Set
4) When the load set is finished, push the "START" switch once to shut off vehicle system

-Safe handling of battery system Information

When working on high voltage cable, wear antistatic boots and insulated gloves. And remove the Shut Down switch.

If high voltage battery is damaged, there is a risk of short circuit to vehicle body due to leakage of electrolyte, and it is necessary to beware of electric shock.

When damaged, the battery may emit white fumes (vaporized electrolyte) due to short circuit.

> If this happens, cool the battery with hose streams.

> Since electrolyte is flammable, fire sources are prohibited.

> Electrolyte liquid and vapor are not toxic, but must not be directly inhaled in large quantities.

12. Description of Vehicles Covered by Certificate and Test Parameter

(4) Test Parameter

Testing Related Information

-System Warning Device Information

This EV has 3 indicating devices for warnings specific to EV.

"FAIL" as warning device for the existence of a vehicle malfunction, and the impossibility of vehicle running.

"CAUTION" as warning device for the existence of a vehicle malfunction and the possibility of vehicle running.

"FAIL" and "CAUTION" are same indicator behavior. The difference is run or not.

"SLOW DOWN" which is marked with the figure of TURTLE as warning device for the lowering of acceleration performance.

TYPE		FAIL	SLOW DOWN
Symbol			
	Traveling	IMPOSSIBLE	POSSIBLE
	Repair	Required	Not-required
	Acceleration performance	Impossible to run	SLOW DOWN
	User's responsibility	Repair	Charging or Cooling the Vehicle

-Emergency procedures

When an accident happens

> Stop the car to the safe place.

> Turn key off

> Rescue injured persons if there any.

> Please call emergency (911).

14. Request for Certification

Request for Certificate to ARB

Test Group	VNSXV0000E6A
Exhaust emission control system number	1 of 1
Evaporative/Refueling Family	N.A.
Carline	LEAF 75kWh (18 inch steel wheels)
	LEAF 75kWh (18 inch alloy wheels)
	LEAF 75kWh (19 inch wheels)

Nissan Motor Co., Ltd. requests that ARB issue a 2027 model year executive order for the above specified test group and evaporative/refueling family combination more fully described in this application. This combination complies with the following applicable emission standard

Federal	X
California & 177 States	X

This combination complies with all applicable regulations contained within 40 CFR Part86, the application is current as of this date.
The exhaust and evaporative/refueling emission test results support this request for certificate.

Takane Hayashi
Senior Manager
Regulation and Homologation Department

14. Request for Certification

Request for Certificate to EPA

Test Group	VNSXV0000E6A
Exhaust emission control system number	1 of 1
Evaporative/Refueling Family	N.A.
Carline	LEAF 75kWh (18 inch steel wheels)
	LEAF 75kWh (18 inch alloy wheels)
	LEAF 75kWh (19 inch wheels)

Nissan Motor Co., Ltd. requests that EPA issue a 2027 model year certificate of conformity for the above specified test group and evaporative/refueling family combination more fully described in this application. This combination complies with the following applicable emission standard

Federal	X
California & 177 States	X

This combination complies with all applicable regulations contained within 40 CFR Part86, the application is current as of this date.
The exhaust and evaporative/refueling emission test results support this request for certificate.

Takane Hayashi
Senior Manager
Regulation and Homologation Department

15. Other Information

(1) Fee Filing Form

Refer to the attached Fee Filing Form.

US EPA Fee Form

Help and EPA Instructions

* Required Field

General Information

Date: 02/18/2026

Process Code *

Submit New Fee Filing Form

Manufacturer Code *

NSX

Manufacturer Name *

NISSAN MOTOR CO., LTD.

Contact Name *

Farrukh Khan

Contact Email Address *

KhanF@nrd.nissan-usa.com

Contact Phone *

248-488-4649

Calendar Year complete application submitted to EPA *

2026

calendar year in which the complete certification application is received, not the model year.

Engine Family / Evaporative Family / Test Group *

VNSXV0000E6A

Certificate Request Type (Industry Sector Code)

Certificate Request Type *

- (●) On-Highway LDV, LTD, MDVPV, HDV Chassis Cert (Federal) (A, B, D, J, T, V)
- ( ) On-Highway HDE Dyno Cert (Federal) (E, H)
- ( ) On-Highway LD ICI, MDPV ICI, HDV ICI (A, B, D, J, T, V)
- ( ) On-Highway Motorcycle (C)
- ( ) On-Highway HDV Evap (F)
- ( ) On-Highway LDV, LTD, MDVPV, HDV Chassis Cert (California-Only) (A, B, D, J, T, V)
- ( ) On-Highway HDE Dyno Cert (California-Only) (E, H)
- ( ) Nonroad CI (L)
- ( ) Nonroad SI (B, S)
- ( ) Locomotive (G, K)
- ( ) All Nonroad Recreational, excluding Marine engines (X, Y)
- ( ) All Marine (Including IMO) (M, N, W)
- ( ) Component Certification for Evaporative Emissions (P)

IMO Name (Required for dual US/IMO Marine Only)

ICI VIN Number (Required for ICIs Only)

Do you qualify for a Reduced Fee? *

No

Amount Owed

$32,317.00

Payment Type *

Offline Wire

Comments

EPA Form Number 3520-29
OMB Control No. 2060-0545
Approval expires 7/31/2027

The public reporting and recordkeeping burden for this collection of information is estimated to average 12 minutes per response. Send comments on the Agency's need for this information, the accuracy of the provided burden estimates, and any suggested methods for minimizing respondent burden, including through the use of automated collection techniques to the Director, Collection Strategies Division, U.S. Environmental Protection Agency (2822T), 1200 Pennsylvania Ave., NW, Washington, D.C. 20460. Include the OMB control number in any correspondence. Do not send the completed forms to this address.

The content of this document may contain Sensitive But Unclassified (SBU) data and/or Controlled Unclassified Information (CUI).