APPENDIX

Appendix A: Process Operating Data
Appendix B: Calculations
Appendix C: Raw Field Data and Calibration Data Sheets
Appendix D: Reduced Field Data Sheets
Appendix E: Sampling Log and Chain of Custody Records
Appendix F: Analytical Data Sheets
Appendix G: List of Participants

© Mostardi-Platt Associates, Inc.

Port Washington Power Plant - Unit 4
Mercury ICR
CEM Data
November 17, 1999

Time	U4MEG (MEGAWATT)	S6CPFLOW (SCFH)	S6STEMP (DEGFAHRE)	S6HEAT1 (MMBTU/HR)	S6CPCO2 (PERCENT)	4OSO2#MN (LB/MMBTU)	S6NOX#M1 (LB/MMBTU)
8:00 - 10:20	74.7	15082645	355.1	997.1	11.9	1.674	0.359
11:10 - 13:45	74.3	14854284	361.4	971.0	11.8	1.683	0.347
14:30 - 16:55	73.9	14849477	362.5	969.4	11.8	1.699	0.354
Average	**74.3**	**14928802**	**359.7**	**979.2**	**11.8**	**1.685**	**0.353**

Time	U4PTEMP (DEGFAHRE)	4ICCO2 (PERCENT)	4ISO2#MN (LB/MMBTU)	U4SO2EFF (PERCENT)
8:00 - 10:20	373.9	13.7	2.023	17.55
11:10 - 13:45	387.1	13.6	2.031	17.43
14:30 - 16:55	395.3	13.8	2.050	17.40
Average	**385.4**	**13.7**	**2.034**	**17.46**

Port Washington Power Plant - Unit 4
Mercury ICR
CEM Data
November 17, 1999

Time	U4MEG (MEGAWATT)	S6CPFLOW (SCFH)	S6STEMP (DEGFAHRE)	S6HEAT1 (MMBTU/HR)	S6CPCO2 (PERCENT)	4OSO2#MN (LB/MMBTU)	S6NOX#M1 (LB/MMBTU)	U4PTEMP (DEGFAHRE)	4ICCO2 (PERCENT)	4ISO2#MN (LB/MMBTU)	U4SO2EFF (PERCENT)
0:00	35.2	10149082	335.3	479.3	8.5	1.706	0.253	387.8	11.22	2.048	17.1
1:00	35.6	10137955	326.0	501.3	8.9	1.703	0.258	385.0	11.35	2.041	16.9
2:00	35.5	9373435	319.2	494.7	9.5	1.623	0.227	382.6	11.52	2.019	17.9
3:00	35.6	9254729	316.4	488.4	9.5	1.696	0.237	379.6	11.69	2.018	16.3
4:00	35.8	9241750	314.4	487.8	9.5	1.700	0.238	376.6	11.84	2.041	17.1
5:00	35.8	9312315	314.1	496.7	9.6	1.692	0.236	373.9	11.82	2.038	17.3
6:00	62.3	12157416	323.3	776.7	11.5	1.766	0.312	371.8	13.54	2.091	15.9
7:00	75.0	14932200	348.2	995.5	12	1.704	0.356	370.6	13.99	2.035	16.6
8:00	**74.7**	**14901393**	**353.5**	**985.1**	**11.9**	**1.679**	**0.361**	**372.1**	**13.83**	**2.030**	**17.6**
9:00	**74.6**	**15263897**	**356.7**	**1009.1**	**11.9**	**1.669**	**0.357**	**375.6**	**13.66**	**2.015**	**17.5**
10:00	74.5	14924073	358.8	986.6	11.9	1.657	0.353	379.6	13.59	1.987	16.9
11:00	**74.3**	**14882597**	**360.6**	**975.6**	**11.8**	**1.662**	**0.349**	**383.7**	**13.45**	**1.993**	**17.0**
12:00	**74.3**	**14636454**	**361.6**	**959.5**	**11.8**	**1.691**	**0.346**	**387.3**	**13.63**	**2.049**	**17.8**
13:00	**74.2**	**15043802**	**361.9**	**977.8**	**11.7**	**1.697**	**0.346**	**390.2**	**13.72**	**2.050**	**17.5**
14:00	73.9	14846814	362.3	973.3	11.8	1.698	0.347	392.6	13.72	2.039	17.1
15:00	**73.9**	**14927216**	**362.4**	**978.6**	**11.8**	**1.698**	**0.350**	**394.5**	**13.80**	**2.046**	**17.3**
16:00	**73.8**	**14771737**	**362.6**	**960.2**	**11.7**	**1.700**	**0.357**	**396.0**	**13.88**	**2.053**	**17.5**
17:00	74.6	14957511	362.2	988.9	11.9	1.704	0.347	397.5	13.99	2.055	17.4
18:00	74.0	14725871	362.6	957.2	11.7	1.697	0.356	398.9	13.86	2.037	17.0
19:00	73.9	15141624	362.7	984.2	11.7	1.691	0.357	400.2	13.75	2.027	16.9
20:00	74.9	15116614	362.4	991.0	11.8	1.696	0.350	401.3	13.87	2.035	17.0
21:00	67.6	14037090	361.1	889.0	11.4	1.652	0.360	402.2	13.45	2.000	17.8
22:00	45.9	10027484	343.1	590.5	10.6	1.644	0.267	402.9	12.87	1.994	17.9
23:00	36.1	8702736	328.1	478.7	9.9	1.678	0.216	402.2	12.79	2.026	17.5
Average	61.1	12977741	346.6	808.6	11	1.688	0.314	387.7	13.12	2.032	17.2
Maximum	75.0	15263897	362.7	1009.1	12	1.766	0.361	402.9	13.99	2.091	17.9
Minimum	35.2	8702736	314.1	478.7	8.5	1.623	0.216	370.6	11.22	1.987	15.9

Hours in **BOLD** represent data used in calculating average during test run.

Port Washington Power Plant - Unit 4
Mercury ICR
Operational Data
November 17, 1999

Test Run #	Time	Load	Steam flow	Total Feedwater Flow	Coal Flow	Heater 5A Outlet Temp	Heater 5 B Outlet Temp	Air Htr 42 Gas In Temp	Air Htr 41 Gas In Temp	Air Htr 42 Gas Out Temp	Air Htr 41 Gas Out Temp	Boiler Oxygen	% DSI Feed	Stack 6 Opacity
		MW gross	klb/hr	klb/hr	T/hr as fired	F	F	F	F	F	F	%		%
1	8:00 - 10:20	74.6	533.6	594.0	33.6	439.4	438.3	751.3	746.7	428.8	437.5	5.1	36.3	2.4
2	11:10 - 13:45	74.3	530.1	590.4	34.1	439.3	438.2	751.9	745.9	432.3	439.6	5.1	35.4	2.5
3	14:30 - 16:55	73.8	527.7	594.4	33.4	438.6	437.5	751.7	747.7	432.9	440.7	5.2	34.0	2.5
	Average	**74.2**	**530.5**	**593.0**	**33.7**	**439.1**	**438.0**	**751.6**	**746.8**	**431.3**	**439.3**	**5.1**	**35.2**	**2.5**

1 [GEN LOAD]
3 [STEAM FLOW]
4 [TOTAL FEEDWATER FLOW]
5 [HEATER 5A OUTLET TEMP]
6 [HEATER 5B OUTLET TEMP]
7 [AIR HTR 42 GAS IN TEMP]
8 [AIR HTR 41 GAS IN TEMP]
9 [AIR HTR 42 GAS OUTLET TEMP]
10 [AIR HTR 41 GAS OUTLET TEMP
11 [% DSI FDR SPEED (0-100%)]

DATE	TIME	1	3	4	5	6	7	8	9	10	11
11/17/99	8:00:39	75.0	535.5	594.7	439.6	438.4	750.6	747.2	427.8	436.2	35.0
11/17/99	8:01:38	74.7	534.9	594.4	439.7	438.5	750.6	747.2	427.8	436.2	35.0
11/17/99	8:02:37	74.7	535.5	594.1	439.6	438.4	750.8	747.1	427.8	436.3	35.0
11/17/99	8:03:37	74.9	534.4	594.0	439.7	438.4	750.9	747.2	427.9	436.3	35.0
11/17/99	8:04:36	74.9	534.6	593.2	439.5	438.3	750.8	747.1	427.8	436.3	35.0
11/17/99	8:05:37	74.9	535.2	595.0	439.6	438.4	750.8	747.1	427.8	436.2	35.0
11/17/99	8:06:37	75.1	535.1	597.0	439.6	438.5	751.1	747.0	427.8	436.2	35.0
11/17/99	8:07:39	74.9	535.8	596.2	439.6	438.3	751.0	747.1	427.8	436.1	35.0
11/17/99	8:08:39	74.8	534.8	593.4	439.6	438.5	750.9	747.0	427.7	436.1	35.0
11/17/99	8:09:40	74.8	535.4	596.2	439.6	438.5	750.7	747.1	427.8	436.1	35.0
11/17/99	8:10:41	75.0	535.3	595.1	439.5	438.3	750.7	747.1	427.8	436.2	37.0
11/17/99	8:11:41	74.7	535.0	596.8	439.5	438.3	750.7	746.9	427.9	436.2	37.0
11/17/99	8:12:41	74.7	533.6	595.3	439.4	438.3	750.8	746.9	428.0	436.3	37.0
11/17/99	8:13:44	74.5	535.6	594.4	439.5	438.5	751.1	746.8	428.0	436.2	38.0
11/17/99	8:14:44	74.7	536.0	595.2	439.4	438.3	751.1	746.8	427.9	436.1	37.0
11/17/99	8:15:44	74.6	534.1	597.3	439.2	438.1	751.1	746.9	427.9	436.1	37.0
11/17/99	8:16:44	74.8	533.8	593.9	439.4	438.2	751.1	746.6	427.8	436.2	36.0
11/17/99	8:17:45	74.7	534.2	593.2	439.6	438.3	751.0	746.8	427.8	436.2	37.0
11/17/99	8:18:46	74.5	534.6	592.6	439.5	438.2	751.2	746.8	428.0	436.2	36.0
11/17/99	8:19:46	74.6	534.3	594.6	439.5	438.2	751.1	746.8	428.0	436.2	36.0
11/17/99	8:20:46	74.7	533.8	594.1	439.5	438.3	751.2	746.5	428.0	436.3	36.0
11/17/99	8:21:47	74.7	534.6	593.8	439.4	438.3	751.1	746.7	428.0	436.2	36.0
11/17/99	8:22:47	74.9	534.3	595.0	439.4	438.2	751.0	746.6	428.0	436.4	37.0
11/17/99	8:23:49	74.8	534.0	593.6	439.5	438.1	751.1	746.5	428.1	436.4	36.0
11/17/99	8:24:49	74.7	534.5	594.0	439.3	438.2	751.0	746.5	428.1	436.4	36.0
11/17/99	8:25:48	74.9	534.3	594.6	439.4	438.3	751.0	746.5	428.1	436.4	36.0
11/17/99	8:26:48	74.7	534.4	592.7	439.5	438.2	751.3	746.6	428.0	436.3	37.0
11/17/99	8:27:48	74.5	533.6	593.5	439.5	438.3	751.2	746.5	428.1	436.3	37.0
11/17/99	8:28:49	74.8	534.3	593.2	439.4	438.3	751.0	746.4	428.1	436.3	36.0
11/17/99	8:29:49	74.7	533.8	594.5	439.4	438.2	751.0	746.3	428.1	436.2	36.0
11/17/99	8:30:50	74.7	534.5	596.3	439.5	438.2	751.2	746.2	428.1	436.2	36.0
11/17/99	8:31:50	74.7	533.6	594.7	439.5	438.4	751.1	746.2	428.1	436.3	37.0
11/17/99	8:32:51	74.7	534.6	593.8	439.5	438.3	751.1	746.2	428.2	436.4	36.0
11/17/99	8:33:51	74.7	534.0	595.5	439.2	438.2	751.3	746.4	428.1	436.4	36.0
11/17/99	8:34:52	74.8	534.5	594.2	439.3	438.3	751.2	746.5	428.1	436.4	36.0
11/17/99	8:35:52	74.9	533.9	595.2	439.2	438.2	751.2	746.3	428.1	436.3	36.0
11/17/99	8:36:54	74.4	534.0	594.8	439.3	438.1	751.3	746.4	428.1	436.4	36.0
11/17/99	8:37:54	74.6	533.6	593.3	439.2	438.1	751.3	746.4	428.2	436.4	37.0
11/17/99	8:38:54	74.6	534.2	595.3	439.3	438.1	751.2	746.4	428.1	436.4	36.0
11/17/99	8:39:57	74.9	533.7	593.6	439.3	438.3	751.4	746.4	428.2	436.5	36.0
11/17/99	8:40:55	74.7	534.5	593.7	439.4	438.2	751.3	746.4	428.3	436.5	37.0
11/17/99	8:41:57	74.7	535.0	592.5	439.6	438.3	751.2	746.4	428.3	436.4	36.0
11/17/99	8:42:57	74.5	534.0	593.0	439.5	438.3	751.3	746.4	428.3	436.4	36.0
11/17/99	8:43:58	74.6	534.3	592.0	439.6	438.3	751.2	746.5	428.3	436.4	36.0
11/17/99	8:44:59	74.6	532.8	593.1	439.3	438.3	751.1	746.5	428.3	436.4	36.0
11/17/99	8:46:00	74.5	533.3	593.8	439.3	438.1	751.1	746.5	428.3	436.4	36.0
11/17/99	8:46:59	74.8	534.2	594.6	439.3	438.2	750.9	746.5	428.4	436.5	36.0
11/17/99	8:48:00	74.6	534.9	593.8	439.6	438.3	751.1	746.5	428.4	436.6	36.0
11/17/99	8:49:03	74.9	534.3	594.4	439.3	438.2	751.1	746.6	428.2	436.7	37.0
11/17/99	8:50:01	74.7	533.1	592.2	439.5	438.4	751.3	746.5	428.4	436.6	36.0
11/17/99	8:51:02	74.8	533.7	592.7	439.5	438.4	751.4	746.5	428.3	436.7	37.0
11/17/99	8:52:04	74.7	533.8	592.8	439.6	438.1	751.3	746.5	428.4	436.6	36.0
11/17/99	8:53:03	74.5	533.7	593.7	439.2	438.4	751.2	746.5	428.5	436.6	36.0
11/17/99	8:54:04	74.8	532.9	595.6	439.3	438.1	751.2	746.5	428.6	436.7	36.0
11/17/99	8:55:04	74.7	533.6	595.2	439.5	438.1	751.3	746.5	428.6	436.7	36.0
11/17/99	8:56:03	74.7	534.3	594.1	439.5	438.3	751.4	746.5	428.6	436.8	37.0
11/17/99	8:57:04	74.6	533.7	590.8	439.5	438.3	751.4	746.4	428.5	436.8	36.0
11/17/99	8:58:06	74.7	533.7	593.1	439.3	438.3	751.3	746.4	428.5	436.9	36.0
11/17/99	8:59:04	74.7	533.5	594.0	439.5	438.3	751.2	746.4	428.6	436.9	36.0
11/17/99	9:00:04	74.6	533.4	593.3	439.5	438.4	751.2	746.3	428.7	437.0	36.0
11/17/99	9:01:07	74.7	533.4	595.7	439.3	438.1	751.2	746.2	428.8	437.0	36.0
11/17/99	9:02:06	74.9	533.6	593.9	439.3	438.4	751.3	745.7	428.8	437.0	36.0
11/17/99	9:03:07	74.7	533.7	595.2	439.5	438.3	751.1	745.9	428.8	437.1	37.0

1 [GEN LOAD]
3 [STEAM FLOW]
4 [TOTAL FEEDWATER FLOW]
5 [HEATER 5A OUTLET TEMP]
6 [HEATER 5B OUTLET TEMP]
7 [AIR HTR 42 GAS IN TEMP]
8 [AIR HTR 41 GAS IN TEMP]
9 [AIR HTR 42 GAS OUTLET TEMP]
10 [AIR HTR 41 GAS OUTLET TEMP
11 [% DSI FDR SPEED (0-100%)]

DATE	TIME	1	3	4	5	6	7	8	9	10	11
11/17/99	9:04:07	74.7	533.4	595.7	439.3	438.1	751.2	746.2	428.8	437.2	36.0
11/17/99	9:05:07	74.8	533.9	595.5	439.3	438.1	751.3	746.5	428.9	437.2	37.0
11/17/99	9:06:08	74.7	533.4	593.9	439.3	438.3	751.4	746.5	428.9	437.2	36.0
11/17/99	9:07:10	74.7	533.5	596.7	439.3	438.1	751.3	746.5	428.6	437.3	37.0
11/17/99	9:08:09	74.8	533.7	595.0	439.5	438.4	751.4	746.6	428.8	437.3	36.0
11/17/99	9:09:11	74.5	533.8	593.1	439.5	438.4	751.4	746.8	428.8	437.3	37.0
11/17/99	9:10:11	74.9	533.9	591.5	439.5	438.4	751.3	746.8	428.7	437.3	36.0
11/17/99	9:11:11	74.8	533.4	594.3	439.7	438.3	751.3	746.8	428.8	437.3	36.0
11/17/99	9:12:11	74.7	533.4	594.1	439.6	438.3	751.4	746.8	428.8	437.4	37.0
11/17/99	9:13:12	74.7	533.9	593.0	439.6	438.3	751.6	746.8	428.7	437.4	36.0
11/17/99	9:14:14	74.7	533.9	593.1	439.7	438.4	751.6	746.8	428.9	437.3	36.0
11/17/99	9:15:13	74.6	534.0	594.9	439.5	438.4	751.6	746.9	428.9	437.3	36.0
11/17/99	9:16:14	74.6	534.0	594.5	439.5	438.4	751.6	747.0	429.1	437.5	37.0
11/17/99	9:17:13	74.6	534.0	593.6	439.5	438.4	751.6	746.8	429.1	437.7	36.0
11/17/99	9:18:14	74.7	533.7	594.4	439.7	438.4	751.6	747.0	429.1	437.6	37.0
11/17/99	9:19:15	74.6	533.7	592.2	439.5	438.4	751.6	746.9	429.1	437.6	36.0
11/17/99	9:20:15	74.6	533.8	593.9	439.5	438.6	751.6	747.0	429.0	437.7	36.0
11/17/99	9:21:15	74.7	533.9	594.0	439.4	438.6	751.3	747.0	429.1	437.7	36.0
11/17/99	9:22:15	74.5	533.9	595.2	439.4	438.2	751.3	746.9	429.1	437.8	36.0
11/17/99	9:23:15	74.5	534.0	593.5	439.5	438.2	751.4	746.6	429.1	437.9	37.0
11/17/99	9:24:15	74.6	533.4	595.3	439.4	438.2	751.3	746.5	429.2	438.0	37.0
11/17/99	9:25:16	74.6	533.7	595.6	439.3	438.3	751.4	746.5	429.1	438.1	36.0
11/17/99	9:26:16	74.6	534.1	591.8	439.3	438.1	751.4	746.5	429.2	438.1	37.0
11/17/99	9:27:18	74.9	533.8	593.4	439.4	438.3	751.3	746.5	429.1	438.2	37.0
11/17/99	9:28:19	74.5	534.0	591.1	439.5	438.4	751.4	746.5	429.3	438.2	36.0
11/17/99	9:29:19	74.5	533.5	593.5	439.4	438.3	751.3	746.5	429.3	438.2	36.0
11/17/99	9:30:21	74.7	533.2	593.2	439.4	438.4	751.2	746.5	429.2	438.2	37.0
11/17/99	9:31:21	74.6	533.4	594.4	439.6	438.3	751.4	746.6	429.3	438.2	36.0
11/17/99	9:32:21	74.6	533.6	593.8	439.3	438.4	751.3	746.5	429.2	438.1	37.0
11/17/99	9:33:20	74.5	533.2	594.1	439.4	438.3	751.1	746.5	429.3	438.2	36.0
11/17/99	9:34:22	74.2	533.9	594.1	439.5	438.2	751.3	746.5	429.3	438.2	37.0
11/17/99	9:35:22	74.4	533.0	594.3	439.4	438.3	751.4	746.5	429.3	438.3	36.0
11/17/99	9:36:22	74.6	533.3	594.8	439.3	438.2	751.4	746.6	429.3	438.3	37.0
11/17/99	9:37:22	74.9	532.2	595.6	439.3	438.2	751.4	746.8	429.3	438.3	36.0
11/17/99	9:38:25	74.4	532.5	593.7	439.4	438.2	751.3	746.8	429.2	438.4	36.0
11/17/99	9:39:24	74.6	534.2	593.7	439.6	438.4	751.4	746.9	429.3	438.4	37.0
11/17/99	9:40:24	74.6	533.9	594.4	439.4	438.2	751.4	746.9	429.3	438.4	36.0
11/17/99	9:41:25	74.6	534.1	594.1	439.3	438.3	751.2	747.1	429.2	438.6	37.0
11/17/99	9:42:24	74.5	533.7	594.7	439.5	438.4	751.3	746.9	429.3	438.7	36.0
11/17/99	9:43:25	74.5	533.5	592.7	439.7	438.6	751.4	746.9	429.3	438.6	36.0
11/17/99	9:44:25	74.5	533.4	593.4	439.5	438.3	751.4	747.1	429.4	438.7	37.0
11/17/99	9:45:24	74.6	533.6	595.1	439.5	438.3	751.3	746.9	429.3	438.7	36.0
11/17/99	9:46:26	74.5	532.5	594.9	439.5	438.3	751.3	746.8	429.3	438.7	36.0
11/17/99	9:47:26	74.6	533.4	594.1	439.4	438.3	751.3	746.9	429.3	438.7	37.0
11/17/99	9:48:27	74.3	533.0	594.1	439.4	438.2	751.4	746.9	429.3	438.8	37.0
11/17/99	9:49:27	74.8	533.2	594.4	439.4	438.3	751.3	746.8	429.4	438.9	36.0
11/17/99	9:50:29	74.4	532.4	592.6	439.5	438.3	751.4	746.8	429.4	438.8	37.0
11/17/99	9:51:29	74.4	532.8	593.5	439.5	438.2	751.3	746.7	429.4	438.8	37.0
11/17/99	9:52:30	74.2	532.6	593.7	439.5	438.2	751.5	746.8	429.4	438.8	37.0
11/17/99	9:53:31	74.6	532.9	593.2	439.5	438.3	751.4	746.8	429.5	438.8	36.0
11/17/99	9:54:31	74.4	531.9	593.4	439.4	438.3	751.3	746.9	429.5	438.7	37.0
11/17/99	9:55:33	74.4	533.1	594.0	439.4	438.3	751.2	746.9	429.5	438.7	36.0
11/17/99	9:56:33	74.4	532.3	593.7	439.4	438.2	751.2	746.9	429.5	438.7	36.0
11/17/99	9:57:33	74.4	532.5	594.5	439.4	438.3	751.3	747.0	429.5	438.7	37.0
11/17/99	9:58:34	74.7	532.9	595.2	439.5	438.3	751.2	746.9	429.5	438.7	37.0
11/17/99	9:59:35	74.6	533.0	595.3	439.3	438.3	751.4	746.9	429.5	438.7	36.0
11/17/99	10:00:36	74.7	532.7	593.1	439.4	438.3	751.4	747.0	429.5	438.7	36.0
11/17/99	10:01:36	74.3	533.0	591.1	439.6	438.4	751.4	747.1	429.5	438.8	37.0
11/17/99	10:02:37	74.4	532.3	593.3	439.4	438.3	751.6	747.1	429.4	438.7	36.0
11/17/99	10:03:36	74.4	532.4	595.2	439.3	438.3	751.7	747.0	429.4	438.7	37.0
11/17/99	10:04:37	74.6	532.6	594.8	439.4	438.3	751.6	747.0	429.4	438.7	36.0
11/17/99	10:05:38	74.5	532.7	594.5	439.4	438.3	751.7	746.9	429.4	438.7	37.0
11/17/99	10:06:37	74.7	532.5	594.4	439.4	438.3	751.7	746.9	429.4	438.6	37.0

1 [GEN LOAD]
3 [STEAM FLOW]
4 [TOTAL FEEDWATER FLOW]
5 [HEATER 5A OUTLET TEMP]
6 [HEATER 5B OUTLET TEMP]
7 [AIR HTR 42 GAS IN TEMP]
8 [AIR HTR 41 GAS IN TEMP]
9 [AIR HTR 42 GAS OUTLET TEMP]
10 [AIR HTR 41 GAS OUTLET TEMP
11 [% DSI FDR SPEED (0-100%)]

DATE	TIME	1	3	4	5	6	7	8	9	10	11
11/17/99	10:07:38	74.4	532.5	593.3	439.5	438.2	751.6	746.9	429.5	438.7	36.0
11/17/99	10:08:39	74.6	532.8	594.6	439.3	438.3	751.6	746.9	429.5	438.8	36.0
11/17/99	10:09:39	74.4	532.6	597.1	439.4	438.2	751.7	746.9	429.5	438.7	36.0
11/17/99	10:10:39	74.7	532.3	591.9	439.5	438.3	751.7	747.0	429.6	438.9	36.0
11/17/99	10:11:39	74.4	532.8	593.6	439.5	438.3	751.7	747.1	429.7	438.9	36.0
11/17/99	10:12:39	74.5	531.9	591.8	439.3	438.4	751.7	747.0	429.7	438.9	37.0
11/17/99	10:13:42	74.7	532.0	593.7	439.5	438.3	751.7	746.9	429.6	438.9	36.0
11/17/99	10:14:42	74.3	532.4	592.4	439.3	438.3	751.7	747.1	429.7	438.9	36.0
11/17/99	10:15:42	74.4	532.2	593.3	439.4	438.2	751.9	747.1	429.6	439.0	37.0
11/17/99	10:16:43	74.5	532.0	594.2	439.4	438.3	752.1	747.0	429.5	439.0	37.0
11/17/99	10:17:44	74.5	532.7	591.8	439.4	438.3	752.0	746.9	429.2	439.0	36.0
11/17/99	10:18:44	74.5	532.0	590.6	439.6	438.3	751.9	747.0	429.2	438.9	36.0
11/17/99	10:19:45	74.4	532.5	593.1	439.5	438.2	751.6	747.1	429.2	439.0	37.0
11/17/99	10:20:46	74.5	531.9	595.6	439.4	438.2	751.6	747.1	429.2	439.0	36.0
		74.6	**533.6**	**594.0**	**439.4**	**438.3**	**751.3**	**746.7**	**428.8**	**437.5**	**36.3**
11/17/99	11:10:09	74.3	531.2	590.7	439.6	438.5	752.2	747.4	430.8	439.6	37.0
11/17/99	11:11:11	74.2	530.8	593.4	439.6	438.4	752.1	747.4	430.8	439.6	37.0
11/17/99	11:12:09	74.2	531.9	593.3	439.6	438.4	752.1	747.5	430.7	439.5	36.0
11/17/99	11:13:10	74.5	531.9	595.4	439.4	438.3	752.1	747.5	430.8	439.6	37.0
11/17/99	11:14:12	74.2	530.4	593.9	439.2	438.4	752.1	747.8	430.9	439.6	36.0
11/17/99	11:15:11	74.2	530.7	593.6	439.4	438.3	752.2	747.7	430.9	439.6	37.0
11/17/99	11:16:13	74.4	530.5	590.4	439.3	438.4	752.2	747.7	430.9	439.6	37.0
11/17/99	11:17:13	74.2	530.9	591.6	439.4	438.5	752.1	747.5	431.0	439.6	37.0
11/17/99	11:18:14	74.3	530.1	591.6	439.5	438.4	752.1	747.5	431.0	439.6	37.0
11/17/99	11:19:13	74.1	530.4	592.3	439.5	438.4	752.2	747.3	431.0	439.6	37.0
11/17/99	11:20:14	74.3	530.1	591.5	439.5	438.3	752.1	747.4	431.0	439.6	37.0
11/17/99	11:21:15	74.3	530.8	591.3	439.4	438.3	752.1	747.5	431.2	439.6	36.0
11/17/99	11:22:15	74.3	531.2	593.6	439.3	438.2	752.2	747.7	431.1	439.6	37.0
11/17/99	11:23:16	74.1	531.2	591.2	439.4	438.3	752.2	747.6	431.2	439.6	37.0
11/17/99	11:24:16	74.5	530.6	592.2	439.4	438.3	752.4	747.4	431.1	439.6	37.0
11/17/99	11:25:16	74.3	530.9	592.6	439.4	438.2	752.4	747.4	431.3	439.6	37.0
11/17/99	11:26:16	74.4	530.0	590.5	439.3	438.3	752.4	747.2	431.3	439.7	36.0
11/17/99	11:27:16	74.3	530.6	591.8	439.2	438.2	752.4	747.2	431.2	439.7	36.0
11/17/99	11:28:16	74.2	530.3	590.5	439.3	438.2	752.5	747.2	431.4	439.7	37.0
11/17/99	11:29:17	74.3	530.4	592.4	439.4	438.2	752.4	747.4	431.4	439.7	37.0
11/17/99	11:30:18	74.5	531.1	592.9	439.3	438.2	752.4	747.2	431.4	439.6	36.0
11/17/99	11:31:19	74.5	531.1	590.2	439.3	438.5	752.4	747.1	431.4	439.6	37.0
11/17/99	11:32:19	74.5	531.2	593.9	439.5	438.5	752.5	747.4	431.4	439.6	36.0
11/17/99	11:33:19	74.5	530.8	590.9	439.4	438.5	752.4	747.3	431.5	439.7	37.0
11/17/99	11:34:20	74.4	531.3	592.5	439.6	438.4	752.4	747.4	431.4	439.6	37.0
11/17/99	11:35:20	74.2	530.4	590.0	439.6	438.4	752.4	747.2	431.5	439.5	37.0
11/17/99	11:36:20	74.2	530.9	591.7	439.5	438.4	752.2	747.2	431.5	439.5	36.0
11/17/99	11:37:21	74.2	530.4	592.8	439.2	438.3	752.2	747.3	431.5	439.6	37.0
11/17/99	11:38:21	74.4	530.6	592.9	439.2	438.1	752.2	747.2	431.5	439.6	37.0
11/17/99	11:39:22	74.3	530.6	593.3	439.4	438.1	752.1	747.4	431.6	439.6	36.0
11/17/99	11:40:22	74.2	530.8	592.1	439.4	438.5	752.1	747.4	431.6	439.7	37.0
11/17/99	11:41:24	74.2	530.4	592.6	439.4	438.2	752.2	747.6	431.6	439.8	36.0
11/17/99	11:42:23	74.2	530.7	589.5	439.1	438.3	752.1	747.6	431.6	439.9	37.0
11/17/99	11:43:23	74.3	530.9	590.6	439.4	438.3	752.2	747.6	431.6	439.9	37.0
11/17/99	11:44:24	74.1	530.3	591.3	439.4	438.3	752.4	747.5	431.6	440.0	37.0
11/17/99	11:45:26	74.2	530.6	591.7	439.4	438.3	752.4	747.5	431.7	440.0	37.0
11/17/99	11:46:25	74.1	531.3	591.1	439.3	438.3	752.4	747.4	431.6	439.9	36.0
11/17/99	11:47:25	74.3	530.8	589.6	439.3	438.3	752.3	747.4	431.7	439.8	36.0
11/17/99	11:48:25	74.3	530.3	592.5	439.6	438.3	752.3	747.2	431.6	439.9	36.0
11/17/99	11:49:27	74.4	530.6	591.9	439.4	438.2	752.2	747.2	431.7	439.9	37.0
11/17/99	11:50:27	74.3	531.1	591.4	439.3	438.3	752.3	747.4	431.7	439.9	36.0
11/17/99	11:51:26	74.3	531.2	590.6	439.4	438.2	752.3	747.2	431.9	439.9	37.0
11/17/99	11:52:26	74.4	531.4	590.3	439.5	438.3	752.3	747.3	431.9	439.9	37.0
11/17/99	11:53:28	74.3	531.2	589.2	439.6	438.5	752.5	747.1	432.0	439.9	37.0
11/17/99	11:54:29	74.4	531.7	590.1	439.3	438.3	752.5	746.8	432.0	439.9	37.0
11/17/99	11:55:29	74.4	530.3	589.1	439.5	438.4	752.5	747.1	432.0	440.0	37.0
11/17/99	11:56:30	74.4	530.6	588.5	439.2	438.3	752.4	747.1	432.0	439.9	37.0
11/17/99	11:57:29	74.3	530.6	591.7	439.4	438.4	752.4	746.9	432.0	439.9	36.0

1 [GEN LOAD]
3 [STEAM FLOW]
4 [TOTAL FEEDWATER FLOW]
5 [HEATER 5A OUTLET TEMP]
6 [HEATER 5B OUTLET TEMP]
7 [AIR HTR 42 GAS IN TEMP]
8 [AIR HTR 41 GAS IN TEMP]
9 [AIR HTR 42 GAS OUTLET TEMP]
10 [AIR HTR 41 GAS OUTLET TEMP
11 [% DSI FDR SPEED (0-100%)]

DATE	TIME	1	3	4	5	6	7	8	9	10	11
11/17/99	11:58:31	74.6	531.0	589.8	439.3	438.3	752.4	747.2	432.1	439.8	37.0
11/17/99	11:59:30	74.2	530.4	590.9	439.4	438.3	752.3	746.9	432.0	439.9	36.0
11/17/99	12:00:32	74.2	530.9	590.9	439.4	438.4	752.4	746.9	432.0	439.9	36.0
11/17/99	12:01:32	73.9	531.1	590.5	439.4	438.3	752.3	746.9	432.0	439.9	37.0
11/17/99	12:02:33	74.3	530.4	588.9	439.4	438.3	752.4	746.9	432.0	439.9	37.0
11/17/99	12:03:31	74.3	530.1	590.8	439.3	438.3	752.4	746.9	432.1	439.8	36.0
11/17/99	12:04:32	74.2	529.9	594.1	439.3	438.3	752.4	746.8	432.1	439.7	37.0
11/17/99	12:05:33	74.0	530.5	593.0	439.3	438.1	752.4	746.8	432.0	439.7	36.0
11/17/99	12:06:33	74.2	530.7	591.8	439.3	438.2	752.4	746.7	432.1	439.9	37.0
11/17/99	12:07:33	74.0	530.3	592.0	439.3	438.2	752.3	746.8	432.0	440.0	37.0
11/17/99	12:08:33	74.2	530.0	593.4	439.3	438.2	752.3	747.0	432.0	439.9	36.0
11/17/99	12:09:33	74.1	530.5	591.4	439.2	438.2	752.5	746.9	432.0	439.8	36.0
11/17/99	12:10:33	74.5	529.9	588.8	439.3	438.3	752.4	747.0	432.1	439.8	37.0
11/17/99	12:11:34	74.4	530.4	589.5	439.3	438.3	752.5	746.8	432.2	439.7	37.0
11/17/99	12:12:34	74.3	530.7	589.4	439.4	438.3	752.4	746.9	432.1	439.7	36.0
11/17/99	12:13:35	74.4	530.5	588.7	439.4	438.3	752.5	746.9	432.2	439.6	37.0
11/17/99	12:14:36	74.2	530.7	590.7	439.3	438.2	752.4	746.9	432.2	439.5	36.0
11/17/99	12:15:36	74.2	530.0	589.4	439.4	438.2	752.2	747.0	432.1	439.5	37.0
11/17/99	12:16:38	74.2	529.6	591.2	439.3	438.2	752.2	746.7	432.2	439.5	37.0
11/17/99	12:17:39	74.3	530.5	589.9	439.2	438.2	752.2	746.4	432.2	439.5	37.0
11/17/99	12:18:38	74.3	529.5	590.7	439.2	438.3	752.2	746.7	432.1	439.4	36.0
11/17/99	12:19:40	74.3	529.6	589.8	439.3	438.2	752.2	746.6	432.2	439.4	37.0
11/17/99	12:20:39	74.4	530.2	587.9	439.4	438.3	752.2	746.9	432.3	439.4	36.0
11/17/99	12:21:41	74.4	530.3	589.7	439.4	438.4	752.4	746.9	432.3	439.5	36.0
11/17/99	12:22:40	74.4	530.3	589.8	439.5	438.3	752.4	747.1	432.3	439.6	36.0
11/17/99	12:23:41	74.2	531.1	591.2	439.4	438.4	752.2	746.7	432.4	439.6	36.0
11/17/99	12:24:40	74.4	530.2	590.8	439.5	438.2	752.2	746.0	432.3	439.6	37.0
11/17/99	12:25:43	74.2	530.6	592.6	439.4	438.3	752.2	745.6	432.4	439.6	37.0
11/17/99	12:26:42	74.5	530.7	590.8	439.2	438.3	752.2	745.6	432.5	439.5	36.0
11/17/99	12:27:43	74.3	530.1	588.6	439.5	438.3	752.2	745.3	432.5	439.5	36.0
11/17/99	12:28:43	74.3	530.5	590.0	439.5	438.3	752.2	745.0	432.6	439.5	36.0
11/17/99	12:29:43	74.1	530.2	591.8	439.4	438.3	752.2	744.9	432.7	439.5	37.0
11/17/99	12:30:43	74.2	530.4	591.5	439.1	438.2	752.0	744.9	432.6	439.5	36.0
11/17/99	12:31:43	74.3	529.8	590.0	439.4	438.1	751.9	744.9	432.6	439.5	37.0
11/17/99	12:32:43	74.2	530.0	589.7	439.4	438.2	751.8	744.9	432.7	439.4	36.0
11/17/99	12:33:44	74.4	529.4	589.0	439.3	438.2	751.8	744.9	432.7	439.8	37.0
11/17/99	12:34:44	74.3	530.8	590.6	439.3	438.3	752.1	744.7	432.7	440.0	34.0
11/17/99	12:35:45	74.3	531.1	589.4	439.5	438.3	752.2	745.0	432.9	440.3	34.0
11/17/99	12:36:46	74.1	530.0	589.2	439.3	438.3	752.0	744.9	432.8	440.3	34.0
11/17/99	12:37:47	74.2	530.0	589.6	439.5	438.2	752.0	744.9	432.8	440.4	33.0
11/17/99	12:38:47	74.5	529.7	588.6	439.3	438.3	751.8	744.9	432.9	440.4	35.0
11/17/99	12:39:47	74.3	529.5	591.2	439.4	438.3	751.9	744.8	432.9	440.4	35.0
11/17/99	12:40:49	74.2	530.1	591.4	439.3	438.1	752.0	744.7	432.8	440.5	35.0
11/17/99	12:41:49	74.2	529.7	593.6	439.2	438.2	751.8	744.7	432.9	440.6	35.0
11/17/99	12:42:49	74.2	529.4	593.1	439.2	438.1	751.8	744.7	432.9	440.4	35.0
11/17/99	12:43:50	74.1	530.6	592.6	439.2	438.2	751.8	744.8	433.0	440.1	35.0
11/17/99	12:44:51	74.1	530.1	593.2	439.3	438.2	751.7	744.7	433.0	439.9	35.0
11/17/99	12:45:52	74.1	530.4	590.6	439.1	438.1	751.7	744.8	433.0	439.8	33.0
11/17/99	12:46:52	74.1	529.7	590.4	439.2	438.3	751.6	744.7	433.0	439.7	33.0
11/17/99	12:47:53	74.1	529.8	590.0	439.2	438.1	751.5	744.6	433.1	439.6	32.0
11/17/99	12:48:53	74.6	530.0	588.5	439.3	438.2	751.5	744.5	433.0	439.6	32.0
11/17/99	12:49:54	73.9	529.1	587.6	439.4	438.2	751.5	744.5	433.0	439.6	34.0
11/17/99	12:50:54	74.3	530.3	588.9	439.3	438.2	751.6	744.4	433.0	439.6	34.0
11/17/99	12:51:56	74.5	530.5	586.3	439.4	438.4	751.6	744.4	433.0	439.5	34.0
11/17/99	12:52:55	74.2	530.0	588.2	439.6	438.4	751.7	744.4	433.0	439.5	34.0
11/17/99	12:53:56	74.3	529.9	586.9	439.4	438.3	751.7	744.7	433.0	439.6	34.0
11/17/99	12:54:55	74.3	530.1	590.4	439.4	438.4	751.7	744.5	433.1	439.6	34.0
11/17/99	12:55:56	74.5	530.0	589.8	439.4	438.3	751.6	744.7	433.1	439.6	34.0
11/17/99	12:56:55	74.4	529.9	591.1	439.5	438.2	751.6	744.8	433.0	439.6	34.0
11/17/99	12:57:55	74.5	529.9	590.9	439.3	438.4	751.6	744.8	433.0	439.5	34.0
11/17/99	12:58:57	74.3	530.8	591.6	439.3	438.2	751.7	744.7	433.0	439.4	34.0
11/17/99	12:59:56	74.4	529.8	590.3	439.4	438.2	751.7	744.8	433.0	439.4	34.0
11/17/99	13:00:57	74.4	529.8	592.0	439.4	438.1	751.6	744.8	433.0	439.4	34.0

1 [GEN LOAD]
3 [STEAM FLOW]
4 [TOTAL FEEDWATER FLOW]
5 [HEATER 5A OUTLET TEMP]
6 [HEATER 5B OUTLET TEMP]
7 [AIR HTR 42 GAS IN TEMP]
8 [AIR HTR 41 GAS IN TEMP]
9 [AIR HTR 42 GAS OUTLET TEMP]
10 [AIR HTR 41 GAS OUTLET TEMP
11 [% DSI FDR SPEED (0-100%)]

DATE	TIME	1	3	4	5	6	7	8	9	10	11
11/17/99	13:01:57	74.1	529.6	590.2	439.2	438.1	751.6	744.7	433.0	439.2	34.0
11/17/99	13:02:59	74.4	530.3	590.1	439.4	438.2	751.7	744.7	432.9	439.2	34.0
11/17/99	13:03:58	74.1	529.8	589.1	439.5	438.2	751.8	744.7	432.8	439.2	34.0
11/17/99	13:04:59	74.3	530.0	590.6	439.4	438.2	751.5	744.5	432.9	439.2	34.0
11/17/99	13:06:01	74.1	530.0	588.6	439.3	438.1	751.6	744.7	432.9	439.3	34.0
11/17/99	13:07:01	74.5	529.0	590.5	439.3	438.2	751.5	744.5	432.9	439.3	34.0
11/17/99	13:08:01	74.3	529.6	588.9	439.3	438.2	751.5	744.7	432.8	439.3	34.0
11/17/99	13:09:02	74.2	529.3	590.1	439.3	438.2	751.5	744.8	432.9	439.1	34.0
11/17/99	13:10:03	74.2	528.7	589.8	439.3	438.2	751.5	744.7	432.8	439.2	34.0
11/17/99	13:11:04	74.2	529.1	589.1	439.3	438.1	751.6	744.8	432.8	439.2	34.0
11/17/99	13:12:03	74.3	529.5	588.6	439.4	438.2	751.4	744.6	432.8	439.2	34.0
11/17/99	13:13:04	74.4	529.4	589.8	439.5	438.3	751.6	744.8	432.8	439.1	34.0
11/17/99	13:14:07	74.3	529.8	589.1	439.3	438.1	751.5	744.6	432.8	439.1	34.0
11/17/99	13:15:07	74.3	529.8	590.6	439.4	438.2	751.5	744.5	432.8	439.1	34.0
11/17/99	13:16:07	74.6	529.8	588.2	439.3	438.2	751.5	744.6	432.8	439.0	34.0
11/17/99	13:17:09	74.1	529.1	590.3	439.4	438.2	751.3	744.8	432.8	439.0	34.0
11/17/99	13:18:09	74.3	529.4	589.4	439.4	438.2	751.5	744.9	432.8	438.9	34.0
11/17/99	13:19:10	74.4	529.3	589.5	439.5	438.3	751.3	744.6	432.9	438.9	34.0
11/17/99	13:20:10	74.2	529.2	589.7	439.5	438.2	751.2	744.6	432.8	438.9	34.0
11/17/99	13:21:11	74.3	529.8	590.7	439.5	438.0	751.2	744.4	432.8	438.9	34.0
11/17/99	13:22:10	74.3	529.3	590.6	439.5	438.1	751.3	744.5	432.7	438.8	34.0
11/17/99	13:23:09	74.2	529.7	590.8	439.2	438.1	751.5	744.4	432.8	438.9	34.0
11/17/99	13:24:10	74.2	529.3	588.5	439.3	438.2	751.4	744.5	432.8	438.9	34.0
11/17/99	13:25:11	74.1	529.3	589.8	439.3	438.1	751.2	744.8	432.8	439.1	34.0
11/17/99	13:26:11	74.2	529.0	588.5	439.5	438.1	751.4	745.1	432.8	439.1	34.0
11/17/99	13:27:12	74.1	529.5	588.7	439.3	438.1	751.4	745.0	432.9	439.3	34.0
11/17/99	13:28:13	74.3	529.7	589.9	439.2	438.2	751.3	744.8	432.8	439.6	34.0
11/17/99	13:29:13	74.2	529.4	587.3	439.2	438.1	751.3	745.0	432.8	439.8	34.0
11/17/99	13:30:14	74.0	528.4	588.8	439.3	438.0	751.4	744.6	432.9	439.8	34.0
11/17/99	13:31:15	74.2	528.3	587.3	439.3	438.0	751.3	745.0	433.0	439.8	34.0
11/17/99	13:32:15	74.2	529.2	588.9	439.3	438.1	751.4	744.6	433.0	439.6	34.0
11/17/99	13:33:17	74.0	529.0	591.1	439.0	437.9	751.1	744.6	433.0	439.4	34.0
11/17/99	13:34:15	74.3	528.3	588.1	439.2	437.9	751.2	744.8	432.9	439.3	34.0
11/17/99	13:35:17	74.2	528.3	591.1	439.2	437.9	751.2	744.9	432.9	439.5	34.0
11/17/99	13:36:18	74.2	528.9	588.8	439.1	438.0	751.2	745.0	432.9	439.5	34.0
11/17/99	13:37:18	74.2	529.1	589.6	439.3	438.0	751.1	744.9	432.9	439.5	34.0
11/17/99	13:38:19	74.2	528.9	588.4	439.3	438.0	751.0	745.0	432.9	439.5	34.0
11/17/99	13:39:19	74.2	528.6	587.7	439.3	437.9	751.1	745.0	433.0	439.3	34.0
11/17/99	13:40:20	74.3	528.5	588.3	439.0	437.9	751.1	745.2	433.1	439.3	34.0
11/17/99	13:41:20	74.0	529.3	588.4	439.3	437.9	751.1	745.0	433.0	439.3	34.0
11/17/99	13:42:20	74.3	528.7	586.4	439.2	438.0	751.2	745.0	433.1	439.3	34.0
11/17/99	13:43:22	74.3	528.3	588.7	439.1	438.1	751.1	745.0	432.9	439.3	34.0
11/17/99	13:44:22	74.1	528.5	588.5	439.2	437.9	751.1	745.2	432.9	439.3	34.0
11/17/99	13:45:22	74.2	528.4	587.7	439.4	438.0	751.2	745.1	433.0	439.3	34.0
		74.3	**530.1**	**590.4**	**439.3**	**438.2**	**751.9**	**745.9**	**432.3**	**439.6**	**35.4**
11/17/99	14:30:45	73.7	529.2	593.0	438.8	437.7	751.8	746.2	432.9	440.2	34.0
11/17/99	14:31:44	74.1	527.7	593.3	438.8	437.5	751.7	746.2	432.9	440.3	34.0
11/17/99	14:32:44	73.9	527.4	591.5	438.6	437.7	751.5	746.5	432.9	440.3	34.0
11/17/99	14:33:43	73.6	528.2	593.7	438.5	437.5	751.5	746.5	432.9	440.3	34.0
11/17/99	14:34:44	73.9	528.1	596.1	438.6	437.5	751.5	746.8	433.0	440.5	34.0
11/17/99	14:35:44	73.8	527.7	595.8	438.6	437.7	751.6	746.9	433.0	440.5	34.0
11/17/99	14:36:44	73.7	527.2	595.6	438.8	437.4	751.7	747.0	432.9	440.6	34.0
11/17/99	14:37:45	73.8	528.4	594.6	438.7	437.6	751.7	747.2	432.9	440.7	34.0
11/17/99	14:38:46	74.1	528.6	594.9	438.9	437.7	751.8	747.4	433.0	440.4	34.0
11/17/99	14:39:46	73.9	528.4	592.9	438.8	437.8	751.7	747.6	433.0	440.3	34.0
11/17/99	14:40:48	73.9	528.2	595.6	439.1	437.8	751.7	747.7	433.0	440.5	34.0
11/17/99	14:41:48	73.7	528.7	593.7	438.9	437.7	751.8	747.9	432.9	440.5	34.0
11/17/99	14:42:48	74.1	528.3	595.7	438.8	437.8	751.8	747.9	433.0	440.6	34.0
11/17/99	14:43:50	74.0	527.9	595.3	438.9	437.7	751.7	748.1	433.1	440.5	34.0
11/17/99	14:44:50	73.9	528.1	594.1	438.6	437.5	751.7	748.2	433.1	440.5	34.0
11/17/99	14:45:51	73.8	528.6	594.7	438.9	437.7	751.7	748.5	433.1	440.5	34.0
11/17/99	14:46:51	74.0	528.2	591.2	438.9	437.8	751.6	748.2	433.1	440.5	34.0
11/17/99	14:47:51	74.0	527.8	594.1	438.9	437.8	751.5	748.1	433.1	440.8	34.0

1 [GEN LOAD]
3 [STEAM FLOW]
4 [TOTAL FEEDWATER FLOW]
5 [HEATER 5A OUTLET TEMP]
6 [HEATER 5B OUTLET TEMP]
7 [AIR HTR 42 GAS IN TEMP]
8 [AIR HTR 41 GAS IN TEMP]
9 [AIR HTR 42 GAS OUTLET TEMP]
10 [AIR HTR 41 GAS OUTLET TEMP
11 [% DSI FDR SPEED (0-100%)]

DATE	TIME	1	3	4	5	6	7	8	9	10	11
11/17/99	14:48:52	74.2	527.8	592.9	438.9	437.8	751.5	748.0	433.2	441.0	34.0
11/17/99	14:49:52	73.8	528.5	594.0	438.9	437.6	751.4	748.1	433.2	441.1	34.0
11/17/99	14:50:54	73.8	528.3	594.6	438.7	437.6	751.5	748.2	433.3	441.2	34.0
11/17/99	14:51:54	73.9	528.1	593.7	438.7	437.6	751.7	748.2	433.3	441.2	34.0
11/17/99	14:52:53	73.8	527.7	594.9	438.6	437.6	751.5	748.2	433.3	441.1	34.0
11/17/99	14:53:54	73.7	527.8	595.5	438.9	437.7	751.6	747.9	433.3	440.8	34.0
11/17/99	14:54:54	73.7	527.9	593.8	438.8	437.7	751.6	748.2	433.2	440.7	34.0
11/17/99	14:55:55	74.1	528.0	594.5	438.8	437.7	751.7	748.2	433.2	440.5	34.0
11/17/99	14:56:55	74.0	527.8	594.5	438.8	437.6	751.6	748.2	433.2	440.4	34.0
11/17/99	14:57:55	73.8	527.4	594.8	438.6	437.5	751.5	748.2	433.4	440.7	34.0
11/17/99	14:58:55	73.5	528.3	594.6	438.8	437.5	751.4	748.0	433.4	440.7	34.0
11/17/99	14:59:56	73.8	527.7	592.6	438.6	437.5	751.4	748.0	433.3	440.5	34.0
11/17/99	15:00:56	73.8	527.3	595.7	438.6	437.5	751.5	748.0	433.2	440.6	34.0
11/17/99	15:01:57	73.8	527.5	593.1	438.6	437.5	751.4	748.0	433.2	440.8	34.0
11/17/99	15:02:56	73.8	527.6	593.6	438.9	437.7	751.5	748.0	433.2	440.9	34.0
11/17/99	15:04:00	74.1	527.8	591.7	438.8	437.5	751.5	747.8	433.2	441.0	34.0
11/17/99	15:04:59	73.6	528.3	592.6	438.8	437.5	751.3	747.8	433.2	440.8	34.0
11/17/99	15:05:59	73.9	527.7	592.4	438.8	437.6	751.3	747.4	433.2	440.9	34.0
11/17/99	15:07:00	73.7	528.7	593.2	438.8	437.5	751.6	747.1	433.1	440.9	34.0
11/17/99	15:08:02	73.9	528.3	592.6	438.8	437.5	751.6	747.1	433.1	441.0	34.0
11/17/99	15:09:02	73.7	528.1	594.3	438.7	437.6	751.7	747.0	433.2	441.0	34.0
11/17/99	15:10:01	73.8	528.3	594.4	438.8	437.5	751.6	746.9	433.1	441.0	34.0
11/17/99	15:11:02	74.0	527.5	594.6	438.7	437.4	751.6	746.7	433.2	440.7	34.0
11/17/99	15:12:03	73.8	526.9	594.8	438.7	437.5	751.6	746.8	433.2	440.5	34.0
11/17/99	15:13:03	73.8	528.4	596.4	438.8	437.3	751.6	746.7	433.2	440.2	34.0
11/17/99	15:14:03	73.7	527.8	596.2	438.7	437.4	751.8	746.6	433.1	440.3	34.0
11/17/99	15:15:03	73.7	528.1	593.6	438.7	437.4	751.8	746.6	433.0	440.3	34.0
11/17/99	15:16:05	73.8	528.0	594.4	438.8	437.5	751.7	746.6	433.1	440.1	34.0
11/17/99	15:17:04	74.0	528.1	595.5	438.7	437.4	751.6	746.5	433.1	440.0	34.0
11/17/99	15:18:04	73.9	528.0	592.6	438.6	437.5	751.8	746.6	433.0	440.0	34.0
11/17/99	15:19:05	74.0	527.8	593.9	438.7	437.5	751.7	746.6	433.0	439.9	34.0
11/17/99	15:20:04	73.6	527.0	594.9	438.7	437.5	751.6	746.6	433.0	439.9	34.0
11/17/99	15:21:04	73.8	527.6	595.8	438.6	437.4	751.6	746.5	433.0	440.1	34.0
11/17/99	15:22:05	73.7	526.9	592.9	438.7	437.4	751.6	746.6	433.1	440.4	34.0
11/17/99	15:23:05	73.9	527.7	594.0	438.7	437.4	751.6	746.6	433.0	440.4	34.0
11/17/99	15:24:06	73.8	527.8	593.9	438.7	437.4	751.5	746.7	433.0	440.3	34.0
11/17/99	15:25:06	73.8	528.4	594.8	438.7	437.4	751.6	746.6	433.0	440.0	34.0
11/17/99	15:26:08	73.8	528.0	595.6	438.8	437.5	751.6	746.7	433.0	439.9	34.0
11/17/99	15:27:08	73.9	528.1	594.0	438.7	437.4	751.6	746.6	433.0	439.8	34.0
11/17/99	15:28:09	73.9	528.2	594.8	438.6	437.4	751.8	746.8	433.0	439.7	34.0
11/17/99	15:29:10	73.8	528.6	594.2	438.8	437.5	751.9	746.9	432.9	439.7	34.0
11/17/99	15:30:10	73.9	528.2	594.3	438.7	437.4	751.9	746.9	432.9	439.6	34.0
11/17/99	15:31:11	73.8	527.8	593.5	438.7	437.3	751.7	746.9	432.9	440.0	34.0
11/17/99	15:32:11	74.0	528.0	593.9	438.7	437.6	751.6	746.6	432.9	440.2	34.0
11/17/99	15:33:11	74.0	528.1	592.5	438.7	437.6	751.6	746.4	432.9	440.4	34.0
11/17/99	15:34:12	73.7	527.5	593.1	438.7	437.4	751.6	746.5	432.9	440.5	34.0
11/17/99	15:35:12	73.6	527.4	594.5	438.7	437.4	751.5	746.5	433.0	440.5	34.0
11/17/99	15:36:13	73.8	527.7	595.1	438.9	437.4	751.6	746.6	432.9	440.2	34.0
11/17/99	15:37:14	73.9	528.4	594.5	438.9	437.4	751.7	746.7	432.8	440.2	34.0
11/17/99	15:38:15	73.9	527.8	594.7	438.7	437.4	751.6	746.8	432.5	440.1	34.0
11/17/99	15:39:14	73.7	527.8	593.5	438.6	437.4	751.6	746.8	432.3	440.0	34.0
11/17/99	15:40:15	73.9	527.8	593.9	438.7	437.3	751.3	746.8	432.2	440.0	34.0
11/17/99	15:41:15	73.9	527.7	594.4	438.6	437.4	751.4	746.8	432.2	440.2	34.0
11/17/99	15:42:17	73.8	528.5	592.8	438.7	437.6	751.5	747.0	432.1	440.5	34.0
11/17/99	15:43:15	73.9	529.0	595.3	438.9	437.6	751.5	746.9	432.1	440.5	34.0
11/17/99	15:44:15	73.7	527.9	593.0	438.7	437.4	751.5	747.2	432.2	440.7	34.0
11/17/99	15:45:16	74.0	528.7	594.5	438.6	437.3	751.5	747.0	432.3	440.7	34.0
11/17/99	15:46:16	73.8	528.0	596.1	438.7	437.4	751.4	747.1	432.4	440.8	34.0
11/17/99	15:47:16	73.7	527.8	594.7	438.6	437.2	751.3	747.2	432.4	440.8	34.0
11/17/99	15:48:18	73.9	528.2	595.1	438.4	437.3	751.2	747.6	432.4	440.8	34.0
11/17/99	15:49:18	74.1	528.7	592.4	438.5	437.4	751.1	747.9	432.5	441.0	34.0
11/17/99	15:50:18	73.8	527.4	590.2	438.7	437.6	751.1	748.0	432.7	441.1	34.0
11/17/99	15:51:19	74.0	528.2	591.0	438.6	437.6	751.3	748.2	432.7	441.1	34.0

1 [GEN LOAD]
3 [STEAM FLOW]
4 [TOTAL FEEDWATER FLOW]
5 [HEATER 5A OUTLET TEMP]
6 [HEATER 5B OUTLET TEMP]
7 [AIR HTR 42 GAS IN TEMP]
8 [AIR HTR 41 GAS IN TEMP]
9 [AIR HTR 42 GAS OUTLET TEMP]
10 [AIR HTR 41 GAS OUTLET TEMP
11 [% DSI FDR SPEED (0-100%)]

DATE	TIME	1	3	4	5	6	7	8	9	10	11
11/17/99	15:52:20	73.8	528.3	593.3	438.7	437.5	751.3	748.3	432.7	441.1	34.0
11/17/99	15:53:21	73.8	528.1	592.9	438.6	437.4	751.2	748.5	432.8	441.2	34.0
11/17/99	15:54:20	73.9	527.4	594.5	438.4	437.4	751.3	748.5	432.8	441.0	34.0
11/17/99	15:55:21	73.8	527.1	597.6	438.6	437.2	751.2	748.8	432.8	440.8	34.0
11/17/99	15:56:21	73.8	527.2	596.8	438.5	437.3	751.3	748.8	432.8	441.0	34.0
11/17/99	15:57:23	73.7	527.7	597.6	438.5	437.3	751.5	748.8	432.9	441.2	34.0
11/17/99	15:58:22	73.9	527.0	595.7	438.4	437.3	751.5	748.9	432.9	441.0	34.0
11/17/99	15:59:24	73.7	527.5	596.0	438.4	437.3	751.5	748.8	432.9	440.9	34.0
11/17/99	16:00:24	73.8	526.6	596.7	438.5	437.3	751.3	748.8	432.9	441.0	34.0
11/17/99	16:01:23	73.6	527.5	596.4	438.4	437.2	751.3	748.8	432.9	441.0	34.0
11/17/99	16:02:24	73.7	528.1	597.0	438.4	437.1	751.6	748.9	432.9	440.9	34.0
11/17/99	16:03:25	73.7	527.4	595.7	438.4	437.3	751.7	749.0	432.9	440.8	34.0
11/17/99	16:04:28	73.8	527.0	596.7	438.4	437.3	751.7	749.0	432.9	441.1	34.0
11/17/99	16:05:28	73.6	527.8	595.7	438.6	437.3	751.6	749.0	432.8	441.2	34.0
11/17/99	16:06:28	73.6	526.8	595.0	438.4	437.3	751.5	749.0	432.9	441.4	34.0
11/17/99	16:07:30	73.5	527.3	594.1	438.5	437.4	751.5	749.0	433.0	441.5	34.0
11/17/99	16:08:28	73.8	527.4	595.9	438.5	437.4	751.7	749.1	433.0	441.5	34.0
11/17/99	16:09:28	73.7	526.3	595.9	438.5	437.3	751.7	749.2	433.0	441.5	34.0
11/17/99	16:10:28	73.6	527.8	594.5	438.7	437.6	751.7	749.3	433.0	441.5	34.0
11/17/99	16:11:29	74.0	527.7	596.3	438.6	437.6	751.8	749.3	433.0	441.4	34.0
11/17/99	16:12:30	73.7	527.3	595.8	438.5	437.4	751.9	749.3	433.0	441.1	34.0
11/17/99	16:13:30	73.7	527.7	595.3	438.6	437.4	751.8	749.3	433.0	441.2	34.0
11/17/99	16:14:31	73.9	527.3	593.9	438.7	437.4	751.9	749.3	433.0	441.2	34.0
11/17/99	16:15:32	73.8	526.9	595.1	438.5	437.3	752.0	749.3	432.9	441.0	34.0
11/17/99	16:16:33	73.8	526.6	596.2	438.6	437.4	752.0	749.3	432.9	440.8	34.0
11/17/99	16:17:33	73.9	527.7	594.1	438.6	437.5	752.1	749.0	432.9	440.7	34.0
11/17/99	16:18:34	73.9	527.1	592.5	438.6	437.6	752.0	749.1	432.9	441.0	34.0
11/17/99	16:19:34	73.8	527.5	595.1	438.6	437.4	751.9	748.7	432.8	441.2	34.0
11/17/99	16:20:35	74.1	527.5	593.7	438.6	437.5	751.8	748.5	432.9	441.3	34.0
11/17/99	16:21:35	73.7	527.5	594.9	438.6	437.5	752.0	748.2	432.8	441.2	34.0
11/17/99	16:22:34	73.8	528.2	592.8	438.7	437.6	752.1	748.1	432.9	441.3	34.0
11/17/99	16:23:35	73.9	528.1	592.3	438.9	437.6	752.3	747.9	432.9	441.3	34.0
11/17/99	16:24:35	73.7	527.4	592.9	438.7	437.4	752.4	747.8	432.9	441.2	34.0
11/17/99	16:25:36	73.9	527.8	595.5	438.6	437.5	752.3	747.6	433.0	441.1	34.0
11/17/99	16:26:37	73.8	527.1	595.9	438.5	437.4	752.1	747.6	432.9	440.9	34.0
11/17/99	16:27:37	73.9	527.4	592.9	438.4	437.4	752.1	747.6	433.0	441.0	34.0
11/17/99	16:28:38	73.4	526.9	593.5	438.4	437.5	752.0	747.6	432.9	441.2	34.0
11/17/99	16:29:38	73.5	528.1	594.8	438.6	437.4	752.1	747.5	432.9	441.1	34.0
11/17/99	16:30:38	73.6	527.7	594.0	438.6	437.5	752.1	747.6	432.9	440.8	34.0
11/17/99	16:31:38	73.5	527.3	594.7	438.6	437.4	752.1	747.7	432.8	440.7	34.0
11/17/99	16:32:37	73.8	527.3	594.6	438.6	437.5	752.1	747.6	432.9	440.6	34.0
11/17/99	16:33:39	73.9	527.3	594.5	438.7	437.5	752.2	747.6	432.9	440.6	34.0
11/17/99	16:34:39	73.8	527.5	595.5	438.6	437.5	752.2	747.7	432.9	440.5	34.0
11/17/99	16:35:39	73.7	527.0	593.7	438.5	437.5	752.3	747.6	432.9	440.5	34.0
11/17/99	16:36:40	73.4	527.1	594.8	438.5	437.3	752.1	747.6	432.8	440.8	34.0
11/17/99	16:37:41	73.7	526.9	594.2	438.5	437.5	752.2	747.6	432.9	440.8	34.0
11/17/99	16:38:41	73.9	527.5	594.2	438.6	437.5	752.2	747.7	432.8	440.8	34.0
11/17/99	16:39:41	73.4	527.8	592.8	438.7	437.5	752.2	747.7	432.8	440.9	34.0
11/17/99	16:40:43	73.9	527.2	595.6	438.6	437.5	752.2	747.7	432.6	441.0	34.0
11/17/99	16:41:43	73.8	528.0	594.2	438.4	437.4	752.1	747.5	432.5	441.1	34.0
11/17/99	16:42:44	73.7	527.4	594.5	438.4	437.4	752.1	747.7	432.5	441.1	34.0
11/17/99	16:43:44	74.0	527.8	595.1	438.6	437.5	752.1	747.6	432.4	441.1	34.0
11/17/99	16:44:46	73.5	527.5	594.6	438.6	437.4	751.9	747.6	432.4	441.3	34.0
11/17/99	16:45:45	73.7	527.1	594.2	438.5	437.3	751.9	747.5	432.4	441.1	34.0
11/17/99	16:46:46	73.7	528.5	594.9	438.6	437.5	751.9	747.5	432.5	441.0	34.0
11/17/99	16:47:47	73.9	527.0	594.5	438.6	437.5	752.0	747.6	432.5	441.0	34.0
11/17/99	16:48:48	74.1	527.5	593.1	438.6	437.3	751.9	747.6	432.5	441.1	34.0
11/17/99	16:49:48	73.8	526.6	594.4	438.6	437.5	751.9	747.6	432.5	441.0	34.0
11/17/99	16:50:48	73.7	526.8	595.3	438.6	437.5	751.9	747.7	432.4	441.1	34.0
11/17/99	16:51:48	73.7	527.3	594.4	438.5	437.5	751.8	747.9	432.4	441.1	34.0
11/17/99	16:52:50	73.8	527.3	597.5	438.7	437.5	751.8	747.9	432.4	441.2	32.0
11/17/99	16:53:50	73.7	526.5	593.7	438.3	437.3	751.9	747.9	432.5	441.2	33.0
11/17/99	16:54:50	73.7	528.0	595.3	438.4	437.5	751.9	747.8	432.5	441.3	33.0

1 [GEN LOAD]
3 [STEAM FLOW]
4 [TOTAL FEEDWATER FLOW]
5 [HEATER 5A OUTLET TEMP]
6 [HEATER 5B OUTLET TEMP]
7 [AIR HTR 42 GAS IN TEMP]
8 [AIR HTR 41 GAS IN TEMP]
9 [AIR HTR 42 GAS OUTLET TEMP]
10 [AIR HTR 41 GAS OUTLET TEMP
11 [% DSI FDR SPEED (0-100%)]

DATE	TIME	1	3	4	5	6	7	8	9	10	11
11/17/99	16:55:50	73.7	527.5	593.7	438.5	437.3	751.9	748.0	432.5	441.2	33.0
		73.8	**527.7**	**594.4**	**438.6**	**437.5**	**751.7**	**747.7**	**432.9**	**440.7**	**34.0**

1 [BOILER OXYGEN AVG]
2 [COAL FLOW IN TONS PER HOUR]
4 [STACK 6 OPACITY]

DATE	TIME	1	2	4
11/17/99	8:00:42	4.9353	34.8239	2.46094
11/17/99	8:01:42	5.03711	34.8239	2.4668
11/17/99	8:02:43	5.46175	34.8239	2.57227
11/17/99	8:03:42	4.97477	34.8239	3.10742
11/17/99	8:04:42	5.00594	35.1904	2.67969
11/17/99	8:05:43	4.91382	34.814	2.4668
11/17/99	8:06:43	4.99813	34.814	2.42969
11/17/99	8:07:44	4.97144	34.814	2.68359
11/17/99	8:08:45	4.90397	34.814	2.57812
11/17/99	8:09:45	5.03011	34.814	2.71094
11/17/99	8:10:46	5.00366	34.814	2.48828
11/17/99	8:11:46	5.08675	34.814	2.70508
11/17/99	8:12:46	4.99984	34.814	2.76367
11/17/99	8:13:47	5.04207	34.814	2.70508
11/17/99	8:14:47	5.32048	34.814	3.19727
11/17/99	8:15:48	5.02759	34.814	3.19727
11/17/99	8:16:48	5.06038	34.814	2.94922
11/17/99	8:17:48	5.02214	34.814	3.17578
11/17/99	8:18:49	5.10913	34.814	2.94922
11/17/99	8:19:50	5.00024	34.814	2.875
11/17/99	8:20:51	5.06063	34.814	2.33984
11/17/99	8:21:51	5.07829	34.814	2.84375
11/17/99	8:22:53	5.09416	34.814	2.38281
11/17/99	8:23:52	5.10734	34.814	2.25977
11/17/99	8:24:53	5.06071	34.814	2.32422
11/17/99	8:25:53	4.98787	34.4297	2.58984
11/17/99	8:26:54	5.42236	34.4297	2.44531
11/17/99	8:27:54	5.15145	34.4297	2.56836
11/17/99	8:28:54	5.08838	34.4297	2.82227
11/17/99	8:29:56	5.05493	34.4297	2.32422
11/17/99	8:30:56	5.0848	34.4297	2.57227
11/17/99	8:31:56	5.26685	34.4297	2.48242
11/17/99	8:32:56	5.04305	34.4297	2.50391
11/17/99	8:33:57	5.16081	34.4297	2.4668
11/17/99	8:34:57	5.12044	34.4297	2.45117
11/17/99	8:35:58	5.60156	34.4297	2.33984
11/17/99	8:36:59	5.12223	34.4297	2.51562
11/17/99	8:37:58	5.35897	34.4297	2.4668
11/17/99	8:38:59	5.09383	34.4297	2.58398
11/17/99	8:40:00	5.10726	34.4297	2.50391
11/17/99	8:41:00	5.07983	34.4297	2.69922
11/17/99	8:42:01	5.04744	34.4297	2.37695
11/17/99	8:43:00	5.08447	34.4297	2.37695
11/17/99	8:44:01	5.07902	34.4297	2.24023
11/17/99	8:45:01	5.1145	34.4297	2.28711
11/17/99	8:46:03	5.13452	34.797	2.48242
11/17/99	8:47:03	5.0411	34.797	2.32422
11/17/99	8:48:03	5.02531	34.797	2.33398
11/17/99	8:49:04	5.12378	34.797	2.69531
11/17/99	8:50:04	5.03678	34.797	2.21289
11/17/99	8:51:04	5.05355	34.797	2.21289
11/17/99	8:52:06	5.12459	34.797	2.42969
11/17/99	8:53:06	5.13411	34.797	2.45117
11/17/99	8:54:06	5.12549	34.797	2.3457
11/17/99	8:55:07	5.03906	34.797	2.24414
11/17/99	8:56:08	5.2321	34.797	2.58984
11/17/99	8:57:07	5.0415	34.797	2.46094
11/17/99	8:58:08	5.11833	34.797	2.46094
11/17/99	8:59:08	5.10148	34.797	2.44531
11/17/99	9:00:09	5.14372	34.797	2.45703
11/17/99	9:01:10	4.93726	34.797	2.20703
11/17/99	9:02:10	5.06193	34.797	2.46094
11/17/99	9:03:10	5.01725	34.797	2.45703

1 [BOILER OXYGEN AVG]
2 [COAL FLOW IN TONS PER HOUR]
4 [STACK 6 OPACITY]

DATE	TIME	1	2	4
11/17/99	9:04:10	5.05314	34.797	2.20703
11/17/99	9:05:11	4.96826	34.797	2.45703
11/17/99	9:06:12	5.11947	34.797	2.21875
11/17/99	9:07:13	5.05054	34.797	2.33398
11/17/99	9:08:14	5.08073	34.797	2.45703
11/17/99	9:09:13	5.08862	34.797	2.20703
11/17/99	9:10:14	5.06462	34.797	2.57812
11/17/99	9:11:15	4.99845	34.797	2.46094
11/17/99	9:12:16	5.04004	34.797	2.82617
11/17/99	9:13:16	5.06657	34.797	2.60938
11/17/99	9:14:17	5.13534	34.797	2.30859
11/17/99	9:15:17	5.07495	34.797	2.46094
11/17/99	9:16:18	5.0673	34.797	2.33008
11/17/99	9:17:18	5.08252	34.797	2.33398
11/17/99	9:18:20	5.02922	34.797	2.69922
11/17/99	9:19:19	5.38314	34.797	2.57812
11/17/99	9:20:20	5.0437	34.797	2.71094
11/17/99	9:21:20	5.10677	34.797	2.59961
11/17/99	9:22:21	5.06486	34.797	2.48828
11/17/99	9:23:22	5.02051	34.797	2.45117
11/17/99	9:24:23	5.02572	34.797	2.44141
11/17/99	9:25:23	5.01204	34.797	2.82227
11/17/99	9:26:24	5.14518	34.797	2.20703
11/17/99	9:27:24	5.01099	34.797	2.58398
11/17/99	9:28:25	5.08683	34.797	2.57812
11/17/99	9:29:25	5.132	34.8735	2.57227
11/17/99	9:30:26	5.02897	34.8735	2.32422
11/17/99	9:31:27	5.4646	34.8735	2.70508
11/17/99	9:32:27	5.0481	34.8735	2.20703
11/17/99	9:33:26	5.06234	34.8735	2.46094
11/17/99	9:34:27	5.15332	34.8735	2.45117
11/17/99	9:35:28	5.08887	34.8735	2.45703
11/17/99	9:36:28	5.09017	34.8735	2.46094
11/17/99	9:37:29	5.11938	34.8735	2.20312
11/17/99	9:38:29	5.07275	34.8735	2.20703
11/17/99	9:39:29	5.05444	34.8735	2.44531
11/17/99	9:40:30	5.08732	34.8735	2.58984
11/17/99	9:41:30	5.13892	34.8735	2.21289
11/17/99	9:42:30	5.10702	34.8735	1.96484
11/17/99	9:43:31	5.06689	34.8735	2.20703
11/17/99	9:44:32	5.03166	34.8735	2.46094
11/17/99	9:45:32	5.05583	34.8735	2.45703
11/17/99	9:46:32	5.08228	34.8735	2.20703
11/17/99	9:47:33	5.26497	34.8735	2.20703
11/17/99	9:48:34	4.97241	34.8735	1.95898
11/17/99	9:49:34	4.92171	34.8735	1.95898
11/17/99	9:50:35	5.0638	34.8735	2.20703
11/17/99	9:51:35	5.1932	34.8735	2.45703
11/17/99	9:52:36	5.10319	34.8735	2.33008
11/17/99	9:53:36	5.06551	34.8735	2.45703
11/17/99	9:54:37	5.00008	34.8735	2.20312
11/17/99	9:55:37	5.25952	34.8735	2.45117
11/17/99	9:56:38	5.16919	34.8735	2.21289
11/17/99	9:57:38	5.09456	34.8735	2.48828
11/17/99	9:58:39	5.07926	34.8735	2.21289
11/17/99	9:59:40	5.08219	34.8735	2.33398
11/17/99	10:00:40	4.96956	34.8735	2.38281
11/17/99	10:01:40	5.12354	34.8735	2.08594
11/17/99	10:02:40	5.1167	34.8735	2.44531
11/17/99	10:03:40	5.09644	34.8735	2.45117
11/17/99	10:04:41	5.13346	34.8735	2.45703
11/17/99	10:05:41	5.04997	34.8735	2.20703
11/17/99	10:06:42	5.13639	34.8735	2.33984

1 [BOILER OXYGEN AVG]
2 [COAL FLOW IN TONS PER HOUR]
4 [STACK 6 OPACITY]

DATE	TIME	1	2	4
11/17/99	10:07:43	5.07804	34.8735	2.44141
11/17/99	10:08:43	5.15308	35.2408	2.20703
11/17/99	10:09:44	5.19645	35.2408	2.33008
11/17/99	10:10:43	5.19027	35.2408	2.08008
11/17/99	10:11:45	5.2277	35.2408	2.20703
11/17/99	10:12:45	4.92651	35.2408	2.32422
11/17/99	10:13:48	5.15763	35.2408	2.48242
11/17/99	10:14:49	5.20817	35.2408	2.45117
11/17/99	10:15:49	5.11442	35.2408	2.08594
11/17/99	10:16:50	4.96899	35.2408	2.21289
11/17/99	10:17:51	5.10978	35.2408	2.33984
11/17/99	10:18:51	5.07682	35.2408	2.19727
11/17/99	10:19:52	5.13224	35.2408	2.20312
11/17/99	10:20:52	5.2522	35.2408	1.95898
		5.094714	**34.81306**	**2.443666**
11/17/99	11:10:15	4.94434	35.5577	2.33594
11/17/99	11:11:16	5.08203	35.5577	2.42969
11/17/99	11:12:17	5.10099	35.5577	2.38867
11/17/99	11:13:17	5.25464	35.5577	2.50977
11/17/99	11:14:18	5.11027	35.5577	2.38281
11/17/99	11:15:18	5.11792	35.5577	2.37695
11/17/99	11:16:19	5.19849	35.5577	2.39258
11/17/99	11:17:19	5.16789	35.5577	2.39844
11/17/99	11:18:20	5.13249	35.5577	2.28711
11/17/99	11:19:21	5.0861	35.5577	2.64258
11/17/99	11:20:20	5.09749	35.5577	2.27148
11/17/99	11:21:21	5.13875	35.5577	2.39258
11/17/99	11:22:21	5.12166	35.5577	2.51953
11/17/99	11:23:22	4.86125	35.5577	2.64258
11/17/99	11:24:23	5.08936	35.5577	2.52539
11/17/99	11:25:23	5.15723	35.5577	2.03906
11/17/99	11:26:24	5.13973	35.5577	2.64258
11/17/99	11:27:26	5.18994	35.5577	2.54688
11/17/99	11:28:25	5.09855	35.5577	2.64258
11/17/99	11:29:25	5.10718	35.5577	2.42578
11/17/99	11:30:26	5.06437	35.5577	2.51953
11/17/99	11:31:27	5.02018	35.5577	2.39844
11/17/99	11:32:27	4.98218	35.5577	2.27148
11/17/99	11:33:28	5.07983	35.5577	2.4043
11/17/99	11:34:27	5.17765	35.5577	2.27734
11/17/99	11:35:28	5.11922	35.5577	2.39258
11/17/99	11:36:28	5.11483	35.5577	2.76367
11/17/99	11:37:28	5.09839	35.5577	2.51953
11/17/99	11:38:30	5.17537	35.5577	2.53125
11/17/99	11:39:31	5.1145	35.9441	2.39844
11/17/99	11:40:31	5.06584	35.9441	2.4043
11/17/99	11:41:32	5.11475	35.9441	2.64258
11/17/99	11:42:31	5.06193	35.9441	2.27734
11/17/99	11:43:32	5.15063	35.9441	2.27734
11/17/99	11:44:33	5.17765	35.9441	2.51953
11/17/99	11:45:33	5.06893	35.9441	2.53711
11/17/99	11:46:34	5.16642	35.9441	2.36133
11/17/99	11:47:34	5.06722	35.9441	2.23438
11/17/99	11:48:35	5.05859	35.9441	2.23438
11/17/99	11:49:34	5.04875	35.9441	2.61133
11/17/99	11:50:35	5.05688	35.5485	2.47266
11/17/99	11:51:35	5.01204	35.5485	2.23438
11/17/99	11:52:36	4.95231	35.5485	2.48828
11/17/99	11:53:37	5.07275	35.5485	2.36133
11/17/99	11:54:37	5.04663	35.5485	2.48828
11/17/99	11:55:38	5.0791	35.5485	2.61133
11/17/99	11:56:38	5.06624	35.5485	2.36133
11/17/99	11:57:39	5.06803	35.5485	2.36719

1 [BOILER OXYGEN AVG]
2 [COAL FLOW IN TONS PER HOUR]
4 [STACK 6 OPACITY]

DATE	TIME	1	2	4
11/17/99	11:58:39	5.14925	35.5485	2.23438
11/17/99	11:59:40	5.12712	35.1848	2.60547
11/17/99	12:00:40	5.10474	35.1848	16.8164
11/17/99	12:01:41	5.07365	35.1848	0.550781
11/17/99	12:02:41	5.20516	35.1848	2.39844
11/17/99	12:03:41	5.10343	35.1848	2.63672
11/17/99	12:04:42	5.16715	35.1848	2.64258
11/17/99	12:05:42	5.17049	35.1848	2.48828
11/17/99	12:06:43	4.90918	35.1848	2.27734
11/17/99	12:07:42	5.15137	35.1848	2.51953
11/17/99	12:08:44	5.06787	35.1848	2.39844
11/17/99	12:09:43	5.1731	35.1848	2.52539
11/17/99	12:10:43	5.10522	35.1848	2.38867
11/17/99	12:11:44	5.05265	35.1848	2.54688
11/17/99	12:12:44	5.01562	35.1848	2.30859
11/17/99	12:13:45	5.1075	35.1848	2.4043
11/17/99	12:14:46	5.1814	35.1848	2.51953
11/17/99	12:15:46	5.14347	35.1848	2.26172
11/17/99	12:16:46	5.13607	35.5733	2.42969
11/17/99	12:17:47	5.11605	35.5733	2.54688
11/17/99	12:18:48	5.10132	35.5733	2.54688
11/17/99	12:19:48	5.10531	35.5733	2.43555
11/17/99	12:20:48	4.97453	35.5733	2.55664
11/17/99	12:21:49	5.15625	35.1621	2.44727
11/17/99	12:22:50	5.10189	35.1621	2.30859
11/17/99	12:23:50	5.10702	35.1621	2.43555
11/17/99	12:24:51	5.17155	35.1621	2.31836
11/17/99	12:25:52	5.47583	35.1621	2.29297
11/17/99	12:26:52	5.14144	35.1621	2.41016
11/17/99	12:27:52	5.1027	35.1621	2.41992
11/17/99	12:28:53	5.21037	35.1621	2.42969
11/17/99	12:29:54	5.10588	35.1621	2.41992
11/17/99	12:30:53	5.08862	35.1621	2.53711
11/17/99	12:31:54	5.1154	35.1621	2.55273
11/17/99	12:32:54	5.13127	35.1621	2.28711
11/17/99	12:33:53	5.04248	35.1621	2.29297
11/17/99	12:34:54	4.93652	35.1621	2.54688
11/17/99	12:35:54	5.15275	35.1621	2.04492
11/17/99	12:36:55	5.13745	35.1621	2.66406
11/17/99	12:37:55	5.03898	35.1621	2.29883
11/17/99	12:38:56	5.07992	35.1621	2.42969
11/17/99	12:39:57	5.24609	35.1621	2.31836
11/17/99	12:40:57	5.09863	35.1621	2.29883
11/17/99	12:41:58	5.29378	35.1621	2.2832
11/17/99	12:42:58	5.04297	35.1621	2.29297
11/17/99	12:43:59	5.13851	35.1621	2.28711
11/17/99	12:44:59	5.07284	35.1621	2.66406
11/17/99	12:46:00	5.08569	35.1621	2.42969
11/17/99	12:47:00	5.22282	35.1621	2.31445
11/17/99	12:48:01	5.10962	35.1621	2.58984
11/17/99	12:49:02	5.04639	35.1621	2.20898
11/17/99	12:50:02	5.23877	35.1621	2.21289
11/17/99	12:51:02	5.0612	35.1621	2.20898
11/17/99	12:52:02	5.34701	35.1621	2.21289
11/17/99	12:53:03	5.05965	35.1621	2.21875
11/17/99	12:54:04	5.22526	35.1621	2.33008
11/17/99	12:55:04	5.3584	35.1621	2.4043
11/17/99	12:56:05	5.09521	35.1621	2.47266
11/17/99	12:57:04	5.05851	35.1621	2.20898
11/17/99	12:58:05	5.17521	35.1621	2.46289
11/17/99	12:59:05	5.08903	35.1621	2.33594
11/17/99	13:00:06	5.10775	35.1621	2.33008
11/17/99	13:01:06	5.14884	35.1621	2.70117

1 [BOILER OXYGEN AVG]
2 [COAL FLOW IN TONS PER HOUR]
4 [STACK 6 OPACITY]

DATE	TIME	1	2	4
11/17/99	13:02:06	5.1123	35.1621	2.57812
11/17/99	13:03:07	5.07536	35.1621	1.9707
11/17/99	13:04:08	5.03451	35.1621	2.33594
11/17/99	13:05:07	5.04989	35.1621	2.36719
11/17/99	13:06:08	5.17822	35.1621	2.22461
11/17/99	13:07:09	5.09237	35.1621	2.32422
11/17/99	13:08:08	5.21387	35.1621	2.57812
11/17/99	13:09:09	5.50342	35.1621	2.67969
11/17/99	13:10:09	5.12345	35.1621	2.36719
11/17/99	13:11:11	5.12915	35.1621	2.5
11/17/99	13:12:12	5.07454	35.1621	2.33984
11/17/99	13:13:11	5.07503	35.1621	2.30859
11/17/99	13:14:14	5.05184	35.1621	2.45703
11/17/99	13:15:15	5.07096	35.1621	2.58984
11/17/99	13:16:15	5.08089	35.1621	2.43555
11/17/99	13:17:15	5.03687	35.1621	2.3457
11/17/99	13:18:16	5.17806	35.1621	2.62695
11/17/99	13:19:16	5.09831	35.1621	2.22461
11/17/99	13:20:16	5.21737	35.1621	2.63672
11/17/99	13:21:17	5.1438	35.1621	2.48242
11/17/99	13:22:17	5.06755	35.1621	2.46289
11/17/99	13:23:18	5.1499	35.1621	2.44727
11/17/99	13:24:19	5.18433	35.5541	1.9707
11/17/99	13:25:19	5.16732	35.5541	2.45703
11/17/99	13:26:20	5.16911	35.1869	2.20312
11/17/99	13:27:20	5.15438	35.1869	2.46289
11/17/99	13:28:21	5.02563	35.1869	2.21875
11/17/99	13:29:21	5.13949	35.1869	2.45117
11/17/99	13:30:21	5.2312	35.1869	2.37305
11/17/99	13:31:22	5.13745	35.1869	2.36133
11/17/99	13:32:23	5.13973	35.1869	2.22852
11/17/99	13:33:22	5.20996	35.1869	2.08594
11/17/99	13:34:23	5.16919	35.1869	2.4043
11/17/99	13:35:23	5.22119	35.1869	1.70508
11/17/99	13:36:24	5.01774	35.1869	2.31836
11/17/99	13:37:24	5.09245	35.1869	2.32422
11/17/99	13:38:24	5.16064	35.1869	2.57812
11/17/99	13:39:25	4.94377	35.1869	2.45117
11/17/99	13:40:25	5.19914	35.1869	2.32422
11/17/99	13:41:25	5.12565	35.1869	2.21289
11/17/99	13:42:26	5.13265	35.1869	2.33008
11/17/99	13:43:27	5.30135	35.1869	2.50391
11/17/99	13:44:27	5.24748	35.1869	2.39844
11/17/99	13:45:28	5.18009	35.1869	2.05469
		5.120292	**35.33806**	**2.480116**
11/17/99	14:30:50	5.41374	34.8083	2.30859
11/17/99	14:31:51	5.19279	34.8083	3.07617
11/17/99	14:32:51	5.2076	34.8083	2.27734
11/17/99	14:33:51	5.2408	34.8083	2.27734
11/17/99	14:34:51	5.18953	34.8083	2.18164
11/17/99	14:35:51	5.15316	34.8083	2.64258
11/17/99	14:36:52	5.24316	35.1947	2.33594
11/17/99	14:37:53	5.09481	35.1947	2.44141
11/17/99	14:38:53	5.08602	35.1947	2.32422
11/17/99	14:39:54	5.04948	34.8239	2.42969
11/17/99	14:40:54	5.13346	34.8239	2.39258
11/17/99	14:41:55	5.24609	34.8239	2.2832
11/17/99	14:42:55	5.10482	34.8239	2.4668
11/17/99	14:43:56	5.11955	34.8239	2.41016
11/17/99	14:44:57	5.11287	34.8239	2.50977
11/17/99	14:45:57	5.17391	34.8239	2.41016
11/17/99	14:46:58	5.13965	34.8239	2.41406
11/17/99	14:47:59	5.15072	34.4432	2.39844

1 [BOILER OXYGEN AVG]
2 [COAL FLOW IN TONS PER HOUR]
4 [STACK 6 OPACITY]

DATE	TIME	1	2	4
11/17/99	14:48:58	5.0918	34.4432	2.44141
11/17/99	14:49:59	5.26766	34.4432	2.20898
11/17/99	14:51:00	5.14323	34.4432	2.27734
11/17/99	14:52:00	5.23747	34.4432	2.39844
11/17/99	14:53:01	5.25741	34.4432	2.44727
11/17/99	14:54:01	5.19076	34.4432	2.4668
11/17/99	14:55:01	5.07202	34.4432	2.45703
11/17/99	14:56:02	5.22144	34.4432	2.45703
11/17/99	14:57:02	5.20077	34.4432	2.45703
11/17/99	14:58:02	5.12866	34.4432	2.20312
11/17/99	14:59:03	5.2373	34.8182	2.57812
11/17/99	15:00:03	5.17554	34.8182	2.59375
11/17/99	15:01:04	5.20728	34.8182	2.33008
11/17/99	15:02:04	5.12329	34.8182	2.27734
11/17/99	15:03:05	5.23853	34.8182	2.33984
11/17/99	15:04:06	5.18693	34.8182	2.51562
11/17/99	15:05:06	5.271	34.8182	2.52539
11/17/99	15:06:06	5.23551	34.8182	2.57422
11/17/99	15:07:06	5.13558	34.8182	2.5625
11/17/99	15:08:08	5.25358	34.4219	2.44727
11/17/99	15:09:07	5.1783	34.4219	3.80664
11/17/99	15:10:09	5.40951	34.4219	3.26172
11/17/99	15:11:08	5.21346	34.4219	3.11328
11/17/99	15:12:10	5.18449	34.4219	2.51562
11/17/99	15:13:10	5.16943	34.4219	2.43555
11/17/99	15:14:10	5.16512	34.8104	2.57812
11/17/99	15:15:10	5.20817	34.8104	2.33984
11/17/99	15:16:10	5.24202	34.8104	2.70508
11/17/99	15:17:10	5.20947	34.8104	2.49414
11/17/99	15:18:11	5.06307	34.8104	2.46289
11/17/99	15:19:11	5.15731	34.8104	2.46289
11/17/99	15:20:12	5.21517	34.8104	2.33008
11/17/99	15:21:12	5.18408	34.8104	2.45703
11/17/99	15:22:12	5.13835	34.8104	2.33594
11/17/99	15:23:14	5.27734	34.8104	2.36133
11/17/99	15:24:14	5.19425	34.8104	2.21289
11/17/99	15:25:14	5.20133	34.8104	2.57422
11/17/99	15:26:15	5.15397	34.8104	2.41992
11/17/99	15:27:16	5.10067	34.8104	2.21289
11/17/99	15:28:16	5.19076	34.8104	2.26172
11/17/99	15:29:16	5.2124	34.434	2.20312
11/17/99	15:30:17	5.12866	34.434	2.33594
11/17/99	15:31:18	5.23478	34.434	2.20312
11/17/99	15:32:18	5.15365	34.434	2.33008
11/17/99	15:33:20	5.18034	34.434	2.33594
11/17/99	15:34:19	5.21484	34.434	2.04492
11/17/99	15:35:19	5.15739	34.434	2.33984
11/17/99	15:36:21	5.13615	34.434	2.48242
11/17/99	15:37:21	5.0708	34.434	2.60547
11/17/99	15:38:21	5.09261	34.434	2.2832
11/17/99	15:39:23	5.24593	34.434	2.45703
11/17/99	15:40:22	5.17041	34.434	2.4668
11/17/99	15:41:23	5.20093	34.434	2.38867
11/17/99	15:42:23	5.14941	34.434	2.33594
11/17/99	15:43:23	5.13778	34.434	2.45703
11/17/99	15:44:24	5.20915	34.434	2.4668
11/17/99	15:45:24	5.22795	34.434	2.63672
11/17/99	15:46:24	5.22119	34.434	2.45703
11/17/99	15:47:25	5.2321	34.434	3.8125
11/17/99	15:48:25	5.19727	34.434	0.748047
11/17/99	15:49:26	5.09204	34.434	2.83203
11/17/99	15:50:26	5.12101	34.434	2.5625
11/17/99	15:51:27	5.21606	34.434	2.65234

1 [BOILER OXYGEN AVG]
2 [COAL FLOW IN TONS PER HOUR]
4 [STACK 6 OPACITY]

DATE	TIME	1	2	4
11/17/99	15:52:27	5.10107	34.434	2.32422
11/17/99	15:53:28	5.23299	34.434	2.46289
11/17/99	15:54:27	5.14062	34.434	2.77539
11/17/99	15:55:28	5.24886	34.434	1.10156
11/17/99	15:56:29	5.2041	34.434	2.31836
11/17/99	15:57:29	5.13574	34.434	2.44727
11/17/99	15:58:29	5.2006	34.434	2.3457
11/17/99	15:59:29	5.31486	34.434	2.39258
11/17/99	16:00:30	5.07397	34.434	2.46289
11/17/99	16:01:31	5.18457	34.434	2.4668
11/17/99	16:02:32	5.35742	34.434	2.45703
11/17/99	16:03:34	5.2111	34.434	2.45117
11/17/99	16:04:35	5.37663	34.434	2.33594
11/17/99	16:05:34	5.18644	34.434	2.45117
11/17/99	16:06:35	5.34294	34.434	2.57812
11/17/99	16:07:35	5.21859	34.434	2.61133
11/17/99	16:08:36	5.23576	34.434	2.21289
11/17/99	16:09:36	5.18823	34.434	2.21289
11/17/99	16:10:36	5.16113	34.434	2.45703
11/17/99	16:11:37	5.24528	34.434	2.43555
11/17/99	16:12:37	5.24146	34.434	2.54688
11/17/99	16:13:38	5.15137	34.434	2.31836
11/17/99	16:14:39	5.30672	34.434	2.45703
11/17/99	16:15:40	5.20435	34.434	2.46289
11/17/99	16:16:40	5.10636	34.434	2.51562
11/17/99	16:17:40	5.31266	34.434	2.44141
11/17/99	16:18:41	5.32414	34.434	2.57422
11/17/99	16:19:42	5.24967	34.434	2.45117
11/17/99	16:20:42	5.26058	34.434	2.44727
11/17/99	16:21:43	5.06095	34.434	2.5625
11/17/99	16:22:43	5.15275	34.434	2.32422
11/17/99	16:23:42	5.1735	34.434	2.44141
11/17/99	16:24:42	5.30509	34.434	2.44141
11/17/99	16:25:43	5.29004	34.434	2.57812
11/17/99	16:26:44	5.20719	34.434	2.45703
11/17/99	16:27:45	5.2609	34.434	2.71094
11/17/99	16:28:45	5.16016	34.434	2.72656
11/17/99	16:29:45	5.29305	34.434	2.57812
11/17/99	16:30:46	5.19076	34.434	2.54688
11/17/99	16:31:46	5.27962	34.434	2.72656
11/17/99	16:32:46	5.1888	34.434	2.70117
11/17/99	16:33:47	5.23226	34.434	2.57812
11/17/99	16:34:47	5.28613	34.434	2.46289
11/17/99	16:35:48	5.21061	34.434	2.48242
11/17/99	16:36:48	5.25155	34.434	2.57812
11/17/99	16:37:49	5.18864	34.434	2.46289
11/17/99	16:38:49	5.15096	34.434	2.57422
11/17/99	16:39:50	5.32926	34.434	2.57812
11/17/99	16:40:50	5.20492	34.434	2.45703
11/17/99	16:41:52	5.24235	34.434	2.45703
11/17/99	16:42:51	5.19604	34.434	2.32422
11/17/99	16:43:52	5.17228	34.434	2.33594
11/17/99	16:44:53	5.27913	34.434	2.47266
11/17/99	16:45:53	5.28125	34.434	2.58398
11/17/99	16:46:53	5.24626	34.434	2.73828
11/17/99	16:47:53	5.29728	34.434	2.69531
11/17/99	16:48:54	5.25977	34.434	2.44141
11/17/99	16:49:54	5.24333	34.434	2.57422
11/17/99	16:50:55	5.20785	34.434	2.45117
11/17/99	16:51:55	5.31502	34.8126	2.46289
11/17/99	16:52:55	5.19132	34.8126	2.33008
11/17/99	16:53:56	5.25431	34.8126	2.21289
11/17/99	16:54:56	5.26807	34.8126	2.38867

1 [BOILER OXYGEN AVG]
2 [COAL FLOW IN TONS PER HOUR]
4 [STACK 6 OPACITY]

DATE	TIME	1	2	4
11/17/99	16:55:56	5.16593	34.8126	2.33594
		5.202363	**34.56278**	**2.4566**

SUMMARY OF RESULTS CALCULATIONS

$$Vm\ (std) = 17.647 \times Vm \times \left[\frac{P_{bar} + \frac{DH}{13.6}}{(460 + Tm)} \right] \times Y$$

$$Vw\ (std) = 0.0471 \times Vlc$$

Vlc = water + silica net

$$Bws = \left[\frac{Vw\ (std)}{Vw\ (std) + Vm\ (std)} \right]$$

$$Md = (0.44 \times \%CO_2) + (0.32 \times \%O_2) + [0.28 \times (100 - \%CO_2 - \%O_2)]$$

$$MS = Md \times (1 - Bws) + (18 \times Bws)$$

$$Vs = \sqrt{\frac{(Ts + 460)}{Ms \times Ps}} \times \sqrt{DP} \times Cp \times 85.49$$

Cp = pitot tube correction factor
Ps = absolute flue gas pressure
Ms = molecular weight of gas (lb/lb mole)
Md = dry molecular weight of gas (lb/lb mole)
Bws = water vapor in gas stream proportion by volume

$$Acfm = Vs \times Area\ (of\ stack\ or\ duct) \times 60$$

$$Dscfm = Acfm \times 17.647 \times \left[\frac{Ps}{(460 + Ts)} \right] \times (1 - Bws)$$

$$Scfm = Acfm \times 17.647 \times \left[\frac{Ps}{(460 + Ts)} \right]$$

$$Scfh = Scfm \times 60 \frac{min}{hr}$$

©Mostardi-Platt Associates, Inc.

CALCULATION FORMULAS

1. $$V_{m(std)} = V_m Y \left(\frac{T_{std}}{T_m}\right)\left(\frac{P_{bar} + \frac{\Delta H}{13.6}}{P_{std}}\right) = K_1 V_m Y \frac{P_{bar} + \frac{\Delta H}{13.6}}{T_m}$$

2. $$V_{w(std)} = V_{lc}\left(\frac{\rho_w}{M_w}\right)\left(\frac{RT_{std}}{P_{std}}\right) = K_2 V_{lc}$$

3. $$B_{ws} = \frac{V_{w(std)}}{V_{m(std)} + V_{w(std)}}$$

4a. $$C_a = \frac{m_a}{V_a \rho_a}$$

4b. $$W_a = C_a V_{aw} \rho_a$$

5. $$C_S = (15.43 \text{ grains/gram})\,(m_n / V_{m(std)})$$

6. $$C_{acf} = 15.43 K_i \left(\frac{m_n P_s}{V_{w(std)} + V_{m(std)}\, T_s}\right)$$

7. $$\%EA = \left(\frac{\%O_2 - (0.5\,\%CO}{0.264\,\%N_2 - (\%O_2 - 0.5\,\%CO)}\right) \times 100$$

8. $$M_d = 0.44(\%CO_2) + 0.32(\%O_2) + 0.28(\%N_2 + \%CO)$$

9. $$M_s = M_d(1 - B_{ws}) + 18.0 B_{ws}$$

10. $$v_s = K_p C_p \sqrt{\frac{\Delta P\, T_s}{P_s M_s}}$$

11. $$Q_{acfm} = v_s A(60_{sec/min})$$

12. $$Q_{sd} = (3600_{sec/hr})(1 - B_{ws})\, v_s \left(\frac{T_{std} P_s}{T_s P_{std}}\right) A$$

13. $$E \text{ (emission rate, lbs/hr)} = Q_{std}(C_s / 7000 \text{ grains/lb})$$

14. $$IKV = \frac{T_s V_{m(std)} P_{std}}{T_{std} v_s \theta A_n P_s 60(1 - B_{ws})} = K_4 \frac{T_s V_{m(std)}}{P_s v_s A_n \theta (1 - B_{ws})}$$

© Mostardi-Platt Associates, Inc.

NOMENCLATURE

A = Cross-sectional area of stack or duct, ft^2
A_n = Cross-sectional area of nozzle, ft^2
B_{ws} = Water vapor in gas stream, proportion by volume
C_a = Acetone blank residue concentration, g/g
C_{acf} = Concentration of particulate matter in gas stream at actual conditions, gr/acf
C_p = Pitot tube coefficient, dimensionless
C_s = Concentration of particulate matter in gas stream, dry basis, corrected to standard conditions, gr/dscf
IKV = Isokinetic sampling variance, must be $.90 \leq IKV \leq 1.10$
M_d = Dry molecular weight of gas, lb/lb-mole
m_n = Total amount of particulate matter collected, grams
M_s = Molecular weight of gas, wet basis, lb/lb-mole
M_w = Molecular weight of water, 18.0 lb/lb-mole
m_a = Mass of residue of acetone after evaporation, grams
P_{bar} = Barometric pressure at testing site, in. Hg
P_g = Static pressure of gas, in. Hg (in. H_2O/13.6)
P_s = Absolute pressure of gas, in. Hg = $P_{bar} + P_g$
P_{std} = Standard absolute pressure, 29.92 in. Hg
Q_{acfm} = Actual volumetric gas flow rate, acfm
Q_{sd} = Dry volumetric gas flow rate corrected to standard conditions, dscf/hr
R = Ideal gas constant, 21.85 in. Hg-ft^3/°R-lb-mole
T_m = Absolute dry gas meter temperature, °R
T_s = Absolute gas temperature, °R
T_{std} = Standard absolute temperature, 528°R
V_a = Volume of acetone blank, ml
V_{aw} = Volume of acetone used in wash, ml
V_{lc} = Total volume of liquid collected in impingers and silica gel, ml
V_m = Volume of gas sample as measured by dry gas meter, dcf
$V_{m(std)}$ = Volume of gas sample measured by dry gas meter, corrected to standard conditions, dscf
v_s = Gas velocity, ft/sec
$V_{w(std)}$ = Volume of water vapor in gas sample, corrected to standard conditions, scf
W_a = Weight of residue in acetone wash, grams
Y = Dry gas meter calibration factor
ΔH = Average pressure differential across the orifice meter, in. H_2O
Δp = Velocity head of gas, in. H_2O
ρ_a = Density of acetone, 0.7855 g/ml (average)
ρ_w = Density of water, 0.002201 lb/ml
θ = Total sampling time, minutes
K_1 = 17.64 °R/in. Hg
K_2 = 0.04707 ft^3/ml
K_4 = 0.09450/100 = 0.000945
K_p = Pitot tube constant, $85.49 \frac{ft}{sec}\left[\frac{(lb/lb-mole)(in.Hg)}{(°R)(in.H_2O)}\right]^{1/2}$
%EA = Percent excess air
$\%CO_2$ = Percent carbon dioxide by volume, dry basis
$\%O_2$ = Percent oxygen by volume, dry basis
%CO = Percent carbon monoxide by volume, dry basis
$\%N_2$ = Percent nitrogen by volume, dry basis
0.264 = Ratio of O_2 to N_2 in air, v/v
0.28 = Molecular weight of N_2 or CO, divided by 100
0.32 = Molecular weight of O_2 divided by 100
0.44 = Molecular weight of CO_2 divided by 100
13.6 = Specific gravity of mercury (Hg)

© Mostardi-Platt Associates, Inc.

MERCURY CALCULATIONS

Determination of Speciated Mercury

Concentration

$$\frac{\text{ug of Mercury detected} \times \frac{10^{-6}\,\text{g}}{\text{ug}}}{453.6\,\text{g/lb}} = \text{lbs Mercury/sample}$$

$$\frac{\text{lbs Mercury/sample}}{\text{Vm(std)}} = \text{lbs Mercury/dscf}$$

Emission Rates

$$\text{lbs Mercury/hr} = \text{lbs/dscf} \times \text{dscf/min} \times 60\ \text{min/hr}$$

$$\text{lbs Mercury}/10^{12}\,\text{Btu} = \text{lbs/dscf} \times F_d\,\text{Factor}\left(\text{dscf}/10^{6}\,\text{Btu}\right) \times \frac{20.9\%}{20.9\% - O_2\%} \times 10^{6}$$

Mercury Fractions

Elemental Mercury Catch – mercury collected in the acidified hydrogen peroxide (HNO_3-H_2O_2) and potassium permanganate (H_2SO_4-$KMnO_4$) impinger solutions.

Oxidized Mercury Catch – mercury collected in the aqueous potassium chloride (KCl) impinger solution.

Particle-bound Mercury Catch – mercury associated with the particulate matter collected in the front half of the sampling train.

Determination of Mercury Available from Coal

$$\text{lbs Mercury/hr} = \frac{\text{ug Mercury}}{\text{g Coal}}(\text{dry}) \times \frac{10^{-6}\,\text{g}}{\text{ug}} \times \frac{\text{lbs Coal (wet)}}{\text{hr}} \times (1 - B_{ws})\ \text{moisture corr.}$$

$$\text{lbs Mercury}/10^{12}\,\text{Btu} = \frac{\text{lbs Mercury}}{\text{hr}} \div \frac{10^{12}\,\text{Btu}}{\text{hr}}$$

© Mostardi-Platt Associates, Inc.

EMISSION RATE CALCULATIONS

A pollutant emission rate (E), expressed as pounds of pollutant per million Btu heat input from the fuel combusted can be calculated by several methods as follows:

1. $C = C_s/7000$ where, C = pollutant concentration, lb/dscf
   c_s = pollutant concentration, grains/dscf

2. If fuel flow is monitored and the fuel combusted during the test is sampled and analyzed for gross calorific value, then:

$$E = \frac{Q_{sd} C}{\text{fuel flow rate (lb / hr) GCV}} \times 10^6$$

where, E = lbs per million Btu
GCV = gross calorific value, Btu / lb
Q_{sd} = dry volumetric gas flow at standard conditions, dscf / hr

3. If an integrated gas sample is taken during the test and analyzed for $\%CO_2$ or $\%O_2$, dry basis by volume, with an Orsat gas analyzer, then

$$E = C F_c \frac{100}{(\%CO_2)} \text{ or, } E = C F \frac{20.9}{(20.9 - \%O_2)} \text{ where,}$$

$\%CO_2$ and $\%O_2$ are expressed as percent; and, for example, for subbituminous and bituminous coals:

F_c = a factor representing a ratio of the volume of carbon dioxide generated to the calorific value of the fuel combusted, 1800 scf CO_2/million Btu.

F = a factor representing a ratio of the volume of dry flue gases generated to the calorific value of the fuel combusted, 9780 dscf/million Btu.

4. If fuel sample increments are taken and composited during the test and an ultimate analysis is performed and the GCV is determined, then

$$F_c = \frac{321 \times 10^3 (\%C)}{GCV} \text{ where, } \%C = \text{carbon content by weight expressed as percent}$$

$$F = \frac{[3.64 (\%H) + 1.53 (\%C) + 0.57 (\%S) + 0.14 (\%N) - 0.46 (\%O_2)]}{GVC} \times 10^6$$

where, H, C, S, N, and O are content by weight of hydrogen, carbon, sulfur, nitrogen, and oxygen (expressed as percent) respectively.

5. If fuels other than subbituminous and bituminous coals are fired, other F-factors than those above will apply; and, if combinations of different fuels are fired, the F-factors must be prorated according to the fraction of the total heat input derived from each type of fuel.

© Mostardi-Platt Associates, Inc.

MOSTARDI-PLATT ASSOCIATES, INC.
TEST SUPPORT DATA

TEST RUN NO. 1

COMPANY: WEPCO
PLANT: POINT WASHINGTON Power Plant
TEST LOCATION: UNIT 4 ^ INLET Air Heater
CLIENT: EPRI (Electric Power Research Institute)
OPERATOR: JRP
DATE: 11/17/99
CONTROL BOX: E-12 POT. NO.: E-12
METER NO.: E-12
METER CALIBRATION FACTOR: 0.997
PITOT ID NO.: 2568
PITOT TUBE COEFFICIENT: 0.831
PORT LENGTH: 10.5 in.
PORT SIZE: 4 in.
PORT TYPE: COUPLING

IMPINGER H_2O
FINAL: 4863.4 ml/gm
INITIAL: 4789.1 ml/gm
GAIN: 74.3 ml/gm

SILICA GEL:
FINAL WT: 812.9 gm
INITIAL WT: 796.6 gm
WT. GAIN: 16.3 gm

TOTAL H_2O COLLECTED: 90.6
DESCRIPTION OF IMPINGER H_2O:
SILICA GEL EXHAUSTED?:
IMPINGERS RECOVERED BY:
SILICA GEL WEIGHED BY:

COMMENTS & NOTES

THIMBLE NO: 045 TARE WT: 3.3794
FILTER NO: — TARE WT: —
BAROMETRIC PRESSURE in. Hg: 29.68
FLUE PRESSURE in. H_2O: -4.5
FLUE PRESSURE in. Hg ABS: 29.35
PROBE LENGTH: 5 ft.
PROBE LINER MATERIAL: GLASS
NOZZLE IDENTIFICATION NO: SET #1 NOZZLE #3
CALIBRATED NOZZLE DIAMETER: 0.311
LEAK CHECK: PRE: 0.00 POST: 0.00 @ 15/19 in. Hg
DUCT SHAPE: Rect. DIAMETER: —
DUCT AREA: 350.00 sq. ft. L 5' W 70'
DISTURBANCE UPSTREAM: DOWNSTREAM:
TEST LENGTH: 120 min
MINUTES PER POINT: 20
TOTAL NUMBER OF TRAVERSE POINTS: 6
GAS ANALYSIS (ORSAT/FYRITE):
CO_2: 14.2 14.2 14.2
O_2: 4.3 4.3 4.3

PITOT LEAK CHECK: PRE ✓ POST ✓
ΔH@ ✓
SAMPLES REMOVED FROM SITE BY: JRP/JW

For computer data entry: Supervisor, please complete.
Do you want to enter a fuel analysis? Y ☐ N ☐
What value do you want to use? I_r = 9,780 F_c = 1,800 Other = _____
Circle to indicate "Yes" or add other value if not given.

© Mostardi-Platt Associates, Inc.

FIELD TEST DATA SHEET
FOR ISOKINETIC SAMPLING

MOSTARDI-PLATT ASSOCIATES, INC

PROJECT WEPCO - Port Washington
TEST RUN NO. 1
TEST LOCATION UNIT 4 Inlet

DATE 11/17/99 PAGE 1 OF 1

Port-Point No.	Velocity Head (P) in. H_2O	$\sqrt{P}$	Clock Time 24 hr.	Meter Volume (Vm) ft^3	3.26 Orifice (H) in. H_2O	Stack Temp (t_s) °F	Meter Temp. (t_m) Inlet °F	Meter Temp. (t_m) Outlet °F	1.09 Meter Rate cfm	Pump Vacuum in. Hg	Notes	Probe Temp. °F	Filter Holder Temp. °F	Imping Outle Temp.
1-1	0.15	0387	0800	73.90	048	760	84	84	0.42	4.0		242	230	FULL
1	0.15	0.387	0805	76.00	0.48	760	84	84	0.42		76.00	248	230	Dos
1	0.15	0.387	0810	78.20	0.48	759	85	84	042		78.10	247	230	
1	0 15	0 387	0815	80.30	048	759	84	84	042		80.20	246	230	
2	0.18	0.424	0820	82.25	0.59	757	88	85	0.46		82.30	245	230	
2	0.18	0424	0825	84.50	0.59	755	88	85	0.46		84.60	240	230	
2	0.18	0.424	0830	86.75	0.59	755	89	86	0.46		86.90	245	233	
2	0 18	0.424	0835	89.00	0.59	757	90	87	0.46		89.20	246	233	
3	0.24	0.490	0840	91.35	077	756	91	87	053	8.0	91.50	245	230	
3	0 24	0.490	0845	94.00	0.77	756	92	88	0.53		94.15	245	230	
3	0.24	0490	0850	96.80	077	756	93	88	053		96.80	245	230	
3	0.24	0.490	0855	99.50	0.77	751	93	89	0.53		99.45	245	232	
	-1 18	1.30	0900	102.15	1.54	9086		2094			102.10			
2-1	0.12	0.346	0914	103.33	0.38	764	91	90	0.38			247	236	
1	0.12	6 346	0919	102.20	0.38	764	91	90	0.38		105.23	250	235	
1	0.12	0.346	0924	107.05	0.38	764	92	90	0.38		107.13	240	231	
1	0.12	0.346	0929	109.00	038	763	94	91	0.38		109 03	249	231	
2	0.19	0.436	0934	110.80	0.62	759	95	92	048	6.0	110.93	247	230	
2	0.19	0436	0939	113.20	0.62	759	96	92	048		113.33	249	230	
2	0 19	0.436	0944	115.60	0.62	759	97	93	0.48		115.73	245	230	
2	0 19	0.436	0949	118.00	0.62	758	97	94	048		118.13	246	230	
3	0 21	0458	0954	120.35	0 68	758	97	93	0.50	7.5	120.53	246	230	
3	0.21	0458	0959	122.85	0 68	759	97	94	050		123.03	246	230	
3	0 21	0.458	1004	125.35	0.68	759	97	94	0.50		125.53	246	230	
3	0 21	0.458	1009	127.93	0.68	760	97	94	0 50		128.03	247	230	
			1014	130.35		9126		2248			130.53			
		2.541		-73.90	3.52									
		6.4235		- 1.18	0.587	758.8		90.5						
				55 27		1218.8		550.5						

MOSTARDI-PLATT ASSOCIATES, INC.
TEST SUPPORT DATA

TEST RUN NO. 2

COMPANY: WEPCO
PLANT: Port Washington
TEST LOCATION: Unit 4 Inlet
CLIENT: Erol
OPERATOR: JNP
DATE: 11/17/99
CONTROL BOX: E-12 POT. NO.: E-12
METER NO.: E-12
METER CALIBRATION FACTOR: 0.997
PITOT ID NO.: 256B
PITOT TUBE COEFFICIENT: 0.831
PORT LENGTH: 10.5 in.
PORT SIZE: 4 in.
PORT TYPE: Couplings

IMPINGER H_2O
FINAL: 4810.9 ml/gm
INITIAL: 4775.0 ml/gm
GAIN: 35.9 ml/gm
TOTAL H_2O COLLECTED: 47.4

SILICA GEL:
FINAL WT: 745.0 gm
INITIAL WT: 733.5 gm
WT. GAIN: 11.5 gm

DESCRIPTION OF IMPINGER H_2O:
SILICA GEL EXHAUSTED?:
IMPINGERS RECOVERED BY:
SILICA GEL WEIGHED BY:

COMMENTS & NOTES

THIMBLE NO: 088 TARE WT: 33898
FILTER NO: — TARE WT: —
BAROMETRIC PRESSURE in. Hg: 29.68
FLUE PRESSURE in. H_2O: -4.7
FLUE PRESSURE in. Hg ABS: 2933
PROBE LENGTH: 5 ft.
PROBE LINER MATERIAL: GLASS
NOZZLE IDENTIFICATION NO: ~~Set 1~~ Nozzle #3
CALIBRATED NOZZLE DIAMETER: 0.311
LEAK CHECK: PRE: 0.00 POST: _____ @ 16 in. Hg
DUCT SHAPE: Rect DIAMETER: —
DUCT AREA: 350.00 sq. ft. L 5' W 70'
DISTURBANCE UPSTREAM: DOWNSTREAM:
TEST LENGTH: 60 min
MINUTES PER POINT: 10
TOTAL NUMBER OF TRAVERSE POINTS: 6
GAS ANALYSIS (ORSAT/FYRITE):

CO_2:	14.5	14.5	14.5
O_2:	4.3	4.3	4.3

PITOT LEAK CHECK: PRE _____ POST _____
ΔH@ _____
SAMPLES REMOVED FROM SITE BY:

For computer data entry: Supervisor, please complete.
Do you want to enter a fuel analysis? Y ☐ N ☐
What value do you want to use? F = 9,780 F_c = 1,800 Other = _____
Circle to indicate "Yes" or add other value if not given.

Form 1053 [Rev. 6/97]

© Mostardi-Platt Associates, Inc.

FIELD TEST DATA SHEET
FOR ISOKINETIC SAMPLING

MOSTARDI-PLATT ASSOCIATES, INC.

PROJECT WEPCO Port Washington
TEST RUN NO. 2
TEST LOCATION UNIT 4 INLET

DATE 11/17/99 PAGE 1 OF 1

Port-Point No.	Velocity Head (P) in. H_2O	$\sqrt{P}$	Clock Time 24 hr.	Meter Volume (Vm) ft^3	3.26 Orifice (H) in. H_2O	Stack Temp (t_s) °F	Meter Temp. (t_m) Inlet °F	Meter Temp. (t_m) Outlet °F	1.09 Meter Rate cfm	Pump Vacuum in. Hg	Notes	Probe Temp. °F	Filter Holder Temp. °F	Impinger Outlet Temp. °F
2-1	0.11	0.332	1110	30.03	0.36	766	92	92	0.36	4.0		254	230	FULLY
1	0.11	0.332	1115	32.00	0.36	766	91	92	0.36		31.83	252	230	ICED
1	0.11	0.332	1120	33.75	0.36	766	91	91	0.36		33.63	252	230	
1	0.11	0.332	1125	35.75	0.36	765	91	91	0.36		35.43	249	230	
2	0.18	0.424	1130	37.20	0.59	765	91	90	0.46		37.23	251	230	
2	0.18	0.424	1135	39.65	0.59	764	92	90	0.46	5.0	39.53	248	230	
2	0.18	0.424	1140	41.95	0.59	764	92	90	0.46		41.83	248	231	
2	0.18	0.424	1145	44.17	0.59	764	92	90	0.46		44.13	247	232	
3	0.22	0.469	1150	46.35	0.72	762	92	90	0.51		46.43	248	231	
3	0.22	0.469	1155	48.87	0.72	763	89	89	0.51		48.98	250	230	
3	0.22	0.469	1200	51.40	0.72	762	85	85	0.51		51.53	251	230	
3	0.22	0.469	1205	53.90	0.72	761	84	84	0.51		54.08	249	230	
			1210	56.30							56.63			
1-1	~~0.12~~	~~0.346~~	~~1217~~	~~57.18~~	~~0.39~~	~~763~~	~~82~~	~~82~~	~~0.38~~			247	230	
1			1222								5908			
1			1227											
1			1232											
2			1237											
2			1242											
2			1247											
2			1252											
3			1257											
3			1302											
3			1307											
3			1312											
			1317											
				-30.03				7064						
				-0.88		763.9		80						
		0.4083		25.39	0.557	1223.9		546.0						

Test stopped after 1 hour sampling - thimble holder cracked

Form 1026 [Rev. 5/27]

© Mostardi-Platt Associates, Inc.

MOSTARDI-PLATT ASSOCIATES, INC.
TEST SUPPORT DATA

TEST RUN NO. 3

COMPANY: WEPCO
PLANT: Port Washington
TEST LOCATION: Unit 4 Inlet
CLIENT: EPRI
OPERATOR: JRB
DATE: 11/17/99
CONTROL BOX: F-12 POT. NO.: F-12
METER NO.: F-12
METER CALIBRATION FACTOR: 0.997
PITOT ID NO.: 256B
PITOT TUBE COEFFICIENT: 0.831
PORT LENGTH: 10.5 in.
PORT SIZE: 4 in.
PORT TYPE: Cowling

IMPINGER H_2O
FINAL: 4870.8 ml/gm
INITIAL: 4797.8 ml/gm
GAIN: 73.0 ml/gm
TOTAL H_2O COLLECTED: 90.9

SILICA GEL:
FINAL WT: 804.3 gm
INITIAL WT: 786.4 gm
WT. GAIN: 17.9 gm

DESCRIPTION OF IMPINGER H_2O:
SILICA GEL EXHAUSTED?:
IMPINGERS RECOVERED BY:
SILICA GEL WEIGHED BY:

COMMENTS & NOTES

THIMBLE NO: 081 TARE WT:
FILTER NO: — TARE WT: —
BAROMETRIC PRESSURE in. Hg: 29.68
FLUE PRESSURE in. H_2O: -4.7
FLUE PRESSURE in. Hg ABS: 29.33
PROBE LENGTH: 5 ft.
PROBE LINER MATERIAL: GLASS
NOZZLE IDENTIFICATION NO: Set #1 Nozzle #3
CALIBRATED NOZZLE DIAMETER: 0.311
LEAK CHECK: PRE: 0.00 POST: 0.00 @ 19/20 in. Hg
DUCT SHAPE: Rect. DIAMETER: —
DUCT AREA: 350 00 sq. ft. L 5' W 70'
DISTURBANCE UPSTREAM: DOWNSTREAM:
TEST LENGTH: 120 min
MINUTES PER POINT: 20
TOTAL NUMBER OF TRAVERSE POINTS: 6
GAS ANALYSIS (ORSAT/FYRITE):
CO_2: 14.2 14.2 14.2
O_2: 4.5 4.5 4.5

PITOT LEAK CHECK: PRE POST
ΔH@
SAMPLES REMOVED FROM SITE BY:

For computer data entry: Supervisor, please complete.
Do you want to enter a fuel analysis? Y ☐ N ☐
What value do you want to use? I = 9,780 F_c = 1,800 Other = _____
Circle to indicate "Yes" or add other value if not given.

52

© Mostardi-Platt Associates, Inc.

FIELD TEST DATA SHEET
FOR ISOKINETIC SAMPLING

MOSTARDI-PLATT ASSOCIATES, INC.

PROJECT INTERCO Pond WASHINGTON
TEST RUN NO. 3
TEST LOCATION UNIT 4 Inlet

DATE 11/17/99 PAGE 1 OF 1

Port-Point No.	Velocity Head (P) in. H_2O	$\sqrt{P}$	Clock Time 24 hr.	Meter Volume (Vm) ft^3	3.26 Orifice (H) in. H_2O	Stack Temp (t_s) °F	Meter Temp. (t_m) Inlet °F	Meter Temp. (t_m) Outlet °F	1.05 Meter Rate cfm	Pump Vacuum in. Hg	Notes	Probe Temp. °F	Filter Holder Temp. °F	Impinger Outlet Temp. °F
1-1	0.15	0.387	1430	59.35	0.49	762	82	81	0.42	4.5		249	231	FULL
1	015	0.387	1435	61.50	0.49	763	82	81	0.42		61.45	255	230	ICE
1	015	0.387	1440	63.65	0.49	765	82	81	0.42		63.55	252	229	
1	0.15	0.387	1445	65.70	0.49	763	83	81	0.42		65.65	255	229	
2	0.19	0.436	1450	67.72	0.62	764	83	82	0.48		67.75	256	229	
2	0.19	0.436	1455	70.00	0.62	763	84	82	0.48		70.15	255	230	
2	0.19	0.436	1500	72.50	062	763	85	83	0.48		72.55	256	230	
2	0.19	0.436	1505	74.80	0.62	762	85	83	0.48		74.95	256	230	
3	0.23	0.480	1510	77.25	0.75	762	86	83	0.52	6.5	77.35	257	230	
3	0.23	0.480	1515	79.90	0.75	761	87	83	0.52		79.95	257	230	
3	0.23	0.480	1520	82.50	0.75	761	86	84	0.52		82.55	257	231	
3	0.23	0.480	1525	85.10	0.75	761	87	84	0.52		85.15	256	231	
	(-0.93)	(1.3-3)	1530	87.75	(1.86)	(9150)		(2000)			87.75			
2-1	0.13	0.361	1539	88.71	0.42	755	85	84	0.39			253	231	
1	0.13	0.361	1544	90.75	0.42	765	84	84	0.39		90.66	257	230	
1	0.13	0.361	1549	92.70	0.42	765	84	84	0.39		92.61	258	229	
1	0.13	0.361	1554	94.60	0.42	765	84	84	0.39	8.0	94.56	256	230	
2	0.19	0.436	1559	96.50	0.62	765	85	84	0.48		96.51	260	230	
2	0.19	0.436	1604	98.75	0.62	766	84	83	0.48		98.91	256	230	
2	0.19	0.436	1609	101.20	0.62	766	84	84	0.48		101.31	255	229	
2	0.19	0.436	1614	103.56	0.62	766	83	83	0.48		103.71	255	229	
3	0.20	0.447	1619	106.00	0.65	765	83	83	0.49	10.0	106.11	256	229	
3	0.20	0.447	1624	108.60	0.65	765	83	83	0.49		108.56	256	228	
3	0.20	0.447	1629	110.95	0.65	766	83	83	0.49		111.01	256	225	
3	0.20	0.447	1634	113.40	0.65	766	83	82	0.49	11.0	113.46	256	228	
			1639	115.90							115.91			
				-54.35										
				-0.93										
				55.62										

53

© Mostardi-Platt Associates, Inc.

PITOT TRAVERSE DATA

Project: WFRC - PORT WASHINGTON 4

Location: INLET

Date: 11/16/99 Test No: NULL POINT TRAVERSE Time: 600

Point No.	ΔP	√ΔP	t_s	α	Point No.	ΔP	√ΔP	t_s	α
1-1	0.14	0.374	758	0					
2	0.15	0.387	760	5					
3	0.26	0.510	745	0					
2-1	0.17	0.412	760	10					
2	0.18	0.424	761	13					
3	0.29	0539	750	13					
		0.441	756						
			1216						

P_{bar} 24.53 "Hg Static -47 "H_2O P_g ____ "Hg P_s 29.18 "Hg Pitot ID ____ C_p .831 Temp. ID ____

0.44 × 15.0 %CO_2 = ____ √ΔP ____ t_s ____ °F T ____ °R Flue Area ____ ft²

0.32 × 3.0 %O_2 = + ____ Duct Dimensions ____

0.28 × 82.0 %N_2 = + ____ B_{ws} ____ 1 - B_{ws} ____ Disturbance: Upstream ____

(30.52 Md × ____ 1-B_{ws}) + (18 × ____ B_{ws}) = 29.268 (Ms) Downstream ____

$$v_s = 85.49 \times \_\_\_\_ Cp \times \sqrt{\frac{(\_\_\_\_)Ts\ °R}{\_\_\_\_ Ms \times \_\_\_\_ Ps}} \times \_\_\_\_ \sqrt{\Delta P} = \_\_\_\_ \text{ ft/sec (Vs)}$$

Q_{acfm} = ____ Vs × ____ Flue Area × 60 = ____ acfm Port Length ____ Inches

$$Q_{dscfm} = 17.647 \times ACFM \times \frac{Ps}{Ts\ °R} = \_\_\_\_ \text{ SCFM}$$

$$Q_{dscfm} = 17.647 \times ACFM \times \frac{Ps}{Ts\ °R} \times (1\text{-}Bws) = \_\_\_\_ \text{ DSCFM}$$

Pre-test leak check ____ "H_2O

Post-test leak check ____ "H_2O

Data Taken By: ____

Field Engineer / Test Technician

©Mostardi-Platt Associates Inc.

MOSTARDI-PLATT ASSOCIATES, INC.
TEST SUPPORT DATA

TEST RUN NO. #1

COMPANY: WEPCO
PLANT: PORT WASHINGTON Power Plant
TEST LOCATION: Unit #4 OUTLET Precip.
CLIENT: Electric Power Research Institute
OPERATOR: D. Helm/N. Smith
DATE: 17 Nov 1999
CONTROL BOX: E-51 POT. NO.: E-51
METER NO.: E-51
METER CALIBRATION FACTOR: 1.009
PITOT ID NO.: 427A
PITOT TUBE COEFFICIENT: 0.830
PORT LENGTH: 21" in.
PORT SIZE: 6" in.
PORT TYPE: FLANGE

IMPINGER H_2O
FINAL: 4831.7 ml/gm
INITIAL: 4735.4 ml/gm
GAIN: 96.3 ml/gm
TOTAL H_2O COLLECTED: 110.3

SILICA GEL:
FINAL WT: 776.0 gm
INITIAL WT: 762.0 gm
WT. GAIN: 14.0 gm

DESCRIPTION OF IMPINGER H_2O:
SILICA GEL EXHAUSTED?:
IMPINGERS RECOVERED BY:
SILICA GEL WEIGHED BY:

COMMENTS & NOTES

THIMBLE NO: 076 TARE WT: 3.3644
FILTER NO: TARE WT:
BAROMETRIC PRESSURE in. Hg: 29.68
FLUE PRESSURE in. H_2O: -2.10
FLUE PRESSURE in. Hg ABS: 29.53
PROBE LENGTH: 11' ft.
PROBE LINER MATERIAL: TEFLON
NOZZLE IDENTIFICATION NO: #8
CALIBRATED NOZZLE DIAMETER: .245
LEAK CHECK: PRE: 0.002 POST: @ 6 in. Hg
DUCT SHAPE: RECTANGULAR DIAMETER:
DUCT AREA: 115.56 sq. ft. L 10.75 W 10.75
DISTURBANCE UPSTREAM: 0.37 DIA. DOWNSTREAM: 0.65 DIA.
TEST LENGTH: 125 MINUTES min
MINUTES PER POINT: 5 MINUTES
TOTAL NUMBER OF TRAVERSE POINTS: 25
GAS ANALYSIS (ORSAT/FYRITE):
CO_2: 13.0
O_2: 6.0

PITOT LEAK CHECK: PRE ✓ POST ✓
ΔH@
SAMPLES REMOVED FROM SITE BY:

For computer data entry: Supervisor, please complete.
Do you want to enter a fuel analysis? Y ☐ N ☐
What value do you want to use? F = 9,780 F_c = 1,800 Other =
Circle to indicate "Yes" or add other value if not given.

Form 1053 [Rev. 6/97]

© Mostardi-Platt Associates, Inc.

FIELD TEST DATA SHEET
FOR ISOKINETIC SAMPLING

MOSTARDI-PLATT ASSOCIATES, INC

PROJECT WEPCO - Port Washington
TEST RUN NO. #1
TEST LOCATION Unit #4 - Outlet

DATE 17 Nov 99 PAGE 1 OF 2

Port-Point No.	Velocity Head (P) in. H_2O	$\sqrt{P}$	Clock Time 24 hr.	Meter Volume (Vm) ft^3	1.8595 Orifice (H) in. H_2O	Stack Temp (t_s) °F	Meter Temp. (t_m) Inlet °F	Meter Temp. (t_m) Outlet °F	0.7406 Meter Rate cfm	Pump Vacuum in. Hg	Notes (x5)		Probe Temp. °F	Heated Line Filter Holder Temp. °F	Impinger Outlet Temp. °F
1-1	0.48	0.693	801	39.352	0.89	391	46	41	0.513	6	2.566		241	236	≤ 68°F
1-2	0.54	0.735	806	41.860	1.00	397	49	42	0.544	6	2.721	41.918	240	236	Full
1-3	0.59	0.768	811	44.550	1.10	402	53	43	0.569	6	2.844	44.639	236	234	
1-4	0.57	0.755	816	47.370	1.06	407	54	44	0.559	7	2.796	47.483	236	235	
1-5	0.56	0.748	821	50.220	1.04	408	57	45	0.554	7	2.771	50.279	237	235	
		0.7398	826	53.070	1.018	401.9	51.8	43.0				53.050			
2-1	0.55	0.742	830	53.070	1.02	389	54	46	0.549	6	2.746		238	234	
2-2	0.63	0.794	835	55.720	1.17	401	57	47	0.588	7	2.939	55.796	236	234	
2-3	0.66	0.812	840	58.750	1.23	410	58	48	0.602	7	3.008	58.735	236	235	
2-4	0.53	0.728	845	61.770	0.99	413	59	49	0.539	6	2.696	61.743	235	235	
2-5	0.64	0.800	850	64.380	1.19	410	60	50	0.593	7	2.962	64.431	234	236	
		0.7752	855	67.370	1.128	404.6	57.6	48.0				67.401			
3-1	0.49	0.700	858	67.370	0.91	386	59	51	0.518	6	2.592		235	236	
3-2	0.59	0.768	903	69.930	1.10	403	60	51	0.569	7	2.844	69.993	235	236	
3-3	0.63	0.794	908	72.800	1.17	404	61	52	0.588	7	2.939	72.837	234	236	
3-4	0.51	0.714	913	75.770	0.95	412	62	53	0.529	7	2.645	75.776	237	236	
3-5	0.66	0.812	918	78.470	1.23	414	62	55	0.602	7	3.008	78.421	236	236	
		0.7576	923	81.430	1.072	403.8	60.8	52.4				81.429			
4-1	0.43	0.656	926	81.430	0.80	383	61	54	0.486	6	2.428		237	235	
4-2	0.71	0.843	931	83.810	1.32	400	63	54	0.624	7	3.120	83.857	238	237	
4-3	0.77	0.878	936	87.010	1.43	404	64	55	0.650	7	3.249	86.977	238	237	
4-4	0.53	0.728	941	90.170	0.99	405	64	55	0.539	7	2.696	90.226	238	237	
4-5	0.76	0.872	946	92.890	1.41	408	64	56	0.646	7	3.228	92.922	238	236	
		0.7954	951	96.170	1.190	408.2	63.2	54.8				96.150			

FIELD TEST DATA SHEET
FOR ISOKINETIC SAMPLING

MOSTARDI-PLATT ASSOCIATES, IN

PROJECT WEPCO-Port Washington
TEST RUN NO. #1
TEST LOCATION Unit #4 - Outlet

DATE 17Nov99 PAGE 2 OF 2

Port-Point No.	Velocity Head (P) in. H_2O	$\sqrt{P}$	Clock Time 24 hr.	Meter Volume (Vm) ft^3	1.8595 Orifice (H) in. H_2O	Stack Temp (t_s) °F	Meter Temp. (t_m) Inlet °F	Meter Temp. (t_m) Outlet °F	0.7406 Meter Rate cfm	Pump Vacuum in. Hg	x5 Notes		Probe Temp. °F	Heated Line Filter Holder Temp. °F	Impinger Outlet Temp.
5-1	0.42	0.648	954	96.170	0.78	386	63	56	0.480	6	2.400	96.150	237	236	≤68°F
5-2	0.32	0.566	959	98.610	0.60	389	63	56	0.419	5	2.095	98.550	237	236	≤11, ic
5-3	0.30	0.548	1004	100.680	0.56	393	64	57	0.406	5	2.028	100.645	238	236	
5-4	0.29	0.539	1009	102.710	0.54	391	63	57	0.399	5	1.994	102.673	238	236	
5-5	0.57	0.755	1014	104.680	1.06	397	64	57	0.559	6	2.796	104.667	237	236	
		0.6112	1019	107.460	0.708	391.2	63.4	56.6				107.463			
		0.7358		68.108	1.022	400.1	59.4	51.0				68.111			

57

TEST SUPPORT DATA

TEST RUN NO. #2

COMPANY: WEPCO
PLANT: PORT WASHINGTON
TEST LOCATION: UNIT #4 OUTLET
CLIENT:
OPERATOR: D Helm / N. Smith
DATE: 17 Nov 99
CONTROL BOX: E-51 POT. NO.: E-51
METER NO.: E-51
METER CALIBRATION FACTOR: 1.009
PITOT ID NO.: 427A
PITOT TUBE COEFFICIENT: 0.830
PORT LENGTH: 21" in.
PORT SIZE: 6" in.
PORT TYPE: FLANGE

IMPINGER H_2O
FINAL: 4622.2 ml/gm
INITIAL: 4526.2 ml/gm
GAIN: 96.0 ml/gm

SILICA GEL:
FINAL WT: 731.9 gm
INITIAL WT: 717.0 gm
WT. GAIN: 14.9 gm

TOTAL H_2O COLLECTED: 110.9
DESCRIPTION OF IMPINGER H_2O:
SILICA GEL EXHAUSTED?:
IMPINGERS RECOVERED BY:
SILICA GEL WEIGHED BY:

COMMENTS & NOTES

THIMBLE NO: 075 TARE WT: 3.5414
FILTER NO: TARE WT:
BAROMETRIC PRESSURE in. Hg: 29.68
FLUE PRESSURE in. H_2O: -2.1
FLUE PRESSURE in. Hg ABS: 29.53
PROBE LENGTH: 11' ft.
PROBE LINER MATERIAL: TEFLON
NOZZLE IDENTIFICATION NO: #8
CALIBRATED NOZZLE DIAMETER: .245
LEAK CHECK: PRE: POST: @ in. Hg
DUCT SHAPE: RECTANGULAR DIAMETER:
DUCT AREA: 115.56 sq. ft. L 10.75' W 10.75'
DISTURBANCE UPSTREAM: 0.37 DIA DOWNSTREAM: 0.65 DIA.
TEST LENGTH: 125 min
MINUTES PER POINT: 5
TOTAL NUMBER OF TRAVERSE POINTS: 25
GAS ANALYSIS (ORSAT/FYRITE):
CO_2: 13.0
O_2: 6.0

PITOT LEAK CHECK: PRE POST
ΔH@
SAMPLES REMOVED FROM SITE BY:

For computer data entry: Supervisor, please complete.
Do you want to enter a fuel analysis? Y ☐ N ☐
What value do you want to use? F = 9,780 F_c = 1,800 Other =
Circle to indicate "Yes" or add other value if not given.

© Mostardi-Platt Associates, Inc.

FIELD TEST DATA SHEET
FOR ISOKINETIC SAMPLING

MOSTARDI-PLATT ASSOCIATES, IN

PROJECT WEPCO - Port Washington
TEST RUN NO. #2
TEST LOCATION Unit #4 - Outlet

DATE 17 Nov 99 PAGE 1 OF 2

Port-Point No.	Velocity Head (P) in. H_2O	$\sqrt{P}$	Clock Time 24 hr.	Meter Volume (Vm) ft^3	1.8756 Orifice (H) in. H_2O	Stack Temp (t_s) °F	Meter Temp. (t_m) Inlet °F	Meter Temp. (t_m) Outlet °F	0.7474 Meter Rate cfm	Pump Vacuum in. Hg	X5 Notes		Probe Temp. °F	Filter Holder Temp. °F	Imping Outle Temp.
1-1	0.38	0.616	1120	307.890	.713	398	58	57	0.460	5.5	2.302		230	240	≤68°F
1-2	0.53	0.728	1125	310.010	.994	402	61	57	0.544	6.5	2.721	310.192	235	240	Fill
1-3	0.61	0.781	1130	312.600	1.144	409	64	57	0.584	6.5	2.920	312.913	235	242	
1-4	0.61	0.781	1135	315.720	1.144	411	64	57	0.584	6.5	2.920	315.833	240	244	
1-5	0.48	0.693	1140	318.810	.900	412	64	57	0.518	5.5	2.595	318.753	240	242	
		0.7198	1145	321.350	1.0416	406.4	62.2	57.0				321.351			
2-1	0.48	0.693	1150	321.350	.900	395	60	57	0.518	5.5	2.595	—	238	240	
2-2	0.57	0.755	1155	323.920	1.069	401	62	57	0.564	6.0	2.820	323.946	237	239	
2-3	0.58	0.762	1200	326.800	1.088	413	63	57	0.570	6.0	2.850	326.766	237	241	
2-4	0.57	0.755	1205	329.630	1.069	417	63	57	0.564	5.5	2.820	329.616	237	241	
2-5	0.58	0.762	1210	333.270	1.088	416	64	57	0.570	7.5	2.850	333.436	239	240	
		0.7454	1215	336.180	1.0428	408.4	62.4	57.0				336.286			
3-1	0.44	0.663	1220	336.180	.825	389	61	57	0.500	7.5	2.500	—	236	240	
3-2	0.56	0.748	1225	338.750	1.050	404	61	56	0.599	6.0	2.795	338.786	236	239	
3-3	0.56	0.748	1230	341.590	1.050	405	61	56	0.599	6.0	2.795	341.581	238	240	
3-4	0.50	0.707	1235	344.370	0.938	414	61	56	0.528	7.5	2.640	344.376	238	241	
3-5	0.44	0.663	1240	347.00	.825	415	62	56	0.500	5.5	2.500	347.016	239	242	
		0.7058	1245	349.514	0.9376	405.4	61.2	56.2				349.516			
4-1	0.48	0.693	1250	349.514	.900	387	61	56	0.518	6.0	2.595	—	236	237	
4-2	0.64	0.800	1255	352.110	1.200	400	61	56	0.598	7.0	2.990	352.111	237	238	
4-3	0.78	0.883	1300	355.150	1.463	408	62	56	0.660	7.5	3.300	355.101	239	241	
4-4	0.64	0.800	1305	358.480	1.200	409	62	56	0.598	7.0	2.990	358.401	238	242	
4-5	0.74	0.860	1310	361.400	1.388	410	62	56	0.643	7.0	3.215	361.391	239	243	
		0.8072	1315	364.874	1.2302	402.8	61.6	56.0				364.606			

Form 1026 (Rev. 5/27)

FIELD TEST DATA SHEET
FOR ISOKINETIC SAMPLING

MOSTARDI-PLATT ASSOCIATES, INC

PROJECT WEPCO - Port Washington
TEST RUN NO. #2
TEST LOCATION Unit #4 - OUTLET

DATE 17 Nov 99 PAGE 2 OF 2

Port-Point No.	Velocity Head (P) in. H_2O	$\sqrt{P}$	Clock Time 24 hr.	Meter Volume (Vm) ft^3	Orifice (H) in. H_2O	Stack Temp (t_s) °F	Meter Temp. (t_m) Inlet °F	Meter Temp. (t_m) Outlet °F	Meter Rate cfm	Pump Vacuum in. Hg	Notes		Probe Temp. °F	Filter Holder Temp. °F	Impinger Outlet Temp.
		1			1.8756				0.7474		X5	1			
5-1	0.48	0.693	1320	364.874	.900	389	59	55	0.518	6.0	2.590	—	237	237	<68°
5-2	0.27	0.520	1325	367.200	.506	390	59	55	0.389	6.0	1.945	367.196	238	237	FULL
5-3	0.46	0.678	1330	369.400	.863	396	58	55	0.501	6.0	2.535	369.141	238	238	ICE
5-4	0.46	0.678	1335	371.620	.863	395	56	55	0.501	6.5	2.535	371.676	237	239	
5-5	0.56	0.748	1340	374.210	1.050	399	59	55	0.599	5.5	2.795	374.211	237	240	
		0.6634	1345	377.032	0.8364	393.8	58.2	55.0				377.006			
		0.7283		69.142	1.0177	403.4	61.1	56.2				69.116			

MOSTARDI-PLATT ASSOCIATES, INC.

TEST SUPPORT DATA

TEST RUN NO. 3

COMPANY: WEPCO
PLANT: Port Washington
TEST LOCATION: Unit 4 Outlet
CLIENT:
OPERATOR: D. Helm / N. Smith
DATE: 11/17/99
CONTROL BOX: ES1 POT. NO.: ES1
METER NO.: ES1
METER CALIBRATION FACTOR: 1.009
PITOT ID NO.: 427A
PITOT TUBE COEFFICIENT: 0.830
PORT LENGTH: 21 in.
PORT SIZE: 6 in.
PORT TYPE: Flange

IMPINGER H_2O

FINAL: 4828.9 ml/gm
INITIAL: 4730.0 ml/gm
GAIN: 98.9 ml/gm
TOTAL H_2O COLLECTED: 111.9

SILICA GEL:

FINAL WT: 774.1 gm
INITIAL WT: 761.1 gm
WT. GAIN: 13.0 gm

DESCRIPTION OF IMPINGER H_2O:
SILICA GEL EXHAUSTED?:
IMPINGERS RECOVERED BY:
SILICA GEL WEIGHED BY:

COMMENTS & NOTES

THIMBLE NO: 086 TARE WT: 3.5991
FILTER NO: TARE WT:
BAROMETRIC PRESSURE in. Hg: 29.68
FLUE PRESSURE in. H_2O: -2.1
FLUE PRESSURE in. Hg ABS: 29.53
PROBE LENGTH: 11' ft.
PROBE LINER MATERIAL: Teflon
NOZZLE IDENTIFICATION NO: #8
CALIBRATED NOZZLE DIAMETER: .245
LEAK CHECK: PRE: 0.005 POST: @ 10 in. Hg
DUCT SHAPE: Rectangular DIAMETER: —
DUCT AREA: 115.56 sq. ft. L 10.75 W 10.75
DISTURBANCE UPSTREAM: 0.37 Diameter DOWNSTREAM: 0.65 Diameter
TEST LENGTH: 125 min
MINUTES PER POINT: 5
TOTAL NUMBER OF TRAVERSE POINTS: 25
GAS ANALYSIS (ORSAT/FYRITE):
CO_2: 13.0
O_2: 6.0

PITOT LEAK CHECK: PRE POST
ΔH@
SAMPLES REMOVED FROM SITE BY:

For computer data entry: Supervisor, please complete.
Do you want to enter a fuel analysis? Y ☐ N ☐
What value do you want to use? F = 9,780 F_c = 1,800 Other =
Circle to indicate "Yes" or add other value if not given.

© Mostardi-Platt Associates, Inc.

FIELD TEST DATA SHEET
FOR ISOKINETIC SAMPLING

MOSTARDI-PLATT ASSOCIATES, INC

PROJECT WEPCO - Port Washington
TEST RUN NO. 3
TEST LOCATION Unit 4 outlet

DATE 11/17/99 PAGE 1 OF 2

Port-Point No.	Velocity Head (P) in. H_2O	$\sqrt{P}$	Clock Time 24 hr.	Meter Volume (Vm) ft^3	1.8756 Orifice (H) in. H_2O	Stack Temp (t_s) °F	Meter Temp. (t_m) Inlet °F	Meter Temp. (t_m) Outlet °F	0.7474 Meter Rate cfm	Pump Vacuum in. Hg	x5	Notes	Probe Temp. °F	Heated Line ~~Filter~~ Holder Temp. °F	Imping Outle Temp.
1-1	0.42	0.648	1438	77.400	0.79	397	53	53	0.484	5	2.422		238	240	≤68°F
-2	0.52	0.721	1443	79.850	0.98	402	55	53	0.539	6	2.695	79.822	238	240	fully ice
-3	0.60	0.775	1448	82.570	1.13	408	56	54	0.579	6	2.895	82.517	237	241	
-4	0.59	0.768	1453	85.440	1.11	412	60	53	0.574	6	2.870	85.412	238	239	
-5	0.50	0.707	1458	88.320	0.94	413	59	53	0.529	6	2.643	88.282	238	240	
		0.724	1503	90.940	0.990	406.4	56.6	53.2				90.925			
2-1	0.49	0.700	1506	90.940	0.92	396	59	53	0.523	5	2.616		239	239	
-2	0.55	0.742	1511	93.500	1.03	404	60	54	0.554	6	2.771	93.541	239	240	
-3	0.56	0.748	1516	96.280	1.05	414	60	54	0.559	6	2.797	96.312	238	240	
-4	0.54	0.735	1521	99.160	1.01	418	62	55	0.549	6	2.746	99.109	238	241	
-5	0.60	0.775	1526	102.010	1.13	415	62	55	0.579	6	2.895	101.855	239	240	
		0.740	1531	104.740	1.028	409.4	60.6	54.2				104.750			
3-1	0.49	0.700	1533	104.740	0.92	389	60	55	0.523	6	2.616		237	238	
-2	0.50	0.707	1538	107.310	0.94	405	61	55	0.529	6	2.643	107.366	238	239	
-3	0.58	0.762	1543	110.050	1.09	414	62	55	0.569	6	2.846	110.009	238	238	
-4	0.53	0.728	1548	112.880	0.99	416	62	55	0.544	6	2.721	112.855	238	238	
-5	0.64	0.800	1553	115.520	1.20	417	62	55	0.598	6	2.990	115.576	237	239	
		0.739	1558	118.580	1.028	408.2	61.4	55.0				118.566			
4-1	0.46	0.678	1601	118.580	0.86	389	61	55	0.507	6	2.535		235	238	
-2	0.69	0.831	1606	121.190	1.29	402	62	55	0.621	6	3.104	121.101	235	239	
-3	0.76	0.872	1611	124.170	1.43	407	64	55	0.652	7	3.258	124.205	236	239	
-4	0.61	0.781	1616	127.490	1.14	409	64	56	0.584	7	2.919	127.463	235	237	
-5	0.69	0.831	1621	130.390	1.29	411	64	56	0.621	7	3.104	130.382	234	237	
		0.799	1626	133.470	1.202	403.6	63.0	55.4				133.486			

FIELD TEST DATA SHEET
FOR ISOKINETIC SAMPLING

MOSTARDI-PLATT ASSOCIATES, IN

PROJECT WEPCO - Port Washington
TEST RUN NO. 3
TEST LOCATION Unit 4 Outlet

DATE 11/17/99 PAGE 2 OF 2

Port-Point No.	Velocity Head (P) in. H_2O	$\sqrt{P}$	Clock Time 24 hr.	Meter Volume (Vm) ft^3	1.8756 Orifice (H) in. H_2O	Stack Temp (t_s) °F	Meter Temp. (t_m) Inlet °F	Meter Temp. (t_m) Outlet °F	0.7474 Meter Rate cfm	Pump Vacuum in. Hg	x5 Notes		Probe Temp. °F	Heated Line ~~Filter Holder~~ Temp. °F	Imping Outle Temp.
5-1	0.55	0.742	1628	133.470	1.03	389	64	56	0.554	6	2.771	133.486	234	236	≤68°F
-2	0.37	0.608	1633	136.220	0.69	392	63	56	0.455	5	2.273	136.257	235	236	fully
-3	0.24	0.490	1638	138.600	0.45	395	62	56	0.366	5	1.831	138.530	235	236	
-4	0.30	0.548	1643	140.390	0.56	394	62	56	0.409	5	2.047	140.361	234	235	
-5	0.62	0.787	1648	142.450	1.16	399	62	56	0.589	6	2.943	142.408	234	236	
		0.635	1653	145.380	0.778	393.8	62.6	56.0				145.351			
		0.7274		67.980	1.0052	404.3	60.8	54.8				67.951			

Form 1026 JP 5/27

PITOT TRAVERSE DATA

Project: WEPCO - Port Washington

Location: Unit 4 Outlet

Date: 11/16/99 Test No: 1 Time: 908-951

Point No.	ΔP	√ΔP	t_s	α	Point No.	ΔP	√ΔP	t_s	α
1-1	0.53		395	5°	5-1	0.51		385	10°
-2	0.54		397	0°	-2	0.61		389	10°
-3	0.60		400	5°	-3	0.53		393	5°
-4	0.60		404	5°	-4	0.57		393	10°
-5	0.55		407	0°	-5	0.60		393	0°
							0.7686	398.9	7.2°
2-1	0.60		394	15°					
-2	0.53		396	5°					
-3	0.65		405	10°					
-4	0.61		412	10°					
-5	0.62		412	5°					
		7.6379							
3-1	0.62		387	10°					
-2	0.44		394	5°					
-3	0.54		405	10°					
-4	0.54		410	5°					
-5	0.61		411	10°					
4-1	0.58		386	15°					
-2	0.55		391	10°					
-3	0.77		403	5°					
-4	0.75		405	0°					
-5	0.78		406	15°					

P_{bar} 29.65 "Hg Static -2.1 "H_2O P_g -0.154 "Hg P_s 29.50 "Hg Pitot ID 535A C_p 0.836 Temp. ID E51

0.44 × 13.0 $\%CO_2$ = 5.72 √ΔP 0.7686 t_s 398.9 °F T 858.9 °R Flue Area 115.56 ft^2

0.32 × 6.0 $\%O_2$ = + 1.92 Duct Dimensions 10.75' × 10.75'

0.28 × 81.0 $\%N_2$ = + 22.68 B_{ws} 0.10 1 - B_{ws} 0.90 Disturbance: Upstream _____

(30.32 Md × 0.90 1-B_{ws}) + (18 × 0.10 B_{ws}) = 29.088 (Ms) Downstream _____

$$v_s = 85.49 \times 0.836\ Cp \times \sqrt{\frac{(858.9)\ Ts\ °R}{29.088\ Ms \times 29.50\ Ps}} \times 0.7686 \sqrt{\Delta P} = 54.958\ ft/sec\ (Vs)$$

Q_{acfm} = 54.958 Vs × 115.56 Flue Area × 60 = 381,056 acfm Port Length 21 Inches

$$Q_{dscfm} = 17.647 \times ACFM \times \frac{Ps}{Ts\ °R} = 230,961\ SCFM$$

$$Q_{dscfm} = 17.647 \times ACFM \times \frac{Ps}{Ts\ °R} \times (1\text{-}Bws) = 207,865\ DSCFM$$

Pre-test leak check ✓ "H_2O

Post-test leak check ✓ "H_2O

Data Taken By: DH/NS, CS.

Field Engineer / Test Technician

0.783

©Mostardi-Platt Associates Inc

CALIBRATION PROCEDURES

PITOT TUBES

The pitot tubes used during this test program are fabricated according to the specification described and illustrated in the *Code of Federal Regulations*, Title 40, Part 60, Appendix A, Methods 1 through 5 as published in the *Federal Register*, Volume 42, No. 160; hereafter referred to by the appropriate method number. The pitot tubes comply with the alignment specifications in Method 2, Section 4; and the pitot tube assemblies are in compliance with specifications in the same section.

Pitot tube assemblies are calibrated in accordance with Method 2, Section 4, against a standard hemispherical pitot utilizing a wind tunnel meeting the specification in Method 2, Section 4.1.2.

NOZZLES

The nozzles are measured according to Method 5, Section 5.1.

TEMPERATURE SENSING DEVICES

The potentiometer and thermocouples are calibrated against a mercury thermometer in a calibration well. Alternatively, readings are checked utilizing a NBS traceable millivolt source.

DRY GAS METERS

The test meters are calibrated according to Method 5, Section 5.3 and "Procedures for Calibrating and Using Dry Gas Volume Meters as Calibration Standards" by P.R. Westlin and R.T. Shigehara, March 10, 1978.

ANALYTICAL BALANCE

The accuracy of the analytical balance is checked with Class S, Stainless Steel Type 303 weights manufactured by F. Hopken and Son, Jersey City, New Jersey.

© Mostardi-Platt Associates, Inc.

Nozzle Calibration

Date: 11/16/99

Nozzle ID No.: Set #1 - Nozzle 3

Analyst: JRP

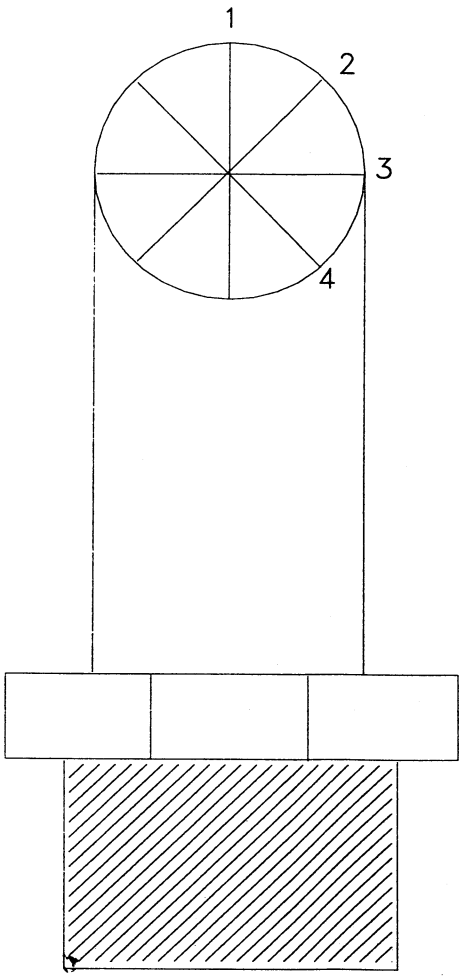

Pre Test		Post Test
0.311	1	√
0.310	2	√
0.311	3	√
0.311	4	√

Average
0.311

© Mostardi-Platt Associates, Inc.

Nozzle Calibration

Date: 11/16/99

Nozzle ID No.: Set #1 - Nozzle 8

Analyst: JRP

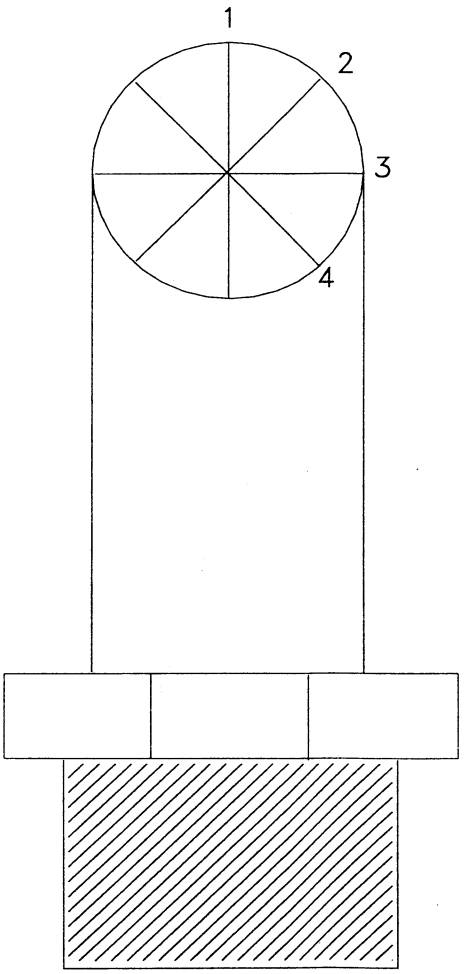

Pre Test		Post Test
0.244	1	√
0.244	2	√
0.245	3	√
0.245	4	√

Average
0.245

© Mostardi-Platt Associates, Inc.

Pitot Tube Calibration Data

Calibration Pitot Tube: Type: Std. Hemi Size (OD): 0.25 Pitot ID #: N/A

Type "S" Pitot Tube ID Numbe 256 A & B Cp(std) = 0.99

Calibration Date: 1/9/95 Performed By: T. Krull

P_{std}, (in.) H_2O		A-Side Calibration		
Set Value	**Read Value**	**P_s, (in.) H_2O**	**$C_{p(S)}$ [a]**	**DEV.[b]**
0.25	0.25	0.36	0.825	0.005
0.55	0.57	0.82	0.822	0.009
0.85	0.82	1.15	0.836	0.006
1.00	1.10	1.55	0.834	0.004
2.00	2.40	3.40	0.832	0.001
3.00	3.30	4.65	0.834	0.004
		Average	0.830	0.005

P_{std}, (in.) H_2O		B-Side Calibration		
Set Value	**Read Value**	**P_s, (in.) H_2O**	**$C_{p(S)}$ [a]**	**DEV.[b]**
0.25	0.25	0.36	0.831	0.000
0.55	0.56	0.80	0.828	0.003
0.85	0.83	1.20	0.823	0.008
1.00	1.10	1.55	0.834	0.003
2.00	2.40	3.40	0.832	0.001
3.00	3.30	4.60	0.839	0.007
		Average	0.831	0.004

$\overline{C_p}(A) - \overline{C_p}(B) =$ 0.001 (must be ≤ 0.01)

[a] $C_{p(S)} = C_{p(std)}\sqrt{\frac{\Delta P_{std}}{\Delta P_s}}$

[b] $DEV = C_{p(S)} - \overline{C_p}$, (must be ≤ 0.01)

Pitot Tube Calibration Data

Calibration Pitot Tube: Type: HEMI STD Size (OD): 1/4" Pitot ID #: 16018

Type "S" Pitot Tube ID Numbe 427 (1/4") Cp(std) = 0.99

Calibration Date: 12/4/1997 Performed By: M. McIntyre

P_{std}, (in.) H_2O		A-Side Calibration		
Set Value	**Read Value**	**P_s, (in.) H_2O**	**$C_{p(S)}$ [a]**	**DEV. [b]**
0.25	0.27	0.39	0.829	0.001
0.55	0.55	0.78	0.830	0.000
0.85	0.85	1.20	0.831	0.001
1.00	1.05	1.50	0.828	0.002
2.00	2.00	2.85	0.829	0.001
3.00	3.00	4.25	0.832	0.002
		Average	0.830	0.001

P_{std}, (in.) H_2O		B-Side Calibration		
Set Value	**Read Value**	**P_s, (in.) H_2O**	**$C_{p(S)}$ [a]**	**DEV. [b]**
0.25	0.26	0.37	0.830	0.001
0.55	0.55	0.78	0.830	0.001
0.85	0.85	1.20	0.831	0.001
1.00	1.05	1.50	0.828	0.003
2.00	2.00	2.80	0.837	0.005
3.00	3.00	4.25	0.832	0.000
		Average	0.831	0.002

$\overline{C_p}(A) - \overline{C_p}(B) =$ 0.001 (must be ≤ 0.01)

[a] $C_{p(S)} = C_{p(std)}\sqrt{\frac{\Delta P_{std}}{\Delta P_s}}$

[b] $DEV = C_{p(S)} - \overline{C_p}$, (must be ≤ 0.01)

STACK TEMPERATURE SENSOR CALIBRATION DATA FORM (FOR K-TYPE THERMOCOUPLES)

EPA Control Module Number: E12 Name: Rich Russ

Ambient Temperatu 63 °F Date: 11-12-99

Model 1061; S/N: A20821 Reference Source (T/C Calibrator): Transmation, Inc.

Date of Calibration Verification: 10/18/94

Primary Standards Directly Traceable to
National Institute of Standards and Technology (NIST)

Reference[a] Source Temperature, (°F)	Test Thermometer Temperature, (°F)	Temperature Difference,[b] %
50	49	0.196
100	99	0.179
150	149	0.164
200	199	0.152
250	249	0.141
300	300	0.000
350	350	0.000
400	400	0.000
450	450	0.000
500	500	0.000
550	550	0.000
600	600	0.000
650	650	0.000
700	700	0.000
800	800	0.000
900	900	0.000
1000	1000	0.000
1100	1100	0.000
1200	1200	0.000

[a]Every (50°F) for each reference point.

$$\frac{(\text{Ref. Temp., °F} + 460) - (\text{Test Therm. Temp., °F} + 460)}{\text{Ref. Temp., °F} + 460} * 100 <= 1.5\ \%$$

STACK TEMPERATURE SENSOR CALIBRATION DATA FORM (FOR K-TYPE THERMOCOUPLES)

EPA Control Module Number: E12 Name: Rich Russ

Ambient Temperatu 68 °F Date: 12-09-99

Model 1061; S/N: A20821 Reference Source (T/C Calibrator): Transmation, Inc.

Date of Calibration Verification: 10/18/94

Primary Standards Directly Traceable to
National Institute of Standards and Technology (NIST)

Reference[a] Source Temperature, (°F)	Test Thermometer Temperature, (°F)	Temperature Difference,[b] %
50	50	0.000
100	100	0.000
150	150	0.000
200	200	0.000
250	250	0.000
300	300	0.000
350	350	0.000
400	400	0.000
450	450	0.000
500	500	0.000
550	550	0.000
600	600	0.000
650	650	0.000
700	700	0.000
800	800	0.000
900	900	0.000
1000	1000	0.000
1100	1101	0.064
1200	1201	0.060

[a]Every (50°F) for each reference point.

$$\frac{(\text{Ref. Temp., °F} + 460) - (\text{Test Therm. Temp., °F} + 460)}{\text{Ref. Temp., °F} + 460} * 100 <= 1.5\ \%$$

STACK TEMPERATURE SENSOR CALIBRATION DATA FORM (FOR K-TYPE THERMOCOUPLES)

EPA Control Module Number: E51 Name: Rich Russ

Ambient Temperatu 67 °F Date: 11-03-99

Model 1061; S/N: A20821 Reference Source (T/C Calibrator): Transmation, Inc.

Date of Calibration Verification: 10/18/94

Primary Standards Directly Traceable to
National Institute of Standards and Technology (NIST)

Reference[a] Source Temperature, (°F)	Test Thermometer Temperature, (°F)	Temperature Difference,[b] %
50	51	0.196
100	101	0.179
150	151	0.164
200	201	0.152
250	251	0.141
300	300	0.000
350	350	0.000
400	400	0.000
450	450	0.000
500	500	0.000
550	550	0.000
600	600	0.000
650	650	0.000
700	700	0.000
800	800	0.000
900	900	0.000
1000	1000	0.000
1100	1100	0.000
1200	1200	0.000

[a]Every (50°F) for each reference point.

$$\frac{(\text{Ref. Temp., °F} + 460) - (\text{Test Therm. Temp., °F} + 460)}{\text{Ref. Temp., °F} + 460} * 100 <= 1.5\ \%$$

STACK TEMPERATURE SENSOR CALIBRATION DATA FORM (FOR K-TYPE THERMOCOUPLES)

EPA Control Module Number: E51 Name: Rich Russ

Ambient Temperatu 67 °F Date: 12-08-99

Model 1061; S/N: A20821 Reference Source (T/C Calibrator): Transmation, Inc.

Date of Calibration Verification: 10/18/94

Primary Standards Directly Traceable to
National Institute of Standards and Technology (NIST)

Reference[a] Source Temperature, (°F)	Test Thermometer Temperature, (°F)	Temperature Difference,[b] %
50	51	0.196
100	101	0.179
150	151	0.164
200	201	0.152
250	251	0.141
300	301	0.132
350	351	0.123
400	401	0.116
450	451	0.110
500	501	0.104
550	551	0.099
600	601	0.094
650	650	0.000
700	700	0.000
800	800	0.000
900	900	0.000
1000	1000	0.000
1100	1100	0.000
1200	1200	0.000

[a]Every (50°F) for each reference point.

$$\frac{(\text{Ref. Temp., °F} + 460) - (\text{Test Therm. Temp., °F} + 460)}{\text{Ref. Temp., °F} + 460} * 100 <= 1.5\ \%$$

METER BOX CALIBRATION

Dry Gas Meter No.	E12	Date:	11-12-99
Standard Meter No.	3623851	Calibrated By:	Rich Russ
Standard Meter (Yr)	1.0063	Barometric Pressure :	29.64

Formula Protection Password: MPA

Run Number		Orifice Setting in H20 Chg (H)	Standard Meter Gas Volume Vr	Dry Meter Gas Volume Vd	Standard Meter Temp. F tr	Dry Gas Meter Inlet Temp. F tdi	Dry Gas Meter Outlet Temp. F tdo	Dry Gas Meter Avg. Temp. F td	Time Min.	Time Sec.	Y	Chg (H@)
Final			37.364	27.363	66	66	64					
Inital			32.330	22.311	66	68	65					
Difference	1	0.20	5.034	5.052	66	67	64.5	65.75	18	35	0.995	1.533
Final			42.574	32.608	66	67	64					
Inital			37.513	27.508	66	66	64					
Difference	2	0.50	5.061	5.100	66	66.5	64	65.25	12	12	0.990	1.636
Final			26.366	16.331	66	70	65					
Inital			21.317	11.249	66	68	64					
Difference	3	0.70	5.049	5.082	66	69	64.5	66.75	10	21	0.993	1.651
Final			48.141	38.198	67	71	65					
Inital			42.813	32.850	66	67	64					
Difference	4	0.90	5.328	5.348	66.5	84	64.5	74.25	9	32	1.009	1.598
Final			53.436	43.510	68	74	66					
Inital			48.323	38.378	67	70	65					
Difference	5	1.20	5.113	5.132	67.5	72	65.5	68.75	8	3	0.996	1.673
Final			31.899	21.853	66	72	65					
Inital			26.766	16.721	66	69	65					
Difference	6	2.00	5.133	5.132	66	70.5	65	67.75	6	17	0.999	1.679
									Average		0.997	1.628

©MOSTARDI-PLATT ASSOCIATES, INC.

METER BOX CALIBRATION

Dry Gas Meter No.	E12	Date:	12-09-99
Standard Meter No.	677191	Calibrated By:	Rich Russ
Standard Meter (Yr)	0.9991	Barometric Pressure :	30.04

Formula Protection Password: MPA

Run Number		Orifice Setting in H20 Chg (H)	Standard Meter Gas Volume Vr	Dry Meter Gas Volume Vd	Standard Meter Temp. F tr	Dry Gas Meter Inlet Temp. F tdi	Dry Gas Meter Outlet Temp. F tdo	Dry Gas Meter Avg. Temp. F td	Time Min.	Time Sec.	Y	Chg (H@)
Final			55.361	70.756	68	71	70					
Inital			50.319	65.714	68	72	71					
Difference	1	0.20	5.042	5.042	68	71.5	70.5	71	18	50	1.005	1.545
Final			60.549	75.956	69	73	70					
Inital			55.535	70.935	68	71	70					
Difference	2	0.50	5.014	5.021	68.5	72	70	71	12	2	1.002	1.598
Final			50.172	65.559	68	73	71					
Inital			45.160	60.505	68	72	71					
Difference	3	0.70	5.012	5.054	68	72.5	71	71.75	10	18	0.997	1.635
Final			65.851	81.242	69	75	71					
Inital			60.835	76.229	69	73	70					
Difference	4	0.90	5.016	5.013	69	84	70.5	77.25	8	59	1.014	1.586
Final			71.165	86.550	70	76	71					
Inital			66.126	81.512	69	74	70					
Difference	5	1.20	5.039	5.038	69.5	75	70.5	72.75	7	52	1.003	1.623
Final			100.217	15.607	68	76	70					
Inital			95.187	10.579	68	77	70					
Difference	6	2.00	5.030	5.028	68	76.5	70	73.25	6	11	1.005	1.666
									Average		1.005	1.609

75

VOLUME METERING SYSTEM FIELD AUDIT

Date: 11-12-99 Name: Rich Russ

EPA Control Module No.: E12 Ambient Temperature: 68 °F

Calibration (Y): 0.997 Barometric Pressure: 29.64 "Hg

Delta H: 1.628

#VALUE!

Run No.	Time (Minutes)	Gas Meter Reading/Gas Meter Temperature (Cubic Feet)	Inlet (°F)	Outlet (°F)	Yc (Calculated)
1	0	48.680	75	67	0.999
	10	56.257	78	69	
	Vm=	7.577	Avg.= 72.25	532.25	
2	0	56.257	78	69	1.002
	10	63.824	79	70	
	Vm=	7.567	Avg.= 74.00	534.00	
3	0	63.824	79	70	1.006
	10	71.365	80	71	
	Vm=	7.541	Avg.= 75.00	535.00	

$$Yc = \frac{10}{Vm}\sqrt{\frac{Pbar}{0.0319Tm}}$$

Limit: 0.97Y <Yc< 1.03Y

Limit: 0.967 <Yc< 1.027

$$\text{Calc. Delta H @} = \frac{0.0319\ (\text{Delta H})(Tm)(100)}{Pbar(Y^2)(Vm^2)}$$ (From Calibration Data) = 1.909

METER BOX CALIBRATION

Dry Gas Meter No.	E51	Date:	11-03-99
Standard Meter No.	3623851	Calibrated By:	Rich Russ
Standard Meter (Yr)	1.0063	Barometric Pressure :	29.38

Formula Protection Password: MPA

Run Number		Orifice Setting in H20 Chg (H)	Standard Meter Gas Volume Vr	Dry Meter Gas Volume Vd	Standard Meter Temp. F tr	Dry Gas Meter Inlet Temp. F tdi	Dry Gas Meter Outlet Temp. F tdo	Dry Gas Meter Avg. Temp. F td	Time Min.	Time Sec.	Y	Chg (H@)
Final			79.160	85.107	67	72	70					
Inital			74.125	80.070	67	70	69					
Difference	1	0.20	5.035	5.037	67	71	69.5	70.25	19	31	1.005	1.697
Final			91.537	97.454	67	77	70					
Inital			85.621	91.519	67	76	70					
Difference	2	0.50	5.916	5.935	67	76.5	70	73.25	14	52	1.007	1.773
Final			73.972	79.915	66	73	69					
Inital			68.946	74.879	66	70	69					
Difference	3	0.70	5.026	5.036	66	71.5	69	70.25	10	50	1.004	1.830
Final			98.281	104.170	67	74	69					
Inital			92.351	98.271	67	72	69					
Difference	4	0.90	5.930	5.899	67	73	69	71	11	22	1.011	1.865
Final			104.915	10.738	67	75	69					
Inital			98.435	4.338	67	72	69					
Difference	5	1.20	6.480	6.400	67	73.5	69	71.25	10	42	1.018	1.844
Final			85.266	91.184	67	79	70					
Inital			79.545	85.488	67	72	70					
Difference	6	2.00	5.721	5.696	67	75.5	70	72.75	7	23	1.010	1.872
									Average		1.009	1.814

METER BOX CALIBRATION

Dry Gas Meter No.	E51	Date:	12-08-99
Standard Meter No.	3623851	Calibrated By:	Rich Russ
Standard Meter (Yr)	1.0063	Barometric Pressure :	29.53

Formula Protection Password: MPA

Run Number		Orifice Setting in H20 Chg (H)	Standard Meter Gas Volume Vr	Dry Meter Gas Volume Vd	Standard Meter Temp. F tr	Dry Gas Meter Inlet Temp. F tdi	Dry Gas Meter Outlet Temp. F tdo	Dry Gas Meter Avg. Temp. F td	Time Min.	Time Sec.	Y	Chg (H@)
Final			65.880	34.702	65	73	70					
Inital			60.875	29.615	65	74	70					
Difference	1	0.20	5.005	5.087	65	73.5	70	71.75	19	33	0.996	1.697
Final			71.201	40.097	65	75	70					
Inital			66.035	34.850	65	72	70					
Difference	2	0.50	5.166	5.247	65	73.5	70	71.75	13	7	0.996	1.792
Final			60.742	29.484	65	76	70					
Inital			55.724	24.446	64	74	69					
Difference	3	0.70	5.018	5.038	64.5	75	69.5	72.25	10	54	1.009	1.831
Final			76.537	45.474	65	78	70					
Inital			71.519	40.405	65	75	70					
Difference	4	0.90	5.018	5.069	65	76.5	70	73.25	9	44	1.003	1.878
Final			81.757	50.730	65	79	71					
Inital			76.744	45.692	65	77	70					
Difference	5	1.20	5.013	5.038	65	78	70.5	74.25	8	18	1.010	1.821
Final			87.073	56.096	65	82	71					
Inital			82.020	51.002	65	77	70					
Difference	6	2.00	5.053	5.094	65	79.5	70.5	75	6	37	1.006	1.895
									Average		1.003	1.819

78

VOLUME METERING SYSTEM FIELD AUDIT

Date: 11-03-99 Name: Rich Russ

EPA Control Module No.: E51 Ambient Temperature: 69 °F

Calibration (Y): 1.009 Barometric Pressure: 29.38 "Hg

Delta H: 1.814

un N 32	Time (Minutes)	Gas Meter Reading/Gas Meter Temperature (Cubic Feet)	Inlet (°F)	Outlet (°F)	Yc (Calculated)
1	0	16.740	72	68	1.019
	10	24.189	75	68	
	Vm=	7.449	Avg.= 70.75	530.75	
2	0	24.189	74	68	1.026
	10	31.596	77	68	
	Vm=	7.407	Avg.= 71.75	531.75	
3	0	31.596	76	68	1.018
	10	39.061	77	68	
	Vm=	7.465	Avg.= 72.25	532.25	

$$Yc = \frac{10}{Vm}\sqrt{\frac{Pbar}{0.0319Tm}}$$

Limit: 0.97Y <Yc< 1.03Y

Limit: 0.979 <Yc< 1.039

$$\text{Calc. Delta H @} = \frac{0.0319\,(\text{Delta H})(Tm)(100)}{Pbar(Y^2)(Vm^2)}$$ (From Calibration Data) = 1.945

ONTARIO HYDRO METHOD TEST SUPPORT DATA

PROJECT NO.:	94606	**TEST RUN NO.:**	1	**TEST DATE:**	11/17/99

CUSTOMER:	Wisconsin Electric Power Company	**BAROMETRIC PRESSURE (Pb)**	29.68	**in. Hg.**	
PLANT:	Port Washington Power Plant	**STATIC PRESSURE**	-4.5	**in. H2O**	
TEST LOC.:	Unit 4 Air Heater Inlet	**FLUE PRESSURE (Ps)**	29.35	**in. Hg. abs.**	
CLIENT:	Electric Power Research Institute	**PROBE LENGTH:**	5	**ft.**	
OPERATOR:	J. Platt	**PROBE LINER MATERIAL:**	Glass		
CONTROL BOX:	E-12	**NOZZLE IDENTIFICATION NO.:**	Set #1/Nozzle #3		
METER NO.:	E-12	**CALIBRATED NOZZLE DIAMETER:**	0.311	**in.**	
METER CALIBRATION FACTOR:	0.997	**LEAK CHECK** **PRE:**	0.000	**POST:**	0.000 @ 19 in. Hg.
PITOT ID NO.:	256B	**DUCT SHAPE:**	Circular DIA.		Feet
			Rectangular	5 Feet	70 Feet
PITOT TUBE COEFFICIENT:	0.831	**DUCT AREA:**	350	**sq. ft.**	
PORT LENGTH:	10.5 in.	**TEST LENGTH:**	120	**min.**	
PORT SIZE:	4 in.	**MINUTES PER POINT:**	20		
PORT TYPE:	Coupling	**TOTAL NUMBER OF TRAVERSE POINTS:**	6		

80

ONTARIO HYDRO METHOD TRAVERSE DATA

Company: Wisconsin Electric Power Company **Date:** 11/17/99 **Test Ru** 1

Location: Unit 4 Air Heater Inlet

Point	Δp	Sq. Root Δp	Time	Volume cubic feet	ΔH	Stack Temp °F	Meter Inlet °F	Meter Outlet °F	Vacuum in. Hg	
1-1	0.15	0.387	8:00	73.90	0.48	760	84	84	4	2.100
1-1	0.15	0.387	8:05	76.00	0.48	760	84	84	4	2.200
1-1	0.15	0.387	8:10	78.20	0.48	759	85	84	4	2.100
1-1	0.15	0.387	8:15	80.30	0.48	759	86	84	4	1.950
1-2	0.18	0.424	8:20	82.25	0.59	757	88	85	4	2.250
1-2	0.18	0.424	8:25	84.50	0.59	755	88	85	4	2.250
1-2	0.18	0.424	8:30	86.75	0.59	755	89	86	4	2.250
1-2	0.18	0.424	8:35	89.00	0.59	757	90	87	4	2.350
1-3	0.24	0.490	8:40	91.35	0.77	756	91	87	8	2.650
1-3	0.24	0.490	8:45	94.00	0.77	756	92	88	8	2.800
1-3	0.24	0.490	8:50	96.80	0.77	756	93	88	8	2.700
1-3	0.24	0.490	8:55	99.50	0.77	756	93	89	8	2.650
			9:00	102.15						0.000
2-1	0.12	0.346	9:14	102.20	0.38	764	91	90	8	1.130
2-1	0.12	0.346	9:19	103.33	0.38	764	91	90	8	3.720
2-1	0.12	0.346	9:24	107.05	0.38	764	92	90	8	1.950
2-1	0.12	0.346	9:29	109.00	0.38	763	94	91	8	1.800
2-2	0.19	0.436	9:34	110.80	0.62	759	95	92	6	2.400
2-2	0.19	0.436	9:39	113.20	0.62	759	96	92	6	2.400
2-2	0.19	0.436	9:44	115.60	0.62	759	97	93	6	2.400
2-2	0.19	0.436	9:49	118.00	0.62	758	97	94	6	2.350
2-3	0.21	0.458	9:54	120.35	0.68	758	97	93	7.5	2.500
2-3	0.21	0.458	9:59	122.85	0.68	759	97	94	7.5	2.500
2-3	0.21	0.458	10:04	125.35	0.68	759	97	94	7.5	2.580
2-3	0.21	0.458	10:09	127.93	0.68	760	97	94	7.5	2.420
			10:14	130.35						0.000
										0.000
										0.000
										0.000
										0.000
										0.000
										0.000
										0.000
										0.000
										0.000
										0.000
										0.000
										0.000
		0.424		56.400	0.59	759	92	89		#####
							90.46			

MOISTURE, DILUENT AND MERCURY DATA

Company Wisconsin Electric Power Compa **Date:** 11/17/99 **Test Run:** 1

Location: Unit 4 Air Heater Inlet

SILICA GEL FINAL WT.:	812.90	**grams**
SILICA GEL INITIAL WT.:	796.60	**grams**
DIFFERENCE:	16.30	
FINAL IMPINGER WATER:	4863.40	**mls.**
INITIAL IMPINGER WATER:	4789.10	**mls.**
DIFFERENCE:	74.30	
TOTAL WATER GAIN:	90.60	

ITEM	MERCURY (UG)		= NET WT. (G)
FILTER:	0.000		0.000000000
PROBE WASH:	0.000		0.000000000
		Particle-bound Total:	0.000000000
KCl:	6.098		0.000006098
		Oxidized Total:	0.000006098
HNO_3/H_2O_2:	2.380		0.000002380
$KMNO_4$:	13.994		0.000013994
		Elemental Total:	0.000016374

Orsat Analysis	1	2	3	Average
Carbon Dioxide:	14.20	14.20	14.20	14.20
Oxygen:	4.30	4.30	4.30	4.30

ONTARIO HYDRO METHOD DATA ENTRY FORM

Field Data/Calculated Data

Company:	**Wisconsin Electric Power Company**
Date:	11/17/99
Test Run:	1
Stack or Duct No.:	Unit 4 Air Heater Inlet
Start Time:	8:00
Stop Time:	10:14

Pb:	29.68	Inches Hg
Static	-4.50	Inches H2O
Ps:	29.35	Inches Hg Abs.
Vlc:	91	ml + grams
Mn:	0.0000	gm
Test Time:	120	minutes
% O2:	4.30	%
% CO2:	14.20	%
% N2:	81.50	%
Delta H:	0.59	Inches H20
Cp:	0.831	Dimensionless - pitot
Tm:	90.46	°F
Sqrt P:	0.424	Inches H20
Ts:	758.83	°F
Vm:	56.400	Cubic Feet
Dn:	0.311	Inches - nozzle
As:	350.00	Sq. Feet
Yd:	0.997	Mcf
CF:	N/A	Process tons/hr
Heat Input:	N/A	MM BTU/hr
Fd:	N/A	dscf/10^6 Btu
Fc:	N/A	scf/10^6 Btu

Vmstd:	53.582	cubic feet (dry)
Vwstd:	4.267	cubic feet (wet)
Bwo:	0.074	
Md:	30.444	lb/lb-mole (dry)
Ms:	29.526	lb/lb-mole (wet)
Excess Air (%)	24.977	
Vs:	35.696	fps
ACFM:	749609.	
DSCFM:	295038.	
WSCFM:	318535	
%I:	100.5	isokinetic variance
GR/ACF:	---	
GR/DSCF:	---	
lbs/hr	---	
lbs/ton prod.:	N/A	
lbs/MM BTU:	N/A	Heat Input
lbs/MM BTU:	N/A	O2 Basis
lbs/MM BTU:	N/A	CO2 Basis

ONTARIO HYDRO METHOD TEST SUPPORT DATA

PROJECT NO.:	94606	**TEST RUN NO.:**	2	**TEST DATE:**	11/17/99

CUSTOMER:	Wisconsin Electric Power Company	**BAROMETRIC PRESSURE (Pb)**	29.68	**in. Hg.**	
PLANT:	Port Washington Power Plant	**STATIC PRESSURE**	-4.7	**in. H2O**	
TEST LOC.:	Unit 4 Air Heater Inlet	**FLUE PRESSURE (Ps)**	29.33	**in. Hg. abs.**	
CLIENT:	Electric Power Research Institute	**PROBE LENGTH:**	5	**ft.**	
OPERATOR:	J. Platt	**PROBE LINER MATERIAL:**	Glass		
CONTROL BOX:	E-12	**NOZZLE IDENTIFICATION NO.:**	Set #1/Nozzle #3		
METER NO.:	E-12	**CALIBRATED NOZZLE DIAMETER:**	0.311	**in.**	
METER CALIBRATION FACTOR:	0.997	**LEAK CHECK** **PRE:**	0.000	**POST:**	0.000 @ 16 in. Hg.
PITOT ID NO.:	256B	**DUCT SHAPE:**	Circular DIA.		Feet
			Rectangular	5 Feet	70 Feet
PITOT TUBE COEFFICIENT:	0.831	**DUCT AREA:**	350	**sq. ft.**	
PORT LENGTH:	10.5 in.	**TEST LENGTH:**	60	**min.**	
PORT SIZE:	4 in.	**MINUTES PER POINT:**	10		
PORT TYPE:	Coupling	**TOTAL NUMBER OF TRAVERSE POINTS:**	6		

ONTARIO HYDRO METHOD TRAVERSE DATA

Company: Wisconsin Electric Power Company **Date:** 11/17/99 **Test Ru** 2

Location: Unit 4 Air Heater Inlet

Point	Δp	Sq. Root Δp	Time	Volume cubic feet	ΔH	Stack Temp °F	Meter Inlet °F	Meter Outlet °F	Vacuum in. Hg	
2-1	0.11	0.332	11:10	30.03	0.36	766	92	92	4	1.970
2-1	0.11	0.332	11:15	32.00	0.36	766	91	92	4	1.750
2-1	0.11	0.332	11:20	33.75	0.36	766	91	91	4	2.000
2-1	0.11	0.332	11:25	35.75	0.36	765	91	91	4	1.450
2-2	0.18	0.424	11:30	37.20	0.59	765	91	90	4	2.450
2-2	0.18	0.424	11:35	39.65	0.59	764	92	90	5	2.300
2-2	0.18	0.424	11:40	41.95	0.59	764	92	90	5	2.220
2-2	0.18	0.424	11:45	44.17	0.59	764	92	90	5	2.180
2-3	0.22	0.469	11:50	46.35	0.72	762	92	90	5	2.520
2-3	0.22	0.469	11:55	48.87	0.72	763	89	89	5	2.530
2-3	0.22	0.469	12:00	51.40	0.72	762	85	85	5	2.500
2-3	0.22	0.469	12:05	53.90	0.72	761	84	84	5	2.400
			12:10	56.30						0.000
										0.000
										0.000
										0.000
										0.000
										0.000
										0.000
										0.000
										0.000
										0.000
										0.000
										0.000
										0.000
										0.000
										0.000
										0.000
										0.000
										0.000
										0.000
										0.000
										0.000
										0.000
										0.000
										0.000
										0.000
										0.000
		0.408		26.270	0.56	764	90	90		#####
							89.83			

MOISTURE, DILUENT AND MERCURY DATA

Company Wisconsin Electric Power Compa **Date:** 11/17/99 **Test Run:** 2

Location: Unit 4 Air Heater Inlet

SILICA GEL FINAL WT.:	745.00	**grams**
SILICA GEL INITIAL WT.:	733.50	**grams**
DIFFERENCE:	11.50	
FINAL IMPINGER WATER:	4810.90	**mls.**
INITIAL IMPINGER WATER:	4775.00	**mls.**
DIFFERENCE:	35.90	
TOTAL WATER GAIN:	47.40	

ITEM	MERCURY (UG)		= NET WT. (G)
FILTER:	0.000		0.000000000
PROBE WASH:	0.000		0.000000000
		Particle-bound Total:	0.000000000
KCl:	5.088		0.000005088
		Oxidized Total:	0.000005088
HNO_3/H_2O_2:	0.915		0.000000915
$KMNO_4$:	6.314		0.000006314
		Elemental Total:	0.000007229

Orsat Analysis	1	2	3	Average
Carbon Dioxide:	14.50	14.50	14.50	14.50
Oxygen:	4.30	4.30	4.30	4.30

ONTARIO HYDRO METHOD DATA ENTRY FORM

Field Data/Calculated Data

Company:	**Wisconsin Electric Power Company**
Date:	11/17/99
Test Run:	2
Stack or Duct No.:	Unit 4 Air Heater Inlet
Start Time:	11:10
Stop Time:	12:10

Pb:	29.68	Inches Hg
Static	-4.70	Inches H2O
Ps:	29.33	Inches Hg Abs.
Vlc:	47	ml + grams
Mn:	0.0000	gm
Test Time:	60	minutes
% O2:	4.30	%
% CO2:	14.50	%
% N2:	81.20	%
Delta H:	0.56	Inches H20
Cp:	0.831	Dimensionless - pitot
Tm:	89.83	°F
Sqrt P:	0.408	Inches H20
Ts:	764.00	°F
Vm:	26.270	Cubic Feet
Dn:	0.311	Inches - nozzle
As:	350.00	Sq. Feet
Yd:	0.997	Mcf
CF:	N/A	Process tons/hr
Heat Input:	N/A	MM BTU/hr
Fd:	N/A	dscf/10^6 Btu
Fc:	N/A	scf/10^6 Btu

Vmstd:	24.984	cubic feet (dry)
Vwstd:	2.233	cubic feet (wet)
Bwo:	0.082	
Md:	30.492	lb/lb-mole (dry)
Ms:	29.467	lb/lb-mole (wet)
Excess Air (%)	25.092	
Vs:	34.518	fps
ACFM:	724888.	
DSCFM:	281428.	
WSCFM:	306576	
%I:	98.2	isokinetic variance
GR/ACF:	---	
GR/DSCF:	---	
lbs/hr	---	
lbs/ton prod.:	N/A	
lbs/MM BTU:	N/A	Heat Input
lbs/MM BTU:	N/A	O2 Basis
lbs/MM BTU:	N/A	CO2 Basis

ONTARIO HYDRO METHOD TEST SUPPORT DATA

PROJECT NO.:	94606	**TEST RUN NO.:**	3	**TEST DATE:**	11/17/99

CUSTOMER:	Wisconsin Electric Power Company	**BAROMETRIC PRESSURE (Pb)**	29.68	**in. Hg.**	
PLANT:	Port Washington Power Plant	**STATIC PRESSURE**	-4.7	**in. H2O**	
TEST LOC.:	Unit 4 Air Heater Inlet	**FLUE PRESSURE (Ps)**	29.33	**in. Hg. abs.**	
CLIENT:	Electric Power Research Institute	**PROBE LENGTH:**	5	**ft.**	
OPERATOR:	J. Platt	**PROBE LINER MATERIAL:**	Glass		
CONTROL BOX:	E-12	**NOZZLE IDENTIFICATION NO.:**	Set #1/Nozzle #3		
METER NO.:	E-12	**CALIBRATED NOZZLE DIAMETER:**	0.311	**in.**	
METER CALIBRATION FACTOR:	0.997	**LEAK CHECK** **PRE:**	0.000	**POST:**	0.000 @ 20 in. Hg.
PITOT ID NO.:	256B	**DUCT SHAPE:**	Circular DIA.		Feet
			Rectangular	5 Feet	70 Feet
PITOT TUBE COEFFICIENT:	0.831	**DUCT AREA:**	350	**sq. ft.**	
PORT LENGTH:	10.5 in.	**TEST LENGTH:**	120	**min.**	
PORT SIZE:	4 in.	**MINUTES PER POINT:**	20		
PORT TYPE:	Coupling	**TOTAL NUMBER OF TRAVERSE POINTS:**	6		

ONTARIO HYDRO METHOD TRAVERSE DATA

Company: Wisconsin Electric Power Company **Date:** 11/17/99 **Test Ru** 3

Location: Unit 4 Air Heater Inlet

Point	Δp	Sq. Root Δp	Time	Volume cubic feet	ΔH	Stack Temp °F	Meter Inlet °F	Meter Outlet °F	Vacuum in. Hg	
1-1	0.15	0.387	14:30	59.35	0.49	762	82	81	4.5	2.150
1-1	0.15	0.387	14:35	61.50	0.49	763	82	81	4.5	2.150
1-1	0.15	0.387	14:40	63.65	0.49	765	82	81	4.5	2.050
1-1	0.15	0.387	14:45	65.70	0.49	763	83	81	4.5	2.020
1-2	0.19	0.436	14:50	67.72	0.62	764	83	82	4.5	2.280
1-2	0.19	0.436	14:55	70.00	0.62	763	84	82	4.5	2.500
1-2	0.19	0.436	15:00	72.50	0.62	763	85	83	4.5	2.300
1-2	0.19	0.436	15:09	74.80	0.62	762	85	83	4.5	2.450
1-3	0.23	0.480	15:10	77.25	0.75	762	86	83	6.5	0.650
1-3	0.23	0.480	15:15	77.90	0.75	761	87	83	6.5	4.600
1-3	0.23	0.480	15:20	82.50	0.75	761	86	84	6.5	2.600
1-3	0.23	0.480	15:25	85.10	0.75	761	87	84	6.5	2.650
			15:30	87.75						0.000
2-1	0.13	0.361	15:39	88.71	0.42	755	85	84	6.5	2.040
2-1	0.13	0.361	15:44	90.75	0.42	765	84	84	6.5	1.950
2-1	0.13	0.361	15:49	92.70	0.42	765	84	84	6.5	1.900
2-1	0.13	0.361	15:54	94.60	0.42	765	84	84	8	1.900
2-2	0.19	0.436	15:59	96.50	0.62	765	85	84	8	2.250
2-2	0.19	0.436	16:04	98.75	0.62	766	84	83	8	2.450
2-2	0.19	0.436	16:09	101.20	0.62	766	84	84	8	2.360
2-2	0.19	0.436	16:14	103.56	0.62	766	83	83	8	2.440
2-3	0.20	0.447	16:19	106.00	0.65	765	83	83	10	2.600
2-3	0.20	0.447	16:24	108.60	0.65	765	83	83	10	2.350
2-3	0.20	0.447	16:29	110.95	0.65	766	83	83	10	2.450
2-3	0.20	0.447	16:34	113.40	0.65	766	83	83	11	2.500
			16:39	115.90						0.000
										0.000
										0.000
										0.000
										0.000
										0.000
										0.000
										0.000
										0.000
										0.000
										0.000
										0.000
										0.000
		0.424		55.590	0.59	764	84	83		#####
							83.48			

MOISTURE, DILUENT AND MERCURY DATA

Company Wisconsin Electric Power Compa **Date:** 11/17/99 **Test Run:** 3

Location: Unit 4 Air Heater Inlet

SILICA GEL FINAL WT.:	804.30	**grams**
SILICA GEL INITIAL WT.:	786.40	**grams**
DIFFERENCE:	17.90	
FINAL IMPINGER WATER:	4870.80	**mls.**
INITIAL IMPINGER WATER:	4797.80	**mls.**
DIFFERENCE:	73.00	
TOTAL WATER GAIN:	90.90	

ITEM	MERCURY (UG)		= NET WT. (G)
FILTER:	0.000		0.000000000
PROBE WASH:	0.000		0.000000000
		Particle-bound Total:	0.000000000
KCl:	8.898		0.000008898
		Oxidized Total:	0.000008898
HNO_3/H_2O_2:	1.920		0.000001920
$KMNO_4$:	11.894		0.000011894
		Elemental Total:	0.000013814

Orsat Analysis	1	2	3	Average
Carbon Dioxide:	14.20	14.20	14.20	14.20
Oxygen:	4.50	4.50	4.50	4.50

ONTARIO HYDRO METHOD DATA ENTRY FORM

Field Data/Calculated Data

Company:	**Wisconsin Electric Power Company**
Date:	11/17/99
Test Run:	3
Stack or Duct No.:	Unit 4 Air Heater Inlet
Start Time:	14:30
Stop Time:	16:39

Pb:	29.68	Inches Hg
Static	-4.70	Inches H2O
Ps:	29.33	Inches Hg Abs.
Vlc:	91	ml + grams
Mn:	0.0000	gm
Test Time:	120	minutes
% O2:	4.50	%
% CO2:	14.20	%
% N2:	81.30	%
Delta H:	0.59	Inches H20
Cp:	0.831	Dimensionless - pitot
Tm:	83.48	°F
Sqrt P:	0.424	Inches H20
Ts:	763.54	°F
Vm:	55.590	Cubic Feet
Dn:	0.311	Inches - nozzle
As:	350.00	Sq. Feet
Yd:	0.997	Mcf
CF:	N/A	Process tons/hr
Heat Input:	N/A	MM BTU/hr
Fd:	N/A	dscf/10^6 Btu
Fc:	N/A	scf/10^6 Btu

Vmstd:	53.491	cubic feet (dry)
Vwstd:	4.281	cubic feet (wet)
Bwo:	0.074	
Md:	30.452	lb/lb-mole (dry)
Ms:	29.529	lb/lb-mole (wet)
Excess Air (%)	26.528	
Vs:	35.834	fps
ACFM:	752508.	
DSCFM:	294782.	
WSCFM:	318376	
%I:	100.4	isokinetic variance
GR/ACF:	---	
GR/DSCF:	---	
lbs/hr	---	
lbs/ton prod.:	N/A	
lbs/MM BTU:	N/A	Heat Input
lbs/MM BTU:	N/A	O2 Basis
lbs/MM BTU:	N/A	CO2 Basis

ONTARIO HYDRO METHOD TEST SUPPORT DATA

PROJECT NO.:	94606	**TEST RUN NO.:**	1	**TEST DATE:**	11/17/99

CUSTOMER:	Wisconsin Electric Power Company	**BAROMETRIC PRESSURE (Pb)**	29.68	**in. Hg.**	
PLANT:	Port Washington Power Plant	**STATIC PRESSURE**	-2.1	**in. H2O**	
TEST LOC.:	Unit 4 Precipitator Outlet	**FLUE PRESSURE (Ps)**	29.53	**in. Hg. abs.**	
CLIENT:	Electric Power Research Institute	**PROBE LENGTH:**	11	**ft.**	
OPERATOR:	D. Helm and N. Smith	**PROBE LINER MATERIAL:**	Teflon		
CONTROL BOX:	E-51	**NOZZLE IDENTIFICATION NO.:**	#8		
METER NO.:	E-51	**CALIBRATED NOZZLE DIAMETER:**	0.245	**in.**	
METER CALIBRATION FACTOR:	1.009	**LEAK CHECK** **PRE:**	0.002	**POST:**	0.000 @ 6 in. Hg.
PITOT ID NO.:	427A	**DUCT SHAPE:**	Circular	DIA.	Feet
			Rectangular	10.75 Feet	10.75 Feet
PITOT TUBE COEFFICIENT:	0.830	**DUCT AREA:**	115.5625	**sq. ft.**	
PORT LENGTH:	21 in.	**TEST LENGTH:**	125	**min.**	
PORT SIZE:	6 in.	**MINUTES PER POINT:**	5		
PORT TYPE:	Flange	**TOTAL NUMBER OF TRAVERSE POINTS:**	25		

ONTARIO HYDRO METHOD TRAVERSE DATA

Company: Wisconsin Electric Power Company **Date:** 11/17/99 **Test Ru** 1

Location: Unit 4 Precipitator Outlet

Point	Δp	Sq. Root Δp	Time	Volume cubic feet	ΔH	Stack Temp °F	Meter Inlet °F	Meter Outlet °F	Vacuum in. Hg	
1-1	0.48	0.693	8:01	39.35	0.89	391	46	41	6	2.508
1-2	0.54	0.735	8:06	41.86	1.00	397	49	42	6	2.690
1-3	0.59	0.768	8:11	44.55	1.10	402	53	43	6	2.820
1-4	0.57	0.755	8:16	47.37	1.06	407	54	44	7	2.850
1-5	0.56	0.748	8:21	50.22	1.04	408	57	45	7	2.850
			8:26	53.07						0.000
2-1	0.55	0.742	8:30	53.07	1.02	389	54	46	6	2.650
2-2	0.63	0.794	8:35	55.72	1.17	401	57	47	7	3.030
2-3	0.66	0.812	8:40	58.75	1.23	410	58	48	7	3.020
2-4	0.53	0.728	8:45	61.77	0.99	413	59	49	6	2.610
2-5	0.64	0.800	8:50	64.38	1.19	410	60	50	7	2.990
			8:55	67.37						0.000
3-1	0.49	0.700	8:58	67.37	0.91	386	59	51	6	2.560
3-2	0.59	0.768	9:03	69.93	1.10	403	60	51	7	2.870
3-3	0.63	0.794	9:08	72.80	1.17	404	61	52	7	2.970
3-4	0.51	0.714	9:13	75.77	0.95	412	62	53	7	2.700
3-5	0.66	0.812	9:18	78.47	1.23	414	62	55	7	2.960
			9:23	81.43						0.000
4-1	0.43	0.656	9:26	81.43	0.80	383	61	54	6	2.380
4-2	0.71	0.843	9:31	83.81	1.32	400	63	54	7	3.200
4-3	0.77	0.877	9:36	87.01	1.43	404	64	55	7	3.160
4-4	0.53	0.728	9:41	90.17	0.99	405	64	55	7	2.720
4-5	0.76	0.872	9:46	92.89	1.41	408	64	56	7	3.280
			9:51	96.17						0.000
5-1	0.42	0.648	9:54	96.17	0.78	386	63	56	6	2.440
5-2	0.32	0.566	9:59	98.61	0.60	389	63	56	5	2.070
5-3	0.30	0.548	10:04	100.68	0.56	393	64	57	5	2.030
5-4	0.29	0.539	10:09	102.71	0.54	391	63	57	5	1.970
5-5	0.57	0.755	10:14	104.68	1.06	397	64	57	6	2.780
			10:19	107.46						0.000
										0.000
										0.000
										0.000
										0.000
										0.000
										0.000
										0.000
										0.000
		0.736		68.108	1.02	400	59	51		#####
							55.16			

MOISTURE, DILUENT AND MERCURY DATA

Company Wisconsin Electric Power Compa **Date:** 11/17/99 **Test Run:** 1

Location: Unit 4 Precipitator Outlet

SILICA GEL FINAL WT.:	776.00	**grams**
SILICA GEL INITIAL WT.:	762.00	**grams**
DIFFERENCE:	14.00	
FINAL IMPINGER WATER:	4831.70	**mls.**
INITIAL IMPINGER WATER:	4735.40	**mls.**
DIFFERENCE:	96.30	
TOTAL WATER GAIN:	110.30	

ITEM	MERCURY (UG)		= NET WT. (G)
FILTER:	0.005		0.000000005
PROBE WASH:	0.000		0.000000000
		Particle-bound Total:	0.000000005
KCl:	10.598		0.000010598
		Oxidized Total:	0.000010598
HNO_3/H_2O_2:	0.448		0.000000448
$KMNO_4$:	4.604		0.000004604
		Elemental Total:	0.000005052

Orsat Analysis	1	2	3	Average
Carbon Dioxide:	13.00			13.00
Oxygen:	6.00			6.00

ONTARIO HYDRO METHOD DATA ENTRY FORM

Field Data/Calculated Data

Company:	Wisconsin Electric Power Company
Date:	11/17/99
Test Run:	1
Stack or Duct No.:	Unit 4 Precipitator Outlet
Start Time:	8:01
Stop Time:	10:19

Pb:	29.68	Inches Hg
Static	-2.10	Inches H2O
Ps:	29.53	Inches Hg Abs.
Vlc:	110	ml + grams
Mn:	0.0000	gm
Test Time:	125	minutes
% O2:	6.00	%
% CO2:	13.00	%
% N2:	81.00	%
Delta H:	1.02	Inches H20
Cp:	0.830	Dimensionless - pitot
Tm:	55.16	°F
Sqrt P:	0.736	Inches H20
Ts:	400.12	°F
Vm:	68.108	Cubic Feet
Dn:	0.245	Inches - nozzle
As:	115.56	Sq. Feet
Yd:	1.009	Mcf
CF:	N/A	Process tons/hr
Heat Input:	N/A	MM BTU/hr
Fd:	N/A	dscf/10^6 Btu
Fc:	N/A	scf/10^6 Btu

Vmstd:	70.045	cubic feet (dry)
Vwstd:	5.195	cubic feet (wet)
Bwo:	0.069	
Md:	30.320	lb/lb-mole (dry)
Ms:	29.469	lb/lb-mole (wet)
Excess Air (%)	39.002	
Vs:	51.906	fps
ACFM:	359907.	
DSCFM:	202968.	
WSCFM:	218022	
%I:	97.5	isokinetic variance
GR/ACF:	---	
GR/DSCF:	---	
lbs/hr	---	
lbs/ton prod.:	N/A	
lbs/MM BTU:	N/A	Heat Input
lbs/MM BTU:	N/A	O2 Basis
lbs/MM BTU:	N/A	CO2 Basis

ONTARIO HYDRO METHOD TEST SUPPORT DATA

PROJECT NO.:	94606	**TEST RUN NO.:**	2	**TEST DATE:**	11/17/99

CUSTOMER:	Wisconsin Electric Power Company	**BAROMETRIC PRESSURE (Pb)**	29.68 **in. Hg.**
PLANT:	Port Washington Power Plant	**STATIC PRESSURE**	-2.1 **in. H2O**
TEST LOC.:	Unit 4 Precipitator Outlet	**FLUE PRESSURE (Ps)**	29.53 **in. Hg. abs.**
CLIENT:	Electric Power Research Institute	**PROBE LENGTH:**	11 **ft.**
OPERATOR:	D. Helm and N. Smith	**PROBE LINER MATERIAL:**	Teflon
CONTROL BOX:	E-51	**NOZZLE IDENTIFICATION NO.:**	#8
METER NO.:	E-51	**CALIBRATED NOZZLE DIAMETER:**	0.245 **in.**
METER CALIBRATION FACTOR:	1.009	**LEAK CHECK PRE:**	0.002 **POST:** 0.000 @ 6 in. Hg.
PITOT ID NO.:	427A	**DUCT SHAPE:**	Circular DIA. 10.75 Feet Rectangular 10.75 Feet
PITOT TUBE COEFFICIENT:	0.830	**DUCT AREA:**	115.5625 **sq. ft.**
PORT LENGTH:	21 in.	**TEST LENGTH:**	125 **min.**
PORT SIZE:	6 in.	**MINUTES PER POINT:**	5
PORT TYPE:	Flange	**TOTAL NUMBER OF TRAVERSE POINTS:**	25

Mostardi Platt

ONTARIO HYDRO METHOD TRAVERSE DATA

Company: Wisconsin Electric Power Company **Date:** 11/17/99 **Test Ru** 2

Location: Unit 4 Precipitator Outlet

Point	Δp	Sq. Root Δp	Time	Volume cubic feet	ΔH	Stack Temp °F	Meter Inlet °F	Meter Outlet °F	Vacuum in. Hg	
1-1	0.38	0.616	11:20	307.89	0.71	398	58	57	5.5	2.120
1-2	0.53	0.728	11:25	310.01	0.99	402	61	57	6.5	2.590
1-3	0.61	0.781	11:30	312.60	1.14	409	64	57	6.5	3.120
1-4	0.61	0.781	11:35	315.72	1.14	411	64	57	6.5	3.090
1-5	0.48	0.693	11:40	318.81	0.90	412	64	57	5.5	2.540
			11:45	321.35						0.000
2-1	0.48	0.693	11:50	321.35	0.90	395	60	57	5.5	2.570
2-2	0.57	0.755	11:55	323.92	1.07	401	62	57	6	2.880
2-3	0.58	0.762	12:00	326.80	1.09	413	63	57	6	2.830
2-4	0.57	0.755	12:05	329.63	1.07	417	63	57	5.5	3.640
2-5	0.58	0.762	12:10	333.27	1.09	416	64	57	7.5	2.910
			12:15	336.18						0.000
3-1	0.44	0.663	12:20	336.18	0.83	389	61	57	7.5	2.570
3-2	0.56	0.748	12:25	338.75	1.05	404	61	56	6	2.840
3-3	0.56	0.748	12:30	341.59	1.05	405	61	56	6	2.780
3-4	0.50	0.707	12:35	344.37	0.94	414	61	56	7.5	2.630
3-5	0.44	0.663	12:40	347.00	0.83	415	62	56	5.5	2.514
			12:45	349.51						0.000
4-1	0.48	0.693	12:50	349.51	0.90	387	61	56	6	2.596
4-2	0.64	0.800	12:55	352.11	1.20	400	61	56	7	3.040
4-3	0.78	0.883	13:00	355.15	1.46	408	62	56	7.5	3.330
4-4	0.64	0.800	13:05	358.48	1.20	409	62	56	7	2.920
4-5	0.74	0.860	13:10	361.40	1.39	410	62	56	7	3.474
			13:15	364.87						0.000
5-1	0.48	0.693	13:20	364.87	0.90	389	59	55	6	2.326
5-2	0.27	0.520	13:25	367.20	0.51	390	59	55	6	2.200
5-3	0.46	0.678	13:30	369.40	0.86	396	58	55	6	2.270
5-4	0.46	0.678	13:35	371.67	0.86	395	56	55	6.5	2.540
5-5	0.56	0.748	13:40	374.21	1.05	399	59	55	5.5	2.822
			13:45	377.03						0.000
										0.000
										0.000
										0.000
										0.000
										0.000
										0.000
										0.000
										0.000
		0.728		69.142	1.01	403	61	56		#####
							58.68			

MOISTURE, DILUENT AND MERCURY DATA

Company Wisconsin Electric Power Compa **Date:** 11/17/99 **Test Run:** 2

Location: Unit 4 Precipitator Outlet

SILICA GEL FINAL WT.:	731.90	**grams**
SILICA GEL INITIAL WT.:	717.00	**grams**
DIFFERENCE:	14.90	
FINAL IMPINGER WATER:	4622.20	**mls.**
INITIAL IMPINGER WATER:	4526.20	**mls.**
DIFFERENCE:	96.00	
TOTAL WATER GAIN:	110.90	

ITEM	MERCURY (UG)		= NET WT. (G)
FILTER:	0.005		0.000000005
PROBE WASH:	0.000		0.000000000
		Particle-bound Total:	0.000000005
KCl:	9.748		0.000009748
		Oxidized Total:	0.000009748
HNO_3/H_2O_2:	0.202		0.000000202
$KMNO_4$:	4.874		0.000004874
		Elemental Total:	0.000005076

Orsat Analysis	1	2	3	Average
Carbon Dioxide:	13.00			13.00
Oxygen:	6.00			6.00

ONTARIO HYDRO METHOD DATA ENTRY FORM

Field Data/Calculated Data

Company:	**Wisconsin Electric Power Company**
Date:	11/17/99
Test Run:	2
Stack or Duct No.:	Unit 4 Precipitator Outlet
Start Time:	11:20
Stop Time:	13:45

Pb:	29.68	Inches Hg
Static	-2.10	Inches H2O
Ps:	29.53	Inches Hg Abs.
Vlc:	111	ml + grams
Mn:	0.0000	gm
Test Time:	125	minutes
% O2:	6.00	%
% CO2:	13.00	%
% N2:	81.00	%
Delta H:	1.01	Inches H20
Cp:	0.830	Dimensionless - pitot
Tm:	58.68	°F
Sqrt P:	0.728	Inches H20
Ts:	403.36	°F
Vm:	69.142	Cubic Feet
Dn:	0.245	Inches - nozzle
As:	115.56	Sq. Feet
Yd:	1.009	Mcf
CF:	N/A	Process tons/hr
Heat Input:	N/A	MM BTU/hr
Fd:	N/A	dscf/10^6 Btu
Fc:	N/A	scf/10^6 Btu

Vmstd:	70.623	cubic feet (dry)
Vwstd:	5.223	cubic feet (wet)
Bwo:	0.069	
Md:	30.320	lb/lb-mole (dry)
Ms:	29.472	lb/lb-mole (wet)
Excess Air (%)	39.002	
Vs:	51.480	fps
ACFM:	356949.	
DSCFM:	200584.	
WSCFM:	215419	
%I:	99.5	isokinetic variance
GR/ACF:	---	
GR/DSCF:	---	
lbs/hr	---	
lbs/ton prod.:	N/A	
lbs/MM BTU:	N/A	Heat Input
lbs/MM BTU:	N/A	O2 Basis
lbs/MM BTU:	N/A	CO2 Basis

ONTARIO HYDRO METHOD TEST SUPPORT DATA

PROJECT NO.:	94606	**TEST RUN NO.:**	3	**TEST DATE:**	11/17/99

CUSTOMER:	Wisconsin Electric Power Company	**BAROMETRIC PRESSURE (Pb)**	29.68	**in. Hg.**	
PLANT:	Port Washington Power Plant	**STATIC PRESSURE**	-2.1	**in. H2O**	
TEST LOC.:	Unit 4 Precipitator Outlet	**FLUE PRESSURE (Ps)**	29.53	**in. Hg. abs.**	
CLIENT:	Electric Power Research Institute	**PROBE LENGTH:**	11	**ft.**	
OPERATOR:	D. Helm and N. Smith	**PROBE LINER MATERIAL:**	Teflon		
CONTROL BOX:	E-51	**NOZZLE IDENTIFICATION NO.:**	#8		
METER NO.:	E-51	**CALIBRATED NOZZLE DIAMETER:**	0.245	**in.**	
METER CALIBRATION FACTOR:	1.009	**LEAK CHECK** **PRE:**	0.005	**POST:**	0.000 @ 10 in. Hg.
PITOT ID NO.:	427A	**DUCT SHAPE:**	Circular DIA.		Feet
			Rectangular 10.75	Feet	10.75 Feet
PITOT TUBE COEFFICIENT:	0.830	**DUCT AREA:**	115.5625	**sq. ft.**	
PORT LENGTH:	21 in.	**TEST LENGTH:**	125	**min.**	
PORT SIZE:	6 in.	**MINUTES PER POINT:**	5		
PORT TYPE:	Flange	**TOTAL NUMBER OF TRAVERSE POINTS:**	25		

100

ONTARIO HYDRO METHOD TRAVERSE DATA

Company: Wisconsin Electric Power Company **Date:** 11/17/99 **Test Ru** 3

Location: Unit 4 Precipitator Outlet

Point	Δp	Sq. Root Δp	Time	Volume cubic feet	ΔH	Stack Temp °F	Meter Inlet °F	Meter Outlet °F	Vacuum in. Hg	
1-1	0.42	0.648	14:38	77.40	0.79	397	53	53	5	2.450
1-2	0.52	0.721	14:43	79.85	0.98	402	55	53	6	2.720
1-3	0.60	0.775	14:48	82.57	1.13	408	56	54	6	2.870
1-4	0.59	0.768	14:53	85.44	1.11	412	60	53	6	2.880
1-5	0.50	0.707	14:58	88.32	0.94	413	59	53	6	2.620
			15:03	90.94						0.000
2-1	0.49	0.700	15:06	90.94	0.92	396	59	53	5	2.560
2-2	0.55	0.742	15:11	93.50	1.03	404	60	54	6	2.780
2-3	0.56	0.748	15:16	96.28	1.05	414	60	54	6	2.880
2-4	0.54	0.735	15:21	99.16	1.01	418	62	55	6	2.850
2-5	0.60	0.775	15:26	102.01	1.13	415	62	55	6	2.730
			15:31	104.74						0.000
3-1	0.49	0.700	15:33	104.74	0.92	389	60	55	6	2.570
3-2	0.50	0.707	15:38	107.31	0.94	405	61	55	6	2.740
3-3	0.58	0.762	15:43	110.05	1.09	414	62	55	6	2.830
3-4	0.53	0.728	15:48	112.88	0.99	416	62	55	6	2.640
3-5	0.64	0.800	15:53	115.52	1.20	417	62	55	6	3.060
			15:58	118.58						0.000
4-1	0.46	0.678	16:01	118.58	0.86	389	61	55	6	2.610
4-2	0.69	0.831	16:06	121.19	1.29	402	62	55	6	2.980
4-3	0.76	0.872	16:11	124.17	1.43	407	64	55	7	3.320
4-4	0.61	0.781	16:16	127.49	1.14	409	64	56	7	2.900
4-5	0.69	0.831	16:21	130.39	1.29	411	64	56	7	3.080
			16:26	133.47						0.000
5-1	0.55	0.742	16:28	133.47	1.03	389	64	56	6	2.750
5-2	0.37	0.608	16:33	136.22	0.69	392	63	56	5	2.380
5-3	0.24	0.490	16:38	138.60	0.45	395	62	56	5	1.790
5-4	0.30	0.548	16:43	140.39	0.56	394	62	56	5	2.060
5-5	0.62	0.787	16:48	142.45	1.16	399	62	56	6	2.930
			16:53	145.38						0.000
										0.000
										0.000
										0.000
										0.000
										0.000
										0.000
										0.000
										0.000
										0.000
		0.727		67.980	1.01	404	61	55		#####
							57.80			

MOISTURE, DILUENT AND MERCURY DATA

Company Wisconsin Electric Power Compa **Date:** 11/17/99 **Test Run:** 3

Location: Unit 4 Precipitator Outlet

SILICA GEL FINAL WT.:	774.10	**grams**
SILICA GEL INITIAL WT.:	761.10	**grams**
DIFFERENCE:	13.00	
FINAL IMPINGER WATER:	4828.90	**mls.**
INITIAL IMPINGER WATER:	4730.00	**mls.**
DIFFERENCE:	98.90	
TOTAL WATER GAIN:	111.90	

ITEM	MERCURY (UG)		= NET WT. (G)
FILTER:	0.122		0.000000122
PROBE WASH:	0.000		0.000000000
		Particle-bound Total:	0.000000122
KCl:	10.698		0.000010698
		Oxidized Total:	0.000010698
HNO_3/H_2O_2:	0.496		0.000000496
$KMNO_4$:	4.484		0.000004484
		Elemental Total:	0.000004980

Orsat Analysis	1	2	3	Average
Carbon Dioxide:	13.00			13.00
Oxygen:	6.00			6.00

ONTARIO HYDRO METHOD DATA ENTRY FORM

Field Data/Calculated Data

Company:	**Wisconsin Electric Power Company**
Date:	11/17/99
Test Run:	3
Stack or Duct No.:	Unit 4 Precipitator Outlet
Start Time:	14:38
Stop Time:	16:53

Pb:	29.68	Inches Hg
Static	-2.10	Inches H2O
Ps:	29.53	Inches Hg Abs.
Vlc:	112	ml + grams
Mn:	0.0000	gm
Test Time:	125	minutes
% O2:	6.00	%
% CO2:	13.00	%
% N2:	81.00	%
Delta H:	1.01	Inches H20
Cp:	0.830	Dimensionless - pitot
Tm:	57.80	°F
Sqrt P:	0.727	Inches H20
Ts:	404.28	°F
Vm:	67.980	Cubic Feet
Dn:	0.245	Inches - nozzle
As:	115.56	Sq. Feet
Yd:	1.009	Mcf
CF:	N/A	Process tons/hr
Heat Input:	N/A	MM BTU/hr
Fd:	N/A	dscf/10^6 Btu
Fc:	N/A	scf/10^6 Btu

Vmstd:	69.555	cubic feet (dry)
Vwstd:	5.270	cubic feet (wet)
Bwo:	0.070	
Md:	30.320	lb/lb-mole (dry)
Ms:	29.452	lb/lb-mole (wet)
Excess Air (%)	39.002	
Vs:	51.449	fps
ACFM:	356731.	
DSCFM:	199910.	
WSCFM:	215058	
%I:	98.3	isokinetic variance
GR/ACF:	---	
GR/DSCF:	---	
lbs/hr	---	
lbs/ton prod.:	N/A	
lbs/MM BTU:	N/A	Heat Input
lbs/MM BTU:	N/A	O2 Basis
lbs/MM BTU:	N/A	CO2 Basis

Project Summary-Samples Received Report

Project	*Client*	*Unit*
94606	WEPCO	PORT WASHINGTON,WI

Project	*Sample*	*Sample Point*	*Date Received*	*Analyte Detail*
94606	001	INL FILTER T1	11/18/1999	Mercury
94606	002	INL FILTER T2	11/18/1999	Mercury
94606	003	INL FILTER T3	11/18/1999	Mercury
94606	004	INL HNO3 RNS T1	11/18/1999	Mercury
94606	005	INL HNO3 RNS T2	11/18/1999	Mercury
94606	006	INL HNO3 RNS T3	11/18/1999	Mercury
94606	007	INL KCL IMP T1	11/18/1999	Mercury
94606	008	INL KCL IMP T2	11/18/1999	Mercury
94606	009	INL KCL IMP T3	11/18/1999	Mercury
94606	010	IN HNO3/H2O2 T1	11/18/1999	Mercury
94606	011	IN HNO3/H2O2 T2	11/18/1999	Mercury
94606	012	IN HNO3/H2O2 T3	11/18/1999	Mercury
94606	013	INL KMNO4 IM T1	11/18/1999	Mercury
94606	014	INL KMNO4 IM T2	11/18/1999	Mercury
94606	015	INL KMNO4 IM T3	11/18/1999	Mercury
94606	016	OUTL FILTER T1	11/18/1999	Mercury
94606	017	OUTL FILTER T2	11/18/1999	Mercury
94606	018	OUTL FILTER T3	11/18/1999	Mercury
94606	019	OUT HNO3 RNS T1	11/18/1999	Mercury
94606	020	OUT HNO3 RNS T2	11/18/1999	Mercury
94606	021	OUT HNO3 RNS T3	11/18/1999	Mercury
94606	022	OUT KCL IMP T1	11/18/1999	Mercury
94606	023	OUT KCL IMP T2	11/18/1999	Mercury
94606	024	OUT KCL IMP T3	11/18/1999	Mercury
94606	025	OUT HNO3/H2O2-1	11/18/1999	Mercury
94606	026	OUT HNO3/H2O2-2	11/18/1999	Mercury

Project	*Sample*	*Sample Point*	*Date Received*	*Analyte Detail*
94606	027	OUT HNO3/H2O2-3	11/18/1999	Mercury
94606	028	OUT KMNO4 IM T1	11/18/1999	Mercury
94606	029	OUT KMNO4 IM T2	11/18/1999	Mercury
94606	030	OUT KMNO4 IM T3	11/18/1999	Mercury
94606	031	FLD BL INL KCL	11/18/1999	Mercury
94606	032	F/B HNO3/H2O2	11/18/1999	Mercury
94606	033	F/B INL KMNO4	11/18/1999	Mercury
94606	034	FLD BL OUT KCL	11/18/1999	Mercury
94606	035	F/B HNO3/H2O2	11/18/1999	Mercury
94606	036	F/B OUTL KMNO4	11/18/1999	Mercury
94606	037	BLANK:QRTZ FILT	11/18/1999	Mercury
94606	038	BLANK:QRTZ FILT	11/18/1999	Mercury
94606	039	BLANK:QRTZ FILT	11/18/1999	Mercury
94606	040	REAG BLNK HNO3	11/18/1999	Mercury
94606	041	REAG BLNK KCL	11/18/1999	Mercury
94606	042	R/BL HNO3/H2O2	11/18/1999	Mercury
94606	043	REAG BLNK KMNO4	11/18/1999	Mercury
94606	044	R/BL HYDROXYLAM	11/18/1999	Mercury
94606	045	COAL T1 MILL 32	11/18/1999	Hold
94606	046	COAL T1 MILL 41	11/18/1999	Hold
94606	047	COAL T2 MILL 32	11/18/1999	Hold
94606	048	COAL T2 MILL 41	11/18/1999	Hold
94606	049	COAL T3 MILL 32	11/18/1999	Hold
94606	050	COAL T3 MILL 41	11/18/1999	Hold
94606	051	COAL COMPOS.T1	11/18/1999	Mercury
94606	051	COAL COMPOS.T1	11/18/1999	Chlorine
94606	051	COAL COMPOS.T1	11/18/1999	Ultimate/Proximate on Coal
94606	052	COAL COMPOS.T2	11/18/1999	Mercury
94606	052	COAL COMPOS.T2	11/18/1999	Chlorine
94606	052	COAL COMPOS.T2	11/18/1999	Ultimate/Proximate on Coal

Project	*Sample*	*Sample Point*	*Date Received*	*Analyte Detail*
94606	053	COAL COMPOS.T3	11/18/1999	Mercury
94606	053	COAL COMPOS.T3	11/18/1999	Chlorine
94606	053	COAL COMPOS.T3	11/18/1999	Ultimate/Proximate on Coal
94606	055	ASH SAMPLE	11/18/1999	Hold
94606	056	COAL MILL#32	11/18/1999	Hold
94606	057	COAL MILL#41	11/18/1999	Hold

COMMERCIAL TESTING & ENGINEERING CO.

GENERAL OFFICES: 1919 SOUTH HIGHLAND AVE., SUITE 210-B, LOMBARD, ILLINOIS 60148 • TEL: 630-953-9300 FAX: 630-953-9306

SINCE 1908®

SGS Member of the SGS Group (Société Générale de Surveillance)

ADDRESS ALL CORRESPONDENCE TO:
16130 VAN DRUNEN RD.
SOUTH HOLLAND, IL 60473
TEL: (708) 331-2900
FAX: (708) 333-3060

December 14, 1999

MOSTARDI-PLATT ASSOCIATES, INC
945 Oaklawn Avenue
Elmhurst, IL 60126
Attn: Frank Jarke

Sample identification by
Mostardi-Platt Assoc., Inc.

Kind of sample reported to us: Coal

MPA Sample No: 94606-051

Sample taken at: ------

Sample taken by: Mostardi-Platt Assoc., Inc.

Date sampled: November 17, 1999

Date received: December 3, 1999

P.O. No. 22686

Analysis Report No. 71-108387

PROXIMATE ANALYSIS	As Received	Dry Basis
% Moisture	2.43	xxxxx
% Ash	7.22	7.40
% Volatile	32.27	33.07
% Fixed Carbon	58.08	59.53
	100.00	100.00
Btu/lb	13684	14025
% Sulfur	1.45	1.49
MAF Btu		15146

ULTIMATE ANALYSIS	As Received	Dry Basis
% Moisture	2.43	xxxxx
% Carbon	76.00	77.89
% Hydrogen	4.95	5.07
% Nitrogen	1.50	1.54
% Sulfur	1.45	1.49
% Ash	7.22	7.40
% Oxygen(diff)	6.45	6.61
	100.00	100.00
CHLORIDE ug/g	1120	1148

METHODS

Moisture: ASTM D 3173; Ash: ASTM D 3174; Volatile: ASTM D 3175; Fixed Carbon: Calculated Value; ASTM D 3172
Btu/lb: ASTM 3286; Sulfur: ASTM D 4239 (Method C); Carbon, Hydrogen & Nitrogen: ASTM D 5373; Chloride: ASTM D 4208

Respectfully submitted,
COMMERCIAL TESTING & ENGINEERING CO.

107 South Holland Laboratory

MEMBER ACIL

COMMERCIAL TESTING & ENGINEERING CO.

GENERAL OFFICES: 1919 SOUTH HIGHLAND AVE., SUITE 210-B, LOMBARD, ILLINOIS 60148 • TEL: 630-953-9300 FAX: 630-953-9306

SINCE 1908®

SGS Member of the SGS Group (Société Générale de Surveillance)

ADDRESS ALL CORRESPONDENCE TO:
16130 VAN DRUNEN RD.
SOUTH HOLLAND, IL 60473
TEL: (708) 331-2900
FAX: (708) 333-3060

December 14, 1999

MOSTARDI-PLATT ASSOCIATES, INC
945 Oaklawn Avenue
Elmhurst, IL 60126
Attn: Frank Jarke

Sample identification by
Mostardi-Platt Assoc., Inc.

Kind of sample reported to us: Coal

MPA Sample No: 94606-051

Sample taken at: ------

Sample taken by: Mostardi-Platt Assoc., Inc.

Date sampled: November 17, 1999

Date received: December 3, 1999

P.O. No. 22686

Analysis Report No. 71-108387

	Dry Basis, ug/g	MDL, ug/g
Mercury, Hg	0.09	0.01

	Expected	Observed
SARM 1157	0.05	0.05
NIST 1630A	0.11	0.10

MDL Denotes Method Detection Limit

METHOD
Mercury: ASTM D 3684

Respectfully submitted,
COMMERCIAL TESTING & ENGINEERING CO.

South Holland Laboratory

MEMBER ACIL

OVER 40 BRANCH LABORATORIES STRATEGICALLY LOCATED IN PRINCIPAL COAL MINING AREAS, TIDEWATER AND GREAT LAKES PORTS, AND RIVER LOADING FACILITIES

Watermarked For Your Protection

TERMS AND CONDITIONS ON REVERSE

COMMERCIAL TESTING & ENGINEERING CO.

GENERAL OFFICES: 1919 SOUTH HIGHLAND AVE., SUITE 210-B, LOMBARD, ILLINOIS 60148 • TEL: 630-953-9300 FAX: 630-953-9306

SINCE 1908®

SGS Member of the SGS Group (Société Générale de Surveillance)

ADDRESS ALL CORRESPONDENCE TO:
16130 VAN DRUNEN RD.
SOUTH HOLLAND, IL 60473
TEL: (708) 331-2900
FAX: (708) 333-3060

December 14, 1999

MOSTARDI-PLATT ASSOCIATES, INC
945 Oaklawn Avenue
Elmhurst, IL 60126
Attn: Frank Jarke

Sample identification by
Mostardi-Platt Assoc., Inc.

Kind of sample reported to us Coal

MPA Sample No: 94606-052

Sample taken at ------

Sample taken by Mostardi-Platt Assoc., Inc.

Date sampled November 17, 1999

Date received December 3, 1999

P.O. No. 22686

Analysis Report No. 71-108388

PROXIMATE ANALYSIS	As Received	Dry Basis
% Moisture	2.46	xxxxx
% Ash	7.24	7.42
% Volatile	34.77	35.65
% Fixed Carbon	55.53	56.93
	100.00	100.00
Btu/lb	13604	13947
% Sulfur	1.51	1.55
MAF Btu		15065

ULTIMATE ANALYSIS	As Received	Dry Basis
% Moisture	2.46	xxxxx
% Carbon	76.02	77.94
% Hydrogen	4.93	5.05
% Nitrogen	1.48	1.52
% Sulfur	1.51	1.55
% Ash	7.24	7.42
% Oxygen(diff)	6.36	6.52
	100.00	100.00
CHLORIDE ug/g	1210	1241

METHODS

Moisture: ASTM D 3173; Ash: ASTM D 3174; Volatile: ASTM D 3175; Fixed Carbon: Calculated Value; ASTM D 3172
Btu/lb: ASTM 3286; Sulfur: ASTM D 4239 (Method C); Carbon, Hydrogen & Nitrogen: ASTM D 5373; Chloride: ASTM D 4208

Respectfully submitted,
COMMERCIAL TESTING & ENGINEERING CO.

109

South Holland Laboratory

MEMBER ACIL

COMMERCIAL TESTING & ENGINEERING CO.

GENERAL OFFICES: 1919 SOUTH HIGHLAND AVE., SUITE 210-B, LOMBARD, ILLINOIS 60148 • TEL: 630-953-9300 FAX: 630-953-9306

NCE 1908®

SGS Member of the SGS Group (Société Générale de Surveillance)

ADDRESS ALL CORRESPONDENCE TO:
16130 VAN DRUNEN RD.
SOUTH HOLLAND, IL 60473
TEL: (708) 331-2900
FAX: (708) 333-3060

December 14, 1999

MOSTARDI-PLATT ASSOCIATES, INC
945 Oaklawn Avenue
Elmhurst, IL 60126
Attn: Frank Jarke

Sample identification by
Mostardi-Platt Assoc., Inc.

Kind of sample reported to us: Coal

MPA Sample No: 94606-052

Sample taken at: ------

Sample taken by: Mostardi-Platt Assoc., Inc.

Date sampled: November 17, 1999

Date received: December 3, 1999

P.O. No. 22686

Analysis Report No. 71-108388

	Dry Basis, ug/g	MDL, ug/g
Mercury, Hg	0.09	0.01

	Expected	Observed
SARM 1157	0.05	0.05
NIST 1630A	0.11	0.10

MDL Denotes Method Detection Limit

METHOD
Mercury: ASTM D 3684

Respectfully submitted,
COMMERCIAL TESTING & ENGINEERING CO.

110 South Holland Laboratory

MEMBER ACIL

Watermarked For Your Protection

TERMS AND CONDITIONS ON REVERSE

COMMERCIAL TESTING & ENGINEERING CO.

GENERAL OFFICES: 1919 SOUTH HIGHLAND AVE., SUITE 210-B, LOMBARD, ILLINOIS 60148 • TEL: 630-953-9300 FAX: 630-953-9306

INCE 1908®

SGS Member of the SGS Group (Société Générale de Surveillance)

ADDRESS ALL CORRESPONDENCE TO:
16130 VAN DRUNEN RD.
SOUTH HOLLAND, IL 60473
TEL: (708) 331-2900
FAX: (708) 333-3060

December 14, 1999

MOSTARDI-PLATT ASSOCIATES, INC
945 Oaklawn Avenue
Elmhurst, IL 60126
Attn: Frank Jarke

Sample identification by
Mostardi-Platt Assoc., Inc.

Kind of sample reported to us: Coal

MPA Sample No: 94606-053

Sample taken at: ------

Sample taken by: Mostardi-Platt Assoc., Inc.

Date sampled: November 17, 1999

Date received: December 3, 1999

P.O. No. 22686

Analysis Report No. 71-108389

PROXIMATE ANALYSIS	As Received	Dry Basis
% Moisture	2.15	xxxxx
% Ash	7.28	7.44
% Volatile	34.80	35.56
% Fixed Carbon	55.77	57.00
	100.00	100.00
Btu/lb	13681	13982
% Sulfur	1.47	1.50
MAF Btu		15106

ULTIMATE ANALYSIS	As Received	Dry Basis
% Moisture	2.15	xxxxx
% Carbon	76.52	78.20
% Hydrogen	4.83	4.94
% Nitrogen	1.52	1.55
% Sulfur	1.47	1.50
% Ash	7.28	7.44
% Oxygen(diff)	6.23	6.37
	100.00	100.00
CHLORIDE ug/g	1230	1257

METHODS

Moisture: ASTM D 3173; Ash: ASTM D 3174; Volatile: ASTM D 3175; Fixed Carbon: Calculated Value; ASTM D 3172
Btu/lb: ASTM 3286; Sulfur: ASTM D 4239 (Method C); Carbon, Hydrogen & Nitrogen: ASTM D 5373; Chloride: ASTM D 4208

Respectfully submitted,
COMMERCIAL TESTING & ENGINEERING CO.

111

South Holland Laboratory

MEMBER ACIL

COMMERCIAL TESTING & ENGINEERING CO.

GENERAL OFFICES: 1919 SOUTH HIGHLAND AVE., SUITE 210-B, LOMBARD, ILLINOIS 60148 • TEL: 630-953-9300 FAX: 630-953-9306

SINCE 1908®

SGS Member of the SGS Group (Société Générale de Surveillance)

ADDRESS ALL CORRESPONDENCE TO:
16130 VAN DRUNEN RD.
SOUTH HOLLAND, IL 60473
TEL: (708) 331-2900
FAX: (708) 333-3060

December 14, 1999

MOSTARDI-PLATT ASSOCIATES, INC
945 Oaklawn Avenue
Elmhurst, IL 60126
Attn: Frank Jarke

Sample identification by
Mostardi-Platt Assoc., Inc.

Kind of sample reported to us: Coal

MPA Sample No: 94606-053

Sample taken at: ------

Sample taken by: Mostardi-Platt Assoc., Inc.

Date sampled: November 17, 1999

Date received: December 3, 1999

P.O. No. 22686

Analysis Report No. 71-108389

	Dry Basis, ug/g	MDL, ug/g
Mercury, Hg	0.09	0.01

	Expected	Observed
SARM 1157	0.05	0.05
NIST 1630A	0.11	0.10

MDL Denotes Method Detection Limit

METHOD
Mercury: ASTM D 3684

Respectfully submitted,
COMMERCIAL TESTING & ENGINEERING CO.

112

South Holland Laboratory

MEMBER ACIL

COMMERCIAL TESTING & ENGINEERING CO.

GENERAL OFFICES: 1919 SOUTH HIGHLAND AVE., SUITE 210-B, LOMBARD, ILLINOIS 60148 • TEL: 630-953-9300 FAX: 630-953-9306

SINCE 1908®

SGS Member of the SGS Group (Société Générale de Surveillance)

ADDRESS ALL CORRESPONDENCE TO:
16130 VAN DRUNEN RD.
SOUTH HOLLAND, IL 60473
TEL: (708) 331-2900
FAX: (708) 333-3060

February 29, 2000

MOSTARDI-PLATT ASSOCIATES, INC
945 Oaklawn Avenue
Elmhurst, IL 60126
Attn: Frank Jarke

Sample identification by
Mostardi-Platt Assoc., Inc.

Kind of sample reported to us Ash

MPA Sample No: 94606-055

Sample taken at ------

Sample taken by Mostardi-Platt Assoc., Inc.

Date sampled November 17, 1999

Date received February 10, 2000

P.O. No. 23036

Analysis Report No. 71-114324

	Dry Basis, ug/g	MDL, ug/g
Mercury, Hg	0.14	0.01

	Expected	Observed
SARM 1157	0.05	0.05
NIST 1630A	0.11	0.10

MDL Denotes Method Detection Limit

METHOD
Mercury: ASTM D 3684

Respectfully submitted,
COMMERCIAL TESTING & ENGINEERING CO.

113 Joseph B. Fabus

South Holland Laboratory

MEMBER ACIL

al Watermarked For Your Protection

TERMS AND CONDITIONS ON REVERSE

COMMERCIAL TESTING & ENGINEERING CO.
GENERAL OFFICES: 1919 SOUTH HIGHLAND AVE., SUITE 210-B, LOMBARD, ILLINOIS 60148 • TEL: 630-953-9300 FAX: 630-953-9306
SINCE 1908®
SGS Member of the SGS Group (Société Générale de Surveillance)

ADDRESS ALL CORRESPONDENCE TO:
16130 VAN DRUNEN RD.
SOUTH HOLLAND, IL 60473
TEL: (708) 331-2900
FAX: (708) 333-3060

February 29, 2000

MOSTARDI-PLATT ASSOCIATES, INC
945 Oaklawn Avenue
Elmhurst, IL 60126
Attn: Frank Jarke

Sample identification by
Mostardi-Platt Assoc., Inc.

Kind of sample reported to us Ash

MPA Sample No: 94606-055

Sample taken at ------

Sample taken by Mostardi-Platt Assoc., Inc.

Date sampled November 17, 1999

Date received February 10, 2000

P.O. No. 23036

Analysis Report No. 71-114324

Dry Basis

% Chloride 0.80

METHOD
Chloride: ASTM D 2361

Respectfully submitted,
COMMERCIAL TESTING & ENGINEERING CO.

114 Joseph B. Houser

South Holland Laboratory

MEMBER ACIL

OVER 40 BRANCH LABORATORIES STRATEGICALLY LOCATED IN PRINCIPAL COAL MINING AREAS, TIDEWATER AND GREAT LAKES PORTS, AND RIVER LOADING FACILITIES
al Watermarked For Your Protection
TERMS AND CONDITIONS ON REVERSE

Final Results

April 18, 2000

Set Number: 49978 **Request Date:** Tuesday, March 28, 2000

Fund#: 4694 **Due Date:** Tuesday, April 11, 2000

PI: Carolyn Lillemoen **Set Description:** ICR Coal Samples

Contact Person: C. Lillemoen

Sample	49978-01		
49978-01	AB82383 PW #32 Mill		
Mercury		0.15	µg/g
49978-02	AB82384 PW #32 Mill		
Mercury		0.15	µg/g
49978-03	AB82385 PW #32 Mill		
Mercury		0.15	µg/g
49978-04	AB82386 PW #41 Mill		
Mercury		0.13	µg/g
49978-05	AB82387 PW #41 Mill		
Mercury		0.13	µg/g
49978-06	AB82388 PW #41 Mill		
Mercury		0.13	µg/g
49978-07	AB82389 VA #3A FDR		
Mercury		0.0092	µg/g
49978-08	AB82390 VA #3B FDR		
Mercury		0.013	µg/g
49978-09	AB82391 VA #3 FDR		
Mercury		0.015	µg/g
49978-10	AB 82383 PW#32 Mill microwave digestion		
Mercury		0.186	µg/g
49978-11	AB 82391 VA #3 FDR microwave digestion		
Mercury		0.014	µg/g

Coal samples 49978-01 through 49978-09 were analyzed for total Hg using EPA Method 7473; "Mercury in Solids and Solutions by Thermal Decomposition Amalgamation and Atomic Absorption Spectrophotometry". The instrument used for the analysis was the DMA-80a (Milestone, Inc.)

For comparison, samples 49978-01 and 49978-09 were renumbered 49978-10 and 49978-11 respectively, and prepared using EPA Method 3052; "Microwave Assisted Acid Digestion of Siliceous and Organically Based Matrices". The microwave used for the digestion was a MDS2100 (CEM Corporation). The digested samples were analyzed using EPA Method 7471a; "Mercury in Solid or Semisolid Wastes by Cold Vapor Atomic Absorption Spectroscopy". The instrument used for analysis was a M6000a Mercury Analyzer (CETAC Technologies, Inc.)

1 Distribution CML Date 4/18/00

Final Results

April 18, 2000

Set Number: 49973
Fund#: 4694
PI: Carolyn Lillemoen
Contact Person: C. Lillemoen

Request Date: Tuesday, March 21, 2000
Due Date: Tuesday, April 04, 2000
Set Description: ICR Fly Ash

Sample			
49973-01	**WEPCO-Port Washington ESP Ash #94606-054**		
	Mercury	0.621	µg/g
49973-02	**WEPCO-Milwaukee Ash #94805-049**		
	Mercury	0.0363	µg/g

Sample 49973-01 and 49973-02 were prepared using EPA Method 3051; "Microwave Assisted Acid Digestion of Siliceous and Organically Based Matrices". The microwave used for the digestion was a MDS2100 (CEM Corporation). The digested samples were analyzed using EPA Method 7471a; "Mercury in Solid or Semisolid Wastes by Cold Vapor Atomic Absorption Spectroscopy". The instrument used for analysis was a M6000a Mercury Analyzer (CETAC Technologies, Inc.)

1 Distribution CWL Date 4/18/00

LABORATORY REPORT

TEI Analytical, Inc.
7177 N. Austin
Niles, IL 60714-4617
847-647-1345

PREPARED FOR:

Frank Jarke
Mostardi-Platt Associates, Inc.
945 Oaklawn Avenue
Elmhurst, IL 60126

Report #: 38256
Report Date: 2/14/00
Sample Received:
12/2/99 13:00

TEI	94606	Type	Total ug	mg/kg	Date	%RSD	Lin.Reg.	Blank	CPI	MS	MSD
38256	001	Filter		<0.003	1/12/2000	0.519	0.99999	0.3	101	108	112
38257	002	Filter		<0.003	1/12/2000	0.854	0.99999	0.3	101	108	112
38258	003	Filter		<0.003	1/12/2000	1.32	0.99999	0.3	101	108	112
38259	004	HNO3	<0.003		1/11/2000	3.99	0.99993	NA	96.6	113	112
38260	005	HNO3	<0.004		1/9/2000	3.59	0.99998	NA	101	127	127
38261	006	HNO3	<0.004		1/11/2000	5.17	0.99993	NA	96.6	113	112
38262	007	KCl	6.1		1/18/2000	0.37	0.99992	0.323	94.5	118	114
38263	008	KCl	5.09		1/18/2000	0.388	0.99992	0.323	94.5	118	114
38264	009	KCl	8.9		1/18/2000	1.03	0.99992	0.323	94.5	118	114
38265	010	H2O2	2.38		1/15/2000	0.211	0.99986	0.095	105	113	111
38266	011	H2O2	0.915		1/15/2000	0.269	0.99986	0.095	105	113	111
38267	012	H2O2	1.92		1/15/2000	0.03	0.99986	0.095	105	113	111
38268	013	KMnO4	14		1/11/2000	0.298	0.99993	0.014	96.6	113	112
38269	014	KMnO4	6.32		1/11/2000	0.291	0.99993	0.014	96.6	113	112
38270	015	KMnO4	11.9		1/11/2000	0.401	0.99993	0.014	96.6	113	112
38271	016	Filter		<0.003	1/15/2000	5.46	0.99986	0.3	103	120	120
38272	017	Filter		<0.003	1/15/2000	1.41	0.99986	0.3	103	120	120
38273	018	Filter		0.034	1/15/2000	0.4	0.99986	0.3	103	120	120
38274	019	HNO3	<0.003		1/9/2000	6.86	0.99998	NA	101	127	127
38275	020	HNO3	<0.003		1/9/2000	0.3955	0.99998	NA	101	127	127
38276	021	HNO3	<0.003		1/11/2000	7.59	0.99993	NA	96.6	113	112
38277	022	KCl	10.6		1/24/2000	0.197	0.99999	0.3	97.1	97.1	101
38278	023	KCl	9.75		1/24/2000	2.54	0.99999	0.3	97.1	97.1	101

Gayle E. O'Neill, Ph.D.

This report may not be reproduced except in its entirety.

LABORATORY REPORT

TEI Analytical, Inc.
7177 N. Austin
Niles, IL 60714-4617
847-647-1345

PREPARED FOR:

Frank Jarke
Mostardi-Platt Associates, Inc.
945 Oaklawn Avenue
Elmhurst, IL 60126

Report #: 38256
Report Date: 2/14/00
Sample Received:
12/2/99 13:00

TEI	94606	Type	Total ug	mg/kg	Date	%RSD	Lin.Reg.	Blank	CPI	MS	MSD
38279	024	KCl	10.7		2/3/2000	0.161	0.99997	0.3	95.2	111	95
38280	025	H2O2	0.448		1/15/2000	0.735	0.99986	0.095	105	113	111
38281	026	H2O2	0.202		1/15/2000	0.359	0.99986	0.095	105	113	111
38282	027	H2O2	0.496		1/15/2000	1.39	0.99986	0.095	105	113	111
38283	028	KMnO4	4.61		1/11/2000	0.384	0.99993	0.014	96.6	113	112
38284	029	KMnO4	4.88		1/11/2000	0.384	0.99993	0.014	96.6	113	112
38285	030	KMnO4	4.49		1/11/2000	0.448	0.99993	0.014	96.6	113	112
38286	031	KCl	1.3		1/18/2000	0.245	0.99992	0.323	94.5	118	114
38287	032	H2O2	<0.04		1/15/2000	5.16	0.99986	0.095	105	113	111
38288	033	KMnO4	0.211		1/11/2000	3.21	0.99993	0.014	96.6	119	119
38289	034	KCl	0.123		1/18/2000	1.14	0.99993	0.323	94.5	118	114
38290	035	H2O2	<0.04		1/15/2000	1.17	0.99986	0.095	105	113	111
38291	036	KMnO4	0.29		1/11/2000	3.14	0.99993	0.014	96.6	119	119
38292	037	Filter		<0.003	1/15/2000	0.462	0.99986	0.3	103	120	120
38293	038	Filter		<0.003	1/15/2000	1.9	0.99986	0.3	103	120	120
38294	039	Filter		<0.003	1/15/2000	1.47	0.99986	0.3	103	120	120
38295	040	HNO3	<0.002		1/11/2000	11.7	0.99993	NA	96.6	119	119
38296	041	KCl	0.002		1/11/2000	24.1	0.99993	0.323	96.6	119	119
38297	042	H2O2	<0.002		1/15/2000	7.18	0.99986	0.095	105	113	111
38298	043	KMnO4	0.006		1/11/2000	2.57	0.99993	0.014	96.6	119	119
38299	044	NH2OH	<0.003		1/11/2000	7.15	0.99993	NA	96.6	119	119

G. E. O'Neill

Gayle E. O'Neill, Ph.D.

This report may not be reproduced except in its entirety.

LABORATORY REPORT

TEI Analytical, Inc.
7177 N. Austin
Niles, IL 60714-4617
847-647-1345

PREPARED FOR:

Frank Jarke
Mostardi-Platt Associates, Inc.
945 Oaklawn Avenue
Elmhurst, IL 60126

Report #: 38256
Report Date: 2/14/00
Sample Received:
12/2/99 13:00

Mercury (Ontario Hydro Method)

The QAPP called for the analysis of all samples in duplicate with every tenth sample run in triplicate. To simplify the instrument setup, we chose to run all samples, blanks, standards, matrix spikes and matrix spike duplicates in triplicate. The reported %RSD is for the triplicate measurements.

All sample results are reported as total micrograms in the sample received by the laboratory, with the exception of the filter samples. The filter sample results are expressed as mg/kg.

The instrument was calibrated at least daily with a blank and four standards. The Lin.Reg. column in this report represents the linear regression coefficient obtained during the calibration.

The laboratory method blank is reported in ug/l in the Blank column of this report. For samples requiring only addition of Hydroxylamine Hydrochloride, NA is entered in this column. No laboratory method blanks were applicable for these samples.

The CPI column presents the % Recovery of an independent standard (obtained from CPI). The calibration curve was prepared in our laboratory from Mercuric Chloride in accordance with EPA Method 7470.

The MS and MSD columns present the % Recovery of the Matrix Spikes and Matrix Spike Duplicates.

Gayle E. O'Neill, Ph.D.

This report may not be reproduced except in its entirety.

LIST OF PARTICIPANTS

Name	Organization	Project Role
Brenda Bergemann	WEPCO	Plant Coordinator
Paul Chu	EPRI	Program Manager
James R. Platt	Mostardi Platt	Vice President
Scott W. Banach	Mostardi Platt	Director, Project Engineering
John Wendell	Mostardi Platt	Laboratory Chemist
Leonard Campo	Mostardi Platt	Test Technician
Corey Shelby	Mostardi Platt	Test Technician
David Helm	Mostardi Platt	Test Technician
Norm Smith	Mostardi Platt	Test Technician
Gayle E. O'Neill, Ph.D.	TEI Analytical, Inc.	Speciated Hg Sample Analysis
Joseph Houser	CTE	Coal Sample Analysis
Dennis Laudal	EERC	Coal/Ash Sample Analysis