EPA-450/3-91-026

Alternative Control Techniques Document— Nitric and Adipic Acid Manufacturing Plants

Emission Standards Division

US. ENVIRONMENTAL PROTECTION AGENCY
Office of Air and Radiation
Office of Air Quality Planning and Standards
Research Triangle Park, North Carolina 27711

December 1991

ALTERNATIVE CONTROL TECHNIQUES DOCUMENTS

This report is issued by the Emission Standards Division, Office of Air Quality Planning and Standards, U.S. Environmental Protection Agency, to provide information to State and local air pollution control agencies. Mention of trade names and commercial products is not intended to constitute endorsement or recommendation for use. Copies of this report are available—as supplies permit—from the Library Services Office (MD-35), U.S. Environmental Protection Agency, Research Triangle Park, North Carolina 27711 [(919) 541-2777] or, for a nominal fee, from the National Technical Information Service, 5285 Port Royal Road, Springfield, VA 22161 [(800) 553-NTIS].

TABLE OF CONTENTS

		Page
	LIST OF TABLES	iv
	LIST OF FIGURES	vi
1.0	INTRODUCTION	1-1
2.0	SUMMARY	2-1
	2.1 SUMMARY FOR NITRIC ACID PLANTS	2-1
	2.2 SUMMARY FOR ADIPIC ACID PLANTS	2-3
3.0	DESCRIPTION OF NITRIC/ADIPIC ACID MANUFACTURING	3-1
	3.1 NITRIC ACID MANUFACTURING	3-1
	3.1.1 Uses and Industry Characterization	3-1
	3.1.2 Production Process	3-2
	3.1.3 Plant Design	3-6
	3.1.4 Concentrated Nitric Acid Process	3-10
	3.2 ADIPIC ACID MANUFACTURING	3-12
	3.2.1 Uses and Industry Characterization	3-12
	3.2.2 Production Process	3-14
	3.3 REFERENCES	3-17
4.0	CHARACTERIZATION OF NO_x EMISSIONS	4-1
	4.1 NO_x EMISSIONS FROM NITRIC ACID MANUFACTURING	4-1
	4.1.1 NO_x Formation	4-1
	4.1.2 Factors Affecting NO_x Emission Levels	4-2
	4.1.3 Uncontrolled NO_x Emission Levels	4-4
	4.2 NO_x EMISSIONS FROM ADIPIC ACID MANUFACTURING	4-5
	4.2.1 NO_x Formation	4-5
	4.2.2 Factors Affecting NO_x Emission Levels	4-6
	4.2.3 Uncontrolled NO_x Emission Levels	4-6
	4.3 REFERENCES	4-7

TABLE OF CONTENTS

Page

5.0 CONTROL TECHNIQUES FOR NITROGEN OXIDES FROM NITRIC/ADIPIC ACID MANUFACTURING 5-1

5.1 NITRIC ACID MANUFACTURING 5-1

5.1.1 Extended Absorption 5-1
5.1.2 Nonselective Catalytic Reduction 5-7
5.1.3 Selective Catalytic Reduction 5-15
5.1.4 Control Technique Performance Summary . 5-23
5.1.5 Other Control Techniques 5-25

5.2 ADIPIC ACID MANUFACTURING 5-34

5.2.1 Extended Absorption 5-34
5.2.2 Thermal Reduction 5-38
5.2.3 Other Control Technique 5-43
5.2.4 Control Technique Performance Summary . 5-44

5.3 REFERENCES 5-47

6.0 CONTROL COSTS 6-1

6.1 COSTS OF CONTROL TECHNIQUES USED IN NITRIC ACID PLANTS 6-2

6.1.1 Extended Absorption 6-2
6.1.2 Nonselective Catalytic Reduction 6-6
6.1.3 Selective Catalytic Reduction 6-12

6.2 COSTS OF CONTROL TECHNIQUES USED IN ADIPIC ACID PLANTS 6-17

6.2.1 Extended Absorption 6-19
6.2.2 Thermal Reduction 6-21

6.3 REFERENCES 6-25

7.0 ENVIRONMENTAL AND ENERGY IMPACTS 7-1

7.1 NITRIC ACID MANUFACTURING 7-1

7.1.1 Air Pollution 7-1
7.1.2 Solid Waste Disposal 7-4
7.1.3 Energy Consumption 7-4

7.2 ADIPIC ACID MANUFACTURING 7-6

7.2.1 Air Pollution 7-6
7.2.2 Energy Consumption 7-8

7.3 REFERENCES FOR CHAPTER 7 7-9

LIST OF TABLES

		Page
TABLE 2-1.	NO_x EMISSIONS AND COST COMPARISON OF ALTERNATIVE CONTROL TECHNIQUES USED IN NITRIC ACID PLANTS	2-2
TABLE 2-2.	ENVIRONMENTAL AND ENERGY IMPACTS OF ALTERNATIVE CONTROL TECHNIQUES USED IN NITRIC ACID PLANTS	2-4
TABLE 2-3.	NO_x EMISSIONS AND COST COMPARISON OF ALTERNATIVE CONTROL TECHNIQUES USED IN ADIPIC ACID PLANTS	2-4
TABLE 2-4.	ENVIRONMENTAL AND ENERGY IMPACTS OF ALTERNATIVE CONTROL TECHNIQUES USED IN ADIPIC ACID PLANTS	2-4
TABLE 5-1.	NITROGEN OXIDES EMISSIONS FROM NITRIC ACID PLANTS USING EXTENDED ABSORPTION	5-6
TABLE 5-2.	NITROGEN OXIDES EMISSIONS FROM NITRIC ACID PLANTS USING NONSELECTIVE CATALYTIC REDUCTION	5-14
TABLE 5-3.	NITROGEN OXIDES EMISSIONS FROM NITRIC ACID PLANTS USING RHONE-POULENC SCR TECHNOLOGY	5-21
TABLE 5-4.	NITROGEN OXIDES EMISSIONS FROM NITRIC ACID PLANTS USING BASF SCR TECHNOLOGY	5-22
TABLE 5-5.	SUMMARY OF NO_x CONTROL TECHNIQUES PERFORMANCE NITRIC ACID PLANTS	5-24
TABLE 5-6.	NITROGEN OXIDES EMISSIONS FROM ADIPIC ACID PLANTS USING THERMAL REDUCTION	5-42
TABLE 5-7.	SUMMARY OF NO_x CONTROL TECHNIQUES PERFORMANCE FOR ADIPIC PLANTS	5-45
TABLE 6-1.	CAPITAL COST SUMMARY FOR NITRIC ACID PLANTS USING EXTENDED ABSORPTION FOR NO_x CONTROL	6-4
TABLE 6-2.	ANNUAL COST SUMMARY FOR NITRIC ACID PLANTS USING EXTENDED ABSORPTION FOR NO_x CONTROL	6-5

LIST OF TABLES

		Page
TABLE 6-3.	COST EFFECTIVENESS FOR MODEL PLANTS USING EXTENDED ABSORPTION FOR NO_x CONTROL . . .	6-7
TABLE 6-4.	ANNUAL COST SUMMARY FOR NITRIC ACID USING NONSELECTIVE CATALYTIC REDUCTION FOR NO_x CONTROL	6-9
TABLE 6-5.	COST EFFECTIVENESS FOR MODEL PLANTS USING NONSELECTIVE CATALYTIC REDUCTION FOR NO_x CONTROL	6-11
TABLE 6-6.	CAPITAL COST SUMMARY FOR NITRIC ACID PLANTS USING SELECTIVE CATALYTIC REDUCTION FOR NO_x CONTROL	6-13
TABLE 6-7.	ANNUAL COST SUMMARY FOR NITRIC ACID PLANTS USING SELECTIVE CATALYTIC REDUCTION FOR NO_x CONTROL	6-16
TABLE 6-8.	COST EFFECTIVENESS FOR NITRIC ACID PLANTS USING SELECTIVE CATALYTIC REDUCTION FOR NO_x CONTROL	6-18
TABLE 6-9.	ANNUAL COSTS FOR AN ADIPIC ACID PLANT USING EXTENDED ABSORPTION FOR NO_x CONTROL . . .	6-20
TABLE 6-10.	ANNUAL COSTS FOR ADIPIC ACID PLANTS USING THERMAL REDUCTION FOR NO_x CONTROL	6-23
TABLE 6-11.	COST EFFECTIVENESS FOR ADIPIC ACID PLANTS USING THERMAL REDUCTION FOR NO_x CONTROL .	6-24
TABLE 7-1.	NO_x EMISSIONS FROM NITRIC ACID MANUFACTURING PLANTS	7-2
TABLE 7-2.	ANNUAL ELECTRICITY REQUIREMENTS FOR EXTENDED ABSORPTION AND ANNUAL FUEL REQUIREMENTS FOR NSCR	7-5
TABLE 7-3.	NO_x EMISSIONS FROM ADIPIC ACID MANUFACTURING PLANTS	7-7

LIST OF FIGURES

		Page
Figure 3-1.	Basic nitric acid production process . . .	3-3
Figure 3-2.	Single-pressure nitric acid manufacturing process	3-8
Figure 3-3.	Dual-pressure nitric acid manufacturing process	3-9
Figure 3-4.	Nitric acid concentration using extractive distillation	3-11
Figure 3-5.	Nitric acid concentration using the direct strong nitric process (Uhde process) . . .	3-13
Figure 3-6.	Basic adipic acid manufacturing process	3-15
Figure 5-1.	Extended absorption system using one large absorber for NO_x control at nitric acid plant	5-3
Figure 5-2.	Extended absorption system using second absorber for NO_x control at nitric acid plants	5-4
Figure 5-3.	Nonselective catalytic reduction system for NO_x control at nitric acid plants	5-9
Figure 5-4.	Selective catalytic reduction system for NO_x control at nitric acid plants	5-16
Figure 5-5.	SCR catalyst performance as a function of NH_3/NO_x mole ratio	5-19
Figure 5-6.	SCR catalyst performance as a function of area velocity	5-20
Figure 5-7.	Process flow diagram for the Goodpasture process	5-26
Figure 5-8.	Flow diagram for the MASAR process	5-29
Figure 5-9.	Schematic diagram of the CDL/VITOK NO_x removal process	5-31
Figure 5-10.	Molecular sieve system	5-33
Figure 5-11.	Extended absorption for NO_x control at an adipic acid plant	5-36
Figure 5-12.	Thermal reduction unit for NO_x control at an adipic acid plant	5-40

1.0 INTRODUCTION

Congress, in the Clean Air Act Amendments of 1990 (CAAA), amended Title I of the Clean Air Act (CAA) to address ozone nonattainment areas. A new Subpart 2 was added to Part D of Section 103. Section 183(c) of the new Subpart 2 provides that:

> Within 3 years after the date of the enactment of the [CAAA], the Administrator shall issue technical documents which identify alternative controls for all categories of stationary sources of ... oxides of nitrogen which emit, or have the potential to emit 25 tons per year or more of such air pollutant.

These documents are to be subsequently revised and updated as the Administrator deems necessary.

Nitric and adipic acid manufacturing have been identified as categories of stationary sources that emit more than 25 tons of nitrogen oxides (NO_x) per year. This alternative control techniques (ACT) document provides technical information for use by State and local agencies to develop and implement regulatory programs to control NO_x emissions from nitric and adipic acid manufacturing facilities. The decision to include both categories in a single ACT document is based on similarities in the process sources of NO_x emissions from nitric and adipic acid plants.

The information in this ACT document was generated from previous EPA documents and literature searches and contacts with acid manufacturers, engineering and construction firms, control equipment vendors, and Federal, State, and local regulatory agencies. Chapter 2.0 presents a summary of the findings of this study. Chapter 3.0 provides process descriptions and industry characterizations of nitric and adipic acid manufacturing. A

discussion of NO_x emission levels is presented in Chapter 4.0. Alternative control techniques and achievable controlled emission levels are discussed in Chapter 5.0. Chapter 6.0 presents control costs and cost effectiveness for each control technique. Environmental and energy impacts associated with using NO_x control techniques are discussed in Chapter 7.0.

2.0 SUMMARY

The purpose of this document is to provide technical information that State and local agencies can use to develop strategies for reducing NO_x emissions from nitric and adipic acid manufacturing plants. This section presents a summary of the information contained in this document, including uncontrolled and controlled NO_x emissions data, ACTs, capital and annual costs, and cost effectiveness. Section 2.1 presents a summary of the information relating to nitric acid plants. Section 2.2 presents a summary of the information relating to adipic acid plants.

2.1 SUMMARY FOR NITRIC ACID PLANTS

Approximately 65 plants in the United States produce nitric acid. The ammonia-oxidation process is the most commonly used process for producing weak (50 to 70 percent) nitric acid. The absorption tower, common to all ammonia-oxidation nitric acid production facilities, is the primary source of NO_x emissions. Three control techniques are predominantly used to reduce the level of NO_x emissions in the absorber tail gas: (1) extended absorption, (2) nonselective catalytic reduction (NSCR), and (3) selective catalytic reduction (SCR). This section presents a summary of NO_x control performance, control cost data, and environmental impacts for each of the three control techniques applied to each of three model plants.

Table 2-1 is a summary of NO_x emissions and a cost comparison of the three alternative NO_x control techniques used in model plants sized at 200, 500, and 1,000 tons of nitric acid produced per day. Annual uncontrolled NO_x emissions were

TABLE 2-1. NO_x EMISSIONS AND COST COMPARISON OF ALTERNATIVE CONTROL TECHNIQUES USED IN NITRIC ACID PLANTS

Plant size, tons/d	Uncontrolled NO_x emissions, tons/yr[a]	Control technique	NO_x removed, tons/yr	Costs, $\$10^3$		Cost effectiveness, \$/ton NO_x removed
				Capital	Annual	
200	718	Extended	679	919	202	297
500	1,800	Absorption[b]	1,700	1,610	250	147
1,000	3,590		3,400	2,470	257	76
200	718		701	1,070	501	715
500	1,800	NSCR[c]	1,760	1,860	1,020	580
1,000	3,590		3,510	2,820	1,780	507
200	718		616	314	188	305
500	1,800	SCR[d]	1,550	409	442	285
1,000	3,590		3,090	553	714	231
250	898	SCR[e]	873	548	252	289

[a]Based on the following: (1) uncontrolled NO_x emissions factor of 20 lb/ton, (2) plant operating 359 days per year.
[b]Average control efficiency, 94.6 percent. Based on actual operating data.
[c]Average control efficiency, 97.7 percent. Based on actual operating data.
[d]Control efficiency, 86 percent (required to reduce uncontrolled NO_x emission level down to new source performance standard (NSPS) level, 3.0 lb/ton). Estimates provided by Engelhard Corporation.
[e]Control efficiency, 97.2 percent. Based on actual operating data.

calculated based on an uncontrolled emission factor of 20 pounds per ton (lb/ton) of nitric acid produced. Annual NO_x emissions reductions were calculated using the average control efficiency for each control technique. The average control efficiencies used in the calculations are as follows:

1. Extended absorption—94.6 percent;
2. NSCR—97.7 percent; and
3. SCR—86 percent and 97.2 percent (see Table 2-1).

Table 2-2 summarizes the environmental impacts of the NO_x control techniques used in nitric acid manufacturing plants.

2.2 SUMMARY FOR ADIPIC ACID PLANTS

TABLE 2-2. ENVIRONMENTAL AND ENERGY IMPACTS OF ALTERNATIVE CONTROL TECHNIQUES USED IN NITRIC ACID PLANTS

Control technique	Environmental impacts			
	Air	Liquid	Solid	Energy
Extended adsorption	Reduces NO_x; no secondary impacts	None	None	Pumps and refrigeration
NSCR	Reduces NO_x; possible HC and CO emissions	None	Catalyst disposal (3- to 8-yr life)	Natural gas consumption; heat recovery possible
SCR	Reduces NO_x; possible ammonia emissions	None	Catalyst disposal (2- to 10-yr life)	Pumps, fans; minimal energy consumption

TABLE 2-3. NO_x EMISSIONS AND COST COMPARISON OF ALTERNATIVE CONTROL TECHNIQUES USED IN ADIPIC ACID PLANTS

Plant size, 10^3 tons/yr	Uncontrolled NO_x emissions, tons/yr	Control technique	NO_x removed, tons/yr	Costs, $\$10^3$		Cost effectiveness, \$/ton NO_x removed
				Capital	Annual	
190	5,040	Extended adsorption	4,330	2,830	425	98
300	7,950	Thermal reduction	6,480	7,050	3,240	500
350	9,280	Thermal reduction	7,560	8,000	3,720	492

TABLE 2-4. ENVIRONMENTAL AND ENERGY IMPACTS OF ALTERNATIVE CONTROL TECHNIQUES USED IN ADIPIC ACID PLANTS

Control technique	Environmental impacts			Energy
	Air	Liquid	Solid	
Extended absorption	Reduces NO_x; no abatement of N_2O	None	None	Pumps and refrigeration used
Thermal reduction	Reduces NO_x; possible HC and CO emissions	None	None	Natural gas consumption; heat recovery possible

Four plants in the United States produce adipic acid. Three of the plants, producing over 98 percent of the total output, manufacture adipic acid using the cyclohexane-oxidation process. The NO_x absorption tower, common to all three plants, is the major source of NO_x emissions. Two control techniques are used to reduce the level of NO_x emissions in the absorber tail gas: (1) extended adsorption and (2) thermal reduction. The fourth plant, which produces adipic acid as a byproduct of caprolactam production, uses the phenol-hydrogenation process. The major sources of NO_x emissions from this plant are nitric acid storage tanks and the adipic acid reactors. Fumes containing NO_x from these sources are recovered by suction and recycled to the caprolactam process. This section presents a summary of NO_x control performance, control cost data, and environmental impacts for extended absorption and thermal reduction.

Table 2-3 is a summary of NO_x emissions and a cost comparison the two alternative control techniques used in the three adipic acid plants. Annual uncontrolled NO_x emissions were calculated based on an uncontrolled emission factor of 53 lb/ton of adipic acid produced. Annual NO_x emission reductions were calculated using controlled emission factors estimated from reported data and data obtained from an adipic acid screening study performed in 1976. Table 2-4 summarizes the environmental and energy impacts of the NO_x control techniques used in adipic acid manufacturing plants.

3.0 DESCRIPTION OF NITRIC/ADIPIC ACID MANUFACTURING

This chapter describes nitric and adipic acid manufacturing. Section 3.1 deals primarily with "weak" nitric acid and its uses, production processes, and industry characterization. Concentrated nitric acid, though produced in considerably lesser quantities, is also presented with a brief process description. Adipic acid manufacturing is described in Section 3.2. Similarly, this section characterizes the adipic acid industry, discusses various uses of adipic acid, and describes the two principal production processes.

3.1 NITRIC ACID MANUFACTURING

Nitric acid, HNO_3, is considered to be one of the four most important inorganic acids in the world and places in the top 10 chemicals produced in the United States. This nearly colorless, liquid acid is (1) a strong acid due to its high proportion of hydrogen ion, (2) a powerful oxidizing agent, attacking most metals except gold and the platinum metals, and (3) a source of fixed nitrogen, which is particularly important to the fertilizer industry.[1]

3.1.1 Uses and Industry Characterization

The largest use, about 70 percent, of nitric acid is in producing ammonium nitrate. This compound is primarily used for fertilizer.

The second largest use of nitric acid, consuming 5 to 10 percent, is for organic oxidation in adipic acid manufacturing. Terepthalic acid (an intermediate used in polyester) and other organic compounds are also obtained from organic oxidation using nitric acid.[2,3,4] Nitric acid is also used commercially for organic nitrations. A principal use is for

nitrations in explosives manufacturing, but nitric acid nitration is also used extensively in producing chemical intermediates such as nitrobenzene and dinitrotoluenes.

In 1990 there were 67 nitric acid production facilities in the United States, including government-owned munitions plants. Twenty-four of these plants had a capacity of at least 180,000 tons per year, as compared to only 13 plants with such capacity in 1984. Total plant capacity was about 11.3 million tons of nitric acid as of January 1990.[4,5] Actual production has remained steady from 1984 to 1988, with an average annual production of about 7.5 million tons of acid.[6]

Since a principal use of nitric acid is to produce ammonium nitrate for fertilizer, the heaviest concentrations of nitric acid production facilities are located in agricultural regions, primarily in the Midwest, the South Central, and the Gulf States.

3.1.2 Production Process

Nitric acid is commercially available in two forms: weak (50 to 70 percent nitric acid) and concentrated (greater than 95 percent nitric acid). Different processes are required to produce these two forms of acid. For its many uses, weak nitric acid is produced in far greater quantities than is the concentrated form. Concentrated nitric acid production is discussed in Section 3.1.4.

Virtually all commercial production of weak nitric acid in the United States utilizes three common steps: (1) catalytic oxidation of ammonia (NH_3) to nitric oxide (NO), (2) oxidation of nitric oxide with air to nitrogen dioxide (NO_2), and (3) absorption of nitrogen dioxide in water to produce "weak" nitric acid.[2] The basic process is shown in Figure 3-1

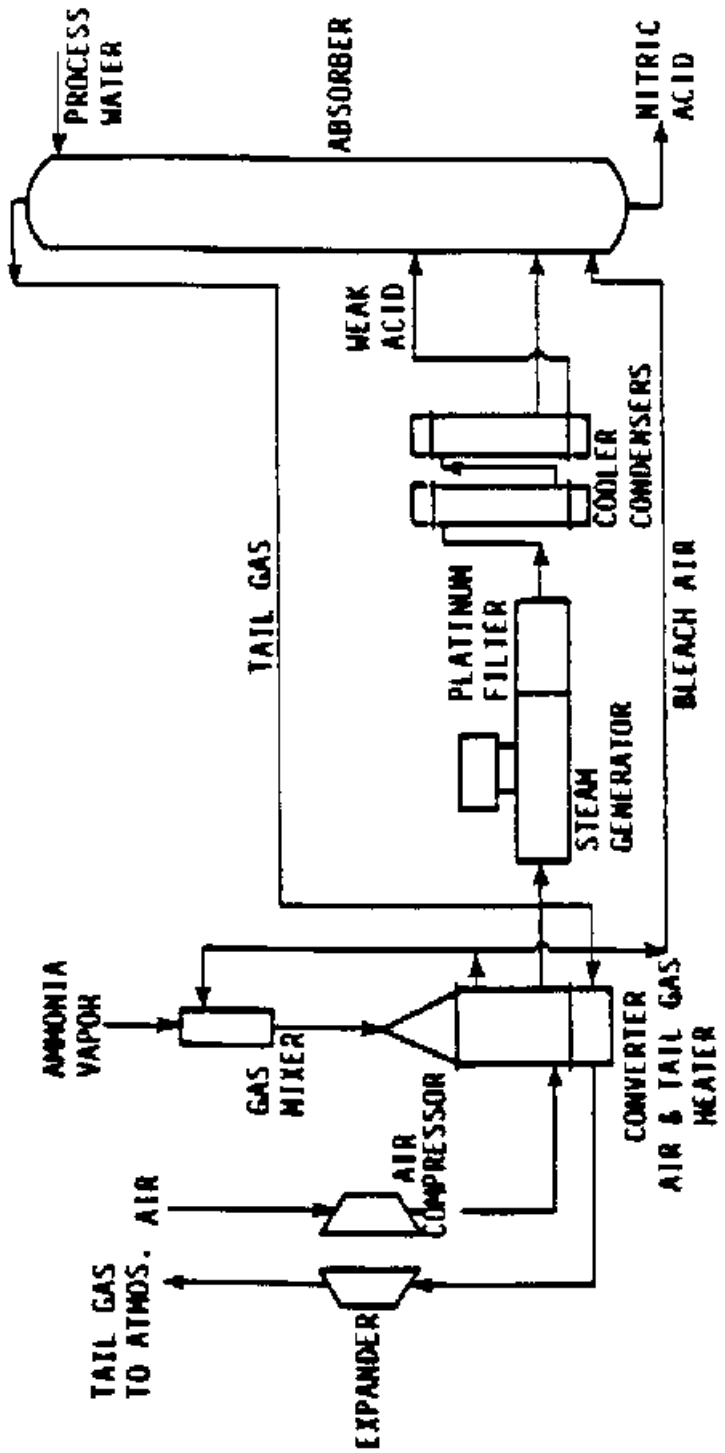

Figure 3-1. Basic nitric acid production process.[7]

.

3.1.2.1 <u>Oxidation of Ammonia</u>. The first step of the acid production process involves oxidizing anhydrous ammonia over a platinum-rhodium gauze catalyst to produce nitric oxide and water. The exothermic reaction occurs as follows:[8]

$$4NH_3 + SO_2 \rightarrow 4NO + 6H_2O + \text{heat}$$

This extremely rapid reaction proceeds almost to completion, evolving 906 kilojoules per mole (kJ/mole) (859 British thermal units per mole [Btu/mole]) of heat. Typical ammonia conversion efficiency ranges from 93 to 98 percent with good reactor design.[8]

Air is compressed, filtered, and preheated by passing through a heat exchanger. The air is mixed with vaporized anhydrous ammonia and passed to the converter. Since the explosive limit of ammonia is approached at concentrations greater than 12 mole percent, plant operation is normally maintained at 9.5 to 10.5 mole percent.[9] In the converter, the ammonia-air mixture is catalytically converted to nitric oxide and excess air. The most common catalyst consists of 90 percent platinum and 10 percent rhodium gauze constructed from squares of fine wire.[9] Up to 5 percent palladium is used to reduce costs.[2]

Operating temperature and pressure in the converter have been shown to have an influence on ammonia conversion efficiency.[8] Generally, reaction efficiency increases with gauze temperature. Oxidation temperatures typically range from 750° to 900°C (1380° to 1650°F). Higher catalyst temperatures increase reaction selectivity toward NO production, while lower catalyst temperatures are more selective toward less useful nitrogen (N_2) and nitrous oxide (N_2O).[9] The high-temperature advantage is offset by the increased loss of the precious metal catalyst. Industrial experience has demonstrated and the industry has generally accepted conversion efficiency values of 98 percent for atmospheric pressure plants at 850°C (1560°F) and 96 percent for

plants operating at 0.8 megaPascals (MPa) (8 atmospheres [atm]) and 900°C (1650°F).[2]

As mentioned earlier, the ammonia oxidation reaction is highly exothermic. In a well-designed plant, the heat byproduct is usually recovered and utilized for steam generation in a waste heat boiler. The steam can be used for liquid ammonia evaporation and air preheat in addition to nonprocess plant requirements.

As higher temperatures are used, it becomes necessary to capture platinum lost from the catalyst. Consequently, a platinum recovery unit is frequently installed on the cold side of the waste heat boiler. The recovery unit, composed of ceramic-fiber filters, is capable of capturing 50 to 75 percent of the lost platinum.[10]

3.1.2.2 <u>Oxidation of Nitric Oxide</u>. The nitric oxide formed during the ammonia oxidation process is cooled in the cooler/condenser apparatus, where it reacts noncatalytically with oxygen to form nitrogen dioxide and its liquid dimer, dinitrogen tetroxide.[4] The exothermic reaction, evolving 113 kJ/mole (107 Btu/mole), proceeds as follows:[3]

$$2NO + O_2 \rightleftharpoons 2NO_2 \rightleftharpoons N_2O_4 + \text{heat}$$

This slow, homogeneous reaction is highly temperature- and pressure-dependent. Lower temperatures, below 38°C (100°F), and higher pressures, up to 800 kilopascals (kPa) (8 atm), ensure maximum production of NO_2 and minimum reaction time.[4] Furthermore, lower temperatures and higher pressures shift the reaction to the production of N_2O_4, preventing the reverse reaction (dissociation to NO and O_2) from occurring.[2]

3.1.2.3 <u>Absorption of Nitrogen Dioxide</u>. The final step for producing weak nitric acid involves the absorption of NO_2 and N_2O_4 in water to form nitric acid (as N_2O_4 is absorbed, it releases gaseous NO). The rate of this reaction is controlled by three steps: (1) the oxidation of nitrogen oxide to NO_2 in the gas

phase, (2) the physical diffusion of the reacting oxides from the gas phase to the liquid phase, and (3) the chemical reaction in the liquid phase.[7] The exothermic reaction, evolving 135 kJ/mole (128 Btu/mole), proceeds as follows:[2]

$$3NO_2(g) + H_2O(\ell) \rightleftharpoons 2HNO_3(aq) + NO(g) + \text{heat}$$

The absorption process takes place in a stainless steel tower containing numerous layers of either bubble cap or sieve trays. The number of trays varies according to pressure, acid strength, gas composition, and operating temperature. Nitrogen dioxide gas from the cooler/condenser effluent is introduced at the bottom of the absorption tower, while the liquid dinitrogen tetroxide enters at a point higher up the tower. Deionized process water is added at the top, and the gas flows countercurrent to both liquids. Oxidation occurs in the free space between the trays, while absorption takes place in the trays. Because of the high order of the oxidation process in absorbers, roughly one-half the volume of the absorber is required to absorb the final 3 percent of nitrogen oxide gas concentration.[9] Because lower temperatures are favorable for maximum absorption, cooling coils are placed in the trays. Nitric acid in concentrations of 55 to 65 percent is withdrawn at the bottom of the tower.

Secondary air is used to improve oxidation in the absorption tower and to bleach remaining nitrogen oxides from the product acid. Absorption efficiency is further increased by utilizing high operating pressure in the absorption process. High-pressure absorption improves efficiency and increases the overall absorption rate.

Absorber tail gas is reheated using recovered process heat and expanded through a power recovery turbine. In a well-designed plant, the exhaust gas turbine can supply all the power needed for air compression with excess steam available for export.[10]

3.1.3 Plant Design

Corrosive effects of nitric acid under pressure precluded the use of pressures greater than atmospheric in early plant designs. With the advent of corrosion-resistant materials, nitric acid producers were able to take advantage of the favorable effects of increased pressure in the NO oxidation and absorption processes. All modern plants incorporate increased pressure at some point in the process. Currently, two plant pressure designs are in use: single-pressure and dual-pressure processes.

3.1.3.1 Single-Pressure Process. The single-pressure process is the most commonly employed method of nitric acid production in the United States. This process uses a single pressure—low (atmospheric), medium (400 to 800 kPa [4 to 8 atm])—or high (800 to 1,400 kPa [8 to 14 atm]) in both the ammonia oxidation and nitrogen oxides absorption phases of production. The majority of new smaller capacity (less than 300 tons per day) nitric acid plants use the high-pressure process. Operating at atmospheric pressure offers advantages over higher-pressure processes: the catalyst lasts longer (6 months) and ammonia conversion efficiency is increased. These advantages are far outweighed, however, by low absorption and NO oxidation rates (prompting the need for several large absorption towers).[8] Atmospheric plants still in existence generally operate in a standby capacity, and no new atmospheric plants are likely to be built.[7] The medium-pressure process utilizes a single higher pressure throughout the process. Though ammonia conversion efficiency and catalyst life are somewhat decreased, the economic benefits of medium pressure downstream are substantial. Single-pressure-type plants require significantly smaller, less expensive equipment for oxidation, heat exchange, and absorption.[7] A simplified single-pressure process flow diagram is shown in Figure 3-2

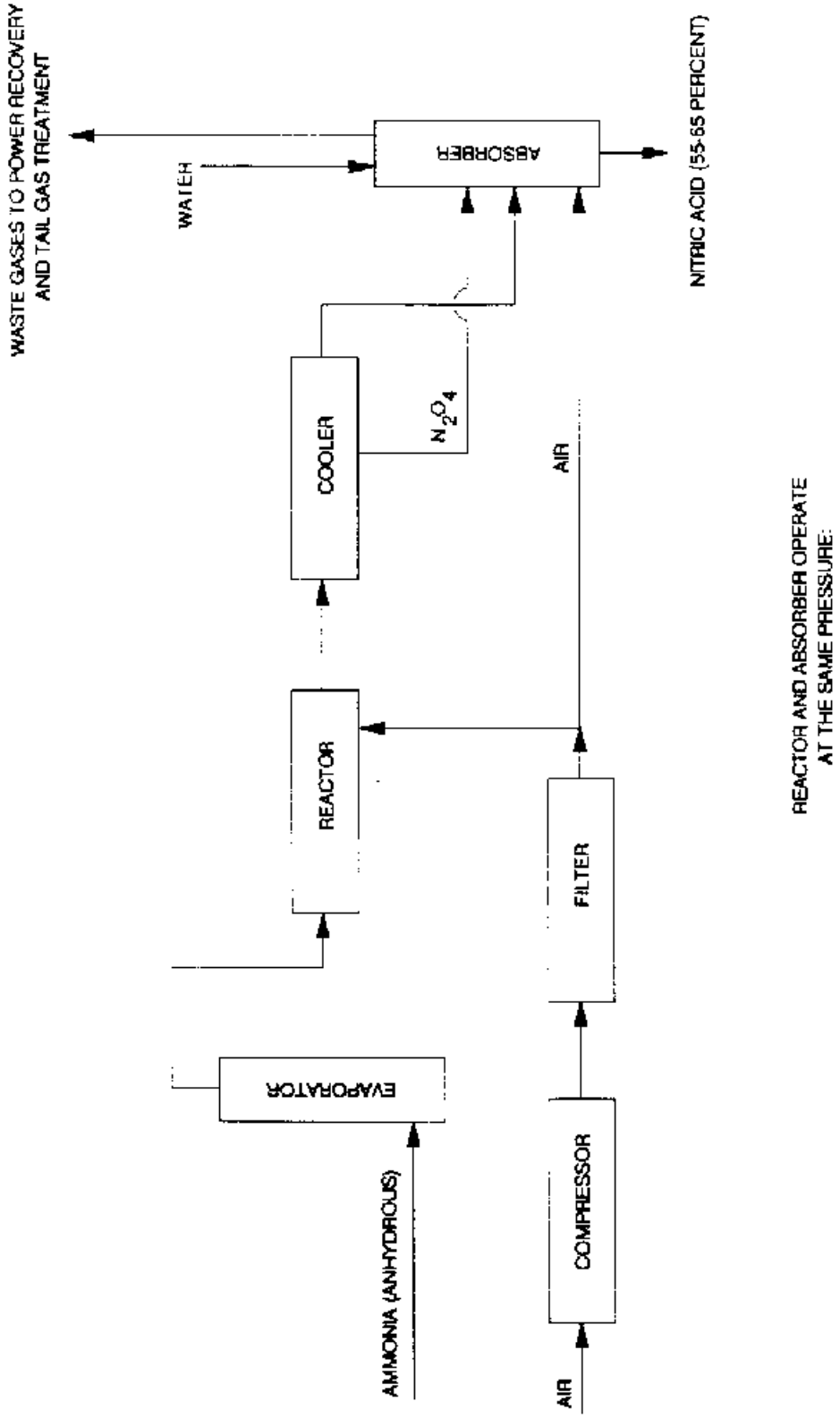

Figure 3-2. Single-pressure nitric acid manufacturing process.[11]

.

3.1.3.2 **<u>Dual-Pressure Process</u>**. The dual-pressure process combines the attributes of low-pressure ammonia oxidation with high-pressure absorption, thus optimizing the economic benefits of each. Popularized in Europe, this process is finding increasing utility in the United States. A simplified dual-pressure process flow diagram is shown in Figure 3-3

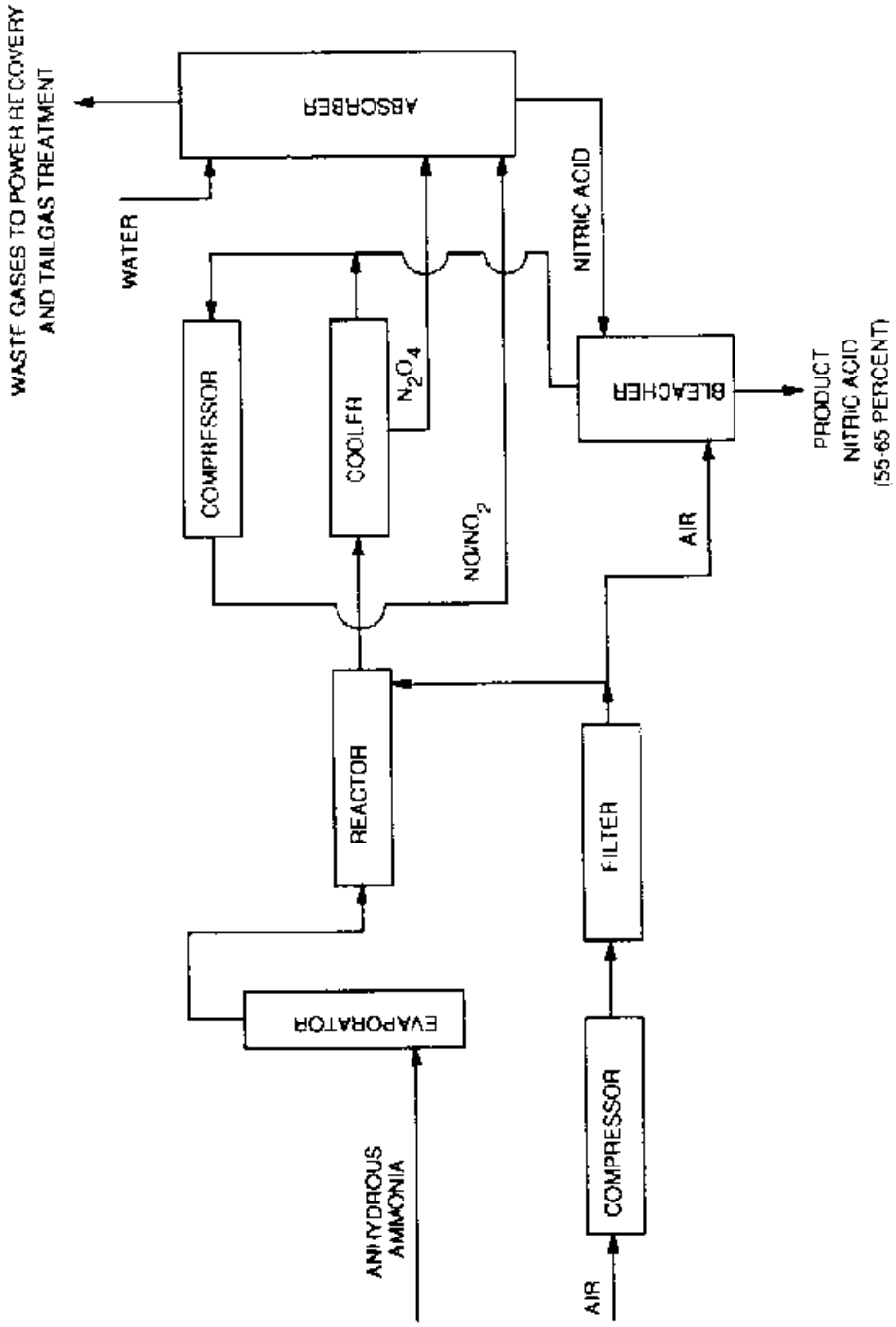

Figure 3-3. Dual-pressure nitric acid manufacturing process.[12]

.

In the dual-pressure process, ammonia oxidation is usually carried out at pressures from slightly negative to about (400 kPa [4 atm]).[2] This maintains the advantages of high ammonia conversion efficiency and extended catalyst life. The heat of reaction is recovered by the waste heat boiler, which supplies steam for the turbine-driven compressor. After passing through the cooler/condenser, the gases are compressed to the absorber pressure of 800 to 1,400 kPa (8 to 14 atm). Absorption is further enhanced by internal water cooling, which results in acid concentrations up to 70 percent and absorber efficiency to 96 percent. Nitric acid formed in the absorber is usually routed through an external bleacher where air is used to remove (bleach) dissolved oxides of nitrogen. The bleacher gases are then compressed and passed through the absorber. Using excess ammonia oxidation heat, tail gas is reheated to about 200°C (392°F) and expanded in the power-recovery turbine.[4,7,8]

Atmospheric ammonia conversion is limited (due to low gas loading at atmospheric pressure) to about 100 tons per day of equivalent acid.[2,9] Consequently, for large plants, several ammonia converters and waste heat boilers are required. Moreover, nitrous gas compression requires the use of stainless-steel compressors. These costs require an investment for dual-pressure plants from one and one-half to two times the amount for single-pressure plants. However, these costs are offset by improved ammonia efficiency, reduction of platinum catalyst loss, higher absorption efficiency, and higher power recovery.[2,7]

3.1.4 Concentrated Nitric Acid Process

In some instances, such as organic nitrations, nitric acid concentrations as high as 99 percent are required. Nitric acid forms an azeotrope with water at 68.8 weight percent (simple distillation will not separate the water from the acid). The method most commonly employed in the United States for attaining highly concentrated nitric acid is extractive distillation. Another method, the direct strong nitric process, can produce 95 to 99 percent nitric acid directly from ammonia.[2,8] However, this

process has found limited commercial application in the United States.

The extractive distillation method uses concentrated sulphuric acid as a dehydrating agent to produce 98 to 99 percent nitric acid. The process is shown in Figure 3-4

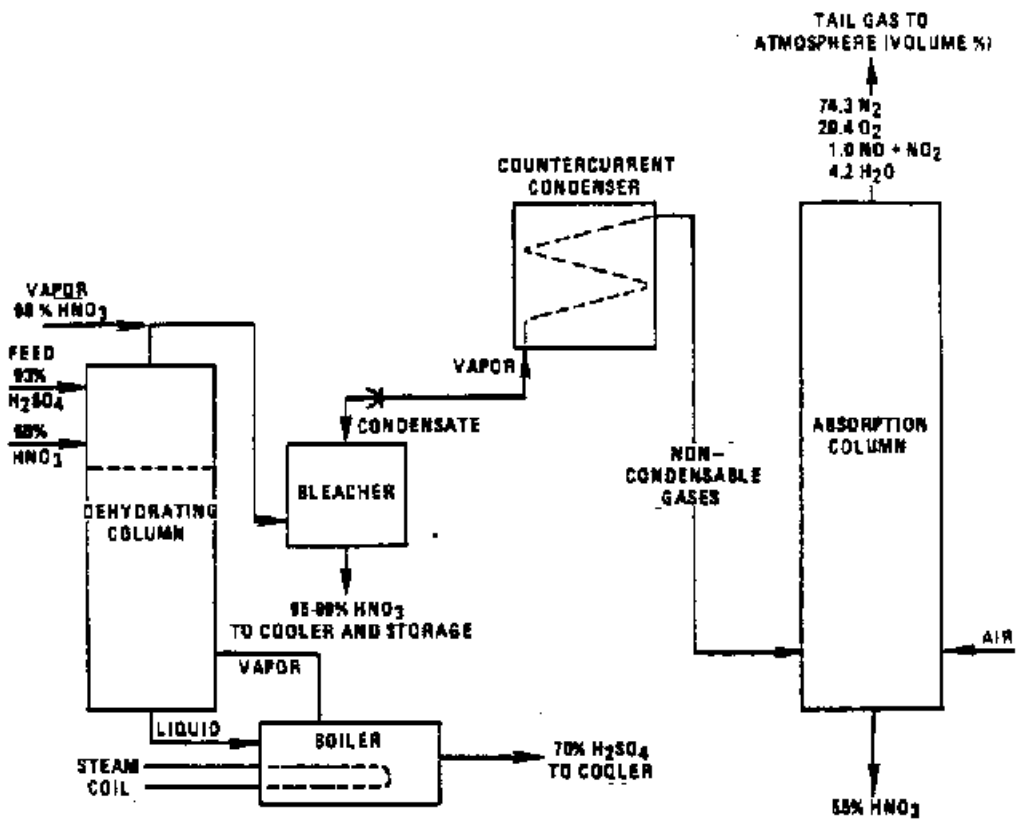

Figure 3-4. Nitric acid concentration using extractive distillation.[13]

. Strong sulfuric acid (typically 60 percent concentration) mixed with 55 to 65 percent nitric acid enters the top of a packed tower and flows countercurrent to ascending vapors. Ninety-nine percent nitric acid vapor containing small amounts of NO_x is recovered at the top of the tower. The vapors are then bleached and condensed, leaving weak nitric acid, NO_x, and oxygen. The gases are subsequently passed to an absorber, where they are converted to nitric acid and recovered.[2,8]

The direct strong nitric acid process (DSN) produces concentrated nitric acid directly from ammonia. While several DSN processes exist, the Uhde process has demonstrated commercial application in the United States. The Uhde process is shown in Figure 3-5

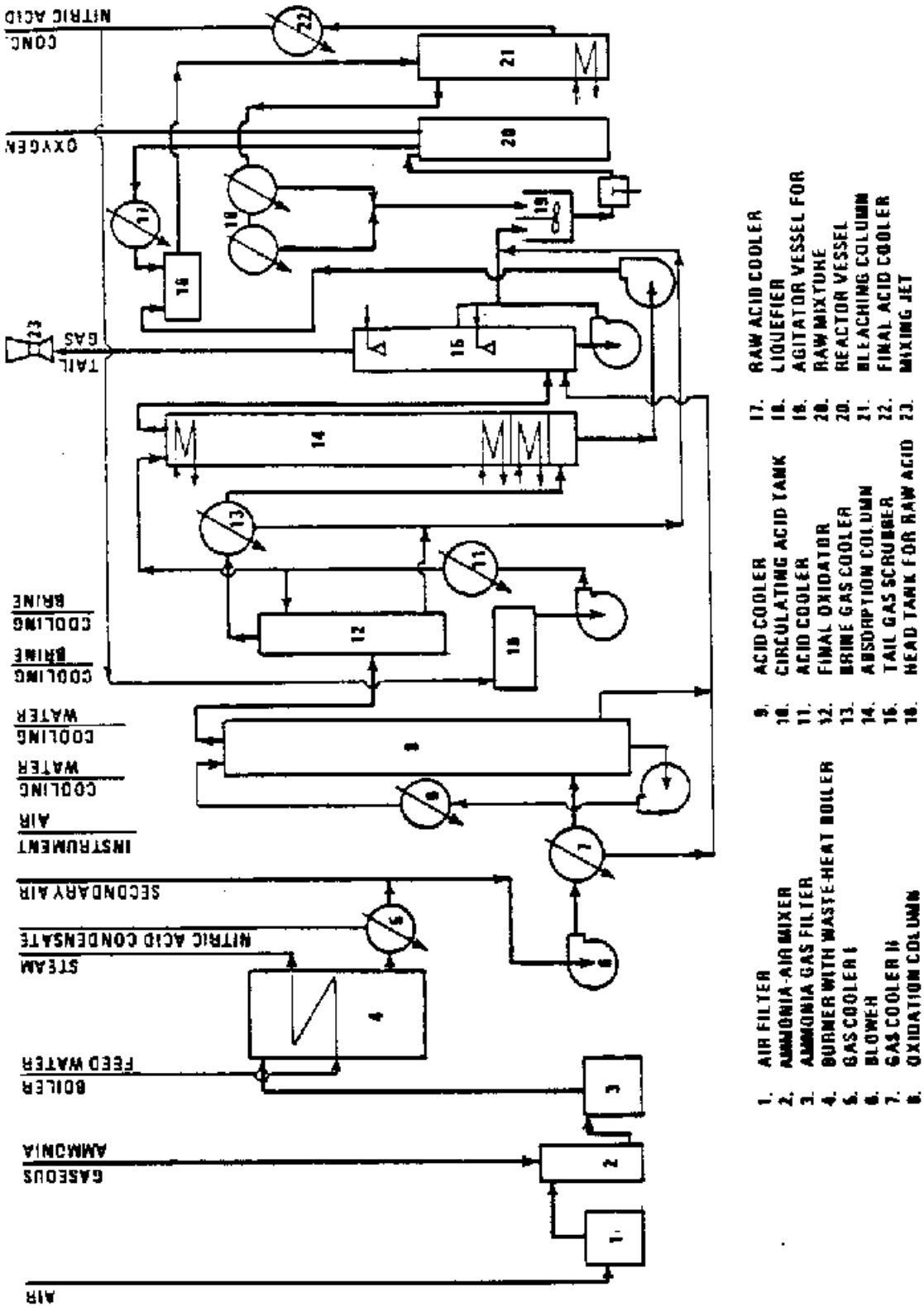

Figure 3-5. Nitric acid concentration using the direct strong nitric process (Uhde process).[14]

. Air and gaseous ammonia are mixed and reacted. Heat of reaction produces steam in the burner/waste-heat boiler. Upon cooling, the reaction products condense to form weak nitric acid. After separating the liquid nitric acid, the remaining NO is oxidized to NO_2 by passing through two oxidizing columns. The vapors are then compressed and cooled to form liquid dinitrogen tetroxide. At a pressure of 5 MPa (50 atm), the liquid N_20_4 reacts with 0_2 to form strong nitric acid of 95 to 99 percent concentration. Because NO_x from the absorber is a valuable raw material, tail gas emissions are scrubbed with water and condensed N_20_4. The scrubber effluent is then mixed with the concentrated acid from the absorber column. The combined product is oxidized in the reactor vessel, cooled, and bleached, producing concentrated nitric acid.[8]

3.1 ADIPIC ACID MANUFACTURING

Adipic acid, $COOH-(CH_2)_3-COOH$, was the 48th-highest-volume chemical produced in the United States in 1985 and is considered one of the most important commercially available aliphatic dicarboxylic acids. Typically, it is a white crystalline solid, soluble in alcohol and acetone.[15]

3.2.1 Uses and Industry Characterization

Ninety percent of adipic acid manufactured in the United States is used to produce nylon 6/6 fiber and plastics. Esters used for plasticizers and lubricants are the next largest consumer. Small quantities of adipic acid are also used as food acidulants.[8,16]

There are four adipic acid manufacturing facilities in operation: (1) Allied-Signal, Inc., in Hopewell, Virginia, with an annual production capacity of 15,000 tons; (2,3) DuPont Chemicals in Orange and Victoria, Texas, with annual production capacities of 190,000 and 350,000 tons, respectively; and (4) Monsanto Chemical Company in Pensacola, Florida, with an annual production capacity of 300,000 tons.[5] Total annual production reached 865,000 tons in 1989.[17]

3.2.2 Production Process

Two methods of producing adipic acid are currently in use. The basic process is shown in Figure 3-6

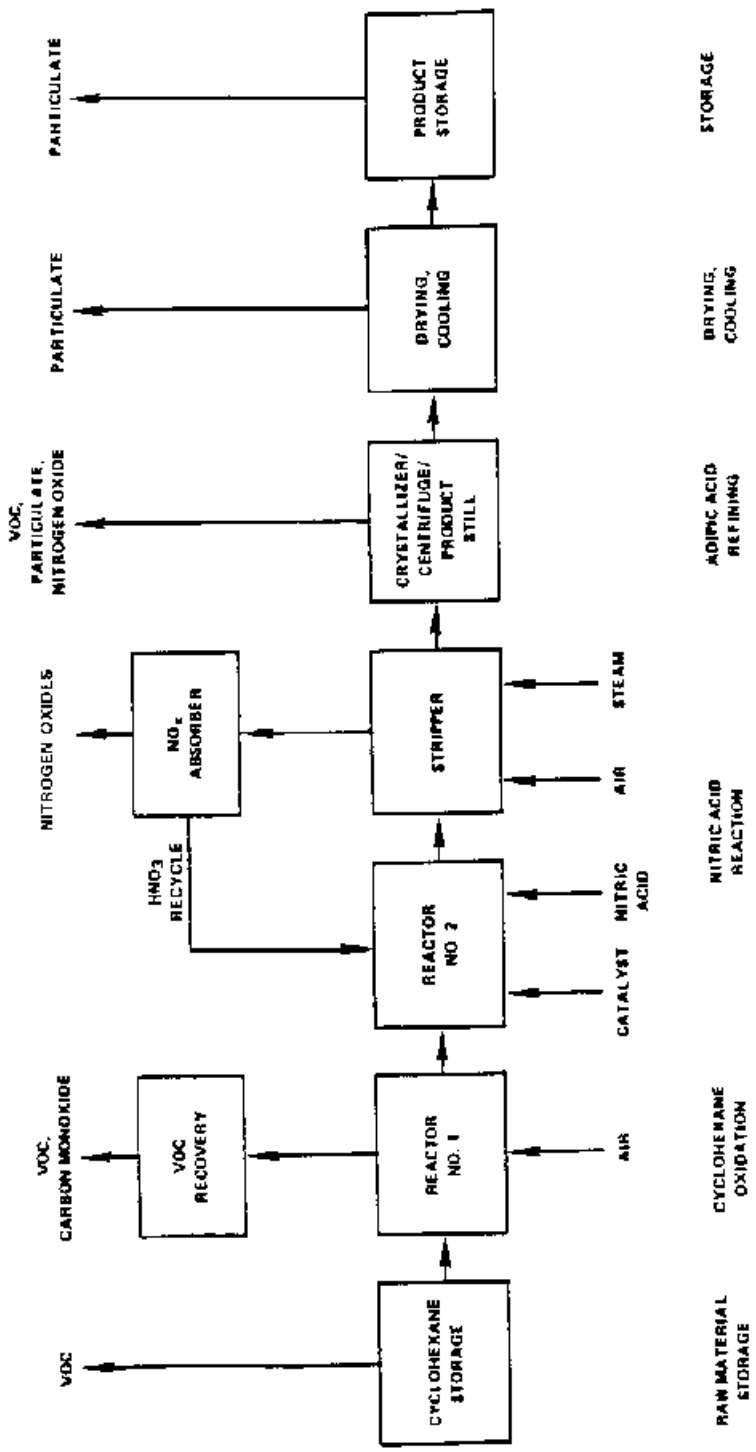

Figure 3-6. Basic adipic acid manufacturing process.[18]

. Ninety-eight percent of adipic acid produced in the United States is manufactured from cyclohexane in a continuous operation. Cyclohexane is air-oxidized, producing a cyclohexanol-cyclohexanone (ketone-alcohol, or KA) mixture. This mixture is then catalytically oxidized using 50 to 60 percent nitric acid, producing adipic acid. Phenol hydrogenation followed by nitric acid oxidation is the lesser-used method.[8,16]

3.2.2.1 <u>Oxidation of Cyclohexane</u>. In commercial use, two approaches predominate the air oxidation of cyclohexane process: cobalt-catalyzed oxidation and borate-promoted oxidation. A third method, the high-peroxide process, has found limited commercial use.

Cobalt-catalyzed air oxidation of cyclohexane is the most widely used method for producing adipic acid. Cyclohexane is oxidized with air at 150° to 160°C (302° to 320°F) and 810 to 1,013 kPa (about 8 to 10 atm) in the presence of the cobalt catalyst in a sparged reactor or multistaged column contactor. Several oxidation stages are usually necessary to avoid over-oxidizing the KA mixture. Oxidizer effluent is distilled to recover unconverted cyclohexane then recycled to the reactor feed. The resultant KA mixture may then be distilled for improved quality before being sent to the nitric acid oxidation stage. This process yields 75 to 80 mole percent KA, with a ketone to alcohol ratio of 1:2.[16]

Borate-promoted oxidation demonstrates improved alcohol yields. Boric acid reacts with cyclohexanol to produce a borate that subsequently decomposes to a thermally stable borate ester, highly resistant to further oxidation or degradation. Another key feature of the borate-promoted oxidation system is the removal of byproduct water from the reactors using inert gas and hot cyclohexane vapor. Reaction yields of 87 percent and a K:A ratio of 1:10 have been achieved.[16]

The high-peroxide process is an alternative to maximizing selectivity. Noncatalytic oxidation in a passivated reactor results in maximum production of cyclohexylhydroperoxide. This

is followed by controlled decomposition to KA. Achievable reaction yield is as high as 84 percent KA.[16]

3.2.2.2 <u>Phenol Hydrogenation</u>. Phenol hydrogenation is another method of producing cyclohexanol and cyclohexanone. Molten phenol is typically hydrogenated at 140°C (284°F) and 200 to 1800 kPa (2 to 18 atm) hydrogen pressure over a nickel, copper, or chromium oxide catalyst. These catalysts predominantly yield cyclohexanol. Cyclohexanone, typically an intermediate product for manufacturing caprolactam, is favored by using a palladium catalyst. Cyclohexanol yield is typically 97 to 99 percent; however, given sufficient reactor residence time, conversion efficiency of 99+ percent is achievable.[16,19,20]

3.2.2.3 <u>Nitric Acid Oxidation of Cyclohexanol-Cyclohexanone</u>. The second step in commercial production of adipic acid is nitric acid oxidation of the cyclohexanol-cyclohexanone mixture. The reaction proceeds as follows:[8]

$$\text{cyclohexanol} + \text{nitric acid} \rightarrow \text{adipic acid} + NO_2 + H_2O + \text{heat}$$

$$\text{cyclohexanone} + \text{nitric acid} \rightarrow \text{adipic acid} + NO_x + H_2O + \text{heat}$$

As the reaction is highly exothermic, heat of reaction is usually dissipated by maintaining a high ratio (40:1) of nitric acid to KA mixture.[19]

Nitric acid (50 to 60 percent) and a copper-vanadium catalyst are reacted with the KA mixture in a reactor vessel at 60° to 80°C and 0.1 to 0.4 MPa. Conversion yields of 92 to 96 percent are attainable when using high-purity KA feedstock. Upon reaction, nitric acid is reduced to nitrogen oxides: NO_2, NO, N_2O, and N_2. The dissolved oxides are stripped from the reaction product using air in a bleaching column and subsequently recovered as nitric acid in an absorption tower.[16,19]

The stripped adipic acid/nitric acid solution is chilled and sent to a crystallizer, where crystals of adipic acid are formed. The crystals are separated from the mother liquor in a centrifuge

and transported to the adipic acid drying and/or melting facilities. The mother liquor is separated from the remaining uncrystallized adipic acid in the product still and recycled to the reactors.

3.3 REFERENCES

1. Keleti, C. (ed.). The History of Nitric Acid. In: Nitric Acid and Fertilizer Nitrates. New York, Marcel Dekker, Inc. 1985. pp. 2, 19-23.

2. Newman, D.J. Nitric Acid. In: Kirk-Othmer Encyclopedia of Chemical Technology. New York, John Wiley & Sons. 1981. pp. 853-871.

3. Control Techniques for Nitrogen Oxides Emissions From Stationary Sources: Revised 2nd Edition. U. S. Environmental Protection Agency. Research Triangle Park, NC. Publication No. EPA-450/3-83-002. January 1983. Ch. 6: pp. 35-46.

4. Review of New Source Performance Standards for Nitric Acid Plants. U. S. Environmental Protection Agency. Research Triangle Park, NC. Publication No. EPA-450/8-84-011. April 1984. Ch. 2: pp. 1-13.

5. SRI International. Directory of Chemical Producers, United States of America. Menlo Park, CA. 1990. pp. 809-811.

6. Inorganic Fertilizer Materials and Related Products. In: Current Industrial Reports. U.S. Department of Commerce, Bureau of Census. Washington, DC. 1988. 3 pp.

7. Nitric Acid Plant Inspection Guide. Prepared for U. S. Environmental Protection Agency. Research Triangle Park, NC. Publication No. EPA-340/1-84-013. August 1984. p. 9.

8. Reference 1, pp. 31-71.

9. Ohsol, E.O. Nitric Acid. In: Encyclopedia of Chemical Processing and Design, J. J. McKetta and W. A. Cunningham (eds.). New York, Marcel Dekker, Inc. 1990. pp. 150-155.

10. Nitric Acid Plant Inspection Guide. U. S. Environmental Protection Agency. Research Triangle Park, NC. Publication No. EPA-340/1-84-013. August 1984.

11. Reference 4, p. 7.

12. Reference 4, p. 9.

13. Reference 3, p. 8

14. Reference 3, p. 9.

15. Sax, N.I., and R.J. Lewis, Sr. (eds.). Hawley's Condensed Chemical Dictionary. New York, Van Nostrand Reinhold Company. 1987. p. 24.

16. Adipic Acid. In: Encyclopedia of Chemical Technology, Kirk-Othmer. New York, John Wiley & Sons. 1978. pp. 513-528.

17. Adipic Acid. In: Synthetic Organic Chemicals, U.S. Sales and Production. U.S. International Trade Commission. Washington, DC. 1989. 1 p.

18. Compilation of Air Pollutant Emission Factors: Volume 1: Stationary Point and Area Sources. U. S. Environmental Protection Agency. Research Triangle Park, NC. Publication No. AP-42. September 1985. p. 5.1-2.

19. Luedeke, V.D. Adipic Acid. In: Encyclopedia of Chemical Processing and Design, J. J. McKetta and W. A. Cunningham (eds.). New York, Marcel Dekker, Inc. 1977. pp. 128-146.

20. Cyclohexanol/Cyclohexanone. In: Organic Chemical Manufacturing: Volume 6: Selected Processes. U. S. Environmental Protection Agency. Research Triangle Park, NC. Publication No. EPA-450/3-80-028a. December 1980. pp. III-2-7.

21. Screening Study to Determine Need for Standards of Performance for New Adipic Acid Plants: Final Report. GCA/Technology Division. Bedford, MA. Publication No. GCA-TR-76-16-G. July 1976. p. 12.

4.0 CHARACTERIZATION OF NO_x EMIS

This section presents a description of NO_x formation and emission levels from nitric and adipic acid manufacturing. Section 4.1 describes uncontrolled NO_x emissions from nitric acid manufacturing. The uncontrolled NO_x emissions from manufacturing adipic acid are described in Section 4.2.

4.1 NO_x EMISSIONS FROM NITRIC ACID MANUFACTURING

Nitric acid production is one of the larger chemical industry sources of NO_x. Unlike NO_x found in combustion flue gas, NO_x from nitric acid production is part of the process stream and is recoverable with some economic value. Vent gas containing NO_x is released to the atmosphere when the gas becomes too impure to recycle or too low in concentration for recovery to be economically practical.[1]

Section 4.1.1 describes how NO_x is formed as a result of the basic ammonia oxidation process of nitric acid manufacturing. Several factors affect the level of NO_x emissions from a typical nitric acid plant. These factors are presented in Section 4.1.2. Finally, Section 4.1.3 discusses the sources of NO_x emissions and typical levels of uncontrolled NO_x emissions. Furthermore, this section describes how tail gas plume color and opacity are related to the level of NO_x in the gas.

4.1.1 <u>NO_x Formation</u>

The chemical reactions for each of the nitric acid production process steps (Chapter 3) demonstrate that NO_x must first be created before nitric acid can be produced. The first reaction,

$$4NH_3 + 5O_2 \rightarrow 4NO + 6H_2O + \text{heat}, \qquad \text{Eq. 1}$$

shows NO forming from the reaction of NH_3 and air. The NO is then oxidized in the second step,

$$2NO + O_2 \rightarrow 2NO_2 \rightleftarrows N_2O_4 + \text{heat}, \qquad \text{Eq. 2}$$

producing NO_2. The NO_2 is subsequently absorbed in water to produce nitric acid. However, as the absorption reaction,

$$3NO_2(g) + H_2O(P) \rightleftarrows 2HNO_3(aq) + NO(g) + \text{heat}, \qquad \text{Eq. 3}$$

shows, one mole of NO is produced for every three moles of NO_2 absorbed, making complete absorption of the NO_x impossible. The unabsorbed NO_x, if not controlled, is emitted in the absorber tail gas.

4.1.2 Factors Affecting NO_x Emission Levels

Many interrelated factors affect the efficiency of the absorber and the level of uncontrolled NO_x emissions. These factors are described below.

As noted in the previous section, the production of nitric acid necessarily results in the formation of NO. Using bleacher air, NO must be reoxidized to NO_2 prior to being reabsorbed. Two limiting factors are present. First, reoxidation of NO to NO_2 is a very slow reaction. As more air is added, the reaction becomes increasingly slower as the reactants become diluted with excess nitrogen. Second, increased temperatures due to the exothermic absorption reaction tend to reverse the reaction equation (Equation 3).[2] These factors impose economic limits on absorption efficiency and, consequently, must be addressed when considering absorber design.

Maximum absorber efficiency is a primary concern of process designers. Higher absorber efficiency translates to lower NO_x emissions. Maximum efficiency is achieved by operating at low temperatures, high pressure, low throughput, and low acid strength with a long residence time.[2] Altering any of these design criteria affects the level of NO_x emissions. Furthermore, proper operation and maintenance practices are vital to minimizing NO_x emissions.

Low temperature (less than 38°C [100°F]) is a key factor for high absorption efficiency but is also one that is difficult and

expensive to control.[3] The difficulty of maintaining a low temperature arises from the addition of heat from two sources: heat of reaction and ambient heat. Heat from the exothermic absorption reaction is carried away by cooling water that is circulated through the absorption tower. However, high ambient temperature reduces the heat removal capacity of heat transfer equipment.[4] This, in turn, reduces absorber efficiency and increases NO_x emissions.

Operating pressure is another important consideration for increasing absorber efficiency. Gas volume in the tower contracts as the absorption reaction proceeds; therefore, completion of the reaction is aided by increased pressure.[2] As mentioned in Chapter 3, most new nitric acid plants use high pressure (800 to 1,400 kPa [8 to 14 atm]) in the absorption tower to increase absorber efficiency.

Nitric acid plants are designed for a specified production rate, or throughput. Throughput ranges from 50 to 1,000 tons per day (100 percent nitric acid). Operating outside of the optimal throughput affects the levels of NO_x emissions. Increasing the production rate typically increases the NO_x emission rate by decreasing residence time in the absorption tower. Typical residence time for absorption of NO_x in water is on the order of seconds for NO_2 absorption and minutes for $NO+O_2$ absorption reaction (NO does not absorb into water).[5] Decreasing the residence time minimizes the oxidation of NO to NO_2 and decreases the absorption of NO_2. Conversely, operating below design throughput increases residence time, and lower NO_x emissions would be expected.[6]

It is not always true that NO_x emissions are a function of plant rate. Since the hot gas expander acts as a restriction device in the tail gas system, increasing the rate actually increases the pressure and conversely lowers emissions because of greater absorption efficiency. The absorber volume requirement is a function of the cube of the absorber pressure; therefore, unless the tail gas is vented or bypassed around the expander,

NO_x will be lower leaving the absorber if all other variables remain the same.[7]

Acid strength is another factor designed into the process. Increasing acid strength beyond design specifications (e.g., 60 percent nitric acid) typically increases NO_x emissions. Lower emissions would be expected from reduced acid strength.[6]

Finally, good maintenance practices and careful control of operations play important roles in reducing emissions of NO_x. Repairing internal leaks and performing regular equipment maintenance help to ensure that NO_x levels are kept to a design minimum.[1]

4.1.3 Uncontrolled NO_x Emission Levels

The main source of atmospheric NO_x emissions from nitric acid manufacturing is the tail gas from the absorption tower.[1,6,8] Uncontrolled NO_x emission levels vary from plant to plant due to differences in plant design and other factors previously discussed. Typically uncontrolled emission levels of 3,000 ppm (with equal amounts of NO and NO_2) are found in low-pressure (atmospheric) plants. Medium- and high-pressure plants exhibit lower uncontrolled emission levels, 1,000 to 2,000 ppm, due to improved absorption efficiency.[6,8,9] These levels apply to single- and dual-pressure plants.

Typical uncontrolled NO_x emissions factors range from 7 to 43 kg/Mg (14 to 86 lb/ton) of acid (expressed as 100 percent HNO_3).[9] This range includes atmospheric, medium-, and high-pressure plants. Factors that affect the emission rate are discussed in Section 4.1.2. The average emission factor (from AP-42) for uncontrolled tail gas emissions is 22 kg/Mg (43 lb/ton) of acid.[9] As discussed in Chapter 3 (Section 3.1.3.1), atmospheric plants operate only in a standby capacity and no new atmospheric plants are likely to be built. Using the average NO_x concentration (1,500 ppm) for medium- and high-pressure plants, an uncontrolled NO_x emission factor of 10 kg/metric ton (20 lb/ton) can be calculated. This emission factor will be used throughout this text for uncontrolled NO_x emissions from nitric acid plants. This emission factor is

typical for steady-state, continuous operation. Startups, shutdowns, and malfunctions increase the uncontrolled emission levels.[6] A typical NO_x emission level from concentrated nitric acid production is 5 kg/Mg (10 lb/ton) of 98 percent nitric acid.[9]

Color and opacity of the tail gas plume are indicators of the presence and concentration of NO_x, specifically NO_2 (NO is colorless). A reddish-brown plume reveals the presence of NO_2. Plume opacity is directly related to NO_2 concentration and stack diameter. The rule of thumb is that the stack plume has a reddish-brown color when the NO_2 concentration exceeds 6,100 ppm divided by the stack diameter in centimeters.[1]

Nitrogen oxides emissions may occur during filling of storage tanks.[9] However, there is no information on the magnitude of these emissions.

4.2 NO_x EMISSIONS FROM ADIPIC ACID MANUFACTURING

Nitrogen oxides created in the adipic acid production process, like those created in the production of nitric acid, are considered part of the process stream and are recoverable with some economic value. Tail gas from the NO_x absorber is released to the atmosphere when the gas becomes too low in concentration for recovery to be economically practical.

Section 4.2.1 describes how NO_x is formed as a result of the KA oxidation process (using nitric acid) used in producing adipic acid. Factors affecting the level of uncontrolled NO_x emissions in the absorber tail gas are discussed in Section 4.2.2. Section 4.2.3 describes the source of NO_x emissions and presents data showing typical levels of uncontrolled NO_x emissions.

4.2.1 <u>NO_x Formation</u>

Adipic acid is produced by oxidizing a ketone-alcohol mixture (cyclohexanone-cyclohexanol) using nitric acid as follows:[10,11]

Cyclohexanone + nitric acid → adipic acid + NO_x + water Eq. 1

Cyclohexanol + nitric acid → adipic acid + NO_x + water Eq. 2

The oxidation process creates oxides of nitrogen in the form of NO, NO_2, and N_2O, with some N_2 also forming.[11,12]

The NO_x is stripped from the reaction product using air in a bleaching column, and NO and NO_2 are subsequently recovered as nitric acid in an absorption tower. The N_2 and N_2O are released to the atmosphere. The absorption tower functions in the same manner as the absorption tower used in the nitric acid production process. Nitrogen oxides, entering the lower portion of the absorber, flow countercurrent to a water stream, which enters near the top of the absorber. Unabsorbed NO_x is vented from the top while diluted nitric acid is withdrawn from the bottom of the absorber and recycled to the adipic acid process.

4.2.2 Factors Affecting NO_x Emission Levels

The absorption tower used in adipic acid production functions in the same manner as the NO_x absorber used in nitric acid production. Consequently, factors affecting uncontrolled NO_x emissions from both absorbers are expected to be similar. These factors are described in detail in Section 4.1.2 and include the following: high absorber pressure, low temperature in the absorber, long residence time, and low throughput.

4.2.3 Uncontrolled NO_x Emission Levels

The main source of atmospheric NO_x emissions from adipic acid manufacturing is the tail gas from the absorption tower.[10,11] Other sources of NO_x emissions include nitric acid storage tanks and off-gas from the adipic acid refining process. However, NO_x emissions from these two sources are minor in comparison. All four adipic acid manufacturing plants were contacted in order to obtain uncontrolled NO_x emissions data. The data received did not contain any uncontrolled NO_x emissions factors. However, one plant did report uncontrolled NO_x concentrations of 7,000 parts per million by volume (ppmv) in the tail gas of the KA oxidation absorber.[13] The 1976 screening study reported uncontrolled NO_x emission rates for two plants (capacities of 150,000 and 175,000 tons/yr of adipic acid) as 1,080 and 1,400 pounds per hour.[5]

The AP-42 cites an emission factor of 27 kg per metric ton of adipic acid produced (53 lb/ton) for uncontrolled NO_x emissions in the absorption tower tail gas.[14] This emission

factor represents NO_x in the form of NO and NO_2 only. Large quantities of nitrous oxide (N_2O) are also formed during the oxidation process. The effect of N_2O on the ozone layer is currently under investigation by the Air and Energy Engineering Research Laboratory. However, one plant reports that the N_2O produced at that facility is recovered by a private company to be used in dental offices.[15]

The adipic acid refining process, which includes chilling, crystallizing, and centrifuging, is a minor source of NO_x emissions. The AP-42 cites an uncontrolled NO_x emission factor of 0.3 kg per metric ton (0.6 lb/ton) of adipic acid produced for the refining process.[9] No emissions factor for the nitric acid storage tanks was reported; however, one plant cited an uncontrolled NO_x concentration of 9,000 ppmv.[13]

4.3 REFERENCES

1. Control Techniques for Nitrogen Oxides Emissions From Stationary Sources: Revised 2nd Edition. U.S. Environmental Protection Agency. Research Triangle Park, NC. Publication No. EPA-450/3-83-002. January 1983. Chapter 6: pp. 1, 10-11.

2. Blackwood, T. R., and B. B. Crocker. Source Control—Chemical. In: Handbook of Air Pollution Control Technology, S. Calvert and H. M. Englund (eds.). New York, John Wiley and Sons. 1984. p. 654.

3. Ohsol, E. O., Nitric Acid. In: Encyclopedia of Chemical Processing and Design, J. J. McKetta and W. A. Cunningham (eds.). New York, Marcel Dekker, Inc. 1990. pp. 150-155.

4. Telecon. Vick, K., Farmland Industries, with Lazzo, D., Midwest Research Institute. February 27, 1991. NO_x controls for nitric acid plants.

5. Screening Study to Determine Need for Standards of Performance for New Adipic Acid Plants: Final Report. GCA/Technology Division. Bedford, MA. Publication No. GCA-TR-76-16-G. July 1976. p. 34

6. Nitric Acid Plant Inspection Guide. U. S. Environmental Protection Agency. Research Triangle Park, NC. Publication No. EPA-340/1-84-013. August 1984.

7. Letter from Boyd, D. E., Weatherly, Inc., to Neuffer, B., EPA/ISB. October 9, 1991. Comments on draft ACT.

8. Review of New Source Performance Standards for Nitric Acid Plants. U. S. Environmental Protection Agency. Research Triangle Park, NC. Publication No. EPA-450/8-84-011. April 1984. Chapter 2: pp. 10, 11.

9. Compilation of Air Pollutant Emission Factors: Volume I: Stationary Point and Area Sources. U. S. Environmental Protection Agency. Research Triangle Park, NC. September 1985. Section 5.9:pp. 1-6.

10. Reference 1, pp. 6-39.

11. Reference 4, p. 11.

12. Luedeke, V. D. Adipic Acid. In: Encylopedia of Chemical Processing and Design, J. J. McKetta and W. A. Cunningham (eds.). New York, Marcel Dekker, Inc. 1977. p. 137.

13. Response to questionnaire from Miller, M., E.I. DuPont de Nemours and Company, to Neuffer, B., EPA/ISB. June 18, 1991. NO_x controls for adipic acid plants.

14. Reference 7, p. 5.1-4.

15. Telecon. McCloud, B., Monsanto Chemical Company, with Neuffer, B., EPA/ISB. April 10, 1991. NO_x controls for adipic acid plants.

5.0 CONTROL TECHNIQUES FOR NITROGEN OXIDES FROM NITRIC/ADIPIC ACID MANUFACTURING

This chapter describes the techniques used to control NO_x emissions from nitric and adipic acid manufacturing plants. Section 5.1 discusses control techniques for nitric acid manufacturing and Section 5.2 discusses control techniques for adipic acid manufacturing. Each of these sections describes the control techniques, discusses factors affecting the performance of each control, and presents data illustrating the achieved levels of control for each device.

5.1 NITRIC ACID MANUFACTURING

Several control techniques have been demonstrated that reduce NO_x emissions from nitric acid manufacturing plants. Of the available control techniques, three methods are used predominantly: (1) extended absorption, (2) nonselective catalytic reduction (NSCR), and (3) selective catalytic reduction (SCR). All three of these control techniques are suitable for new and existing plant applications. Sections 5.1.1, 5.1.2, and 5.1.3 describe these control techniques, discuss factors affecting their performance, and provide data that demonstrate the level of achievable NO_x control. In Section 5.1.4, a table is presented that summarizes the level of control and control efficiency. Section 5.1.5 briefly describes other NO_x control techniques with more limited use: (1) wet chemical scrubbing (ammonia, urea, and caustic), (2) chilled absorption (CDL/VITOK and TVA), and (3) molecular sieve adsorption.

5.1.1 Extended Absorption

Extended absorption reduces NO_x emissions by increasing absorption efficiency and is achieved by either installing a

single large tower, extending the height of an existing absorption tower, or by adding a second tower in series with the existing tower.[1] Increasing the volume and the number of trays in the absorber results in more NO_x being recovered as nitric acid (1 to 1.5 percent more acid) and reduced emission levels.[2] Extended absorption can be applied to new and existing plants; however, it is considered an add-on control only when applied to existing plants. Typically, retrofit applications involve adding a second tower in series with an existing tower. New plants are generally designed with a single large tower that is an integral component of the new plant design. New nitric acid plants have been constructed with absorption systems designed for 99.7+ percent NO_x recovery.[1]

The following sections discuss extended absorption used as a NO_x control technique for nitric acid plants. Section 5.1.1.1 describes single- and dual-tower extended absorption systems. Factors affecting the performance of extended absorption are discussed in Section 5.1.1.2; and Section 5.1.1.3 presents emissions test data and discusses NO_x control performance.

5.1.1.1 <u>Description of Extended Absorption Systems</u>. Figure 5-1

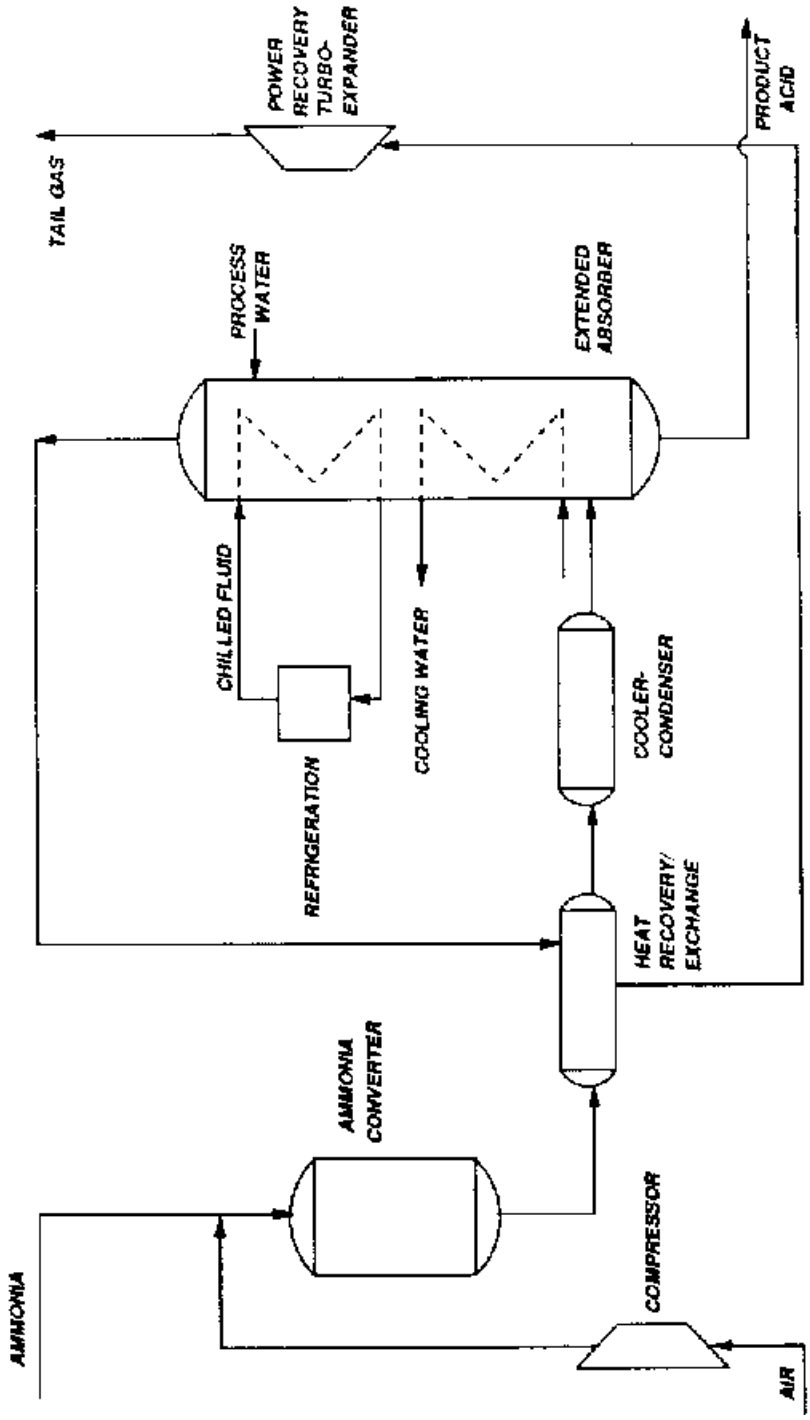

Figure 5-1. Extended absorption system using one large absorber for NO_x control at nitric acid plants.[4]

is a flow diagram for a typical nitric acid plant with an extended absorption system using a single large (typically 100 to 130 feet tall) tower.[1,3] Following the normal ammonia oxidation process as described in Chapter 3, NO_x is absorbed in the "extended" absorption tower. The lower portion (approximately 40 percent of the trays) of the tower is cooled by normal cooling water available at the plant site. The remaining trays are cooled by water or coolant to approximately 2° to 7°C (37° to 45°F), which is usually achieved by a closed-loop refrigeration system using Freon or part of the plant ammonia vaporization system.[1,5,6] Absorber tail gas is then heated in a heat exchanger, which utilizes the heat of the ammonia conversion reaction. The heat is subsequently converted to power in a turboexpander.

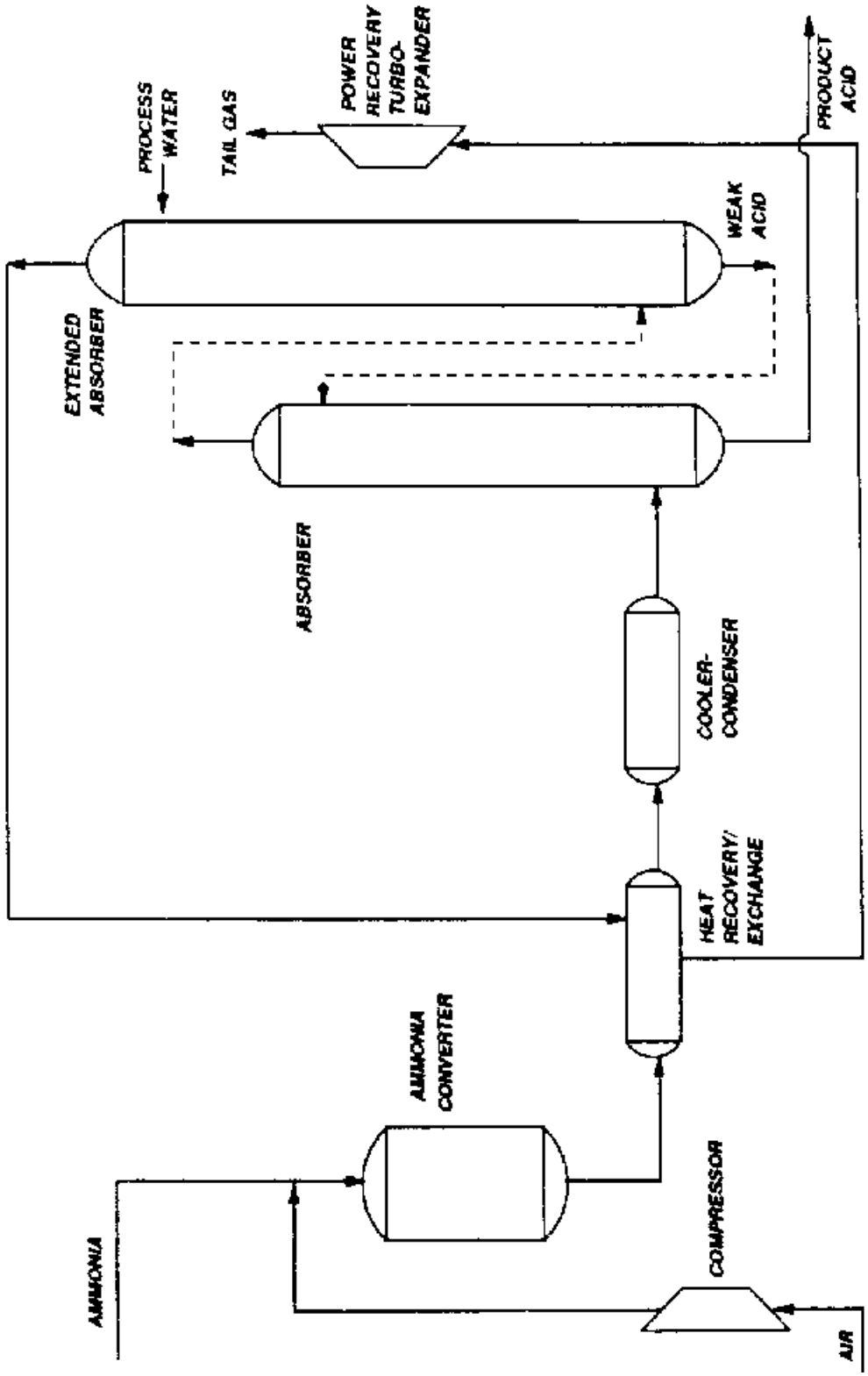

Figure 5-2. Extended absorption system using second absorber for NO_x control at nitric acid plants.[7]

is a flow diagram for a nitric acid plant with an extended absorption system using a second absorption tower. The second tower is the "extended" portion of the absorption system. Following the normal ammonia oxidation process as described in Chapter 3, NO_x is absorbed in the first absorption tower. The tail gas from the first absorber is routed to the base of the second absorber. As the gas flows countercurrent to the process water in the second absorber, the remaining NO_x is absorbed to form additional nitric acid. The weak acid from the second absorber is then recycled to the upper trays of the first absorber. Consequently, no liquid effluent waste is generated. The weak acid entering the top of the first tower absorbs rising NO_x gases, producing the product nitric acid. Tail gas from the second absorber is heated in a heat exchanger and recovered as power generated in a turboexpander. In order to minimize the size of the second absorption tower, inlet gas to the first absorber is generally pressurized to at least 730 kPa (7.3 atm) and additional cooling is provided. One company's process uses two cooling water systems to chill both absorbers. The entire second absorber and approximately one-third of the trays of the first absorber are cooled by refrigerated water at about 7°C (45°F). The remaining trays in the first absorber are cooled by normal plant cooling water.[1,5,8]

5.1.1.2 <u>Factors Affecting Performance</u>. Specific operating parameters must be precisely controlled in order for extended absorption to reduce NO_x emissions significantly. Because this control technique is essentially an extension of the absorber, a component common to all weak nitric acid production processes, the factors that affect its performance are the same as those that affect uncontrolled emissions levels as discussed in detail in Chapter 4. These factors include maximum NO_x absorption efficiency achieved by operating at low temperature, high pressure, low throughput and acid strength (i.e., throughput and acid concentration within design specifications), and long residence time.

5.1.1.3 **Performance of Extended Absorption**. Table 5-1

TABLE 5-1. NITROGEN OXIDES EMISSIONS FROM NITRIC ACID PLANTS USING EXTENDED ABSORPTION[10]

Plant	Absorber	Absorber inlet pressure, atm	Nitric acid production rate, tons/d	Acid strength, %	Average emission factor lb/ton acid	Control efficiency, %[a]
C	Single	9	271	56	1.3	97
D	Single	9	538	57	2.75	93.6
G	Single	NA	375	62	2.55	94
I	Single	NA	300	55	2.74	93.6
J	Single	9	530	56	2.13	95
H	Dual	9	1,056	54	2.81	93.5
E	Dual	7	220	57	1.8	96

NA = not available.
[a]These figures calculated using average uncontrolled emissions level of 43 lb/ton (from AP-42).
Notes: The following are provided for comparative purposes.

1. From AP-42, NO_x emission levels from nitric acid plants
   a. Emissions:
      uncontrolled--22 kg/metric ton; 43 lb/ton
      extended absorption--0.9 kg/metric ton; 1.8 lb/ton
   b. Control efficiency:
      uncontrolled--0%
      extended absorption--95.8%

2. From NSPS, allowable NO_x emission levels from nitric acid plants
   Emissions:
      1.5 kg/metric ton; 3.0 lb/ton

illustrates the levels to which extended absorption can reduce NO_x emissions from nitric acid plants. The emission factors are based on compliance tests (using EPA Method 7) performed on seven new plants using extended absorption that are subject to the new source performance standards (NSPS) since the 1979 review. Actual production capacities during testing ranged from 200 to 960 metric tons (220 to 1,060 tons per day [tons/d]) expressed as 100 percent nitric acid. Acid concentration is similar for six of the plants, ranging from 54 to 57 percent, while one plant produces acid at a concentration of 62 percent. Five plants operate with a single large absorption tower, and two use a second tower.

The emission factors range from 0.59 to 1.28 kg of NO_x per metric ton (1.3 to 2.81 lb/ton). No trends are indicated relating NO_x emission levels to plant size, production capacity, or acid strength. Additionally, there is no correlation between absorber design (single vs. dual) and controlled emission levels. However, the emissions data do illustrate the effectiveness of extended absorption on reducing NO_x emissions. From AP-42, the average uncontrolled emissions level for nitric acid plants is 22 kg per metric ton (43 lb/ton) of nitric acid.[9] Furthermore, AP-42 gives an average control efficiency of 95.8 percent for extended absorption. From the emissions data in Table 5-1, the control efficiency for extended absorption at the seven plants ranges from 93.5 to 97 percent. For further comparison, the data demonstrate that for all seven plants, extended absorption reduces NO_x emissions below the NSPS level of 1.5 kg per metric ton (3.0 pounds per ton).

5.1.2 Nonselective Catalytic Reduction

Nonselective catalytic reduction uses a fuel and a catalyst to (1) consume free oxygen in the absorber tail gas, (2) convert NO_2 to NO for decolorizing the tail gas, and (3) reduce NO to elemental nitrogen. The process is called nonselective because the fuel first depletes all the oxygen present in the tail gas and then removes the NO_x. Nonselective catalytic reduction was widely used in new plants between 1971 and 1977. It can achieve

higher NO_x reductions than can extended absorption. However, rapid fuel price escalations caused a decline in the use of NSCR for new nitric acid plants, many of which opted for extended absorption.

Despite the associated high fuel costs, NSCR offers advantages that continue to make it a viable option for new and retrofit applications. Flexibility adds to the attractiveness of NSCR, especially for retrofit considerations. An NSCR unit generally can be used in conjunction with other NO_x control techniques. Furthermore, NSCR can be operated at any pressure.[5] Additionally, heat generated by operating an NSCR unit can be recovered in a waste heat boiler and a tail gas expander. The heat recovered can supply the energy for process compression needs with additional steam available for export.[11]

The following sections discuss NSCR used as a NO_x control technique for nitric acid plants. Section 5.1.2.1 describes an NSCR system including its components and operation. Factors affecting the performance of NSCR units are discussed in Section 5.1.2.2, while Section 5.1.2.3 presents data and discusses NO_x control performance.

5.1.2.1 <u>Description of Nonselective Catalytic Reduction Systems</u>. Figure 5-3

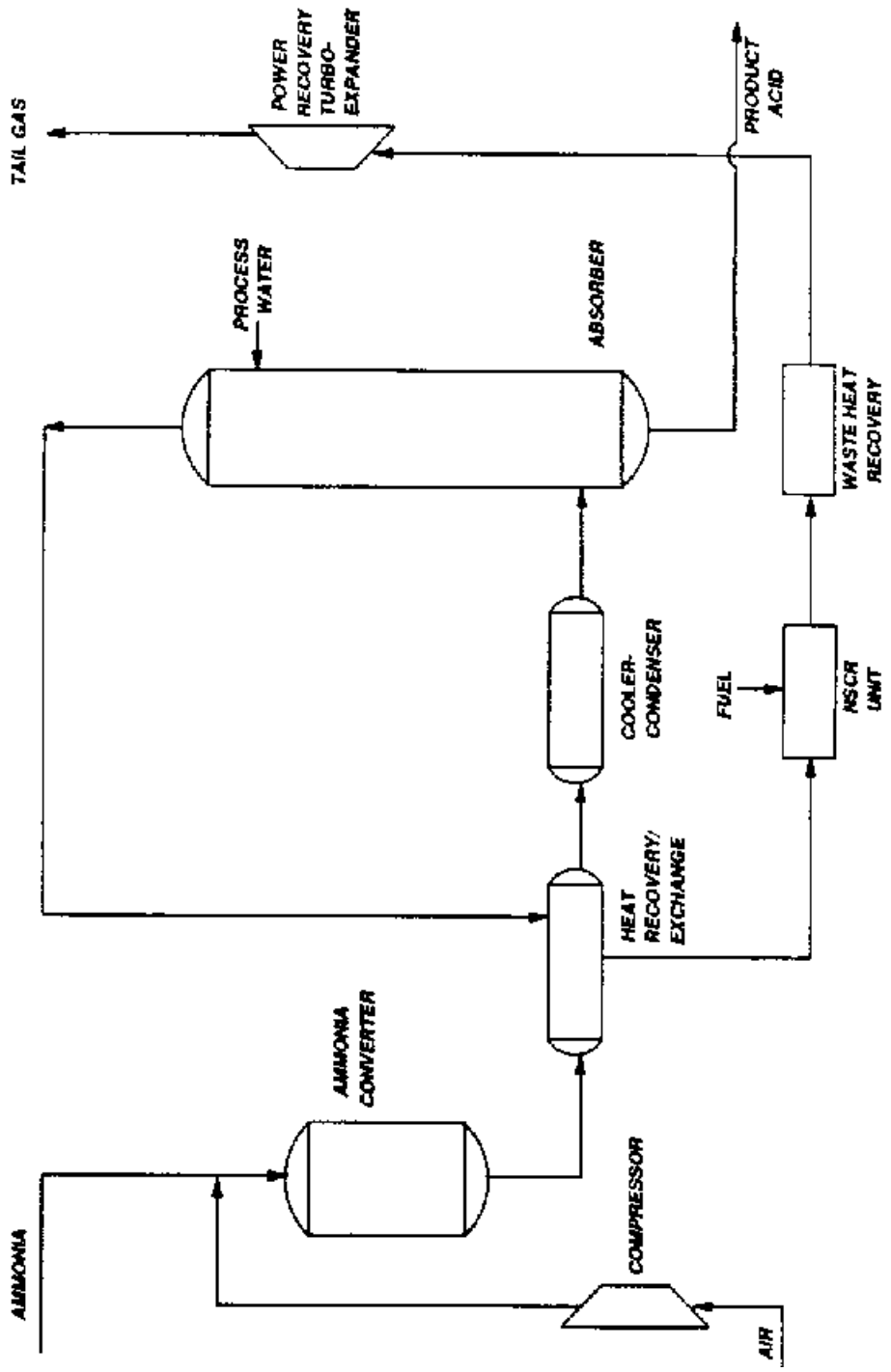

Figure 5-3. Nonselective catalytic reduction system for NO_x control at nitric acid plants.

is a flow diagram for a typical nitric acid plant using nonselective catalytic reduction. Absorber tail gas is heated to the required ignition temperature using ammonia converter effluent gas in a heat exchanger, and fuel (usually natural gas) is added. Available reducing fuels and associated ignition temperatures are as follows:[5,6]

Fuel	Temperature, °C (°F)
Natural gas (methane)	450-480 (842-896)
Propane/butane/naphtha	340 (644)
Ammonia plant purge gas/hydrogen	250 (482)
Carbon monoxide	150-200 (302-392)

The gas/fuel mixture then passes through the catalytic reduction unit where the fuel reacts in the presence of a catalyst with NO_x and oxygen to form elemental nitrogen, water, and carbon dioxide when hydrocarbon fuels are used.

The following reactions occur when natural gas is used as the reducing fuel:[5]

$CH_4 + 2O_2 \rightarrow CO_2 + H_2O + \text{heat}$ (oxygen consumption) Eq. 1

$CH_4 + 4NO_2 \rightarrow 4NO + CO_2 + 2H_2O + \text{heat}$ (decolorizing) Eq. 2

$CH_4 + 4NO \rightarrow 2N_2 + CO_2 + 2H_2O + \text{heat}$ (NO_x reduction) Eq. 3

The second reaction is known as the decolorizing step. Though total NO_x emissions are not decreased, the tail gas is decolorized by converting reddish-brown NO_2 to colorless NO. Not until the final reaction does NO_x reduction actually occur.

Heat from the catalytic reduction reactions is recovered as power in a turboexpander. Depending on the type of NSCR unit, single-stage or two-stage, heat exchangers or quenchers may be required to reduce the outlet gas temperature of the NSCR unit because of thermal limitations of the turboexpander. Temperature rise associated with the use of NSCR is discussed in greater detail in the following paragraphs.

Catalyst metals predominantly used in NSCR are platinum or mixtures of platinum and rhodium. Palladium exhibits better reactivity and is cheaper than platinum. However, palladium tends to crack hydrocarbon fuels to elemental carbon under upset conditions that produce excessively fuel-rich mixtures (greater

than 140 percent of stoichiometry). Consequently, excess oxygen reacts with deposited carbon and produces a surface temperature sufficiently high to melt the ceramic support. Platinum catalysts have been known to operate over extended periods of time at 150 to 200 percent of stoichiometry (fuel: O_2) on natural gas without exhibiting coking.[12] Catalyst supports are typically made of alumina pellets or a ceramic honeycomb substrate, although the honeycomb is preferred due to its higher gas space velocities. Gas space velocity is the measure of the volume of feed gas per unit of time per unit volume of catalyst. The gas space velocity (volumetric flue gas flow rate divided by the catalyst volume) is an indicator of gas residence time in the catalyst unit. The lower the gas space velocity, the higher the residence time, and the higher the potential for increased NO_x reduction. Typical gas space velocities are 100,000 and 30,000 volumes per hour per volume for honeycomb and pellet-type substrates, respectively.[5,12]

The reactions occurring within the reduction unit are highly exothermic. Exit temperature typically rises about 130°C (266°F) for each percent of oxygen consumed when hydrocarbon fuels are used. Alternatively, if hydrogen fuel is used, the corresponding temperature rise is 150°C (302°F) for each percent of oxygen consumed. Due to catalyst thermal limitations, the final reduction reaction must be limited to a temperature of 843°C (1550°F). This corresponds to a maximum tail gas oxygen content of about 2.8 percent to prevent catalyst deactivation.[5] Therefore, the gas must be cooled if oxygen content exceeds 2.8 percent.

Energy recovery imposes greater temperature constraints due to construction material thermal limitations (650°C [1200°F]) of the turboexpander. To compensate for these temperature limitations, two methods of nonselective catalytic reduction have been developed, single-stage and two-stage reduction.

Single-stage units can only be used when the oxygen content of the absorber tail gas is less than 2.8 percent. The effluent gas from these units must be cooled by a heat exchanger or

quenched to meet the temperature limitation of the turboexpander.

Because of the specific temperature rise associated with the oxygen consumption and NO_x removal, two-stage units with an internal quench section are used when the oxygen content is over 3 percent.[2] Two systems of two-stage reduction are used. One system uses two reactor stages with interstage heat removal. The other two-stage reduction system involves preheating 70 percent of the feed to 482°C (900°F), adding fuel, and passing the mixture over the first-stage catalyst. The fuel addition to the first-stage is adjusted to obtain the desired outlet temperature. The remaining 30 percent of the tail gas feed, preheated to only 121°C (250°F), is used to quench the first-stage effluent. The two streams plus the fuel for complete reduction are mixed and passed over the second-stage catalyst. The effluent gas then passes directly to the turboexpander for power recovery. This system eliminates the need for coolers and waste-heat boilers; however, performance of the two-stage system has been less satisfactory than that of the single-stage system.[5,8]

5.1.2.2 <u>Factors Affecting Performance</u>. Factors that can affect the performance of an NSCR unit include oxygen content of the absorber tail gas; fuel type, concentration, and flow distribution; type of catalyst support; and inlet NO_x concentration. The oxygen content of the tail gas entering the catalytic unit must be known and controlled. As mentioned in the previous section, excess oxygen content can have a detrimental effect on the catalyst support and turboexpanders. Even minor oxygen surplus can lead to catalyst deactivation.

The type of fuel selected is based largely upon availability. However, it is important to select a fuel that is compatible with the thermal constraints of the catalytic reduction system. The temperature rise resulting from oxygen consumption is higher for hydrogen than for hydrocarbon fuels.[2] Fuel concentration is also important in achieving maximum NO_x reduction. Natural gas must be added at 10 to 20 percent over stoichiometry to ensure completion of all three reduction reactions. Less surplus fuel is required when hydrogen is used.[5]

Poor control of the fuel/oxygen ratio can result in carbon deposition on the catalyst, thereby reducing its effectiveness. Excessive fuel consumption can be minimized by close control of fuel/tail gas mixing and adequate flow gas distribution into the catalyst bed (to prevent rich or lean gas pockets).[12]

Although similar catalyst metals are typically used, differences in catalyst support can have an effect on the system performance. Honeycomb supports offer relatively low pressure drop and high space velocity. The increased surface area of the honeycomb structure allows greater exposure of the tail gas to the catalytic material, thereby resulting in improved NO_x conversion. However, honeycombs are more easily damaged by overheating. Alternatively, pellet beds have proved to be more durable but offer less gas space velocity. Furthermore, catalyst fines from pellet beds have been reported to cause turboexpander blade erosion.[12,13]

Malfunctions upstream of the catalytic reduction unit will also affect the level of NO_x reduction. Upsets in the absorption column that result in NO_x concentrations in the 9,000 to 10,000 ppm range can inhibit catalytic activity by chemisorption (weak chemical bonds formed between the gas and the catalyst surface). The effects of chemisorption of NO_2 are not permanent, however, and the bed recovers immediately after the upstream abnormality is corrected.[12]

5.1.2.3 <u>Performance of Nonselective Catalytic Reduction</u>. Table 5-2

TABLE 5-2. NITROGEN OXIDES EMISSIONS FROM NITRIC ACID PLANTS USING NONSELECTIVE CATALYTIC REDUCTION

Plant	Design capacity, tons/d	Actual production, % design	No. of stages	Fuel	Catalyst support[a]	Emission factor, lb/ton[b]	Control efficiency, %[c]
A[14]	195	89	1	Natural gas	NA	1.13	97.4
B[15]	350	107	2	Natural gas	H	0.4	99.1
C[15]	55	127	1	Purge gas	P	2.3	94.7
D[15]	55	100	1	Purge gas	H	0.7	98.4
E[16]	900	NA	NA	Natural gas	P	0.4	99.1

NA = not available.
[a]H = honeycomb; P = pellet.
[b]From test reports (EPA method 7).
[c]These figures calculated using average uncontrolled emissions level of 43 lb/ton (from AP-42).

Notes: The following is provided for comparative purposes.

1. From AP-42, NO_x emission levels for nitric acid plants using NSCR
   a. Natural gas--0.2 kg/metric ton; 0.4 lb/ton
   b. Hydrogen--0.4 kg/metric ton; 0.8 lb/ton
   c. Natural gas/hydrogen (25%/75%)--0.5 kg/metric ton; 1.0 lb/ton
2. From AP-42, control efficiency for nitric acid plants using NSCR
   a. Natural gas--99.1%
   b. Hydrogen--97-99.8%
   c. Natural gas/hydrogen (25%/75%)--98-98.5%
3. From NSPS, allowable NO_x emission levels from nitric acid plants
   Emissions:
   1.5 kg/metric ton; 3.0 lb/ton

illustrates the level of control that has been demonstrated by five nitric acid plants using NSCR as the exclusive means of NO_x control. Production capacities range from 50 to 819 metric tons (55 to 900 tons) per day (expressed as 100 percent nitric acid). Both pellet bed and honeycomb catalyst supports are equally used, although single-stage units are the predominant NSCR method. Two common fuel types are used: natural gas (methane) and ammonia plant purge gas (65 percent hydrogen).

The emissions data for plants A and E are taken from test reports and represent the average of multiple test runs (EPA Method 7) at each plant. Emissions data for plants B, C, and D are taken from summaries of test reports and represent the average of three test runs (EPA Method 7). Emission factors range from 0.2 to 1.0 kg of NO_x per metric ton (0.4 to 2.3 lb/ton) of nitric acid (expressed as 100 percent acid). On limited data, no trends are apparent relating the catalytic unit (i.e., the number of stages, fuel type, and catalyst support) to emission factors. However, it should be noted that the plant operating at 127 percent of its design production capacity has the highest NO_x emission factor. Regarding fuel type, AP-42 cites NO_x emission factors of 1.5 pounds per ton for purge gas and 0.6 pounds per ton for natural gas. A possible correlation can be made between control efficiency and the rate of acid production. As discussed in Chapter 4, production rates in excess of design can adversely affect absorber efficiency. Consequently, the NO_x concentration of the gas at the inlet of the NSCR unit may be increased to the point of inhibiting catalyst activity (discussed in Section 5.1.2.2), resulting in decreased control efficiency.

The data in Table 5-2 indicate NO_x control efficiencies ranging from 94.7 to 99.1 percent. This demonstrated level of control is consistent with the control efficiency data presented in AP-42.

5.1.3 Selective Catalytic Reduction

Selective catalytic reduction uses a catalyst and ammonia in the presence of oxygen to reduce NO_x to elemental nitrogen. The

process is called selective because the ammonia preferentially reacts with NO_x in the absorber tail gas. The following sections discuss SCR used as a NO_x control technique for nitric acid plants. Section 5.1.3.1 describes an SCR system including its components and operation. Factors affecting the performance of SCR units are discussed in Section 5.1.3.2. Section 5.1.3.3 presents emission test data and discusses NO_x control performance.

5.1.3.1 <u>Description of SCR Systems</u>. Figure 5-4

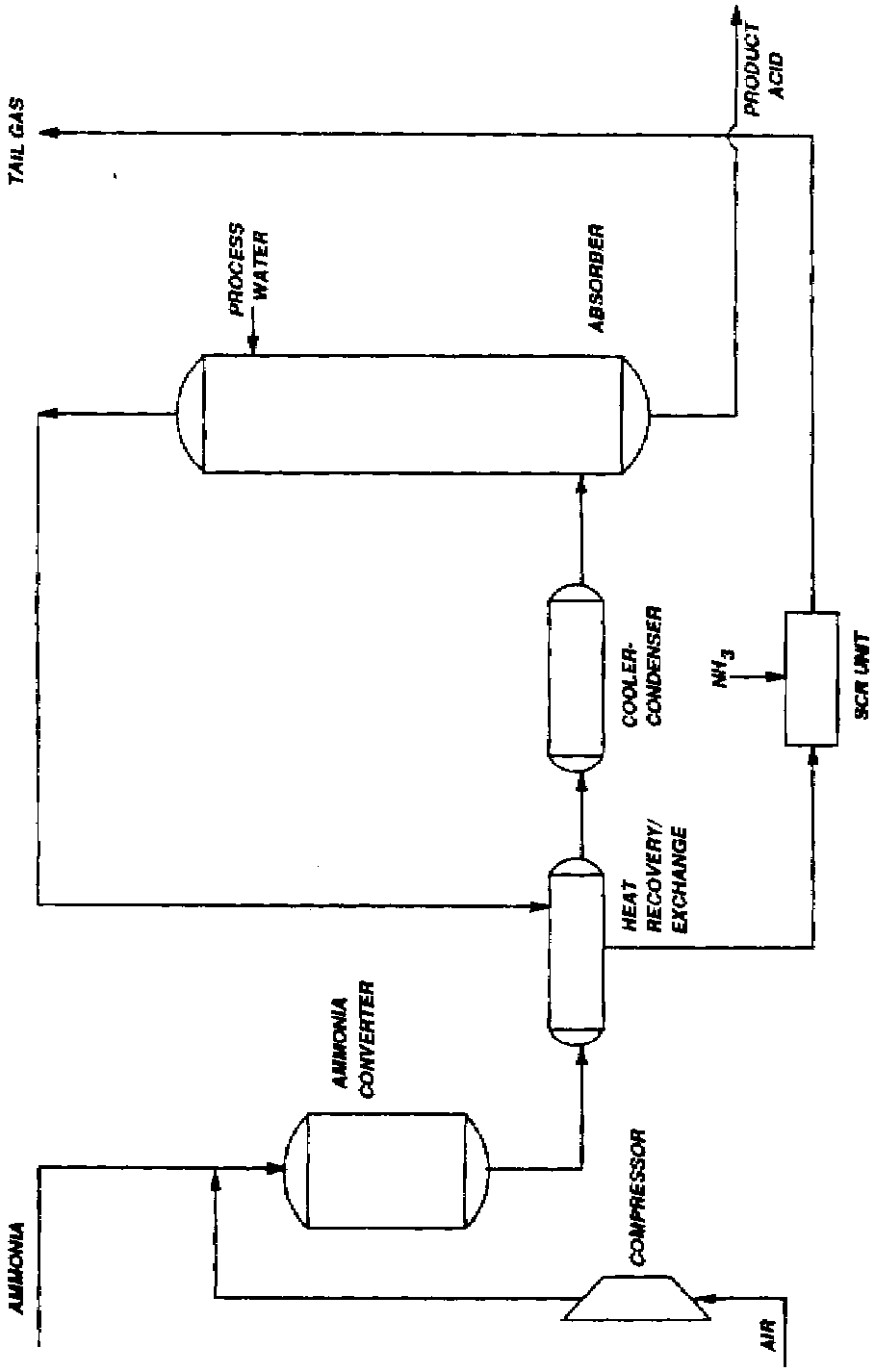

Figure 5-4. Selective catalytic reduction system for NO_x control at nitric acid plants.

is a flow diagram for a typical nitric acid plant using SCR. Following the normal ammonia oxidation process, absorber tail gas is passed through a heat exchanger to ensure that the temperature of the gas is within the operating temperature range (discussed below) of the SCR unit. The gas enters the SCR unit, where it is mixed with ammonia (NH_3) and passed over a catalyst, reducing the NO_x to elemental nitrogen (N_2).

The reactions occurring in an SCR unit proceed as follows:[1,13]

$$8NH_3 + 6NO_2 \rightarrow 7N_2 + 12H_2O + \text{heat} \qquad \text{Eq. 4}$$

$$4NH_3 + 6NO \rightarrow 5N_2 + 6H_2O + \text{heat} \qquad \text{Eq. 5}$$

$$4NH_3 + 3O_2 \rightarrow 2N_2 + 6H_2O + \text{heat} \qquad \text{Eq. 6}$$

Reactions 4 and 5 proceed at much faster rates than Reaction 6. Therefore, NO_x is reduced without appreciable oxygen removal. Proper operation of the process requires close control of the tail gas temperature. Reduction of NO_x to N_2 must be carried out within a narrow temperature range, typically 210° to 410°C (410° to 770°F).[17] The optimum operating temperature range varies with the type of catalyst used. The SCR catalysts are typically honeycombs or parallel plates, allowing the flue gas to flow through with minimum resistance and pressure drop while maximizing surface area. Several catalyst materials are available. In general, precious metal catalysts (e.g., platinum, palladium) yield higher conversions of NO_x to N_2 with low excess ammonia usage at lower temperatures than the base metal oxides (e.g., titanium, vanadium) or zeolites.[12,19] However, titania/vanadia catalysts are most commonly used in nitric acid plants.[20]

Reducing NO_x using SCR results in a reduction in acid yield and increased ammonia use.[12] Acid yield is slightly reduced because NO_x is destroyed rather than recovered as with extended absorption. Although ammonia is an expensive reagent, less fuel is required than for NSCR because complete O_2 consumption is not required. Furthermore, ammonia is readily available since it is consumed as feedstock in the nitric acid process.[8]

Several advantages of SCR make it an attractive alternate control technique. The SCR process can operate at any pressure. The lack of pressure sensitivity makes SCR a viable retrofit control device for existing low-pressure nitric acid plants.[5] Selective catalytic reduction is also well suited for new plant applications. Cost savings are a primary benefit of SCR. Because the temperature rise through the reactor bed is small (2° to 12°C [36° to 54°F]), energy recovery equipment is not required. The need for waste-heat boilers and high-temperature turboexpanders as used for NSCR is eliminated.[5]

5.1.3.2 <u>Factors Affecting Performance</u>. Three critical factors affect the NO_x removal efficiency of SCR units: (1) NH_3/NO_x mole ratio, (2) gas stream temperature, and (3) gas residence time.[20] The reaction equations in the previous section show that the stoichiometric ratio of NH_3 to NO_x is 1:1. Therefore, stoichiometric quantities of ammonia must be added to ensure maximum NO_x reduction. Ammonia injected over stoichiometric conditions permits unreacted ammonia to be emitted, or to "slip." Figure 5-5

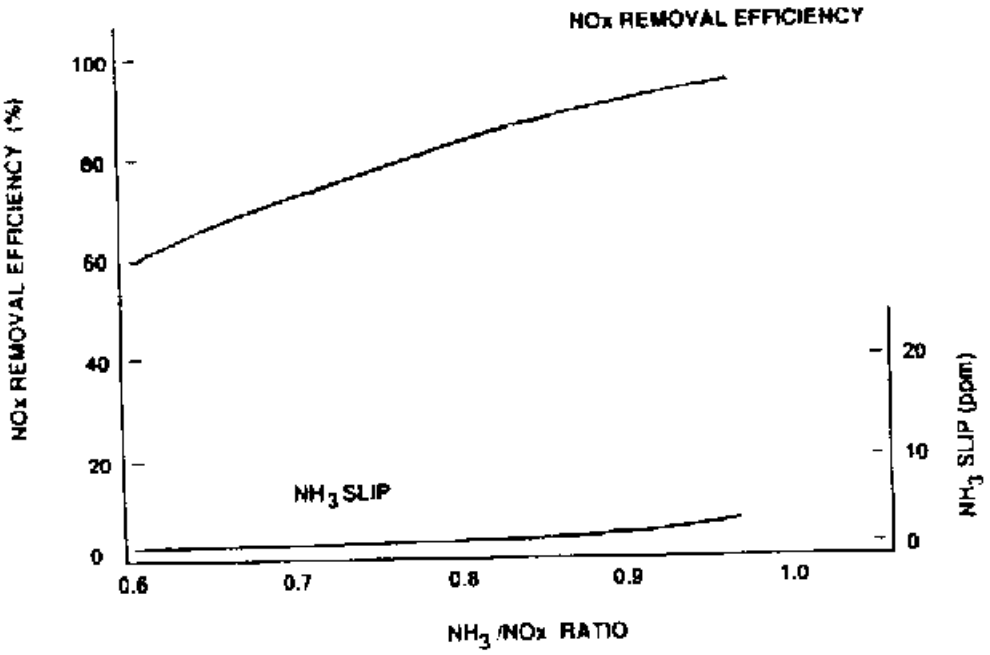

Figure 5-5. SCR catalyst performing as a function of NH_3/NO_x mole ratio.[18]

illustrates NO_x removal efficiency and NH_3 slip as a function of NH_3/NO_x mole ratio. Ammonia slip can be monitored and is easily controlled to levels below 20 ppm (where odor may become a problem).[19]

Catalyst activity varies according to the catalyst composition and temperature. The active temperature range of catalysts used in nitric acid plants are typically 210° to 330°C (410° to 626°F).[17] The gas temperature in the SCR reactor chamber must be within the active temperature range of the catalyst to obtain efficient operation. At lower temperatures, ammonium nitrate salts can be formed, causing possible damage to the downstream turboexpander and piping system. Above 270°C (518°F), NO can be produced by the reaction between NH_3 and O_2 as follows:[13]

$$4NH_3 + 5O_2 \rightarrow 4NO + 6H_2O + \text{heat} \qquad \text{Eq. 7}$$

Older plants may require preheating of the tail gas prior to the SCR unit in order to accommodate the catalyst temperature limitations.[20]

Gas residence time is primarily a function of the flue gas flow and the catalyst volume or surface area. Residence time is expressed as space velocity in $m^3/hr/m^3$ or area velocity in $m^3/hr/m^2$. Figure 5-6

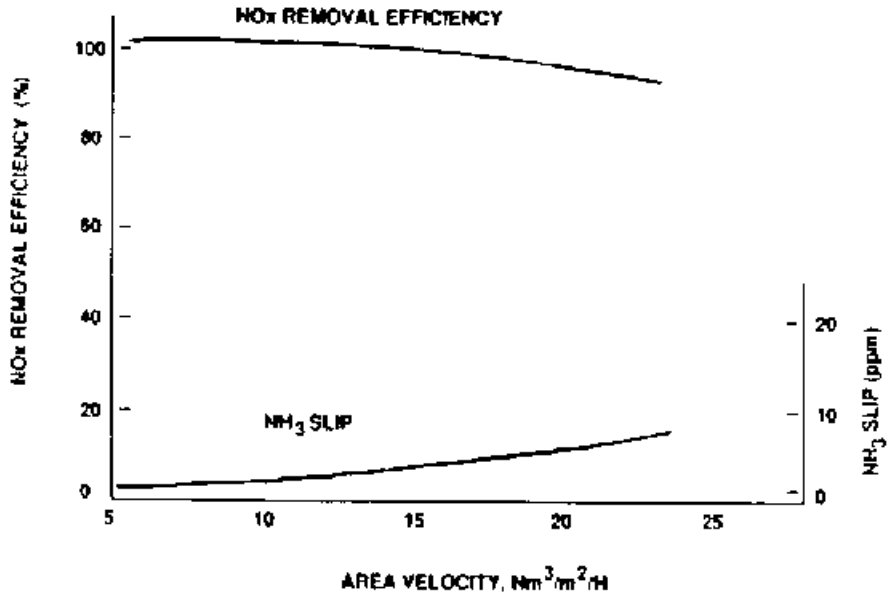

Figure 5-6. SCR catalyst performance as a function of area velocity.[18]

illustrates NO_x removal efficiency and NH_3 slip as a function of area velocity. As the area velocity increases, the residence time of the gas within the catalytic unit decreases. Consequently, NO_x removal efficiency decreases and unreacted ammonia begins to slip.

5.1.3.3 <u>Performance of Selective Catalytic Reduction</u>. Selective catalytic reduction is used in many nitric acid plants in Europe and Japan. However, only three nitric acid plants using SCR have been identified in the United States: (1) First Chemical Corp. in Pascagoula, Mississippi, (2) E.I. DuPont de Nemours in Orange, Texas, and (3) E.I. DuPont de Nemours in Victoria, Texas.

TABLE 5-3. NITROGEN OXIDES EMISSIONS FROM NITRIC ACID PLANTS USING RHONE-POULENC SCR TECHNOLOGY[17]

Location	Start date	NO_x reduction, ppm		Control efficiency, %[a]	Emission factor, lb/ton[b]
		Inlet	Outlet		
Greece	1985	1,300	200	84.6	2.87
Greece	1985	1,500	200	86.7	2.87
Greece	1985	1,200	200	83.4	2.87
Finland	1986	1,500	200	86.7	2.87
Norway	1987	1,200	200	83.4	2.87

[a]Calculated based on inlet/outlet data.
[b]Calculated based on NSPS ratio of 3.0 lb/ton:209 ppm. Example:

$$X \text{ lb/ton} = \text{outlet, ppm} \left(\frac{3.0 \text{ lb/ton}}{209 \text{ ppm}}\right) = 200 \text{ ppm} \left(\frac{3.0 \text{ lb/ton}}{209 \text{ ppm}}\right) = 2.87 \text{ lb/ton}$$

TABLE 5-14. NITROGEN OXIDES (NO_x) EMISSIONS FROM NITRIC ACID PLANTS USING BASF SCR TECHNOLOGY[18]

Location	Start date	Capacity, tons/d	NO_x reduction, ppm		Control efficiency, %[a]	Emission factor, lb/ton[b]
			Inlet	Outlet		
Germany	1975	270	450-800	<150	67-81	<2.15
Germany	1975	270	450-800	<150	67-81	<2.15
Germany	1976	225	1,300	<400	>69	<5.74
Germany	1977	270	450-800	<150	67-81	<2.15
Germany	1977	270	450-800	<150	67-81	<2.15
Germany	1979	270	500	<200	>60	<2.87
Sweden	1979	225	2,000-2,500	<500	75-80	<7.18
Sweden	1980	225	2,000-2,500	<500	75-80	<7.18
Sweden	1982	300	550	<200	>64	<2.87
Portugal	1982	360	500	<200	>60	<2.87
Sweden	1982	390	2,000-3,000	<500	75-83	<7.18
France	1982	920	850-950	<500	41-47	<7.18
Portugal	1982	360	500	<200	>60	<2.87
Norway	1983	450	500	<200	>60	<2.87
Belgium	1985	650	200	<110	>45	<1.58

[a]Calculated based on inlet/outlet data.

[b]Calculated based on NSPS ratio of 3.0 lb/ton:209 ppm. Example:

$$x \text{ lb/ton} = \text{outlet, ppm} \left(\frac{3 \text{ lb/ton}}{209 \text{ ppm}}\right) = 150 \text{ ppm} \left(\frac{3 \text{ lb/ton}}{209 \text{ ppm}}\right) = 2.15 \text{ lb/ton}$$

European plants using SCR. The data are from European technical papers discussing NO_x reductions using SCR from two process licensors.[17,18] Descriptions of the test data and test methods are not reported. Control efficiencies are calculated using the inlet and outlet test data and range from 44 to 86.7 percent. Emission factors are calculated using a ratio established for the nitric acid NSPS (3.0 lb/ton:209 ppm) and the outlet NO_x concentration. The emission factors range from less than 0.72 to 3.3 kg of NO_x per metric ton (1.58 to 7.18 lb/ton) of nitric acid. The data do not indicate a trend relating SCR control performance to inlet NO_x concentration. It should be noted, however, that high emission factors (greater than 3.0 lb/ton) may indicate less stringent standards rather than low SCR control efficiency.

First Chemical Corporation in Pascagoula, Mississippi, is a new nitric acid manufacturing facility producing 250 tons per day of nitric acid. Selective catalytic reduction is used in conjuction with extended absorption for NO_x control. Compliance testing, using EPA Method 7, was performed in April 1991. A summary of the compliance testing data is as follows:[21]

NO_x emission factor: 0.29 kg/metric ton (0.57 lb/ton);

NO_x concentration: less than 60 ppm; and

Stack plume opacity: zero percent.

No information was obtained regarding the uncontrolled (exit the NO_x absorber) NO_x level. However, because First Chemical is a new facility, it is reasonable to assume an uncontrolled NO_x emission factor of at least 10 kg per metric ton (20 lb/ton).[7] Based on this uncontrolled NO_x emission factor of 10 kg per metric ton (20 lb/ton), the controlled NO_x emission factor (0.29 kg/metric ton [0.57 lb/ton]) represents a control efficiency for SCR of 97.2 percent. Again for comparative purposes, the NO_x emission data from First Chemical (0.57 lb/ton; <60 ppm) demonstrate that SCR is capable of reducing NO_x emissions to well below NSPS levels (3.0 lb/ton; 209 ppm).

5.1.4 Control Technique Performance Summary

Table 5-5 summarizes the NO_x control data presented in Tables 5-1 through 5-4. For each control technique, the

TABLE 5-5. SUMMARY OF NO_x CONTROL TECHNIQUE PERFORMANCE NITRIC ACID PLANTS

Control technique	Emission factor, kg/metric (lb/ton)		Control efficiency, %	
	Range	Average	Range	Average
Extended adsorption	0.59-1.28 (1.3-2.81)	1.05 (2.3)	93.5-97.0	94.6
NSCR	0.2-1.05 (0.4-2.30)	0.5 (1.0)	94.7-99.1	97.7
SCR (European)[a]	0.72-3.26 (1.58-7.18)	<1.67 (<3.67)	44-86.7	70.8
SCR (U.S.)[b]	0.29 (0.57)		97.2	

[a]SCR data are from European plants where less stringent (compared with U.S. standards) standards are imposed. The SCR is used to bring NO_x emissions down to required levels only.

[b]Based on compliance test data from a single plant using SCR with extended absorption (First Chemical Corporation).chemical reaction.

following data are presented: range of achievable control, average achievable control, range of control efficiency, and average control efficiency.

5.1.5 Other Control Techniques

Several other control techniques for nitric plants have been developed and demonstrated. However, poor NO_x control performance or other disadvantages have excluded these controls from common use. These NO_x control techniques are (1) wet chemical scrubbing, (2) chilled absorption, and (3) molecular sieve adsorption. Each of these techniques is described briefly below.

5.1.5.1 Wet Chemical Scrubbing. These processes use ammonia, urea, or caustic chemicals to "scrub" NO_x from the absorber tail gas, converting the NO_x to nitrates or nitrites by 5.1.5.1.1 Ammonia scrubbing. Goodpasture, Inc., developed an ammonia scrubbing process in 1973 that is suitable to retrofit existing plants with inlet NO_x concentrations of up to 10,000 ppm. Feed streams to this process are ammonia and water. Ammonium nitrate is produced as a byproduct of this process. Successful operation of this process requires that ammonium nitrite formation be kept to a minimum and any ammonium nitrite that forms must be oxidized to ammonium nitrate. A flow diagram for this process is shown in Figure 5-7

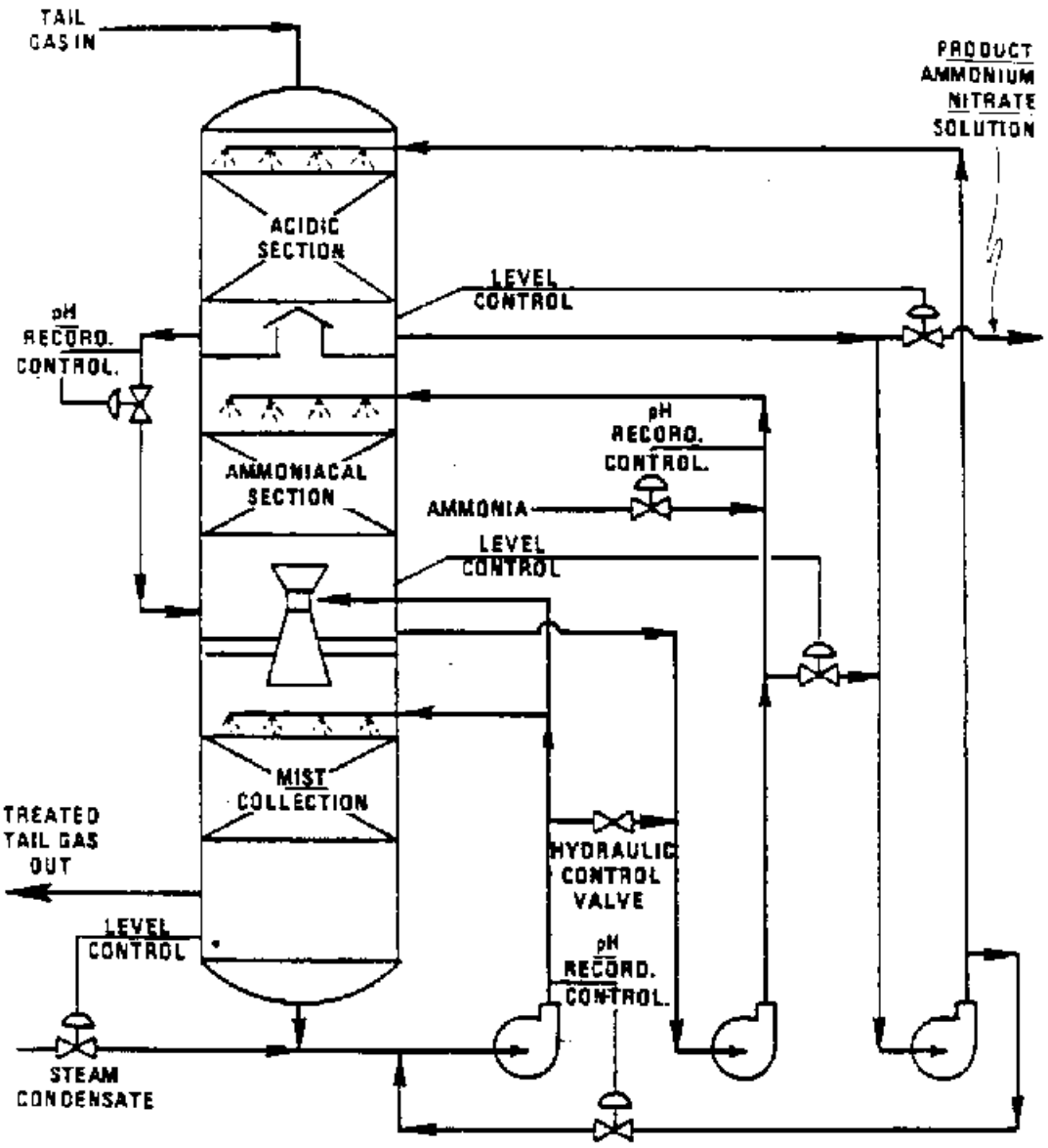

Figure 5-7. Process flow diagram for the Goodpasture process.[22]

. The entire process is conducted in a single packed bed absorption tower with three sections operated in concurrent flow. In the Goodpasture process, there are three distinct sections of the absorption tower:

1. A gas absorption and reaction section operating on the acidic side;
2. A second gas absorption and reaction section operating on the ammonic side; and
3. A final mist collection and ammonia recovery section.

Tail gas enters the first or acidic section of the tower, where NO_x in the gas stream is converted to nitric acid. Ammonia is added to the process in the second section in sufficient amounts to maintain the pH at a level of 8.0 to 8.3. In this section of the tower, ammonia reacts with NO_x in the gas stream to form ammonium nitrate and ammonium nitrite; the proportion of each depends on the oxidation state of the NO_x. Product solution from the second section is fed to the first, where ammonium nitrite is oxidized to ammonium nitrate by the acidic conditions, and ammonium nitrate is formed directly from the reaction of free ammonia with nitric acid. The resulting solution is split into two streams. One stream is withdrawn from the process as product solution, while the other is fed to the second or ammoniacal section of the tower. Feed streams to the third and final section of the tower consist of process water or steam condensate in sufficient quantities to maintain the product ammonium nitrate solution in the 30 to 50 percent concentration range, and a small amount of solution from the acidic section to control the pH to approximately 7.0. In this section of the process, entrained droplets are removed, and any free ammonia is stripped from the solution. Product solution withdrawn from the first section of the process contains 35 to 40 percent ammonium nitrate and 0.05 percent ammonium nitrite. The ammonium nitrite can be oxidized by heating the solution to 115°C (240°F) or by simply holding it in a tank for 24 hours without heating.

Ammonia scrubbing systems have operated reliably. An advantage of this process is that the pressure losses are only

6.8 to 13.0 kPa (1-2 psi), which allows the process to be easily retrofitted for control of existing low-pressure nitric acid plants. Special precautions must be taken, however, to prevent deposition of ammonium nitrate on the power-recovery turboexpander blades. One potential disadvantage of the process is that the requirement for 85 percent ammonium nitrate solutions by modern fertilizer plants can necessitate additional evaporators to concentrate the 35 to 55 percent ammonium nitrate solution recovered as a byproduct from the Goodpasture process.[5] The Goodpasture process is designed to reduce inlet NO_x concentrations as high as 10,000 ppm (65 kg per metric ton [144 lb/ton]) to within NSPS limits (1.5 kg per metric ton [3.0 lb/ton]).[5] However, nitric acid plants that use this process have not been identified. Therefore, no test data are available.

5.1.5.1.2 Urea scrubbing. The MASAR process serves as a representative example of urea scrubbing. A flow diagram for the MASAR process is shown in Figure 5-8

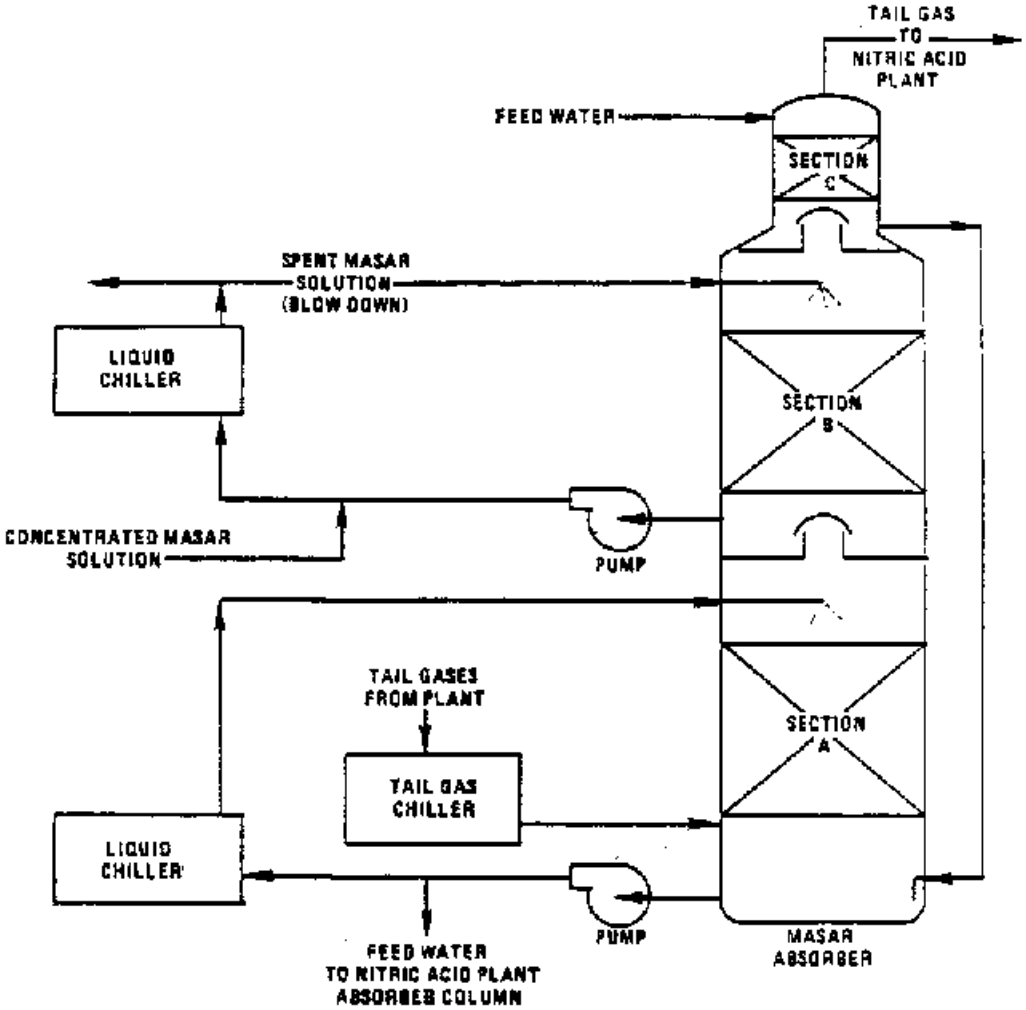

Figure 5-8. Flow diagram of the MASAR process.[23]

. The process control device consists of a three-stage absorption column with gas and liquid chillers on the feed gas and recirculated solvents. Liquid ammonia or some other form of refrigeration is used as the cooling medium. The chemical reaction mechanisms proposed for urea scrubbing are as follows:

$$HN0_2 + CO(NH_2)_2 \leftrightharpoons N_2 + HNCO + H_2O \qquad \text{Eq. 8}$$

$$HNCO + HNO_2 \leftrightharpoons N_2 + CO_2 + H_2O \qquad \text{Eq. 9}$$

$$HNCO + H_2O + H + \leftrightharpoons NH_4 + CO_2 \qquad \text{Eq. 10}$$

Under actual process operating conditions, the last reaction listed above predominates so that the overall reaction is:

$$HNO_2 + CO\ (NH_2)_2 + HNO_3 \rightarrow N_2 + CO_2 + NH_4NO_3 + H_2O \qquad \text{Eq. 11}$$

In the MASAR process, absorber tail gas is first cooled in a gas chiller, where condensation occurs and forms nitric acid. Normal plant absorber feedwater is chilled in the top section of the MASAR absorber and is then fed to the bottom section, where it flows countercurrent to the incoming chilled tail gas in the packed bed. After additional NO_x is scrubbed from the tail gas, the scrubbing water is recirculated through a chiller to remove reaction heat; this weak acid stream is used as feed to the nitric acid plant absorber. In the middle section of the MASAR absorber, the tail gas is scrubbed with the urea-containing solution, forming nitric acid and nitrous acid that reacts to form $CO(NH_2)$, N_2, and H_2O. Recirculation of the scrubbing solution causes the concentration of nitric acid and ammonium nitrate to rise. Therefore, a bleed stream is required to keep the system in balance. Makeup urea/water solution is fed to the scrubbing system at a rate sufficient to maintain a specified minimum urea residual content. To maintain temperature control in the middle section, the recirculated scrubbing solution is pumped through a chiller to remove the heat of reaction. Prior to leaving the MASAR unit, the tail gas is again scrubbed with plant absorber feed water in the top section.[5]

This process has been reported to reduce NO_x emissions from 4,000 to 100 ppm (26 to 0.7 kg per metric ton [57 to 1.4 lb/ton]) and can theoretically be designed for zero liquid discharge.[8] In practice, however, liquid blowdown of 16 kg/hr (35 lb/hr) of urea

nitrate in 180 kg/h (396 lb/hr) of water is estimated for a plant with a capacity of 320 Mg of nitric acid/d (350 tons/d).

5.1.5.1.3 Caustic scrubbing. Caustic scrubbing involves treatment of the absorber tail gas with solutions of sodium hydroxide, sodium carbonate, or other strong bases to absorb NO_x in the form of nitrate or nitrite salts in a scrubbing tower. Typical reactions for this process are:

$$2NaOH + 3NO_2 \leftrightharpoons 2NaNO_3 + NO + H_2O \qquad \text{Eq. 12}$$

$$2NaOH + NO + NO_2 \leftrightharpoons 2NaNO_2 + H_2O \qquad \text{Eq. 13}$$

One disadvantage of this process is that disposal of the spent scrubbing solution can require waste-water treatment. Also, the cost of the caustic can become prohibitive.[1,5,8]

5.1.5.2 Chilled Absorption. Chilled absorption provides additional cooling to the absorption tower. This process is frequently used in addition to other control techniques such as extended absorption. The principal advantage of chilled absorption is improved absorber efficiency due to lower absorption temperature. However, chilled absorption by itself typically cannot reduce NO_x emissions to the level that any of the three primary control techniques can achieve. Two types of chilled absorption are the CDL/VITOK and the Tennessee Valley Authority (TVA) processes.

In the CDL/VITOK process, tail gas enters the absorber, where the gases are contacted with a nitric acid solution to both chemically oxidize and physically absorb NO_x. A flow diagram of this process is shown in Figure 5-9

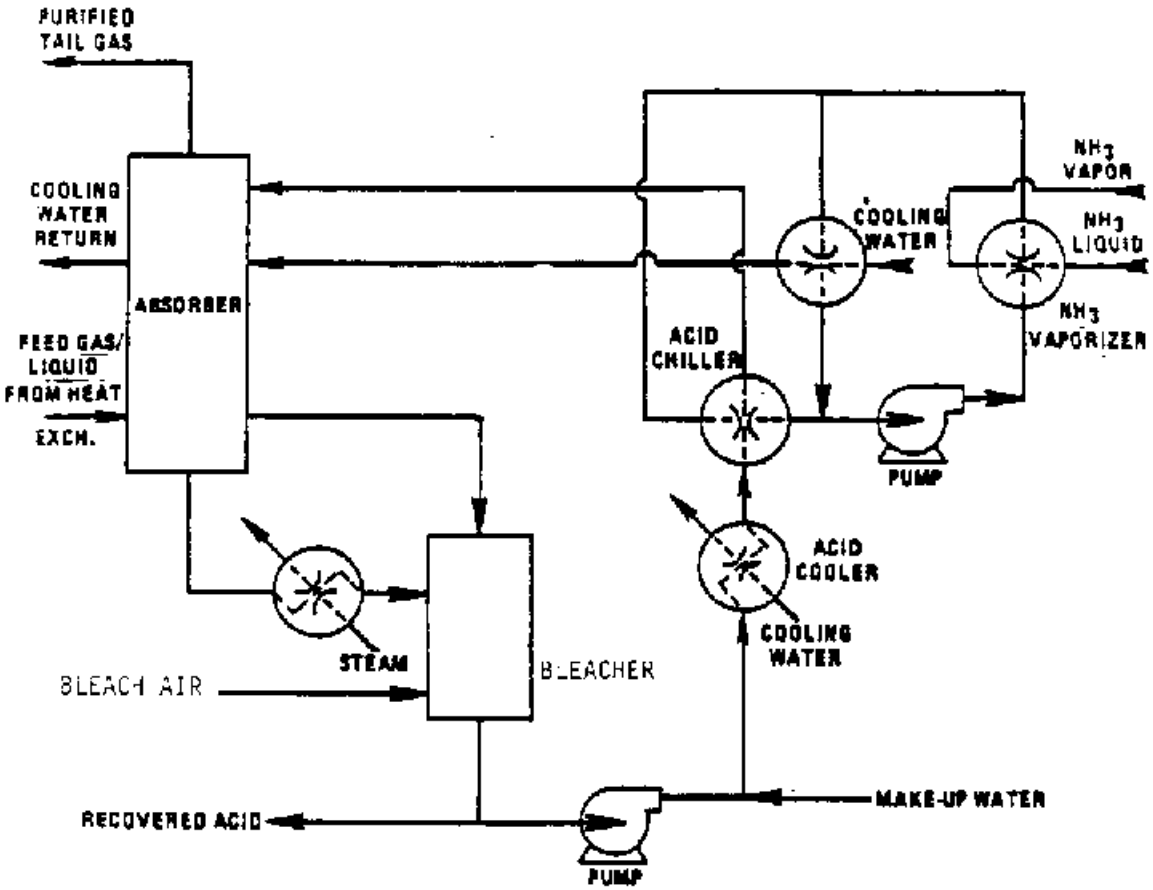

Figure 5-9. Schematic diagram of the CDL/VITOK NO_x removal process.[24]

. The reaction of NO to NO_2 is catalyzed in the main absorber. The upper portion of the absorber is water-cooled to improve absorption. The nitric acid solution from the absorber is sent to a bleacher where air removes entrained gases and further oxidation occurs. The bleached nitric acid solution is then either sent to storage or recirculated to the absorber after makeup water is added. The process uses a closed-loop system to chill the recirculated acid solution and tower cooling water by ammonia evaporation.

One variation in this system proposed by CDL/VITOK includes adding an auxiliary bleacher operating in parallel with the primary unit. Another variation uses a secondary absorber with its own bleacher.[8]

The TVA designed and installed refrigeration for NO_x abatement purposes on a nitric acid plant. This process uses ammonia from the ammonia oxidation process in a closed loop to cool the top trays of the absorber. Bleacher effluent gases are also recycled to the absorption tower. Effectiveness of the TVA process relies on high absorber inlet pressure. This process reduces product acid concentration.[8,25]

5.1.5.3 <u>Molecular Sieve Adsorption</u>. The molecular sieve process has been successful in controlling NO_x emissions from existing plants. However, no new nitric acid plants have been built that use this form of NO_x control.[8] The principal objections to the process are high capital and energy costs, the problems of coupling a cyclic system to a continuous acid plant operation, and bed fouling.

The pressure drop through the sieve bed is rather high and averages 34 kPa (5 psi). The average concentration of NO_x in the treated tail gas discharged to the atmosphere is 50 ppm.[5]
Figure 5-10

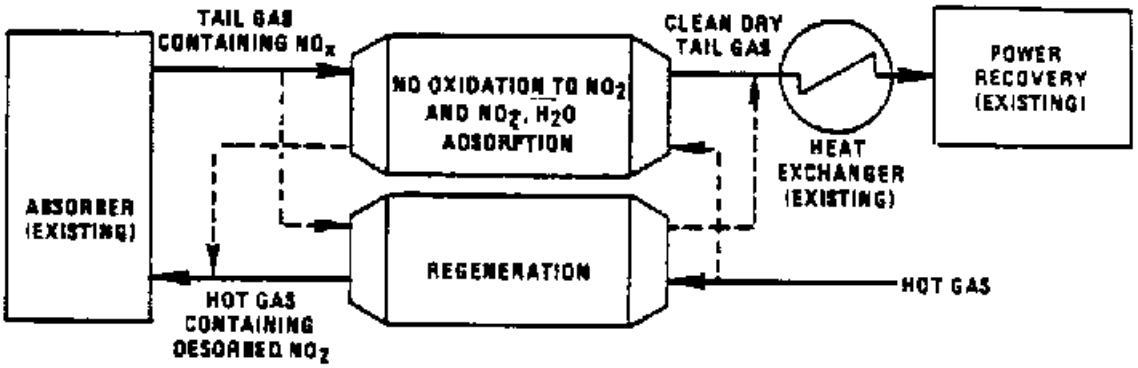

Figure 5-10. Molecular sieve system.[26]

shows a flow diagram of a typical molecular sieve system. The fundamental principle behind molecular sieve control is selective adsorption of NO_x followed by recycle of the NO_x back to the nitric acid plant adsorption tower. The first step of the process is to chill the absorber tail gas to between 7° and 10°C (45° and 50°F); the exact temperature required is governed by the NO_x concentration in the tail gas stream. Next, the chilled gas is passed through a mist eliminator to remove entrained water droplets and acid mist. Weak acid is collected in the mist eliminator to remove entrained water and acid mist. This collected weak acid is either recycled to the absorption tower or stored. Partially dried tail gas then passes to the sieve bed, where several operations proceed simultaneously:

1. Dessicant contained in the bed removes the remaining moisture from the gas stream;
2. NO in the tail gas is converted catalytically to NO_2; and
3. NO_2 is selectively adsorbed.

Regeneration is accomplished by thermal-swinging (cycling) the adsorbent/catalyst bed after it is nearly saturated with NO_2. Regeneration gas is obtained by heating a portion of the treated tail gas in an oil- or gas-fired heater. This gas is then used to desorb NO_2 from the bed for recycle back to the nitric acid plant absorption tower. Both adsorption and regeneration of the bed require approximately 4 hours.[5]

5.2 ADIPIC ACID MANUFACTURING

Adipic acid is produced at four plants in the United States. This section presents a discussion of two NO_x control techniques used at three of the plants: extended absorption and thermal reduction. A third technique, fume removal by suction, is uniquely applied by the fourth plant at which adipic acid is a byproduct.

Sections 5.2.1 and 5.2.2 present discussions of extended absorption and thermal reduction, respectively. These sections describe the control techniques, discuss factors affecting their performance, and provide emissions data that demonstrate the

level of achievable NO_x control. Section 5.2.3 describes the NO_x fume removal and recycle system used at the Allied-Signal plant in Hopewell, Virginia.

5.2.1 Extended Absorption

Extended absorption is used at one plant to reduce NO_x emissions from adipic acid manufacturing by increasing the absorption efficiency of the NO_x absorber. Increased NO_x absorption efficiency is achieved by increasing the volume of the absorber, which extends the residence time of the NO_x-laden gas with absorbing water, and by providing sufficient cooling to remove the heat released by the absorption process.

Extended absorption is suitable for new and retrofit adipic acid plant applications because a NO_x absorption tower is an integral part of all adipic acid manufacturing processes. Extended absorption was installed as a retrofit control on the adipic acid plant that uses this control technique.[27]

The following sections discuss extended absorption used as a control technique for adipic acid plants. Section 5.2.1.1 describes the extended absorption system. Section 5.2.1.2 discusses factors affecting the performance of extended absorption. Levels of achievable NO_x emission reductions and the performance of extended absorption are presented in Section 5.2.1.3.

5.2.1.1 Description of Extended Absorption.

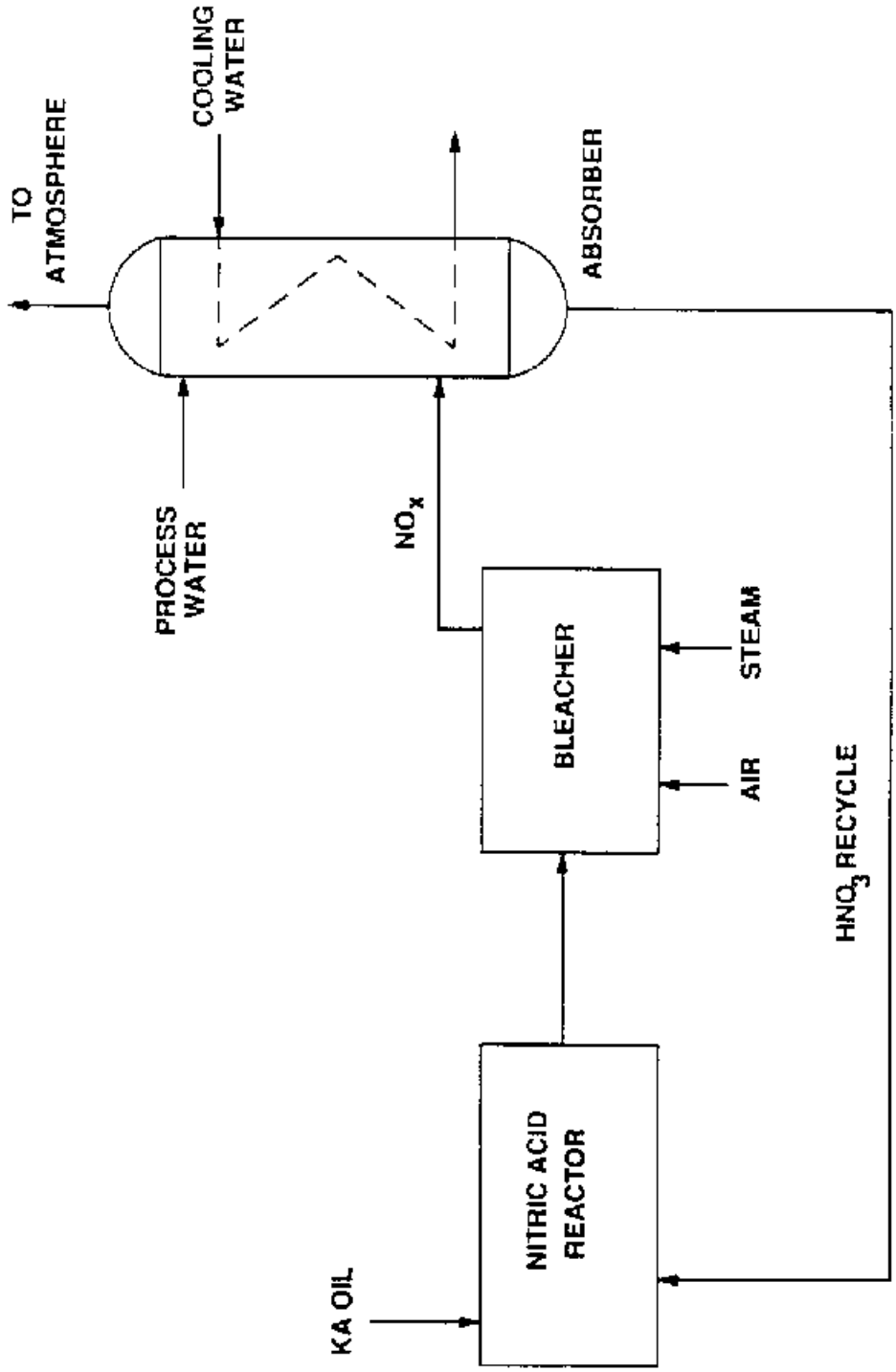

Figure 5-11. Extended adsorption for NO_x control at an adipic acid plant.

is a flow diagram for the nitric acid reaction portion of a typical adipic acid plant using extended absorption for NO_x control. Following the nitric acid oxidation of the KA (ketone-alcohol) oil, NO_x is stripped from the product solution using air and steam in a bleacher. The NO_x is then recovered as a weak nitric acid solution in an absorption tower containing bubble-cap trays.

Nitrogen oxides enter the lower portion of the absorption tower and flow countercurrent to descending process water, which enters near the top of the absorption tower. Two processes occur within the absorption tower: (1) NO is oxidized to NO_2, and (2) NO_2 is absorbed in water, forming nitric acid. Heat created by these processes reactions is removed by cooling water circulating in internal coils within the trays. The strength of the nitric acid recovered from the bottom of the absorption tower is about 20 percent.[28] This weak nitric acid is recycled to the nitric acid reactor. The tail gas exits the top of the absorber and is discharged to the atmosphere.

5.2.1.2 <u>Factors Affecting Performance</u>. Several factors that affect the performance of an extended absorber include high pressure, low temperature, long residence time, and low throughput. These factors are discussed in detail in Chapter 4 (Section 4.1.2). One adipic acid manufacturer that uses extended absorption for NO_x control cites two main design criteria for effective absorber performance: long residence time and low temperature.[28]

The primary purpose for increasing the size of an absorber is to increase the residence time. Increasing the residence time of NO_x in the absorber does the following: (1) allows sufficient time for NO_2 to be absorbed (approximately 1 second), and (2) allows more time for NO (relatively insoluble) to be oxidized to readily soluble NO_2 (minutes). The residence time can also be increased by using O_2 rather than air as a bleaching agent.

Low temperature is another key factor in increasing NO_x absorption in the absorber. The lower the temperature, the faster and more efficient the NO_x absorption.[28] To maintain

efficient operation, heat of reaction is removed by circulating cooling water through coils in the absorber trays. At one plant, enough cooling water is circulated through the absorberber such the gas temperature rises 1°C (1.8°F).[28] By maintaining a low temperature, the absorption process occurs more readily and the required residence time is also decreased.

5.2.1.3 <u>Performance of Extended Absorption</u>. Extended absorption is used to control NO_x at one adipic acid plant in the United States. This plant produces approximately 190,000 tons of adipic acid per year using the cyclohexane oxidation method.[29] A summary of the results of NO_x emissions tests was provided by the plant.

Nitrogen oxides monitoring was conducted over a 3-day period in 1988 to determine the level of NO_x emissions from the NO_x absorber, located downstream of a nitric acid reactor (Figure 5-11). On-line instruments used to monitor NO_x were calibrated using EPA methods. The NO_x absorber was operating at maximum rates with cooling water temperature around 20°C (68°F). Samples were withdrawn from piping at the exit of the absorber. The testing showed that NO_x varied from 500 to 1,500 ppm off the column.[28] With State permit limits at about 4,500 ppm, the tests show that extended absorption is capable of achieving permitted levels of NO_x control. An emission factor for NO_x from the absorber was not available. However, calculations using the permit level of 700 tons per year and the plant production capacity indicate a NO_x emission factor of at least 3.7 kg of NO_x per metric ton (7.4 lb/ton) of adipic acid produced. By equating the State permit levels (700 tons/yr = 4,500 ppm) and applying that equivalence ratio to the NO_x concentrations determined from the monitoring data (500 to 1,500 ppm), a range of annual NO_x emissions and emission factors can be calculated. Using the method just described, the annual NO_x emissions for this adipic acid plant ranged from 77 to 233 tons per year. By dividing the annual NO_x emissions by the annual adipic acid production for this plant, the NO_x emission factors are found to range from

0.41 to 1.23 kg per metric ton (0.81 to 2.45 lb/ton) of adipic acid produced.

5.2.2 Thermal Reduction

Thermal reduction is used to control NO_x emissions from adipic acid manufacturing by reacting the NO_x in the absorber tail gas with excess fuel in a reducing atmosphere.[30] This technique of NO_x reduction is used at two adipic acid plants. One plant reduces NO_x in a powerhouse boiler, while the other uses a thermal reduction furnace. However, both techniques can be considered similar and are treated as such in this section.[30]

The following sections discuss thermal reduction used as a control technique for adipic acid plants. Section 5.2.2.1 describes the thermal reduction process. Factors affecting the performance of thermal reduction are presented in Section 5.2.2.2. Levels of controlled NO_x emissions and performance of thermal reduction are presented in Section 5.2.2.3.

5.2.2.1 Description of Thermal Reduction. Thermal (or flame) reduction reduces NO_x by reaction with excess fuel in a reducing environment. In a typical thermal reduction unit, the NO_x-laden stream and excess fuel (usually natural gas) mixture passes through a burner where the mixture is heated above its ignition temperature. The hot gases then pass through one or more chambers to provide sufficient residence time to ensure complete combustion. For economic reasons, heat recovery is an integral part of thermal reduction units.[31] A heat recovery steam generator typically is used for heat recovery.

The thermal reduction unit used at one plant consists of two cylindrical towers, 20 feet high and 8 feet in diameter, through which the gas flows at a rate of 15,000 lb/hr.[32] Figure 5-12

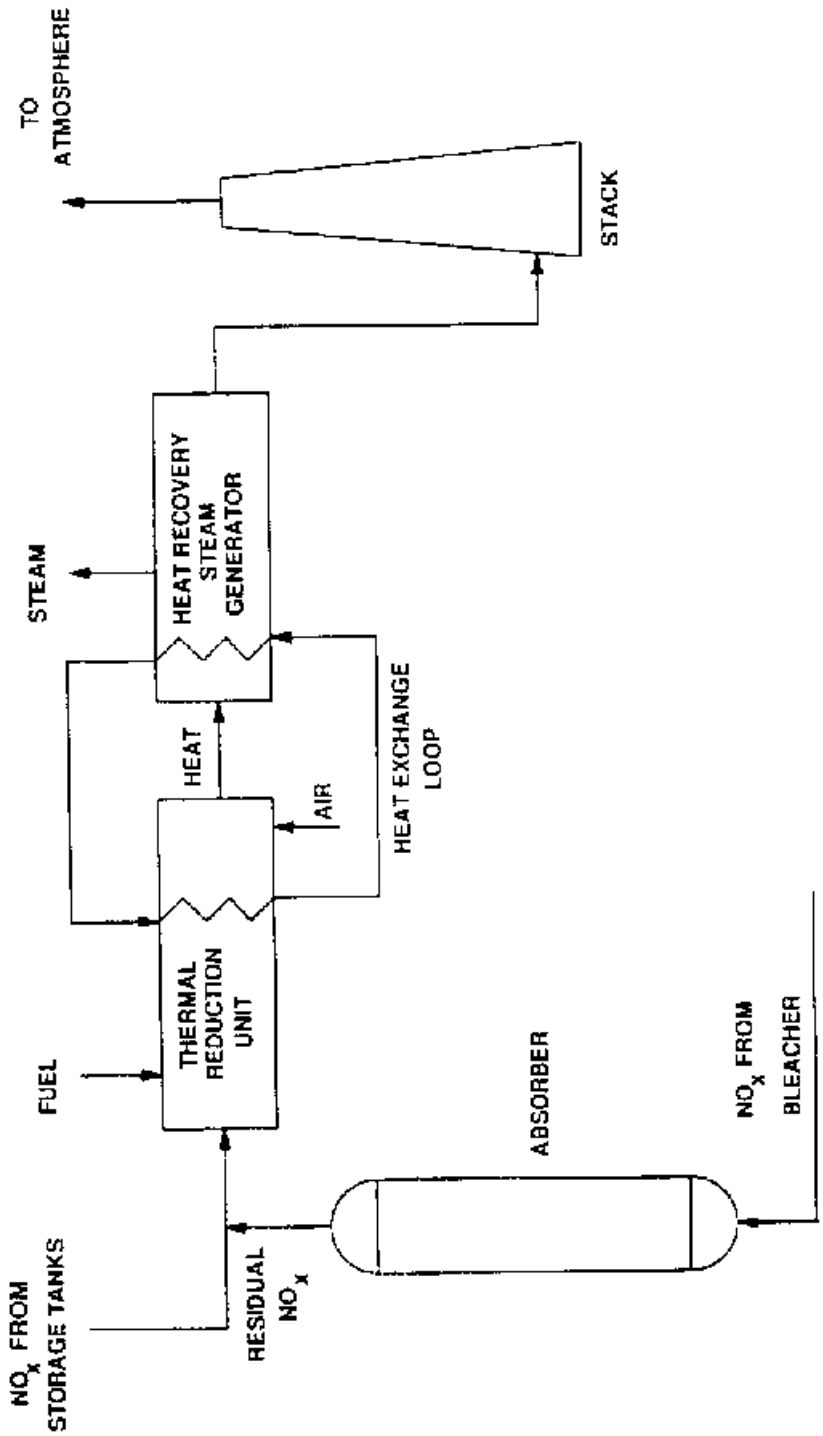

Figure 5-12. Thermal reduction unit for NO^x control at an adipic acid plant.

is a simplified flow diagram of an adipic acid plant using thermal reduction for NO_x control. Thermal reduction reduces NO_x in three steps. First, the absorber tail gas is mixed with excess fuel and burned at high temperature (1090°C [2000°F]) to form CO_2, N_2, and H_2O in two reactions as follows:

$$CH_4 + 4NO_2 \rightarrow 4NO + CO_2 + 2H_2O \qquad \text{Eq. 14}$$

$$CH_4 + 4NO \rightarrow 2N_2 + CO_2 + 2H_2O \qquad \text{Eq. 15}$$

In the second step, the gases are cooled to approximately 760°C (1400°F), usually by heat exchange. In the third step of the process, air is admitted and the excess fuel is burned at the lower (760°C [1400°F]) temperature. Burning the excess fuel at this temperature prevents atmospheric nitrogen fixation, called thermal NO_x.[33] Two adipic acid plants that use thermal reduction to control NO_x produce steam with the heat generated from their NO_x control systems.[32,34] For example, one plant with an annual adipic acid production capacity of 300,000 tons per year produces approximately 50,000 lb/hr of steam from its thermal reduction unit.[40]

In addition to NO and NO_2, adipic acid manufacturing also produces large quantities of N_2O. This N_2O can be removed upstream of the NO_x absorber and recovered for medical use. If not recovered for resale, the N_2O generally decomposes in the thermal reduction unit to nitrogen and oxygen; however, some NO_x is created as a result of the decomposition. There is no data to quantify the percentage of NO_x reformation in the thermal reduction unit, although the net effect of this control technique is that NO_x emissions do not exceed the amount of NO_x fed to the unit.[32]

5.2.2.2 <u>Factors Affecting Performance</u>. Thermal reduction is essentially a two-step combustion process burning fuel, air, and NO_x. The NO_x reduction process occurs after complete combustion of the air. The effectiveness of this NO_x reduction process relies on two factors: temperature and excess fuel.

Temperature is an important criterion of thermal reduction unit design. Temperature greatly affects the rate at which the combustion/NO_x reduction reactions occur. The higher the

temperature, the faster the reactions proceed.[31] Faster reaction time reduces the amount of residence time necessary for complete combustion, thereby reducing the required size of the unit. However, since fuel costs are the major operating expense for thermal reduction units, economics dictates the balance between operating temperature and unit size. Typical operating temperature for a thermal reduction unit is 1090°C (2000°F).

Thermal reduction units typically burn natural gas (methane) in a fuel-rich mode to create a reducing environment. Excess fuel is required (1) to maintain temperature and (2) to reduce NO_x. Enough fuel must be admitted to the burners to promote the initial combustion process. As the temperature in the combustion chamber increases, the combustion reaction becomes increasingly self-sustaining. Then, only enough fuel to ensure complete combustion of the air is needed. However, to reduce NO_x, excess fuel is required to react with the oxygen component of NO_x, forming CO_2 and water vapor while reducing NO_x to elemental nitrogen. The amount of excess fuel required depends on the NO_x concentration inlet of the thermal reduction unit and the operating temperature.

5.2.2.3 <u>Performance of Thermal Reduction</u>. Thermal reduction is used to control NO_x emissions at two adipic acid plants in the United States. Current NO_x emissions data are available for only one plant. However, a study of adipic acid plants performed in 1976 presents NO_x emissions data for both plants.

Table 5-6 presents the available NO_x emissions data for the two adipic acid plants using thermal reduction. Both plants produce adipic acid using the cyclohexane oxidation process. The controlled NO_x emission rate for Plant B (371 lb/hr) is the average of 21 tests performed in 1989. The measured NO_x emission

TABLE 5-6. NITROGEN OXIDES EMISSIONS FROM ADIPIC ACID PLANTS USING THERMAL REDUCTION

Plant	Annual production capacity, tons/yr	Fuel	NO_x emissions rate, lb/hr	Annual NO_x emissions, ton/yr	NO_x emission factor, lb/ton	Efficiency, percent[a]
B	350,000	Natural gas and No. 6 fuel oil	371[b]	1,630[c]	9.3	69
C	300,000	Natural gas	112[d]	490	3.3	294

rates for the 21 tests ranged from 191 to 608 pounds of NO_x per hour. The sources of uncontrolled NO_x emissions in Plant B were tail gas from the NO_x absorber (7,000 ppmv) and fume sweeps of the nitric acid storage tanks (9,000 ppmv).[32] Storage tank NO_x fumes are routed to the boilers. Using the average NO_x emission rate and assuming Plant B operates 24 hours per day, the NO_x emission factor is calculated by dividing the annual NO_x emissions by the annual adipic acid production capacity. This calculation results in a NO_x emission factor of 4.7 kg of NO_x per metric ton of adipic acid produced (9.3 lb/ton). It should be noted that several off-gas streams from various sources are fed into the thermal reduction unit for combustion at Plant B. Therefore, determining the amount of NO_x contributed by the NO_x absorber and the tank fume sweeps is difficult.

The NO_x emissions data for Plant C were taken from a report on emissions from adipic acid plants (1976). No current NO_x emissions data for Plant C were available from the plant or from the State. The NO_x emission rate (determined from a 1976 stack test) from the thermal reduction unit is 112 pounds of NO_x per hour.[30] The NO_x emission factor was determined using the same assumptions as used for Plant B and was calculated to be 1.7 kg of NO_x per metric ton (3.3 lb/ton) of adipic acid produced.

The NO_x concentration in the flue gas of the thermal reduction unit was 1,500 ppm.[30] Although NO_x concentrations as low as 500 ppm were reported to be achievable with this unit, ceramic cracking in the unit resulted from operating at the high temperatures required to produce that level of NO_x concentration.[30]

5.2.3 Other Control Technique

Allied-Signal, Inc., in Hopewell, Virginia, produces about 13,000 tons of adipic acid per year. The adipic acid is produced as a byproduct of their caprolactam plant.[30,35] This plant is unique because it produces a small quantity of adipic acid relative to the other three plants and because, unlike other plants, the NO_x absorber is not the main source of NO_x emissions.

Instead, the major sources of NO_x emissions are the adipic acid reactors and nitric acid storage tanks.[35]

Recent data for NO_x emissions were not available. The NO_x emissions from the adipic acid reactors and the storage tanks are recovered by suction and transferred to the caprolactam side for use in that process.[35] Likewise, the tail gas from the NO_x absorber is routed to the caprolactam process.[30] Allied contends that NO_x emissions are low, although no emissions test data were provided.[35]

5.2.4 Control Technique Performance Summary

Table 5-7 summarizes the NO_x control data for extended absorption and thermal reduction used in adipic acid manufacturing. For each control technique, Table 5-7 presents the level of achievable NO_x control and the NO_x control efficiency (based on an uncontrolled emission factor of 53 lb/ton).

TABLE 5-7. SUMMARY OF NO_x CONTROL TECHNIQUE PERFORMANCE FOR ADIPIC ACID PLANTS

Control technique	Emission factor		Control efficiency, percent[a]
	kg/metric ton	lb/ton	
Extended absorption	3.7	7.4	86
Thermal reduction[b]	4.9 (1.7-8.4)	9.8 (3.3-16.7)	81

[a]Based on an uncontrolled NO_x emission factor of 53 lb/ton.

[b]Based on recent reported data and data in the 1976 adipic acid study. Emission factor is the average of available data. Range is given in parenthesis.

5.3 REFERENCES

1. Review of New Source Performance Standards for Nitric Acid Plants. U. S. Environmental Protection Agency. Research Triangle Park, NC. Publication No. EPA-450/8-84-011. April 1984. Ch. 4: pp. 1-9.

2. Keleti, C. (ed.). Production of Commercial-Grade Nitric Acid. In: Nitric Acid and Fertilizer Nitrates. New York, Marcel Dekker, Inc. 1985. pp. 79-84.

3. Telecon. Boyd, D., Weatherly, Inc., with Lazzo, D., Midwest Research Institute. May 22, 1991. No_x controls for nitric acid plants.

4. Reference 1, p. 4-4.

5. Nitric Acid Plant Inspection Guide. U. S. Environmental Protection Agency. Research Triangle Park, NC. Publication No. EPA-340/1-84-013. August 1984. pp. 25-55.

6. Weatherly, Inc. NO_x Abatement Systems for Nitric Acid Plants: Process Description. Engineering firm's information on catalytic abatement and extended absorption. 5 pp.

7. Reference 1, p. 4-3.

8. Control Techniques for Nitrogen Oxides Emissions from Stationary Sources: Revised 2nd Edition. U. S. Environmental Protection Agency. Research Triangle Park, NC. Publication No. EPA-450/3-83-002. January 1983. Ch. 3: pp. 47-53. Ch. 6: pp. 11-33.

9. Compilation of Air Pollutant Emission Factors: Volume 1: Stationary Point and Area Sources. U. S. Environmental Protection Agency. Research Triangle Park, NC. Publication No. AP-42. September 1985. pp. 5.9.3-6.

10. Reference 1, p. 5-2.

11. Ohsol, E.O. Nitric Acid. In: Encyclopedia of Chemical Processing and Design, J. J. McKetta and W. A. Cunningham (eds.). New York, Marcel Dekker, Inc. 1990. pp. 150-155.

12. Exhaust Control, Industrial. In: Kirk-Othmer Encyclopedia of Chemical Technology. New York, John Wiley & Sons. 1981. pp. 527-530.

13. Blackwood, T.R., and B.B. Crocker. Source Control—Chemical. In: Handbook of Air Pollution Technology, S. Calvert and H. M. Englund (eds.). New York, John Wiley & Sons. 1984. p. 655.

14. N-Ren Corporation. Performance test for nitric acid plant. Prepared for U. S. Environmental Protection Agency, Region 6. St. Paul, MN. October 10, 1978. 84 pp.

15. Nitric Acid Plants: Summaries of Test Data. Nitric acid NSPS Review Report docket reference No. A-83-34, II-A-3. August 1971. 10 pp.

16. Memorandum from J. Eddinger, EPA/ISB, to K. Durkee, EPA/ISB. April 6, 1983. Plant Visit—Columbia Nitrogen Corp.

17. Luck, F. and J. Roiron (Rhone-Poulenc). Selective Catalytic Reduction of NO_x Emitted by Nitric Acid Plants. Catalysis Today. 4: 205-218. 1989.

18. Telecon. S. Shoraka, MRI, with D. Durila, Englehard. July 12, 1991. Discussion of SCR materials used in nitric acid manufacturing plants.

19. Iskandar, R.S. NO_x Removal by Selective Catalytic Reduction, "SCR." Cormetech, Inc. California Clean Air and New Technologies Conference. October 15-17, 1990. 12 pp.

20. Dittmar, H. Catalytic Reduction of NO_x in Nitric Acid Tail Gases. BASF AG. Federal Republic of Germany. Environmental Symposium. Kissimmee, FL. October 24-26, 1984. 24 pp.

21. Telecon. Anderson, D. P., First Chemical Corporation, with Lazzo, D., Midwest Research Institute. July 29, 1991. NO_x control and control cost of SCR at nitric acid plants.

22. Reference 8, p. 6-23.

23. Reference 8, p. 6-20.

24. Reference 8, p. 6-15.

25. Telecon. Snipes, C., Tennessee Valley Authority, with Lazzo, D., Midwest Research Institute. May 22, 1991. TVA chilled absorption process.

26. Reference 8, p. 6-30.

27. Letter from Beck, W.B., E.I. DuPont de Nemours & Company to Roberts, L.R., Texas Air Control Board. July 2, 1986. NO_x controls for Sabine adipic acid facility.

28. Letter from Plant A to Lazzo, D.W., Midwest Research Institute. June 21, 1991. NO_x control at adipic acid plant A.

29. SRI International. Directory of Chemical Producers, United States of America. Menlo Park, CA. 1991. p. 450.

30. Screening Study to Determine Need for Standards of Performance for New Adipic Acid Plants: Final Report. GCA/Technology Division. Bedford, MA. Publication No. GCA-TR-76-16-G. July 1976.

31. APTI Course 415: Control of Gaseous Emissions. U. S. Environmental Protection Agency. Research Triangle Park, NC. Publication No. EPA 450/2-81-005. December 1981. Chapter 3.

32. Letter from Plant B to Neuffer, B., EPA/ISB. June 18, 1991. NO_x control at adipic acid Plant B.

33. Reference 13, p. 668.

34. Telecon. Neuffer, B., EPA/ISB with Plant C. April 10, 1991. NO_x control at adipic acid Plant C.

35. Telecon. Lazzo, D.W., MRI, with Gaillard, R., Allied-Signal Inc. April 16, 1991. NO_x control at adipic acid plant.

6.0 CONTROL COSTS

This chapter presents capital and annual costs and cost effectiveness for the NO_x control techniques used in nitric and adipic acid manufacturing plants. Section 6.1 presents costs for NO_x control techniques used in nitric acid plants. The costs are presented for the following controls: (1) extended absorption, (2) NSCR, and (3) SCR. Section 6.2 presents costs for NO_x control techniques used in adipic acid plants. These costs are for (1) extended absorption and (2) thermal reduction.

Three model plant sizes were used to develop costs for the nitric acid plant NO_x control techniques. These model plant sizes are 181, 454, and 907 metric tons/d (200, 500, and 1,000 tons/d) of nitric acid production (100 percent basis). These three sizes cover the range of most nitric acid plants in the United States. Actual plant sizes were used to develop costs for the adipic acid plant NO_x control techniques.

The capital cost of a control system includes the purchased equipment costs, direct installation costs, and indirect installation costs. Purchased equipment costs are those costs related to purchasing the control equipment. Direct installation costs include costs for foundations and supports, erecting and handling the equipment, electrical work, piping, insulation, and painting. Indirect installation costs include engineering, contractor's fees, construction expenses, and a contingency fee.[1]

Annual costs represent the cost of owning and operating the control system. The total annual cost consists of direct costs, indirect costs, and recovery credits. Direct costs vary with the quantity of exhaust gas processed by the control system and include raw materials, utilities, waste treatment and disposal,

maintenance materials, replacement parts, and operating, supervisory, and maintenance labor. Indirect costs are fixed regardless of the quantity of exhaust gas processed by the control system and include overhead, administrative charges, property taxes, insurance, and capital recovery. Direct and indirect costs are offset by recovery credits, taken for materials or energy recovered by the control system, which may be sold, recycled to the system, or reused elsewhere at the site.[1]

Cost effectiveness is the cost of controlling NO_x emissions by dividing the annual control cost by the quantity of NO_x removed from the exhaust gas stream. Units of cost effectiveness are given in dollars per ton of NO_x removed ($/ton). Annual NO_x emission reduction levels were developed assuming an uncontrolled emission level of 10 kg per metric ton (20 lb/ton), which is equivalent to a NO_x concentration of 1,500 ppm (typical for modern pressure plants), and a controlled emission level based on the average control efficiency of each control technique.

6.1 COSTS OF CONTROL TECHNIQUES USED IN NITRIC ACID PLANTS

This section presents costs for NO_x control systems used in nitric acid plants. Three control systems are analyzed: (1) extended absorption, (2) NSCR, and (3) SCR. Capital and annual costs and cost effectiveness are presented for three model plant sizes: 181, 454, and 907 metric tons/d (200, 500, and 1,000 tons/d) of nitric acid production (100 percent basis). The cost estimates for extended absorption and NSCR are taken from the 1984 NSPS review report. Cost estimates for SCR are based on cost information obtained from an SCR vendor and a U.S. nitric acid plant that uses SCR for NO_x control.

6.1.1 Extended Absorption

This section presents capital and annual costs associated with using extended absorption to control NO_x emissions from nitric acid plants. The extended absorption control system costed in this chapter consists of a secondary absorber and a

closed-loop, chilled-water system for recovering additional nitric acid. This system is described in detail in Chapter 5.

6.1.1.1 **Capital Costs**. Table 6-1

TABLE 6-1. CAPITAL COST SUMMARY FOR NITRIC ACID PLANTS USING EXTENDED ABSORPTION FOR NO_x CONTROL (Costs, $1,000) (January 1991 dollars)

Description	Plant size, metric tons/d (tons/d)		
	181 (200)	454 (500)	907 (1,000)
A. Direct costs			
1. Absorber tower[a]	377	637	933
2. Pumps and drives[b]	88	114	218
3. Chilled water system[c]	23	46	80
4. Piping, valves, and fittings[d]	86	211	333
5. Electrical[e]	50	84	124
6. Instrumentation[f]	50	84	124
Total direct costs (TDC)	674	1,176	1,812
B. Indirect costs			
1. Contractor's fee (6% of TDC)[g]	40	71	109
2. Engineering (10% of TDC)[g]	67	118	181
3. Construction expense (8% of TDC)[g]	54	94	145
Total indirect costs (TIC)	161	283	435
C. Contingency (10% of TOC and TIC)[g]	84	146	225
Total indirect costs (TIC)	161	283	435
Total capital cost (TDC + TIC + contingency)	919	1,600	2,470

[a]Reference 3, pp. 768, 769, 770, 772.
[b]Reference 3, pp. 555, 557, 558.
[c]Reference 4, pp. 265, 278.
[d]Reference 3, pp. 529, 530.
[e]Reference 3, p. 171.
[f]Reference 3, p. 170.
[g]Reference 3, p. 164.

shows the capital costs for an extended absorption system estimated for each of the three model plant sizes. The extended absorber is a bubble tray column with 39 trays, regardless of absorber size. The chilled-water cooling system for the extended absorber consists of a chiller, compressor, condenser, chilled water tank, and the necessary pumps and piping.[2] Estimates of the capital cost are based on published cost data.[3,4]

The purchased equipment cost of each system component was estimated along with installation, labor, and materials costs to obtain the total direct costs. This cost includes all the necessary auxiliaries, such as foundations, insulation, and ladders. The indirect costs were calculated by multiplying the total direct costs by the factor shown for each indirect cost component. All of these costs and factors were taken from References 3 and 4 and escalated to January 1991 dollars using the Chemical Engineering (CE) Plant Cost Index.

6.1.1.2 Annual Costs.

TABLE 6-2. ANNUAL COST SUMMARY FOR NITRIC ACID PLANTS USING EXTENDED ABSORPTION FOR NO_x CONTROL (Costs, $1,000) (January 1991 dollars)

Description	Plant size, metric tons/d (tons/d)		
	181 (200)	454 (500)	907 (1,000)
A. Direct operating costs			
1. Utilities			
a. Water ($0.74/1,000 gal)	19	53	96
b. Electricity ($0.06/kWh)	72	181	390
2. Operating labor			
a. Direct ($22/man-hr)	47	70	95
b. Supervision (20% of direct labor)	9	14	19
3. Maintenance and supplies (4% x capital cost)			
a. Labor and material	37	64	99
b. Supplies			
B. Indirect operating costs			
1. Overhead			
a. Plant (50% x A2 and A3 above)	47	74	107
b. Payroll (20% x A2 above)	11	17	23
2. Fixed costs			
a. Capital recovery (13.5% x capital cost)	124	217	334
b. Insurance, taxes, and G&A (4% x capital cost)	37	64	99
C. Subtotal	403	754	1,260
D. Credit for recovered acid	201	504	1,010
E. Net annualized cost (C-D)	202	250	257

shows the annual costs for an extended absorption system estimated for each of the three model plant sizes. The annual costs include the direct operating costs for the pumps, water chiller, and the extended absorber. Utilities and direct operating labor costs are based on the following estimates:[2]

Annual cost element	Plant size, metric tons/d (tons/d)		
	181 (200)	454 (500)	907 (1,000)
Water, 10^6 gallons	26	72	130
Electricity, 10^6 kW-hr	1.2	3.02	6.5
Labor, man-hr	2,130	3,200	4,330

Indirect operating costs are based on percentage factors applied to direct operating costs and capital costs.

The recovery credit for recovered nitric acid is highly sensitive to the quantity and quality of the recovered acid. Furthermore, although nitric acid prices are quoted in the Chemical Marketing Reporter, these prices are not directly applicable because many nitric acid plants are captive facilities (acid is produced for in-house use, rather than for market use). The value of the recovered acid was calculated based on the following assumptions:

1. Acid production increases by 1.6 percent; and
2. The increased production is a weak acid having a value of $175 per ton.[5]

6.1.1.3 Cost Effectiveness. Table 6-3 shows the cost effectiveness for the three model plants using extended absorption for NO_x control. Cost effectiveness ranges from $83/metric ton ($76/ton) for a 907-metric tons/d (1,000-tons/d) plant to $327/metric ton ($297/ton) for a 181-metric tons/d (200-tons/d) plant. The data show that cost effectiveness improves (i.e., $/ton of NO_x removed decreases) as plant size increases. This improved cost effectiveness is attributed to the nitric acid recovery credit. As Table 6-2 shows, as plant size increases, the acid recovery credit increases at a higher rate

than the direct and indirect operating costs for each plant, resulting in increasingly lower net annual costs. It should be noted, however, that the amount of acid recovery credit is sensitive to the recovery efficiency at each plant and to the value of the recovered acid.[2] In general, the cost of using extended absorption for NO_x control decreases (on a $/ton basis) as plant size increases.

6.1.2 Nonselective Catalytic Reduction

This section presents capital and annual costs associated with using NSCR to control NO_x emissions from nitric acid plants. Although nonselective reduction of tail gas pollutants is generally considered a part of the process (because of the recovery of heat), it is generally recognized that some portion of the system constitutes air pollution control. A detailed description of an NSCR unit and its operation are provided in

TABLE 6-3. COST EFFECTIVENESS FOR MODEL PLANTS USING EXTENDED ABSORPTION FOR NO_x CONTROL (January 1991 dollars)

Plant size, metric tons/d (tons/d)	Annual cost, $1,000/yr	NO_x removed, metric tons/yr (tons/yr)	Cost effectiveness, $/metric ton NO_x ($/ton NO_x)
181 (200)	202	617 (679)	327 (297)
454 (500)	250	1,550 (1,700)	161 (147)
907 (1,000)	257	3,090 (3,400)	83 (76)

Chapter 5. For costing purposes, it is assumed that the catalytic treatment unit, the catalyst, the short run of pipe on either side of the unit for the gases, and the fuel lines comprise the air pollution control system.

6.1.2.1 Capital Costs. Because of the proprietary nature of the cost information, no current detailed capital cost data for an NSCR unit could be obtained. Therefore, capital costs are based on cost data in the 1984 NSPS review report. In that report, the capital costs of an NSCR unit are based on a turnkey price of $2.3 million (January 1983) which includes the cost of the catalytic unit and the catalyst. The capital costs are determined for the model plants by applying the Six-Tenths Power Rule to this cost. Escalating to January 1991 dollars using the CE Plant Cost Index, capital costs for an NSCR system are as follows:[2]

Plant size, metric tons (tons/d)	Capital cost, $\$10^6$/d (January 1991 dollars)
181 (200)	1.07
454 (500)	1.86
907 (1,000)	2.82

6.1.2.2 **Annual Costs**. Table 6-4

TABLE 6-4. ANNUAL COST SUMMARY FOR NITRIC ACID PLANTS USING NONSELECTIVE CATALYTIC REDUCTION FOR NO_x CONTROL (Costs, $1,000) (January 1991 dollars)

Description	Plant size, metric tons/d (tons/d)		
	181 (200)	454 (500)	907 (1,000)
A. Direct operating costs			
1. Utilities			
a. Natural gas (net of recovered heat) at $4.12/MMBtu	216	546	1,080
2. Operating labor			
a. Direct ($22/man-hr)	16	16	16
b. Supervision (20% of direct labor)	3	3	3
3. Maintenance and supplies (4% x capital cost)	43	74	113
a. Labor and material			
b. Supplies			
B. Indirect operating costs			
1. Overhead			
a. Plant (50% x A2 and A3 above)	31	47	66
b. Payroll (20% x A2 above)	4	4	4
2. Fixed costs			
a. Capital recovery (13.5% x capital cost)	145	251	381
b. Insurance, taxes, and G&A (4% x capital cost)	43	74	113
C. Total	501	1,010	1,780

shows the annual costs for an NSCR system estimated for the three model plant sizes. The direct costs consist of the fuel (natural gas assumed) used in the catalytic reduction unit, operating and maintenance labor, and supplies.

Effective fuel use is reduced by postoxidation heat recovery. A unit that treats 30.1 m^3/s (64,000 standard cubic feet per minute [scfm]) of tail gas consumes about 1,240 m^3 (45,000 ft^3) of natural gas per hour. The heat content of this quantity of natural gas is about 45.6 gigajoules (GJ) (43 million Btu), of which 23.5 GJ (22.2 million Btu), or 52 percent, is recovered downstream. Consequently, the net energy requirement is about 5.74 megajoules (MJ) per 28.3 m^3 (5.42 thousand Btu/1,000 scf) of tail gas.[2] Utilities and direct operating labor costs are based on the following:

Annual cost element	Plant size, metric tons/d (tons/d)		
	181 (200)	454 (500)	907 (1,000)
Natural gas, 10^6 Btu	52,500	130,000	263,000
Labor, man-hr	733	733	733

Direct operating labor is estimated at 0.5 man-hr per shift, regardless of the unit size. As with the extended absorption system, maintenance and supplies are estimated at 4 percent of the capital cost (including the average cost of catalyst replacement). Reportedly, the catalyst must be replaced every 3 to 8 years at a cost of about $517,000 for a plant producing 816 metric tons/d (900 tons/d).[2] Therefore, the estimated average annual cost of catalyst replacement (5-year life) at the model plants is:[2]

Plant size, metric tons (tons/d)	Capital cost, $\$10^6$/d (January 1991 dollars)
181 (200)	20.7
454 (500)	53.2
907 (1,000)	104.9

Estimates of indirect operating costs are based on percentage factors applied to direct operating costs and capital costs.

6.1.2.3 <u>Cost Effectiveness</u>. Table 6-5 shows the cost effectiveness for the three model plants using NSCR for NO_x control. Cost effectiveness ranges from $639 per metric ton ($581 per ton) of NO_x removed in a 907-metric tons/d (1,000-tons/d) plant to $904/metric ton ($823/ton) of NO_x removed in a 181-metric tons/d (200-tons/d) plant. In comparison with the cost-effectiveness data for extended absorption (Table 6-3), NSCR is considerably less cost effective. This effect can be

TABLE 6-5. COST EFFECTIVENESS FOR MODEL PLANTS USING NONSELECTIVE CATALYTIC REDUCTION FOR NO_x CONTROL (January 1991 dollars)

Plant size, metric tons/d (tons/d)	Annual cost, $1,000/yr	NO_x removed, metric tons/yr (tons/yr)	Cost effectiveness, $/metric ton NO_x ($/ton NO_x)
181 (200)	501	637 (701)	786 (715)
454 (500)	1,015	1,600 (1,760)	634 (580)
907 (1,000)	1,778	3,190 (3,510)	557 (507)

attributed to higher utilities costs for NSCR and the lack of any recovery credit.

6.1.3 Selective Catalytic Reduction

This section presents the costs associated with using SCR to control NO_x emissions from nitric acid plants. Capital costs are presented in Section 6.1.3.1; annual costs are presented in Section 6.1.3.2; and Section 6.1.3.3 presents cost effectiveness.

6.1.3.1 Capital Costs. Table 6-6

TABLE 6-6. CAPITAL COST SUMMARY FOR NITRIC ACID PLANTS USING SELECTIVE CATALYTIC REDUCTION FOR NO_x CONTROL (Costs, $1,000)[a] (January 1991 dollars)

Description	Plant size, metric tons/d (tons/d)		
	181 (200)	454 (500)	907 (1,000)
A. Direct Costs			
1. Catalyst vessel	35	50	65
2. Catalyst capital cost	45	100	190
3. Grid[b]	0-30	0-30	0-30
4. Blowers[c]	0-30	0-30	0-30
5. Instrumentation[d]	40-200	40-200	40-200
Total direct costs (TDC)	120-340	190-410	295-515
B. Indirect Costs			
1. Contractor's fee (6% TDC)	7.2-20.4	11.4-24.6	17.7-30.9
2. Engineering (10% TDC)	12-34	19-41	29.5-51.5
3. Construction (8% TDC)	9.6-27.2	15.2-32.8	23.6-41.2
Total indirect costs (TIC)	28.8-81.6	45.6-98.4	70.8-123.6
C. Contingency (10% TDC and TIC)	14.9-42.2		36.6-63.9
Total capital investment (TCI) = (TDC + TIC + contingency)	164-464	259-559	402-703
Average TCI	314	409	553

[a]Based on cost estimates provided by SCR vendor.
[b]Based on size of grid required. In some cases, no grid is required ($0).
[c]Based on temperature requirements of blower. In some cases, no blower is required.
[d]Dependent on sophistication of instrumentation.

shows the capital costs for an SCR system estimated for each of the three model plant sizes. The estimated costs were provided by a catalyst manufacturer (Engelhard Corporation) based on the following information:[6]

Plant size, metric tons (tons/d)	Stack flow rate, scfm
181 (200)	15,000
454 (500)	34,000
907 (1,000)	60,000

Nitric acid concentration: 58 percent nitric acid

Absorber tail gas NO_x content: (1,500 ppm) equal amounts of NO and NO_2

Absorber tail gas O_2 content: 3 percent O_2

Temperature (inlet of SCR): 355°C (671°F)

Pressure (inlet of SCR): 612 kPa (90 psi)

Ammonia slip: 10 ppm

Control efficiency: 86 percent reduction (based on reduction to 209 ppm)

Catalyst: vanadia-titania over honeycomb substrate

The total capital cost of the SCR system depends on the design and requirements of the system. Capital cost variability is attributed to three system components: the grid, blowers, and instrumentation. Depending on the size of the catalyst vessel, an injection "grid" may be required to ensure an even distribution of ammonia across the face of the catalyst. A grid is usually required for large SCR units. The cost for a grid ranges as high as $30,000, depending on injection system requirements.[6]

Blowers may be required if air is used as a carrier for the ammonia. The blowers are used to overcome the pressure within the catalyst vessel. The temperature of the carrier air affects the cost of the blowers. If recirculated flue gas is used, high-temperature-resistant blowers are required, consequently increasing the cost. Capital cost for the blowers can range as high as $30,000, depending on the type of blower used.[6] The need

for blowers can be eliminated if pressurized steam is used as the carrier.[7]

Instrumentation is used to monitor unconverted NO_x and/or ammonia slip in the exhaust stream. The cost of the instrumentation varies from $40,000 to $200,000 depending on the degree of sophistication. Degree of sophistication ranges from simple gas flow meters to equipment capable of data acquisition and trend analysis.[6]

Capital costs were also provided by First Chemical Corporation in Pascagoula, Mississippi. First Chemical is a new nitric acid plant (producing 250 tons/d) that conducted compliance testing in April 1991. The SCR system was purchased and installed as part of a turnkey package; therefore, no SCR component costs could be determined directly.[8] However, First Chemical provided an estimate of the capital costs of the SCR system. The capital costs (reported in October 1989 dollars) were escalated to January 1991 dollars using the CE Plant Cost Index and are as follows:[8]

Description	Cost, $1,000
Catalytic vessel and catalyst	500
Pumps, piping, electrical	8
Instrumentation	15
Installation	25
Total capital investment (TCI)	548

First Chemical was contacted to determine the type of SCR catalyst in use. Although the catalytic material was not known, the catalyst substrate was reported to be a pellet type.[9]

6.1.3.2 Annual Costs. Table 6-7

TABLE 6-7. ANNUAL COST SUMMARY FOR NITRIC ACID PLANTS USING SELECTIVE CATALYTIC REDUCTION FOR NO_x CONTROL (Costs, $1,000)[a] (January 1991 Dollars)

Description	Plant size, metric tons/d (tons/d)		
	181 (200)	454 (500)	907 (1,000)
A. Direct Operating Costs			
1. Anhydrous ammonia	100	325	550
2. Maintenance and supplies (4% of TCI)	13	16	22
3. Catalyst replacement (CRF [5 yr, 10%] x catalyst cost)	11.9	26.4	50.1
B. Indirect Operating Costs			
1. Overhead Plant (60% of A2)	7.8	9.6	13.2
2. Administration (2% of TCI)	6.3	8.2	11.1
3. Insurance (1% of TCI)	3.1	4.1	5.5
4. Property taxes (1% of TCI)	3.1	4.1	5.5
5. Capital recovery {CFR (10 yr, 10%) x [TCI - (1.08 x cat. cap. cost]}	43.2	49	56.6
Total annual cost (TAC)	188	442	714

[a]Based on cost estimates provided by SCR vendor.

shows the annual costs for an SCR system estimated for the three model plant sizes based on cost estimates provided by Engelhard. The cost factors and estimating procedure are based on guidelines for annual costs of catalytic incinerators from the OAQPS Control Cost Manual.[1] Annual anhydrous ammonia costs ranged from $100,000 to $550,000 depending on the plant size. Using aqueous ammonia will reduce the per-tank cost, but the annual cost will increase due to the required increase in ammonia consumption.[6] Capital recovery cost is based on the average total capital investment for each model plant size. Total annual costs based on estimates from the catalyst manufacturer range from $188,000 for the 181 kg per metric ton per day (200 ton/d) plant to $714,000 for the 907 kg per metric ton per day (1,000 ton/d) plant.

Annual costs for an SCR system were also estimated based on information obtained from First Chemical Corporation. The annual costs for SCR used in a 250 ton/d nitric acid plant are as follows:[8]

Description	Cost, $1,000
A. Direct operating costs	
1. Anhydrous ammonia	44.7
2. Maintenance and supplies (4 percent of TCI)	22
3. Catalyst replacement [CRF (5 yr, 10 percent) x catalyst cost]	73.9
B. Indirect operating costs	
1. Overhead plant (60 percent of A2)	13.2
2. Administrative (2 percent of TCI)	11
3. Insurance (1 percent of TCI)	5.5
4. Property taxes (1 percent of TCI)	5.5
5. Capital recovery {CFR (10 yr, 10 percent) x [TCI - (1.08 x cat. cap. cost)]}	76.2
Total annual cost (TAC)	252

Annual ammonia cost was estimated based on a pure ammonia injection rate of 9 scfm and a unit cost of $400 per ton of anhydrous ammonia. The unit cost of ammonia is an average of costs that were obtained from three sources.[10,11,12] The catalyst cost was estimated to be 56 percent of the combined cost of the catalyst and catalyst vessel. This factor (56 percent) was based on catalyst costs for a similarly sized plant.[6]

The estimated total annual cost of the SCR in operation at First Chemical (250 ton/d) is $252,000. The estimated total annual cost of the SCR unit for a 200 ton/d plant based on costs supplied by the catalyst vendor is $188,000. Comparing these two annual costs (relative to respective plant size), it is evident that the vendor-estimated costs are in line with actual annual costs.

6.1.3.3 <u>Cost Effectiveness</u>. Table 6-8

TABLE 6-8. COST EFFECTIVENESS FOR NITRIC ACID PLANTS USING SELECTIVE CATALYTIC REDUCTION FOR NO_x CONTROL (January 1991 dollars)

Plant size, metric tons/d (tons/d)	Annual cost, $1,000/yr	NO_x removed, metric tons/yr (tons/yr)	Cost effectiveness, $/metric ton NO_x ($/ton NO_x)
181 (200)	501[a]	637 (701)[b]	786 (715)
454 (500)	1,015[a]	1,600 (1,760)[b]	634 (580)
907 (1,000)	1,778[a]	3,190 (3,510)[b]	557 (507)
227 (250)	252[c]	794 (873)[d]	318 (289)

[a]Reference 7.
[b]Based on 86 percent control efficiency.
[c]Reference 8.
[d]Based on 97.2 percent control efficiency.

shows the cost effectiveness for the three model plants and the actual plant. The cost effectiveness ranges from $255/metric ton ($232/ton) of NO_x removed in a 907 metric tons/d (1,000 tons/d) plant to $336/metric ton ($305/ton) of NO_x removed in a 181 metric tons/d (200 tons/d) plant. These cost effectiveness estimates are based on cost information supplied by Engelhard (SCR catalyst vendor) and indicate the cost (on a $/ton-of-$NO_x$-removed basis) of reducing NO_x emissions from an uncontrolled level of 20 lb/ton down to 3.0 lb/ton.[6] This reduction represents an 86 percent NO_x control efficiency.

Cost effectiveness based on information obtained from a 250 tons/d nitric acid plant using SCR (First Chemical) is estimated to be $318/metric ton ($289/ton) of NO_x removed. This cost effectiveness is based on a 97.2 percent reduction efficiency.[8]

6.2 COSTS OF CONTROL TECHNIQUES USED IN ADIPIC ACID PLANTS

This section presents costs for NO_x control systems used in adipic acid plants. Two NO_x control systems are analyzed: (1) extended absorption and (2) thermal reduction. Cost information was requested from all three adipic acid plants that use these controls. However, detailed cost data were not provided. Available capital and annual costs and cost effectiveness for extended adsorption and thermal reduction are presented in Sections 6.2.1 and 6.2.2, respectively.

6.2.1 Extended Absorption

This section presents the costs associated with using extended absorption to control NO_x emissions from adipic acid plants. Capital costs are presented in Section 6.2.1.1; annual costs are presented in Section 6.2.1.2; and Section 6.2.1.3 presents cost effectiveness for extended absorption.

6.2.1.1 Capital Costs. The capital costs for extended absorption are based on cost data obtained from the single plant that uses this control technique. Plant A reported a total capital investment of $2.5 million (1986 dollars) for its single-tower extended absorption system.[13] No details on the components of the capital costs were provided by Plant A. This type of

system is described in detail in Chapter 5. In this case, the extended absorber was installed as a retrofit control device. The capital cost of this extended absorption system is $2.83 million.[13]

6.2.1.2 <u>Annual Costs</u>. Table 6-9

TABLE 6-9. ANNUAL COSTS FOR AN ADIPIC ACID PLANT USING EXTENDED ABSORPTION FOR NO_x CONTROL (January 1991 dollars) Plant A (190,000 tons/yr)

Description	Cost, $1,000
A. Direct operating costs[a] Utilities and maintenance	25
B. Indirect operating costs	
1. Overhead	
a. Plant--50% of maintenance	6.25
2. Fixed costs	
a. Capital recovery (13.5 percent x capital cost)	382
b. Insurance, taxes, and G&A (4% x capital cost)	113
C. Subtotal	526
D. Credit for recovered acid[b]	(101)
E. Net annualized cost	425

[a]Based on reported annual cost of $25,000 for maintenance and utilities.
[b]Based on the following:

1. Estimated production of 300 tons/d of 20 percent nitric acid;
2. 1.6 percent increase in nitric acid recovery;
3. Market price of $175/ton of 60 percent nitric acid; and
4. Operating 359 d/yr.

presents the estimated annual costs for an extended absorption system used for NO_x control in an adipic acid plant. The procedure used to estimate the annual costs closely follows the annual cost estimating procedure used for extended absorption systems in nitric acid plants. An operating cost of $25,000, reported by Plant A, includes maintenance and utilities. Operating labor costs, usually included in the direct operating costs, were reported to be "minimal" by Plant A.[13] Therefore, operating labor cost was assumed to be zero. The credit for recovered nitric acid was determined by estimating the quantity of nitric acid recovered based on flow rates from a larger plant. Following the acid recovery credit procedure for nitric acid plants:[2]

1. Nitric acid recovery increases by 1.6 percent; and
2. The nitric acid recovered has a value of $175 per ton.[3]

The price of nitric acid ($175/ton) is for acid with a 60 percent concentration. Nitric acid recovered in the adipic acid production process has a concentration of only 20 percent. Consequently, the price used to calculate the acid recovery credit is one-third of the quoted material price, or approximately $58 per ton of nitric acid recovered.

The estimated annual cost for extended absorption, before the acid recovery credit, is $526,000. Including the credit for recovered nitric acid ($101,000), the net annual cost for extended absorption used for NO_x control in a 173,000 metric ton/yr (190,000 ton/yr) adipic acid plant is $425,000.

6.2.1.3 <u>Cost Effectiveness</u>. The cost effectiveness of extended absorption was calculated by dividing the annual cost by the quantity of NO_x removed. The data are as follows:

Plant size, metric tons/d (tons/d)	Annual cost, $1,000/yr	NO_x removed, metric tons/yr (tons/yr)	Cost effectiveness, $/metric ton NO_x ($/ton NO_x)
173,000	425	3,940	108
(190,000)		(4,330)	(98)

The NO_x reduction presented above was calculated based on an uncontrolled NO_x emission factor of 26.5 kg/metric ton (53 lb/ton) and a controlled NO_x emission factor of 3.7 kg/metric ton (7.4 lb/ton). It should be noted that cost effectiveness is highly sensitive to the quality and quantity of nitric acid recovered as well as fluctuation in market price.

6.2.2 Thermal Reduction

This section presents the costs associated with using thermal reduction to control NO_x emissions from adipic acid plants. Sections 6.2.2.1 and 6.2.2.2 present the capital and annual costs, respectively. Cost effectiveness is presented in Section 6.2.2.3.

6.2.2.1 Capital Costs. Capital costs are based on reported cost data from the two adipic acid plants using thermal reduction for NO_x control. Plant B reported the current (1991) total replacement cost of its thermal reduction system, which consists of four boilers.[14] Plant C reported the cost of their thermal reduction system, a furnace, in 1990 dollars.[15] The cost for Plant C was escalated to January 1991 dollars using the CE Plant Cost Index. The capital costs of the respective thermal reduction units for Plants B and C are as follows:

Plant	Production capacity, tons/yr	Capital cost, $\$10^6$ (January 1991 dollars)
B	350,000	8.00
C	300,000	7.05

6.2.2.2 **Annual Costs**. Table 6-10

TABLE 6-10. ANNUAL COSTS FOR ADIPIC ACID PLANTS USING THERMAL REDUCTION FOR NO_x CONTROL[a] (January 1991 dollars)

Description	Costs, $1,000	
	Plant B (350,000 tons/yr)	Plant C (300,000 tons/yr)
A. Direct operating costs		
1. Operating labor		
a. Operator ($13.6/man-hr)(0.5 hr/shift)[b]	7.45	7.45
b. Supervisor (15% of operator)	1.12	1.12
2. Maintenance		
a. Labor ($15/man-hr)(0.5 hr/shift)[b]	8.21	8.21
b. Material (100% of maintenance labor)	8.21	8.21
3. Utilities		
Natural gas	2,050	1,760[c]
B. Indirect operating costs		
1. Overhead (60% of A1 + A1)	15	15
2. Administrative [2% of total capital investment (TCI)]	160	141
3. Insurance (1% of TCI)	80	70.5
4. Property taxes (1% of TCI)	80	70.5
5. Capital recovery [CRF (10 yr, 10%) x TCI]	1,300	1,150
Total annual cost (rounded)	3,720	3,240

[a]Costs calculated using reported cost data in conjunction with OAQPS Control Cost Manual format.
[b]Based on operating time of 24 hr/d; 365 d/yr.
[c]Natural gas consumption scaled from Plant B consumption based on plant capacities for Plants B and C.

shows the annual costs for a thermal reduction system estimated for Plants B and C. The cost factors and estimates are based on guidelines for annual costs of thermal incinerators from the OAQPS Control Cost Manual.[16] Plant B reported an annual cost of $2.05 million for natural gas based on a natural gas price of $2.09 per thousand standard cubic feet of gas.[14] Natural gas consumption for Plant C was estimated using the consumption rate reported by Plant B and scaling that rate for Plant C based on the production capacities of each plant. Annual costs for Plant C were subsequently estimated using the estimated natural gas consumption rate. Total annual costs for Plants B and C are estimated to be $3.72 and $3.24 million per year, respectively.

Thermal reduction units generate heat through combustion. Heat from these units is usually recovered as steam for use elsewhere at the facility. The thermal reduction unit at Plant C produces 50,000 lb/hr of steam.[15] It should be noted that the annual costs estimated in Table 6-10 do not include a credit for the recovered heat. No data are available to determine the amount of such a heat recovery credit, although total plant annual cost would be reduced.

6.2.2.3 Cost Effectiveness. Table 6-11

TABLE 6-11. COST EFFECTIVENESS FOR ADIPIC ACID PLANTS USING THERMAL REDUCTION FOR NO_x CONTROL (January 1991 dollars)

Plant size, metric tons/d (tons/d)	Annual cost, $1,000/yr	NO_x removed, metric tons/yr (tons/yr)	Cost effectiveness, $/metric ton NO_x ($/ton NO_x)
273,000 (300,000)	3,240	6,370 (7,010)	509 (462)
318,000 (350,000)	3,720	7,430 (8,170)	501 (455)

[a]Based on reduction NO_x emission from 53 lb/ton (uncontrolled emission factor) to 6.3 lb/ton (average controlled emission factor.

shows the cost presents the cost effectiveness for thermal reduction units used at two adipic acid plants. The cost effectiveness for the two plants is $509/metric ton ($462/ton) of NO_x removed for the 300,000 ton/yr plant and $501/metric ton ($455/ton) of NO_x removed for the 350,000 ton/yr plant. These cost effectiveness figures are based on an uncontrolled NO_x emission factor of 26.5 kg/metric ton (53 lb/ton) to a controlled NO_x emission factor of 3.2 kg/metric ton (6.3 lb/ton). Comparing the cost effectiveness for thermal reduction with that for extended absorption ($108/metric ton [$98/ton]), it is clear that thermal reduction reduces NO_x emissions at a much higher cost. The higher cost of NO_x removal for thermal reduction can be partly attributed to the cost of the fuel. However, credit for heat recovery would improve the cost effectiveness of thermal reduction.

6.3 REFERENCES

1. OAQPS Cost Control Manual: 4th Edition. U. S. Environmental Protection Agency. Research Triangle Park, NC. Publication No. EPA-450/3-90-006. January 1990. Ch. 2: pp. 5-9.

2. Review of New Source Performance Standards for Nitric Acid Plants. U. S. Environmental Protection Agency. Research Triangle Park, NC. Publication No. EPA-450/8-84-011. April 1984. Ch. 6.

3. Peters, M. and K. Timmerhaus. Plant Design and Economics for Chemical Engineers. 3rd Edition. McGraw-Hill, New York, NY. 1980.

4. Means, R. Building Construction Cost Data. 1983.

5. Nitric Acid. In: Chemical Marketing Reporter. New York, Schnell Publishing Company, Inc. 1991.

6. Letter from Adams, G. B., Engelhard Corporation to Lazzo, D., Midwest Research Institute. August 15, 1991. Costs for an SCR system for model plants.

7. Telecon. Lazzo, D., Midwest Research Institute, with Adams, G. B., Engelhard Corporation. August 19, 1991. SCR used in nitric acid plants.

8. Telecon. Lazzo, D., Midwest Research Institute, with Anderson, D. P., First Chemical Corporation. July 29, 1991. Control performance and costs for an SCR system.

9. Telecon. Lazzo, D., Midwest Research Institute, with Marks, D., First Chemical Corporation. August 20, 1991. SCR used at First Chemical.

10. Permit Application Processing and Calculations by South Coast Air Quality Management District for proposed SCR control of gas turbine at Saint John's Hospital and Health Center, Santa Monica, CA. May 23, 1989.

11. Letter and attachments from Henegan, D., Norton Company, to Snyder, R., MRI. March 28, 1991. Response to SCR questionnaire.

12. Champagne, D. SCR Cost-Effective for Small Gas Turbines. Cogeneration. January-February 1988. pp. 26-29.

13. Letter from Plant A to Lazzo, D. W., Midwest Research Institute. June 21, 1991. NO_x control at adipic acid Plant A.

14. Letter from Plant B to Neuffer, B., U. S. Environmental Protection Agency, Industrial Studies Branch. June 18, 1991. NO_x control at adipic acid Plant B.

15. Telecon. Neuffer, B., U. S. Environmental Protection Agency, Industrial Studies Branch, with Plant C. April 10, 1991. NO_x control at adipic acid Plant C.

16. Reference 1, Chapter 3: pp. 51-58.

7.0 ENVIRONMENTAL AND ENERGY IMPACTS

This chapter presents the environmental and energy impacts of control techniques (described in Chapter 5.0) used to control NO_X emissions from nitric and adipic acid manufacturing plants. The impacts of these control techniques on air pollution, solid waste disposal, water pollution, and energy consumption are discussed. Section 7.1 discusses impacts for nitric acid manufacturing plants; Section 7.2 discusses impacts for adipic acid manufacturing plants; and Section 7.3 presents references used in this chapter.

7.1 NITRIC ACID MANUFACTURING

The control techniques used to reduce NO_X emissions from nitric acid manufacturing plants include extended absorption, NSCR, and SCR. Section 7.1.1 presents air pollution impacts; Section 7.1.2 presents solid waste disposal impacts; and Section 7.1.3 presents energy consumption impacts for each of these control techniques. Wastewater impacts are not discussed because liquid effluent waste is not generated by any of the control techniques.

7.1.1 Air Pollution

7.1.1.1 NO_x Emissions. Estimates of NO_X emission reductions achievable through the application of extended absorption, NSCR, and SCR for the three model plants were presented in Chapter 6 and are shown in Table 7-1

TABLE 7-1. NO_x EMISSIONS FROM NITRIC ACID MANUFACTURING PLANTS

Plant size, tons/d		Uncontrolled NO_x emissions, tons/yr	Controlled NO_x emissions, tons/yr		
			Extended absorption	NCSR	SCR
200	Emissions	718		39	17
	Emission reduction			679	701
	% reduction			94.6	97.7
500	Emissions	1,800		100	40
	Emission reduction			1,700	1,760
	% reduction			94.6	97.7
1,000	Emissions	3,590	190	80	
	Emission reduction		3,400	3,510	
	% reduction		94.6	97.7	
250	Emissions				25
	Emission reduction				873
	% reduction				97.2

Note: SCR information based on data provided by First Chemical Corporation.

. For each of the three model plants, the uncontrolled level and controlled NO_X emissions, emission reduction, and percent reduction are presented.

For this analysis, the amount of NO_X removed represents a reduction from an uncontrolled level of 10 kg/metric ton (kg/ton) (20 lb/ton), which is equivalent to a NO_x concentration of 1,500 ppm (typical for modern pressure plants), to a controlled level based on average control efficiencies (shown in Table 5-5) achievable with each of the three control technologies. Nitrogen oxide emissions are reduced from the uncontrolled level by 94.6 percent for extended absorption, by 97.7 percent for NSCR, and by 70.8 percent for SCR. The data on NO_x emissions from plants with SCR units are from European plants where less stringent standards are imposed. The SCR is used to reduce NO_x emissions to required levels only.

7.1.1.2 <u>Emissions Trade-Offs</u>.

7.1.1.2.1 <u>CO and HC emissions from NSCR</u>. Using NSCR to control NO_X emissions increases HC and CO emissions. Fuel is added in the NSCR unit to react with NO_X and oxygen to form elemental nitrogen, water, and carbon dioxide. Fuel must be added in excess of stoichiometry to ensure completion of the NO_x reduction reactions.[1] However, as the ratio of fuel to oxygen increases, HC and CO emissions also increase because of incomplete combustion caused by the fuel-rich conditions in the unit. The quantity of these emissions is site-specific and varies with different plant operating parameters.

7.1.1.2.2 <u>NH_3 emissions from SCR</u>. The SCR process reduces NO_x emissions by injecting NH_3 into the flue gas to react with NO_x to form elemental nitrogen and water. The NH_3/NO_X ratio affects the NO_X removal efficiency of this unit. Higher ratios increase amounts of NO_X removed but also increase the probability of unreacted ammonia's passing through the catalyst unit into the atmosphere (known as "ammonia slip"). Figure 5-5 illustrates NO_X removal efficiency and NH_3 slip as a function of NH_3/NO_X mole ratio. Gas residence time in the catalyst unit can also have an impact on the amount of NH_3 slip. As the residence time of the

flue gas within the unit decreases, NO_x removal efficiency also decreases, thereby increasing the amount of unreacted NH_3. Figure 5-6 illustrates NO_x removal efficiency and NH_3 slip as a function of area velocity.

7.1.2 Solid Waste Disposal

Catalytic materials used in reduction units typically have a 3- to 8-year life expectancy for NSCR units and a 5- to 10-year life expectancy for SCR units.[2,3] When the catalyst no longer functions as designed, the catalyst materials will need to be disposed of.

The catalyst materials predominantly used in NSCR are platinum and mixtures of platinum and rhodium. Base metal oxides (e.g., titania/vanadia), precious metal oxides (e.g., platinum/rhodium, palladium), and zeolites can be used as catalyst materials in SCR units. Titania/vandia is the catalyst material most commonly used at nitric acid manufacturing plants with SCR.[4] This material is considered hazardous and therefore must be treated and disposed of as such. Disposal problems are not encountered with the other materials because they are not identified as hazardous wastes.

7.1.3 Energy Consumption

Additional electrical energy is required over the uncontrolled level for extended absorption and SCR, while additional fuel energy is required for NSCR. These energy impacts are described below.

Extended absorption requires additional electrical energy to operate the pumps used to maintain the absorber inlet gas pressure at the required level of at least 730 kPa. For both single- and double-tower extended absorption systems, additional electrical energy is also required to operate a closed-loop refrigeration system used to cool water in the "extended" portion of the tower. The extent of the increase in electricity usage is specific to each nitric acid manufacturing plant. This increase in electricity usage is presented in Table 7-2

TABLE 7-2. ANNUAL ELECTRICITY REQUIREMENTS FOR EXTENDED ABSORPTION AND ANNUAL FUEL REQUIREMENTS FOR NSCR

Model plant size, metric tons/d (tons/d)	Extended absorption electricity usage		NSCR net fuel requirements	
	10^6 MJ/yr	10^6 kwh/yr	10^6 MJ/yr	10^6 Btu/yr
181 (200)	4.3	1.2	55.3	52,500
454 (500)	10.9	3.02	140	132,500
907 (1,000)	23.4	6.5	277	262,500

for each of the three model plants.[2]

For SCR systems, additional electrical energy is required to operate ammonia pumps and ventilation fans. This energy requirement is believed to be minimal and therefore was not included in this analysis.

The NSCR process requires additional fuel energy but at the same time generates a significant amount of heat, which can be recovered in a waste heat boiler and a tail gas expander. This recovered heat can supply the energy for process compression needs with additional steam available for export.[5] The amount of energy recovered in this process lessens the impact of the additional fuel requirements by reducing the effective fuel use. The additional energy requirements and the energy recovery options are site-specific to each nitric acid manufacturing plant. As discussed in Section 6.1.2.2, the net fuel requirements for each of the three model plants are presented in Table 7-2.[2]

7.2 ADIPIC ACID MANUFACTURING

The control techniques used to reduce NO_X emissions from adipic acid manufacturing plants include extended absorption and thermal reduction. Section 7.2.1 presents air pollution impacts and Section 7.2.2 presents energy consumption impacts for each of these control techniques. Solid waste disposal and wastewater impacts are not discussed because these wastes are not generated by either of the control techniques.

7.2.1 Air Pollution

7.2.1.1 NO_X Emissions. Estimates of NO_X emission reductions achievable through applying extended absorption (Plant A) and thermal reduction (Plants B and C) are presented in Table 7-3

TABLE 7-3. NO_x EMISSIONS FROM ADIPIC ACID MANUFACTURING PLANTS

Plant size, tons/yr		Uncontrolled NO_x emissions, tons/yr	Controlled NO_x emissions, tons/yr	
			Extended absorption	Thermal reduction
A. 190,000	Emissions Emissions reduction % reduction	5,040	703 4,340 86.1	--
B. 350,000	Emissions Emissions reduction % reduction	9,280	--	1,720 7,560 81.5
C. 300,000	Emissions Emissions reduction % reduction	7,950	--	1,470 6,480 81.5

. For each plant, the uncontrolled and controlled emissions, emission reduction, and percent reduction are presented.

Uncontrolled NO_X emissions are based on an emission factor of 26.5 kg/metric ton (53 lb/ton) of adipic acid produced. This is a typical level for uncontrolled adipic acid manufacturing plants. Controlled NO_X emissions are based on an emission factor of 3.7 kg/metric ton (7.4 lb/ton) of adipic acid produced for plants using extended absorption (Plant A) and on 3.2 kg/metric ton (6.3 lb/ton) of adipic acid produced for plants using thermal reduction (Plants B and C). Nitrogen oxide emissions from adipic acid manufacturing plants are reduced by 86.1 percent using extended absorption and by 81.5 percent using thermal reduction.

7.2.1.2 <u>CO and HC Emissions From Thermal Reduction</u>. Depending on combustion conditions in the thermal reduction unit, this method of controlling NO_X emissions may produce CO and HC emissions. Fuel is added in the thermal reduction unit to react with oxygen and NO_X (in the absorber tail gas) to produce elemental nitrogen, carbon dioxide and water. Adding fuel in excess of stoichiometric amounts will ensure complete NO_X reduction reactions. However, this excess fuel in the thermal reduction unit can result in incomplete combustion and, consequently, CO and HC emissions. Data are not available to quantify the amount of increased CO and HC emissions for the three plants discussed in Section 7.2.1.1.

7.2.2 <u>Energy Consumption</u>

Additional electrical energy is required over the uncontrolled level for extended absorption, while additional fuel energy is required for thermal reduction.

Extended absorption requires additional electrical energy to operate the pumps used to maintain the absorber inlet gas pressure at a required level. The extent of this increase in electricity usage is specific to each individual plant. These requirements are not known for the plant discussed in previous sections.

The thermal reduction process requires additional fuel energy over the uncontrolled level but at the same time generates

a significant amount of heat, which can be recovered. Two adipic acid manufacturing plants (Plants B and C) that utilize thermal reduction for NO_X control produce steam with the heat generated from the control system.[6,7] Plant C (300,000 tons/yr) produces approximately 50,000 lb/hr of steam from the thermal reduction unit.[7] Plant B (350,000 tons/yr) consumes approximately 983 $MMft^3$/yr of natural gas.[6] Data are not available to quantify the amount of heat recovered at this plant.

7.3 REFERENCES

1. Nitric Acid Plant Inspection Guide. U. S. Environmental Protection Agency. Research Triangle Park, N.C. Publication No. EPA-340/1-84-013. August 1984. pp. 25-55.

2. Review of New Source Performance Standards for Nitric Acid Plants. U. S. Environmental Protection Agency. Research Triangle Park, N.C. Publication No. EPA-450/8-84-011. April 1984. Ch. 6.

3. Iskandar, R.S. NO_X Removal by Selective Catalytic Reduction, "SCR." Cormetech, Inc. California Clean Air and New Technologies Conference. October 15-17, 1990. 12 pp.

4. Telecon. Shoraka, S., MRI, with Durila, M., Engelhard. July 12, 1991. Discussion of SCR materials used in nitric acid manufacturing plants.

5. Ohsol, E.O. Nitric Acid. In: Encyclopedia of Chemical Processing and Design, J. J. McKetta and W. A. Cunningham (eds.). New York, Marcel Dekker, Inc. 1990. pp. 150-155.

6. Letter from Plant B to Neuffer, B., U. S. Environmental Protection Agency, ISB. June 18, 1991. NO_x control at adipic acid manufacturing Plant B.

7. Telecon. Neuffer, B., EPA/ISB, with Plant C. April 10, 1991. NO_x control at adipic acid manufacturing Plant C.