EPA-450/3-83-008

Guideline Series

Control of Volatile Organic Compound Emissions from Manufacture of High-Density Polyethylene, Polypropylene, and Polystyrene Resins

Emission Standards and Engineering Division

U.S. ENVIRONMENTAL PROTECTION AGENCY
Office of Air, Noise, and Radiation
Office of Air Quality Planning and Standards
Research Triangle Park, North Carolina 27711

November 1983

GUIDELINE SERIES

The guideline series of reports is issued by the Office of Air Quality Planning and Standards (OAQPS) to provide information to state and local air pollution control agencies; for example, to provide guidance on the acquisition and processing of air quality data and on the planning and analysis requisite for the maintenance of air quality. Reports published in this series will be available - as supplies permit - from the Library Services Office (MD-35), U.S. Environmental Protection Agency, Research Triangle Park, North Carolina 27711, or for a nominal fee, from the National Technical Information Service, 5285 Port Royal Road, Springfield, Virginia 22161.

TABLE OF CONTENTS

LIST OF TABLES

LIST OF FIGURES

1.0 INTRODUCTION

The Clean Air Act Amendments of 1977 require each State in which there are areas in which the national ambient air quality standards (NAAQS) are exceeded to adopt and submit revised State implementation plans (SIP's) to EPA. Revised SIP's were required to be submitted to EPA by January 1, 1979. States which were unable to demonstrate attainment with the NAAQS for ozone by the statutory deadline of December 31, 1982, could request extensions for attainment with the standard. States granted such an extension are required to submit a further revised SIP by July 1, 1982.

Section 172(a)(2) and (b)(3) of the Clean Air Act require that nonattainment area SIP's include reasonably available control technology (RACT) requirements for stationary sources. As explained in the "General Preamble for Proposed Rulemaking on Approval of State Implementation Plan Revisions for Nonattainment Areas," (44 FR 20372, April 4, 1979) for ozone SIP's, EPA permitted States to defer the adoption of RACT regulations on a category of stationary sources of volatile organic compounds (VOC) until after EPA published a control techniques guideline (CTG) for that VOC source category. See also 44 FR 53761 (September 17, 1979). This delay allowed the States to make more technically sound decisions regarding the application of RACT.

Although CTG documents review existing information and data concerning the technology and cost of various control techniques to reduce emissions, they are, of necessity, general in nature and do not fully account for variations within a stationary source category. Consequently, the purpose of CTG documents is to provide State and local air pollution control agencies with an initial information base for proceeding with their own assessment of RACT for specific stationary sources.

2.0 PROCESS AND POLLUTANT EMISSIONS

2.1 INTRODUCTION

The polymers and resins industry includes operations that convert monomer or chemical intermediate materials obtained from the basic petrochemical industry and the synthetic organic chemicals manufacturing industry into polymer products. Such products include plastic materials, synthetic resins, synthetic rubbers, and organic fibers covered by Standard Industrial Classification (SIC) codes 2821, 2822, 2823, and 2824. The 1979 production of the major industry polymers was 16,052 Gg.

Thirty-six percent of this total production of the industry is from the manufacture of high-density polyethylene, polypropylene, and polystyrene. In addition, the manufacture of these three polymers is estimated to account for 56 percent of the total estimated industry process emissions of 86.2 Gg/yr of volatile organic compounds (VOC).

This chapter describes the manufacturing processes for each of these three polymers under consideration and the associated process VOC emissions. In general, the manufacture of these polymers may be considered as a five step operation: (1) raw materials storage and preparation, (2) polymerization reaction, (3) material recovery, (4) product finishing, and (5) product storage. The equipment used in each process step may have associated process emissions. The relationship between process section (that is, the group of equipment used in the performance of one of the five basic process steps) and process emissions is shown in the tables identifying vent stream characteristics for each polymer type.

Fabrication, blending, or formation of resin materials are not included in the process descriptions, nor are emissions from these operations quantified. Fugitive and storage emissions from these processes are described in other CTG documents, "Control of Volatile Organic Fugitive Emissions from Synthetic Organic Chemical and Polymers

and Resins Manufacturing Equipment" and "Control of Volatile Organic Emissions from Volatile Organic Liquid Storage in Floating and Fixed Roof Tanks" and hence, they are not discussed here.

The model plants in this chapter represent most of existing processes in the ozone nonattainment areas for each particular resin. The uncontrolled emission factors can be used as a basis for the verification of VOC emissions developed from emission source tests, plant site visits, permit applications, etc. These emission factors should not be applied in cases where site-specific data are available, but rather, in instances where specific plant information is lacking or highly suspect. States may choose to analyze, or EPA may subsequently analyze, other processes not represented by the model plants, such as the relatively new gas phase processes of polypropylene and polyethylene or the less common liquid phase solution process of high-density polyethylene production.

2.2 POLYPROPYLENE

2.2.1 General Industry Description

Manufacture of polypropylene, on a commercial scale, started in the 1950's when stereospecific catalysts were discovered. Polypropylene is a high-molecular weight thermoplastic crystalline polymer of propylene. The general formula for polypropylene is as follows:

$$\cdots CH_2 - \underset{\displaystyle CH_3}{\underset{|}{CH}} - CH_2 - \underset{\displaystyle CH_3}{\underset{|}{CH}} - CH_2 - \underset{\displaystyle CH_3}{\underset{|}{CH}} - \cdots$$

The polymer is lightweight, water- and chemical-resistant, somewhat rigid, and easy to process. It exists in three different forms depending on the geometric arrangement of the methyl groups: (1) isotactic - with all methyl groups aligned on the same side of the chain as shown above, (2) syndiotactic - with the methyl groups alternating, and (3) atactic - all other forms in which the methyl groups are randomly aligned on either side of the chain. Typically, commercial polypropylene consists principally of crystalline material (isotactic), with only a small amount of amorphous material (atactic).[1]

Consumer products from polypropylene can be formed in many ways, including solid molding, extrusion, rotational molding, powder watering, thermoforming, foam molding, and fiber orientation.[2]

Polypropylene resins are supplied in many grades for a variety of uses. Apart from major distinctions between homopolymer, intermediate-impact co-polymer, and high-impact co-polymer, the grades may also differ in specific formulations. Different grades of polypropylene lend themselves to use in different applications. Molded applications include bottles for syrups and foods, caps, auto parts, appliance parts, toys, housewares, and furniture components. Fibers and filaments are used in carpets, rugs, and cordage. Film uses include packaging for cigarettes, records, and housewares. Extrusion products include pipes, profiles, wires and cable coatings, and corrugated packing sheets.[3]

Injection molding accounts for 41 percent of polypropylene use; fibers and filaments account for 31 percent; and other forms account for 28 percent.[3] In terms of end uses, major sectors are shown in Table 2-1.

Production of polypropylene has grown from 981 Gg in 1973 to 1,743 Gg in 1979, a 10.1 percent annual growth rate. C.H. Kline projects a 9.0 percent growth rate for polypropylene from 1978 to 1983,[4] and SRI International projects an 8 percent growth rate from 1977 to 1982.[5] Currently, 24 plants produce polypropylene in the United States.[6] The existing polypropylene plants known to be in the current ozone nonattainment areas are listed in Table 2-2.

2.2.2 Model Plant

The continuous slurry process for manufacture of polypropylene is the most widely used process commercially. Based on data from 10 existing plants located in nonattainment areas, a model plant capacity of 141 Gg/yr was selected.

The polypropylene resins, characterized by having a controlled content of isotactic material, are obtained through coordination polymerization, employing a heterogeneous Ziegler-Natta type catalyst system, which typically is a combination of titanium tetrachloride and aluminum alkyls. More recent process technology, which uses a high-yield catalyst with improved activity, requires much less catalyst than the conventional process. With this high-yield process, the catalyst is left in the product. This technology results in fewer processing steps and, thus, less emissions. This new process is incorporated in the model plant by exclusion of several processing units, and is consistent with a proportional reduction in the total emission factor.

Table 2-1. END USES OF POLYPROPYLENE

Sector	Weight Percent Polypropylene Use
Consumer/Institutional	19
Furniture/Furnishings	18
Packaging	16
Transportation	12
Electrical/Electronics	7
Other	28

Table 2-2. POLYPROPYLENE (PP) PLANTS IN OZONE NONATTAINMENT AREAS[a]

Company	Location	Status[b]	Capacity (Gg/yr)
ARCO Polymers, Inc.	Deer Park, TX	NAR	181
Amoco Chem. Corp.	Chocolate Bayou, TX	NANR	125
Exxon Chem. Co.	Baytown, TX	NAR	250
Gulf Oil	Cedar Bayou, TX	NAR	181
Hercules, Inc.	Baytown, TX Lake Charles, LA	NAR NANR	272 376
Northern Petrochem. Co.	Morris, IL	NANR	91
USS Novamont Corp.	La Porte, TX	NAR	159
Phillips Petro. Co.	Pasadena, TX	NAR	82
Rexene Polyolefins Co.	Odessa, TX Bayport, TX	NANR NAR	23-46 -
Shell Chem. Co.	Norco, LA Woodbury, NJ	NANR NAR	136 136
Soltex Polymer Corp.	Deer Park, TX	NAR	91

[a]This list is illustrative only. Since the nonattainment status of areas changes from time to time, this is not intended to be a definitive list of plants that will be affected by this guideline document.

[b]Ozone nonattainment area not requesting extension (NANR).
Ozone nonattainment area requesting extension (NAR).

SOURCES: SRI International, 1980 Directory of Chemical Producers, United States.

U.S. EPA study by Pullman-Kellogg Co., plant listing.

The BNA Environmental Reporter AQCR Listing. §121 (through March 12, 1981).

2.2.2.1 Process Description. The continuous slurry processes, conventional and high-yield, are represented in Figure 2-1. Reactor feed materials consist mainly of monomer propylene, comonomer ethylene, monomer impurities propane and ethane, hexane, and a stereospecific catalyst. Hexane is used as a process diluent and acts as a heat transfer agent and polymer suspending medium. The catalyst is usually manufactured on site to consistently maintain the required catalyst activity. It is mixed with necessary solvents and metered accurately into the polymerization reactor along with other reactants. Process diluent is also used in catalyst preparation and spent diluent is sent to the diluent recovery section for reuse.

The reactor is a continuously stirred jacketed vessel or a loop reactor. During reaction, a portion of the polymer/monomer/diluent mixture is continuously drawn from the reactor to a flash tank in which the unreacted propylene and propane are separated, and recovered by condensation.

Slurry from the flash tank is then fed to the deactivation/decanting section for washing with an alcohol-water solution to remove most of the catalyst residues. The diluent/crude product slurry is lighter than the alcohol-water solution and the two phases are separated by decantation. The alcohol-water phase is distilled to recover alcohol; whereas, the diluent/crude product phase which is in the form of a slurry is stripped to remove part of the diluent. The product slurry is then sent to a slurry vacuum filter system in which isotactic polymer product solids are separated from the diluent. The atactic polymer remains dissolved in the diluent. The isotactic product goes through a product dryer, then is extruded, pelletized, and sent to product storage.

In the methanol recovery section, the crude methanol streams are refined and recycled, and the bottom streams, containing catalysts metals are sent to the plant waste-water treatment facility.

The atactic-diluent solution is fed to the by-product (atactic) and diluent separation unit in which the diluent is purified and dried for recycle, and the atactic solids are recovered or burned in incinerators.

In the high-yield slurry process, the catalyst is left in the product so deactivation/decanting and alcohol recovery sections are unnecessary. Along with this, one of the major emission streams is also

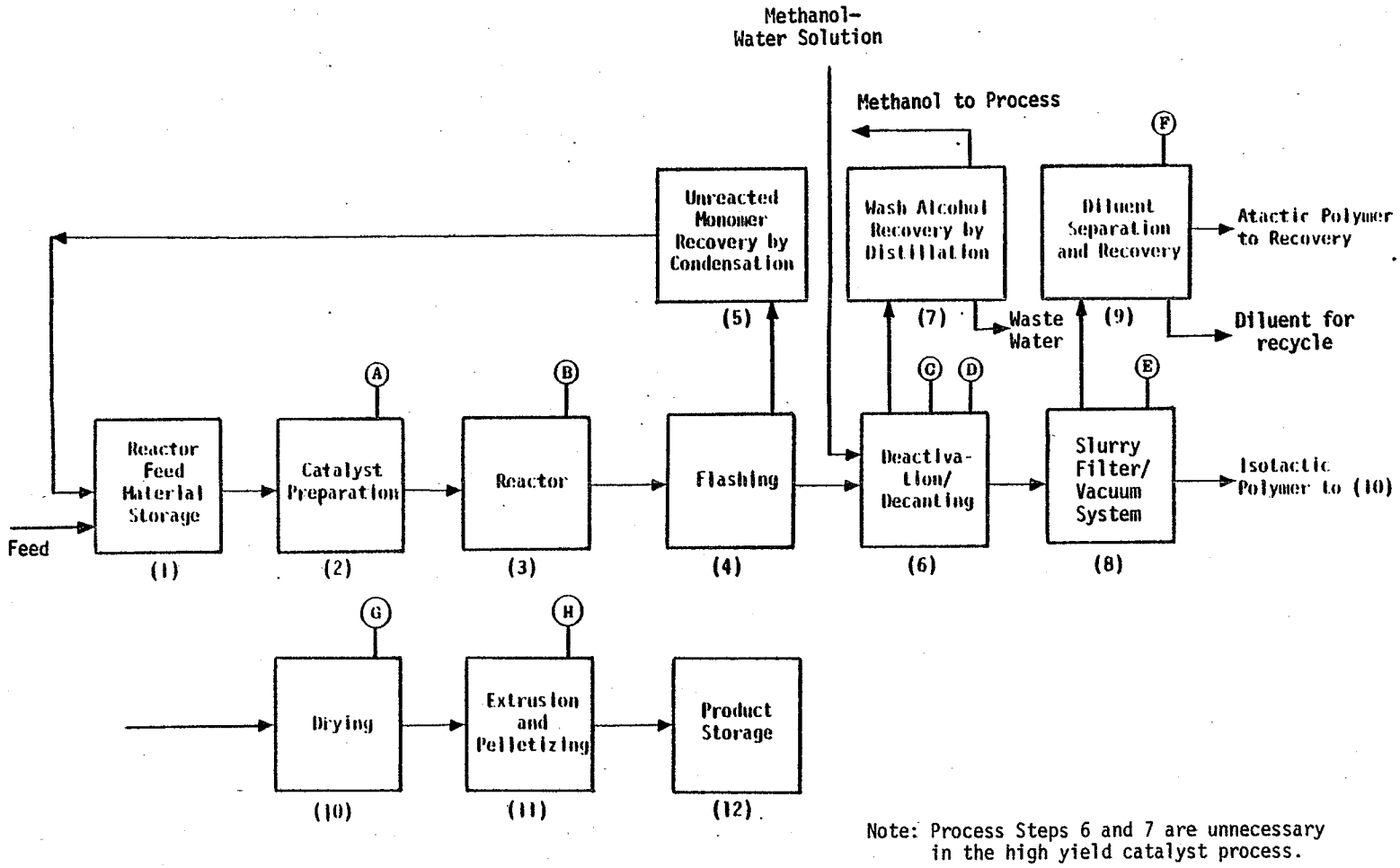

Note: Process Steps 6 and 7 are unnecessary in the high yield catalyst process.

Figure 2-1. Simplified Process Block Diagram for the Polypropylene Continuous, Liquid Phase Slurry Process

eliminated. Figure 2-1 indicates the units that should be excluded in this process.

In addition to the use of high-yield catalysts, other process variations may occur. Mixtures of aliphatic hydrocarbons may replace hexane as the process diluent, and isopropyl alcohol may replace methanol as the catalyst deactivation agent. Also polymer dryers may vary with the facility, but a fluid bed dryer with hot nitrogen or air is the most common. Nitrogen drying has safety advantages and the nitrogen can be recycled resulting in lower costs and emissions. Other types of product dryers and different operating pressures may result in a much higher VOC emission rate. Except for high-yield catalyst, and the product dryer type and operating pressure, these other process variations are minor and should have little effect on the process VOC emissions.

2.2.2.2 VOC Sources. The offgas stream characteristics for polypropylene manufacturer are shown in Table 2-3. The combined process VOC emission factor for the conventional slurry process is 36.7 kg VOC/1,000 kg product. For the high-yield slurry process, Streams C and D are not present; therefore, the combined process VOC emission factor for this process is about 23.4 kg VOC/1,000 kg product. Most of the emission streams are continuous and consist mainly of propylene, ethylene, propane, and a small amount of process diluent. Properties of these compounds are summarized in Table 2-4. The temperature of the streams varies from ambient to 1040C, and the pressure is about atmospheric. Each of the major VOC-containing streams are indicated on Figure 2-1 and are described below:

1. Stream A: Catalyst Preparation Vents - This vent continuously releases process diluent that is used in preparation of the catalyst.

2. Stream B: Combined Polymerization Reactor Vents - These emissions are from vents of reactors from all process trains. This is a continuous stream venting organic process offgas, consisting mainly of C_3 (propylene monomer and other hydrocarbons with three carbon atoms such as propane) and process diluent, which could be hexane or a mixture of aliphatic hydrocarbons with 10-12 carbon atoms.

3. Streams C & D: Decanter and Neutralizer Vents - These vents are part of the alcohol recovery section. This is usually the largest VOC source in the process and consists of methanol or isopropyl alcohol,

Table 2-3. CHARACTERISTICS OF VENT STREAMS FROM THE POLYPROPYLENE CONTINUOUS LIQUID PHASE SLURRY PROCESS[a]

Process Section[b]	Stream[c]	Name	Nature	Emission rate, kg VOC/Mg product	Temperature, °C	Pressure, psig	Composition[d,e]
RMP	A	Catalyst preparation	Continuous	0.07	29	0	$C_{10}HC$, IPA
PR	B	Reactor vents	Continuous	4.07	54	0	C_3HC, $C_{10}HC$
MR	C	Decanter vents	Continuous	11.49	38	0	C_3HC, $C_{10}HC$, IPA
MR	D	Neutralizer vents	Continuous	1.82	32-71	0	C_3HC, C_4HC, $C_{10}HC$, IPA
MR	E	Slurry vacuum/filter system vent	Continuous	7.93	32	0	$C_{10}HC$, IPA
MR	F	Diluent separation and recovery	Continuous	8.72	104	0	$C_{10}HC$, IPA
PF	G	Dryer vents	Continuous	0 to 0.6[f]	85-104	0	Air and small amount of VOC
PF	H	Extrusion/pelletizing vent	Continuous	2.0			25% HC
		Total Emission Rate		36.79			

[a]Source of information: Industry correspondence.

[b]RMP= raw materials preparation; PR = polymerization reaction; MR = material recovery; PF = product finishing.

[c]See Figure 2-1 for stream identification.

[d]Streams are diluted in 10 to 30 percent nitrogen.

[e]C_3HC - Propylene or any other hydrocarbon compound with three carbon atoms such as propane.

C_4HC - Butylene or any other hydrocarbon compound with four carbon atoms.

$C_{10}HC$ - A mixture of aliphatic hydrocarbons with 10-12 carbon atoms.

IPA - Isopropyl alcohol.

[f]The range reflects the fluidized bed dryer emission at different operating pressures. Other types of dryers may have even higher emissions.

[g]Including upper end to the range of emissions from dryer vents.

Table 2-4. COMPONENTS OF POLYPROPYLENE VENT STREAMS

Propylene (monomer)	MW = 42.06, 2186 Btu/cu ft
Propane (monomer impurity)	MW = 44.09, 2385 Btu/cu ft
n-Hexane (diluent)	MW = 86.17, 4412 Btu/cu ft
Methanol or Isopropanol (washing alcohol)	MW = 32.04 or 60.02
Ethylene (comonomer)	MW = 28.05, 1513 Btu/cu ft
C_2-C_5 Hydrocarbons (might include ethylene, propylene, and propane)	MW = 50 (Avg)
C_{10} H.C. (A mixture of aliphatic hydrocarbons with 10-12 carbon atoms.)	MW = 144.0
<u>All of these compounds are usually diluted in gases like:</u>	
Air	MW = 29.0
Nitrogen	MW = 28.0
Hydrogen	MW = 2.0, 275 Btu/cu ft

in addition to C_3 and process diluent. The stream is continuous and exists in most of the existing polypropylene plants. The process using a high-yield catalyst does not require these vents, and the reduction in total emission factor is significant.

4. Stream E: Slurry Vacuum Filter System Vents - This stream is from the system which separates the atactic and isotactic polymer. It is one of the largest VOC emission streams venting process diluent and alcohol remaining in the polymer. It is a continuous stream at atmospheric pressure and exists in both the conventional and high-yield slurry process plants.

5. Stream F: Diluent Separation and Recovery - This stream originates from the by-product and diluent recovery section and can be the second largest VOC emission stream in the entire process. The diluent recovery section which consists of an evaporator, an extractor and distillation units is part of all processes and emits process diluents and alcohol vapors.

6. Stream G: Dryer Vents - This vent emits hydrocarbons diluted in air or nitrogen at a relatively high temperature (104°C) and atmospheric pressure. The emissions consists of vapor of hexane, methanol, and propane.

7. Stream H: Extrusion/Pelletizing Vent - This vent can continuously emit significant quantities of hydrocarbon that may remain in the polypropylene powder as it exits the dryer and enters the extruder feed chute. At this point, the powder is in equilibrium with a vapor that can contain up to 25 percent hydrocarbon by weight. As a result of heating and compression in the extruder, there is some VOC loss through the extruder/pelletizing section and futher losses from the powder/pellet transfer system downstream from the product dryer since the transfer medium acts as a stripping gas.

The stream properties and VOC concentrations of Streams A to H can vary depending on process conditions. The variation generally depends on the product grade or type being manufactured and other variables such as temperature, pressure, catalyst concentration or activity, and the amount of hydrogen used for molecular weight control. The concentration and the magnitude of each stream is, of course, hightest under start-up or shutdown conditions because of process conditions away from equilibrium.

2.2.2.3 Control Systems. No controls are routinely applied for VOC control of these continuous sources. The polymerization reactors and the atactic separation units, however, are generally provided with emergency relief valves leading to a flare for safety purposes in the case of upsets. These emergency vents usually pass through knock-out drums to separate entrained liquid and polymer particles before the vapors are piped to the flare. Also, in the production steps, the concentrated atactic polymer stream from the slurry vacuum filter system is piped to a vessel and its liquid content is removed by evaporation. The solid amorphous atactic polypropylene is left behind and is then either burned in incinerators or is packed and sold as a by-product for paper coating and other applications. For some producers, the atactic polymer is incinerated, liquid and gaseous waste streams from the process may also be burned in the same device.

2.3 HIGH-DENSITY POLYETHYLENE

2.3.1 General Industry Description

High-density polyethylene (HDPE) resins are linear thermoplastic polymers of ethylene with densities higher than 0.94 g/cm^3. HDPE resins are typically produced by a low-pressure process in which organic solvents are used; the solid catalyst is in suspension; and the polymer forms a slurry (e.g., the processes originated by Phillips Petroleum Company and Solvay and Cie, SA). Although there are various solvent processes used, the variations do not affect emissions except with respect to the solvent recovery methods used.

HDPE is a highly (>90 percent) crystalline polymer containing less than one side chain per 200 carbon atoms in the main chain. The typical density range is 0.95-0.97 g/cm^3.[7] It is strong, water- and chemical-resistant, and can be easily processed. It is one of the largest volume plastics produced in the U.S. and in the world. It is extruded into film sheets, pipe or profiles, coated, injection molded, blow molded, rotationally molded, foamed, or formed in other ways.[2]

HDPE's primary application is blow molded bottles for bleaches, liquid detergents, milk, and other fluids. Other blow molded forms for which HDPE's are used include automotive gas tanks, drums, and carboys. HDPE's also are used for injection molded forms including material handling pallets, stadium seats, trash cans, and auto parts. Film is

used in making shopping bags. Forty percent of all HDPE is blow molded; another 22 percent is injection molded. Film and sheet combined account for only six percent of HDPE use. Other uses account for 32 percent. End use sectors for HDPE include packaging (45 percent), consumer/institutional (11 percent), building and construction (9 percent), and other sectors (35 percent).[3]

From 1973 to 1979, production of HDPE grew from 1,196 Gg to 2,273 Gg, a growth rate of 11.3 percent. C.H. Kline projects growth at 7.0 percent for 1978 to 1983.[4] SRI International projected growth from 1976 to 1980 at 10 percent.[5]

2.3.2 Model Plant

The Phillips particle form process serves as the basis for this model plant, but it is intended to represent all other liquid phase slurry processes.

This model plan specifically includes an unreacted monomer recycling system. There are other similar liquid-phase processes that do not use such systems and have larger emissions. The plant capacity for the model HDPE plant is 214 Gg/yr. This is based on plants located in nonattainment areas. The existing HDPE plants known to be in the current ozone nonattainment areas are listed in Table 2-5.

2.3.2.1 Process Description. Referring to the schematic for this process, Figure 2-2, the feed section includes catalyst purification and activation. The prepared catalyst is then fed to the reactor continuously by being slurried in a stream of process diluent (pentane or isobutane). Ethylene monomer and comonomer (1-butene or hexene), after purification, are also fed to the reactor where polymerization takes place in process solvent. The reactor, for the particle-form process, is usually a closed loop pipe reactor. The product HDPE is separated from unreacted monomer and diluent by flashing from a low pressure to a vacuum and by steam stripping. The wet polymer solids are dewatered in a centrifuge and then dried in a closed-loop nitrogen or air-fluidized drying system prior to extrusion.

The unreacted monomer and diluent vapors are sent through a diluent recovery unit where most of the diluent is separated and recycled back to the reactor. The rest of the stream is then sent to the ethylene

Table 2-5. HIGH-DENSITY POLYETHYLENE (HDPE) PLANTS IN OZONE NONATTAINMENT AREAS[a]

Company	Location	Status[b]	Capacity (Gg/yr)
Allied Chem. Corp.	Baton Rouge, LA	NANR	272
ARCO Polymers, Inc.	Port Arthur, TX	NANR	147
Cities Service Co.	Texas City, TX	NANR	82
Dow Chemical	Freeport, TX	NANR	136
	Plaquemine, LA	NANR	136
Amoco Chem. Corp.	Chocolate Bayou, TX	NANR	159
E.I. Du Pont de Nemours & Co. Inc.	Orange, TX	NANR	104
	Victoria, TX	NANR	102
Gulf Oil Corp.	Orange, TX	NANR	200
Hercules, Inc.	Lake Charles, LA	NANR	7
Nat'l Petrochem. Corp.	La Porte, TX	NAR	227
Phillips Petro. Co.	Pasadena, TX	NAR	420
Soltex Polymer Corp.	Deer Park, TX	NAR	270
UCC	Port Lavaca, TX	NANR	181

[a]This list is illustrative only. Since the attainment status of areas change from time to time, this is not intended to be a definitive list of plants that will be affected by this guideline document.

[b]Ozone nonattainment area not requesting extension (NANR).
Ozone nonattainment area requesting extension (NAR).

SOURCES: SRI International, 1980 Directory of Chemical Producers, United States.

U.S. EPA study by Pullman-Kellogg Co., plant listing.

The BNA Environmental Reporter AQCR Listing. §121 (through March 12, 1981).

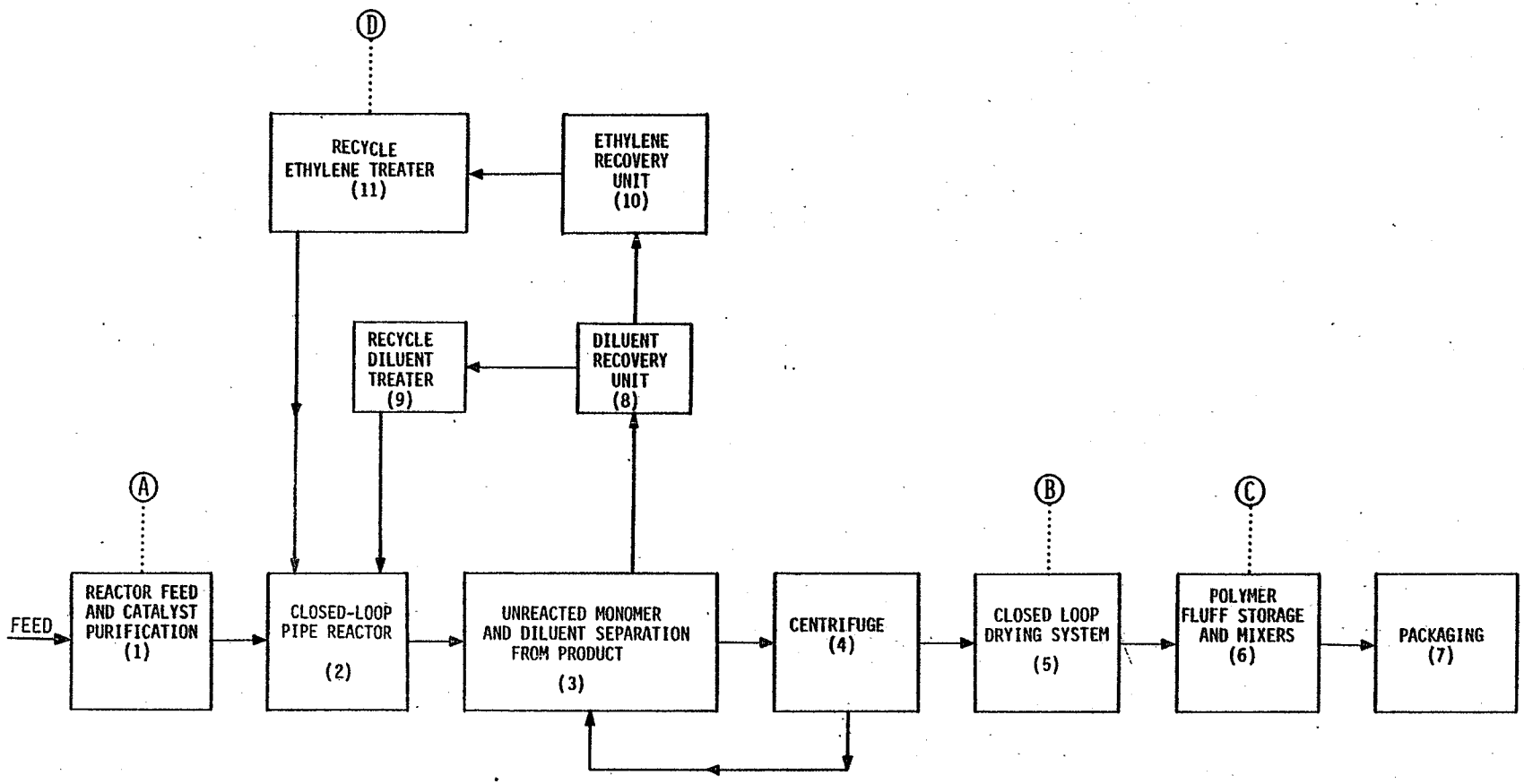

Figure 2-2. Simplified Process Block Diagram for the High Density Polyethylene Liquid Phase Slurry Process

recovery unit where ethylene is recovered and sent to recycle ethylene treaters and back to the reactor.

2.3.2.2 VOC Sources. All the process streams, except the feed preparation stream, in HDPE manufacture are continuous, and they consist mainly of ethylene and process solvent diluted in nitrogen or air. Most of the streams are at ambient temperature. An ethylene safety flare is always a part of each system, and some plants may use it for VOC emission control. Since this particular model plant incorporates ethylene recycle, it has relatively small emissions, but plants which vent unreacted monomer and use air-fluidized dryers have substantially higher VOC emissions. The major VOC source is the flash tank where an unreacted monomer stream (about 50 percent VOC) is released. HDPE manufacturers often send this stream to a boiler to recover the heat content. Table 2-6 shows the vent stream characteristics for the VOC sources: these sources are described below:

1. Stream A: Feed Preparation - This is an intermittent stream consisting mostly of ethylene. Assumed to vent 12 times a year, it's sources are drying, dehydrating and other feed purification operations.

2. Stream B: Dryer - Dryer emissions are continuous and have low VOC concentrations. Closed-loop drying systems have very low emissions of process solvent in nitrogen. Air-fluidized dryers have significantly higher emissions.

3. Stream C: Continuous Mixer - This is another low VOC emission stream coming from a mixer which mixes polymer with anti-oxidants. It is continuous and releases process solvent that is still left in the polymer along with a large quantity of nitrogen. Usually this stream is emitted to the atmosphere.

4. Stream D: Recycle Treaters - This is a semi-continuous VOC emission stream containing about 80 weight percent VOC. Currently this stream is usually flared. Treaters consist of vessels containing such materials as adsorbents, dessicants, and molecular sieves which remove water and other impurities in the recycle ethylene stream. Emissions occur when the vessels are purged during regeneration of the adsorber beds. This stream is considered a continuous stream. The stream flows continuously for about 20 out of 24 hours.

Table 2-6. CHARACTERISTICS OF VENT STREAMS FROM THE HIGH DENSITY POLYETHYLENE LOW-PRESSURE, LIQUID PHASE SLURRY PROCESS[a,b]

Process Section[c]	Stream[d]	Name	Nature	Emission rate, kg VOC/Mg product	Temperature, °C	Composition, Wt.%
RMP	A	Feed preparation	Intermittent[e]	0.2	21	100.0 Ethylene
PF	B	Dryer nitrogen blower	Continuous	0.06-0.4[f]	21	0.3 Isobutane 99.7 Nitrogen
PF	C	Continuous mixer	Continuous	0.006	21	0.6 Isobutane 99.4 Nitrogen
MR	D	Recycle treaters	Continuous	12.7	21	61.0 Ethylene 18.0 Isobutane 20.0 Ethane 1.0 Hydrogen
		Total Emission Rate		13.0-13.3		

[a]Source of information: Industry correspondence.

[b]Gas stream pressure data unknown.

[c]RMP = raw materials preparation; PF= product finishing; MR = material recovery.

[d]See Figure 2-2 for stream identification.

[e]One occurrence per month.

[f]Low end is for recycle nitrogen dryers; high end is for air fluidized bed dryers.

2.3.2.3 Control Systems. As noted, like the other polyolefin processes, the HDPE process generally has a flare as a part of the system for safety reasons. A complete line of safety relief devices leading to the flare are commonly provided to avoid accidents as a result of equipment overpressurization or malfunction.

2.4 POLYSTYRENE

2.4.1 General Industry Description

Polystyrene offers a combination of excellent physical properties and processibility at a relatively low price for thermoplastic materials. It is crystal clear and has colorability, rigidity, good electrical properties, thermal stability, and high-flexural and tensile strengths. Polystyrene products are used in molded forms, extrusions, liquid solutions, adhesives, coatings, and foams. The family of polymerized co-polymers from styrene monomer and its modifications ranked third among all plastics in consumption within the United States.[8]

Molded uses include toys, autoparts, housewares, kitchen items, appliances, wall tiles, refrigerated food containers, radio and television housings, small appliance housing, furniture, packages, and building components such as shutters. Extruded sheets also are used in packaging, appliance, boats, luggage, and disposable plates. Foamed styrene is a good insulator and is used in construction, packaging, boats, housewares, toys, and hot/cold insulated drink cups.[2] Fifty percent of all styrene is molded. Extrusion accounts for 33 percent. Other forms make up 17 percent.

Of end use sectors, packaging makes up 35 percent, consumer/institutional - 22 percent, building and construction - 10 percent, electrical and electronic - 10 percent, and other sectors - 23 percent.[3]

Production of styrene has grown from 1,507 Gg in 1973 to 1,817 Gg in 1978, a 3.2 percent growth rate. C.H. Kline projects a 6.0 percent growth rate for 1978-1983[4] while SRI International projects a 4.9 percent growth rate for 1979-1982.[5]

Styrene polymerizes readily with the addition of either heat or catalyst like benzoyl peroxide or ditertiary butylperbenzoate. Styrene will homopolymerize in the presence of inert materials and co-polymerize with a variety of monomers. Pure polystyrene has the following structure:

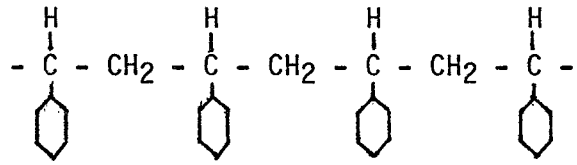

Although polymers with molecular weights in the millions can be made, those most useful for molding have molecular weights of about 125,000; while those used in the surface coating industry average about 35,000.

2.4.2 Model Plant

A continuous process for the manufacture of polystyrene was chosen for developing the model plant primarily because of its significant VOC emissions. Mass (bulk) polymerization was used as a basis for developing the flow diagram. However, the model plant represents all liquid phase continuous processes. In the case of suspension polymerization, because polymerization takes place in water, dewatering, washing, centrifuge and dryer sections are required. These sections usually are not sources of VOC emissions. The model plant capacity is 73.5 Gg/yr. This capacity represents an average of capacities from polystyrene plants using batch or continuous processes in ozone nonattainment areas. The existing polystyrene plants in ozone nonattainment areas are listed in Table 2-7. The list includes both continuous and batch-type processes; when the process type is unknown the process comment is left blank. The plants with unknown process type are included for completeness of the list. Only the continuous processes are covered by RACT.

2.4.2.1 Process Description. This description is for a fully continuous, thermal co-polymerization process for the manufacture of pelletized polystyrene resin from styrene monomer and polybutadiene. Several grades of crystal and impact polystyrene are produced by this process. The continuous process is represented in Figure 2-3.

Styrene, polybutadiene, mineral oil, and small amounts of recycle polystyrene, anti-oxidants and other additives are introduced into the feed dissolver tank in proportions that vary according to the grade of resin being produced. Blended feed is pumped on a continuous basis to the reactor where the feed is thermally polymerized to polystyrene. The polymer melt, containing some unreacted styrene monomer and by-products

Table 2-7. POLYSTYRENE (PS) PLANTS IN OZONE NONATTAINMENT AREAS[a]

Company	Location	Status[b]	Capacity (Gg/yr)	Process Comment[c]
A.E. Plastik Pak Co., Inc.	City of Industry, CA	NAR	16	-
Am. Hoechst Corp.	Cheasapeake, VA	NANR	91	-
	Leominster, MA	NANR	54	-
Amoco Chemical Corp.	Joliet, IL	NANR	136	Continuous
	Torrance, CA	NAR	16	Batch
	Willow Springs, IL	NAR	41	Batch
ARCO Polymers, Inc.	Monaca, PA	NAR	238	-
BASF Wyandotte Corp.	Jamesburg, NJ	NAR	136	Batch
	South Brunswick, NJ	NAR	50	Batch
Carl Gordon, Ind., Inc.	Owensboro, KY	NAR		Batch
	Oxford, MA	NAR	68	-
	Worchester, MA	NAR		-
Cosden Oil & Chemical Co.	Windsor, NJ	NAR	54	-
	Calumet City, IL	NAR	120	Continuous
Crest Container Corp.	Saginaw, TX	NANR	14	Batch
	Fort Worth, TX	NANR	3.6	-
Dart Ind., Inc.	Bayport, TX	NANR	68	-
Dow Chemical Corp.	Allyns Pt., CT	NAR	82	-
	Midland, MI	NANR	100	Continuous
	Torrance, CA	NAR	91	Continuous
Gulf Oil Chemical Co.	Marietta, OH	NANR	102	Continuous
	Channelview, TX	NAR	18	-
Mobil Chemical Co.	Holyoke, MA	NAR	45	-
	Joilet, IL	NANR	20	-
	Santa Ana, CA	NANR	34	Continuous
Monsanto	Addyston, OH	NAR	136	Continuous
	Decatur, AL	NANR	45	Continuous
	Long Beach, CA	NAR	23	-
	Springfield, MA	NAR	136	Continuous
Polysar Resins, Inc.	Copley, OH	NANR	82	Continuous
	Leominster, MA	NAR	52	-
Richardson Company	Channelview, TX	NANR	-	-
Shell Chemical Co.	Belpre, OH	NANR	141	Continuous
Sterling Plastics Corp.	Windsor, NJ	NAR	13.6-54.4	Continuous

[a]This list is illustrative only. Since the attainment status of areas change from time to time, this is not intended to be a definitive list of plants that will be affected by this guideline document.

[b]Ozone nonattainment area not requesting extension (NANR).
Ozone nonattainment area requesting extension (NAR).

[c]Only continuous processes are covered by RACT.

SOURCES: SRI International, 1980 Directory of Chemical Producers, United States.

U.S. EPA study by Pullman-Kellogg Co., plant listing.

The BNA Environmental Reporter AQCR Listing. §121 (through March 12, 1981).

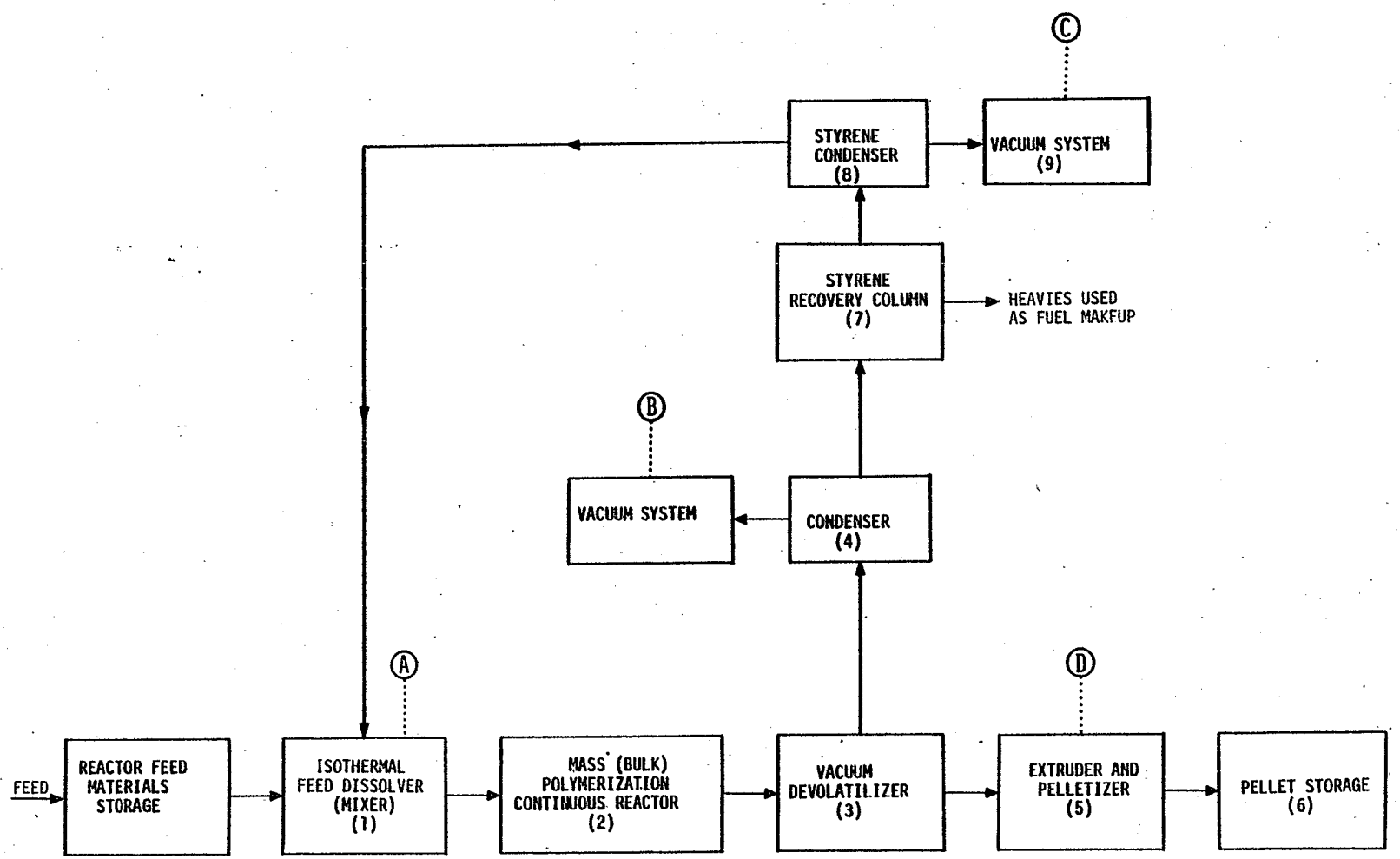

Figure 2-3. Simplified Process Block Diagram for the Polystyrene Continuous Process

is pumped to a vacuum devolatilizer where most of the monomer and by-products are separated, condensed and sent to a styrene recovery unit. Vapors from the styrene condenser are vented through a vacuum system.

Molten polystyrene from the bottom of the devolatilizer is pumped through a stranding die-plate into a cold water bath. The cooled strands are pelletized and sent to product storage.

In the styrene recovery unit, crude styrene monomer is separated in a distillation column. The styrene vapor overhead from the tower is condensed and recycled to the feed dissolver tank. Noncondensibles are vented through a vacuum system. Heavies from the bottom of the column can be used as a fuel supplement.

2.4.2.2 VOC Sources. Table 2-8 shows the vent stream characteristics for the continuous polystyrene process. All VOC emission streams from the process are continuous. Industry's experience with continuous polystyrene plants indicate a wide range of emission rates from plant to plant. Steam present in Streams B and C reflects the use of a steam jet ejector in the vacuum system used; air reflects the use of vacuum pumps.

1. Stream A: Feed Dissolver - This vent emits mostly styrene. The VOC emission results from washing losses. Currently, the styrene is emitted to the atmosphere.

2. Stream B: Styrene Condenser Vent - Consists of unreacted styrene separated from the polystyrene in a vacuum devolatilizer. The stream can be exhausted through a vacuum system (e.g., steam jet ejector) to atmosphere. This is the largest VOC source. When vacuum pumps are used and followed by refrigerated brine condenser, the emissions can be lower.

3. Stream C: Styrene Recovery Unit Condenser Vent - This stream contains the noncondensible components separated in the styrene recovery tower and is vented through a steam jet ejector or vacuum pump.

4. Stream D: Extruder Quench Vent - This stream consists of steam and a trace of styrene vapor. The stream is usually vented through a forced-draft hood and passed through demister-pad or electrostatic precipitator before venting to the atmosphere.

2.4.2.3 Control Systems. No routine control is applied to continuous processes other than normal condensation operations. One unique system,

Table 2-8. CHARACTERISTICS OF VENT STREAMS FROM THE POLYSTYRENE CONTINUOUS PROCESS[a]

Process Section[b]	Stream[c]	Name	Nature	Emission rate, kg VOC/Mg product	Temperature, °C	Pressure, psig	Composition, Wt.%
RMP	A	Feed Dissolver	Continuous	0.009	-	-	92 Styrene 7.5 Polybutadiene 1.5 Other
MR	B	Devolatilizer condenser vent	Continuous	0.05-2.96	100	0	21.8 Styrene 78.2 Steam
MR	C	Styrene recovery unit condenser vent	Continuous	0.05-0.13	100	0	2.1 Styrene 97.9 Steam
PF	D	Extruder quench vent	Continuous	0.15	21	-	99.99 Steam Trace Styrene
		Total Emission Rate		0.26-3.25			

[a]Source of Information: Industry correspondence.

[b]RMP = raw material preparation; MR = material recovery; PF = product finishing.

[c]See Figure 2-3 for stream identification.

however, of vapor condensing/recovery is used where each process vessel is equipped with rupture discs having the respective pressure relief settings. When any of these process vessels are overpressured, the vapors relieve to the vapor condensing/recovery system. By flashing action and by condensation, most of the vapors are condensed, recovered, and reused in the process. This system also results in a single emission point in the entire process. Unlike the polyolefins processes, no flares are used as control devices.

2.5 REFERENCE FOR CHAPTER 2

1. Letter from Matey, J.S., Chemical Manufacturers Association, to Vincent, E.J., EPA. October 19, 1981. p. 2. CMA comments on EPA model plant emission factors for polymers/resins manufacture.

2. Kline, C.H. and Company. The Kline Guide to the Plastics Industry. Fairfield, New Jersey. 1978.

3. SRI International. Facts and Figures of the Plastics Industry. New York, New York. 1978.

4. Kline, C.H. and Company. Plastics and Resins: Forecast to 1983. Chemical and Engineering News reprint. 1979.

5. SRI International. Chemical Economics Handbook.

6. Click, C.N. and D.K. Webber, Polymer Industry Ranking by VOC Emissions Reduction that Would Occur from New Source Performance Standards. Pullman-Kellogg Company, EPA Contract No. 68-02-2619. 1979. p. 177-178.

7. Billmeyers, F.W. Textbook of Polymer Science. New York, Wiley Interscience, 1971. p. 379-386.

8. SRI International. The Story of the Plastics Industry. 1977.

3.0 EMISSION CONTROL TECHNIQUES

Volatile organic compounds (VOC), used as solvents and key raw materials in the manufacture of polymers and resins, are emitted to the atmosphere from a variety of process equipment. Process VOC emissions can be reduced either by installing emission control devices or by reducing the VOC in the vent streams by a process modification such as recovery of monomer or solvent. This chapter describes emission control techniques that may be used to reduce process emissions from the polymers and resins industry.

Process emissions from the manufacture of polymers and resins are diverse in both composition and flow. Streams contain a wide range of VOC concentrations, i.e., less than 1 percent to essentially 100 percent, but most are of high concentration. Some streams are continuous, while others are intermittent. Process emissions also differ in temperature, pressure, heating value, and miscibility. These factors are extremely important in the selection and design of VOC emission control equipment.

Due to this diversity, different control techniques may be appropriate for different vent streams. The control techniques may be characterized by two broad categories: combustion techniques and recovery techniques. Combustion techniques such as flares and incinerators are applicable to a variety of VOC streams. Recovery techniques such as condensation, absorption, and adsorption, are effective for some select vent streams. Economic incentives may encourage the use of either type of VOC control, since certain combustion configurations may permit heat recovery, and recovery techniques permit the conservation and reuse of valuable materials. The selection of a control system for a particular application is based primarily on considerations of technical feasibility and process economics.

The most common control techniques form the basis for this chapter. Basic design considerations for flares, thermal and catalytic incinerators,

industrial boilers, condensers, absorbers, and adsorbers, are briefly described. The conditions affecting the VOC removal efficiency of each type of device and its applicability for use in the polymers and resins industry are examined. Emphasis has been given to flares, thermal incinerators, and condensers because of their wide applicability to a variety of VOC streams. Combustion techniques are discussed in Section 3.1 and recovery techniques in Section 3.2.

3.1 CONTROL BY COMBUSTION TECHNIQUES

The four major combustion devices that are or can be used to control VOC emissions from the polymers and resins industry are: flares, thermal or catalytic incinerators, and boilers. Flares are the most widely used control devices at polyethylene and polypropylene manufacturing plants. Incinerators and boilers are also used, to a lesser extent, to control continuous vent streams. Although these control devices are founded upon basic combustion principles, their operating characteristics are very different. While flares can handle both continuous and intermittent streams, neither boilers nor incinerators can effectively handle large volume intermittent streams. This section discusses the general principles of combustion, and then the design and operation, VOC destruction efficiency, and applicability of these four combustion devices at polymers and resins manufacturing plants.

Combustion is a rapid oxidation process, exothermic in nature, which results in the destruction of VOC by converting it to carbon dioxide and water. Poor or incomplete combustion results in the production of other organic compounds including carbon monoxide. The chemical reaction sequence which takes place in the destruction of VOC by combustion is a complicated process. It involves a series of reactions that produce free radicals, partial oxidation products, and final combustion products. Several intermediate products may be created before the oxidation process is completed. However, most of the intermediate products have a very short life and, for engineering purposes, complete destruction of the VOC is the principal concern.[1]

Destruction efficiency is a function of temperature, turbulence, and residence time. Chemicals vary in the magnitudes of these parameters

that they require for complete combustion. An effective combustion technique must provide:[2]

1. Intimate mixing of combustible material (VOC) and the oxidizer (air),

2. Sufficient temperature to ignite the VOC/air mixture and complete its combustion,

3. Required residence time for combustion to be completed, and

4. Admission of sufficient air (more than the stoichiometric amount) to oxidize the VOC completely.

3.1.1 Flares

Flaring is an open combustion process in which the oxygen required for combustion is provided by the air around the flame. Good combustion in a flare is governed by flame temperature, residence time of components in the combustion zone, turbulent mixing of components to complete the oxidation reaction, and oxygen for free radical formation.

There are two types of flares: ground level flares and elevated flares. Kalcevic (1980) presents a detailed discussion of different types of flares, flare design and operating considerations, and a method for estimating capital and operating costs for flares.[3] Elevated flares are most common in the polymers and resins industry. The basic elements of an elevated flare system are shown in Figures 3-1 and 3-2. Process offgases are sent to the flare through the collection header. The offgases entering the header can vary widely in volumetric flowrate, moisture content, VOC concentration, and heat value. The knock-out drum removes water or hydrocarbon droplets that could create problems in the flare combustion zone. Offgases are usually passed through a water seal before going to the flare. This prevents a possible flame flashback, which can be caused when the offgas flow to the flare is too low and the flame front moves down into the stack.

Purge gas (N_2, CO_2, or natural gas) also helps to prevent flashback in the flare stack caused by low offgas flow. The total volumetric flow to the flame must be carefully controlled to prevent low flow flashback problems and to avoid a detached flame (a space between the stack and flame with incomplete combustion) caused by an excessively high flowrate. A gas barrier or a stack seal is sometimes used just below the flare head to impede the flow of air into the flare gas network.

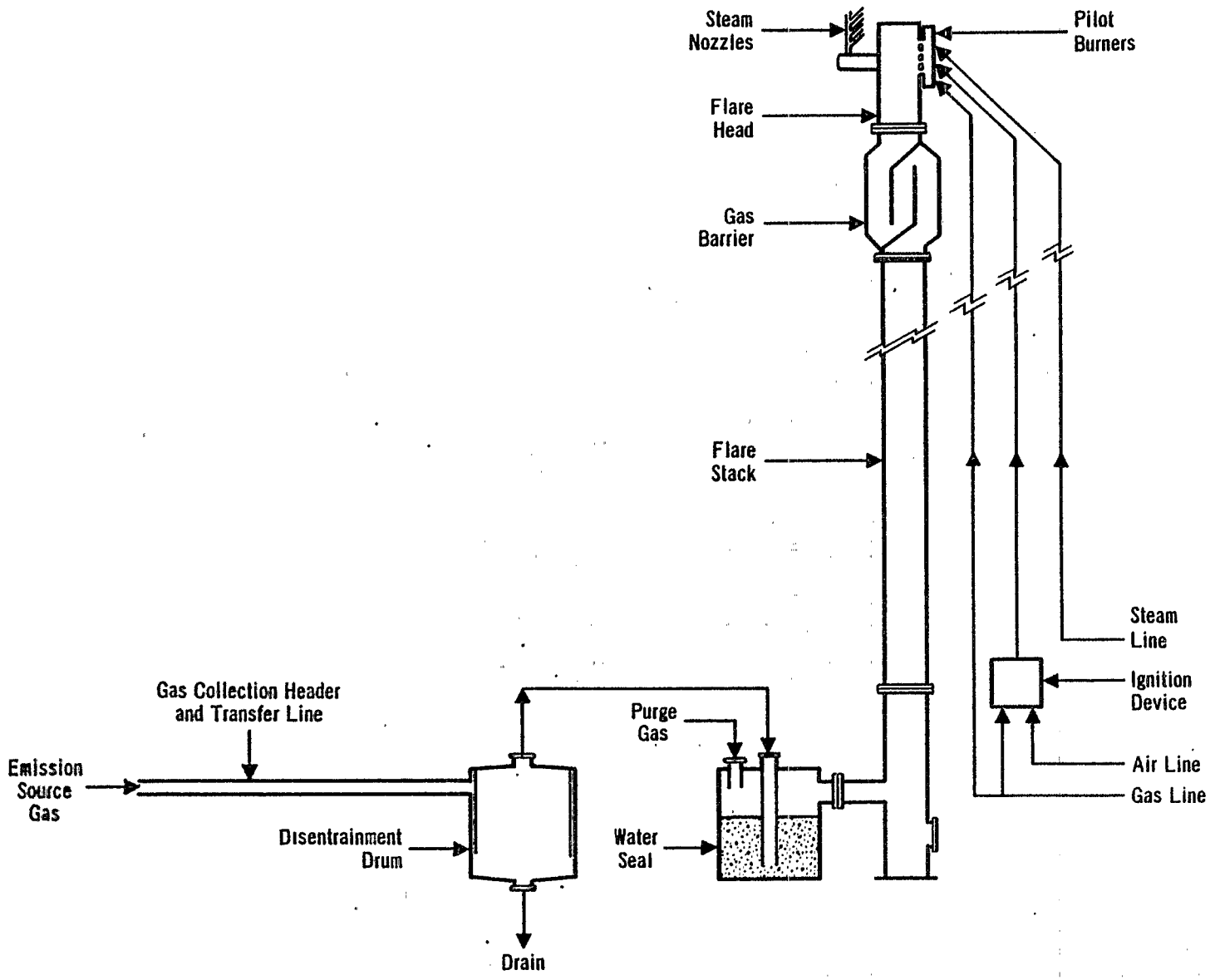

Figure 3-1. Steam Assisted Elevated Flare System

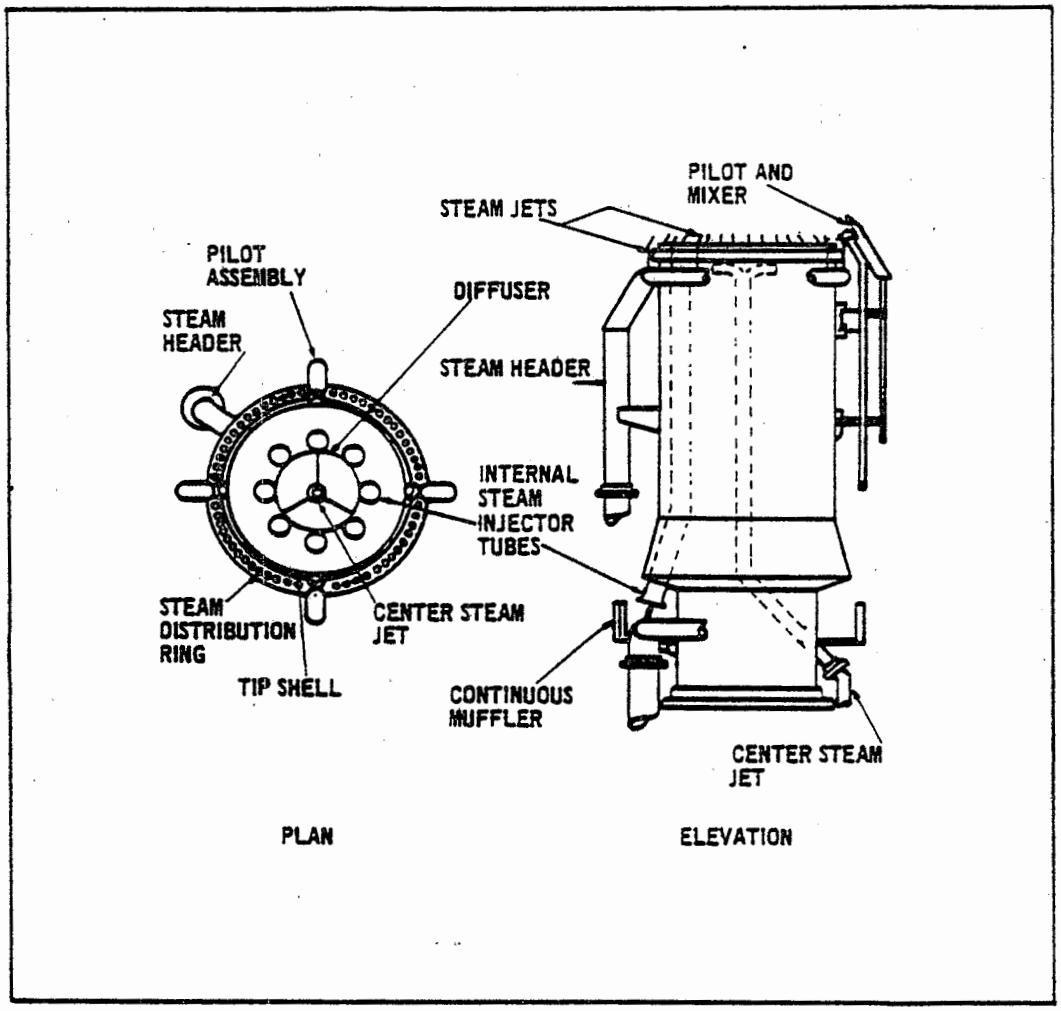

Figure 3-2. Steam Injection Flare Tip

The VOC stream enters at the base of the flame where it is heated by already burning fuel and pilot burners at the flare tip. Fuel flows into the combustion zone where the exterior of the microscopic gas pockets is oxidized. The rate of reaction is limited by the mixing of the fuel and oxygen from the air. If the gas pocket has sufficient oxygen and residence time in the flame zone it can be completely burned. A diffusion flame receives its combustion oxygen by diffusion of air into the flame from the surrounding atmosphere. The high volume of fuel flow in a flare requires more combustion air at a faster rate than simple gas diffusion can supply, so flare designers add steam injection nozzles to increase gas turbulence in the flame boundary zones, drawing in more combustion air and improving combustion efficiency. The steam injection promotes smokeless flare operation by minimizing the cracking reactions that form carbon. Significant disadvantages of steam usage are the increased noise and cost. The steam requirement depends on the composition of the gas flared, the steam velocity from the injection nozzle, and the tip diameter. Although some gases can be flared smokelessly without any steam, typically 0.15 to 0.5 kg of steam per kg of hydrocarbon in the flare gas is required.

Steam injection is usually controlled manually with the operator observing the flare (either directly or on a television monitor) and adding steam as required to maintain smokeless operation. Several flare manufacturers offer devices which sense flare flame characteristics and adjust the steam flowrate automatically to maintain smokeless operation.

Some elevated flares use forced air instead of steam to provide the combustion air and mixing required for smokeless operation. These flares consist of two coaxial flow channels. The combustible gases flow in the center channel and the combustion air (provided by a fan in the bottom of the flare stack) flows in the annulus. The principal advantage of air assisted flares is that expensive steam is not required. Air assist is rarely used on large flares because air flow is difficult to control when the gas flow is intermittent. About 600 J/sec (0.8 hp) of blower capacity is required for each 45 kg/hr (100 lb/hr) of gas flared (Klett and Galeski, 1976).[4]

Ground flares are usually enclosed and have multiple burner heads that are staged to operate based on the quantity of gas released to the flare. The energy of the gas itself (because of the high nozzle pressure drop) is usually adequate to provide the mixing necessary for smokeless operation and air or steam assist is not required. The fence or other enclosure reduces noise and light from the flare and provides some wind protection.

Ground flares are less numerous and have less capacity than elevated flares. Typically they are used to burn gas "continuously" while steam assisted elevated flares are used to dispose of large amounts of gas released in emergencies (Payne, 1982).[5]

3.1.1.1 Flare VOC Destruction Efficiency. The flammability limits of the gases flared influence ignition stability and flame extinction (gases must be within their flammability limits to burn). When flammability limits are narrow, the interior of the flame may have insufficient air for the mixture to burn. Outside the flame, so much air may be induced that the flame is extinguished. Fuels with wide limits of flammability are therefore usually easier to burn (for instance, H_2 and acetylene). However, in spite of wide flammability limits, CO is difficult to burn because it has a low heating value and slow combustion kinetics.

The auto-ignition temperature of a fuel affects combustion because gas mixtures must be at high enough temperature and at the proper mixture strength to burn. A gas with a low auto-ignition temperature will ignite and burn more easily than a gas with a high auto-ignition temperature. Hydrogen and acetylene have low auto-ignition temperatures while CO has a high one.

The heating value of the fuel also affects the flame stability, emissions, and structure. A lower heating value fuel produces a cooler flame which does not favor combustion kinetics and also is more easily extinguished. The lower flame temperature will also reduce buoyant forces, which reduces mixing (especially for large flares on the verge of smoking). For these reasons, VOC emissions from flares burning gases with low heat content may be higher than those from flares which burn high heat content gases.

Some fuels, also, have chemical differences (slow combustion kinetics) sufficient to affect the VOC emissions from flares. For instance, CO is difficult to ignite and burn, and so flares burning fuels with large amounts of CO may have greater VOC emissions than flares burning pure VOC.

The density of the gas flared also affects the structure and stability of the flame through the effect on buoyancy and mixing. The velocity in many flares is very low, and, therefore, most of the flame structure is developed through buoyant forces on the burning gas. Lighter gases thus tend to burn better, all else being equal. The density of the fuel also affects the minimum purge gas required to prevent flashback and the design of the burner tip.

Poor mixing at the flare tip or poor flare maintenance can cause smoking (particulate). Fuels with high carbon-to-hydrogen ratios (greater than 0.35) have a greater tendency to smoke and require better mixing if they are to be burned smokelessly.

The following review of flares and operating conditions summarizes five studies of flare combustion efficiency.

Palmer (1972) experimented with a 1/2-inch ID flare head, the tip of which was located 4 feet from the ground.[6] Ethylene was flared at 15 to 76 m/sec (50 to 250 ft/sec) and 0.12-0.62 x 10^6 J/sec (0.4-2.1 x 10^6 Btu/hr) at the exit. Helium was added to the ethylene as a tracer at 1 to 3 volume percent and the effect of steam injection was investigated in some experiments. Four sets of operating conditions were investigated; destruction efficiency was measured as greater than 99.9 percent for three sets and 97.8 percent for the fourth. The author questioned the validity of the 97.8 percent result due to possible sampling and analytical errors. He recommended further sampling and analytical techniques development before conducting further flare evaluations.

Siegel (1980) made the first comprehensive study of a commercial flare system.[7] He studied burning of refinery gas on a commercial flare head manufactured by Flaregas Company. The flare gases used consisted primarily of hydrogen (45.4 to 69.3 percent by volume) and light paraffins (methane to butane). Traces of H_2S were also present in some runs. The

flare was operated with from 130 to 2,900 kilograms of fuel/hr (287 to 6,393 lb/hr), and the maximum heat release rate was approximately 68.9 x 10^6 J/sec (235 x 10^6 Btu/hr). Combustion efficiency and local burnout was determined for a total of 1,298 measurement points. Combustion efficiency was greater than 99 percent for 1,294 points and greater than 98 percent for all points except one, which had a 97 percent efficiency. The author attributed the 97 percent result to excessive steam addition.

Lee and Whipple (1981) studied a bench-scale propane flare.[8] The flare head was 2 inches in diameter with one 13/16-inch center hole surrounded by two rings of 16 1/8-inch holes, and two rings of 16 3/16-inch holes. This configuration had an open area of 57.1 percent. The velocity through the head was approximately 1 m/sec (3 ft/sec) and the heating rate was 0.09 x 10^6 J/sec (0.3 x 10^6 Btu/hr). The effects of steam and crosswind were not investigated in this study. Destruction efficiencies were greater than 99 percent for three of four tests. A 97.8 percent result was obtained in the only test where the probe was located off the centerline of the flame. The author did not believe that this probe location provided a valid gas sample for analysis.

Howes, et al. (1981) studied two commercial flare heads at John Zink's flare test facility.[9] The primary purpose of this test (which was sponsored by the EPA) was to develop a flare testing procedure. The commercial flare heads were an LH air assisted head and an LRGO (Linear Relief Gas Oxidizer) head manufactured by John Zink Company. The LH flare burned 1,045 kg/hr (2,300 lb/hr) of commercial propane. The exit gas velocity based on the pipe diameter was 8.2 m/sec (27 ft/sec) and the firing rate was 12.9 x 10^6 J/sec (44 x 10^6 Btu/hr). The LRGO flare consisted of three burner heads 1 meter (3 feet) apart. The three-burner combination fired 1,909 kg/hr (4,200 lbs/hr) of natural gas. This corresponds to a firing rate of 24.5 x 10^6 J/sec (83.7 x 10^6 Btu/hr). Steam was not used for either flare, but the LH flare head was in some trials assisted by a forced draft fan. In four of five tests, combustion efficiency was determined to be greater than 99 percent when sampling height was sufficient to ensure that the combustion process was complete. One test resulted in combustion efficiency as low as 92.6 percent when the flare was operated under smoking conditions.

An excellent detailed review of the above four studies was done by Payne, et al. in January 1982,[10] and a fifth study [McDaniel, et al. (1982)] determined the influence on flare performance of mixing, heat content, and gas flow velocity.[11] A summary of these studies is given in Table 3-1. Steam assisted and air assisted flares were tested at the John Zink facility using the procedures developed by Howes. The test was sponsored by the Chemical Manufacturers Association (CMA) with the cooperation and support of EPA. All of the tests were with an 80 percent propylene, 20 percent propane mixture diluted as required with nitrogen to give different Btu/scf values. This was the first work which determined flare efficiencies at a variety of "nonideal" conditions where lower efficiencies had been predicted. All previous tests were of flares which burned gases that were very easily combustible and did not tend to soot. This was also the first test that used the sampling and chemical analysis methods developed for the EPA by Howes.

The steam assisted flare was tested with exit flow velocities up to 19 m/sec (62.5 ft/sec), with heat contents of 11 to 81 x 10^6 J/scm (294 to 2,183 Btu/scf) and with steam-to-gas (weight) ratios varying from zero (no steam) to 6.86:1. Flares without assist were tested down to 7.2 x 10^6 J/scm (192 Btu/scf). All of these tests, except for those with very high steam-to-gas ratios, showed combustion efficiencies of over 98 percent. Flares with high steam-to-gas ratios (about 10 times more steam than required for smokeless operation) had lower efficiencies (69 to 82 percent) when combusting 81 x 10^6 J/scm (2,183 Btu/scf) gas.

The air assisted flare was tested with flow velocities up to 66 m/sec (218 ft/sec) and with Btu contents of 3.1 to 81 x 10^6 J/scm (83 to 2,183 Btu/scf). Tests at 10.5 x 10^6 J/scm (282 Btu/scf) and above gave over 98 percent efficiency. Tests at 6.3 x 10^6 J/scm (168 Btu/scf) gave 55 percent efficiency.

After consideration of the results of these five tests, EPA concluded that 98 percent combustion efficiency can be achieved by steam assisted flares when these flares are operated with combustion gas heat contents and exit flow velocities within ranges determined by the tests. Under the tests conducted, steam flares were shown to obtain 98 percent combustion efficiency combusting gases with heat contents over 11.2 x 10^6 J/scm (300 Btu/scf) at velocities of

Table 3-1. FLARE EMISSIONS STUDIES

Investigator	Sponsor	Flare Tip Design	Flared Gas	Throughput (10^6 Btu/hr)	Flare Efficiency (percent)	Reference
Palmer (1972)	E.I. du Pont	0.5" diameter	Ethylene	0.4 - 2.1	97.8	6
Lee & Whipple (1981)	Union Carbide	Discrete Holes in 2" diameter cap	Propane	0.3	96 - 100	8
Siegel (1980)	Ph.D. Dissertation University of Karlsruhe	Commercial Design (27.6" dia. steam)	50% H_2 plus light hydrocarbons	49 - 178	97 - 99	7
Howes et al. (1981)	EPA	Commercial Design (6" dia. air assist)	Propane	44	92.6 - 100	9
		Commercial Design H.P. (3 tips of 4" dia.)	Natural Gas	28 (per tip)	99	
McDaniel et al. (1982)	CMA-EPA	Commercial Design (6"dia. air assist)	Propylene	0.003 - 58	59.6 - 99.9	11
		Commercial Design (4" dia. steam assist)		0.009 - 57	83 - 99.9	

less than 18.3 m/sec (60 ft/sec). Steam flares are not normally operated at the very high steam-to-gas ratios that resulted in low efficiency in some tests because steam is expensive and operators make every effort to keep steam consumption low. Flares with high steam rates are also noisy and may be a neighborhood nuisance. Nonassisted pipe flares were shown to obtain 98 percent efficiency with heat contents over 200 Btu/scf at velocities of less than 18.3 m/sec (60 ft/sec). Air assisted flares were shown to obtain 98 percent efficiency with heat contents over 11.2 x 10^6 J/scm and at velocities not exceeding that determined by the following formula:

$$v(\text{ft/sec}) = 28.75 + 0.867\ HC$$

where v = maximum gas velocity in ft/sec, standard conditions,

HC = heat content of the combusted gas in Btu/scf.

The EPA has a program underway to determine more exactly the efficiencies of flares used in the petroleum/SOCMI industries and a flare test facility has been constructed. The combustion efficiency of four flares (3.8 to 30.5 cm dia.) will be determined and the effect on efficiency of flare operating parameters, weather factors, and heat content will be established. The efficiency of larger flares will be estimated by scaling. A final report of this work should be available in the spring of 1984.

3.1.1.2 Applicability of Flares. A typical polymer plant produces several hundred million pounds of product per year. Because of this huge throughput, the VOC emissions that result from frequent process upsets are also large. Flares are used mainly to minimize the safety risk caused by emergency blowdowns from high pressure processes where large volumes of gases with variable composition must be released from the plant almost instantaneously. Flares are ideal for this service and their reliability, as measured by absence of explosions and plant fires, has been demonstrated repeatedly. Flares also effectively eliminate the hazard of process streams which, during startup or shutdown, would otherwise vent to the atmosphere and could also create an explosion or toxic hazard. Finally, flares are also used to burn co-products or by-products of a process that has too little value to reclaim, and thus would otherwise be a continuous VOC emission during normal operation of the unit. This practice, which was the standard practice for low pressure processes such as the liquid phase polypropylene and polyethylene processes,

has become less common during the past decade as the value of VOC stream components has dramatically increased.

3.1.2 Thermal Incinerators

The design and operation of thermal incinerators are influenced by operating temperature, residence time, desired VOC destruction efficiency, offgas characteristics, and combustion air. Operating temperatures may typically be between 650°C (1,200°F) and 980°C (1,800°F) with a residence time of 0.3 to 1.0 second.[12] The temperature theoretically required to achieve complete oxidation depends on the nature of the chemical involved and can be determined from kinetic rate studies.[13] The design of the combustion chamber should maximize the mixing of the VOC stream, combustion air, and hot combustion products from the burner. This helps ensure that the VOC contacts sufficient oxygen while at combustion temperature, for maximum combustion efficiency.

The heating value and water content of the waste gas feed and the excess combustion air delivered to the incinerator also affect incinerator design and operation. Heating value is a measure of the heat produced by the combustion of the VOC in the waste gas. Gases with a heating value less than 1,860 kJ/scm (50 Btu/scf) will not burn and require auxiliary fuel to maintain combustion. Auxiliary fuel requirements can be reduced and sometimes even eliminated by transferring heat from the exhaust gas to the inlet gas. Offgases with a heating value between 1,860 kJ/scm (50 Btu/scf) and 3,720 kJ/scm (100 Btu/scf) can support combustion but require some auxiliary fuel to ensure flame stability, i.e., avoid a flameout. Theoretically, offgases with a heating value above 3,720 kJ/scm (100 Btu/scf) possess enough heat content to not require auxiliary fuel (although practical experience has shown that 5,580 kJ/scm (150 Btu/scf) and above may be necessary)[14] and these offgases may be used as a fuel gas or boiler feed gas.[15] A thermal incinerator handling offgas streams with varying heating values and moisture content requires periodic adjustment to maintain the proper chamber temperatures and operating efficiency. Increases in heat content reduce auxiliary fuel requirements, whereas increases in water content can substantially increase fuel requirements.

Incinerators are always operated with excess air to ensure a sufficient supply of oxygen. The amount of excess air used varies with the fuel

and burner type but should be kept as low as possible. Using too much excess air wastes fuel because this air must be raised to the combustion temperature but does not contribute any heat by participating in the oxidation reaction. Large amounts of excess air also increase the flue gas volume and may cause an operator to invest in a larger system than required.

A thermal incinerator usually contains a refractory-lined chamber (which may vary in cross-sectional size along its length) containing a burner at one end. Because of the risk to the refractory, incinerators are neither brought quickly up to nor cooled down quickly from operating temperatures. They require a fairly constant fuel input to maintain combustion temperature. A diagram of a thermal incinerator using discrete burners is shown in Figure 3-3. (Numbers in parentheses following the mention of equipment parts or streams denote the numbered items on the referenced figures.) Discrete dual fuel burners (1) and inlets for the offgas (2) and combustion air (3) are arranged in a premixing chamber (4) to thoroughly mix the hot products from the burners with the offgas air streams. The mixture of hot reacting gases then passes into the main combustion chamber (5). This section is sized to allow the mixture enough time at the elevated temperature for the oxidation reaction to be completed (residence times of 0.3 to 1 second are common). Energy can then be recovered from the hot flue gases with the installation of a heat recovery section (6). Preheating of combustion air or the process waste offgas fed to the incinerator by the incinerator exhaust gases will reduce auxiliary fuel usage. In some instances, the incinerator exhaust gas may be used in a waste heat boiler to generate steam. Insurance regulations require that if the process waste offgas is preheated, the VOC concentration must be maintained below 25 percent of the lower explosive limit (LEL) to minimize explosive hazards.[16]

Thermal incinerators designed specifically for VOC incineration with natural gas as the auxiliary fuel may use a grid-type (distributed) gas burner similar to that shown in Figure 3-4. The tiny gas flame jets (1) on the grid surface (2) ignite the vapors as they pass through the grid. The grid acts as a baffle for mixing the gases entering the chamber (3). This arrangement ensures burning of all vapors using less fuel and a shorter burning length in the duct than conventional forward

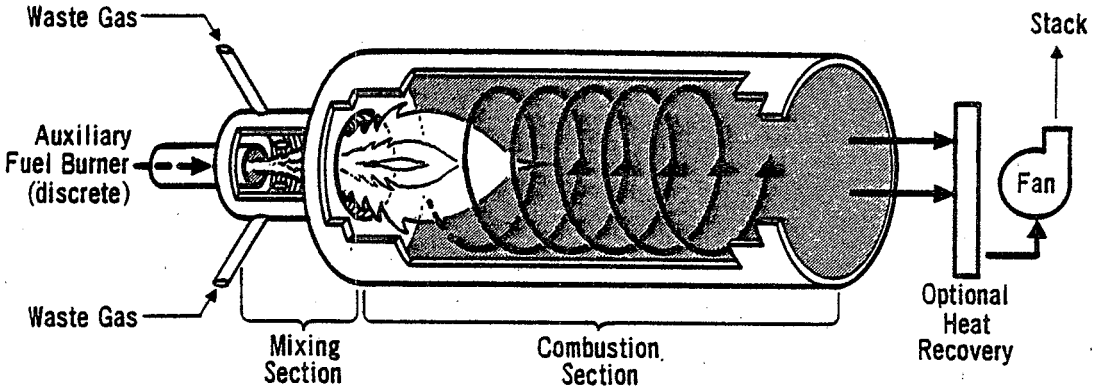

Figure 3-3. Discrete Burner Thermal Incinerator

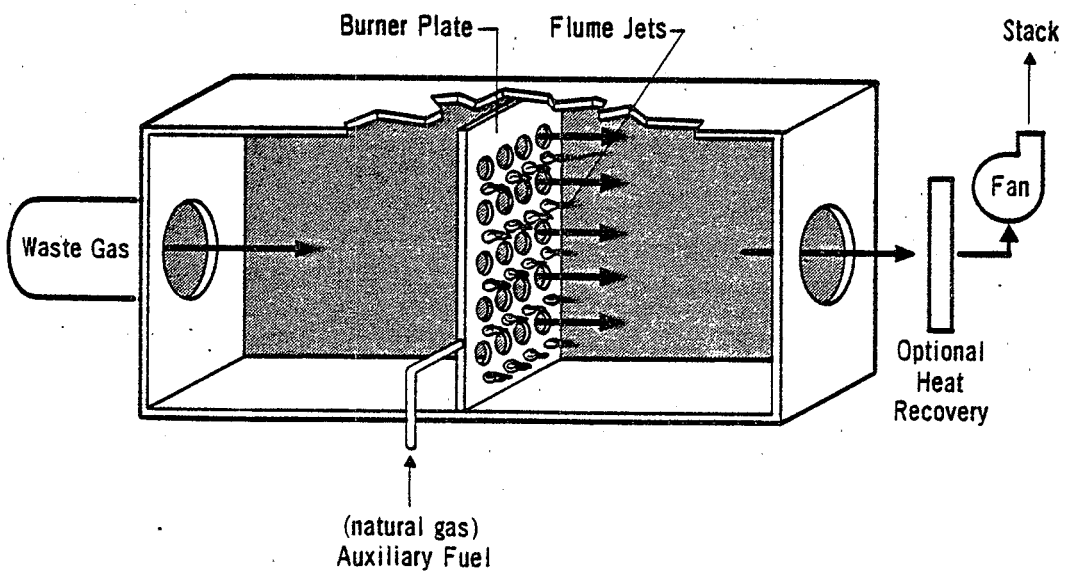

Figure 3-4. Distributed Burner Thermal Incinerator

flame burners. Overall, this system makes possible a shorter reaction chamber while maintaining high efficiency.[17]

Thermal incinerators used to burn halogenated VOC's often use additional equipment to remove the corrosive combustion products. The flue gases are quenched to lower their temperature and routed through absorption equipment such as spray towers or liquid jet scrubbers to remove the corrosive gases from the exhaust.[18]

Packaged, single unit thermal incinerators are available in many sizes to control streams with flowrates from a few hundred scfm up to about 50,000 scfm. A typical thermal incinerator built to handle a VOC waste stream of 850 scm/min (30,000 scfm) at a temperature of 870°C (1,600°F) with 0.75 second residence time would probably be a refractory-lined cylinder. With the typical ratio of flue gas to waste gas of about 2.2, the chamber volume necessary to provide for 0.75 second residence time at 870°C (1,600°F) would be about 100 m^3 (3,500 ft^3). If the ratio of the chamber length to the diameter is 2, and if a 30.5 cm (1 ft) wall thickness is allowed, the thermal incinerator would measure 8.3 m (27 ft) long by 4.6 m (15 ft) wide, exclusive of heat exchangers and exhaust equipment.

3.1.2.1 Thermal Incinerator VOC Destruction Efficiency. The destruction efficiency of an incinerator can be affected by variations in chamber temperature, residence time, inlet concentration, compound type, and flow regime (mixing). Of these, chamber temperature, residence time, and flow regime are the most important.

When the temperature exceeds 700°C (1,290°F), the oxidation reaction rate is much faster than the rate at which mixing can take place, so VOC destruction becomes more dependent upon the fluid mechanics within the combustion chamber.[19] Variations in inlet concentration also affect the VOC destruction efficiency achievable; kinetics calculations describing the combustion reaction mechanisms indicate much slower reaction rates at very low compound concentrations. Therefore, at low VOC concentration, a greater residence time is required to achieve a high combustion efficiency.

Test results show that a VOC control efficiency of 98 percent can be achieved consistently for many VOC compounds by well-designed units and can be met under a variety of operating conditions:[20,21] combustion

chamber temperatures ranging from 700 to 1,300°C (1,300 to 2,370°F) and residence times of 0.5 to 1.5 seconds. The test results covered the following VOC compounds: C_1 to C_5 alkanes and olefins, aromatics (benzene, toluene, and xylene), oxygenated compounds (methyl ethyl ketone and isopropanol), chlorinated organics (vinyl chloride), and nitrogen-containing species (acrylonitrile and ethylamines). Although a combustion chamber temperature of 870°C (1600°F) and a residence time of 0.75 seconds was chosen for the cost analysis, the test results show that 98 percent destruction efficiency is sometimes available at temperatures of 700°C (1300°F) and residence times of 0.5 to 1.5 seconds.[20]

Based on the studies of thermal incinerator efficiency, auxiliary fuel use, and costs, EPA has concluded that 98 percent VOC destruction, or a 20 parts per million by volume (ppmv) compound exit concentration (whichever is less stringent), is the highest reasonable control level achievable by all new incinerators considering current technology.[22]

3.1.2.2 Applicability of Thermal Incinerators. Thermal incinerators can be used to control a wide variety of continuous waste gas streams (one has been observed in a polypropylene plant[23]). They can be used to destroy VOC in streams with any concentration and type of VOC. Although they accommodate minor fluctuations in flow, incinerators are not well suited to streams with intermittent flow because of the large auxiliary fuel requirements during periods when there is no fuel contribution from the waste gas, yet the chamber temperature must be maintained to protect the incinerator lining.

For extremely dilute streams, a catalytic incinerator might be a favorable choice over a thermal incinerator if supplemental fuel requirements are of principal concern. However, most waste gas streams in this industry contain enough heating value to support a flame by itself on a properly designed flame burner. Such streams can be considered for use as fuel gas or boiler feed gas, from which the recovery of energy may more than compensate for a thermal incinerator's capital costs.

3.1.3 Catalytic Incinerators

The control principles and equipment used in catalytic incineration are similar to those employed in conventional thermal incineration. The VOC-containing waste gas stream is heated to an appropriate reaction temperature and then oxidation is carried out at active sites on the

surface of a solid catalyst. The catalyst increases the rate of oxidation, allowing the reaction to occur at a lower temperature than in thermal incineration. This technique may offer advantages over thermal incineration in auxiliary fuel savings where low VOC content makes large fuel usage necessary. Catalytic incinerators also may produce less NO_x because of lower combustion temperatures and smaller excess air requirements.

Combustion catalysts are made by depositing platinum or platinum alloys, copper oxide, chromium, or cobalt on an inert substrate, which is suitably shaped to fit the mechanical design of the incinerator. The operating temperature of the catalyst is usually from 315°C (600°F) to 650°C (1,200°F). Combustion may not occur below 315°C (600°F) and temperatures higher than 650°C (1,200°F) may shorten the catalyst life or even evaporate catalyst from the support substrate.[24] Accumulation of particulate matter, condensed VOC's, or polymerized hydrocarbons on the catalyst can block the active sites and reduce its effectiveness. Catalysts can also be contaminated and deactivated by compounds containing sulphur, bismuth, phosphorous, arsenic, antimony, mercury, lead, zinc, tin, or halogens. If the catalyst is so "poisoned," VOC's will pass through unreacted or only partially oxidized. Catalytic incinerators can operate efficiently treating offgas streams with VOC concentrations below the lower explosive limit. This is a distinct advantage over thermal incinerators which would in this situation require auxiliary fuel.

A schematic of a catalytic incinerator unit is shown in Figure 3-5. During operation, the waste gases (1) first enter the mixing chamber (also called the preheat zone) (3) where they are heated by contact with the hot combustion products of a burner (2). The mixing chamber temperature may vary as a function of the composition and type of contaminants to be oxidized, but will generally operate in the range of 343°C (650°F) to 593°C (1,100°F).[25] The heated mixture then passes through the catalyst bed (4) where oxygen and VOC's diffuse to the catalyst and are adsorbed on its surface. The oxidation reaction takes place at these "active sites." Reaction products desorb from the active sites and diffuse back into the waste gas. As with the exhaust gases from thermal incinerators, the products of combustion leaving the bed may be used in a waste heat recovery device (5) before being exhausted to the atmosphere.

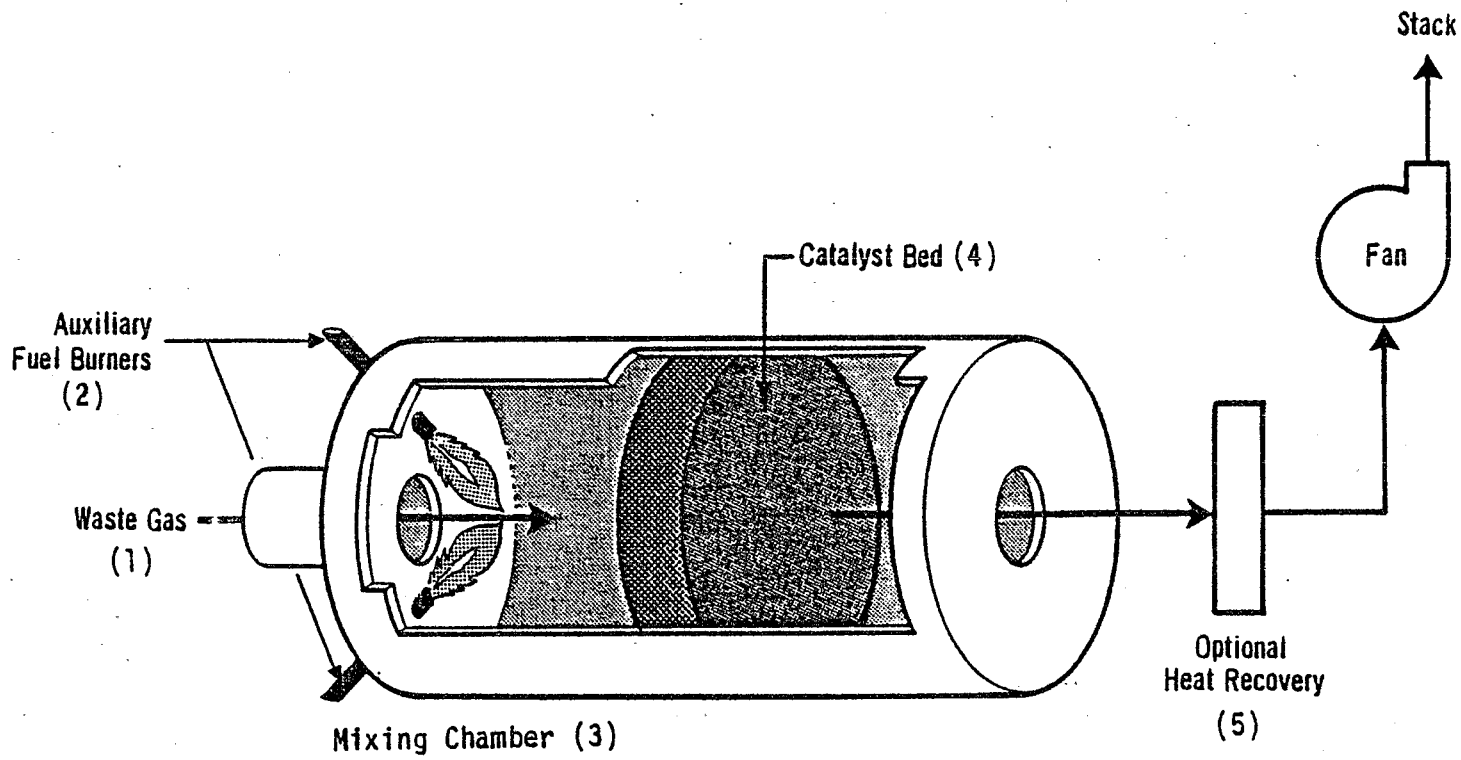

Figure 3-5. Catalytic Incinerator

3.1.3.1 Catalytic Incinerator VOC Destruction Efficiency. The destruction efficiency of catalytic incinerators is a function of many variables, including type of catalyst, its surface area, volume, and pore size distribution, gas composition, uniformity of flow through the catalyst bed, oxygen concentration, and temperature in the unit.[26,27]

The efficiency of a catalytic incinerator will deteriorate over time, necessitating periodic replacement of the catalyst. The replacement time varies widely, depending on the service of the unit, from less than 1 year up to 10 years,[12] with an average life between 3 and 5 years.[28]

A 1980 study by Engelhard Industries for the EPA involved testing of both pilot and full-scale catalytic incineration systems. The full-scale unit installed on a formaldehyde plant achieved control efficiencies ranging from 97.9 to 98.5 percent. These efficiencies represent overall control levels for carbon monoxide, methanol, dimethyl ether, and formaldehyde. Measurements indicated the ability of the system to control at this level consistently over a 1-year period. No trend in the data points gave indication of a maximum catalyst life.[29]

3.1.3.2 Applicability of Catalytic Incinerators. A catalytic incinerator is best applied to a continuous stream that is (1) low in VOC (higher VOC concentrations lead to higher catalyst temperatures, which can seriously damage the catalyst activity and possibly create fire hazards) and (2) free from solid particles and catalyst "poisons." A catalytic incinerator in many situations may be favored over a thermal incinerator because it can destroy the VOC at a lower temperature and, therefore, use less fuel. However, since most of the streams involved in the polymers and resins industry are high enough in heating value to self-combust without using auxiliary fuel, virtually no advantage is achieved by using a catalytic unit and their applicability in this industry is very limited.

3.1.4 Industrial Boilers

Fireboxes of boilers and fired heaters can be used, under proper conditions, to incinerate waste streams that contain VOC's. Combustible contaminants, including smoke, organic vapors, and gases can be converted essentially to carbon dioxide and water in boiler fireboxes. As the primary purpose of the boiler is to generate steam, all aspects of operation must be thoroughly evaluated before this method of air pollution

control can be used. Any breakdown in the boiler can result in expensive process downtime. Consequently, the risk of shutdown should be kept small and only streams that do not threaten boiler performance should be introduced.

For the satisfactory use of boilers as a control device, there are several prerequisites. Generally, the burner must be modified, the boiler must operate continuously and concurrently with the pollution source, the contaminants must be completely combustible, and the products of combustion must not corrode the materials used to construct the boiler. Corrosive VOC compounds can be combusted in a boiler, but special attention must be given to operate above the dew point of the flue gases. If these gases are allowed to condense, severe corrosion problems will occur. Further, the volumetric flowrate of low VOC concentration emission streams must be taken into consideration because they can reduce thermal efficiencies in the same way as excess combustion air does. The pressure drop caused by additional products of combustion should not exceed the draft provided by boiler auxiliaries. Boiler life, efficiency, and capacity can be affected by the presence of contaminants in the VOC emission streams. Halogens, for example, would be devastating to the life of boiler tubes. Finally, a personnel safety hazard may occur if coal-fired boilers that are not pulverized coal-fired are used to destroy organic waste. Any interruption in the air supply to these types of boilers would release into the boiler house combustion vapors and any hazardous or toxic substances that may have been injected.[30] Great care, therefore, must be exercised in selecting this mode of pollution control.

The large majority of industrial boilers are of water tube design. Water, circulated through the tubes, absorbs the heat of combustion. Drums store the superheated water from which steam is directed to external heat exchangers for use as process steam. Boilers typically operate at combustion chamber temperatures above 1,650°C (3,000°F) with a residence time of about 1 second.[31]

Both forced and natural draft burners, designed to thoroughly mix the incoming fuel and combustion air, may be used. After ignition, the mixture of hot reacting gases passes through the furnace section that is sized to allow the oxidation reaction to reach completion and to minimize

abrasion on the banks of the water tubes. Energy transfer from the hot flue gases to form steam can attain greater than 85 percent efficiency. Additional energy can be recovered from the hot exhaust gases by installation of a gas-gas heat exchanger to preheat combustion air.

Boilers designed specifically for use as a VOC control device typically use discrete or vortex burners, depending on the heating value of the vent stream. For vent streams with heating values between 1,100 kJ/scm (300 Btu/scf) and 1,850 kJ/scm (500 Btu/scf), a discrete burner would be best suited.[31] Streams with lower heating values would probably require vortex burners to ensure the desired VOC destruction.

3.1.4.1 Industrial Boiler VOC Destruction Efficiency. VOC destruction efficiency achievable by boilers depends on the same factors that affect any combustion technique. Since boiler furnaces typically operate at higher peak temperatures and with longer combustion residence times than thermal incinerators, the VOC destruction efficiency usually would be expected to match or exceed the 98 percent efficiency demonstrated in incinerators.

3.1.4.2 Applicability of Industrial Boilers. Use of a boiler for VOC emission control in the polymers and resins industry is uncommon. Despite the potential problems, boilers are being used in at least two polypropylene plants[32] and a high-density polyethylene plant.[33] The polypropylene plants supplement boiler fuel with waste gas that otherwise would be flared. The high density polyethylene plant sends the dehydrator regeneration gas (a mixture of natural gas and nitrogen) and a degassing stream from the recycle diluent step (mostly ethylene) to steam-generating boilers as a fuel.

A boiler would be used as a control device only if the process generated its own steam or the fuel value of the waste gas was sufficient to make the process a net exporter of steam. Whenever either condition exists, installation of a boiler is an excellent control measure that provides greater than 98 percent VOC destruction and very efficient recovery of the heat of combustion of the waste gas.

3.2 CONTROL BY RECOVERY TECHNIQUES

The three major recovery devices are condensers, adsorbers, and absorbers. These devices permit many organic materials to be recovered

and, in some cases, reused in the process. Condensers are widely used for recovering organics from both continuous and intermittent rich by-product streams in polystyrene manufacturing processes. The VOC is mainly styrene which is easily condensed because of its relatively high condensation temperature. The ease of styrene recovery and the ability of a condenser to handle an intermittent stream makes it a desirable control technology for all process VOC emissions in the polystyrene industry. Condensers may also be used in series with other air pollution control systems. A condenser located upstream of an incinerator, adsorber, or absorber will reduce the VOC load entering the downstream control device. The downstream device will abate most of the VOC that passes through the condenser.

Adsorbers are used on gas streams which contain relatively low VOC concentrations. Concentrations are usually well below the lower explosive limit in order to guard against overheating of the adsorbent bed. Adsorbers are often neither suitable nor the most efficient means of control for the higher VOC concentration streams characteristic of the polymers and resins industry.

Absorbers, which use low volatility liquids as absorbents, are another control option. Their use is generally limited to applications in which the spent absorbent can be used directly in a process, since desorption of the VOC from the absorbent is often prohibitively expensive.

Recovery techniques either condense the organic or contact the VOC-containing gas stream with an appropriate liquid or solid. Gases containing only one or two organic gases are easier to process by recovery techniques than multi-component mixtures. The presence of inert or immiscible components in the waste gas mixture complicates recovery techniques.

3.2.1 Condensers

Condensation devices transfer thermal energy from a hot vapor to a cooling medium, causing the vapor to condense. Condenser design thus typically requires knowledge of both heat and mass transfer processes. Heat may be transferred by any combination of three modes: conduction, convection, or radiation.

The design of a condenser is significantly affected by the number and nature of components present in the vapor stream. The entering

gases may consist of a single condensable component or any number of gaseous components which may or may not all be condensable or miscible with one another. Example gas streams found in the polystyrene industry may consist of a single condensable component (styrene); a mixture of condensable and noncondensable components (styrene and air); a mixture of condensable, but immiscible, components (styrene and steam); or a mixture of condensable, but immiscible, components with a noncondensable component (styrene, steam, and air).

Condensers are designed and sized using the principles of thermodynamics. At a fixed pressure, a pure component will condense isothermally at the saturation or equilibrium temperature, yielding a pure liquid condensate. A vapor mixture, however, does not have a single condensate temperature. As the temperature drops, condensation progresses, and the composition, temperature, enthalpy, and flowrate of both the remaining vapor and the condensate will change. These changes can be calculated from thermodynamics data, if it is assumed that the vapor and liquid condensate are in equilibrium. Variations in composition and temperature will affect most of the physical and transport properties which must be used in condenser design calculations. When these properties change, the calculations governing the heat transfer process are adjusted to accommodate these changes.

In a two-component vapor stream with one noncondensable component, condensation occurs when the partial pressure of the condensable component is equal to the component's vapor pressure. To separate the condensate from the gas at fixed pressure, the temperature of the vapor mixture must be reduced. The liquid will begin to appear when the vapor pressure of the condensable component becomes equal to its partial pressure, the "dew point." Condensation continues as the temperature is further reduced. The presence of a noncondensable component interferes with the condensation process, because a layer of noncondensable on the condensate acts as a heat transfer barrier.

Two types of condensers are employed: contact and surface. Contact, or direct, condensers cause the hot gas to mingle intimately with the cooling medium. Contact condensers usually operate by spraying a cool liquid directly into the gas stream. Contact condensers also may behave as scrubbers since they sometimes collect noncondensable vapors which

are immiscible with the coolant. The direct contact between the vapor and the coolant limits the application of contact condensers since the spent coolant can present a secondary emission source or a wastewater treatment problem,[34] unless it is economically feasible to separate the two in a subsequent process.

Surface, or indirect, condensers are usually common shell-and-tube heat exchangers. The coolant usually flows through the tubes and the vapor condenses on the outside of the tubes. In some cases, however, it may be preferable to condense the vapor inside the tubes. The condensate forms a film on the cool tube and drains to storage.[35] The shell-and-tube condenser is the optimum configuration from the standpoint of mechanical integrity, range of allowable design pressures and temperatures, and versatility in type of service. Shell-and-tube condensers may be designed to safely handle pressures ranging from full vacuum to approximately 41.5 MPa (6,000 psig), and for temperatures in the cryogenic range up to approximately 1,100°C (2,000°F).[36] Surface condensers usually require more auxiliary equipment for operation (such as a cooling tower or a refrigeration system) but offer the advantage of recovering valuable VOC without contaminating the coolant, thereby minimizing waste disposal problems. The successively more volatile material returned from the condenser to the distillation column is termed "reflux," or overhead product. The heavier compounds removed at the bottom are often called column "bottoms."[37]

The major pieces of equipment used in a typical refrigerated surface condenser system are shown in Figure 3-6.[38] Refrigeration is often required to reduce the gas phase temperature sufficiently to achieve low outlet VOC concentrations. This type of system includes dehumidification equipment (1), a shell-and-tube heat exchanger (2), a refrigeration unit (3), recovery tank (4), and operating pumps (5). Heat transfer within a shell-and-tube condenser occurs through several material layers, including the condensate film, combined dirt and scale, the tube wall, and the coolant film. The choice of coolant used depends on the saturation temperature of the VOC stream. Chilled water can be used to cool down to 4°C (40°F), brines to -34°C (-30°F), and chlorofluorocarbons below -34°C (-30°F).[39] Temperatures as low as -62°C (-80°F) may be necessary to condense some VOC streams.[34]

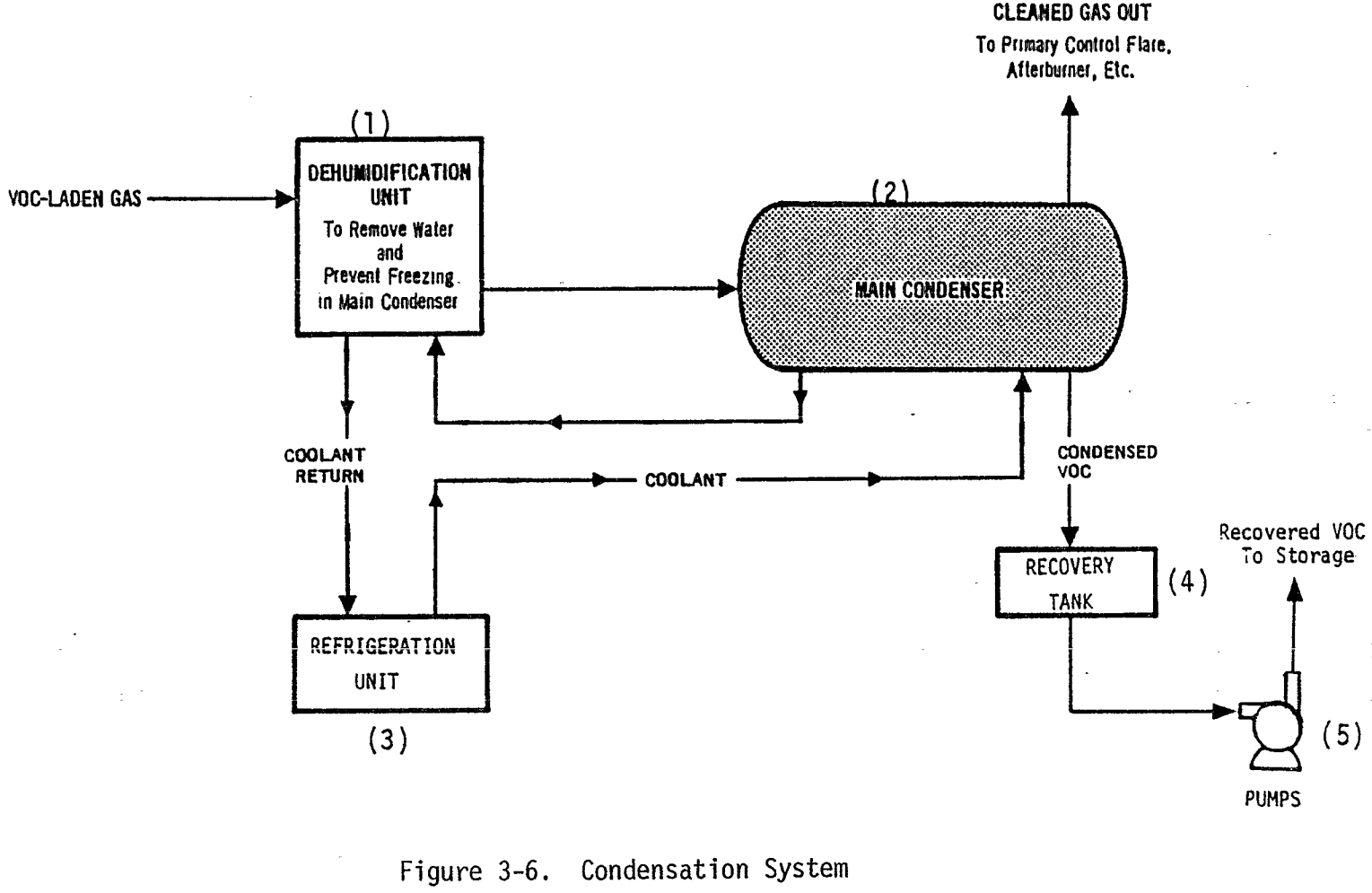

Figure 3-6. Condensation System

3.2.1.1 Condenser Control Efficiency. VOC removal efficiency of a condenser is dependent upon the composition of the stream. Single component streams with a relatively high boiling point will easily condense, resulting in essentially 100 percent control efficiency. Thus, very high efficiencies would be expected for condensers controlling such streams in the polystyrene industry. A less condensable component in the stream, however, will reduce the control efficiency because of the lower temperatures required for higher percentage removal. Water-cooled condensers sometimes cannot achieve a sufficiently low temperature to ensure high control efficiency. Better control, of course, is possible by use of a chilled coolant or even a refrigerated condenser at an increased cost. Outlet concentrations for low boiling organics may be above 10,000 ppmv to 20,000 ppmv.[40]

3.2.1.2 Applicability of Condensers. Water-cooled condensers are effective in reducing potential emissions of high boiling, easily condensable organics, and find broad application in the polystyrene manufacturing segment. Surface condensers are used to recover styrene from polystyrene vents. Condensers cannot be used to condense low boiling organics such as ethylene or propylene in streams containing large quantities of inert gases such as nitrogen. Refrigerated condensers may be a viable option unless the stream contains water or heavy organics which would freeze and foul the condenser.

3.2.2 Adsorbers

Vapor-phase adsorption utilizes the ability of certain solids to preferentially adsorb and thereby concentrate certain components from a gaseous mixture onto their surfaces. The gas phase (adsorbate) is pumped through a packed bed of the solid phase (adsorbent) where selective components are captured on its surface by physical adsorption. The organic molecules are retained at the surface of the adsorbent by means of intermolecular or Van-der-Waals forces. The adsorbed organics can be readily removed and the adsorbent regenerated.

The most common industrial vapor-phase adsorption systems use beds of activated carbon. Carbons made from a variety of natural materials (wood, coal, nut shells, etc.) are marketed for their special adsorbent properties. The multiple bed system maintains at least one bed online while another is being regenerated. Most systems direct the vapor

stream downward through a fixed carbon bed. Granular carbon is usually favored because it is not easily entrained in the exhaust stream.

Figure 3-7 is a schematic of a typical fixed bed, regenerative carbon adsorption system. The process offgases are filtered and cooled (1) to minimize bed contamination and maximize adsorption efficiency. The offgas is directed through the porous activated carbon bed (2) where adsorption of the organics progresses until the activated carbon bed is "saturated". When the bed is completely saturated, the organic will "breakthrough" the bed with the exhaust gas and the inlet gases must then be routed to an alternate bed. The saturated bed is then regenerated to remove the adsorbed material.

Low-pressure steam (3) is usually used to heat the carbon bed during the regeneration cycle, driving off the adsorbed organics, which are usually recovered by condensing the vapors (4) and separating them from the steam condensate by decanting or distillation (5). The adsorption/regeneration cycle can be repeated numerous times, but eventually the carbon loses its adsorption activity and must be replaced. The carbon can sometimes be reactivated by recharring.

3.2.2.1 Adsorber Control Efficiency. The efficiency of an adsorption unit depends on the properties of the carbon and the adsorbate, and on the conditions under which they contact. Lower temperatures aid the adsorption process, while higher temperatures reduce the adsorbent's capacity.[41] Removal efficiencies of 95 to 99 percent are achieved by well-designed and well-operated units.[42]

3.2.2.2 Applicability of Adsorbers. Adsorbers effectively control streams with dilute concentrations of organics. In fact, to prevent excessive temperatures within the bed due to the heat of adsorption, inlet concentrations of organics are usually limited to about 0.5 to 1 percent.[40] The maximum practical inlet concentration is about 1 percent, or 10,000 ppmv.[43] Higher concentrations are frequently handled by allowing some condensate to remain from the regeneration process to remove the heat generated during adsorption. Also, the inlet stream can be diluted by use of a condenser or addition of air or nitrogen upstream of the adsorber. If the organic is reactive or oxygen is present in the vent stream, then additional precautions may be necessary to safeguard the adsorption system.

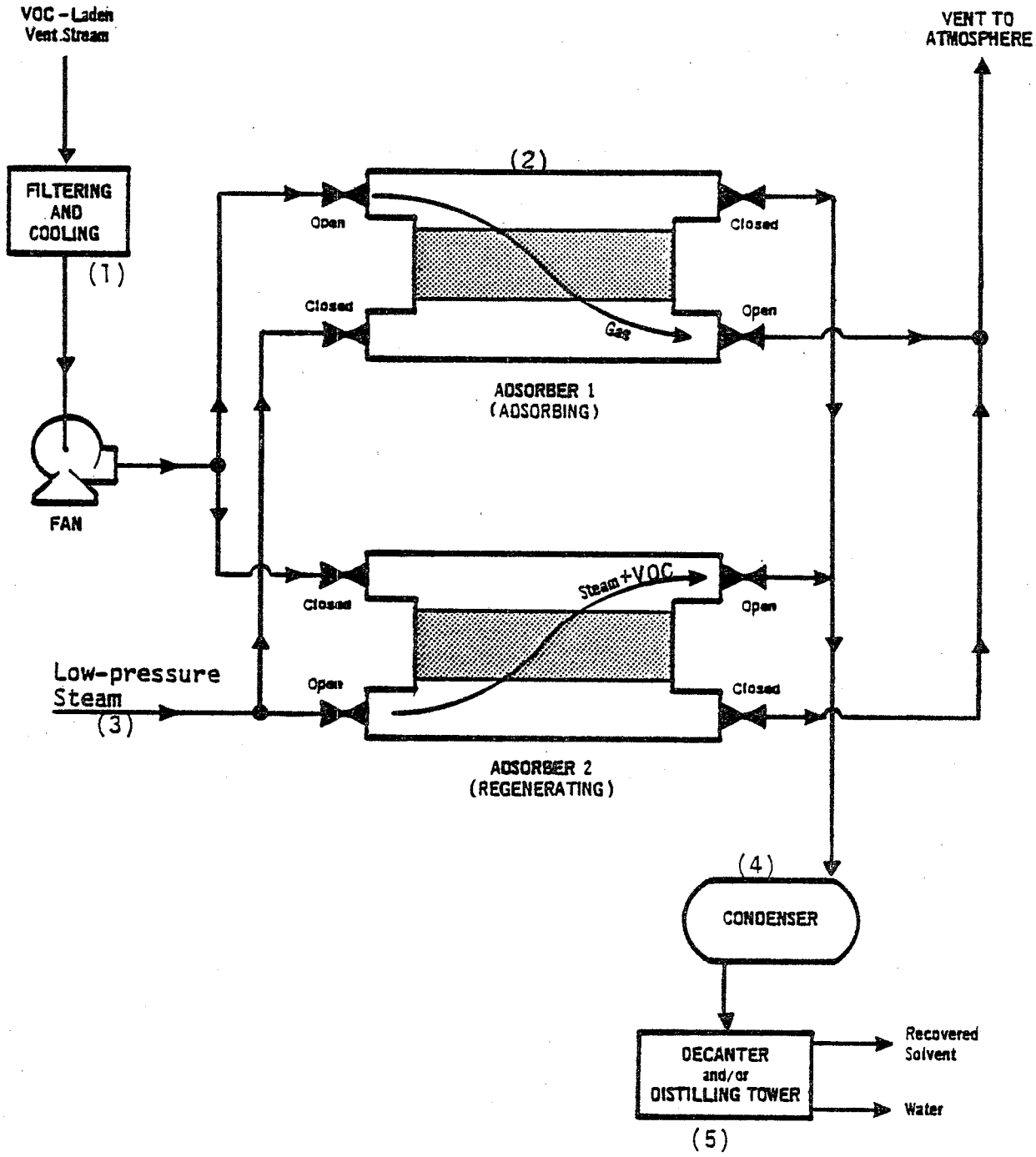

Figure 3-7. Two Stage Regenerative Adsorption System

Adsorbers can foul and hence are not very suitable for streams containing fine particles or polymerizeable monomers. Both can contaminate the beds and result in poor performance, or even introduce safety problems. Because of their limitations in certain gas streams, carbon adsorbers are not ideally suited for most of the emission streams encountered in the polymers and resins industry.

3.2.3 Absorbers

Absorption is a gas-liquid mass transfer operation in which a gas mixture is contacted with a liquid (solvent) for the purpose of preferentially dissolving one or more components (solutes) of the gas. Absorption may entail only the physical phenomenon of solution or may also involve chemical reaction of the solute with constituents of the solvent.[44]

For any given solvent, solute, and set of operating conditions, there exists a theoretical equilibrium ratio of solute concentration in the gas mixture to solute concentration in the solvent. The driving force for mass transfer in an operating absorption tower is related to the difference between the actual concentration ratio and this equilibrium ratio.[45] The solvents used are chosen for high solute (VOC) solubility and include liquids such as water, mineral oil, nonvolatile hydrocarbon oils, and aqueous solutions of oxidizing agents like sodium carbonate and sodium hydroxide.[46]

Devices based on absorption principles include spray towers, venturi scrubbers, packed columns, and plate columns. Spray towers and venturi scrubbers are generally restricted to particulate removal and control of high-solubility gases.[47] Most VOC control by gas absorption is by packed or plate columns. Packed columns are used mostly for handling corrosive materials, liquids with foaming or plugging tendencies, or where excessive pressure drops would result from the use of plate columns. They are less expensive than plate columns for small-scale or pilot plant operations where the column diameter is less than 0.6 m (2 ft). Plate columns are preferred for large-scale operations, where internal cooling is desired, or where low liquid flowrates would inadequately wet the packing.[48]

A schematic of a packed tower is shown in Figure 3-8. The gas is introduced at the bottom (1) and rises through the packing material (2). Solvent flows by gravity from the top of the column (3), countercurrent

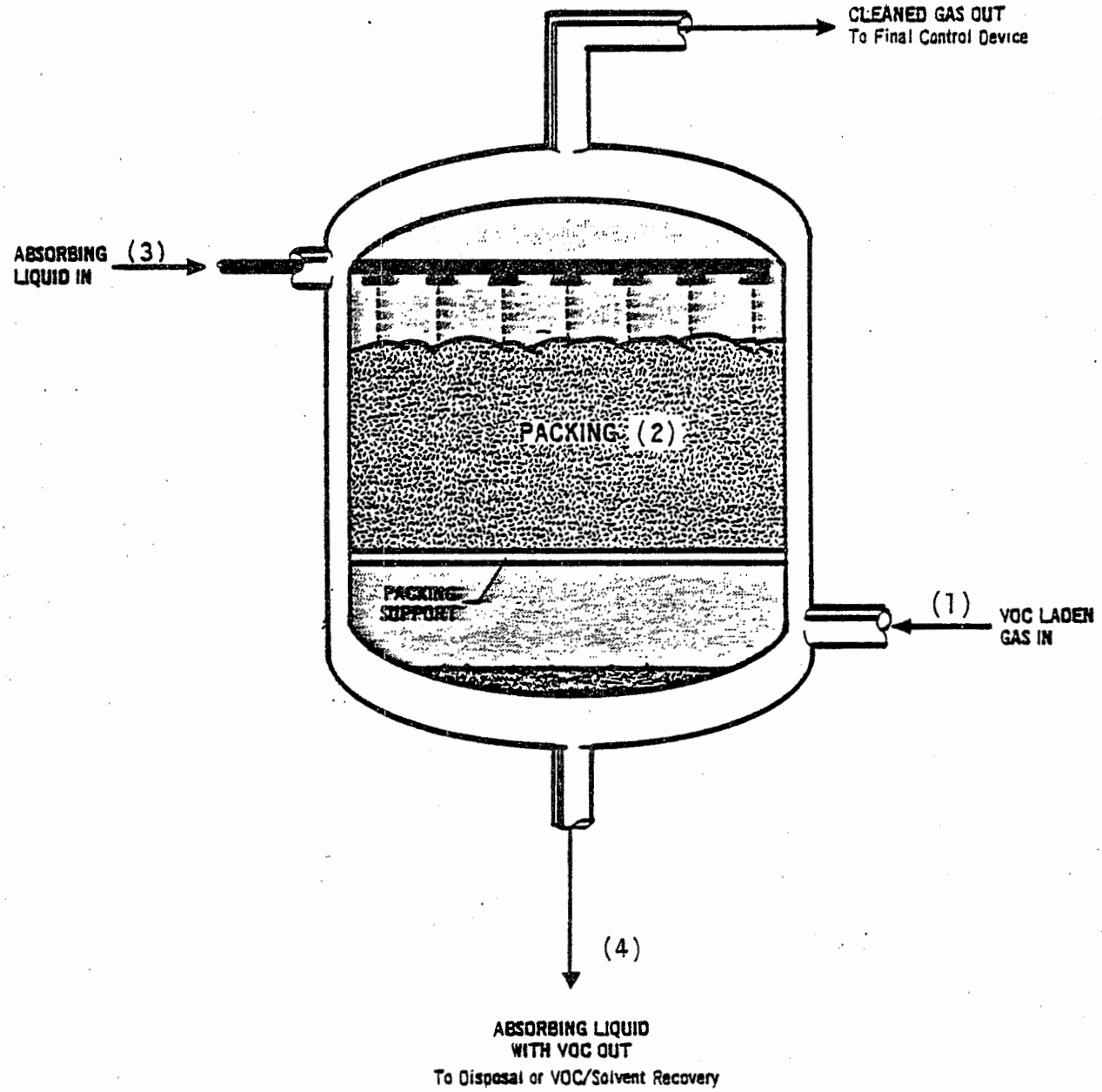

Figure 3-8. Packed Tower for Gas Absorption

to the vapors, absorbing the solute from the gas phase and carrying the dissolved solute out of the tower (4). Cleaned gas exiting at the top is ready for release or final treatment such as incineration.

The major tower design parameters, column diameter and height, pressure drop, and liquid flowrate, are based on the specific surface area of the tower packing, the solubility and concentration of the components, and the quantity of gases to be treated.

3.2.3.1 Absorber Control Efficiency. The VOC removal efficiency of an absorption device is very dependent on the characteristics of the solvent and the design and operation of the tower. Generally, for a given solvent and solute, an increase in absorber size or a decrease in the operating temperature can increase the VOC control efficiency of the system.

Systems that utilize organic liquids as the solvent usually include a separate item of equipment to strip the adsorbed gas so that the solvent can be recycled to the absorber. The efficiency of the absorber is affected by the efficiency of the stripper. For example, a theoretical absorber calculated to achieve a removal efficiency of 99.9 percent with once-through solvent usage (equivalent to 100 percent stripping efficiency), would achieve only 98.5 percent VOC removal if the solvent were recycled through a stripper which was 98 percent efficient.[49]

3.2.3.2 Applicability of Absorbers. The selection of absorption for VOC control depends on the availability of an appropriate solvent for the specific VOC. Absorption is usually not considered when the VOC concentration is below 200-300 ppmv.[50]

The use of absorbers is generally limited to applications in which the stripped absorbent can be reused directly or with minimum treatment. Absorption may not be practical if the waste gas stream contains a mixture of organics, since all will likely not be highly soluble in the same absorbent. Absorbers have found limited use as a VOC emission control device in the polymers and resins industry.

3.3 REFERENCES FOR CHAPTER 3

1. Lee, K.C., H.J. Jahnes, and D.C. Macauley. Thermal Oxidation Kinetics of Selected Organic Compounds. Journal of the Air Pollution Control Association. 29:749-751. July 1979. p. 750.

2. Perry, R.H. and C.H. Chilton. Chemical Engineers' Handbook, Fifth Edition. McGraw-Hill Book Company. 1973. p. 9-18.

3. Kalcevic, V. Emission Control Options for the Synthetic Organic Chemicals Manufacturing Industry, Control Device Evaluation, Flares and the Use of Emissions as Fuels. U. S. Environmental Protection Agency. Research Triangle Park, N.C. Publication No. EPA-450/3-80-026. December 1980.

4. Klett, M.G. and J.B. Galeski. Flare Systems Study. Lockheed Missiles and Space Company. NTIS Report PB-251664. Publication No. 600/2-76-079. March 1976.

5. Payne, R., D. Joseph, J. Lee, C. McKinnon, and J. Pohl. Evaluation of the Efficiency of Industrial Flares Used to Destroy Waste Gases. Phase I Interim Report - Experimental Design. EPA Contract No. 68-02-3661. Draft, January 1982. p. 2-20.

6. Palmer, P.A. A Tracer Technique for Determining Efficiency of an Elevated Flare. E.I. duPont de Nemours and Company. Wilmington, DE. 1972.

7. Siegel, K.D. Degree of Conversion of Flare Gas in Refinery High Flares. University of Karlsruhe, The Federal Republic of Germany. Ph.D. Dissertation. February 1980.

8. Lee, K.C. and G.M. Whipple. Waste Gas Hydrocarbon Combustion in a Flare. Union Carbide Corporation. South Charleston, W.V. (Presented at the 74th Annual Meeting of the Air Pollution Control Association. Philadelphia, PA. June 21-26, 1981.)

9. Howes, J.E., T.E. Hill, R.N. Smith, G.R. Ward, and W.F. Herget. Development of Flare Emission Measurement Methodology. EPA Contract No. 68-02-2682. Draft, 1981.

10. Reference 5, p. 2-44 to 2-76.

11. McDaniel, M. Flare Efficiency Study, Volume I. Engineering-Science. Austin, Texas. Prepared for Chemical Manufacturers Association, Washington, D.C. Draft 2, January 1983.

12. Kenson, R.E. A Guide to the Control of Volatile Organic Emissions. Systems Division, MET-PRO Corporation. Technical Page 10T-1. Harleysville, PA. 1981.

13. Reference 1, p. 749.

14. Keller, M. Comment on Control Techniques Guideline Document for Control of Volatile Organic Compounds Emissions from Manufacturing of High-Density Polyethylene, Polypropylene, and Polystyrene Resins. NAPCTAC Meeting. June 1, 1981. p. 6.

15. Blackburn, J.W. Organic Chemical Manufacturing, Volume 4: Combustion Control Devices, Report 1, Thermal Oxidation. U. S. Environmental Protection Agency. Research Triangle Park, N.C. Publication No. EPA-450/3-80-026. December 1980. p. I-1.

16. Basdekis, H.S. Organic Chemical Manufacturing, Volume 4: Combustion Control Devices, Report 2, Thermal Oxidation Supplement (VOC Containing Halogens or Sulfur). U. S. Environmental Protection Agency. Research Triangle Park, N.C. Publication No. EPA-450/3-80-026. December 1980. p. I-2 and I-4.

17. North American Manufacturing Company. North American Combustion Handbook. Cleveland, North American Mfg. Company. 1978. p. 264.

18. Reference 16, p. I-1 and I-2.

19. Stern, A.C., ed. Air Pollution, Third Edition, Volume IV, Engineering Control of Air Pollution. New York, Academic Press. 1977. p. 368.

20. Mascone, D.C. Thermal Incinerator Performance for NSPS. U. S. Environmental Protection Agency. Research Triangle Park, N.C. Memorandum to J.R. Farmer, Chemicals and Petroleum Branch. June 11, 1980.

21. Mascone, D.C. Thermal Incinerator Performance for NSPS, Addendum. U. S. Environmental Protection Agency. Research Triangle Park, N.C. Memorandum to J.R. Farmer, Chemicals and Petroleum Branch. July 22, 1980.

22. Reference 20, p. 1.

23. EEA, Incorporated. Trip Report to ARCO Polymers, Inc. EPA Contract No. 68-02-3061, Task 2. 1980.

24. U. S. Environmental Protection Agency, Office of Air and Waste Management. Control Techniques for Volatile Organic Emissions from Stationary Sources. Research Triangle Park, N.C. Publication No. EPA-450/2-78-022. May 1978. P. 32.

25. U. S. Environmental Protection Agency, Office of Air and Water Programs. Air Pollution Engineering Manual. Research Triangle Park, N.C. Publication No. AP-40. May 1973. p. 180.

26. Reference 25, p. 181.

27. Reference 24, p. 34.

28. Key, J. A. Organic Chemical Manufacturing, Volume 4: Combustion Control Devices, Report 3, Catalytic Oxidation. U. S. Environmental Protection Agency. Research Triangle Park, N.C. Publication No. EPA-450/3-80-026. December 1980. p. II-9.

29. Engelhard Industries Division, Engelhard Corporation. Catalytic Incineration of Low Concentration Organic Vapors. Prepared for U. S. Environmental Protection Agency. Washington, D.C. Contract No. 68-02-3133. January 1981.

30. Letter from Monsanto Company to J.R. Farmer, U. S. Environmental Protection Agency. April 19, 1982. p. 17.

31. Memo from Senyk, D., EEA, Inc., to Distillation file.

32. Shell Chemical Company, Woodbury Plant. Application for Permit to Construct, Install or Alter Control Apparatus or Equipment. To New Jersey State Department of Environmental Protection. March 16, 1976.

33. EEA, Incorporated. Trip Report to Phillips Chemical Company. EPA Contract No. 68-02-3061, Task 2. August 8, 1980.

34. Erikson, D.G. Organic Chemical Manufacturing, Volume 5: Adsorption, Condensation, and Absorption Devices, Report 2, Condensation. U. S. Environmental Protection Agency. Research Triangle Park, N.C. Publication No. EPA-450/3-80-027. December 1980. p. II-3.

35. Reference 24, p. 84.

36. Devore, A., G.J. Vago, and G.J. Picozzi. Heat Exchangers: Specifying and Selecting. Chemical Engineering. 87(20):133-148. October 1980. p. 136.

37. Kern, D.Q. Process Heat Transfer. New York, McGraw-Hill Book Company. 1950. p. 255.

38. Reference 34, p. II-4.

39. Reference 34, p. IV-1.

40. Parmele, C.S., W.L. O'Connell, and H.S. Basdekis. Vapor-Phase Adsorption Cuts Pollution, Recovers Solvents. Chemical Engineering. 86(28):58-70. December 1979. p. 60.

41. Basdekis, H.S. and C.S. Parmele. Organic Chemical Manufacturing, Volume 5: Adsorption, Condensation, and Absorption Devices, Report 1, Carbon Adsorption. U. S. Environmental Protection Agency. Research Triangle Park, N.C. Publication No. EPA-450/3-80-027. December 1980. p. II-1.

42. Reference 40, p. 69.

43. Reference 40, p. 62.

44. Reference 2, p. 14-2.

45. Standifer, R.L. Organic Chemical Manufacturing, Volume 5: Adsorption, Condenstation, and Absorption Devices, Report 3, Gas Absorption. U. S. Environmental Protection Agency. Research Triangle Park, N.C. Publication No. EPA-450/3-80-027. December 1980. p. III-5.

46. Reference 24, p. 76.

47. Reference 45, p. II-1.

48. Reference 2, p. 14-10.

49. Reference 45, p. III-6 and III-7.

50. Reference 45, p. I-1.

4.0 ENVIRONMENTAL ANALYSIS OF RACT

4.1 INTRODUCTION

The environmental impact of the systems considered representative of reasonably available control technology (RACT) is essentially two-fold. Primary impacts are those attributed directly to the control systems, such as reduced levels of specific pollutants. Secondary impacts are indirect or induced in nature, such as aggravation of another pollutant problem through utilization of a particular control system. Both beneficial and adverse environmental impacts related to each of the pollution categories, air, water, and solid waste are assessed in the following sections. Also a discussion of the additonal amount and type of energy required for control is included.

The following emission reductions or limitations are considered representative of RACT:

(1) For polypropylene plants using liquid phase processes: a 98 weight percent reduction or reduction to 20 ppm of continuous VOC emissions from the polymerization reaction section (i.e., reactor vents), the material recovery section (i.e., decanter vents, neutralizer vents, by-product and diluent recovery operations vents), and the product finishing section (i.e., dryer vents and extrusion and pelletizing vents).

(2) For high-density polyethylene plants using liquid phase slurry processes: a 98 weight percent reduction or reduction to 20 ppm of continuous VOC emissions from the material recovery section (i.e., ethylene recycle treater vents) and the product finishing section (i.e., dryer vents and continuous mixer vents).

(3) For polystyrene plants using continuous processes: an emission limit of 0.12 kg VOC/1,000 kg product from the material recovery section (i.e., product devolatilizer system).

These RACT recommendations were made on the basis of a single control device controlling all vents of VOC emissions. Many, if not most, existing plants will have already some control that is representative of RACT. At these plants, additional emission control may be obtained at the expense of installing an additional control device, which may be controlling emissions from a single process section only. The costs of gaining additional emission reduction, therefore, depends upon the level of control already employed at an existing plant. For existing plants that already have RACT level controls on most vents, a State may find that control of the remaining vents may be very expensive in terms of dollars per Mg of VOC emission reduction and the installation of a separate control device to reduce these emissions, while technically feasible, may not be reasonable.

Tables 4-1 through 4-3 present emission rates (and their equivalent annual emissions) associated with various levels of control cost (expressed as dollars per Mg of VOC reduction) for two potential control situations. (Appendix F details the derivation of these numbers.) The first situation is where a new single control device is needed to control the emissions from one of the process sections in a single process line. The second potential control situation is where a new single control device is needed to control the emissions from one of the process sections throughout the entire plant (i.e., across process lines). Using the emission rates (or annual emission levels) at one of the optional cost-effectiveness cut-off levels as a guideline, States may exempt plants with uncontrolled emissions at or below these emission levels. However, it must be emphasized that the emission levels in Tables 4-1 through 4-3 were based on a general model plant and used approximate cost equations. Specific plants may have different stream characteristics, the potential to combine streams, or utilize existing control devices that would make control of emissions at levels below those presented in Tables 4-1 through 4-3 reasonable. Thus, the States are encouraged to use a case-by-case approach for exempting any uncontrolled emission stream from the general 98 percent reduction (or to 20 ppm reduction) requirement.

Combustion control devices such as flares, thermal and catalytic incinerators, boilers, and process heaters can achieve 98 percent VOC destruction. The following paragraphs discuss, as appropriate, the

Table 4-1. UNCONTROLLED EMISSION RATES VERSUS COST EFFECTIVENESS FOR POLYPROPYLENE PLANTS BASED ON MODEL PLANT PARAMETERS, BY PROCESS SECTION

A. SINGLE PROCESS SECTION WITHIN A SINGLE LINE (47 Gg capacity)

Process Section	Control Costs, $/Mg[a]	Uncontrolled Emission Rates	
		kg VOC/Mg Product[b]	Mg/yr[c]
Polymerization Reaction	1,000	0.45	20.9
	2,000	0.23	10.4
	3,000	0.15	7
Material Recovery	1,000	0.50	23.0
	2,000	0.25	11.5
	3,000	0.17	7.7
Product Finishing	1,000	2.57	121
	2,000	1.20	56
	3,000	0.77	36
Raw Materials Preparation[d]	1,000	0.45	20.9
	2,000	0.23	10.4
	3,000	0.15	7

B. SINGLE PROCESS SECTION ACROSS LINES (141 Gg capacity)

Process Section	Control Costs, $/Mg[a]	Uncontrolled Emission Rates	
		kg VOC/Mg Product[b]	Mg/yr[c]
Polymerization Reaction	1,000	0.16	22.3
	2,000	0.08	11.1
	3,000	0.06	7.4
Material Recovery	1,000	0.21	28.5
	2,000	0.10	14.2
	3,000	0.07	9.5
Product Finishing	1,000	0.83	116
	2,000	0.39	55
	3,000	0.26	36
Raw Materials Preparation[d]	1,000	0.16	22.3
	2,000	0.08	11.1
	3,000	0.06	7.4

[a] Based on 98 percent reduction in the uncontrolled emission rate.

[b] Emission rates have been rounded up to the nearest one-hundreth.

[c] Equivalent uncontrolled annual emissions (Mg/yr) were calculated by multiplying the unrounded emission rate (kg VOC/Mg product) times production capacity (i.e., 47 Gg or 141 Gg).

[d] Typical emissions from the raw materials preparation section are relatively small so that the cost of emission reduction is considered unreasonable. Therefore, control of these emissions is not part of the RACT recommendations. However, emission levels may vary from plant to plant. If raw materials preparation emissions are at these levels or higher (as indicated in the table), the State may choose to require their control. Furthermore, if raw materials preparation emissions can be combined with other uncontrolled emissions (for example, from the material recovery section), then it is reasonable to control raw materials preparation emissions at even lower emission levels.

Table 4-2. UNCONTROLLED EMISSION RATES VERSUS COST EFFECTIVENESS FOR HIGH-DENSITY POLYETHYLENE PLANTS BASED ON MODEL PLANT PARAMETERS, BY PROCESS SECTION

A. SINGLE PROCESS SECTION WITHIN A SINGLE LINE (71.3 Gg capacity)

Process Section	Control Costs, $/Mg[a]	Uncontrolled Emission Rates	
		kg VOC/Mg Product[b]	Mg/yr[c]
Material Recovery	1,000	0.30	20.9
	2,000	0.15	10.5
	3,000	0.10	7
Product Finishing	1,000	0.87	61.9
	2,000	0.41	28.6
	3,000	0.27	18.9

B. SINGLE PROCESS SECTION ACROSS LINES (214 Gg capacity)

Process Section	Control Costs, $/Mg[a]	Uncontrolled Emission Rates	
		kg VOC/Mg Product[b]	Mg/yr[c]
Material Recovery	1,000	0.11	22.4
	2,000	0.06	11.1
	3,000	0.04	7.4
Product Finishing	1,000	0.33	70
	2,000	0.15	32.1
	3,000	0.10	21.1

[a] Based on 98 percent reduction in the uncontrolled emission rate.

[b] Emission rates have been rounded up to the nearest one-hundreth.

[c] Equivalent uncontrolled annual emissions (Mg/yr) calculated by multiplying the unrounded emission rate (kg VOC/Mg product) times production capacity (i.e., 71.3 Gg or 214 Gg).

Table 4-3. UNCONTROLLED EMISSION RATES VERSUS COST EFFECTIVENESS FOR POLYSTYRENE PLANTS BASED ON MODEL PLANT PARAMETERS, BY PROCESS SECTION

A. SINGLE PROCESS SECTION WITHIN A SINGLE LINE (36.75 Gg)

Process Section	Control Costs, $/Mg[a]	Uncontrolled Emission Rates	
		kg VOC/Mg Product[b]	Mg/yr[c]
Material Recovery[d]	1,000	0.45	16.4
	2,000	0.29	10.7
	3,000	0.19	7.1
Material Recovery[e]	1,000	0.26	9.3
	2,000	0.21	7.5
	3,000	0.18	6.7

B. SINGLE PROCESS SECTION ACROSS LINES (73.5 Gg)

Process Section	Control Costs, $/Mg[a]	Uncontrolled Emission Rates	
		kg VOC/Mg Product[b]	Mg/yr[c]
Material Recovery[d]	1,000	0.20	14.6
	2,000	0.17	12.5
	3,000	0.16	11.5
Material Recovery[e]	1,000	0.19	13.7
	2,000	0.17	11.9
	3,000	0.15	11.1

[a] Based on the emission reduction associated with going from the uncontrolled emission rate down to the RACT level of 0.12 kg VOC/Mg of product.

[b] Emission rates have been rounded up to the nearest one-hundreth.

[c] Equivalent uncontrolled annual emissions (Mg/yr) calculated by multiplying the unrounded emission rate (kg VOC/Mg product) times production capacity (i.e., 36.75 Gg or 73.5 Gg).

[d] Styrene in air.

[e] Styrene in steam.

design and operating conditions that, based upon available data, ensure 98 percent VOC destruction, the feasibility of emission testing, and the acceptability of existing units.

A recent comprehensive flare emissions testing program conducted jointly by EPA and the Chemical Manufacturers Association has demonstrated that the following conditions ensure 98 weight percent VOC destruction: smokeless operation (no visible emissions except for periods of 5 minutes or less during a 2-hour period); the presence of a flame; a net heating value of 300 Btu/scf or greater if the flare is steam-assisted or air-assisted or of 200 Btu/scf or greater if the flare is non-assisted, and an exit velocity of 60 fps or less if steam-assisted or non-assisted or less than $[8.706 + 0.7084 (H_T)]$ fps, where H_T is the net heating value, if the flare is air-assisted. Operating conditions other than those above have not been investigated and there is no assurance that VOC destruction efficiencies of 98 percent or greater would be achieved. The high cost makes it impractical to test a flare. Therefore, a State may accept new and existing flares as RACT provided the flares are operated smokelessly, with a flame, with minimum heat contents (Btu/scf) as outlined above, and with maximum exit velocities as outlined above; except that existing flares do not need to meet the maximum exit velocity guidelines when major structural changes, such as flare tip replacement, are required to meet the maximum exit velocity recommended for the particular flare.

For thermal incinerators, a control efficiency of 98 percent VOC destruction or reduction to 20 ppm VOC, whichever is less stringent, is considered to be achievable by all new incinerators considering available technology, cost, and energy usage. This determination is based on considering incinerator operating conditions of 870°C (1600°F), a residence time of 0.75 seconds, and adjustment of the incinerator after start-up. As stated in Chapter 3, operating conditions other than those noted above may still result in 98 percent emission reduction. Thus, some existing incinerators designed and operated at lower combustion temperatures and residence times may perform as well; others may not. An emission test of an incinerator is technically and economically feasible. Therefore, a State may require emission tests and, based on

the results and an analysis of cost effectiveness, require modifications to improve efficiency or even replacement of an existing incinerator.

Catalytic incinerators can be designed and operated to achieve 98 percent destruction; however, general parameters to assure performance can not be specified because the required parameters vary with the characteristics of the waste stream. The performance of catalytic incinerators can be tested at reasonable cost. Therefore, as with thermal incinerators, a State may require an emission test, modification, or replacement of an existing catalytic incinerator.

Boilers and process heaters used for VOC reduction must have the VOC vent stream introduced into the flame zone of the boiler or process heater to assure high combustion efficiency. Boilers and process heaters with a design heat input capacity of 150 million Btu/hour or greater are generally operated at temperatures and residence times greater than 1095°C (2,000°F) and 1 second, respectively. Thus, the probability of very high VOC reduction efficiency (i.e., 98 percent or a VOC reduction to 20 ppm) is a near certainty. The achievement of 98 percent destruction efficiency for boilers and process heaters with design heat input capacities less than 150 million Btu/hour is not so certain. Since performance tests can be conducted at reasonable cost, however, a State may require testing and, based on a cost effectiveness analysis, subsequent modification or even replacement to improve combustion performance.

Other control techniques, such as those utilizing condensation, absorption and adsorption, can be designed and operated to achieve a 98 weight percent VOC reduction. Any techniques that achieve the same degree of control should be considered equivalent to and acceptable as RACT.

The 0.12 kg VOC/1,000 kg of product emission limit for polystyrene continuous processes is based on the use of condensers. This level is in agreement with the current emission factors reported by the Chemical Manufacturers Association. The use of process changes or other control techniques that achieve the same degree of control should be considered equivalent to and acceptable as RACT.

Although many existing plants are expected to be achieving RACT already, these control technique guidelines establish uniform, reasonably available state-of-the-art control for existing plants in all non-attainment

areas nationwide and provide information regarding VOC emissions and their control in polypropylene liquid phase processes, high-density polyethylene liquid phase slurry processes, and polystyrene continuous processes.

Control techniques guidelines and RACT are not established in this document for other polymer processes, such as polypropylene gas phase processes, polyethylene gas phase processes, and high-density polyethylene liquid phase solution processes. Emissions and control of these processes were not analyzed because of the relatively small number of existing plants. EPA may subsequently analyze and establish control technique guidelines for any or all of such other processes. In the meantime, a State may choose to conduct its own model plant or case-by-case analysis and establish its own guidelines.

4.2 AIR POLLUTION

The annual quantities of volatile organic compounds (VOC) from the model plants before and after control by RACT are presented in Table 4-4. The stream from each model plant represents a combination of continuous emission streams from process vents excluding fugitives and raw material and product storage facilities. The range of expected reductions in VOC emissions, achieved as a result of implementation of RACT for the model plants, is shown in Table 4-4.

The VOC destroyed or recovered as a result of the application of RACT consists mainly of ethylene, propylene, styrene, and certain organic diluents. These gases are known to react in the atmosphere with oxides of nitrogen to form oxidants, principally ozone. Reduction of emissions of these gases will contribute to the attainment of the national ambient air quality standard (NAAQS) for ozone.

A flare is expected to be the major control device used as RACT for polypropylene liquid phase processes and polyethylene liquid phase slurry processes. A properly designed combustion device would lead to minimal formation and subsequent emission of carbon monoxide. The amount of NO_x products formed by flaring or by incineration at 870°C (1,600 °F) is negligible. Thus, there should be minimal generation of secondary air pollutants by combustion techniques.

Table 4-4. MODEL PLANT ENVIRONMENTAL ANALYSIS BASED ON RECOMMENDATIONS FOR RACT

Polymer	Process Section	Model Plant Uncontrolled VOC Emission Rate, Mg/yr[a]		Model Plant Existing VOC Emission Rate, Mg/yr [a]		Projected Control Device(s)	Projected Control Efficiency	Model Plant Controlled VOC Emission Rate, Mg/yr	
		All Streams	RACT Streams	All Streams	RACT Streams			All Streams	RACT Streams
Polypropylene	RMP	10	0	10	0	Flare,		10	0
	PR	574	574	57.4	57.4	Incinerator,	98%	11.5	11.5
	MR	4,224	4,224	422.4	422.4	or Boiler		84.5	84.5
	PF[b]	367	367	367	367			7.3	7.3
TOTAL PLANT		5,175	5,165	857	847			113	103
High-Density Polyethylene	RMP	43	0	4	0	Flare,		4	0
	MR	2,718	2,718	272	272	Incinerator,	98%	54.4	54.4
	PF[c]	87	87	87	87	or Boiler		1.7	1.7
TOTAL PLANT		2,847	2,805	363	359			60	56
Polystyrene	MR[d] (styrene in air)	8.8	8.8	8.8	8.8		-	8.8	8.8
	MR[e] (styrene in steam)	227	227	227	227	Condenser	96.1[f]	8.8	8.8
	PF	11	0	11	0			11	0
TOTAL PLANT - styrene in air		19.8	8.8	19.8	8.8			19.8	8.8
- styrene in steam		238	227	238	227			19.8	8.8

[a] Based on 90 percent assumed existing control efficiency applied to the following streams: for polypropylene, streams B, C, D, E, and F; for high-density polyethylene, streams A and D.

[b] Including stream G, dryer vent, at 0.6 kg VOC/1,000 kg product.

[c] Including stream B, dryer vent, at 0.4 kg VOC/1,000 kg product.

[d] Including stream B, devolatilizer condenser vent, at 0.06 kg VOC/1,000 kg product and stream C, styrene recovery unit condenser vent, at 0.06 kg VOC/1,000 kg product.

[e] Including stream B, devolatilizer condenser vent, at 2.96 kg VOC/1,000 kg product and stream C, styrene recovery unit condenser vent, at 0.13 kg VOC/1,000 kg product.

[f] For a reduction from upper end of range of emission factors (as noted in footnote e) totaling 3.09 kg VOC/1,000 kg for RACT streams to 0.12 kg VOC/1,000 kg product.

A condenser is expected to be the major control device used as RACT for polystyrene continuous processes. There should be no generation of secondary air pollutants by condensation.

4.3 WATER POLLUTION

Combustion systems do not generate an effluent water stream. (Boilers do generate an effluent water stream during blowdown, but combustion of VOC generates neither additional effluent nor changes in effluent characteristics.) The condensers for each polystyrene model plant could require as much as 38,000 gallons of make-up water (at a cost of about $12 per year). Most of the condenser water losses, however, would be expected to be by evaporation rather than by discharge.

4.4 SOLID WASTE DISPOSAL

Generation of solid wastes is not an expected result of control by RACT in any model plant under consideration. Relatively small amounts of used catalyst would be generated if a catalytic incinerator were used to separately control some of the low VOC streams.

4.5 ENERGY

Tables 4-5, 4-6, and 4-7 present the additional amount and type of energy required after control within each model plant by RACT. The control techniques analyzed for RACT are flares, thermal incinerators, and catalytic incinerators for polypropylene and high-density polyethylene and condensers for polystyrene. These control techniques require steam, natural gas, and electricity. Total estimated energy consumption is presented for each application in equivalent barrels of distillate oil and total cost.

For a flare, steam is generally used to ensure smokeless combustion. Natural gas is used for pilot flames to assure ignition and subsequent combustion of the waste gas. The combined streams from the liquid-phase processes of both polypropylene and high-density polyethylene production have high enough heat contents that no supplemental fuel is required. In addition, for this same reason, no supplemental fuel is required for the control of emissions from individual process sections for those process sections controlled by a flare. As the flow rate of the flares

Table 4-5. ADDITIONAL ENERGY REQUIREMENTS FOR CONTROL WITH RACT IN POLYPROPYLENE PLANTS

Control Scenario	Process Section[a]	Control Device	Annual Steam Consumption		Annual Natural Gas Consumption		Annual Electricity Consumption		Total Energy Consumption	
			1,000 lb/yr	$/yr	1,000 scf/yr[b]	$/yr	kWh/yr	$/yr	bbl oil/yr[c]	$/yr
Total Plant	All	Thermal Incinerator	-	-	2.9	20	93,000	4,500	140	4,500
		Flare	4,560	28,200	700	4,300	-	-	1,240	32,500
Process Section Within Line	PR	Flare	170	1,050	700	4,300	-	-	160	5,400
	MR	Flare	1,230	7,600	700	4,300	-	-	420	11,900
	PF	Thermal Incinerator	-	-	230	1,400	1,240	105	40	1,500
Process Section Across Lines	PR	Flare	510	3,130	700	4,300	-	-	240	7,400
	MR	Flare	3,690	22,800	700	4,300	-	-	1,030	27,100
	PF	Thermal Incinerator	-	-	690	4,200	6,330	310	120	4,500

[a] PR = polymerization reaction; MR = material recovery; PF = product finishing.

[b] Standard cubic feet (scf) at 60°F.

[c] Equivalent barrels of distillate oil required considering energy conversion efficiencies:

steam:	1000lb	= 1.525 GJ
natural gas:	10^6Btu	= 1.0551 GJ and 1040 But(HHV)/scf at 60°F
electricity:	1 kWh	= 9.476×10^{-3} GJ
oil:	1 GJ	= 0.1628 bbl oil

Table 4-6. ADDITIONAL ENERGY REQUIRED FOR CONTROL WITH RACT IN HIGH-DENSITY POLYETHYLENE PLANTS

Control Scenario	Process Section[a]	Control Device	Annual Steam Consumption		Annual Natural Gas Consumption		Annual Electricity Consumption		Total Energy Consumption	
			1,000 lb/yr	$/yr	1,000 scf/yr[b]	$/yr	kWh/yr	$/yr	bbl oil/yr[c]	$/yr
Total Plant	All	Thermal Incinerator	-	-	-	-	70,520	3,500	110	3,500
		Flare	3,080	19,000	700	4,300	-	-	870	23,300
Process Section Within Line	MR	Flare	1,010	6,200	700	4,300	-	-	370	10,500
	PF	Catalytic Incinerator	-	-	-	-	4,080	200	4,080	200
Process Section Across Lines	MR	Flare	3,030	18,700	700	4,300	-	-	870	23,000
	PF	Catalytic Incinerator	-	-	210	1,310	12,040	590	52	1,900

[a] MR = material recovery; PF = product finishing.

[b] Standard cubic feet (scf) at 60°F.

[c] Equivalent barrels of distillate oil required considering energy conversion efficiencies:

steam:	1000 lb	= 1.525 GJ
natural gas:	10^6 Btu	= 1.0551 GJ and 1040 But(HHV)/scf at 60°F
electricity:	1 kWh	= 9.476×10^{-3} GJ
oil:	1 GJ	= 0.1628 bbl oil

Table 4-7. ADDITIONAL ENERGY REQUIRED FOR CONTROL WITH RACT IN POLYSTYRENE PLANTS

Control Scenario	Process Section[a]	Control Device	Annual Steam Consumption 1,000 lb/yr	Annual Steam Consumption $/yr	Annual Natural Gas Consumption 1,000 scf/yr[b]	Annual Natural Gas Consumption $/yr	Annual Electricity Consumption kWh/yr	Annual Electricity Consumption $/yr	Total Energy Consumption bbl oil/yr[c]	Total Energy Consumption $/yr
Total Plant	MR[d]		-	-	-	-	285,900	14,000	440	14,000
							(11,630)	(570)	(18)	(570)
	MR[e]	Condenser	-	-	-	-	2,900	140	5	140
Process Section Within Line	MR[d]		-	-	-	-	104,500	5,120	160	5,120
							(11,330)	(555)	(17)	(555)
	MR[e]	Condenser	-	-	-	-	2,900	140	5	140
Process Section Across Lines	MR[d]	Condenser	(same as "Total Plant")							
	MR[e]									

[a] MR = material recovery.

[b] Standard cubic feet (scf) at 60°F.

[c] Equivalent barrels of distillate oil required considering energy conversion efficiencies:

steam:	1000 lb	= 1.525 GJ
natural gas:	10^6 Btu	= 1.0551 GJ and 1040 But(HHV)/scf at 60°F
electricity:	1 kWh	= 9.476×10^{-3} GJ
oil:	1 GJ	= 0.1628 bbl oil

[d] Styrene in air at 3.09 kg VOC/Mg of product (numbers in parantheses are at 0.2 kg VOC/Mg of product).

[e] Styrene in steam. Numbers are applicable for both 3.09 kg VOC/Mg of product and 0.2 kg VOC/Mg of product.

would be largely, if not entirely, continuous, no natural gas will be required as a purge.

For an incinerator, no fuel is required for flame stability or combustion since the streams encountered in these polymer industries are rich enough to sustain stable self-combustion. Electricity cost projected is only for fan operation. Instrumentation is assumed to consume a negligible amount of electricity. If natural gas were used as a supplemental fuel, the possibility of fuel switching (gas to coal) is remote for an incinerator.

For a condenser, electricity is required to pump the cooling liquid. Electricity may also be required to operate the refrigeration system of a refrigerated condenser. A condenser has no other energy requirements.

5.0 CONTROL COST ANALYSIS OF RACT

This chapter presents assumptions, procedures, and results of the analysis to estimate the costs of controlling volatile organic compounds (VOC) emissions from the polymers and resins industry. The results are estimates of capital costs, annualized costs, and costs of emission reductions, for a range of existing control levels. The following sections present outlines of the bases for estimating control costs for flares, thermal incinerators, catalytic incinerators, and condensers (more detailed procedures are given in Appendix E) and the results of the cost analyses for each model plant.

5.1 BASES OF COST ANALYSES

The cost analysis consists of two steps for each control system: designing a system that will reliably maintain the desired efficiency and estimating capital and operating costs for such a system. Designing a control system for process VOC emissions requires an analysis of the waste gas characteristics of the combined stream to each control device specified for a model plant. The various streams for each model plant were assumed to have the same compositions assumed for the new source performance standard cost analysis.[1] The stream characteristics along with mass and energy balances are the basis for determining the equipment sizes, operating parameters, and operating requirements (e.g., fuel).

Once these control system parameters have been determined, then the capital and annual costs can be calculated. The capital cost estimates for each control device and model plant combination include purchase and installation of the control or monitoring devices and piping systems necessary for proper control of continuous process VOC emissions from each model plant.

All process VOC control capital costs are converted to June 1980 dollars using the plant cost indices published in the Chemical Engineering Economic Indicators. The installed capital costs for process controls represent the total investment, including indirect costs such as engineering and contractors' fees and overhead, required for purchase and installation of all equipment and materials for the control systems. These are

battery-limit costs and do not include any provisions for bringing utilities, services, or roads to the site, or for any backup facilities, land, research and development required, or for any process piping and instrumentation interconnections that may be required within the process generating the waste gas. Since RACT will affect existing plants, the control equipment installation factors include cost adjustments for retrofit installations. Typical cost adjustments for control equipment installations given in the GARD Manual[2] are presented in Table 5-1. The installation factors and retrofit cost adjustments assumed for the various process control devices are presented in Table 5-2. Actual direct and indirect cost factors depend upon the plant specific conditions and may vary with the size of the system. The annualized costs consist of the direct operating and maintenance costs, including labor, utilities, fuel, and materials for the control system, and indirect costs for overhead, taxes, insurance, administration, and the capital recovery charges. The utilities considered include natural gas and electricity. The annualized cost factors that are used to analyze all of the process VOC control systems are summarized in Table 5-3.

The following sections outline the design and costing procedures developed for flares, thermal incinerators, catalytic incinerators, and condensers. Details of these procedures are given in Appendix E. This section presents an overview of the procedures and their important features. The results of the cost analyses for the various control device and model plant combinations are also presented.

5.1.1 Thermal Incinerator Design and Cost Basis

For costing purposes thermal incinerator designs were based on heat and mass balances for combustion of the waste gas and any required auxiliary fuel, considering requirements of total combustion air. Associated piping, ducting, fans, and stacks were also costed.

5.1.1.1 Thermal Incineration Design. Designs of thermal incineration systems for the various combinations of waste gas streams were developed using a procedure based on heat and mass balances and the characteristics of the waste gas in conjunction with some engineering design assumptions. For the purpose of the cost analyses in this report, thermal incinerators were designed to maintain a 0.75 second residence time at 870°C (1600°F).[3] The design procedure is outlined in this section.

Table 5-1. COST ADJUSTMENTS[2]

	Cost Adjustment
A. Instrumentation:	
1. Simple, continuous manually operated	0.5 to 1.0
2. Intermittent operation, modulating flow with emissions monitoring instrumentation	1.0 to 1.5
3. Hazardous operation with explosive gases and safety backups	3
B. Freight:	
1. Major metropolitan areas in continental U.S.	0.2 to 1.0
2. Remote areas in continental U.S.	1.5
3. Alaska, Hawaii, and foreign	2
C. Handling and Erection:	
1. Assembly included in delivered cost with supports, base, skides included. Small to moderate size equipment	0.2 to 0.5
2. Equipment supplied in modules, compact area site with ducts and piping less than 200 ft in length. Moderate size system	1
3. Large system, scattered equipment with long runs. Equipment requires fabrication at site with extensive welding and erection	1 to 1.5
4. Retrofit of existing system; includes removal of existing equipment and renovation of site. Moderate to large system	2
D. Site Preparation:	
1. Within battery limits of existing plant; includes minimum effort to clear, grub, and level	0
2. Outside battery limits; extensive leveling and removal of existing structures; includes land survey and study	1
3. Requires extensive excavation and land ballast and leveling. May require dewatering and pilings	2

	Cost Adjustment
E. Facilities & Buildings:	
1. Outdoor units, utilities at site	0
2. Outdoor units with some weather enclosures. Requires utilities brought to site, access roads, fencing, and minimum lighting	1
3. Requires building with heating and cooling, sanitation facilities, with shops and office. May include railroad sidings, truck depot, with parking area	2
F. Engineering & Supervision:	
1. Small capacity standard equipment, duplication of typical system, turnkey quote	0.5
2. Custom equipment, automated controls	1 to 2
3. New process or prototype equipment, large system	3
G. Construction & Field Expenses:	
1. Small capacity systems	.1
2. Medium capacity systems	1
3. Large capacity systems	1.5
H. Construction Fee:	
1. Turnkey project, erection, and installation included in equipment cost	.5
2. Single contractor for total installation	1
3. Multiple contractors with A&E firm's supervision	2
I. Contingency:	
1. Firm process	1
2. Prototype or experimental process subject to change	3 to 5
3. Guarantee of efficiencies and operating specifications requiring initial pilot tests, deferment of payment until final certification of EPA tests, penalty for failure to meet completion date or efficiency	5 to 10

Table 5-2. INSTALLATION COST FACTORS

Installation Cost Component	Thermal Incinerator			Flare			Catalytic Incinerator		
	Typical	Retrofit Multiplier[a]	Adjusted	Typical	Retrofit Multiplier[a]	Adjusted	Typical	Retrofit Multiplier[a]	Adjusted
Major Equipment Purchase Price (P)	1.0		1.0	1.0		1.0	1.0		1.0
Unspecified Equipment	0.2		0.2	0.0		0.0	0.0		0.0
Total Equipment (A)	1.2		1.2	1.0		1.0	1.0		1.0
Installation Factors (Multiples of A)									
Foundations	0.10		0.10	0.06		0.06	0.03		
Structures	0.03		0.03	0.01		0.01	--		
Equipment Erection	0.26	x 2 =	0.52	0.15	x 2 =	0.30	0.05	x 2 =	0.10
Piping	0.34		0.34	0.20		0.20	0.10		
Insulation	0.10		0.10	--		--	--		
Paint	0.09		0.09	0.02		0.02	0.01		
Fire Protection	0.02		0.02	--		--	0.01		
Instruments	0.26		0.26	0.05		0.05	0.15		
Electrical	0.09		0.09	0.05		0.05	0.05		
Sales Tax	0.08		0.08	0.06		0.06	0.06		
Freight	0.16		0.16	0.10		0.10	0.08		
Contractor's Fee	0.39	x 2 =	0.78	0.16	x 2 =	0.32	0.12	x 2 =	0.24
Engineering	0.25	x 2 =	0.50	0.09	x 2 =	0.18	0.08	x 2 =	0.16
Contingencies	0.17	x 2 =	0.34	0.15	x 2 =	0.30	0.08	x 2 =	0.16
Total	3.33A 4.00P		4.41A 5.29P	2.10A 2.10P		2.65A 2.65P	1.82A 1.82P		2.15A 2.15P

[a]Retrofit multipliers based on cost adjustments given in Table 5-1, taken from Reference 2.

Table 5-2. INSTALLATION COST FACTORS (Concluded)

Installation Cost Component	Condenser (20ft^2) Typical	Retrofit Multiplier[a]	Adjusted	Condenser (130ft^2) Typical	Retrofit Multiplier[a]	Adjusted
Major Equipment Purchase Price (P)	1.0		1.0	1.0		1.0
Unspecified Equipment	0.0		0.0	0.0		0.0
Total Equipment (A)	1.0		1.0	1.0		1.0
Installation Factors (Multiples of A)						
Foundations	--		--	0.03		0.03
Structures	--		--	--		--
Equipment Erection	0.02	x 2 =	0.04	0.10	x 2 =	0.20
Piping	0.10		0.10	0.20		0.20
Insulation	0.04		0.04	0.06		0.06
Paint	0.01		0.01	0.02		0.02
Fire Protection	--		--	--		--
Instruments	--		--	0.10		0.10
Electrical	--		--	0.05		0.05
Sales Tax	0.05		0.05	0.06		0.06
Freight	0.06		0.06	0.08		0.08
Contractor's Fee	0.05	x 2 =	0.10	0.17	x 2 =	0.34
Engineering	0.03	x 2 =	0.06	0.09	x 2 =	0.18
Contingencies	0.03	x 2 =	0.06	0.13	x 2 =	0.26
Total	1.39A 1.39P		1.48A 1.48P	2.09A 2.09P		2.58A 2.58P

[a]Retrofit multipliers based on cost adjustments given in Table 5-1, taken from Reference 2.

Table 5-3. ANNUALIZED COST FACTORS FOR POLYMERS AND RESINS CTG
(June 1980 Dollars)

Direct Cost Factors

Operating labor price: $18/hr (including overhead)[a]

Operating labor requirements (including supervisory labor):

= 1200 labor hours/yr for thermal incinerator without heat recovery[b]

= 620 labor hours/yr for flare[c]

= 60 labor hours/yr for condenser[d]

= 620 labor hours/yr for catalytic incinerator without heat recovery[c]

Electricity price: $0.049/kwh[e]

Natural gas price: $5.67/GJ ($5.98/MMBtu)[f]

Steam price: $13.62/Mg ($6.18/1000 lb)[g]

Water price: $0.079/$m^3$ ($0.30/1000 gal)[h]

Styrene recovery credit: $0.788/kg ($0.357/lb)[i]

Indirect Cost Factors

Interest rates:

10 percent (in the absence of taxes)

Equipment life, N:[j]

15 years for flare
10 years for thermal incinerator, catalytic incinerator, condenser, piping

Capital recovery charge factor = $\frac{i(1 + i)^N}{(1 + i)^N - 1}$

= 0.131 for flare

= 0.163 for thermal incinerator, catalytic incinerator, condenser, piping

Taxes, insurance, and administration: 0.04 x Total installed capital cost[k]

Maintenance cost: 0.05 x Total installed capital cost[l]

Operating hours: 8000 hours/yr

FOOTNOTES FOR Table 5-3

[a] Includes wages plus 40 percent for labor-related administrative and overhead costs.

[b] Blackburn, J.W. Control Device Evaluation: Thermal Oxidation, Report No. 1 in Organic Chemical Manufacturing, Volume 4. U.S. Environmental Protection Agency. Research Triangle Park, N.C. Publication No. EPA-450/3-80-026. December 1980.

[c] 0.5 man-hours/shift x 8600 hrs/yr ÷ 8 hrs/shift + 15 percent of the operating labor for supervisory costs.

[d] 1 man-hour/week x 8600 hrs/yr ÷ 8 hrs/shift ÷ 21 shifts/week + 15 percent of operating labor for supervisory costs.

[e] Memo from Chasko and Porter, EPA, September 17, 1980. Guidance for developing CTGD Cost Chapters.

[f] Memo from Al Wehe, to Information Analysis Working Group for the Industrial Boiler Working Group. April 23, 1981. IFCAM Modification:

Projected 1985 price in 1978 dollars is $4.91 + $.60 delivery charge per MMBtu.

Projected 1990 price in 1978 dollars is $5.55 + $0.61 delivery charge per MMBtu.

By linear interpolation between $4.91 and $5.55/MMBtu; 1988 price in 1978 dollars = $5.29/MMBtu.

Using GNP implicit price deflator index: 4th quarter 1978 of 154.99 and 2nd quarter 1980 of 175.28; 1988 price in 1980 dollars = 175.28/154.99 x 5.29 = $5.98/MMBtu.

Assumed higher heating value of 1040 Btu/scf at 16°C(60°F).

[g] Neverill, R.B. Capital and Operating Costs of Selected Air Pollution Control Systems. U.S. Environmental Protection Agency. Research Triangle Park, N.C. Publication No. EPA-450/5-80-002. December 1978. p. 3-12:

$5.04/1000 lb steam, 4th quarter 1977.

Using GNP implicit price deflator index: 4th quarter 1977 of 142.91 and 2nd quarter 1980 of 175.28; updated steam price = 175.28/142.91 x $5.04 = $6.18/1000 lb steam.

[h] Peters, M.S. and K.D. Timmerhaus. Plant Design and Economics for Chemical Engineers. McGraw-Hill Book Co. New York, N.Y. Third Edition. 1980. p. 881.

[i] 90 percent of styrene price given in Chemical Marketing Reporter.

FOOTNOTES FOR Table 5-3 (Concluded)

[j] Average equipment lives given by Neverill in reference cited in g., p. 3-16.

[k] Fugitive Emission Sources of Organic Compounds -- Additional Information on Emissions, Emission Reductions, and Costs. U.S. Environmental Protection Agency. Research Triangle Park, N.C. Publication No. EPA-450/3-82-010. April 1982. p. 5-16.

[l] Per reference cited in footnote k:

9 percent of total installed capital costs for maintenance and miscellaneous charges - 4 percent of total installed capital costs for taxes, insurance and administration (equivalent to miscellaneous).

In order to prevent an explosion hazard and satisfy insurance requirements, dilution air was added to any individual or combined waste stream with both a lower heating value between 13 and 50 Btu/scf at 0°C (32°F) (about 25 and 100 percent of the lower explosive limit) and an oxygen concentration of 12 percent or greater by volume. Dilution air was added to reduce the lower heating value of the stream to below 13 Btu/scf. (Adding dilution air is a more conservative assumption than the alternative of adding natural gas and is probably more realistic as other streams often have enough heat content to sustain the combustion of the combined stream.)

The combustion products were then calculated assuming 18 percent excess air for required combustion air, but 0 percent excess air for oxygen in the waste gas, i.e., oxygen thoroughly mixed with VOC in waste gas. The procedure includes a calculation of auxiliary fuel requirements for streams (usually with heating values less than 60 Btu/scf) unable to achieve stable combustion at 870°C (1600°F) or greater. Natural gas was assumed as the auxiliary fuel as it was noted by vendors as the primary fuel now being used by industry. Natural gas requirements were calculated using a heat and mass balance assuming a 10 percent heat loss in the incinerator. Minimum auxiliary fuel requirements for low heating value streams were set at 5 Btu/scf to ensure flame stability.[4]

For streams able to maintain combustion at 870°C (1600°F), fuel was added for flame stability in amounts that provided as much as 13 percent of the lower heating value of the waste gas for streams with heating values of 650 Btu/scf or less. For streams containing more than 650 Btu/scf, flame stability fuel requirements were assumed to be zero since coke oven gas, which sustains a stable flame, contains only about 590 Btu/scf. In order to prevent damage to incinerator construction materials, quench air was added to reduce the combustion temperature to below the incinerator design temperature of 980°C (1800°F) for the cost curve given by IT Enviroscience.[5]

The total flue gas was then calculated by summing the products of combustion of the waste gas and natural gas along with the dilution air. The required combustion chamber volume was then calculated for a residence time of 0.75 sec, conservatively oversizing by 5 percent according to standard industry practice.[6] The design procedure assumed a minimum

commercially available size of 1.01 m^3 (35.7 ft^3) based on vendor information[7] and a maximum shop-assembled unit size of 205 m^3 (7,238 ft^3).[8]

The design procedure would allow for pretreating of combustion air, natural gas, and when permitted by insurance guidelines, waste gas using a recuperative heat exchanger in order to reduce the natural gas required to maintain a 870°C (1600°F) combustion temperature. However, all streams to thermal incinerators costed for these polymers and resins had sufficient waste gas heating values to combust at 870°C (1600°F) without preheating the input streams. If a plant had a use for it, heat could be recovered. (In fact, a waste heat boiler can be used to generate steam, generally with a net cost savings.)

5.1.1.2 Thermal Incinerator Costing. Thermal incinerator purchase costs were taken directly from the IT Enviroscience graph for the calculated combustion chamber volume.[5] (Essentially equivalent purchase costs would be obtained by using data from the GARD manual.[2]) A retrofit installation cost factor of 5.29 was used based on the Enviroscience document (see Table 5-2).[9]

The installed cost of one 150-ft. duct to the incinerator and its associated fan and stack were also taken directly from the IT Enviroscience study.[10] A minimum cost of $70,000 (December 1979 dollars) was assumed for waste gas streams with flows below 500 scfm. The costs of piping or ducting from the process sources to the 150-ft. duct costed above were estimated for 70 feet long "source legs."[11] For flows less than 700 scfm, an economic pipe diameter was calculated based on an equation in the Chemical Engineer's Handbook[12] and simplified as suggested by Chontos.[13,14,15] The next larger size (inner diameter) of schedule 40 pipe was selected unless the calculated size was within 10 percent of the size interval between the next smaller and next larger standard sizes. For flows of 700 scfm and greater, duct sizes were calculated assuming a velocity of 2,000 fpm for flows of 60,000 acfm or less and 5,000 fpm for flows greater than 60,000 acfm. Duct sizes that were multiples of 3-inches were used. (See Section E.6 for detailed design and cost procedures for piping and ducting.)

Piping costs were based on those given in the Richardson Engineering Services Rapid Construction Estimating Cost System[16] as combined for 70 ft. source legs and 500 ft. and 2,000 ft. pipelines for the cost

analysis of the Distillation NSPS.[17] Ducting costs were calculated based on the installed cost equations given in the GARD Manual.[18]

Installed costs were put on a June 1980 basis using the following Chemical Engineering Plant Cost Indices: the overall index for thermal incinerators; the pipes, valves, and fittings index for piping; and the fabricated equipment index for ducts, fans, and stacks. Annualized costs were calculated using the factors in Table 5-3. The electricity required was calculated assuming a 6-inch H_2O pressure drop across the system and a blower efficiency of 60 percent.

5.1.2 Flare Design and Cost Basis

Elevated steam-assisted flares were costed based upon 60 fps and 300 Btu/scf and standard design techniques. Associated piping and ducting from the process sources to a header and from a header to the flare were conservatively designed for costing purposes. Operating costs for utilities were based on industry practice.

5.1.2.1 Flare Design. Design of flare systems for the combinations of waste streams was based on standard flare design equations for diameter and height presented by IT Enviroscience.[19] These equations were simplified to functions of the following waste gas characteristics: volumetric flow rate, lower heating value, temperature, and molecular weight. A minimum commercially available diameter of 2 inches was assumed. The height correlation premise is design of a flare that will not generate a lethal radiative heat level (1500 Btu/ft^2 hr, including solar radiation[20]) at the base of the flare (considering the effect of wind). Heights in 5-foot multiples with a minimum of 30 ft. were used.[21]

Supplemental fuel, natural gas, is added to increase the heating value to 300 Btu/scf to help ensure 98 percent VOC destruction. For flares with diameters of 24-inches or less, this natural gas was assumed to be premixed with the waste gas and to exit out the stack. For larger flares, a gas ring at the flare tip was assumed because such separate piping is more economical than increasing the flare stack size for large diameter.

Purge gas also may be required to prevent air intrusion and flashback. A purge velocity requirement of 1 fps was assumed during

periods of continuous flow for standard systems without seals.[22] No purge gas is needed for either model plant under consideration.

Natural gas consumption at a rate of 80 scfh per pilot flame to ensure ignition and combustion was assumed. The number of pilots was based on diameter according to available commercial equipment.[23]

Steam was added to produce smokeless combustion through a combined mixing and quenching effect. A steam ring at the flare tip was used to add steam at a rate of 0.4 lb steam/lb of hydrocarbons (VOC plus methane and ethane) in the continuous stream.[24] Availability and deliverability of this quantity of steam was assumed.

Piping (for flows less than 700 scfm) or ducting (for flows equal to or greater than 700 scfm) was designed from the process sources to a header combining the streams (via "source legs") and from the header to the base of the flare (via "pipelines"). Since it is usual industry practice, adequate pressure (approximately 3 to 4 psig) was assumed available to transport all waste gas streams without use of a compressor or fan. The source legs were assumed to be 70 feet in length,[11] while the length of pipelines to the flare was based on the horizontal distance required to provide the safe radiation level for continuous working (440 Btu/hr-ft^2, including solar radiation[23]). The sizes of piping and ducting were estimated as for thermal incinerators (see Appendix E-6).

5.1.2.2 Flare Costing. Flare purchase costs were based on costs for diameters from 2 to 24 inches and heights from 20 to 200 feet provided by National AirOil Burner, Inc., (NAO) during November 1982.[23] These costs are October 1982 prices of self-supporting flares without ladders and platforms for heights of 40 feet and less and of guyed flares with ladders and platforms for heights of 50 feet and greater. Flare purchase costs were estimated by either choosing the value provided for the required height and diameter or using two correlations developed from the NAO data for purchase cost as a function of height and diameter. (One correlation for heights of 40 feet and less and one for heights of 50 feet and greater). A retrofit installation factor of 2.65 (see Table 5-2) was used to estimate installed flare costs.

Installed piping and ducting costs were estimated as noted for thermal incinerators (see Appendix E.6). Installed costs were put on a June 1980 basis using the following Chemical Engineering Plant Cost Indices: the overall index for flares; the pipes, valves, and fittings index for piping; and the fabricated equipment index for ducting. Annualized costs were calculated using the factors presented in Table 5-3.

5.1.3 Catalytic Incinerator Design and Cost Basis

Catalytic incinerators are generally cost effective VOC control devices for low concentration streams. The catalyst increases the chemical rate of oxidation allowing the reaction to proceed at a lower energy level (temperature) and thus requiring a smaller oxidation chamber, less expensive materials, and much less auxiliary fuel (especially for low concentration streams) than required by a thermal incinerator. The primary determinant of catalytic incinerator capital cost is volumetric flow rate. Annual operating costs are dependent on emission rates, molecular weights, VOC concentration, and temperature. Catalytic incineration in conjunction with a recuperative heat exchanger can reduce overall fuel requirements.

5.1.3.1 Catalytic Incinerator Design. The basic equipment components of a catalytic incinerator include a blower, burner, mixing chamber, catalyst bed, an optional heat exchanger, stack, controls, instrumentation, and control panels. The burner is used to preheat the gas to catalyst temperature. There is essentially no fume retention requirement. The preheat temperature is determined by the VOC content of the combined waste gas and combustion air, the VOC destruction efficiency, and the type and amount of catalyst required. A sufficient amount of air must be available in the gas or be supplied to the preheater for VOC combustion. (All the gas streams for which catalytic incinerator control system costs were developed are dilute enough in air and therefore require no additional combustion air.) The VOC components contained in the gas streams include ethylene, n-hexane, and other easily oxidizable components. These VOC components have catalytic ignition temperatures below 315°C (600°F). The catalyst bed outlet temperature is determined by gas VOC content. Catalysts can be operated up to a temperature of 700°C (1,300°F). However, continuous use of the catalyst at this high temperature may cause accelerated thermal aging due to recrystallization.

The catalyst bed size required depends upon the type of catalyst used and the VOC destruction efficiency desired. Heat exchanger requirements are determined by gas inlet temperature and preheater temperature. A minimum practical heat exchanger efficiency is about 30 percent; a maximum of 65 percent was assumed for this analysis. Gas temperature, preheater temperature, gas dew point temperature, and gas VOC content determine the maximum feasible heat exchanger efficiency. A stack is used to vent the flue gas to the atmosphere.

Fuel gas requirements were calculated based on the heat required for a preheat temperature of 315°C (600°F), plus 10 percent for auxiliary fuel. The fuel was assumed to be natural gas, although oil (No. 1 or 2) can be used. Electricity demand was based on pressure drops of 4 inches water for systems without heat recovery and 10 inches water for systems with heat recovery, a conversion rate of 0.0001575 hp/in. water, 65 percent motor efficiency, and 10 percent additional electricity required for instrumentation, controls, and miscellaneous. A catalyst requirement of 2.25 ft^3/1,000 scfm was assumed for 98 percent efficiency.[25] Catalyst replacement every three years was assumed.

5.1.3.2 Catalytic Incinerator Costing. Calculations for capital cost estimates were based on equipment purchase costs obtained from vendors for all basic components and the application of direct and indirect cost factors.[25,26,27] Purchase cost equations were developed based on vendor third quarter 1982 purchase costs of catalyst incinerator systems with and without heat exchangers for sizes from 1,000 scfm to 50,000 scfm. The cost data are based on carbon steel material for incinerator systems and stainless steel for heat exchangers. Catalytic incinerator systems of gas volumes higher than 50,000 scfm can be estimated by considering two equal volume units in the system. A minimum available unit size of 500 scfm was assumed[28,29]; the installed cost of this minimum size unit, which can be used without addition of gas or air for stream flows greater than about 150 scfm[29], was estimated to be $53,000 (June 1980). Heat exchangers for small size systems are costly and may not be practical. The direct and indirect cost component factors used for estimating capital costs of catalytic incinerator systems with no heat exchangers and for heat exchangers were presented in Table 5-2. Installed costs of piping, ducts, fans, and stacks were

estimated by the same procedure as for thermal incinerators. Installed costs were put on a June 1980 basis using the following Chemical Engineering Plant Cost indicies: the overall index for catalytic incinerators; the pipes, valves, and fittings index for piping; and the fabricated equipment index for ducts, fans, and stacks. Annualized costs were calculated using the factors in Table 5-3.

5.1.4 Condenser Design and Cost Basis

This section outlines the procedures used for sizing and estimating the costs of surface condenser systems applied to the gaseous streams from the continuous process polystyrene model plant. Existing polystyrene processes may emit either styrene in steam or styrene in air, depending on the type of vacuum system used. Styrene in steam is more readily condensed than styrene in air and is thus less costly to control. Design and costing were performed for both styrene-in-steam and styrene-in-air emissions. For styrene in steam, a condensation system was designed that would reduce styrene emissions from 3.09 kg/1,000 kg product and from 0.20 kg VOC/1,000 kg of product to 0.12 kg VOC/1,000 kg of product. Although polystyrene processes that emit styrene in air are expected to have emissions already around 0.12 kg/1,000 kg of product, an analysis was performed to design a condensation system that reduced styrene emissions in air from 3.09 kg VOC/1,000 kg product and 0.20 kg VOC/1,000 kg of product to 0.12 kg/1,000 kg of product. For both design analyses, styrene emissions were assumed to be saturated in steam (or in air) at 27°C(80°F).

5.1.4.1 Surface Condenser Design. The condenser system evaluated consists of a shell and tube heat exchanger with the hot fluid in the shell side and the cold fluid in the tube side. The condenser system, which condenses the vapors by isothermal condensation, is sized based on the total heat load and the overall heat transfer coefficient which is established from individual heat transfer coefficients of the gas stream and the coolant.

Total heat load was calculated using the following procedure: the system condensation temperature was determined from the total pressure of the gas and vapor pressure data for styrene and steam (and styrene in air). As the vapor pressure data are not readily available, the condensation temperature was estimated by trial-and-error for styrene in

steam and by a regression analysis of available data points[30] for styrene in air using the Clausius Clapeyron equation which relates the stream pressures to the temperatures. The total pressure of the stream is equal to the vapor pressures of individual components at the condensation temperature. Once the condensation temperature was known, the total heat load of the condenser was determined from the latent heat contents of styrene and steam and, for styrene in air, from the latent heat content of the condensed styrene and the sensible heat changes of styrene and air. The coolant is selected based on the condensation temperature.

For styrene in steam, no detailed calculations were made to determine the individual and overall heat transfer coefficients. Since the streams under consideration contain low amounts of styrene, the overall heat transfer coefficient was estimated based on published data for steam. For styrene in air, the styrene-in-air refrigerated condenser systems were designed according to procedures for calculating shell side[31] and tube side[32] heat transfer coefficients and according to condenser[33] and refrigerant[34,35] characteristics given primarily in the Chemical Engineers' Handbook and consistent with the 8-ft. long condenser with 1-inch outside diameter tubes assumed by Enviroscience[36] for cost estimation purposes. Then the total heat transfer area was calculated from the known values of total heat loads and overall heat transfer coefficient using Fourier's general equation.

5.1.4.2 Surface Condenser Costing. For styrene in steam, the heat exchanger costs for each stream were obtained from vendors.[37,38,39] For styrene in air, condensation system costs were based on IT Enviroscience[40] as well as vendor information. An installation factor of 1.48 (See Table 5-2) was used to estimate installed condenser costs for condensers of 20 ft^2 or less and 2.58 for condensers 125 ft^2 or greater. No additional piping was costed for condensers with 20 ft^2 or less heat transfer area because the condenser unit is so small (~1-2 ft. diameter) that it should be able to be installed adjacent to the source.

5.2 EMISSION CONTROL COSTS

This section presents the cost estimates of RACT emission control for each of the model plants. Tables 5-4, 5-5, and 5-6 summarize the model plant parameters used in the cost analysis and gives the emission

Table 5-4. POLYPROPYLENE MODEL PLANT PARAMETERS AND EMISSION CONTROL COSTS

Parameter	Total Plant[a]	Process Section[b] PR	MR	PF
Production Capacity (Gg/yr)	141 47[c]			
VOC Concentration, wt. %	63.3	100	100	9.3
Gas Flowrate, acfm	397	26	147	222
Gas Temperature, °F	108	129	133	85
Flow Time, hr/yr	8,000	8,000	8,000	8,000
Uncontrolled Emission Factor, kg VOC/Mg Product	36.6[d]	4.07	30	2.6
Total Uncontrolled VOC Emissions, Mg/yr	5,165	574	4,224	367
Total Existing VOC Emissions, Mg/yr[e]	847	57	422	367
Projected Control Device[f]	TI, F	F	F	TI
Assumed VOC Reduction Efficiency, %	98	98	98	98
Controlled VOC Emissions, Mg/yr	103	12	85	7
Installed Capital Cost, $	635,900 (TI) 90,600 (F)	27,200 (F)[g] 21,500 (F)[h]	64,200 (F)[g] 31,100 (F)[h]	414,100[g] 377,500[h]
Annualized Cost, $/yr	186,700 (TI) 65,700 (F)	25,000 (F)[g] 21,400 (F)[h]	53,800 (F)[g] 30,400 (F)[h]	130,800[g] 118,500[h]

[a] Excludes emissions from raw material preparation.

[b] Parameters are provided on a process section across lines basis and represent initial stream conditions from the sources.

[c] Assumed plant has 3 process lines, each at 47 Gg/yr production capacity.

[d] Including stream G, dryer vent, at 0.6 kg VOC/Mg product.

[e] Based on assumed 90 percent control of selected streams (given in Table 4-4, footnote a).

[f] TI = thermal incinerator; F = flare; CI = catalytic incinerator.

[g] Costs for emission control across lines (i.e., at 141 Gg capacity).

[h] Costs for emission control within a single line (i.e., at 47 Gg capacity).

Table 5-5. HIGH-DENSITY POLYETHYLENE MODEL PLANT PARAMETERS AND EMISSION CONTROL COSTS

Parameter	Total Plant[a]	Process Section[b] MR	PF
Production Capacity (Gg/yr)	214 71.3[c]		
VOC Concentration, wt. %	25.6	99	0.7
Gas Flowrate, acfm	912	209	703
Gas Temperature, °F	70	70	70
Flow Time, hr/yr	8,000	8,000	8,000
Uncontrolled Emission Factor, kg VOC/Mg Product	13.1	12.7	0.406
Total Uncontrolled VOC Emissions, Mg/yr	2,805	2,718	87
Total Existing VOC Emissions, Mg/yr	359	272	87
Projected Control Device[d]	TI or F	F	CI
Assumed VOC Reduction Efficiency, %	98	98	98
Controlled VOC Emissions, Mg/yr	56	54	2
Installed Capital Cost, $	557,400 (TI) 54,500 (F)	57,300 (F)[e] 30,900 (F)[f]	201,600 (CI)[e] 149,900 (CI)[f]
Annualized Cost, $	166,000 (TI) 47,400 (F)	47,960 (F)[e] 28,900 (F)[f]	71,600 (CI)[e] 56,200 (CI)[f]

[a] Excludes emissions from raw material preparation.

[b] Parameters are provided on a process section across lines basis and represent initial stream conditions from the sources.

[c] Assumed plant has 3 process lines, each at 71.3 Gg/yr.

[d] TI = thermal incinerator; F = flare; CI = catalytic incinerator.

[e] Costs for emission control across lines (i.e., at 214 Gg capacity).

[f] Costs for emission control within a single line (i.e., at 71.3 Gg capacity).

Table 5-6. POLYSTYRENE MODEL PLANT PARAMETERS AND EMISSION CONTROL COSTS

Parameter	Styrene in Steam		Styrene in Air	
	Total Plant[a]	Process Section[b] MR	Total Plant[a]	Process Section[b] MR
Production Capacity (Gg/yr)	73.5 36.75[c]		73.5 36.75[c]	
VOC Concentration, wt. %	15.5[d]	15.5[d]	1[d]	1[d]
Gas Flowrate, acfm	99.5	49.8	14	7
Gas Temperature, °F	210	210	80.6	80.6
Flow Time, hr/yr	8,000	8,000	8,000	8,000
Uncontrolled Emission Factor, kg VOC/Mg Product	3.09	3.09	0.2	0.2
Total Uncontrolled VOC Emissions, Mg/yr	227	114	14.7	7.4
Total Existing VOC Emissions, Mg/yr	227	114	14.7	7.4
Projected Control Device	Condenser	Condenser	Condenser	Condenser
Assumed VOC Reduction Efficiency[e], %	96.1	96.1	40	40
Controlled VOC Emissions, Mg/yr	8.8	4.4	8.8	4.4
Installed Capital Cost, $	28,000	28,000	32,300	32,300
Annualized Cost[f], $	-146,700	-69,200	5,660	7,735

[a] Excludes emissions from raw material storage (stream A) and product finishing (Stream D).

[b] Parameters are provided on a per process line basis and represent initial stream conditions from the sources.

[c] Assumed plant has 2 process lines, each at 36.75 Gg/yr.

[d] Weight % of total mass of stream.

[e] From uncontrolled emission rate to 0.12 kg VOC/Mg product.

[f] Includes styrene recovery credit.

reductions from uncontrolled to RACT levels and the installed capital costs and annualized costs of achieving RACT for the three polymers. The specific assumptions and breakdowns of capital and annual costs and recovery credits, where appropriate, are given for each model plant in the following sections.

Three cost analyses were performed for each polymer. These analyses were made in order to reflect various control costs and emission reductions associated with applying RACT at plants that have different existing levels of control. The actual costs and emission reductions will depend upon the actual existing control level, stream characteristics, potential stream combination, and potential utilization of existing control devices.

The first cost estimate is based on combining all continuous streams that were judged to be reasonable to control and delivering the combined stream to a single control device. Since the reduced cost of piping will generally not offset the increased cost of multiple control equipment units, the use of a single control device for a plant is usually the lower cost option open to a plant.

The second cost estimate is based on combining all continuous streams from one type of process section in a plant and delivering the combined stream to a single control device. This analysis reflects, for example, a potential situation in which a plant may be controlling all other emissions except those from product finishing and in order to control product finishing emissions a new control device is required.

The third cost estimate is, in a sense, a subset of the second cost estimate where a plant may be controlling, for example, product finishing emissions from some of the lines. This estimate reflects a "worst case" scenario in which a new control device is required to control the emissions from a single process section (e.g., product finishing) in a single process line.

5.2.1 Polypropylene (PP)

The first cost estimate was developed for 98 percent VOC destruction by both thermal incinerators and flare control of the combined continuous emission streams from the liquid-phase polypropylene process. The cost analysis is based on a fluidized bed dryer with emissions of 0.6 kg VOC/1000 kg of product. (Some other dryers are potentially larger

emitters, while other dryers, e.g., those using recycled nitrogen, are extremely small emitters.) The dryer emissions were further diluted with air to prevent a potential explosive hazard. The combined emission stream from polypropylene plants is very rich in VOC so that quench dilution air must be added in the incinerator combustion chamber to keep the combustion chamber temperature below the limit for the construction materials of 980°C (1800°F). (Alternatively, the combined stream is often diluted with nitrogen - about 10-30 volume percent of the total diluted stream - to keep the lower heating value in the desired range of 1000-1100 Btu/scf. This nitrogen-diluted stream has characteristics similar to those of natural gas and, thus, can be used readily in boilers as a fuel supplement.) Similarly, no auxiliary fuel is required for flaring.

Table 5-7 summarizes the results of the cost analysis for the polypropylene model plant. Breakdowns of capital and operating costs are presented for both thermal incinerator and flare systems. The use of a boiler to control VOC emissions was not costed because boiler availability and operating practice are both site-specific; however, costs for this control option basically consist of piping costs which would be negligible when compared with the expected energy credit. The total installed capital cost of RACT is $635,800 for a thermal incinerator system and $90,600 for a flare system. The annualized cost is $186,700 per year for an incinerator system and $65,700 per year for a flare.

The second cost estimate was developed based on controlling emissions separately from each process section across process lines in a model plant. The third cost estimate was developed based on controlling emissions separately from each process section within a process line. Tables 5-8 and 5-9 summarize the results of these two additional cost analyses.

5.2.2 High-Density Polyethylene (HDPE)

The first cost estimate for thermal incinerators and flares achieving 98 percent destruction of VOC emissions from the high-density polyethylene model plant was based on one stream combining the three continuous emission streams: ethylene recycle treaters, dryer, and continuous mixer vents. An air-fluidized dryer with emissions of 0.4 kg VOC/1000 kg of product was assumed. As noted for the polypropylene model plant,

Table 5-7. COST ANALYSIS FOR POLYPROPYLENE MODEL PLANT

Item	Thermal Incinerator			Flare	
	Combustion Chamber	Source Legs	Duct, Fan & Stacks	Flare	Manifold
Installed Cost, $					
-Purchased Equipment	94,200			9,800	
-Installation	404,300			16,100	
Total Installed	498,500	58,400	79,000	25,900	64,700
Annualized Cost, $/yr					
Direct					
-Operating Labor	21,600	--	--	11,200	--
-Maintenance	24,900	2,900	4,000	1,300	3,200
-Natural Gas	20	--	--	4,300	--
-Electricity	4,500	--	--	--	--
-Steam	--	--	--	28,200	--
Subtotal	51,000	2,900	4,000	45,000	3,200
Indirect					
-Capital Recovery	81,100	9,500	12,800	3,400	10,500
-Tax, Insurance & Administration	19,900	2,300	3,200	1,000	2,600
Subtotal	101,000	11,800	16,000	4,400	13,100
Total	152,000	14,700	20,000	49,400	16,300

Table 5-8. COST ANALYSIS FOR POLYPROPYLENE PROCESS SECTIONS ACROSS PROCESS LINES

Item	Polymerization Reaction		Material Recovery		Product Finishing		
						Thermal Incinerator	
	Flare	Manifolding	Flare	Manifolding	Combustion Chamber	Source Legs	Duct, Fan, & Stacks
Installed Cost, $							
-Purchased Equipment	6,000		7,900		54,400		
-Installation	9,800		13,100		233,600		
Total Installed	15,800	11,400	21,000	43,200	288,000	48,200	77,900
Annualized Cost, $/yr							
Direct							
-Operating Labor		11,160		11,160		21,600	
-Maintenance		1,360		3,210		20,700	
-Natural Gas		4,280		4,280		4,220	
-Electricity		0		0		310	
-Steam		3,130		22,800		0	
Subtotal		19,930		41,450		46,800	
Indirect							
-Capital Recovery		3,940		9,790		67,400	
-Tax, Insurance & Administration		1,090		2,570		16,600	
Subtotal		5,030		12,360		84,000	
Total		25,000		53,800		130,800	

Table 5-9. COST ANALYSIS FOR POLYPROPYLENE PROCESS SECTIONS WITHIN A PROCESS LINE

Item	Polymerization Reaction		Material Recovery		Product Finishing		
						Thermal Incinerator	
	Flare	Manifolding	Flare	Manifolding	Combustion Chamber	Source Legs	Duct, Fan, & Stacks
Installed Cost, $							
-Purchased Equipment	6,000		6,000		54,400		
-Installation	9,800		9,800		233,600		
Total Installed	15,800	5,620	15,800	15,300	288,000	15,000	74,500
Annualized Cost, $/yr							
Direct							
-Operating Labor	11,160		11,160			21,600	
-Maintenance	1,070		1,560			18,900	
-Natural Gas	4,280		4,280			1,410	
-Electricity	0		0			100	
-Steam	1,050		7,600			0	
Subtotal	17,560		24,600			42,000	
Indirect							
-Capital Recovery	3,000		4,570			61,400	
-Tax, Insurance & Administration	860		1,240			15,100	
Subtotal	3,860		5,810			76,500	
Total	21,400		30,400			118,500	

other dryers may have higher or lower emissions. The combined stream characteristics were calculated based on the individual stream characteristics and compositions given in Table 2-6 and an assumed composition of 0.7 percent isobutane in air (thus requiring no further dilution to reduce the lower heating value to below 25 percent of the lower explosive limit in order to prevent an explosion hazard). Because of the substantial VOC content of the combined waste gas stream, quench air is required to reduce the combustion temperature of the incinerator and no auxiliary natural gas is required for flaring.

Table 5-10 summarizes the results of the cost analysis for the high-density polyethylene model plant. Breakdowns of capital and operating costs are presented for both thermal incinerators and flare systems. The total installed capital cost estimated for RACT is $557,400 for a thermal incinerator system and $54,500 for a flare system. The annualized RACT cost estimates are $166,000 for a thermal incinerator and $47,400 for a flare system. As was done for the polypropylene model plant, two additional cost analyses were undertaken. The results of these two analyses are summarized in Table 5-11.

5.2.3 Polystyrene (PS)

Costs of achieving RACT for polystyrene continuous processes were estimated based on further condensation of VOC emitted from the two vents from the system recovering unreacted styrene monomer: the styrene condenser vent and the styrene recovery unit condenser vent. The extruder quench vent, the other stream within the scope of this CTG, contains only a trace of styrene in steam and was not considered for control under RACT. The styrene emissions from the two streams were combined and cooled to reduce gaseous emissions to 0.12 kg VOC/1000 kg of product. Current industry control is in a transitional period in which vacuum pumps are replacing steam eductors to produce the required vacuum. This transition is taking place because of cost incentives to recover styrene as vacuum pumps result in lower emissions of styrene to the atmosphere. Both an "uncontrolled" emission level of 3.09 kg VOC/1000 kg of product and an already relatively well-controlled emission level of 0.20 kg VOC/1000 kg of product were examined in the cost basis. The higher level is based on one plant that is already in the process of reducing emissions to

Table 5-10. COST ANALYSIS FOR HIGH DENSITY POLYETHYLENE MODEL PLANT

Item	Thermal Incinerator			Flare	
	Combustion Chamber	Source Legs	Duct, Fan & Stacks	Flare	Manifold
Installed Cost, $					
-Purchased Equipment	85,300			9,800	
-Installation	365,900			16,100	
Total Installed	451,200	21,100	85,100	25,900	28,600
Annualized Cost, $/yr					
Direct					
-Operating Labor	21,600	--	--	11,200	--
-Maintenance	22,600	1,100	4,200	1,300	1,400
-Natural Gas	--	--	--	4,300	--
-Electricity	3,500	--	--	--	--
-Steam	--	--	--	19,000	--
Subtotal	47,700	1,100	4,200	35,800	1,400
Indirect					
-Capital Recovery	73,400	3,400	13,900	3,400	4,700
-Tax, Insurance & Administration	18,100	800	3,400	1,000	1,100
Subtotal	91,500	4,200	17,300	4,400	5,800
Total	139,200	5,300	21,500	40,200	7,200

Table 5-11. COST ANALYSIS FOR HIGH DENSITY POLYETHYLENE PROCESS SECTIONS

Item	Across Process Lines					Within Process Lines				
	Material Recovery		Product Finishing Catalytic Incinerator			Material Recovery		Product Finishing Catalytic Incinerator		
	Flare	Manifolding	Combustion Chamber	Source Legs	Duct, Fan & Stacks	Flare	Manifolding	Combustion Chamber	Source Legs	Duct, Fan & Stacks
Installed Cost, $										
-Purchase Equipment	7,900		37,000			7,060		29,100		
-Installation	13,100		40,300			11,640		31,700		
Total Installed	21,000	36,300	77,300	43,700	80,650	18,700	12,200	60,900	14,600	74,400
Annualized Cost, $/yr										
Direct										
-Operating Labor	11,160			16,700		11,160			16,700	
-Maintenance	2,665			10,100		1,550			7,500	
-Natural Gas	4,280			1,310		4,280			0	
-Electricity	0			590		0			200	
-Steam	18,700			2,040[a]		6,230			1,350[a]	
Subtotal	37,000			30,700		23,220			25,800	
Indirect										
-Capital Recovery	8,670			32,800		4,440			24,400	
-Tax, Insurance & Administration	2,290			8,070		1,240			6,000	
Subtotal	10,960			40,900		5,680			30,400	
Total	47,950			71,600		28,900			56,200	

[a] Catalyst requirement.

below the 0.12 kg VOC/1000 kg of product level (through the use of vacuum pumps) because of economic incentives. The 0.20 kg VOC/1000 kg of product VOC level is based on the plant that currently has the greatest known emissions. Both emission levels were costed for styrene-in-steam emissions as well as for styrene-in-air emissions.

Both of the units examined for recovery of styrene in steam require only a minimum commercially available size condenser unit with 20 ft^2 heat transfer area. Therefore, as shown in Table 5-12, the only difference in the costs of the two units is the amount of the recovery credit. The total installed capital cost and annualized cost of both units are $28,000 and $8,300 per year, respectively. The net annualized costs considering recovery credit are $-147,000 per year for a reduction from 3.09 kg/1000 kg and $4,130 per year for a reduction from 0.20 kg/1000 kg.

For the recovery of styrene in air, a minimum commercially available size condenser unit with 20 ft^2 heat transfer area is required when the uncontrolled emission rate is 0.2 kg VOC/Mg of product. If the uncontrolled emission rate is 3.09 kg VOC/Mg of product, then a condenser with 185 ft^2 heat transfer area is required to remove the styrene from the styrene-in-air emissions.

Only one additional cost analysis was undertaken for the polystyrene plant because the model plant consists of only two process lines and only one process section for which RACT is being recommended. The additional cost analysis looks at controlling emissions from a single process line. The results of this cost analysis are summarized in Table 5-13.

5.3 COST EFFECTIVENESS OF RACT

The annualized cost effectiveness values (net annualized cost per megagram of VOC emission reduction) are given in Tables 5-14, 5-15, and 5-16 for the various control techniques and model plant combinations. The estimated costs of emission reduction (using the lowest cost combustion control option of flares for PP and HDPE) are only $13 and $17 per megagram of VOC reduced from uncontrolled levels, for polypropylene and high-density polyethylene, respectively. Even for a reduction from the assumed upper level of existing control for which additional or replacement control might be required, the cost of the same control techniques would be about $88 and $160, per megagram. For the polystyrene model plant, the condenser analysis results in a range in the potential cost

Table 5-12. COST ANALYSIS FOR POLYSTYRENE MODEL PLANT

Item	Styrene in Steam	Styrene in Air	
		0.2 kg VOC per Mg product	3.09 kg VOC per Mg product
Installed Cost, $			
-Purchased Equipment	11,300[a]	13,000[a]	41,300[a]
-Installation	16,700[a]	19,300[a]	65,200[a]
Total Installed	28,000[b]	32,300[b]	136,000[c]
Annualized Cost, $/yr			
Direct			
-Operating Labor	1,080	1,080	15,770
-Maintenance	1,400	1,620	6,800
-Natural Gas	--	-	-
-Electricity	140	570	14,000
-Steam	5	15[d]	65[d]
Subtotal	2,630	3,290	36,600
Indirect			
-Capital Recovery	4,550	5,260	22,130
-Tax, Insurance & Administration	1,120	1,290	5,440
Subtotal	5,670	6,550	27,570
Recovery Credit	155,000[e] (4,170)[f]	4,170	155,000
Total (Direct + Indirect - Recovery Credit)	-146,700[e] (4,130)[f]	5,660	-90,800

[a] Includes only condenser and refrigeration unit costs.

[b] Condenser only 1-2 ft in diameter so no piping, etc. beyond that in installation cost considered necessary.

[c] Includes $29,500 for piping.

[d] Cost is for make-up coolant.

[e] From uncontrolled emission rate of 3.09 kg VOC/Mg product.

[f] From uncontrolled emission rate of 0.2 kg VOC/Mg product.

Table 5-13. COST ANALYSIS FOR POLYSTYRENE PROCESS SECTIONS WITHIN A PROCESS LINE

Item	Material Recovery		
	Styrene in Steam	Styrene in Air	
		0.2 kg VOC per Mg product	3.09 kg VOC per Mg product
Installed Cost, $			
-Purchased Equipment	11,300[a]	13,000[a]	30,900[a]
-Installation	16,700[a]	19,300[a]	48,800[a]
Total Installed	28,000[b]	32,300[b]	94,450[c]
Annualized Cost, $/yr			
Direct			
-Operating Labor	1,080	1,080	15,770
-Maintenance	1,400	1,620	4,720
-Natural Gas	--	--	--
-Electricity	140	555	5,120
-Steam	5	15[d]	65[d]
Subtotal	2,630	3,270	25,680
Indirect			
-Capital Recovery	4,550	5,260	15,370
-Tax, Insurance & Administration	1,120	1,290	3,780
Subtotal	5,670	6,550	19,150
Recovery Credit	77,500[e] (2,090)[f]	2,085	77,485
Total (Direct + Indirect - Recovery Credit)	-69,200[e] (6,210)[f]	7,735	-32,660

[a] Includes only condenser and refrigeration unit costs.

[b] condenser only 1-2 ft in diameter so no piping, etc. beyond that in installation cost considered necessary.

[c] Includes $14,740 for piping.

[d] Cost is for make-up coolants.

[e] From uncontrolled emission rate of 3.09 kg VOC/Mg product.

[f] From uncontrolled emission rate of 0.2 kg VOC/Mg product.

Table 5-14. COST EFFECTIVENESS OF RACT APPLIED TO CONTINUOUS STREAMS IN THE POLYMERS AND RESINS INDUSTRY, BY MODEL PLANT

Polymer	Projected Control Device	VOC Reduction, Mg/yr		Annualized Cost, $/yr	Cost Effectiveness, $/Mg VOC Reduced	
		From Uncontrolled	From Existing Control[a]		From Uncontrolled	From Existing Control[a]
Polypropylene[b]	Thermal Incinerator	5,061	744	186,700	37	250
	Flare	5,061	744	65,700	13	88
High-Density Polyethylene[b]	Thermal Incinerator	2,748	303	166,000	60	550
	Flare	2,748	303	47,400	17	160
Polystyrene	Condenser (styrene in steam)	218[c]	218	-146,700	-670	-670
		5.9[d]	5.9	4,130	700	700
	Condenser (styrene in air)	218[c]	218	-90,800	-415	-415
		5.9[d]	5.9	5,660	960	960

[a] Based on assumed 90 percent existing control of selected streams (given in Table 4-4, footnote a) for PP and HDPE and 0.20 kg VOC/Mg for PS in order to estimate an upper end of the potential cost effectiveness range.

[b] Boilers can also be used to achieve 98 percent VOC reduction efficiency.

[c] From uncontrolled emission rate of 3.09 kg VOC/Mg product.

[d] From uncontrolled emission rate of 0.2 kg VOC/Mg product.

Table 5-15. COST EFFECTIVENESS OF RACT APPLIED TO CONTINUOUS STREAMS IN THE POLYMERS AND RESINS INDUSTRY, BY PROCESS SECTION ACROSS LINES

Polymer	Process Section[a]	Projected Control Device	VOC Reduction, Mg/yr		Annualized Cost, $/yr	Cost Effectiveness, $/Mg VOC Reduced	
			From Uncontrolled	From Existing Control		From Uncontrolled	From Existing Control
Polypropylene	PR	Flare	563	46	25,000	44	545
	MR	Flare	4,140	338	53,800	13	160
	PF	Thermal Incinerator	360	360	130,800	365	365
High-Density Polyethylene	MR	Flare	2,663	266	47,960	18	180
	PF	Catalytic Incinerator	85	85	71,600	840	840
Polystyrene	(Same as in Table 5-14)						

[a] PR = polymerization reaction; MR = material recovery; PF = product finishing.

Table 5-16. COST EFFECTIVENESS OF RACT APPLIED TO CONTINUOUS STREAMS IN THE POLYMERS AND RESINS INDUSTRY, BY PROCESS SECTION WITHIN A PROCESS LINE

Polymer	Process Section[a]	Projected Control Device	VOC Reduction, Mg/yr		Annualized Cost, $/yr	Cost Effectiveness, $/Mg VOC Reduced	
			From Uncontrolled	From Existing Control		From Uncontrolled	From Existing Control
Polypropylene	PR	Flare	187	15	21,400	114	1,430
	MR	Flare	1,382	113	30,400	22	270
	PF	Thermal Incinerator	120	120	118,500	990	990
High-Density Polyethylene	MR	Flare	887	89	28,900	31	313
	PF	Catalytic Incinerator	28	28	56,200	1,975	1,975
Polystyrene	MR (styrene in steam)	Condenser	110[b] 2.96[c]	110 2.96	-69,200 6,210	-630 2,100	-630 2,100
	MR (styrene in air)	Condenser	110[b] 2.94[c]	110 2.94	-32,660 7,735	-297 2,630	-297 2,630

[a] PR = polymerization reaction; MR = material recovery; PF = product finishing.

[b] From uncontrolled emission rate of 3.09 kg VOC/Mg product.

[c] From uncontrolled emission rate of 0.2 kg VOC/Mg product.

effectiveness of polystyrene control from a credit of $-670/Mg (for styrene in steam reduced from 3.09 kg/Mg) to a cost of $960/Mg (styrene in air reduced from 0.20 kg/Mg).

5.4 REFERENCES FOR CHAPTER 5

1. Polymer Manufacturing Industry - Background Information for Proposed Standards. U.S. Environmental Protection Agency, Research Triangle Park, North Carolina. Draft EIS. September 1983.

2. Neverill, R.B. Capital and Operating Costs of Selected Air Pollution Control Systems. U.S. Environmental Protection Agency. Research Triangle Park, N.C. Publication No. EPA-450/5-80-002. December 1978. p. 3-7 and 3-8.

3. Memo from Mascone, D.C., EPA, to Farmer, J.R., EPA. June 11, 1980. Thermal incinerator performance for NSPS.

4. Blackburn, J.W. Control Device Evaluation: Thermal Oxidation. In: Chemical Manufacturing Volume 4: Combustion Control Devices. U.S. Environmental Protection Agency, Research Triangle Park, N.C. Publication No. EPA-450/3-80-026, December 1980. Fig III-2, p. III-8.

5. Reference 4, Fig. A-1, p. A-3

6. Air Oxidation Processes in Synthetic Organic Chemical Manufacturing Industry - Background Information for Proposed Standards. U.S. Environmental Protection Agency, Research Triangle Park, N.C. Draft EIS. August 1981. p. 8-9.

7. EEA. Distillation NSPS Thermal Incinerator Costing Computer Program (DSINCIN). May 1981. p. 4.

8. Reference 4, p. I-2.

9. Reference 6, p. G-3 and G-4.

10. Reference 4, Fig. V-15, curve 3, p. V-18.

11. Memo from Senyk, David, EEA, to EB/S Files. September 17, 1981. Piping and compressor cost and annualized cost parameters used in the determination of compliance costs for the EB/S industry.

12. Perry, R.H. and C.H. Chilton, eds. Chemical Engineers' Handbook, fifth edition. New York, McGraw-Hill Book Company. 1973. p. 5-31.

13. Chontos, L.W. Find Economic Pipe Diameter via Improved Formula. Chemical Engineering. 87(12):139-142. June 16, 1980.

14. Memo from Desai, Tarun, EEA, to EB/S Files. March 16, 1982. Procedure to estimate piping costs.

15. Memo from Kawecki, Tom, EEA, to SOCMI Distillation File. November 13, 1981. Distillation pipeline costing model documentation.

16. Richardson Engineering Services. Process Plant Construction Cost Estimating Standards, 1980-1981. 1980.

17 EEA. Distillation NSPS Pipeline Costing Computer Program (DMPIPE), 1981.

18. Reference 2, Section 4.2, p. 4-15 through 4-28.

19. Kalcevic, V. Control Device Evaluation: Flares and the Use of Emissions as Fuels. In: Organic Chemical Manufacturing Volume 4: Combustion Control Devices. U.S. Environmental Protection Agency. Research Triangle Park, N.C. Publication No. EPA-450/3-80-026. December 1980.

20. Reference 19, p. IV-4.

21. Memo from Sarausa, A.I., Energy and Environmental Analysis, Inc. (EEA), to Polymers and Resins File. May 12, 1982. Flare costing program (FLACOS).

22. Telecon. Siebert Paul, PES, with Keller, Mike, John Zink, Co. August 13, 1982. Clarification of comments on draft polymers and resins CTG document.

23. Telecon. Siebert, Paul, PES with Fowler, Ed, NAO. November 5, 1982. Purchase costs and operating requirements of elevated flares.

24. Telecon. Siebert, Paul, PES with Fowler, Ed, NAO. November 17, 1982. Purchase costs and operating requirements of elevated flares.

25. Telecon. Katari, Vishnu, Pacific Environmental Services, Inc. with Tucker, Larry, Met-Pro Systems Division. October 19, 1982. Catalytic incinerator system cost estimates.

26. Telecon. Katari, Vishnu, Pacific Environmental Services, Inc., with Kroehling, John, DuPont, Torvex Catalytic Reactor Company. October 19, 1982. Catalytic incinerator systsem cost estimates.

27. Letter from Kroehling, John, DuPont, Torvex Catalytic Reactor Company, to Katari, V., PES. October 19, 182. Catalytic incinerator system cost estimates.

28. Key, J.A. Control Device Evaluation: Catalytic Oxidation. In: Chemical Manufacturing Volume 4: Combustion Control Devices. U.S. Environmental Protection Agency, Research Triangle Park, N.C. Publication No. EPA-450/3-80-026. December 1980.

29. Telecon. Siebert, Paul, Pacific Environmental Services, Inc., with Kenson, Robert, Met-Pro Corporation, Systems Division. July 22, 1983. Miminum size catalytic incinerator units.

30. Reference 12, p. 3-59.

31. Reference 12, pp. 10-25 through 10-28.

32. Reference 12, pp. 10-12 through 10-15.

33. Reference 12, pp. 11-1 through 11-18.

34. Reference 12, pp. 3-191, 3-212 through 3-214, and 12-46 through 12-48.

35. Weast, R.C., ed. Handbook of Chemistry and Physics, fifty-third edition. Cleveland, The Chemical Rubber Company. 1972. p. E-26.

36. Erikson, D.G. Control Device Evaluation: Condensation. In: Organic Chemical Manufacturing Volume 5: Adsorption, Condensation, and Absorption Devices. U.S. Environmental Protection Agency, Research Triangle Park, N.C. Publication No. EPA-450/3-80-027. December 1980. p. A-3.

37. Telecon. Katari, Vishnu, Pacific Environmental Services, Inc., with Mr. Ruck, Graham Company. September 29, 1982. Heat exchanger system cost estimates.

38. Telecon. Katari, Vishnu, Pacific Environmental Services, Inc., with Clower, Dove, Adams Brothers, a representative of Graham Company. September 30, 1982. Heat exchanger system cost estimates.

39. Telecon. Katari, Vishnu, Pacific Environmental Services, Inc., with Mahan, Randy, Brown Fintube Company. October 7, 1982. Heat exchanger system cost estimates.

40. Reference 36, pp. A-4 and A-5.

APPENDIX A

LIST OF COMMENTERS

APPENDIX A
LIST OF COMMENTERS[a]

Comment No.	Comment Date	Commenter
1	June 16, 1982	Monsanto Company (W.G. Bir and C.D. Malloch)
2	June 18, 1982	Texas Chemical Council (A.H. Nickolaus)
3	June 21, 1982	Chemical Manufacturers Association (Geraldine V. Cox)
4	June 21, 1982	Gulf Oil Chemicals Company (J.R. Strausser)
5	July 19, 1982	Polysar Inc., Resins Division (F.J. Mitrano)
6		DuPont (G. Madden)

[a]Only comments on the May 1982 draft CTG document are included.

APPENDIX B

COMMENTS ON

MAY 1982 DRAFT

CTG DOCUMENT

Monsanto

Monsanto Company
800 N. Lindbergh Boulevard
St. Louis, Missouri 63166
Phone: (314) 694-1000

Mail Zone G3WG

June 16, 1982

Chemicals & Petroleum Branch (MD-13)
Emission Standard & Engineering Division
U.S. Environmental Protection Agency
Research Triangle Park, North Carolina 27711

IN DUPLICATE

ATTENTION: Mr. Jack R. Farmer

RE: COMMENTS ON EPA'S DRAFT CTG ENTITLED CONTROL OF VOLATILE ORGANIC COMPOUND EMISSIONS FROM MANUFACTURE OF HIGH-DENSITY POLYETHYLENE, POLYPROPLENE, POLYSTYRENE RESINS, MAY 1982

Dear Mr. Farmer:

Monsanto has reviewed the subject draft CTG and submits the following comments on it. Monsanto is a major manufacturer of polystyrene and as such, the issues discussed below will only address this one product.

- Polystyrene VOC Emissions are Insignificant

  Monsanto plants experience much lower emission factors than shown on page 2-21, figure 2-3 of the draft CTG. Monsanto's emission factors for its existing operations do not exceed those shown in the CMA comments on the EPA model plant emission factors for polymers/resins manufacture submitted to EPA on October 19, 1981 (see attached). A comparison of the data is:

	Kg VOC/1000 Kg resin	
	DRAFT CTG	CMA COMMENTS
Tankage (A)	0.11	0.01 - 0.02
Styrene Condenser Vent (B)	2.96	0.05 - 0.06
Styrene Recovery Condenser Vent (C)	0.133	0.05 - 0.06
Extruder and Pelletizer Vent Emissions (D)	0.15	0.009 - 0.01
TOTAL EMISSION FACTOR	3.35	0.119 - 0.150

As noted, there is a 20-30 fold difference between the EPA and CMA numbers shown. For the model plant in the draft CTG of 73.5 Gg capacity, the CMA emissions would run from approximately 9-11 Mg/Yr. compared with the 246 Mg/Yr. emissions shown in the draft CTG. No references were contained in the draft CTG which allows backtracking to the EPA basis for the quoted emissions factors. Since actual experience indicates that the CMA emission factors are appropriate, the emissions expected from existing continuous polystyrene facilities are insignificant and as such, there is no significant nonoccupational exposure. Monsanto contends the CTG is not necessary for this industry segment.

- Thermal Incineration is not an Appropriate Control Device

If EPA persists, and issues a CTG for VOC emissions from polystyrene units, then Monsanto disagrees with the selection of thermal incineration as the emission control device to use (see draft CTG on page 5-1, where EPA states "Thermal incinerators are the only control device evaluated.")

Incinerators are not cost-effective control devices for control of the insignificant VOC levels which emit from existing continuous polystyrene units. As EPA stated on page 5-14 of the draft CTG "For each model plant, the resulting combined stream was smaller than the capacity of the smallest off-the-shelf incinerator available." Using EPA's cost numbers of approximately $70,000 for direct and indirect costs (see the draft CTG page 5-15, Table 5-7), and applying CMA emission levels, the cost-effectiveness would run from about $6400 to $7800/Mg. VOC removed (as compared to EPA's number of $320/Mg. VOC).

The cost-effectiveness levels would be even higher than this if a detailed cost estimate were done taking into consideration factors such as:

1. Due to the insignificance of the VOC stream size, and the size of the incinerator, auxiliary fuel would be needed to sustain burning, hence, added operating cost.

2. The technology of compressing the styrene monomer vapors and transporting them for up to 1,000 ft., would promote polymerization in the pipe and hence buildup which would need to be removed periodically. This would also add to the operating cost.

As such, incineration is not an appropriate control device to use on the insignificant VOC emissions which emit from existing continuous polystyrene units. In addition, Monsanto strongly objects to the use of its acrylonitrile incinerator data contained in Monsanto's submission to EPA on November 8, 1979 (see reference 5 on draft CTG page A-27) as being an equivalent technology base for styrene. The AN data was

submitted for another purpose and not to be extrapolated for polystyrene use due to the totally different chemical and physical properties of the two substances.

- Miscellaneous Items

1. On page 5-12, first sentence in Section 5.3.4, EPA makes the statement "The continous process emits unreacted styrene monomer (VOC) because the polymerization process approaches equilibrium before reaction completion." This is an incorrect statement since the process time for a reactor system to reach equilibrium from the initial startup operation has no impact on this CTG. The continuous process emits unreacted styrene monomer (VOC) because the fresh and recycled styrene feed streams are partially converted to polymers in the reactors (i.e.-greater than 60% styrene conversion). The amount of styrene converted is set by the polymer molecular weight, the reactor space-time-yield, and by conventional process design variables. EPA should correct the first sentence in the referenced section accordingly.

2. Table 2-7 on the draft CTG page 2-20 shows Monsanto's Long Beach, California plant on the list of polystyrene producers in nonattainment areas. Monsanto has shut this operation down and hence requests that it be removed from the list of polystyrene producers.

As documented above, Monsanto strongly encourages EPA to cease work on developing a CTG for existing continuous polystyrene unit, since the resulting VOC emissions from these units are insignificant in quantity. Monsanto would welcome the opportunity to discuss its point further with EPA if it is necessary for further clarification of the points above.

Sincerely,

W. G. Bir
Engineering Group Consultant
Corporate Engineering Department

C. D. Malloch
Regulatory Management Director, Air
Environmental Policy Staff

CDM:vre

Attachment to June 16, 1982 letter from C.D. Malloch, Monsanto to J.R. Farmer, EPA.

CHEMICAL MANUFACTURERS ASSOCIATION

October 19, 1981

Mr. Edwin J. Vincent
Lead Engineer
Chemical Applications Section
Chemicals and Petroleum Branch
Office of Air Quality Planning and Standards
United States Environmental Protection Agency
Research Triangle Park, North Carolina 27711

RE: CMA Comments on EPA Model Plant Emissions Factors for Polymers/Resins Manufacture

Dear Mr. Vincent:

Our Polymers/Resins Work Group has reviewed the draft document prepared as part of the Agency's effort to develop an NSPS for Polymers/Resins Manufacture. The Group has focused its attention primarily on the accuracy of the emissions factors and their location within individual processes as based upon its collective experience.

As you may know, CMA is a nonprofit trade association made up of approximately 184 member companies in the United States representing more than 90 percent of the domestic production capacity for basic industrial chemicals. CMA member companies have a direct and critical interest in ensuring that EPA develops emission standards when a demonstrated need is presented, that are scientifically and technically sound, reasonable, procedurally workable, cost effective, and clearly authorized by the Clean Air Act. Many of our member companies produce Polymer and Resin products and may be impacted by any regulations which may be based on the subject document.

While our comments provide what we believe are improvements to the model plant emissions factors, we do believe that the high degree of variability between individual processes used to manufacture the same product demonstrates the limited usefulness of the model plant concept. This point will be exemplified in our discussion of the individual emissions factors for the specific products/processes.

I. Polypropylene - continuous slurry, liquid phase process

A. There are two liquid phase processes now in commercial use; the large particle slurry process and the solution process. Most new liquid phase plants employ or will employ the solution process. A sizeable number but not all of these new plants are using or will use the high yield catalyst technology. As a result, there are some solution processes that still require catalyst de-ashing

Formerly Manufacturing Chemists Association—Serving the Chemical Industry Since 1872.
2501 M Street, NW • Washington, DC 20037 • Telephone 202/887-1100 • Telex 89617 (CMA WSH)

and removal. Most slurry process units and low yield catalyst plants employ jacketed, continuous stirred-tank reactors rather than loop reactors. The loop reactor is more prevalent in the high yield catalyst plants.

B. Some slurry processes operate at pressures as high as 300 psig which is much higher than the value cited in the draft.

C. The atactic generation rate of 30 percent of capacity cited in the draft would be uneconomic. Most liquid phase processes have average atactic generation rates in the range of 2 percent to 4 percent of nameplate with 5 percent an upper bound.

D. The model plant did not provide for a VOC emissions vent from the extrusion/pelletizing section. Significant quantities of hydrocarbon still remain in the polypropylene powder as it exits the dryer and enters the extruder feed chute. At this point, the powder is in equilibrium with a vapor that can contain up to 25 percent hydrocarbon (wt./wt.). As a result, there is some hydrocarbon loss through the extruder/pelletizer section and the powder/pellet transfer system downstream of the product dryer. One manufacturer has provided an estimate of 2 kg VOC/1000 kg product for this section of the process.

E. Polypropylene units are subject to plugging, especially in the polymer handling sections of the process. For this reason, most units are provided with emergency relief valves, where applicable, throughout the process and not just in the polymerization and atactic recovery sections. In the vast majority of cases, these relief valves are tied to the flare header.

II. <u>Polyethylene</u> - all products/processes

A. There are a considerable number of LDPE and HDPE plants located near or integrated with olefins manufacturing operations. Some of these units do not have recycle treaters since monomer recovery and purification is accomplished by recycle through the olefins manufacturing unit. In these cases, overall process VOC emissions from these units can be expected to be 8-10 percent lower for the LDPE processes and by up to 98 percent lower for the HDPE processes.

III. <u>Low Density Polyethylene</u> - all process

A. The total model plant capacity of 90.7 Gg/yr appears low. Plant capacities of 200-300 Gg/yr with individual process trains capacities of up to 70 Gg/yr are not uncommon.

B. The model plant does not include an emissions factor for the wax blowdown system. This section of the process can be a source of significant ethylene losses. The emissions factor is highly dependent upon the design of the wax blowdown and discharge system.

C. For the liquid phase process, the estimated frequency for emergency reactor conditions is too high. The assumption that two out of four reactors would simultaneously experience an upset is extremely unlikely. Furthermore the estimated 130 reactor upsets per year is atypical of industrial experience.

IV. High Density Polyethylene - all process

A. Many plants use air-fluidized rather than inert gas dryers. In these plants there are some VOC emissions, in the range of 0.2-0.4 kg VOC/1000 kg product. In plants without recycle treaters, these are the major vents. Most of these emissions consist of process diluent.

B. Most plants use separate recycle treaters for each individual hydrocarbon component since they are usually recovered by fractional distillation. Therefore, an HDPE plant recycling ethylene, isobutane and butene would under most circumstances have three treaters and the vent composition of each treater would contain 100 percent of hydrocarbon treated.

V. Polystyrene - batch process

A. The emissions factors cited for the model plant may approximate the average for the industry but may not adequately describe the emissions for the purposes of regulation. Batch plants are well suited for use in the manufacture of a wide variety of products. Emissions factors for the vents for the process also vary widely with the higher emissions factors more likely during the manufacture of lower molecular weight products. Typical emissions factors span the following ranges:

Styrene Condenser Vent	0.25 - 0.75 kg VOC/1000 kg resin
Extruder Quench Vent	0.15 - 0.30 kg VOC/1000 kg resin
Reactor Heading Vent	0.15 - 1.35 kg VOC/1000 kg resin

It is important to note that the emissions factor for any given process train will change with product grade.

VI. Polystyrene - continuous process

A. Like the batch polystyrene plants, industry's experience with continuous polystyrene plants indicates a wide range of emissions factors but for different reasons. Individual continuous process trains tend to run blocked-in on one polymer grade or family of grade with relatively small variations in

emissions factors. However, different process trains dedicated to widely differing polymers may have significant differences in their emissions factors.

B. Recent process improvements have included a shift to the use of vacuum pumps to generate process vacuums. These pumps consume less energy than steam eductors and also have lower emissions factors. Industry's experience with the use of vacuum pumps are substantially different than one would expect when reviewing the model plant emissions factors. Our experience indicates that the following emissions factors are more typical of newer continuous polystyrene process technology:

Tankage	0.01 - 0.02 kg VOC/1000 kg resin
Styrene Condenser Vent	0.05 - 0.06 kg VOC/1000 kg resin
Styrene Recovery Unit Condenser Vent	0.05 - 0.06 kg VOC/1000 kg resin
Extruder Quench Vent	0.009 - 0.01 kg VOC/1000 kg resin

We trust that these comments will be considered as you revise the draft model plant emissions factors. We thank you for giving us the opportunity to review this material and are willing to meet with you to discuss our concerns in greater detail. Rich Symuleski, the Work Group leader will contact you for follow-up in this regard.

Sincerely,

Janet S. Matey

Janet S. Matey
Manager
Air Programs

JSM/sl

TEXAS CHEMICAL COUNCIL
1000 BRAZOS, SUITE 200, AUSTIN, TEXAS 78701-2476, (512) 477-4465

June 18, 1982

Mr. Jack R. Farmer, Chief (2)
Chemicals and Petroleum Branch
Emission Standards and Engineering Division (MD-13)
Office of Air Quality Planning and Standards
U. S. Environmental Protection Agency
Research Triangle Park, North Carolina 27711

RE: TCC Review Comments on the Draft CTG for Control of VOC from Polymer/Resin Manufacture 47FR19580 (May 6,1982)

Dear Mr. Farmer:

The Texas Chemical Council (TCC) submits the attached comments on the subject draft Control Technique Guideline for the control of volatile organic compound emissions from the manufacture of high-density polyethylene, polypropylene, and polystyrene.

Should the agency have any questions or wish to discuss any of the issues raised by our comments, you may contact me at (512)573-5111, Ext. 1277, or write our Austin office.

Very truly yours,

Andy Nickolaus

A. H. Nickolaus
Chairman, CTG Subcommittee
Texas Chemical Council

cc: TCC Air Policy Committee
J. B. Cox - Exxon
J. S. Matey - CMA
P. J. Sienknecht - Dow
TCC Files

AHN/cgh

COMMENTS BY THE TEXAS CHEMICAL COUNCIL
ON THE MAY, 1982 DRAFT CONTROL TECHNIQUE GUIDELINE (CTG)
FOR CONTROL OF VOLATILE ORGANIC COMPOUND (VOC) EMISSIONS
FROM THE MANUFACTURE OF HIGH-DENSITY POLYETHYLENE,
POLYPROPYLENE, AND POLYSTYRENE

The Texas Chemical Council (TCC) is an association of 85 chemical companies having more than 67,000 employees in Texas and representing approximately 90% of the chemical industry in the State. Many of the polyethylene and polypropylene plants covered by the CTG are in Texas and, thus, the proposed guidelines are of concern to us.

A. Review of Previous Comments

This draft CTG is very similar to the April, 1981 version reviewed at the June 2-3, 1981 National Air Pollutant Control Technique Advisory Committee meeting and we are disappointed that it does not more fully reflect the TCC comments submitted to the EPA than (Ref. 1). Most of our previous comments are still pertinent and are summarized below as they relate to the present CTG.

1. The CTG Does Not Fulfill It's Stated Purpose

The TCC continues to believe that the omission of absorption, and other pollutant recovery techniques, and the definition of Reasonably Available Control Technology (RACT) exclusively in terms of thermal incineration is not very useful in helping the states proceed with their own assessment of RACT - the guideline's stated purpose. The reasoning used in Section 3.1 to dismiss these other technologies presents no data and is largely specious.

2. RACT Should Allow Several Technologies

In our May 29, 1981 comments we set forth what we thought were excellent reasons why RACT should allow several abatement technologies. We still think they are valid and that a 98% reduction requirement is unduly stringent for RACT when compared to New Source Performance Standard (NSPS) requirements and the level of regulation on mobile and other sources. Restating the RACT recommendation to a 98% reduction in Section 4.1 of the present document from thermal incineration (under conditions to give a 98% reduction) in the April, 1981 version does not really address our concern.

3. The Facts Do Not Support A 98% Abatement Standard

In our previous comments the TCC questioned whether a 98% destruction efficiency could be achieved in all applications. However from subsequent consultation with incineration experts we conceded (Ref. 2) that a 98% efficiency could be achieved in all new, well-designed and well-operated incinerators. The TCC continues to believe that incinerator efficiencies should not be set at achievable levels. RACT should be based on demonstrated levels in equipment that operates pretty much as designed without elaborate post-installation modifications to fine-tune it to maximum levels. The EPA has discounted from optimum performance in their evaluation of flare efficiencies (Ref. 3) and we don't see why they shouldn't discount "state-of-the-art" incinerator test results as well. Thus a realistic incinerator efficiency would certainly be less than 98%; probably in the range of 90 to 95%.

4. RACT Should Include the Use of Flares

Our previous comments are still pertinent and since then the results of the EPA sponsored John Zink/ Battelle studies have become available. They show destruction efficiencies greater than 99% for smokeless operation in two different flare systems and average efficiencies of about 96% in tests of non-smokeless operation on one flare. Thus available measured data show flare efficiencies comparable to thermal incineration (Ref. 4).

For reasons known only to themselves, the EPA has been hostile to the use of flares and has nitpicked and discounted test results showing high destruction efficiencies. We find the summary of flare efficiencies on page 5-17,18 of this CTG to be biased and misleading. A 1978 report, heretofore unknown, showing 70-98% efficiencies for natural gas (Reference 10, p. 5-12 of CTG) is quoted and relied on heavily to discount flare efficiencies to 90% for economic studies. This report does not show up in Reference 4, also published by the EPA in April, 1982. Last year the Chemical Manufacturers Association looked for flare test facilities that would be suitable to the EPA and found none except the John Zink facilities. Thus we have the following questions about the 70-98% data from National Air Oil Burner (EPA's Ref. 10):

- Were the data measured?
- Were the results subjected to the same critical review as the others?

If not, we think they should not be included in the summary.

This CTG (p. 5-17,18) lists four flare studies; Du Pont, National Air Oil Burner, Union Carbide, and Seigel. Reference 4 also lists four flare studies; Du Pont, Union Carbide, Seigel, and Zink/Battelle. Why were the Zink/Battelle studies which showed high destruction efficiencies and which were run for the EPA left out of this study? And why was the National Air Oil Burner report left out of Reference 4?

The CTG's discussion of flares states that "The uncertainity associated with flare combustion contrasts starkly with our knowledge of incinerators and boilers. Evidence to show the thoroughness of combustion efficiency in these devices is ponderous." One can be ignorant of anything if they refuse to study it and the data presented in Appendix A is hardly ponderous. Six plant scale test results are presented and these show destruction efficiencies ranging from 70.3 to 99.9%. If the EPA applied the same critical criteria to incinerators as they do to flares they would have to conclude incinerator efficiencies are significantly less than 98%. Based on information from in-house experts we think all combustion devices will give high destruc- efficiencies if the pollutant does not by-pass and actually experiences the flame. Thus even new incinerators can give poor results such as the Petro-tex data if by-passing occurs.

The TCC does not want to belabor this issue but we think it is time the EPA judged data for flares by the same criteria as they use for boilers and incinerators. We realize flare efficiency is not readily measured but the test of a control technique should be its cost effectiveness and efficiency, not its ease of enforcement.

Finally, as the EPA is probably aware, flare tests by the Chemical Manufacturers Association should be underway now at the John Zink plant. Results from this study will be available shortly and should be included in any final appraisal of flare destruction efficiency.

5. Emission Reductions in the April, 1981 CTG Were Overstated

This comment is no longer applicable since projections of industry emissions have been removed from this draft of the CTG.

B. Processes Covered by the CTG

The Phillips particle form (slurry) process is used by the EPA for their high-density polyethylene model plant. It is intended "to represent all other liquid-phase processes with high-efficiency catalyst that do not require catalyst removal." But Dow, Du Pont, and perhaps others use solution, liquid-phase processes that are completely different from the Phillips process, the emissions are different, and they come out at different places. We presume these are not covered by this CTG since the EPA has made no evaluation of appropriate control tehcnology or abatement costs for them.

We recommend Section 4.1 be revised to make clear that the EPA RACT recommendation apply to high-density polyethylene plants using low-pressure, slurry, liquid-phase processes.

C. RACT Recommendation and Costs

For reasons already discussed the TCC believes the 98% reduction recommendation is too stringent and that a 90 to 95% figure would be more realistic, more appropiate, and more consistent with NSPS and NESHAPS reduction requirements. We take it that reductions are to be calculated from the model plant "uncontrolled" emission levels since most plants already have some control facilities.

This latter fact is not reflected in the cost analysis in Section 5. It should be since the guideline applies to existing processes. Some data for high-density polyethylene plants gathered in 1977 by the TCC illustrates the problem.

Plant**	Emission Factor* (Kg/1000 Kg)	% Reduction From Model Plant
EPA Model Plant		
- Uncontrolled	12.56	0
- 98% Reduction	0.25	98
H-1	1.3	90
H-2	7.5	40

Plant**	Emission Factor* (Kg/1000 Kg)	% Reduction From Model Plant
H-3	2.4	81
H-4	100	(696)
H-5	1	92
H-6	10	20
H-7	21	(67)
H-8	31	(147)

* Includes fugitive and miscellaneous emissions.

** Plants include solution processes but this was a blind inquiry so specific process or producer was not connected to a given emission factor.

Consider the problem of plant H-1, 3, and 5. To reduce their emissions to 0.25 Kg/1000 Kg they must now install an incinerator. For plant H-5, at model plant rates, this will amount to a reduction of 160 Mg/yr. at a cost of $121,000 per year (Table 5-4) or $756/Mg, a figure over an order of magnitude higher than the $46/Mg shown in the CTG cost analysis (Table 5-6).

D. EPA's Attempted Justification for Requiring Incineration of Streams Now Being Flared

In Section 5.4.2 the EPA attempt to justify requiring incineration of streams now being flared. Their whole case rests on the assumption of a low efficiency (90%) for flares and a "state-of-the-art" efficiency (98%) for incinerators. As discussed earlier (A 3 and 4), the TCC doubts that there is any significant difference between the destruction efficiency of flares and incinerators. Without definitive data to quantify a difference between the two the EPA's proposal to require the replacement of existing flares with incinerators is unconscionable.

The Texas Chemical Council
1000 Brazos, Suite 200
Austin, Texas 78701
June 18, 1982

REFERENCES

1. Texas Chemical Council to Don R. Goodwin, EPA, "Comments by the Texas Chemical Council on the Draft Control Technique Guideline ...," May 29, 1981.

2. TCC to Jack R. Farmer, EPA, "Proposed NSPS for Air-Oxidation Processes, Incinerator Efficiency", January 4, 1982.

3. EPA, "Fugitive Emission Sources of Organic Compounds - Additional Information on Emissions, Emission Reduction Costs", April 1982, EPA-450/3-82-010, Page 4-68.

CHEMICAL MANUFACTURERS ASSOCIATION

GERALDINE V. COX, Ph.D.
Vice President
Technical Director

June 21, 1982

Mr. Jack R. Farmer, Chief
Chemicals and Petroleum Branch
Emissions Standards and Engineering Division
Office of Air Quality Planning and Standards
U. S. Environmental Protection Agency
Research Triangle Park, North Carolina 27711

RE: CMA Review Comments on the Draft Guideline for the Control of Volatile Organic Emissions from Manufacture of High Density Polyethylene, Polypropylene and Polystyrene Resins.

Dear Mr. Farmer:

The Chemical Manufacturers Association's (CMA) Polymers and Resins Work Group has reviewed the Draft CTG for the Control of Volatile Organic Compound Emissions from the Manufacture of High Density Polyethylene, Polypropylene and Polystyrene Resins. Our Work Group has been tracking this effort since the development of Preliminary Draft documentation by the Agency and provided comments on the CTG at the June 2, 1981, NAPCTAC meeting. In general, EPA has not responded to our earlier comments in preparing the current Draft CTG.

As you may know, CMA is a nonprofit trade association whose company members represent more than 90% of the productive capacity of basic industrial chemicals within this country.

Our comments are focused on the major issues that must be resolved to provide an effective, flexible CTG of value to the states in achieving attainment with the ozone NAAQS. Since the Agency has not addressed our earlier comments, they are still relevant with respect to the Draft CTG.

The issues addressed in today's comments include:

- The definition of RACT is more typical of LAER and is inconsistent with RACT levels defined by other CTG's for VOC emissions reduction.

- Despite data that demonstrate high VOC destruction efficiency for flares, the Agency still does not define this technology as RACT for VOC emissions control from Polymers and Resins Manufacture. This is inconsistent with the Agency's position on the NSPS for SOCMI Distillation Units where flares are allowed.

- The model plant description and emissions factors for polystyrene manufacture are not representative of current industry practice and overstate both the emissions and the cost effectiveness of RACT control for these sources.

Formerly Manufacturing Chemists Association—Serving the Chemical Industry Since 1872.
2501 M Street, NW • Washington, DC 20037 • Telephone 202/887-1260 • Telex 89617 (CMA WSH)

- The Agency has relied on obsolete information in developing incinerator costs which overstates the cost effectiveness of RACT.

I. Designation of RACT

The Draft CTG states that a 98% weight reduction of VOC emissions from continuous vents is representative of RACT for Polymers and Resins Manufacture. This level of emissions reduction is more typical of LAER for process emissions sources. For example, the draft CTG is more stringent than the preliminary draft NSPS for SOCMI Distillation Units. It is also more stringent than the 97% reduction in benzene emissions specified in the Agency's proposed NESHAP for Benzene from Maleic Anhydride Manufacture. RACT retrofit requirements for existing sources should be less stringent than the NSPS requirements for the same source category. The RACT requirements should also be less stringent than BACT, LAER, and NESHAP requirements for similar types of emissions. The level of control specified by this CTG should be consistent with the levels specified in other CTG's that are under development for the control of VOC emissions.

CMA recommends that RACT be set at a lower percentage level of VOC emissions reductions that will allow individual states to select the level of emissions reductions for existing sources. This permits the optimal selection of RACT used by the states to bring individual ozone non-attainment areas into compliance with the NAAQS.

II. Flares as Equivalent RACT

At the NAPCTAC public hearing on the Preliminary Draft CTG for Polymers and Resins Manufacture, CMA commented extensively on this issue. Our concerns have not been addressed by the Agency in the latest draft of the CTG. CMA maintains that the available data on flare destruction efficiency demonstrate that these devices qualify as RACT for VOC emissions control. The Draft CTG should be changed to permit the use of flares as RACT for polyolefins plants.

CMA and EPA are currently funding a study of flare efficiency at the John Zink Company Test Center. This study is designed to determine the VOC combustion and destruction efficiencies achieved by flares controlling small continuous streams typical of those found in polymers and resins and other chemical manufacturing processes. Since EPA is intimately involved in this study, CMA takes the position that any CTG provision that would preclude the use of flares is inappropriate and strongly recommends that the language in the final CTG not discourage their use.

Furthermore, since flares are specified as an acceptable control technique for meeting the NSPS for SOCMI Distillation Units, CMA sees no reason why flares should not be acceptable as RACT for the CTG for Polymers and Resins Manufacture.

III. Model Plant Descriptions and Emissions Factors

The model plant descriptions and emissions factors for polystyrene manufacture are generally not representative of current industrial practice. A wide range of polystyrene polymers are manufactured, ranging from low molecular weight emulsions to high molecular weight crystalline polymers. Emissions factors generally decrease with increasing molecular weight.

Recent increases in plant steam costs have forced some resin manufacturers operating plants of capacities similar to the model plant to provide process vacuums using vacuum pumps rather than steam eductors. CMA provided similar comments to EPA in a letter dated October 19, 1981, for the NSPS Polymers and Resins development activity. In this letter we indicated that these process improvements have lowered typical emissions factors for continuous polystyrene units to 0.15 kg of VOC/1000 kg of resin or less. This is approximately 5% of the model plant emissions factor of 3.09 kg of VOC/1000 kg of resin. As a result, EPA has drastically overestimated total emissions from existing polystyrene facilities. Using the more current emission factor, total industry wide process emissions are 11 MG of VOC/year rather than the 227 MG of VOC/year estimated by EPA.

This reduction in emissions has significant impact on the cost effectiveness of the CTG. At the lower emissions rate, more typical of industry practice, the control costs resulting from incinerating these emissions are $6,586./MG of VOC destroyed rather than the $320./MG of VOC destroyed estimated by EPA. For this reason, CMA concludes that further control of these emissions as specified in the CTG is unjustified. We recommend that continuous polystyrene facilities with emissions factors typical of those described by CMA be exempt from the CTG on the basis that they are already demonstrating RACT.

IV. Limitations in the Incinerator Cost Data

Again, CMA commented extensively on this issue at the NAPCTAC meeting. In preparing the Draft CTG the Agency ignored our comments on the limitations of the cost data. We wish to reemphasize that EPA should use the more representative cost information in the Hydroscience data base in determining the cost effectiveness of this CTG.

We trust that these comments will be considered as you prepare the final version of the CTG. Enclosed for your review, are copies of our previously submitted comments referred to in this letter. If you have any questions or comments, please contact Janet S. Matey, Manager, Air Programs at (202) 887-1179. We thank you for having the opportunity to comment on the Draft CTG.

Sincerely yours,

Geraldine V. Cox

Enclosures

ATTACHMENT TO JUNE 21, 1982 LETTER
FROM G.V. COX, CMA TO J.R. FARMER, EPA.

STATEMENT

OF

RICHARD A. SYMULESKI

ON BEHALF OF

THE CHEMICAL MANUFACTURERS ASSOCIATION

BEFORE THE

NATIONAL AIR POLLUTION CONTROL
TECHNIQUES ADVISORY COMMITTEE

ON

PRELIMINARY DRAFT CONTROL TECHNIQUES GUIDELINE

FOR

CONTROL OF VOLATILE ORGANIC COMPOUND
EMISSIONS

FROM THE

MANUFACTURE OF HIGH DENSITY POLYETHYLENE,
POLYPROPYLENE, POLYSTYRENE RESINS

JUNE 2, 1981

CHEMICAL MANUFACTURERS ASSOCIATION
2501 M STREET, NW
WASHINGTON, D.C. 20037

MY NAME IS RICHARD A. SYMULESKI. I AM THE ENVIRONMENTAL CONSERVATIO COORDINATOR FOR THE AMOCO CHEMICALS CORPORATION SUBSIDIARY OF STANDARD OIL OF INDIANA. I AM SPEAKING TO YOU TODAY ON BEHALF OF THE CHEMICAL MANUFACTURERS ASSOCIATION'S PROCESS EMISSIONS REGULATIONS TASK GROUP AND POLYMERS/RESINS WORK GROUP. CMA IS A NONPROFIT TRADE ASSOCIATION HAVING 186 UNITED STATES MEMBER COMPANIES THAT REPRESENT OVER 90 PERCENT OF THE PRODUCTION CAPACITY OF BASIC INDUSTRIAL CHEMICALS WITHIN THIS COUNTRY. WE ARE PLEASED TO HAVE THE OPPORTUNITY TO PRESENT OUR VIEWS AND CONCERNS TO THIS COMMITTEE ON THE PRELIMINARY DRAFT CONTROL TECHNIQUES GUIDELINE FOR THE CONTROL OF VOLATILE ORGANIC COMPOUNDS FROM THE MANUFACTURE OF HIGH DENSITY POLYETHYLENE, POLYPROPYLENE AND POLYSTYRENE RESINS. CMA MEMBER COMPANIES HAVE A CONTINUING INTEREST IN ENSURING THAT EPA DEVELOPS, WHEN NEEDS WARRANT, CONTROL TECHNIQUES GUIDELINES (CTG'S) THAT ARE TECHNICALLY SOUND, REASONABLE, ADMINISTRATIVELY FEASIBLE AND COST-EFFECTIVE. CMA HAS ATTEMPTED TO WORK WITH THE AGENCY IN DEVELOPMENT OF THIS CTG. TO DATE OUR EFFORT HAS BEEN LIMITED BY EPA TO TRACKING THEIR REGULATORY DEVELOPMENT EFFORTS. AS A RESULT, WE HAVE COMMENCED A PROCESS TO THOROUGHLY REVIEW THIS CTG AND HAVE INITIALLY IDENTIFIED SIX MAJOR PROBLEM AREAS IN THE PRELIMINARY DRAFT, WHICH WILL FORM THE BASIS OF MY PRESENTATION. THESE PROBLEMS INCLUDE:

- INACCURACIES IN THE ESTIMATION OF THE NUMBER OF PLANTS THAT COULD BE IMPACTED BY THE CTG.
- LIMITATIONS IN THE DESCRIPTION OF THE INDUSTRY, ITS EMISSIONS FACTORS AND IN THE DEFINED MODEL PLANTS.
- LACK OF ADMINISTRATIVE FLEXIBILITY TO THE STATES IN IMPLEMENTATION OF REASONABLY AVAILABLE CONTROL TECHNOLOGY (RACT).

- DEFINITION OF INCINERATION AS RACT FOR THESE SOURCE CATEGORIES AND EXCLUSION OF APPLICABLE AND APPROPRIATE ALTERNATE CONTROL TECHNIQUES.
- FAILURE TO RECOGNIZE FLARES AS EQUIVALENT RACT.
- LIMITATIONS IN THE COST DATA USED TO JUSTIFY RACT.

BECAUSE THESE PROBLEMS ARE EQUALLY APPLICABLE TO ALL THREE POLYMERS INCLUDED IN THE CTG, MY COMMENTS WILL PROVIDE A GENERAL OVERVIEW OF THE NATURE OF THE PROBLEMS IDENTIFIED. TO ILLUSTRATE SPECIFIC POINTS I WILL PRESENT EXAMPLES FOR INDIVIDUAL POLYMERS. HOWEVER, THESE COMMENTS SHOULD NOT BE CONSTRUED AS APPLYING ONLY TO THE SPECIFIC POLYMERS MENTIONED SINCE THEY DO CROSS PRODUCT LINES.

I. NUMBER OF PLANTS SUBJECT TO THE CTG.

THE CTG IDENTIFIES A TOTAL OF 17 PLANTS IN OZONE NONATTAINMENT AREAS THAT HAVE REQUESTED STATE IMPLEMENTATION PLAN (SIP) EXTENSIONS FROM THE 1982 COMPLIANCE DEADLINE. THESE PLANTS WILL, THEREFORE, BE AFFECTED BY THE CTG. CMA HAS SURVEYED THOSE STATES WHICH HAVE REQUESTED AN EXTENSION OF THE OZONE ATTAINMENT DATE AND WE HAVE IDENTIFIED A MINIMUM OF 25 PLANTS THAT WILL BECOME SUBJECT TO THE CTG. THERE ARE AN ADDITIONAL 23 PLANTS LOCATED IN OZONE NONATTAINMENT AREAS FOR WHICH NO EXTENSIONS HAVE YET BEEN FILED. IT IS HIGHLY UNLIKELY THAT ALL THESE AREAS WILL ACHIEVE COMPLIANCE WITH THE OZONE STANDARD BY THE DEADLINE DATE. THEREFORE, A TOTAL OF 48 PLANTS COULD ULTIMATELY BECOME SUBJECT TO THIS CTG.

IN ADDITION, THERE ARE SEVERAL ERRORS IN THE LIST OF PLANTS IDENTIFIED BY EPA AS BEING SUBJECT TO THE CTG. AMOCO HAS PUBLICLY ANNOUNCED THAT IT WILL NOT REBUILD ITS NEW CASTLE POLYPROPYLENE PLANT.

ALSO, ACCORDING TO CMA DATA, THE BASF POLYSTYRENE PLANT USES A SUSPENSION POLYMERIZATION PROCESS WHILE THE RICHARDSON PLASTICS GROUP PLANT MANUFACTURES STYRENE COPOLYMER RESINS. AS A RESULT, THESE THREE PLANTS ARE NOT SUBJECT TO THE CTG. FINALLY, WE WERE UNABLE TO CONFIRM EITHER THE LOCATION OR OWNERSHIP OF THE POLYSTYRENE PLANT IN DEER PARK, TEXAS.

II. DESCRIPTION OF THE INDUSTRY, ITS EMISSIONS AND MODEL PLANTS

IN DEVELOPING THE MODEL PLANTS FOR PURPOSES OF THE CTG, EPA RELIED SOLELY UPON INFORMATION FROM A SUBSET OF PLANTS LOCATED IN OZONE NONATTAINMENT AREAS. THIS APPROACH SUBSTANTIALLY REDUCES THE NUMBER OF PLANTS USED TO DEVELOP PROCESS EMISSIONS FACTORS. THE DRAWBACK TO THIS APPROACH IS THAT, TO BE REPRESENTATIVE OF THE INDUSTRY AS A WHOLE, THE SELECTED SUBSET OF PLANTS MUST MIRROR THE UNIVERSE OF PLANTS IN EXISTENCE. IF THIS IS NOT THE CASE, THEN THERE IS SIGNIFICANT POTENTIAL FOR INACCURATE DESCRIPTION OF PROCESS AND EMISSIONS CONTROL TECHNOLOGY IN PLACE, AS WELL AS FOR THE PRODUCT SPECIFIC EMISSIONS FACTORS. FOR EXAMPLE, EMISSIONS FACTORS FOR HIGH DENSITY POLYETHYLENE ARE BASED UPON PHILLIPS TECHNOLOGY. HOWEVER, MANY FIRMS MANUFACTURING THE PRODUCT EMPLOY MODIFIED PHILLIPS TECHNOLOGY OR HAVE DEVELOPED SIGNIFICANTLY DIFFERENT PROPRIETARY PROCESSES OF THEIR OWN. THERE IS SIGNIFICANT DIVERSITY IN THE HIGH DENSITY POLYETHYLENE PROCESS TYPES IN PLACE TO WARRANT DEVELOPMENT OF EMISSIONS FACTORS OVER A LARGER DATA BASE.

IN THE CASE OF POLYSTYRENE MANUFACTURING, EPA HAS AGGREGATED EMISSIONS DATA FOR TWO DIFFERENT PROCESS TYPES (BATCH AND CONTINUOUS) TO DEVELOP THE MODEL PLANT. THE RESULT IS A MODEL PLANT THAT OVERSTATES

EMISSIONS FROM CONTINUOUS POLYSTYRENE UNITS. IN THE BATCH PROCESS FUGITIVE EMISSIONS FROM REACTOR LOADING OPERATIONS CONSTITUTE A MAJOR SOURCE OF EMISSIONS, BUT THESE EMISSIONS ARE RELEASED OVER A SHORT PERIOD OF TIME, TYPICALLY 1 TO 2 HOURS EVERY 24 HOURS. CONTINUOUS PROCESSES, ON THE OTHER HAND, HAVE CLOSED FEED SYSTEMS AND DO NOT HAVE AN EMISSIONS RATE FOR REACTOR LOADING OPERATIONS AS GREAT AS THE BATCH PROCESSES. APPLICATION OF THESE DATA FOR BATCH PLANTS TO CONTINUOUS UNITS HAS RESULTED IN AN OVERESTIMATION OF THE REACTOR FEED EMISSIONS FACTOR. ALSO, SINCE THESE EMISSIONS ARE ASSOCIATED WITH THE TRANSFER OF FEEDSTOCKS FROM STORAGE FACILITIES, THEY ARE TRULY STORAGE AND FUGITIVE LOSS EMISSIONS AND SHOULD NOT BE SUBJECT TO CONTROL UNDER A CTG FOR PROCESS EMISSIONS.

THE EMISSIONS FACTORS FOR THE VACUUM SYSTEM VENTS FROM POLYSTYRENE MANUFACTURE ARE ALSO QUESTIONABLE. IT APPEARS FROM THE MAGNITUDE OF THE NUMBERS THAT THESE FACTORS ARE BASED UPON VENTS FROM STEAM EDUCTOR-TYPE VACUUM SYSTEMS. HIGH FEEDSTOCK COSTS HAVE RESULTED IN MANY MAJOR PLANTS SWITCHING TO VACUUM PUMPS FOR GENERATING PROCESS VACUUM. IN THESE PLANTS, OVERHEAD FROM THE DEVOLATILIZER AND THE STYRENE RECOVERY SECTION ARE CONDENSED FOR RECOVERY RESULTING IN LOWER EMISSIONS FACTORS FOR THE VACUUM SYSTEM.

THERE IS ALSO ONE GENERAL PROBLEM WITH APPLYING THE MODEL PLANT CONCEPT TO THE POLYMERS/RESINS INDUSTRY. MOST POLYMERS/RESINS PLANTS CAN MANUFACTURE SEVERAL PRODUCTS WHICH COVER A BROAD RANGE OF MOLECULAR WEIGHTS. PROCESS OPERATING CONDITIONS AND, THEREFORE, EMISSIONS CAN BE EXPECTED TO VARY FROM ONE PRODUCT TO ANOTHER. THE MOST APPROPRIATE EMISSIONS FACTORS WOULD CONSIST OF RANGES, SO THAT PRODUCT/PROCESS VARIATIONS COULD BE ACCOUNTED FOR.

IN SUMMARY, THE AGENCY, BY RELYING UPON AN INNACCURATE REPRESENTATION OF THE INDUSTRY, HAS DEVELOPED QUESTIONABLE MODEL PLANT CONFIGURATIONS FROM WHICH UNCONTROLLED EMISSIONS FACTORS WERE OBTAINED. AS A RESULT, THE EMISSIONS FROM THE INDUSTRY HAVE BEEN OVERSTATED AND THE ACTUAL EMISSIONS REDUCTIONS THAT WILL BE OBTAINED BY IMPLEMENTING THE CTG WILL MOST LIKELY BE MUCH SMALLER.

III. LACK OF FLEXIBILITY FOR THE STATES IN IMPLEMENTING RACT.

THE CLEAN AIR ACT REQUIRES THAT STATE IMPLEMENTATION PLANS FOR NONATTAINMENT AREAS MUST INCLUDE RACT REQUIREMENTS FOR STATIONARY SOURCES. EPA HAS PERMITTED STATES TO DEFER THE ADDITION OF RACT REGULATIONS UNTIL AFTER THE AGENCY HAS DEVELOPED CTG'S FOR INDIVIDUAL SOURCE CATEGORIES. THE CTG'S ARE TO PROVIDE STATE AND LOCAL AIR POLLUTION CONTROL AGENCIES WITH AN INFORMATION BASE FROM WHICH THEY MAY DEVELOP SPECIFIC RACT REQUIREMENTS. THE CTG FOR POLYMERS/RESINS MANDATES COMBUSTION OF THE EMISSIONS AT THE 98 PERCENT LEVEL AND ARGUES THAT THERMAL INCINERATION IS THE ONLY FEASIBLE APPROACH TO EMISSIONS CONTROL. THIS APPROACH SEVERELY CONSTRAINS THE STATE'S ABILITY TO SELECT THE MOST COST-EFFECTIVE CONTROL STRATEGIES FOR STATIONARY SOURCES UNDER THEIR JURISDICTION.

IT IS CMA'S POSITION THAT IF A CTG IS NEEDED FOR A SPECIFIC SOURCE CATEGORY, IT SHOULD BE DEVELOPED CONSISTENT WITH THE GOALS AND REQUIREMENTS OF THE CLEAN AIR ACT. AS SUCH, THE CTG MUST BE ABLE TO DESCRIBE FOR THE STATES THE APPROPRIATE RACT TECHNOLOGIES APPLICABLE UNDER A VARIETY OF SPECIFIC CIRCUMSTANCES WITHOUT DICTATING TO THE STATES HOW TO CONTROL SOURCES UNDER THEIR JURISDICTION. THE CTG SHOULD PROVIDE AN ACCURATE DESCRIPTION OF THE INDUSTRY, ITS EMISSIONS AND THE

TECHNOLOGIES CURRENTLY IN PLACE TO CONTROL THESE EMISSIONS. FROM THIS BACKGROUND THE CTG SHOULD DESCRIBE THE RACT'S APPROPRIATE FOR THE SOURCES AFFECTED. OVERALL GUIDANCE SHOULD BE GIVEN TO THE STATES IN INTERPRETING HOW SOURCES MIGHT BE AFFECTED BY THE CTG, BUT THE STATES MUST HAVE ULTIMATE CONTROL OF HOW, AND IF, THEY WILL IMPLEMENT THE CTG TO SOLVE THEIR SPECIFIC PROBLEMS. THE CURRENT CTG DOES NOT FULFILL THESE OBJECTIVES.

IV. DEFINITION OF INCINERATION AS RACT

AS CHAPTER IV OF THE PRELIMINARY DRAFT CTG STATES, RACT FOR THESE SOURCES HAS BEEN DEFINED AS 98 PERCENT CONTROL OF PROCESS VOLATILE ORGANIC COMPOUND (VOC) EMISSIONS WITH INCINERATION SERVING AS THE MODEL CONTROL TECHNIQUE. THIS DEFINED LEVEL OF CONTROL FOR RACT IS EQUIVALENT TO THE LEVEL OF EMISSIONS CAPTURE OR REDUCTION NORMALLY DEFINED FOR LOWEST ACHIEVABLE EMISSION RATE (LAER). INCINERATION IS NOT GENERALLY EMPLOYED BY THE INDUSTRY FOR THE CONTROL OF CONTINUOUS PROCESS VOC EMISSIONS IN THE POLYMERS/RESINS INDUSTRY. FLARES, HOWEVER, ARE THE MOST WIDELY USED CONTROL TECHNIQUE FOR BOTH CONTINUOUS AND INTERMITTENT EMISSIONS IN THE POLYMERS/RESINS INDUSTRY. ON THIS BASIS, THE SELECTION OF INCINERATION FOR THE RACT STRATEGY IS INCONSISTENT WITH THE GENERALLY ACCEPTED DEFINITION OF RACT.

EPA'S ARGUMENT FOR EXCLUDING BOILERS AS RACT IS INCONSISTENT WITH ITS ARGUMENT FOR SELECTING INCINERATORS. WE AGREE WITH EPA THAT BOILERS AND OTHER ENCLOSED COMBUSTION DEVICES (INCLUDING INCINERATORS) ARE NOT APPROPRIATE CONTROL DEVICES FOR INTERMITTENT STREAMS. SAFE, EFFICIENT OPERATION OF THESE DEVICES REQUIRES THAT THEY BE SIZED TO HANDLE CONTINUOUS

STREAMS WITH RELATIVELY STABLE FLOW RATES. FOR EXAMPLE, INTERMITTENT LARGE VOLUME STREAMS SUCH AS EMERGENCY RELEASES FROM REACTOR DECOMPOSITIONS IN POLYOLEFINS PLANTS SHOULD BE CONTROLLED WITH FLARES. IN SELECTING RACT, HOWEVER, EPA JUSTIFIED INCINERATION BY EXCLUDING INTERMITTENT RELEASES FROM CONTROL. ON THIS BASIS, EPA'S ARGUMENT FOR EXCLUDING BOILERS FROM RACT, EVEN THOUGH THEY HAVE BEEN USED BY INDUSTRY FOR THE CONTROL OF CONTINUOUS EMISSIONS, CANNOT BE SUPPORTED.

OTHER NONCOMBUSTION TECHNIQUES SUCH AS ABSORPTION, ADSORPTION AND CONDENSATION MAY ALSO PROVIDE HIGH VOC CAPTURE EFFICIENCIES AT LOWER COSTS THAN INCINERATION. FOR THESE SOURCES THE DEFINITION OF RACT SHOULD BE FLEXIBLE ENOUGH TO PERMIT INDUSTRY TO SELECT THE MOST COST-EFFECTIVE MEANS OF CONTROL.

V. FLARES AS EQUIVALENT RACT

THE DOCUMENT IS INTERNALLY INCONSISTENT IN ITS JUSTIFICATION TO EXCLUDE FLARES AS ACCEPTABLE RACT TECHNOLOGY. THE DOCUMENT'S ENVIRONMENTAL ANALYSIS OF RACT STATES "SINCE FLARES WERE CONSIDERED AN ACCEPTABLE CONTROL METHOD ONLY FOR INTERMITTENT STREAMS, FLARES HAVE NO ROLE IN THESE RACT RECOMMENDATIONS." HOWEVER, IN THE DESCRIPTION OF EMISSION CONTROL TECHNIQUES THE DOCUMENT STATES "ELEVATED FLARES HAVE A WIDE CAPACITY RANGE AND ARE CAPABLE OF ADAPTING TO CHANGES IN EFFLUENT FLOW RATES AND CONCENTRATIONS THAT ARE FOUND IN THE POLYMER INDUSTRY." CMA CONTENDS THAT A PROPERLY DESIGNED FLARE SYSTEM CAN HANDLE BOTH INTERMITTENT AND SMALL CONTINUOUS STREAMS, AND PART OF THIS DOCUMENT AGREES WITH OUR CONTENTION. IN FACT, FLARES ARE THE ONLY CONTROL TECHNOLOGY DESCRIBED IN THIS DOCUMENT WHICH CAN HANDLE BOTH TYPES OF STREAMS.

THERE ARE A NUMBER OF ENGINEERING PRACTICES CURRENTLY IN USE WITHIN INDUSTRY TO DEAL WITH FLARING LOW FLOW CONTINUOUS EMISSIONS. ONE SUCH SYSTEM INVOLVES THE USE OF STAGED ELEVATED FLARE SYSTEMS WHERE A SMALL DIAMETER FLARE IS OPERATED IN TANDEM WITH A LARGE DIAMETER FLARE. THE SYSTEM IS DESIGNED SUCH THAT THE SMALL FLARE TAKES THE CONTINUOUS LOW FLOW RELEASES AND THE LARGER FLARE ACCEPTS EMERGENCY RELEASES. A SECOND SYSTEM INVOLVES THE USE OF A SEPARATE CONVEYANCE LINE TO THE FLARE TIP FOR CONTINUOUS LOW VOLUME, LOW PRESSURE RELEASES. A THIRD SYSTEM, SOMETIMES USED IN CONJUNCTION WITH EITHER OF THE ABOVE SYSTEMS, INVOLVES THE USE OF CONTINUOUS FLARE GAS RECOVERY. IN THE LATTER SYSTEM A COMPRESSOR IS USED TO RECOVER THE CONTINOUOUSLY GENERATED FLARE GAS "BASE LOAD." THE COMPRESSOR IS SIZED TO HANDLE THE "BASE LOAD" AND ANY EXCESS GAS IS FLARED.

A DISADVANTAGE LISTED IN THE CTG FOR FLARE SYSTEMS IS THE POSSIBILITY OF DUCT FIRES FROM MANIFOLDING VENT STREAMS. OBVIOUSLY, THIS IS A DISADVANTAGE COMMON TO ALL THE DESCRIBED CONTROL TECHNOLOGIES, INCLUDING THE PREFERRED RACT ALTERNATIVE, INCINERATION.

FLARE SYSTEMS HAVE BEEN RECOGNIZED THROUGHOUT THE POLYMER INDUSTRY AS SAFE, COST-EFFECTIVE CONTROL TECHNOLOGIES WHICH CAN ACHIEVE OR APPROACH THE SAME DEGREE OF VOC DESTRUCTION AS OTHER INCINERATION DEVICES. THE MOST DEFINITIVE DATA AVAILABLE ON FLARING EFFICIENCIES ARE CONTAINED IN THE GERMAN FLARE STUDY BY SIEGEL. THE RESULTS OF THE GERMAN FLARE STUDY REPRESENT A YEAR'S WORTH OF TEST DATA ON FLARES WHICH CONSISTED OF ROUGHLY 1,300 TEST SAMPLES. THE TESTS WERE PERFORMED AT 42 DIFFERENT MASS RATES, 23 DIFFERENT FLARE GAS DENSITIES AND 114 STEAM/GAS RATIOS. CONVERSION EFFICIENCY WAS FOUND TO BE INDEPENDENT OF MASS FLOW, WIND SPEED OR GAS COMPOSITION FOR THE REFINERY GAS STUDIED. OF

THE 1,300 TESTS ONLY FOUR WERE LESS THAN 99 PERCENT EFFICIENT. THE LOWEST VALUE (96 PERCENT) WAS OBTAINED BY QUENCHING THE FLAME UNDER CONDITIONS OF 10 TIMES NORMAL STEAM RATE. IN ALL CASES THE MEASURED EFFICIENCY WAS GREATER THAN 95 PERCENT.

BATTELLE MEMORIAL LABORATORIES HAS CONDUCTED A STUDY FOR EPA TO DEMONSTRATE MEASURING TECHNIQUES FOR USE AT FLARE TOWERS. THE STUDY WAS CONDUCTED OVER A THREE-DAY PERIOD USING A JOHN ZINC FACILITY FLARING PROPANE. ALTHOUGH THE TEST HAS LONG BEEN COMPLETED, THE BATTELLE STUDY HAS NOT BEEN MADE AVAILABLE (EVEN IN DRAFT FORM) FOR PUBLIC REVIEW AND COMMENT. WE HAVE LEARNED, HOWEVER, THAT (ALTHOUGH NOT A SPECIFIC OBJECTIVE OF THE STUDY) DATA EXIST DEMONSTRATING THAT THE FLARE SYSTEM WAS ABLE TO ACHIEVE A DESTRUCTION EFFICIENCY OF GREATER THAN 95 PERCENT, EVEN WITH A SMOKING FLARE. CMA CONTENDS THAT THE CTG SHOULD NOT BE ISSUED IN FINAL FORM UNTIL THE RESULTS OF THIS STUDY CAN BE EVALUATED.

IN ORDER FOR EPA TO BE CONSISTENT WITH THE SPIRIT, IF NOT THE EXPRESS LANGUAGE OF THE RECENTLY ISSUED EXECUITVE ORDER NO. 12291 (FEBRUARY 17, 1981), EPA IS UNDER AN AFFIRMATIVE DUTY TO ALLOW THOSE CONTROL OPTIONS THAT DATA DEMONSTRATE WILL ACHIEVE THE ENVIRONMENTAL OBJECTIVES OF THE REGULATION, BUT AT A LOWER COST TO INDUSTRY. IN THIS REGARD, THE AGENCY SHOULD NOT PRECLUDE SUCH TECHNICALLY SOUND AND COST-EFFECTIVE CONTROL TECHNIQUES, UNLESS THE AGENCY ESTABLISHES AN ADMINISTRATIVE RECORD THAT CLEARLY DOCUMENTS THESE COST-EFFECTIVE CONTROL TECHNIQUES WILL OFFSET A SIGNIFICANT ENVIRONMENTAL BENEFIT THAT COULD OTHERWISE RESULT.

VI. Limitations In the Incinerator Cost Data

CMA's concern is that the incinerator data used in support of the CTG are outdated, inaccurate and inconsistent with the incinerator cost information prepared for the air oxidation CTG and New Source Performance (NSPS) activities. The cited reference for the polymers/resins CTG incinerator cost estimates is a report prepared for EPA by Gard, Inc. in December 1978. The costs in this report have been updated to December 1977 by Gard, Inc. but the primary sources for both design and cost information in the Gard report date back to 1972. In attempting to account for inflationary effects, EPA has used industry accepted inflation factors to update the costs to June 1980. The Agency should rely on more recent cost information when it is available rather than attempt to rely upon cost data escalated over a nine year interval. These more recent cost data were developed for EPA by Hydroscience as part of the air oxidation CTG/NSPS effort. The information in the Gard report also does not indicate how many incinerator cost data points were used to develop the cost curves. From the shape of the curves it could be assumed that they were extrapolated from one or two points by the use of scaling factors.

Both the incinerator design and cost information from the Gard report are inconsistent with the information generated by Hydroscience for the air oxidation regulations. This inconsistency exists despite the similarities in the application of incinerator technology for control of VOC's from polymers/resins and air oxidation units. The polymers/resins CTG uses as a basis thermal incineration at 1500° F in an incinerator having a 0.5 second residence time. The air oxidation

CTG PROPOSED INCINERATING GASES OF SIMILAR HEAT AND VOC CONTENT AT 1600° F IN AN INCINERATOR WITH A 0.75 TO 1.0 SECOND RESIDENCE TIME. IN GENERAL, THE MORE CONSERVATIVE CRITERIA IN THE AIR OXIDATION CTG WILL ASSUME COMPLETE COMBUSTION OF ORGANICS AND WILL RESULT IN A MORE EXPENSIVE INCINERATOR HAVING HIGHER SUPPLEMENTAL FUEL REQUIREMENTS. PUT ANOTHER WAY, IF THE SIZING AND OPERATING CRITERIA FOR THE INCINERATOR FOR AIR OXIDATION CHEMICALS ARE CORRECT, THEN THE DESIGN CRITERIA AND COST ESTIMATES FOR INCINERATION IN THE POLYMERS/RESINS CTG ARE TOO LOW. A SIMPLE COMPARISON OF TOTAL ANNUALIZED COST ESTIMATES INDICATES THAT THE GARD REPORT WILL PREDICT INCINERATOR COSTS THAT ARE ON THE AVERAGE 25 PERCENT TO 35 PERCENT LOWER THAN THE COSTS OF THOSE PREDICTED BY THE HYDROSCIENCE DATA BASE. WE BELIEVE THE HYDROSCIENCE COST DATA ARE MORE REPRESENTATIVE OF INDUSTRY EXPERIENCE AND SHOULD BE USED AS THE BASIS FOR DETERMINING THE COST EFFECTIVENESS OF THIS CTG.

IN SUMMARY, CMA HAS IDENTIFIED SEVERAL KEY DEFICIENCIES WITH THE PRELIMINARY DRAFT CTG WHICH ADVERSELY AFFECT THE UTILITY OF THE CTG TO THE STATES, AND INCORRECTLY ESTIMATE THE BENEFITS THAT WILL ACCRUE FROM ITS IMPLEMENTATION. CMA BELIEVES THAT A MORE REALISTIC ASSESSMENT OF THE INDUSTRY, ITS EMISSIONS AND THE CONTROL TECHNOLOGY IN PLACE CAN BE USED TO DEVELOP A CTG WHICH WILL DEFINE COST-EFFECTIVE RACT STRATEGIES THAT ARE WORKABLE FOR INDUSTRY, WHILE MEETING THE NEEDS OF THE STATES IN BRINGING NONATTAINMENT AREAS INTO COMPLIANCE.

CMA IS GRATEFUL FOR HAVING HAD THE OPPORTUNITY TO ADDRESS THE COMMITTEE TODAY. OUR WORK GROUP WILL REMAIN AVAILABLE TO WORK WITH EPA IN DEVELOPING A REASONABLE, COST-EFFECTIVE CTG FOR THE POLYMERS/RESINS INDUSTRY. THIS CONCLUDES MY FORMAL STATEMENT. I WILL ATTEMPT TO ANSWER ANY QUESTIONS YOU MAY HAVE CONCERNING MY PRESENTATION.

Gulf Oil Chemicals Company

June 21, 1982

P. O. Box 3766
Houston, TX 77001

Mr. Jack R. Farmer, Chief
Chemicals and Petroleum Branch
Emission Standards and Engineering Division (MD13)
Environmental Protection Agency
Research Triangle Park
North Carolina 27711

Dear Mr. Farmer:

EPA published the "Control of Volatile Organic Compound Emissions from the Manufacture of High-Density Polyethylene, Polypropylene, Polystyrene Resins" and requested comments. Our comments below are directed at the high-density polyethylene and polypropylene manufacturing sections:

1. A RACT of 98 weight percent reduction in VOC emissions from continuous vent streams is based on biased data from unrelated sources.

Page 3-6, paragraph two states". . . that 98 percent destruction efficiency is sometimes achievable . . .", page 4-1, paragraph four states thermal and catalytic incinerators or boilers and process heaters "...can achieve 98 percent VOC destruction efficiency . . .", and page 5-10 paragraph four states ". . . 98 percent efficiency for incinerator was assumed (for the model plant) . . .". A 98 percent efficiency can probably be achieved, but to maintain this efficiency on a continuous or average basis has not been supported by data in this document.

The supporting data in Appendix A is based on incineration tests on waste vent streams from an oxidative butadiene unit, maleic anhydride units, an acrylonitrile unit, acrylic acid units, and lab-scale tests. The organic compounds and concentrations in the plant scale tests are different than those found in units subject to this guideline document and as stated on page A-22 the VOC reduction efficiency achieved is unique for each VOC compound. Again in the lab-scale tests, real world efficiencies are not comparable as stated on page A-24 due to excellent mixing in laboratory equipment resulting in high reported efficiencies.

The achievement and maintenance of a 98 percent destruction efficiency are further questionable as Petro-Tex spent $2.5 million on an incinerator which achieved seventy percent efficiency. Only after thousands of dollars in improvements, was a greater than 98 percent efficiency achieved. The Rohm and Haas tests were made only when the production unit was "operating smoothly and the combustion temperature was at a steady state".

Gulf
A DIVISION OF GULF OIL CORPORATION
2 HOUSTON CENTER
909 FANNIN STREET
TELEPHONE: (713) 754-2000

The use of data from the CTG for air oxidation processes is not adequate as a basis for RACT in this guideline document, and 98 percent control efficiency is not achievable on a continuous and average basis.

2. Discussion throughout the document infers only incinerators and boilers can achieve RACT.

There was only one reference to the use of process heaters and one reference to the use of refrigerated condensers as possible methods to achieve RACT. In the reference to condensers, the efficiency was questioned. There was no reference to the processing of vent streams by other units operated at the site or by neighboring units, nor was there reference to combinations of control techniques such as the use of refrigerated condensers followed by flare combustion. The reiteration of thermal incineration suggests a specific control method and the authority to specify control methods is questionable.

3. The documentation of flare efficiency is not complete, disregards or simplifies efficiency data, and makes inaccurate statements in flare design and operations.

Page 4-1 states flare efficiency ". . . cannot be quantified in absence of adequate test data . . .", yet four flare studies were reviewed with one study containing 1298 test measurements. A portion of this data was disregarded because the flared vent gas was from a petroleum industry. A petroleum industry vent gas is more variable in composition which makes design more difficult and is more susceptible to efficiency problems than a plastics industry flare.

The description of a polymer plant flare on page 3-18 states, "The flares are mainly used to handle emergency blowdowns which requires the control device to handle large volumes of gases with variable compositions." This is true for high pressure processes, but not for low pressure, liquid phase high-density polyethylene and polypropylene manufacture. On page 3-12 good combustion design for flares is questioned due to lack of "completely well-defined" measurement methods. Agency or society approved methods give reliability to measurement methods, but the lack of these methods should not detract from the evaluation of combustion design or the merit of the flare efficiency data. The phrase on page 5-18 in reference to flares stating, ". . . variations in flow and heat content of the waste stream could extinguish the flame . . ." is completely false as flares are designed with continuous pilot flames. A continuous pilot flame is essential to ensure safe conditions.

4. Cost calculations for thermal incinerator installation need corrections and cost justification of retrofit is incomplete.

On page 5-5 the escalation index needs updating, the operating labor cost of $11.10/hr (including overhead) is incorrect and should be $19.10/hr (including overhead and benefits), and the interest rate of 10 percent should be updated to the 18-20 percent range. The cost analyses did not include the cost of a filter system upstream of the

incinerator which is necessary to remove polymers and entrained liquids. Page 5-11 and 5-13 did not contain operating labor, maintenance labor, and electricity costs for the reciprocating compressor nor maintenance labor costs for manifolding.

In order to assess the reasonableness of retrofit (page 5-18), a flare efficiency of 90 percent was used without justification, and the incremental cost effectiveness on page 5-19 considered only the annualized cost of the incinerator in the calculations when annualized cost of the incinerator plus the manifold, plus a filter system, plus the compressor should have been considered.

If you have any questions, please address them to Ms. J. F. Dey at 713-754-4709 or to M. R. Vyvial at 713-420-4296.

J. R. Strausser

J. R. Strausser

JRS/tls

Polysar Incorporated
Resins Division
Process Development & Engineering Group
29 Main Street, P.O. Box 116, Leominster, Mass. 01453

Telephone (617) 537-9901
Telex 710 347-1924

July 19, 1982

Mr. Jack R. Farmer, Chief
Chemicals and Petroleum Branch
Emission Standards and Engineering Division
United States Environmental Protection Agency
Office of Air Quality Planning and Standards
Research Triangle Park, NC 27711

Dear Sir:

This letter is written in response to the Draft Control Technique Guideline (CTG) dated May 19, 1982 entitled "Control of Volatile Organic Compound Emissions from the Manufacture of High Density Polyethylene, Polypropylene and Polystyrene Resins".

The contents of this letter are intended to provide assistance to the EPA in drafting revisions to the existing CTG.

Company Background

Polysar is a multinational manufacturer of rubber petrochemical and thermoplastic resins, with annual sales in 1981 of $1.3 billion. Polysar currently operates three polystyrene manufacturing facilities in the United States. Polysar's total production of polystyrene, plus our operating experience and technology at these facilities, enables Polysar to be a significant producer of North American polystyrene.

Principles of Emission Control for Polystyrene

The major raw materials normally utilized in the manufacture of polystyrene are styrene, ethyl benzene (processing aid in process), synthetic rubber (impact modifier) and a high boiling plasticizer, (mineral oil is commonly used).

Polystyrene manufacture differs from the production of either polyethylene or polypropylene in the type of equipment used. One of the prime reasons for these differences is the absence of highly volatile material (low boiling) in the manufacturing process.

Due to the absence of low boiling hydrocarbons in the system, condensation is used as a prime mode of recovering unused hydrocarbon from the vapor stream flashed off (or stripped) from the product in the last stage of the

polymer manufacturing process. The major components to condense are styrene and ethyl benzene. Their vapor pressures at 60°F and atmospheric pressure are 3.5mms and 5.0mms respectively, and this low vapor pressure enables them to be readily condensed even at low concentrations in a vapor stream. Condensation is believed to be an accepted mode of control in a majority of the bulk polystyrene facilities in use in the United States.

Monomer Recovery

To achieve any measure of profitability in the polystyrene industry, it is very important to maximize the recovery of unused monomer. Recovered monomer can normally be reused, after purification, and must be successfully recycled to achieve profitable results.

Condensing unused monomer from the vapor phase which is generated in the last phase of the process is, therefore, an absolute financial necessity to the successful operation of a polystyrene process.

Due to the physical properties of materials used and the type of process employed, successive cooling/condensation steps are used to achieve acceptable results both for proper recovery of the unused monomer and for environmental reasons.

Because the main incentive for monomer recovery is financial, it is necessary to install adequate condensation capacity to achieve proper monomer recovery. The additional facilities required to achieve good environmental results by condensation only requires a small additional capital expenditure.

The environmental control at all our facilities are based on condensation technology and satisfies the State agencies in Massachusetts, Ohio and North Carolina. We are confident that condensation technology will enable the emissions for polystyrene facilities to be reduced to below the recommended RACT (Reasonably Available Control Technology) referred to in the CTG of 0.3 kgs per 1000 kgs of product.

The attached information was taken from reports which were approved by the State environmental agency in Worcester, Massachusetts, before the construction of a new Polysar facility for polystyrene manufacture. The technology used in this facility to achieve the emission control levels shown is purely based on the condensation type technology discussed in this letter, and clearly illustrates the ability of this technology to achieve the control required. The data submitted is theoretical and will be further substantiated during the initial operation of the new facility.

Based on the information submitted with this letter concerning the emissions of the latest Polysar facility in Leominster, Massachusetts, I believe it is readily apparent that the use of an incinerator is not required due to the small volume of emissions actually discharged.

In general, the installation and use of an incinerator is an excessive expense in a polystyrene facility, both for purchase and installation of the original equipment and for the operating costs of the installed equipment, and this is illustrated very clearly in the financial analysis which is part of the CTG. The operation of an incinerator for any polystyrene facility would incur a continuous purge of fuel gas to maintain the stability of the flame. This would certainly incur a substantial use of fuel gas on an annual basis and would increase the emissions of carbon monoxide/dioxide and sulphur compounds from the facility. Due to the nature of incinerators, their mode of operation and the associated vapor collection systems, Polysar believes that an inadequately designed and conceived installation could potentially be hazardous to operate and would certainly have significant explosive risks due to the potential for collecting explosive hydrocarbons/air mixtures.

Summary

Due to the nature of the raw materials used in the polystyrene manufacturing process, the use of incinerators for emission control is not required.

Condensation is the control technology most widely used in the industry. This technology is used to recover un-reacted monomer (which is recycled in the process) and to control emissions to within accepted levels.

The needless installation and use of an incinerator will burn fuel gas and will increase the emissions of carbon dioxide, carbon monoxide and sulfur dioxide. The use of an incinerator and the associated vapor collection system may inherently be a potential explosion hazard.

If you have any queries concerning the contents of this letter, or you wish to have further discussions on this matter, please do not hesitate to contact me.

Very truly yours,

POLYSAR INCORPORATED
RESINS DIVISION

Frank J. Mitrano, Manager
Process Development and Engineering

FJM/bb
Attachment

PRE 503-2.4

Mr. Jack R. Farmer, Chief
July 19, 1982

ATTACHMENT

POLYSTYRENE MANUFACTURING
EMISSION CONTROL DATA TAKEN FROM REPORTS SUBMITTED
TO CENTRAL MASSACHUSETTS AIR POLLUTION CONTROL BOARD IN 1981

SOURCE	ANNUAL AVERAGE TEMPERATURE	EMISSION RATE KGS/1000 KG OF PRODUCT
Styrene Storage	60°F	0.0183
Recycle Styrene Storage	60°F	0.0060
Ethyl Benzene Storage	60°F	0.0004
Catalyst Make-Up	At Process Temperature	0.0025
First Reactor	At Process Temperature	0.0396
Main Reactor	At Process Temperature	0.0396
Vacuum Vent	At Process Temperature	0.0109
Finishing Area Vent	At Process Temperature	0.0155
		0.1328 KGS PER 1000 KGS OF PRODUCT

UNITED STATES ENVIRONMENTAL PROTECTION AGENCY

DATE: April 13, 1983 Office of Air Quality Planning and Standards
Research Triangle Park, North Carolina 27711

SUBJECT: Telephone Conversation with Dr. Gerald Madden, E.I., duPont de Nemours and Company, Inc. (Phone No.:(609) 299-1120) Regarding the Use of Catalytic Incinerators for Existing Polymers and Resins Plants.

FROM: James Berry, Chief
Chemical Applications Section, CPB, ESED

TO: Polymers & Resins CTG File

SUMMARY:

Dr. Madden wanted to assure that catalytic incinerators are not preempted from the Polymers & Resins CTG. He feels that the capital cost of catalytic incineration is not prohibitive and welcomes an opportunity to prove it with a comparative study if there was a case for him to bid on. Dr. Madden has made several presentations to ESED (including one on March 12, 1981 regarding the capabilities of the DuPont Torvex Catalytic Reactor.

I said we would review the CTG and see if we felt strongly against catalytic incineration for this application. If so, we would give him the opportunity to disprove us. Otherwise, we will change the CTG to allow catalytic incineration.

APPENDIX C

MAJOR ISSUES AND RESPONSES

APPENDIX C. MAJOR ISSUES AND RESPONSES

The major issues raised in the comment letters on the May 1982 draft of the CTG document are summarized in this appendix, as well as EPA's responses to the comments. (The comment letters themselves are included as Appendix B.) The major issues which are discussed (and the corresponding section of this appendix) are: the inclusion of flares as RACT (C.1); the acceptability of other control devices, such as condensers, catalytic incinerators, absorbers, adsorbers, and process heaters (C.2); the stringency of RACT and 98 percent VOC reduction (C.3); the basis of the cost analysis (C.4); and the scope of the CTG regarding the inclusion of both polystyrene (C.5) and the high density polyethylene liquid phase solution process (C.6). Minor corrections or updates regarding the chemical reaction mechanisms of emissions or the status of individual plants were rectified without further comment by EPA.

C.1 THE INCLUSION OF FLARES AS RACT

Summary of Comments:

Several commenters (the Texas Chemical Council - TCC, the Chemical Manufacturer's Association - CMA, and Gulf Oil Chemicals Co. - Gulf) were of the opinion that flares should be included in RACT as equivalent control to thermal incinerators. TCC felt that flares should be included, especially in light of recent tests by Battelle and John Zink, Co. for EPA (Howes et.al., Chapter 4, Ref. 9). CMA noted the forthcoming joint CMA/EPA flare efficiency study (using the methods developed by Battelle and John Zink, Co.) and suggested that any language precluding the use of flares would be inappropriate especially since they were already acceptable for the SOCMI Distillation NSPS. Gulf remarked that the quantified flare efficiency results of four studies were disregarded. Gulf also disagreed with several statements regarding flares in the draft CTG: (1) that polymer plant flares are

generally for large volume, variable composition emergency blowdowns (p. 3-18) - which Gulf stated is true for high pressure processes, but not for low pressure liquid phase polypropylene (PP) and high density polyethylene (HDPE) production; (2) that good combustion design was questioned due to lack of completely well-defined measurement methods (p. 3-12) - Gulf felt that lack of measurement methods should not detract from design evaluation or the merit of efficiency data; and (3) that variations in flow and heat content of the waste stream could extinquish the flame (p. 5-18) - Gulf was of the opinion that this statement was completely false since continuous pilot flames are used for safety.

Response:

On the basis of the now available results from the joint CMA/EPA flare testing (McDaniel, et al., Chapter 4, Reference 11), flares have been included as RACT capable of achieving 98 percent VOC destruction under certain conditions. This study is the first to use the sampling and chemical analysis method developed by Battelle for EPA and is the first to test efficiency at a variety of non-ideal conditions where lower efficiencies had been predicted. (All previous tests had used easily combustible gases that do not tend to soot.) Although 98 percent VOC reduction efficiency has been demonstrated only for certain prescribed conditions of gas velocity and heat content, existing flares are considered acceptable for RACT in light of the high heat content streams (other than the product finishing streams) generally emitted by the PP and HDPE liquid phase processes.

With regard to Gulf's comments on statements about flares in the CTG, it is agreed that the statement on p. 3-18 that flares are primarily used for large, emergency releases is true for the polymer industry in general, but not for low pressure, PP and HDPE liquid phase process. The statement on p. 3-12, however, is that the individual effects of time, mixing, and temperature on combustion efficiency could not yet be evaluated because measurement methods were not completely well defined. This statement was not intended to infer that information regarding design or efficiency was not available, but that its extent and value was limited. The ongoing CMA/EPA tests use a method that was developed based on the previous studies, and these ongoing tests

are improving and expanding the data base. The remark on p. 5-18 stated that extinguishing the flame of a flare is "conceivable" - not likely. Although it is true that flares with continuous pilots will relight momentarily, all existing flares do not necessarily have continuous pilots or automatic relighting systems such as have come into general use in recent years.

C.2 ACCEPTABILITY OF CONDENSERS, CATALYTIC INCINERATORS, ABSORBERS, AND PROCESS HEATERS AS RACT

Summary of Comments

Various commenters were of the opinion that control devices other than thermal incinerators should be included as RACT. Monsanto, CMA, Gulf, and Polysar commented that condensers were more appropriate RACT for polystyrene manufacture than thermal incinerators because no highly volatile material is present in polystyrene manufacturing so that condensation is less expensive and already in use by the industry. DuPont wanted to ensure that catalytic incinerators were not preempted because DuPont feels the cost is competitive with thermal incineration. Gulf and TCC were concerned that the repeated mention of thermal incineration implied that only thermal incineration was accepted as RACT and that the States would, therefore, not allow alternative control methods such as condensers, process heaters or combinations (Gulf), or absorption or other recovery techniques (TCC). (The inclusion of flares as an alternate control technique was also suggested; this issue was discussed separately in that last section.)

Response:

While the May 1982 draft focused on thermal incinerators it was not intended to give the impression that other control techniques except flares, which were then disallowed, would not be capable of, and thus acceptable for, achieving 98 percent reduction. For example the May 1982 draft CTG (on p. 4-1) set an emission reduction of 98 weight percent VOC for polypropylene and high-density polyethylene plants and an emission limit of 0.3 kg VOC/Mg polystyrene produced and stated that "other control techniques such as refrigerated condensation that can achieve the same degree of control should be considered equivalent and acceptable." The May 1982 draft also stated specifically that "combustion

control devices, such as thermal and catalytic incinerators or boilers and process heaters, can achieve 98 percent VOC destruction efficiency" required for polypropylene and high density polyethylene liquid-phase processes. Therefore, the current CTG has been revised so that alternate control techniques are clearly defined as acceptable RACT if they achieve the appropriate emission reductions or limits.

In addition, this final CTG document has been revised so that alternative control techniques are discussed, cost estimates are presented for not only thermal incinerators but also flares for PP and HDPE, and condensers for PS.

C.3 STRINGENCY OF RACT

Summary of Comments

TCC, CMA, and Gulf questioned the ability of thermal incinerators to achieve 98 percent VOC destruction on a continuous or average basis under normal and realistic design and operating practice. Monsanto specifically questioned the extrapolation of its incinerator test data from acrylonitrile to polymer production, while Gulf questioned the applicability of test data from the CTG for air oxidation processes. TCC agreed that 98 percent VOC reduction was achievable in all new, well designed and well operated incinerators, but believed RACT should be based upon "demonstrated levels in equipment that operates pretty much as designed without elaborate post installation modifications to fine-tune it to maximum (efficiency) levels." TCC also felt that thermal incinerator efficiency should be discounted to more realistic levels since flare efficiency was discounted. CMA was of the opinion that 98 percent reduction was more appropriate for LAER than RACT and was not consistent with other VOC emission limits under development.

Response

The questions regarding the stringency of RACT and the capability of thermal incinerators to realistically achieve 98 percent VOC destruction probably have become superfluous since flares have been accepted as capable of achieving equivalent destruction and they have lower cost so that flares are likely to be used to satisfy RACT, where needed.

However, the state of the art supports that new incinerators can achieve 98 percent reduction if properly designed and operated, as TCC

has acknowledged after discussion with vendors. Also, Petro-tex increased the efficiency of controlling emissions from its Oxo Butadiene process from 70 percent to over 98 percent through relatively low cost (in comparison to total capital cost) modifications that improved mixing. Although the air oxidation process emission test data are of value in assessing incineration capabilities in general, it is true that they do involve other chemicals and processes, some of which, however, would be expected to be more, not less, difficult to control.) Since the May 1982 draft was published, final results became available for EPA emissions testing at a polypropylene facility. The results of this study program showed VOC destruction efficiencies of mixtures of gaseous, liquid, and solid wastes greater than 99.7 percent for temperatures of 1,600°F and greater and 1.5 seconds residence time. Therefore, 98 percent should be readily attainable for 0.75 seconds residence time since kinetic studies show that residence time is beyond 0.5 to 0.75 sec is not a determining factor of reduction efficiency (see p. D36).

In order to ensure that RACT is readily achievable at a reasonable cost, and to avoid giving a competitive disadvantage to already well-controlled facilities (another concern of the TCC), existing incinerators and flares will be considered to achieve RACT without the need for modification or replacement. Also, in order to prevent a potential safety hazard (from combusting high-oxygen content streams) and a potentially unreasonable cost effectiveness, RACT for product finishing and product storage operations was changed from 98 percent to 0.35 kg VOC/Mg product from the extruder on in the manufacturing process (e.g., pelletizing and product storage).

Regarding CMA's comment that RACT is not consistent with the other VOC regulations under development: RACT is not more stringent than the NSPS for PP liquid phase and HDPE liquid phase slurry. The only difference with the SOCMI Distillation NSPS, besides the SOCMI Distillation NSPS's anticipation of the joint CMA/EPA flare testing results is the use of a total resource effectiveness (TRE) index. The SOCMI Air Oxidation CTG also employs a TRE index and exempted streams already controlled by a thermal incinerator. The Polymers and Resins CTG allows States to decide whether to require testing and subsequent

modification or replacement, based on a case-by-case analysis of cost effectiveness.

C.4 BASIS OF COST ANALYSIS

C.4.1 Origin of Costs (GARD vs Enviroscience)

CMA believes that the incinerator cost data used in preparing the Polymers and Resin CTG are "outdated, inaccurate, and inconsistent with the incinerator cost information prepared for the Air Oxidation CTG and New Source Performance (NSPS) activities." Further, they state that these Polymers and Resins CTG cost data, which were obtained from the GARD report,* have been escalated over a 9-year period (from 1972), that the GARD report does not indicate how many data points were used to develop the incinerator cost curves, and that the GARD incinerator design basis (1,500°F combustion temperature and 0.5 second residence time) differs from the Air Oxidation CTG basis (1,600°F and 0.75 to 1.0 seconds). Also, CMA notes that the GARD report predicts annualized costs that are 25 to 35 percent lower than those prepared from the Enviroscience data. Finally, CMA believes "... the Hydroscience (now Environscience) cost data** are more representative of industry experience and should be used as the basis for determining the cost effectiveness of this CTG."

Response:

Because flares, not incinerators, will likely be the control technology employed to meet the CTG emission limits, the CMA comment is effectively academic. Nonetheless, we feel it necessary to respond to certain statements CMA made concerning the quality of the GARD data.

First of all, we disagree with CMA that the Hydroscience (Enviroscience) costs are "more representative" than the GARD data. In actuality, the GARD incinerator costs generally compare well with

---

*"Capital and Operating Costs of Selected Air Pollution Control Systems." R.B. Neverill, GARD, Inc., Niles, Illinois. EPA Report 450/5-80-002. December 1978.

**"Organic Chemical Manufacturing Volume 4: Combustion Devices." IT Environscience, Knoxville, Tennessee. EPA Report-450/3-80-026. December 1980.

the Enviroscience costs. For example, based on the combustion chamber volume, the GARD purchase cost for a thermal incinerator to control one set of vent streams in the CTG is approximately $65,000. The Enviroscience cost for an incinerator of the same size is approximately $54,000. (Both costs are in June 1980 dollars.) Thus, the GARD cost is 20 percent higher. Most of this difference is due to the fact that the GARD cost includes a low-pressure fan, while the Enviroscience cost just includes the combustion chamber. Even so, the differences are small when compared to the nominal accuracy of the CTG and NSPS estimates (30 percent). From this, one can conclude that the two sets of costs are essentially equivalent.

CMA makes additional statements regarding the accuracy of the GARD data. Our responses to these points follow:

1. Although some older references were used in preparing the text for the incinerator section of the report, the costs in GARD are not "nine years old." In fact, most of the data were obtained from a 1976 EPA report prepared by an incinerator vendor.* Additional data were taken from quotations for incinerators installed at GARD's affiliated corporation, GATX Terminals. In any case, more than 20 data points were used to prepare the curves. They were not ". . . . extrapolated from one or two points by the use of scaling factors," as CMA alleges. Moreover, the Enviroscience costs are not that much newer than the GARD, since the former are in December 1979 dollars, while the latter reflect December 1977 data. (Indeed, if CMA has any more current information -- 1982 costs, for instance--we would look forward to seeing it.)
2. CMA provides no documentation for the 25 to 35 percent difference between the GARD and Enviroscience annualized costs. Nonetheless, these differences approximate the ±30 percent accuracy range for these estimates. Further, given the wide variation in the factors for the operating and maintenance costs and capital charges, these differences

*"Report of Fuel Requirements, Capital Cost, and Operating Expense for Catalytic and Thermal Afterburners," CE-Air Preheater/Industrial Gas Institute, Stamford, Conn. EPA Report 450/3-76-031, September 1976.

represent excellent agreement for such "study" estimates. Because these cost factors vary so widely, it is more meaningful to compare the purchased or installed capital costs than the annualized.

3. The differences between the Polymers and Resins and Air Oxidation CTG design parameters are relatively small and impact the purchase costs only about 20 percent. (See Appendix B of Air Oxidation CTG and Appendix E of this CTG.) Moreover, the Enviroscience report "Control Device Evaluation for Thermal Oxidizers" (December 1979) states that a VOC control efficiency of 98 percent or greater is achievable with a 1,500°F combustion temperature, the basis for the GARD costs. Thus, it is likely, although less certain than for 1600°F, that the GARD incinerator can also meet the 98 percent emission reduction alternative listed in the CTG.

To summarize: The GARD and Enviroscience thermal incinerator costs can both meet the costing requirements of the CTG. The differences between the two sets of costs fall within the accuracy limits of the CTG estimates. Further, the GARD data are as current and as well-founded as the Enviroscience costs. Because of this, it makes little technical difference which costs are used in the document. In deference to CMA, thermal incinerator costs in this version of the CTG are based on Enviroscience.

C.4.2. Cost Effectiveness Calculations

TCC noted that existing control levels for eight HDPE slurry and solution process plants varied from - 696 percent (already meeting RACT) to +92 percent of the uncontrolled emission rate for the model plants. TCC, therefore, questioned the validity of the cost effectiveness analyses, especially if the 98 percent reduction were based on uncontrolled model plant levels. Similarly, Monsanto was concerned that the cost effectiveness of RACT for polystyrene would be unreasonably high for plants that were already well controlled.

Response:

TCC's concern about the cost effectiveness of existing plants with varying degrees of control is unwarranted. The 98 percent reduction

would be applied to uncontrolled emission levels for a particular plant. The cost effectiveness is assessed in general by using the uncontrolled and expected existing control levels as the lower and upper bounds of the analysis. However, the streams already controlled by an existing flare or thermal incinerator are no longer required to be controlled further. Therefore, already well controlled plants would be rewarded, even though the calculated cost effectiveness from the revised cost analysis based on Enviroscience is less than $550/Mg for a thermal incinerator and less than $160 for a flare if the same unit were used to reduce from 90 percent (selected arbitrarily to approximate the upper end of the range of existing control levels for which additional control might be required) to 98 percent reduction.

Monsanto's concern regarding the high cost-effectiveness of control for already well-controlled polystyrene manufacturing facilities was evidently based on the misunderstanding that incineration would be required regardless of existing control levels. On the contrary, RACT for polystyrene is defined as an emission limit that can be met by any combination of existing and additional processes and controls. However, thermal incinerators were used as a worst case cost analysis even after the acceptance of the 0.3 kg/Mg emission limit that was based on the use of a condenser. If a plant already has low emissions, cost effectiveness would not increase unreasonably because less control or no control would be required to meet the emission limit.

C.4.3. Miscellaneous

Gulf pointed out several suggestions about details in the cost analysis: the escalation index needs updating; (2) operating labor (including overhead) should be $19.10 rather than $11.10; (3) the interest rate of 10 percent should be updated to 18-20 percent, (4) inclusion of a filter system upstream of the incinerator to remove polymers and entrained liquids, (5) inclusion of operating labor, maintenance labor, and electricity costs for the reciprocating compressor and maintenance labor costs for manifolding, (6) completion of justification of the 90 percent efficiency used for existing flares in assessing reasonableness of retrofit, and (7) consideration of total system cost, not only incinerator cost, for incremental cost effectiveness.

Response:

The following responses are made with respect to Gulf's comments on details of the cost analysis: (1) the revised analysis uses a different and corrected escalation factor; (2) operating labor (including overhead) is now $18 per hour; (3) the interest rate (before taxes) remains at 10 percent because the analysis is in real, constant dollars not considering inflation (even with inflation, 18 to 20 percent interest would be too high at the time of writing this final CTG document), (4) the cost analysis still does not include a filter system because the tested polypropylene plant incinerates liquids and solid atactic waste along with the gases and achieves greater than 99.7 percent VOC reduction; (5) the revised cost analysis includes operating labor and electricity costs for the entire system and the incinerator combustion chamber and includes maintenance costs for manifolding (under source legs and ducts, fans and stack) and compression (fan under duct, fan, and stack); (6) the 90 percent existing flare efficiency, which was used to represent a range of flare efficiencies of existing units (about 70-99 percent), is still used for worst case cost effectiveness calculation purposes to approximate the greatest existing control efficiency for a device, other than a flare or thermal incinerator, that might have to be replaced or augmented. (It is not even certain that all existing flares meet the conditions known to achieve 98 percent VOC reduction according to results of the joint CMA/EPA test program even though they will be considered to satisfy RACT requirements); and (7) the incremental cost effectiveness of the revised cost analysis is correctly based on total system cost.

C.5 SCOPE OF CTG: POLYSTYRENE CONTINUOUS PROCESS

Summary of Comments

Monsanto, CMA, and Polysar questioned the need for polystyrene production to be covered by the CTG. CMA and Monsanto noted in a October 19, 1981, submittal by CMA regarding the NSPS that current typical emission factors were 0.119 to 0.15 kg/Mg, which is about 5 percent of the model plant level of 3.09 kg/Mg, because of economic incentives. Polysar was also confident that condensation could be used to meet the 0.3 kg/Mg emission limit. All commenters were concerned

about the implication that thermal incinerators would be the required control technology in spite of the relatively high cost effectiveness (especially if calculated based on the lower emission factors).

Response

As discussed in C.2, the May 1982 draft CTG suggests the use of condensers to control the major polystyrene vent streams. Since a mass emission limit per production rate is used, the cost effectiveness would not become unreasonable for already well controlled plants. Therefore, in accordance with the industry data and the revised cost analyses for control of polystyrene processes by condensation (which resulted in costs of emission reduction ranging from $-700/Mg to $950/Mg considering a range of current emissions of 0.20 kg/Mg to 3.09 kg/Mg in steam and in air, and vendor or Enviroscience costs) the emission level for polystyrene was reduced to 0.12 kg/Mg. Although most polystyrene plants may already be attaining the RACT emission level, and the consequent emission reduction may be small, polystyrene will be retained in the CTG to ensure uniform control in nonattainment areas across the country so that at least a minimum control level is applied and no unfair competitive advantage results.

C.6 SCOPE OF THE CTG: HIGH DENSITY POLYETHYLENE, LIQUID PHASE SOLUTION PROCESS AND OTHER PROCESSES NOT CURRENTLY INCLUDED

Summary of Comment

TCC presumed that the HDPE, liquid phase solution process was not covered by the CTG since the model plant was based on the slurry (particle form) process and recommended, therefore, that the CTG be revised to clarify that only the slurry process is covered.

Response

The HDPE, liquid phase solution process has been examined for the NSPS since the May 1982 draft CTG. The solution process was concluded to be different from the slurry process in terms of emissions and control. Therefore, the HDPE, liquid phase solution process is not included in the CTG.

Analyses of emissions and control have not been conducted and control techniques guidelines and RACT have not been established for high-density polyethylene liquid phase solution processes or for other

processes (e.g., polypropylene and polyethylene gas phase processes) with a relatively small number of existing plants. However, EPA may subsequently analyze and establish control techniques for any or all of such other processes. In the meantime, a State may choose to conduct its own model plant or case-by-case analysis and establish its own guidelines.

APPENDIX D
EMISSION SOURCE TEST DATA

APPENDIX D: EMISSION SOURCE TEST DATA

The purpose of this appendix is to describe the test results of flare and thermal incinerator volatile organic compounds (VOC) emissions reduction capabilities. Background data and detailed information which support the emission levels and reduction capabilities are included.

Section D.1 of this appendix presents the VOC emissions test data including individual test descriptions for control of process sources by flaring. Sections D.2 and D.3 present the VOC emissions test data for control of process sources by thermal incineration and vapor recovery system, respectively. Section D.4 consists of comparisons of various VOC test results and a discussion exploring and evaluating the similarities and differences of these results.

D.1 FLARE VOC EMISSION TEST DATA

The design and operating conditions and results of the five experimental studies of flare combustion efficiency that have been conducted were summarized in Section 3.1.1.1. This section presents more detailed results of the first flare efficiency emissions test to encompass a variety of "non ideal" conditions that can be encountered in an industrial setting. These results represent only the first phase of an extended study of which a final report should be available by mid-1983.

The aforementioned experimental study was performed during a three week period in June 1982 to determine the combustion efficiency for both air- and steam-assisted flares under different operating conditions. The study was sponsored by the U.S. Environmental Protection Agency and the Chemical Manufacturers Association (CMA). The test facility and flares were provided by the John Zink Company. A total of 23 tests were conducted on the steam-assisted flares and 11 tests

on air-assisted flares. The values of the following parameters were varied: flow rate of flare gas, heating valve of flare gas, flow rate of steam, and flow rate of air. This section describes the control device and the sampling and analytical technique used and test results for the steam-assisted flare.

D.1.1 Control Device.

A John Zink standard STF-S-8 flare tip was used for the steam-assisted flare test series. This flare tip has an inside diameter of 0.22 m (8 5/8 in.) and is 3.7 m (12 ft. 3.5 in.) long with the upper 2.2 m (7 ft 3 in) constructed of stainless steel and the long 1.5 m (5 ft 0.5 in) constructed of carbon steel. Crude propylene was used as the flare gas. The maximum capacity of the flare tip was approximately 24,200 kg/hr (53,300 lb/hr) for crude propylene at 0.8 Mach exit velocity. Variations in heating valves of flare gas were obtained by diluting the propylene with inert nitrogen.

D.1.2 Sampling and Analytical Techniques

An extractive sampling system was used to collect the flare emission samples and transport these samples to two mobile analytical laboratories. Figure D-1 is a diagram of the sampling and analysis system. A specially designed 8.2 m (27 ft) long sampling probe was suspended over the flare flame by support cables from a hydraulic crane.

Gaseous flare emission samples entered the sampling system via the probe tip, passed through the particulate filter, and then were carried to ground level. The sampling system temperature was maintained above 100°C (212°F) to prevent condensation of water vapor. The flare emission sample was divided into three possible paths. A fraction of the sample was passed through an EPA Reference Method 4 sampling train to determine moisture content of the sample. A second fraction was directed through a moisture removal cold trap and thence, into a sampling manifold in one of the mobile laboratories. Sample gas in this manifold was analyzed by continuous monitors for O_2, CO, CO_2, NO_x and THC on a dry sample basis. A third sample was directed into a sampling manifold in the other mobile laboratory. Sample gas in this manifold was analyzed for SO_2 and hydrocarbon species on a wet basis.

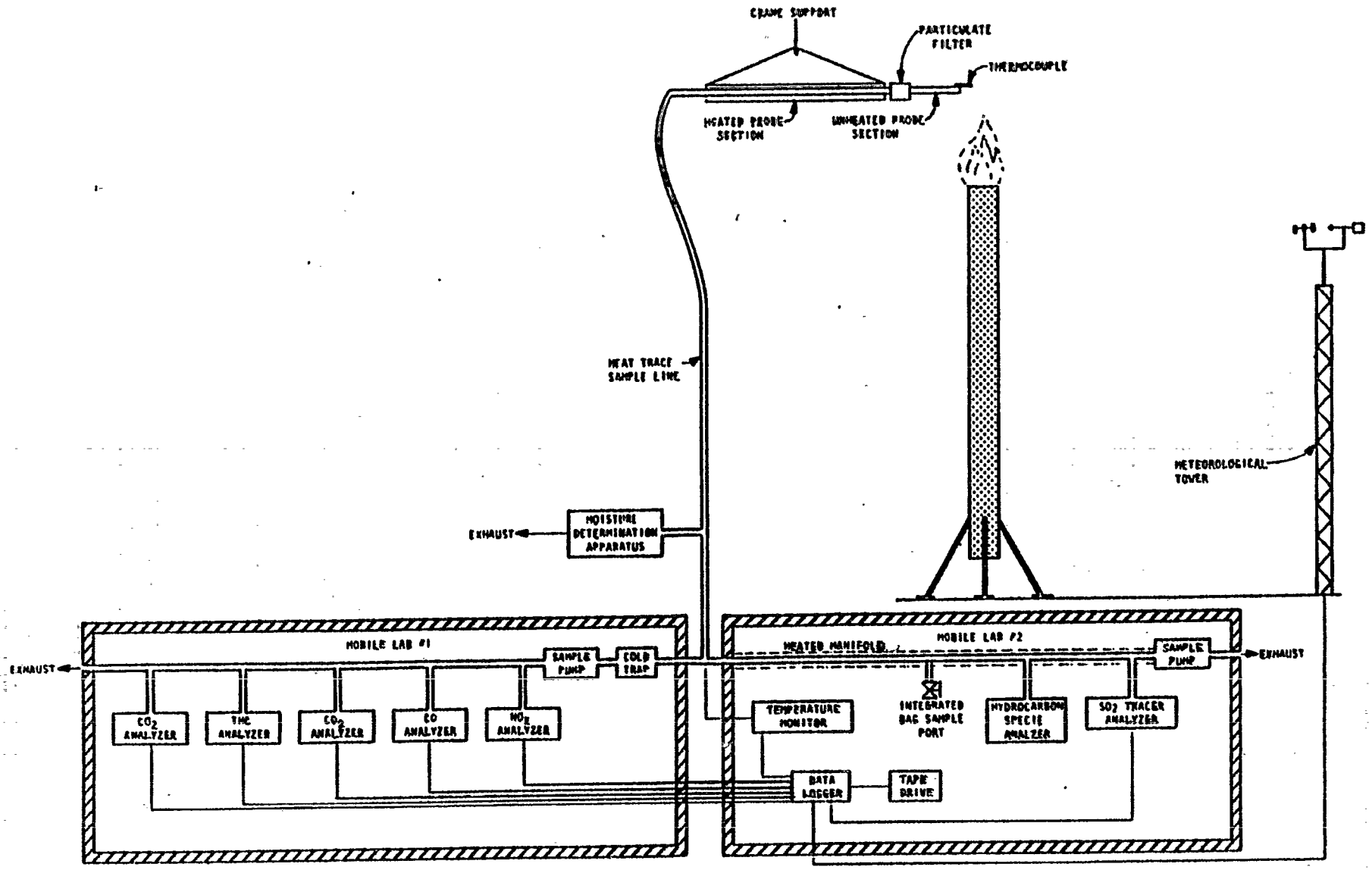

Figure D-1. Flare sampling and analysis system

Data collection continued for each test for a target period of 20 minutes. Ambient air concentrations of the compounds of interest were measured in the test area before and after each test or series of tests.

Flare emission measurements of carbon monoxide (CO), carbon dioxide (CO_2), oxygen (CO_2), oxides of nitrogen (NO_x), total hydrocarbons (THC) and sulfur dioxide (SO_2) were measured by continuous analyzers that responded to real time changes in concentrations. Table D-1 presents a summary of the instrumentation used during the tests.

D.1.3 Test Results

Twenty three tests were completed on the steam-assisted flare. Table D-2 summarizes the results of these tests. The results indicate that the combustion efficiencies of the flare plume are greater than 98 percent under varying condition of flare gas flow rate, including velocities as high as 18.2 m/s (60 fps) flare gas, heat content over 11.2 MJ/m^3 (300 Btu/scf), and steam flow rate below 3.5 units of per unit of flare gas. The concentrations of NO_x emissions which were also measured during the testing ranged from 0.5 to 8.16 ppm.

D.2 THERMAL INCINERATOR VOC EMISSION TEST DATA

The results of six emission tests and one laboratory study were reviewed to evaluate the performance of thermal incinerators under various operating conditions in reducing VOC emissions from the different process waste streams generated during the manufacture of polymers and several synthetic organic chemicals. The variable parameters under which the incinerator tests were performed include combustion temperature and residence time, type of VOC, type and quantity of supplemental fuel, and feedstocks (solid, liquid, and gaseous waste streams). The test results, which are summarized in Table D-3, in combination with a theoretical analysis indicate that high VOC reduction efficiencies (by weight) can be achieved by all new incinerators.

Three sets of test data are available. These are emission tests conducted on (1) incinerators at polymers and resins plants by EPA, (2) incinerators for waste streams from air oxidation processes conducted by EPA or the chemical companies, and (3) laboratory unit data from tests conducted by Union Carbide Company on incinerated streams containing various pure organic compounds. (No adequately documented data were

Table D-1. EMISSION ANALYZERS AND INSTRUMENTATION UTILIZED FOR JOINT EPA/CMA FLARE TESTING

Make and Model	Parameter	Primary Operating Range	Operating Principle
Thermo Electron Model 10	NO_x	0-25 ppm	Chemiluminescence
Horiba PIR 2000	CO	0-1,000 ppm	Infrared absorption
Horiba PIR 2000	CO_2	0-5%	Infrared absorption
Teledyne 320 AX	O_2	0-25%	Electro catalysis
Scott 116	Total hydrocarbon	0-100 ppm	Flame ionization
Carle 211 Gas Chromatograph	Hydrocarbon Species	N/A	Flame ionization
Meloy SA 285 (ES Modified)	Tracer (SO_2)	0-5 ppm	Flame photometry
Climatronics Electronic Weather Station	Wind Speed Wind Direction Ambient Temperature	0-50 mph 0-540° 40-120°F	Photo chopper Precision potentiometer Thermistor
Omega Thermocouple Assembly	Probe Temperature	-300° to 2300°F	Chromel-Alumel exposed bead thermocouple

Table D-2. STEAM-ASSISTED FLARE TESTING SUMMARY

Test Number	FLARE GAS[a] Flow[b] (scfm)	Velocity (ft/min)	Lower Heating Value (Btu/scf)	Propylene Flow (lbs/hr)	Propylene Flow (scfm)	Nitrogen Flow (lbs/hr)	Nitrogen Flow (lbs/hr)	Steam Flow (lbs/hr)	Steam-to-Relief Gas Ratio (lb/lb)	Combustion Efficiency Percent	Comments
1	473	2,523	2,183	3,138	473	-	-	2,159	0.688	99.96	
2	464	2,475	2,183	3,078	464	-	-	1,564	0.508	99.82	
3	456	2,432	2,183	3,027	465	-	-	1,355	0.448	99.82	Incipient smoking flare
4	283	1,509	2,183	1,875	283	-	-	-	-	98.80	Smoking flare
8	157	837	2,183	1,044	157	-	-	-	-	98.81	Smoking flare
7	154	821	2,183	1,019	154	-	-	722	0.757	99.84	Incipient smoking flare
5	149	795	2,183	991	149	-	-	1,543	1.56	99.94	
67	148	789	2,183	980	148	-	-	711	0.725	-	Sampling probe in flame
17	24.5	131	2,183	162	24.5	-	-	150	0.926	99.84	
50	24.4	130	2,183	162	24.4	-	-	498	3.07	99.45	
56	24.5	131	2,183	163	24.5	-	-	562	3.45	99.70	
61	25.0	133	2,183	166	25.0	-	-	941	5.67	82.18	Steam-quenched flame
55	24.7	132	2,183	164	24.7	-	-	1,125	6.86	68.95	Steam-quenched flame
57	703	3,749	294	629	94.8	2,663	608	497	0.150	99.90	
11(a)	660	3,520	305	612	92.2	2,489	568	-	-	99.93	
11(b)	599	3,195	342	623	93.9	2,210	505	-	-	99.86	
11(c)	556	2,965	364	616	92.8	2,028	463	-	-	99.82	
59(a)	591	3,152	192	345	52	2,361	539	-	-	98.11	
59(b)	496	2,645	232	350	52.7	1,942	443	-	-	99.32	
60	334	1,781	298	212	32	1,325	302	-	-	98.92	
51	325	1,733	309	305	46	1,222	279	256	0.168	98.66	
16(a)	320	1,707	339	329	49.6	1,182	270	-	-	99.74	No smoke
16(b)	252	1,344	408	313	46.2	897	205	-	-	99.75	No smoke
16(c)	194	1,035	519	307	46.2	650	148	-	-	99.74	Incipient smoking flare
16(d)	159	848	634	307	46.3	496	113	-	-	99.78	Smoking flare
54	0.356	1.90	209	0.226	0.0341	1.41	0.322	-	-	99.90	
23	0.494	2.63	267	0.451	0.0680	2.13	0.487	-	-	100.01	
52	0.556	2.96	268	0.452	0.0682	2.14	0.488	201	77.5	98.82	
53	0.356	1.90	209	0.226	0.0341	1.41	0.322	201	123	99.40	

[a]All values at standard conditions of 68°F and 29.92 in Hg.

[b]The flare gas flow rates ranged from 473 scfm (approximately 60 percent flare capacity) to 0.35 scfm (purge flow rate).

Table D-3. SUMMARY OF THERMAL INCINERATOR EMISSION TEST RESULTS

Company and Location	Type of Product	Waste Incinerated	Temp. (°F)	Residence Time (seconds)	Efficiency, by weight (%)	Entity	Sampling Runs
Arco Polymers Deer Park, TX	Polypropylene	Waste Gas[a]	1600	1.5	99.83[b]	EPA	2
		Waste Gas[a]	1800	1.5	99.77[c]		2
		Atactic Waste[a]	1600	1.5	99.996[b]		3
		Atactic Waste[a]	1800	1.5	99.985[c]		3
		Atactic Waste[a]	2000	1.5	99.986		1
		Waste Gas + Atactic Waste[a]	1600	1.5	99.995[c]		2
		Waste Gas + Atactic Waste[a]	1800	1.5	99.997[c]		2
		Waste Gas + Atactic Waste[a]	2000	1.5	99.996[c]		2
Denka, Houston, TX	Maleic Anhydride	Waste Gas[d]	1400	0.6	98.5	EPA	5
Rohm & Haas Deer Park, TX	Acrylic Acid & Esters	Waste Gas[d]	1425	1.0	82.6	EPA	3
		Waste Gas[d]	1510	1.0	98.3		4
		Waste Gas[d]	1545	1.0	99.7		1
Union Carbide Corp., Taft, LA	Acrylic Acid & Acrylate Esters	Waste Gas[a]	1160	2-3	96.1	EPA	6
		Waste Gas[a]	1475	2-3	99.9		3
Petro-tex Chemical Corp., Houston, TX	Butadiene	Waste Gas[a]	1400	0.6	99.6[e]	Petro-tex	2 sets
Monsanto Chemical Intermediates, Co., Alvin, TX	Acrylonitrile	Waste Gas[a]	Confidential	Confidential	99	Monsanto	2 units

[a]Supplemented with natural gas to improve combustion.

[b]Average of mean test results measured by each of four methods: proposed EPA Method 18 (on-site) for total hydrocarbons, proposed EPA Method 18 (off-site for individual hydrocarbons, Byron Instruments Models 90 and 401 in combination for total hydrocarbons, and Byron Instruments Models 90 and 401 for total nonmethane hydrocarbons.

[c]Average of mean test results measured by each of three methods: proposed EPA Method 18 (on-site) for total hydrocarbons, Byron Instruments Models 90 and 401 in combination for total hydrocarbons, and Byron Instruments Models 90 and 401 for total nonmethane hydrocarbons.

[d]Supplemented with gas to improve combustion.

[e]Average efficiency for tests after completion of major modifications to improve mixing.

found for tests of incinerators at polymers and resins plants that were conducted by the companies.)

The EPA test studies represent the most in-depth work available. These data show the combustion efficiencies for full-scale incinerators on process vents at four chemical plants. The tests measured inlet and outlet VOC, by compound, at different incineration temperatures. The reports include complete test results, process rates, and descriptions of the test method. The four plants tested by the EPA are:

1. ARCO Polymers, Deer Park, Texas, polypropylene unit,
2. Denka Chemicals, Houston, Texas, maleic anhydride unit,
3. Rohm and Haas, Deer Park, Texas, acrylic acid unit, and
4. Union Carbide, Taft, Louisiana, acrylic acid unit.

The data from ARCO Polymers include test results based on three different incinerator temperatures and three different waste stream combinations. The data from Rohm and Haas also include results for three temperatures. The data from Union Carbide include test results based on two different incinerator temperatures. In all tests, bags were used for collecting integrated samples and a gas chromatagraph with flame ionization detector (GC/FID) was used for obtaining an organic analysis.

D.2.1 Environmental Protection Agency (EPA) Polymers Test Data[2]

EPA conducted emission tests at the incinerator at the ARCO Polymers, Inc., LaPorte polypropylene plant in Deer Park, Texas (listed as ARCO Chemical, Co., in LaPorte, Texas, in the 1982 Directory of Chemical Producers[3]) to assess emission levels and VOC destruction efficiency.

The ARCO polypropylene facility has a nameplate capacity of 181,000 Mg/yr (400 million lbs/yr).[3] The facility produces polypropylene resin by a liquid phase polymerization process. The facility includes two "plants" (Monument I and Monument II) comprised of a total of six process trains producing a variety of polypropylene resins. Both plants discharge their gaseous, liquid, and solid process wastes to the same incinerator system where they undergo thermal destruction. The wastes in the plants occur from:

a) processing chemicals and dilution solvents for the catalyst,

b) spent catalyst,

c) waste polymeric material (by-product atactic polymer), and

d) nitrogen-swept propylene from the final stages (product resin purge columns) of the process.

The feed rates of these wastes to the incinerator vary according to which trains are running and what startups are occurring in the two plants. Feed rate variations were observed during the two weeks of the incinerator test.

The waste heat boiler associated with the incinerator provides a major portion of the process steam needed by the two polymer plants. Natural gas is used as an auxiliary fuel to fire the incinerator. If necessary, fuel oil can also be used. Under full production conditions, the atactic waste provides approximately 50 percent of the energy needed to produce the steam, and natural gas use is reduced.

D.2.1.1 Control Device. The incinerator and associated equipment were designed by John Zink, Company. The system was put into operation on August 16, 1978. The incinerator's two main purposes are to destroy organic waste from the polymer processes (primary) and to provide heat to generate steam (secondary). Figure C-2 depicts a flow diagram of the incinerator and associated equipment. Each inlet stream has its own nozzle inside the incinerator. Combustion air is fed into the incinerator at the burner nozzles located approximately 4 feet beyond the incinerator entrance. The combustion air flow rate is regulated manually. The quench air enters the incinerator within 3 feet of the burner nozzles. It is used to maintain a constant temperature and provide excess combustion air. The quench air flow rate is automatically regulated by an incinerator temperature controller.

During normal operation with all waste streams entering the incinerator, the natural gas is cut back and the atactic waste becomes the major fuel source. The purge gas, which has a low fuel value because it is 95 percent nitrogen, is fed continuously to the incinerator for destruction of the VOC since there is no gas storage capacity in the system. During an upset of the incinerator this stream is sent to a flare. ARCO provided data to illustrate normal operating parameters of the incinerator. These are listed in Table D-4 and represent the

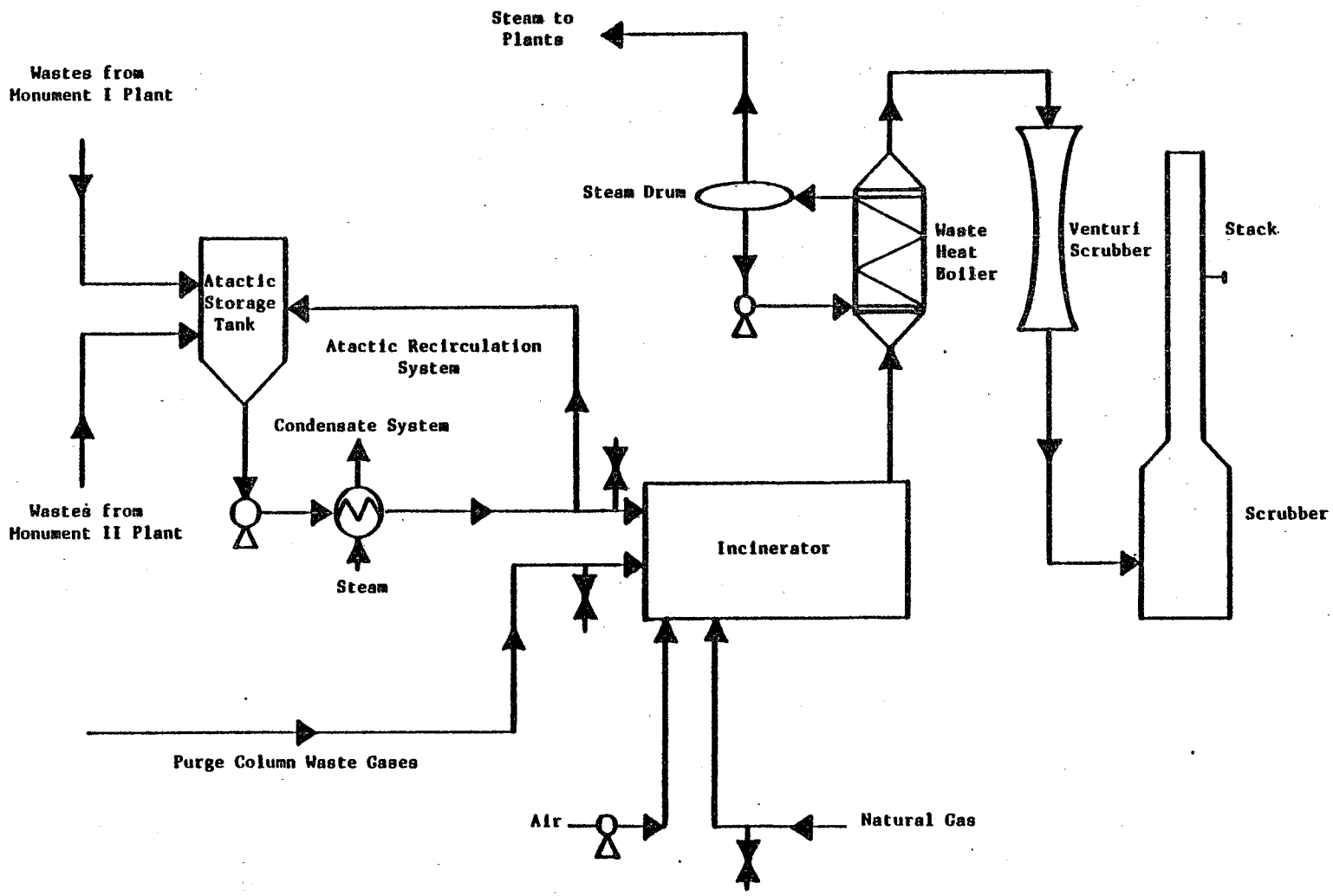

Figure D-2. Schematic of incineration system at ARCO polypropylene facility

Table D-4. TYPICAL INCINERATOR PARAMETERS FOR ARCO POLYMERS EMISSION TESTING BASED ON DATA FROM AUGUST 1981
(Provided by ARCO Chemical Company from process data)[3]

Parameter		Waste Liquid to Incinerator from Monument I Plant	Waste Liquid to Incinerator from Monument II Plant	Waste Gas to Incinerator from Monument I & II Plants	Atactic Waste Recirculation from Monument I & II Plants
Temperature:	Range	60-68°C(140-155°F)	52-60°C(125-140°F)	107-116°C(225-240°F)	66-71°C(150-160°F)
Pressure:	Average	-	-	-	585 kPa(85 psig)
	Range	960-1,030 kPa(140-150 psig)	998-1,070 kPa(145-155 psig)	21-41 kPa(3-6 psig)	-
	Maximum	-	-	-	860 kPa(125psig)
Steam Rate:	Average	-	-	0	-
	Maximum	-	-	-	-
Air Flow:	Average	-	-	-	-
	Maximum	-	-	-	-
Nitrogen Flow:	Range	-	-	0.047-0.062 m^3/sec (6,000-8,000 scfh)	-
Organic Solids:	Average	41.2 g/sec(327 lb/hr)	51.8 g/sec(411 lb/hr)	-	-
Organic Liquids:	Average	32.7 g/sec(259 lb/hr)	32.7 g/sec(259 lb/hr)	-	126 g/sec(1,000 lb/hr)
Organic Gases:	Average	3.9 g/sec(31 lb/hr)	4.4 g/sec(35lb/hr)	-	-
	Range	-	-	11-13 g/sec(90-100 lb/hr) (propylene)	-

Table D-4. TYPICAL INCINERATOR PARAMETERS FOR ARCO POLYMERS EMISSION TESTING BASED ON DATA FROM AUGUST 1981 (Concluded)
(Provided by ARCO Chemical Company from process data)[3]

Parameter		Atactic Waste to Incinerator	Combustion and Quench Air to Incinerator	Natural Gas to Incinerator[a]	Steam Production from Waste Heat Boiler	Waste Heat Boiler Outlet -VOC Sampling Point-
Temperature:	Average	-	41°C(105°F)	29°C(85°F)	193°C(380°F)	211°C(412°F)
	Range	66-68°C(150-155°F)	-	-	-	-
Pressure:	Average	413 kPa(60 psig)	-	-	1,240 kPa(180 psig)	-
	Range	-	-	34-69 kPa(5-10 psig)	-	8.5-18 kPa(34-71 in.H_2O)[b]
	Maximum	-	-	-	-	-
Steam Rate:	Average	-	-	-	3,250 g/sec(25,800 lb/hr)	-
	Maximum	-	-	-	6,680 g/sec(53,000 lb/hr)	-
Air Flow:	Average	-	11.34 m^3/sec(24,000 scfm)	-	-	-
	Maximum	-	16.02 m^3/sec(34,000 scfm)	-	-	-
Nitrogen Flow:	Range	-	-	-	-	-
Organic Solids:	Average	-	-	-	-	-
Organic Liquids:	Average	-	-	-	-	-
Organic Gases:	Average	-	-	-	-	-
	Range	-	-	0.079-0.118 m^3/sec (10,000-15,000 scfh)[c]	-	-

[a]Number 6 fuel oil can be substituted for natural gas.

[b]During test period, this pressure was 10" H_2O.

[c]Cut back during Atactic Waste incineration.

averages for the month of August 1981. The following are considered design parameters:

a) heat input ≈2.18 MJ/s (7.45 x 10^6 Btu/hr),

b) air supply ≈15.1 standard m^3/s at 0°C (33,900 scfm, at 60°F)

c) firebox temperature ≈980°C average and 1,200°C maximum (1,800°F average and 2,200°F maximum),

d) firebox residence time ≈1.5 seconds, and

e) pressure ≈19 kPa (78 in. H_2O).

D.2.1.2 Sampling and Analytical Techniques. A secondary purpose of the ARCO incinerator test was to compare results of different analytical methods for to the measurement of VOC emissions. During the testing phase of this program, three different methods were used for the collection and analysis of hydrocarbons. These were:

a) EPA Method 25,

b) Proposed EPA Method 18 (both on-site and off-site analyses performed), and

c) Byron instruments Model 90 sample collection system and Model 401 hydrocarbon analyzer sampling system and instrument combination.

To characterize the VOC destruction efficiency across the thermal incinerator, liquid, solid, and gas phase sampling was performed. The sampling locations were:

a) Incinerator inlet - waste gas stream
- natural gas stream
- atactic waste stream

b) Waste heat boiler outlet, and

c) Scrubber stack outlet (volumetric flow rate).

The sampling system used for Method 25 consisted of a mini-impinger moisture knockout, a condensate trap, flow control system, and a sample tank. Both pre- and post-sampling leak tests were performed to ensure sample integrity. In the case of Method 18, samples were collected using a modification of EPA Method 110 for benzene. This modification was necessary due to the high moisture content of the incinerator gases and the positive pressure of the emissions. To ensure that a representative, integrated sample was collected using the modified Method 18, three validation tests for sample flow rate and sample volume into the Tedlar bag were performed.

The principle underlying the Byron method is the same as EPA Method 25. However, rather than using a modified standard GC, the Byron method uses a process analyzer. This instrument speciates C_2 from higher hydrocarbons, but gives a single value for all nonmethane hydrocarbons. After separation, all carbonaceous material is combusted to CO_2 which is then converted to CH_4 before being measured by an FID. Thus, the variable response of the FID to different types of organics is eliminated in the Byron 401 as it is in EPA Method 25.

The oxides of nitrogen (NO_x) content of the flue gas was determined using the methodology specified in EPA Method 7. A detailed description of all these sampling and analytical techniques can be found in the ARCO test report.

The total flue gas flow rate was determined two or three times daily using procedures described in EPA Method 2. Based on this method, the volumetric gas flow rate was determined by measuring the cross-sectional area of the stack and the average velocity of the flue gas. The area of the stack was determined by direct measurements.

The work performed during this program incorporated a comprehensive quality assurance/quality control (QA/QC) program as an integral part of the overall sampling and analytical effort. The major objective of the QA/QC program was to provide data of known quality with respect to completeness, accuracy, precision, representativeness, and comparability.

D.2.1.3 Test Results. The VOC measurements were made by at least four of five independent methods for each of eight different combinations of incinerator temperature and waste streams. Table D-5 summarizes the results of measured destruction efficiencies (DE's) for each of these conditions.

The results indicate that the values for the DE's by Method 25 are consistently lower and of poorer quality. The poorer quality is indicated by the imprecision reflected by the much larger standard deviations for this measurement method. The accuracy and representativeness of these values obtained from Method 25 is, thus, questionable. If Method 25 results are disregarded, the DE's for all testing combinations are found to be consistently above 99 percent.

Table D-5. ARCO POLYMERS INCINERATOR DESTRUCTION EFFICIENCIES FOR EACH SET OF CONDITIONS

	Percent Destruction Efficiency[a] Calculated for Each Method				
Conditions[b]	Method 18 (on-site) HC[c]	Byron THC[d]	Byron NMHC[e]	Method 25[f]	Method 18 (off-site) Speciated HC[g]
AW/NG/WG 2,000°F	>99.99777 ± .00008	99.994 ± .002	99.997 ± .002	99.844 ± .006	
AW/NG/WG 1,800°F	>99.9979 ± .0004	99.996 ± .001	99.998 ± .001	99.8 ± .4	
AW/NG/WG 1,600°F	>99.99721 ± .00009	99.9961 ± .0003	99.9957 ± .0002	99.6 ± .2	
NG/WG 1,800°F	99.8 ± .1	99.9 ± .1	99.6 ± .4	76 ± 20	
NG/WG 1,600°F	>99.76 ± .07	99.8 ± .10	99.88 ± .04	66 ± 10	99.88 ± .04
AW/NG 2,000°F	99.99674 ± .00007	99.9941 ± .0001	99.99796 ± .00005	96.32 ± .08	
AW/NG 1,800°F	>99.990 ± .004	99.983 ± .007	99.983 ± .007	98 ± 3	
AW/NG 1,600°F	>99.9975 ± .0001	99.994 ± .002	99.995 ± .003[h]	99 ± 1	99.9979 ± .0001

[a]Percent destruction efficiency = $100 - \frac{\text{gC in Stack gas}}{(\text{gC in Atactic Waste} + \text{gC in Waste Gas})}$

where: gC = grams of organic carbon
The number following the ± sign is the standard deviation (statistically expected true value would fall between the reported value minus the standard deviation and the reported value plus the standard deviation).

[b]Conditions of test given are materials burned and the temperature of the incinerator. Material codes are AW = Atactic Waste, NG = Natural Gas, and WG = Waste Gas. Incinerator design parameters are about 2.18 MJ/s (7.45 MMBtu/hr), 15.1 sm^3/s (33,900 scfm) air supply, 980°C; 1200°C(1800°F; 2200°F maximum) firebox temperature, 1.5 seconds residence time, and 19 kPa (78 in. H_2O pressure).

[c]Measured using proposed EPA Method 18 (on-site) for hydrocarbons (HC) utilizing gas chromatography (GC) with a flame ionization detector (FID). The values with "greater than" signs (>) indicate that the VOC was below the detectable limit and the detection level was used to calculate the DE's.

[d]Measured using the Byron Instruments Model 90 sample collection system and the Bryon Model 401 Hydrocarbon Analyzer sampling system and instrument combination (utilizing reduction to methane and FID) in the total hydrocarbon (THC) mode.

[e]Measured using the Byron Models 90 and 401 combination (utilizing reduction to methane and FID) in the nonmethane hydrocarbon mode.

[f]Measured using EPA Method 25 for total gaseous nonmethane organics (TGNMO) utilizing GC-FID. Data not believed to represent true values.

[g]Measured using proposed EPA Method 18 (off-site) for individual hydrocarbon species utilizing GC-FID.

[h]Difficulties with analysis - Based on most probable value.

D.2.2 Environmental Protection Agency (EPA) Air Oxidation Unit Test Data

The EPA test study represents the most in-depth work available for full-scale incinerators on air oxidation vents at three chemical plants. Data includes inlet/outlet tests on three large incinerators. The tests measured inlet and outlet VOC concentrations by compound for different incinerator temperatures. The referenced test reports include complete test results, process rates, and test method descriptions. The three plants tested are Denka's maleic anhydride unit in Houston, Texas, Rohm and Haas's acrylic acid unit in Deer Park, Texas, and Union Carbide's acrylic acid unit in Taft, Louisiana. The data from Union Carbide include test results for two different incinerator temperatures. The data from Rohm and Haas include results for three temperatures. In all tests, bags were used for collecting integrated samples and a GC/FID was used for organic analysis.

D.2.2.1 Denka Test Data.[4] The Denka maleic anhydride facility has a nameplate capacity of 23 Gg/yr (50 million lbs/yr). Maleic anhydride is produced by vapor-phase catalytic oxidation of benzene. The liquid effluent from the absorber, after undergoing recovery operations, is about 40 weight percent aqueous solution of maleic acid. The absorber vent is directed to the incinerator. The thermal incinerator has a primary heat recovery system to generate process steam and uses natural gas as supplemental fuel. The plant was operating at about 70 percent of capacity when the sampling was conducted. The plant personnel did not think that the lowered production rate would seriously affect the validity or representativeness of the results.

1. Control Device. The size of the incinerator combustion chamber is 204 m^2 (2,195 ft^2). There are three thermocouples used to sense the flame temperature, and these are averaged to give the temperature recorded in the control room. A rough sketch of the combustion chamber is provided in Figure D-3.

2. Sampling and Analytical Techniques. Gas samples of total hydrocarbons (THC), benzene, methane, and ethane were obtained according to the September 27, 1977, EPA draft benzene method. Seventy-liter aluminized Mylar^R bags were used to collect samples over periods of

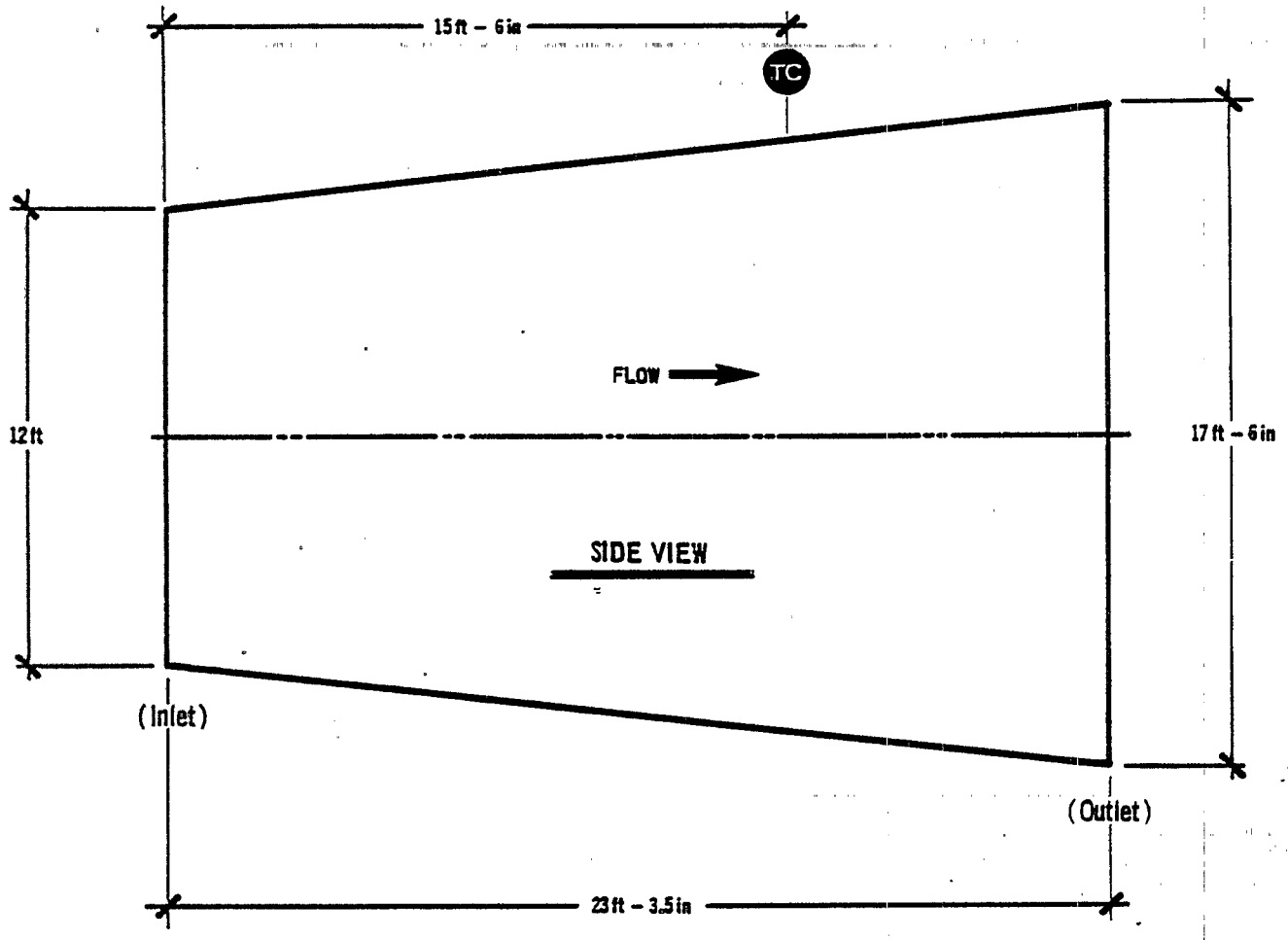

There are Three Thermocouples Spaced Evenly Across the Top of the Firebox.

The Width of the Firebox is 6 ft – 6 in.

Figure D-3. Incinerator Combustion Chamber

two to three hours for each sample. The insulated sample box and bag were heated to approximately 66°C (150°F) using an electric drum heater. During Run 1-Inlet, the rheostat used to control the temperature malfunctioned so the box was not heated for this run. A stainless steel probe was inserted into the single port at the inlet and connected to the gas bag through a "tee." The other leg of the "tee" went to the total organic acid (TOA) train. A Teflon[R] line connected the bag and the "tee." A stainless steel probe was connected directly to the bag at the outlet. The lines were kept as short as possible and not heated. The boxes were transported to the field lab immediately upon completion of sampling. They were heated until the GC analyses were completed.

A Varian model 2440 gas chromatograph with a Carle gas sampling valve, equipped with matched 2 cm^3 loops, was used for the integrated bag analysis. The SP-1200/Bentone 34 GC column was operated at 80°C (176°F). The instrument has a switching circuit which allows a bypass around the column through a capillary tube for THC response. The response curve was measured daily for benzene (5, 10, and 50 ppm standards) with the column and in the bypass (THC) mode. The THC mode was also calibrated daily with propane (20, 100, and 2000 ppm standards). The calibration plots showed moderate nonlinearity. For sample readings that fell within the range of the calibration standards, an interpolated response factor was used from a smooth curve drawn through the calibration points. For samples above or below the standards, the response factor of the nearest standard was assumed. THC readings used peak height and column readings used area integration measured with an electronic "disc" integrator.

Analysis for carbon monoxide was done on samples drawn from the same integrated gas sample bag used for the THC, benzene, methane, and ethane analyses. Carbon monoxide analysis was done following the GC analyses using EPA Reference Method 10 (Federal Register, Vol. 39, No. 47, March 8, 1974). A Beckman Model 215 NDIR analyzer was used to analyze both the inlet and outlet samples.

Duct temperature and pressure values were obtained from the existing inlet port. A thermocouple was inserted into the gas sample

probe for the temperature while a water manometer was used for the pressure readings. These values were obtained at the conclusion of the sampling period.

Temperature, pressure, and velocity values were obtained for the outlet stack. Temperature values were obtained by a thermocouple during the gas sampling. Pressure and velocity measurements were taken according to EPA Reference Method 2 (Federal Register, Vol. 42, No. 160, August 18, 1977). These values also were obtained at the conclusion of the sampling period.

3. Test Results - The Denka incinerator achieved greater than 98 percent reduction at 760°C (1400°F) and 0.6 second residence time. These results suggest that 98 percent control is achievable by properly maintained and operated incinerators under operating conditions less stringent than 870°C (1600°F) and 0.75 second. Table D-6 provides a summary of these test results.

D.2.2.2 Rohm and Haas Test Data[5]. The Rohm and Haas plant in Deer Park, Texas, produces acrylic acid and ester. The capacity of this facility has been listed at 181 Gg/yr (400 million lbs/yr) of acrylic monomers. Acrylic esters are produced using propylene, air, and alcohols, with acrylic acid produced as an intermediate. Acrylic acid is produced directly from propylene by a vapor-phase catalytic air oxidation process. The reaction product is purified in subsequent refining operations. Excess alcohol is recovered and heavy end by-products are incinerated. This waste incinerator is designed to burn offgas from the two absorbers. In addition, all process vents (from extractors, vent condensers, and tanks) that might be a potential source of gaseous emissions are collected in a suction vent system and normally sent to the incinerator. An organic liquid stream generated in the process is also burned, thereby providing part of the fuel requirement. The remainder is provided by natural gas.

1. Control Device - Combustion air is added to the incinerator in an amount to produce six percent oxygen in the effluent. Waste gases are flared during maintenance shutdowns and severe process upsets. The incinerator unit operates at relatively shorter residence times (0.75-1.0 seconds) and higher combustion temperatures (650° - 850°C) [1200°-1560°F] than most existing incinerators.

Table D-6. AIR OXIDATION UNIT THERMAL INCINERATOR FIELD TEST DATA

Company & Location	Type of Process	Waste Gas Flow Rate[a] (scfm)	Set Number (Number of Tests)	Test Date	Supplemental Fuel and Amount Used (scfm)	Residence Time (seconds)	Temp. °F	VOC Concentration (ppm) Inlet	VOC Concentration (ppm) Outlet	VOC Destruction Efficiency, by weight (%)
					Natural Gas					
Denka, Houston, TX	Maleic Anhydride	33,000[b]	3	3/21/78	1060 (gas)	0.6	1400	950	13	98.5
				3/22/78	1060	0.6	1400	950	13	98.5
				3/23/78	1060	0.6	1400	950	13	98.5
Rohm & Haas, Deer Park, TX	Acrylic Acid & Esters	52,500[c]	Set 1 (3)	3/78	900 (gas)	1.0	1425	TVF[c] 2,580 OXV[c] 11,600	1330	82.6
			Set 2 (4)	3/78	900	1.0	1510	TVF[c] 2,600 OXV[c] 12,800	150	98.3
			Set 3 (1)	3/78	900	1.0	1545	TVF[c] 2,410 OXV[c] 12,200	25	99.7
Union Carbide Corp. Taft, LA	Acrylic Acid & Acrylate Esters	20,600	Set 1 (6)	12/78	Natural Gas	2-3	1160	11,900	243	96.1
			Set 2 (3)	12/78		2-3	1475	11,900	10	99.9
Petro-Tex Chemical Corp., Houston, TX	Butadiene	7,250[d]	Set 1	5/25/77	1400	0.6	1400	10,300	1000	70.3
		15,617[d]	Set 2	9/09/77	1467	0.6	1400	10,650	215	94.1
		20,750[d]	Set 3	12/01/77	900	0.6	1400	10,650	215	94.1
		15,867[d]	Set 4	4/19/78	1175	0.6	1400	10,300	10	99.6
		12,500[d]	Set 5	9/27/78	1176	0.6	1400	10,300	10	99.6
Monsanto Chemical Intermediates Co., Alvin, TX	Acrylonitrile	75,000[f]	Unit 1	12/16/77	Natural Gas	NA[e]	Confidential	Confidential	25	99
			Unit 2	12/16/77		NA[e]			47	99

[a]At production capacity.

[b]At 70 percent rather than 100 percent of total capacity.

[c]Total waste gas flow rate of 52,500 scfm comprised of 12,500 scfm from tank farm vent (TVF) and 40,000 scfm from oxidizer vent (OXV).

[d]Average combustion air was 49,333 scfm.

[e]Not available.

[f]Average.

The total installed capital cost of the incinerator was $4.7 million. The estimated operating cost due to supplemental natural gas use is $0.9 million per year.

2. Sampling and Analytical Techniques - Samples were taken simultaneously at a time when propylene oxidations, separations, and esterifications were operating smoothly and the combustion temperature was at a steady state. Adequate time was allowed between the tests conducted at different temperatures for the incinerator to achieve steady state. Bags were used to collect integrated samples and a GC/FID was used for organic analysis.

3. Test Results - VOC destruction efficiency was determined at three different temperatures and a residence time of 1.0 second at each temperature. The test results are summarized in Table C-6. Efficiency is found to increase with temperature and, except for 774°C (1425°F), is above 98 percent. Theoretical calculations show that greater efficiency would be achieved at 870°C (1600°F) and 0.75 second than at the longer residence times but lower temperatures represented in these tests.

D.2.2.3 Union Carbide Corporation (UCC) Test Data[6]. The total capacity for the UCC acrylates facilities is about 90 Gg/yr (200 million lbs/yr) of acrolein, acrylic acid, and esters. Acrylic acid comprises 60 Gg/yr (130 million lbs/yr) of this total. Ethyl acrylate capacity is 40 Gg/yr (90 million lbs/yr). Total heavy ester capacities (such as 2-ethyl-hexyl acrylate) are 50 Gg/yr (110 million lbs/yr). UCC considers butyl acrylate a heavy ester.

The facility was originally built in 1969 and utilized British Petroleum technology for acrylic acid production. In 1976 the plant was converted to a technology obtained under license from Sohio.

1. Control Device - The thermal incinerator is one of the two major control devices used in acrylic acid and acrylate ester manufacture. The UCC incinerator was installed in 1975 to destroy acrylic acid and acrolein vapors. This unit was constructed by John Zink Company for an installed cost of $3 million and incorporates a heat recovery unit to produce process steam at 4.1 MPa (600 psig). The unit operates at a relatively constant feed input and supplements the varying flow and

fuel value of the streams fed to it with inversely varying amounts of fuel gas. Energy consumption averages 15.5 MJ/s (52.8 million Btu/hr) instead of the designed level of 10.5 to 14.9 MJ/s (36 to 51 million Btu/hr). The operating cost in 1976, excluding capital depreciation, was $287,000. The unit is run with nine percent excess oxygen instead of the designed three to five percent excess oxygen. The combustor is designed to handle a maximum of four percent propane in the oxidation feed.

The materials of construction of a nonreturn block valve in the 4.1 MPa (600 psig) steam line from the boiler section require that the incinerator be operated at 650°C (1200°F) instead of the designed 980°C (1800°F). The residence time is three to four seconds.

2. Sampling and Analytical Techniques - The integrated gas samples were obtained according to the September 27, 1977, EPA draft benzene method.

Each integrated gas sample was analyzed on a Varian Model 2400 gas chromatograph with FID, and a heated Carle gas sampling valve with matched 2-cm^3 sample loops. A valved capillary bypass is used for total hydrocarbon (THC) analyses and a 2 m long, 3.2 mm (1/8-in.) outer diameter nickel column with PORAPAK^R P-S, 80-100 mesh packing is used for component analyses.

Peak area measurements were used for the individual component analyses. A Tandy TRS-80, 48K floppy disc computer interfaced via the integrator pulse output of a Linear Instruments Model 252A recorder acquired, stored, and analyzed the chromatograms.

The integrated gas samples were analyzed for oxygen and carbon dioxide by duplicate Fyrite readings. Carbon monoxide concentrations were obtained using a Beckman Model 215A nondispersive infrared (IR) analyzer using the integrated samples. A three-point calibration (1000, 3000, and 10,000 ppm CO standards) was used with a linear-log curve fit.

Stack traverses for outlet flowrate were made using EPA Methods 1 through 4 (midget impingers) and NO_x was sampled at the outlet using EPA Method 7.

3. Test Results - VOC destruction efficiency was determined at two different temperatures. Table D-6 provides a summary of these test results. Efficiency was found to increase with temperature. At (800°C) 1475°F, the efficiency was well above 99 percent. These tests were, again, for residence times greater than 0.75 second. However, theoretical calculations show that even greater efficiency would be achieved at 870°C (1600°F) and 0.75 second than at the longer residence times but lower temperatures represented in these tests.

All actual measurements were made as parts per million (ppm) of propane with the other units reported derived from the equivalent values. The values were measured by digital integration.

The incinerator combustion temperature for the first six runs was about 630°C (1160°F). Runs 7 through 9 were made at an incinerator temperature of about 800°C (1475°F). Only during Run 3 was the acrolein process operating. The higher temperature caused most of the compounds heavier than propane to drop below the detection limit due to the wide range of attenuations used, nearby obscuring peaks, and baseline noise variations. The detection limit ranges from about 10 parts per billion (ppb) to 10 ppm, generally increasing during the chromatogram, and especially near large peaks. Several of the minor peaks were difficult to measure. However, the compounds of interest, methane, ethane, ethylene, propane, propylene, acetaldehyde, acetone, acrolein, and acrylic acid, dominate the chromatograms. Only acetic acid was never detected in any sample.

The probable reason for negative destruction efficiencies for several light components is generation by pyrolysis from other components. For instance, the primary pyrolysis products of acrolein are carbon monoxide and ethylene. Except for methane and, to a much lesser extent, ethane and propane, the fuel gas cannot contribute hydrocarbons to the outlet samples.

A sample taken from the inlet line knockout trap showed 6 mg/g of acetaldehyde, 25 mg/g of butenes, and 100 mg/g of acetone when analyzed by gas chromatography/flame ionization detection (GC/FID).

D.2.3 Chemical Company Air Oxidation Unit Test Data

These data are from tests performed by chemical companies on incinerators at two air oxidation units: the Petro-Tex oxidative

butadiene unit at Houston, Texas, and the Monsanto acrylonitrile unit at Alvin, Texas. Tests at a third air oxidation unit, the Koppers maleic anhydride unit at Bridgeville, Pennsylvania,[7] were disregarded as not accurate because of poor sampling technique.[8]

D.2.3.1 Petro-Tex Test Data[9]. The Petro-Tex Chemical Corporation conducted emission testing at its butadiene production facility in Houston, Texas, during 1977 and 1978. This facility was the "Oxo" air oxidation butadiene process. The emission tests were conducted during a period when Petro-Tex was modifying the incinerator to improve mixing and, thus, VOC destruction efficiency.

1. Control Device - The Petro-Tex incinerator for the 'Oxo' butadiene process is designed to treat 48,000 scfm waste gas containing about 4000 ppm hydrocarbon and 7000 ppm carbon dioxide. The use of the term hydrocarbon in this discussion indicates that besides VOC, it may include nonVOC such as methane. The waste gas treated in this system results from air used to oxidize butene to butadiene. After butadiene has been recovered from air oxidation waste gas in an oil absorption system, the remaining gas is combined with other process waste gas and fed to the incinerator. The combined waste gas stream enters the incinerator between seven vertical Coen duct burner assemblies. The incinerator design incorporates flue gas recirculation and a waste heat boiler. The benefit achieved by recirculating flue gas is to incorporate the ability to generate a constant 100,000 lbs/hr of 750 psi steam with variable waste gas flow.[10] The waste gas flow can range from 10 percent to 100 percent of the design production rate.

The incinerator measures 72 feet by 20 feet by 8 feet, with an average firebox cross-sectional area of 111 square feet. The installed capital cost was $2.5 million.

The waste gas stream contains essentially no oxygen; therefore, significant combustion air must be supplied. This incinerator is fired with natural gas which supplies 84 percent of the firing energy. The additional required energy is supplied by the hydrocarbon content of the waste gas stream. Figure D-4 gives a rough sketch of this unit.

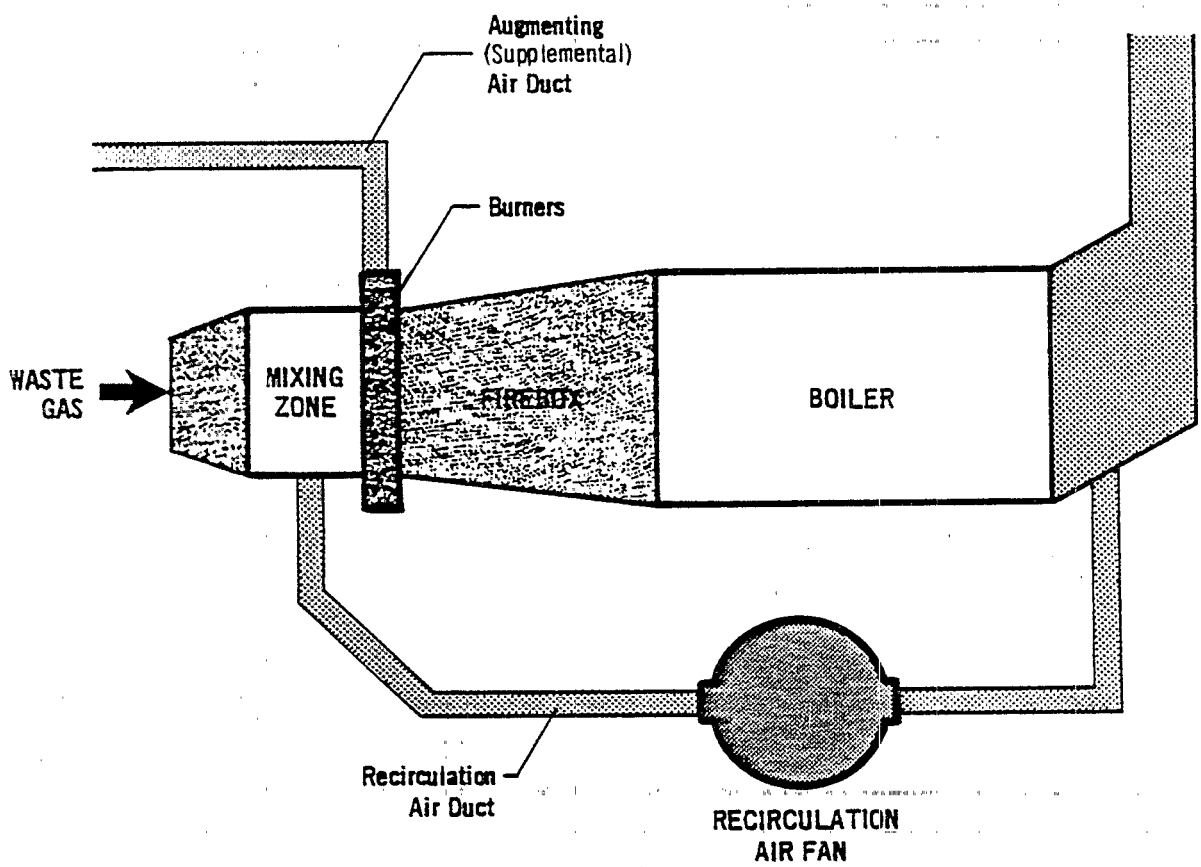

Figure D-4. Petro-Tex oxo unit incinerator.

2. Sampling and Analytical Techniques. Integrated waste gas samples were collected in bags. The analysis was done on a Carle analytical gas chromatograph having the following columns:

1. 6-ft OPN/PORASIL^R (80/100).
2. 40-ft 20 percent SEBACONITRILE^R on gas chrom. RA 42/60.
3. 4-ft PORAPAK^R N 80/100.
4. 6-ft molecular sieve bx 80/100.

Stack gas samples were collected in 30 to 50 cc syringes via a tee on a long stainless steel probe, which can be inserted into the stack, at nine different locations. They were then transferred to a smaller 1 cm^3 syringe via a small glass coupling device sealed at both ends with a rubber grommet. The 1-cm^3 samples were injected into a Varian 1700 chromatograph for hydrocarbon analysis. The chromatograph has a 1/8-in. x 6-ft column packed with 5A molecular sieves and a 1/4-in. x 4-ft column packed with glass beads connected in series with a bypass before and after the molecular sieve column, controlled by a needle valve to split the sample. The data are reported as ppm total HC, ppm methane, and ppm non-methane hydrocarbons (NMHC). The CO content in the stack was determined by using a Kitagawa sampling probe. The O_2 content in the stack was determined via a Teledyne O_2/combustible analyzer.

3. Test Results. Petro-Tex has been involved in a modification plan for its 'Oxo' incinerator unit after startup. The facility was tested by the company after each major modification to determine the impact of these changes on the VOC destruction efficiency. The incinerator showed improved performance after each modification and the destruction efficiency increased from about 70 percent to above 99 percent. Table D-4 provides a summary of these test results. The modifications made in the incinerator are described below.

November 1977

Test data prior to these changes showed the incinerator was not destroying hydrocarbons as well as it should (VOC destruction efficiency as low as 70 percent), so the following changes were made:

1. Moved the duct burner baffles from back of the burner to the front;

2. Installed spacers to create a continuous slot for supplemental air to reduce the air flow through the burner pods;

3. Installed plates upstream of the burners so that ductwork matches burner dimensions;

4. Cut slots in recycle duct to reduce exit velocities and improve mixing with Oxo waste gas;

5. Installed balancing dampers in augmenting (supplemental) air plenums, top and bottom;

6. Installed balancing dampers in three of the five sections of the recycle duct transition; and

7. Cut opening in the recirculation duct to reduce the outlet velocities.

March 1978

After the November changes were made, a field test was made in December 1977, which revealed that the incinerator VOC destruction efficiency increased from 70.3 percent to 94.1 percent. However, it still needed improvement. After much discussion and study the following changes were made in March 1978:

1. Took the recirculation fan out of service and diverted the excess forced draft air into the recirculation duct;

2. Sealed off the 14-cm (5-1/2-in.) wide slots adjacent to the burner pods and removed the 1.3 cm (1/2-in.) spacers which were installed in November 1977;

3. Installed vertical baffles between the bottom row of burner pads to improve mixing;

4. Installed perforated plates between the five recirculation ducts for better waste gas distribution in the incinerator; and

5. Cut seven 3-in. wide slots in the recycle duct for better secondary air distribution.

July 1978

After the March 1978 changes, a survey in April 1978, showed the Oxo incinerator to be performing very well (VOC destruction efficiency of 99.6 percent) but with a high superheat temperature of 450°C (850°F). So, in July 1978, some stainless steel shields were installed over the superheater elements to help lower the superheat temperature. A

subsequent survey in September 1978, showed the incinerator to be still destroying 99.6 percent of the VOC and with a lower superheat temperature of 400°C (750°F).

This study pointed out that mixing is a critical factor in efficiency and that incinerator adjustment after startup is the most feasible and efficient means of improving mixing and, thus, the destruction efficiency.

D.2.3.2 Monsanto Test Data.[11] Acrylonitrile is produced by feeding propylene, ammonia, and excess air through a fluidized, catalytic bed reactor. In the air oxidation process, acrylonitrile, acetonitrile, hydrogen cyanide, carbon dioxide, carbon monoxide, water, and other miscellaneous organic compounds are produced in the reactor. The columns in the recovery section separate water and crude acetonitrile as liquids. Propane, unreacted propylene, unreacted air components, some unabsorbed organic products, and water are emitted as a vapor from the absorber column overhead. The crude acrylonitrile product is further refined in the purification section to remove hydrogen cyanide and the remaining hydrocarbon impurities.

The organic waste streams from this process are incinerated in the absorber vent thermal oxidizer at a temperature and residence time sufficient to reduce stack emissions below the required levels. The incinerated streams include (1) the absorber vent vapor (propane, propylene, CO, unreacted air components, unabsorbed hydrocarbons), (2) liquid waste acetonitrile (acetonitrile, hydrogen cyanide, acrylonitrile), (3) liquid waste hydrogen cyanide, and (4) product column bottoms purge (acrylonitrile, some organic heavies). The two separate acrylonitrile plants at Chocolate Bayou, Texas, employ identical thermal oxidizers.

1. Control Device - The Monsanto incinerator burns both liquid and gaseous wastes from the acrylonitrile unit and is termed the absorber vent thermal oxidizer. Two identical oxidizers are employed. The primary purpose of the absorber vent thermal oxidizers is hydrocarbon emission abatement.

Each thermal oxidizer is a horizontal, cylindrical, saddle-supported, end-fired unit consisting of a primary burner vestibule attached to the main incinerator shell. Each oxidizer measures 18 feet in diameter by 36 feet in length.

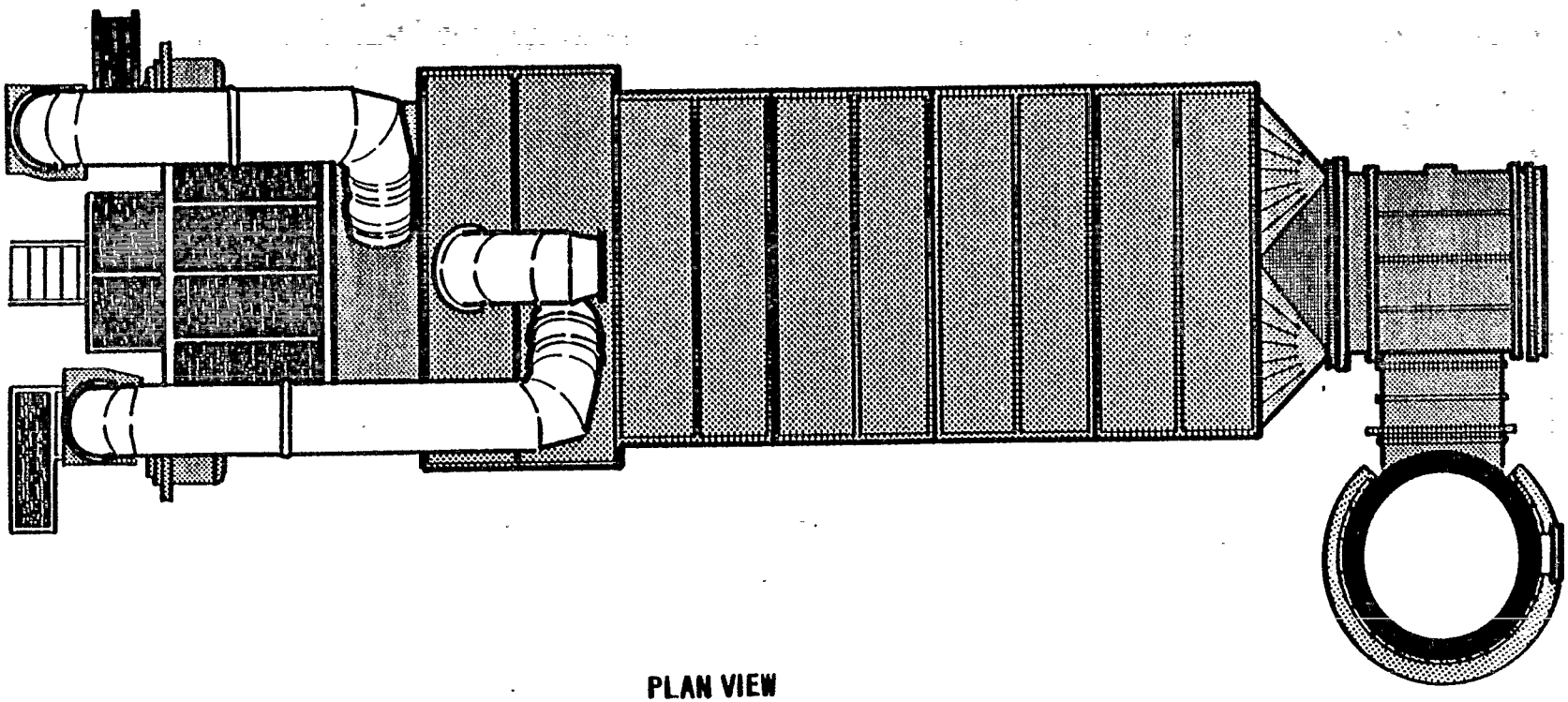

Figure D-5. Off-gas incinerator, Monsanto Co., Chocolate Bayou Plant.

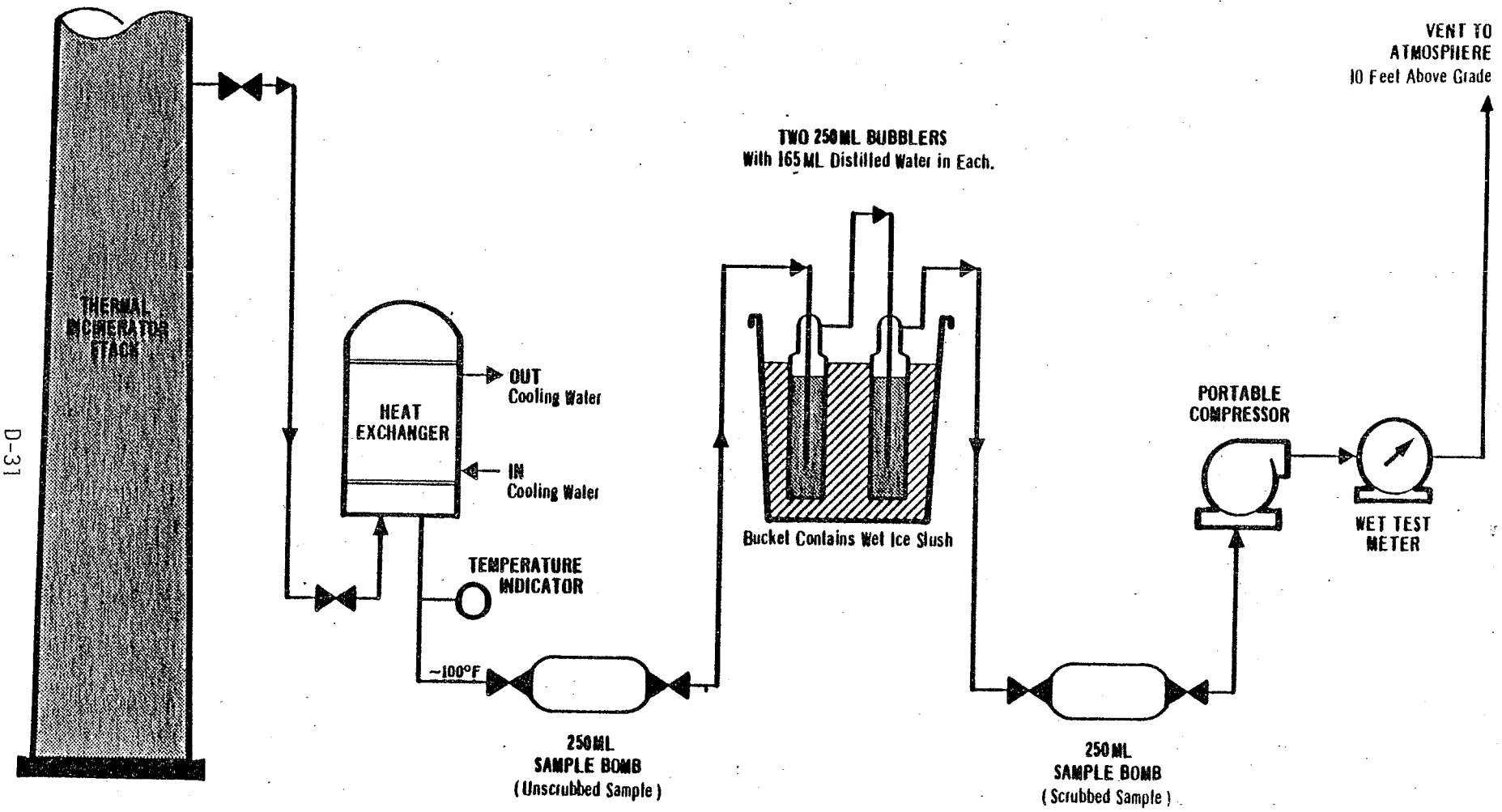

NOTE: From Exchanger Process Outlet, All Lines are Vacuum Tubing.

Figure D-6. Thermal incinerator stack sampling system.

The thermal oxidizer is provided with special burners and burner guns. Each burner is a combination fuel-waste liquid unit. The absorber vent stream is introduced separately into the top of the burner vestibule. The flows of all waste streams are metered and sufficient air is added for complete combustion. Supplemental natural gas is used to maintain the operating temperature required to combust the organics and to maintain a stable flame on the burners during minimum gas usage. Figure D-5 gives a plan view of the incinerator.

2. Sampling and Analytical Techniques. The vapor feed streams (absorber vent) to the thermal oxidizer and the effluent gas stream were sampled and analyzed using a modified analytical reactor recovery run method. The primary recovery run methods are Sohio Analytical Laboratory procedures.

The modified method involved passing a measured amount of sample gas through three scrubber flasks containing water and catching the scrubbed gas in a gas sampling bomb. The samples were then analyzed with a gas chromatograph and the weight percent of the components was determined.

Figure D-6 shows the apparatus and configuration used to sample the stack gas. It consisted of a sampling line from the sample valve to the small water-cooled heat exchanger. The exchanger was then connected to a 250 ml sample bomb used to collect the unscrubbed sample. The bomb was then connected to a pair of 250 ml bubblers, each with 165 ml of water in it. The scrubbers, in turn, were connected to another 250 ml sample bomb used to collect the scrubbed gas sample which is connected to a portable compressor. The compressor discharge then was connected to a wet test meter that vents to the atmosphere.

After assembling the apparatus, the compressor was turned on drawing the gas from the stack and through the system at a rate of about 90 cm^3/s (0.2 ft^3/min). Sample gas was drawn until at least 0.28 m^3 (10 ft^3) passed through the scrubbers. After the 0.28 m^3 (10 ft^3) was scrubbed, the compressor was shutdown and the unscrubbed bomb was analyzed for CH_4, C_2's, C_3H_6, and C_3H_8, the scrubbed bomb was analyzed for N_2, air, O_2, CO_2, and CO, and the bubbler liquid was analyzed for acrylonitrile, acetonitrile, hydrogen cyanide, and total

organic carbon. The gaseous samples were analyzed by gas chromatography.

3. Test Results. The Monsanto Chemical Intermediate Company conducted emissions testing at its Alvin (Chocolate Bayou), Texas, acrylonitrile production facility during December 1977. The VOC destination efficiency reported was 99 percent. (Residence time information was not available and the temperature of the incinerator is considered confidential information by Monsanto.)

D.2.4 Union Carbide Lab-Scale Test Data[12]

Union Carbide test data show the combustion efficiencies achieved on 15 organic compounds in a lab-scale incinerator operating between 430° and 830°C (800° and 1500°F) and 0.1 to 2 seconds residence time. The incinerator consisted of a 130 cm, thin bore tube, in a bench-size tube furnace. Outlet analyzers were done by direct routing of the incinerator outlet to a FID and GC. All inlet gases were set at 1000 ppmv.

In order to study the impact of incinerator variables on efficiency, mixing must first be separated from the other parameters. Mixing cannot be measured and, thus, its impact on efficiency cannot be readily separated when studying the impact of other variables. The Union Carbide lab work was chosen since its small size and careful design best assured consistent and proper mixing.

The results of this study are shown in Table D-7. These results show moderate increases in efficiency with temperature, residence time, and type of compound. The results also show the impact of flow regime on efficiency.

Flow regime is important in interpreting the Union Carbide lab unit results. These results are significant since the lab unit was designed for optimum mixing and, thus, the results represent the upper limit of incinerator efficiency. As seen in Table D-7, the Union Carbide results vary by flow regime. Though some large-scale incinerators may achieve good mixing and plug flow, the worst cases will likely require flow patterns similar to complete backmixing. Thus, the results of complete backmixing would be relatively more comparable to those obtained from large-scale units.

Table D-7. DESTRUCTION EFFICIENCY UNDER STATED CONDITIONS BASED ON RESULTS OF UNION CARBIDE LABORATORY TESTS[a]

		Destruction Efficiency of Compound in Percent at Residence Time				
			0.75 second			0.5/1.5 sec
Flow Regime[b]	Temperature (°F)	Ethyl Acrylate	Ethanol	Ethylene	Vinyl Chloride	Ethylene
Two-stage Backmixing	1300	99.9	94.6	92.6	78.6	87.2/97.6
	1400	99.9	99.6	99.3	99.0	98.6/99.8
	1500	99.9	99.9	99.9	99.9	99.9/99.9
	1600	99.9	99.9	99.9	99.9	99.9/99.9
Complete Backmixing	1300	98.9	86.8	84.4	69.9	78.2/91.5
	1400	99.7	96.8	95.6	93.1	93.7/97.8
	1500	99.9	99.0	98.7	98.4	98.0/99.0
	1600	99.9	99.7	99.6	99.6	99.4/99.8
Plug Flow	1300	99.9	99.9	99.5	90.2	97.3/99.9
	1400	99.9	99.9	99.9	99.9	99.9/99.9
	1500	99.9	99.9	99.9	99.9	99.9/99.9
	1600	99.9	99.9	99.9	99.9	99.9/99.9

[a]The results of the Union Carbide work are presented as a series of equations. These equations relate destruction efficiency to temperature, residence time, and flow regime for each of 15 compounds. The efficiencies in this table were calculated from these equations.

[b]Three flow regimes are presented: two-stage backmixing, complete backmixing, and plug flow. Two-stage backmixing is considered a reasonable approximation of actual field units, with complete backmixing and plug flow representing the extremes.

D.3 VAPOR RECOVERY SYSTEM VOC EMISSION TEST DATA[13]

On July 14, 1980, Mobil Company collected samples of hydrocarbon emissions from the exhaust vent of the Vapor Recovery/Knockdown System at its Santa Ana, California polystyrene plant. The samples were taken using a MDA-808 Accuhaler[R] pump while velocity was determined using a Kurz[R] Model 441 air velocity meter. Samples were taken while the plant was in normal operation. One set of samples was taken while a vacuum was drawn on dissolver tanks. Another set of samples was taken while a vacuum was drawn on the flash tank. Both sets of samples were analyzed for styrene and ethylbenzene by an independnet laboratory. Computations for emission rates were made based on velocity, sample volume and sample time. The test results, submitted by the company, indicate that 0.942 kg/day of ethylbenzene and 10.018 kg/day of styrene are emitted from the exhaust vent of the vapor recovery/knockdown system. No more information was provided regarding the sampling and analysis procedure used by Mobil or the laboratory. It is assumed that standard industrial practices were used, thus generating valid estimates of emissions. However, the data should not be used as a significant basis for emission limitation.

D.4 DISCUSSION OF TEST RESULTS AND THE TECHNICAL BASIS OF THE POLYMERS AND RESINS VOC EMISSIONS REDUCTION REQUIREMENT

This section discusses test results as well as available theoretical data and findings on flare and incinerator efficiencies, and presents the logic and the technical basis behind the choice of the selected control level.

D.4.1 Discussion of Flare Emission Test Results

The results of the five flare efficiency studies summarized in Section 3.1.1.1 showed a 98 percent VOC destruction efficiency except in a few tests with excessive stream, smoking, or sampling problems. The results of the Joint CMA-EPA study, summarized in Table D-2, confirmed that 98 percent VOC destruction efficiency was achievable for all tests (including when smoking occurred) except when steam quenching occurred within the range of flare gas velocities and heating values tested. Flare gas velocities for the tests reported to date go up to a high of 18.2 m/s (60 fps) and lower heating values go as low as 11.2 MJ/m^3 (300 Btu/scf). Additional testing is currently

being undertaken to determine the effect of higher velocities, in particular, on destruction efficiencies.

D.4.2 Discussion of Thermal Incineration Test Results

Both the theoretical and experimental data concerning combustion efficiency of thermal incinerators are discussed in this section. A theoretical consideration of VOC combustion kinetics leads to the conclusion that at 870°C (1600°F) and 0.75 second residence time, mixing is the crucial design parameter.[14] Published literature indicates that any VOC can be oxidized to carbon dioxide and water if held at sufficiently high temperatures in the presence of oxygen for a sufficient time. However, the temperature at which a given level of VOC reduction is achieved is unique for each VOC compound. Kinetic studies indicate that there are two rate-determining (i.e., critically slow) steps in the oxidation of a compound. The first slow step of the overall oxidation reaction is the initial reaction in which the original compound disappears. The initial reaction of methane (CH_4) has been determined to be slower than that of any other nonhalogenated organic compound. Kinetic calculations show that, at 870°C (1600°F), 98 percent of the original methane will react in 0.3 seconds. Therefore, any nonhalogenated VOC will undergo an initial reaction step within this time. After the initial step, extremely rapid free radical reactions occur until each carbon atom exists as carbon monoxide (CO) immediately before oxidation is complete. The oxidation of CO is the second slow step. Calculations show that, at 870°C (1600°F), 98 percent of an original concentration of CO will react in 0.05 second. Therefore, 98 percent of any VOC would be expected to undergo the initial and final slow reaction steps at 870°C (1600°F) in about 0.35 second. It is very unlikely that the intermediate free radical reactions would take nearly as long as 0.4 seconds to convert 98 percent of the organic molecules to CO. Therefore, from a theoretical viewpoint, any VOC should undergo complete combustion at 870°C (1600°F) in 0.75 second. The calculations on which this conclusion is based have taken into account the low mole fractions of VOC and oxygen which would be found in the actual system. They have also provided for the great decrease in concentration per unit volume due to the elevated temperature.

However, the calculations assume perfect mixing of the offgas and combustion air. Mixing has been identified as the crucial design parameter from a theoretical viewpoint.

The test results both indicate an achievable control level of 98 percent at or below 870°C (1600°F) and illustrate the importance of mixing. Union Carbide results on lab-scale incinerators indicated a minimum of 98.6 percent efficiency at 760°C (1400°F). Since lab-scale incinerators primarily differ from field units in their excellent mixing, these results verify the theoretical calculations and suggest that a full-size field unit can maintain similar efficiencies if designed to provide good mixing. The tests cited in Table D-6 are documented as being conducted on full-scale incinerators controlling offgas from air oxidation process vents of a variety of types of plants. To focus on mixing, industrial units were selected where all variables except mixing were held constant or accounted for in other ways. It was then assumed any changes in efficiency would be due to changes in mixing.

The case most directly showing the effect of mixing is that of Petro-Tex incinerator. The Petro-Tex data show the efficiency changes due to modifications on the incinerator at two times after startup. These modifications (see Section D.2.3.1, 3. Test Results) increased efficiency from 70 percent to over 99 percent, with no significant change in temperature.

A comparison of the Rohm and Haas test versus the Union Carbide lab test, as presented in Table D-8, indirectly shows the effect of mixing. The UCC lab unit clearly outperforms the R&H unit. The data from both units are based on the same temperature, residence time, and inlet stream conditions. The more complete mixing of the lab unit is judged the cause of the differing efficiencies.

The six tests of in-place incinerators do not, of course, cover every feedstock. However, the theoretical discussion given above indicates that any VOC compound should be sufficiently destroyed at 870°C (1600°F). More critical than the type of VOC is the VOC concentration in the offgas. This is true because the kinetics of combustion are not first-order at low VOC concentrations. The Petro-Tex

Table D-8. COMPARISONS OF EMISSION TEST RESULTS FOR UNION CARBIDE LAB INCINERATOR AND ROHM & HAAS FIELD INCINERATOR[a]

Compound	Rohm and Haas Incinerator Inlet (lbs/hr)	Rohm and Haas Incinerator Outlet (lbs/hr)	Union Carbide Lab Incinerator Inlet (lbs/hr)	Union Carbide Lab Incinerator Outlet (lbs/hr)
Propane	900	150	71.4	0.64
Propylene	1800[b]	150[b]	142.9	5.6
Ethane	10	375	0.8	3.9
Ethylene	30	190	2.4	3.4
TOTAL	2740	865	217.5	13.54
Overall VOC Destruction Efficiency:	68.4%		93.8%	

[a]Table shows the destruction efficiency of the four listed compounds for the Rohm & Haas (R&H) field and Union Carbide (UC) lab incinerators. The R&H results are measured; the UC results are calculated. Both sets of results are based on 1425°F combustion temperature and one second residence time. In addition, the UC results are based on complete backmixing and a four-step combustion sequence consisting of propane to propylene to ethane to ethylene to CO_2 and H_2O. These last two items are worst case assumptions.

[b]Are not actual values. Actual values are confidential. Calculations with actual values give similar results for overall VOC destruction efficiency.

results are for a butadiene plant, and butadiene offgas tends to be lean in VOC. Therefore, the test results support the achievability of 98 percent VOC destruction efficiency by a field incinerator designed to provide good mixing, even for streams with low VOC concentrations.

The EPA tests at Union Carbide and Rohm and Haas were for residence times greater than 0.75 second. However, theoretical calculations show that greater efficiency would be achieved at 870°C (1600°F) and 0.75 second than at the longer residence times but lower temperatures represented in these two tests. The data on which the achieveability of the 98 percent VOC destruction efficiency is based is test data for similar control systems: thermal incineration at various residence times and temperatures. If 98 percent VOC reduction can be achieved at a lower temperature, then according to kinetic theory it can certainly be achieved at 870°C (1600°F), other conditions being equal.

A control efficiency of 98 percent VOC reduction, or 20 ppm by compound, whichever is less stringent, has been considered to be the acheivable control level for all new incinerators, considering available technology, cost and energy use.[14] This is based on incinerator operation at 870°C (1600°F) and on adjustment of the incinerator after start-up. The 20 ppm (by compound) level was chosen after three different incinerator outlet VOC concentrations, 10 ppm, 20 ppm, and 30 ppm, were analyzed. In addition to the incinerator tests cited earlier in this Appendix, data from over 200 tests by Los Angeles County (L.A.) on various waste gas incinerators were considered in choosing the 20 ppm level. However, the usefulness of the L.A. data was limited by three factors: (1) the incinerators tested are small units designed over a decade ago; (2) the units were designed, primarily, for use on coating operations; and (3) the units were designed to meet a regulation requiring only 90 percent VOC reduction.

The 10 ppmv level was judged to be too stringent. Two of the six non L.A. tests and 65 percent of the L.A. tests fail this criteria. Consideration was given to the fact that many of the units tested were below 870°C (1600°F) and did not have good mixing. However, due to the large percent that failed, it is judged that even with higher temperatures and moderate adjustment, a large number of units would still not meet the 10 ppmv level.

The 20 ppm level was judged to be attainable. All of the non L.A. and the majority of the L.A. units met this criteria. There was concern over the large number of L.A. tests that failed, i.e. 43 percent. However, two factors outweighed this concern.

First, all of the non L.A. units met the criteria. This is significant since, though the L.A. units represent many tests, they represent the same basic design. They all are small units designed over a decade ago to meet a rule for 90 percent reduction. They are for similar applications for the same geographic region designed in many cases by the same vendor. Thus, though many failed, they likely did so due to common factors and do not represent a widespread inability to meet 20 ppm.

Second, the difference between 65 percent failing 10 ppmv and 43 percent failing 20 ppm is larger than a direct comparison of the percentages would reveal. At 20 ppm, not only did fewer units fail, but those that did miss the criteria did so by a smaller margin and would require less adjustment. Dropping the criteria from 10 ppm to 20 ppm drops the failure rate by 20 percent, but is judged to drop the overall time and cost for adjustment by over 50 percent.

The difference between the two levels is even greater when the adjustment effort for the worst case is considered. The crucial point is how close a 10 ppm level pushes actual field unit efficiencies to those of the lab unit. Lab unit results for complete backmixing indicate that a 10 ppm level would force field units to almost match lab unit mixing. A less stringent 20 ppm level increases the margin allowed for nonideal incinerator operation, especially for the worst cases. Given that an exponential increase may occur in costs to improve mixing enough for field units to approach lab unit efficiencies, a drop from 10 ppm to 20 ppm may decrease costs to improve mixing in the worst case by an order of magnitude.

The 30 ppm level was judged too lenient. The only data indicating such a low efficiency was from L.A. All other data showed 20 ppm. The non-L.A. data and lab data meet 20 ppm and the Petro-tex experience showed that moderate adjustment can increase efficiency. In addition, the L.A. units were judged to have poor mixing. The mixing deficiencies

were large enough to mask the effect of increasing temperature. Thus, it is judged that 20 ppm could be reached with moderate adjustment and that a 30 ppm level would represent a criteria not based on the best available control technology cost, energy, and environmental impact.

D.5 REFERENCES FOR APPENDIX D

1. McDaniel, M. Flare Efficiency Study, Volume I. Engineering-Science. Austin, Texas. Prepared for Chemical Manufacturers Association, Washington, D.C. Draft 2, January 1983.

2. Lee, K.W. et al., Polymers and Resins Volatile Organic Compound Emissions from Incineration: Emission Test Report, ARCO Chemical Company, LaPorte Plant, Deer Park, Texas, Volume I Summary of Results. U.S. Environmental Protection Agency, Research Triangle Park, North Carolina. EMB Report No. 81-PMR-1. March 1982.

3. SRI International, 1982 Directory of Chemical Producers.

4. Maxwell, W. and G. Scheil. Stationary Source Testing of a Maleic Anhydride Plant at the Denka Chemical Corporation, Houston, Texas. U.S. Environmental Protection Agency, Research Triangle Park, North Carolina. Contract No. 68-02-32814, March 1978.

5. Blackburn, J. Emission Control Options for the Synthetic Organic Chemicals Manufacturing Industry, Trip Report. U.S. Environmental Protection Agency, Research Triangle Park, North Carolina. EPA Contract No.
68-02-2577, November 1977.

6. Scheil, G. Emission Control Options for the Synthetic Organic Chemicals Manufacturing Industry, Trip Report. U.S. Environmental Protection Agency, Research Triangle Park, North Carolina. Contract No.
68-02-2577, November 1977.

7. Letter from Lawrence, A., Koppers Company, Inc., to Goodwin, D., EPA. January 17, 1979.

8. Air Oxidation Processes in Synthetic Organic Chemical Manufacturing Industry-Background Information for Proposed Standard Preliminary Draft EIS. U.S. Environmental Protection Agency. Research Triangle Park, North Carolina. August 1981. p. C-7 and C-8.

9. Letter from Towe, R., Petro-Tex Chemical Corporation, to Farmer, J., EPA. August 15, 1979.

10. Broz, L.D. and R.D. Pruessner. Hydrocarbon Emission Reduction Systems Utilized by Petro-Tex. Presented at 83rd National Meeting of AIChE, 9th Petrochemical and Refining Exposition, Houston, Texas, March 1977.)

11. Letter from Weishaar, M., Monsanto Chemical Intermediates Co., to Farmer, J., EPA, November 8, 1979.

12. Lee, K., J. Hansen and D. Macauley. Thermal Oxidation Kinetics of Selected Organic Compounds. (Presented at the 71st Annual Meeting of the APCA, Houston, Texas, June 1978.)

13. Letter and attachments from Bowman, V.A. Jr., Mobil Chemical Company, to Farmer, J.R., EPA. September 9, 1980. p. 13-16. Response to Section 114 letter on polystyrene manufacturing plants.

14. Memorandum from Mascone, D.C., EPA. June 11, 1980. Incinerator efficiency.

APPENDIX E: DETAILED DESIGN AND COST ESTIMATION PROCEDURES

APPENDIX E: DETAILED DESIGN AND COST ESTIMATION PROCEDURES

E.1 GENERAL

This appendix consists of a more detailed presentation of the bases, assumptions, and procedures used to estimate equipment designs and corresponding capital and operating costs for flares, thermal incinerators, catalytic incinerators, shell-and-tube condensers, and piping and ducting. The basis of design and cost estimates are presented in the following sections: E.2, flares; E.3, thermal incinerators; E.4, catalytic incinerators; E.5 shell-and-tube condensers; and E.6, piping and ducting. The installation cost factors used in each analysis and the annualized cost factors used in all of the cost analysis are given in Tables 5-2 and 5-3, respectively.

E.2 FLARE DESIGN AND COST ESTIMATION PROCEDURE

Flares are open combustion devices that can be used to effectively and inexpensively reduce VOC emissions. The polypropylene and polyethylene industries commonly use flares to control large emergency releases and some high VOC streams. Elevated flares were costed based upon 60 fps exit velocity and a minimum of 300 Btu/scf. Flare height and diameter, which are the primary determinants of capital cost, are dependent on flare flow rate, heating value, and temperature. Associated piping and ducting from the process sources to a header and from a header to the flare were conservatively designed for costing purposes. Operating costs for utilities were based on industry practice (1 fps purge of waste gas plus natural gas for continuous flow flare; 80 scfh natural gas per pilot, number of pilots based on flare tip diameter; 0.4 lb steam/lb hydrocarbon at maximum smokeless rate).

E.2.1 Flare Design Procedure. Design of flare systems for the various combinations of waste streams was based on standard flare design equations for diameter and height presented by IT Enviroscience.[1] These equations were simplified to functions of the following waste gas

characteristics: volumetric flow rate, lower heating value, temperature, and molecular weight. The diameter expression is based on the equation of flow rate with velocity times cross-sectional area. A minimum commercially available diameter of 2 inches was assumed. The height correlation premise is design of a flare that will not generate a lethal radiative heat level (1500 Btu/ft^2 hr, including solar radiation[2]) at the base of the flare (considering the effect of wind). Heights in 5-foot multiples with a minimum of 30 ft. were used.[3] Natural gas to increase the heating value to 115 Btu/scf is considered necessary by vendors to ensure combustion of streams containing no sulfur or toxic materials.[4] A minimum lower heating value of 300 Btu/scf has been shown to help ensure a 98 percent efficiency for steam-assisted flares. For flares with diameters of 24-inches or less, this natural gas was assumed to be premixed with the waste gas and to exit out the stack. For larger flares, a gas ring was assumed if large amounts of gas were required because separate piping to a ring injecting natural gas into the existing waste gas is more economical than increasing the flare stack size for large diameters. The flare height and diameter selection procedure is detailed in Table E-1.

Natural gas was assumed at a rate of 80 scfh per pilot flame to ensure ignition and combustion. The number of pilots was based on diameter according to available commercial equipment.[5] Purge gas also may be required to prevent air intrusion and flashback. A purge velocity requirement of 1 fps was assumed during periods of continuous flow for standard systems without seals.[6]

Steam was added to produce smokeless combustion through a combined mixing and quenching effect. A steam ring at the flare tip was used to add steam at a rate of 0.4 lb steam/lb of hydrocarbons (VOC plus methane and ethane) in the continuous stream.[7] Availability and deliverability of this quantity of steam was assumed.

Piping (for flows less than 700 scfm) or ducting (for flows equal to or greater than 700 scfm) was designed from the process sources to a header combining the streams and from the header to the base of the flare. Since it is usual industry practice, adequate pressure (approximately 3 to 4 psig) was assumed available to transport all waste gas streams without use of a compressor or fan. The source legs from the various

Table E-1. PROCEDURE TO DESIGN 98 PERCENT EFFICIENT (60 fps, 300 Btu/scf) ELEVATED STEAM-ASSISTED SMOKELESS FLARES

Item	Value
1. Waste gas flow rate, Q_{wg} (scfm)[a]	from Chapter 5
2. Lower heating value of waste gas, LHV_{wg} (Btu/scf)	from Chapter 5
3. Temperature of waste gas, T_{wg} (°F)	from Chapter 5
4. Molecular weight of waste gas, MW_{wg} (lb/lb-mole)	from Chapter 5
5. Weight percent of hydrocarbons, wt. % HC	from Chapter 5
6. Auxiliary natural gas flow rate, Q_{ng} (scfm)[b]	0, if $LHV_{wg} \geq 300$; $\frac{(300-LHV_{wg})Q_{wg}}{(630)}$, if $LHV_{wg}<300$ Btu/scf
7. Total flare gas flow rate, $Q_{fl.g}$ (scfm)	$Q_{wg} + Q_{ng}$
8. Lower heating value of flare gas, $LHV_{fl.g}$ (Btu/scf)	300, if $Q_{ng} > 0$; LHV_{wg}, if $Q_{ng} = 0$
9. Temperature of flare gas, $T_{fl.g}$ (°F)[c]	70, if $Q_{ng} = 0$ or $T_{wg} \approx 70$; $\frac{[Q_{wg} \times (MW_{wg}) \times T_{wg}] + [(Q_{ng}(1218)]}{(Q_{wg} \times MW_{wg}) + (17.4 \times Q_{ng})}$, if $Q_{ng} > 0$
10. Molecular weight of flare gas, $MW_{fl.g}$ (lb/lb-mole)	$MW_{w.g.}$, if $Q_{ng} = 0$; $\frac{(Q_{wg} \times MW_{wg}) + (17.4 \times Q_{ng})}{Q_{wg} + Q_{ng}}$, if $Q_{ng} > 0$
11. Calculated flare diameter, D calc. (in.)[d]	$(2.283 \times 10^{-2}) \left[Q_{fl.g}\sqrt{MW_{fl.g}\ (T_{fl.g} + 460)}\right]^{1/2}$
12. Selected flare diameter, D(in.)[e]	Select standard size for which cost data available: 2, 3, 4, 6, 8, 10, 12, 14, 16, 18, 20, 24, or 60.
13. Flare tip pressure drop, Δp (in. H_2O)[f]	$\left[(4.217 \times 10^{-4})\ Q_{fl.g}\ \sqrt{(T_{fl.g.} + 460)MW_{fl.g}}\ /D^2\right]^2$
14. Actual exit velocity, V_e (fps)[g]	$74.16\sqrt{\Delta p}$
15. Flame angle, θ[h]	$TAN^{-1}\ (88.2/V_e)$
16. Calculated flare height, $H_{calc.}$ (ft)[i]	$(2.185 \times 10^{-2})\sqrt{Q_{fl.g} \times LHV_{fl.g}} - [(6.05 \times 10^{-3}) \times D \times V_e \times COS\theta]$
17. Selected flare height, H (ft)	Select next larger multiple of 5 with a minimum of 30.
18. Safe pipeline length, L (ft)[j]	$\sqrt{[(4.095 \times 10^{-3}) \times Q_{fl.g} \times LHV_{fl.g}] - H^2}$

Footnotes for Table E-1

[a]Standard conditions for flare design and cost calculations: 70°F and 1 atm.

[b]Auxiliary natural gas requirement assumes 300 Btu/scf minimum lower heating value necessary to assure 98 percent destruction in accord with the results of the Joint CMA/EPA flare testing program, and lower heating value of natural gas of 930 Btu/scf at 70°F (1000 Btu/scf at 32°F). From an energy balance

$$(Q_{ng} \times LHV_{ng}) + (Q_{wg} \times LHV_{wg}) = (Q_{ng} + Q_{wg}) \times (300 \text{ Btu/scf})$$

$$Q_{ng} \text{ (scfm)} = \left[\frac{300 - LHV_{wg} \text{ (Btu/scf)}}{LHV_{ng} \text{ (Btu/scf)} - 300}\right] \times Q_{wg} \text{ (scfm)}$$

[c]Temperature of mixture approximated by assuming uniform specific heats per unit mass.

[d]From Enviroscience (Reference 1, Appendix A)

$$D(\text{in}) = \left[\frac{(2.72 \times 10^{-3}) \times Q_{fl.g} \text{ (lb/hr)} \times (T_{wg} \text{ (°F)} + 460)/MW_{fl.g}}{\sqrt{\Delta p \text{ (in. } H_2O)}}\right]^{1/2}$$

From the Environscience equation for flame angle,

$$\Delta p \text{ (in. } H_2O) = 55\,[V_e \text{ (fps)}/550]^2 = (1.818 \times 10^{-4})\, V_e^{\,2}$$

In accord with the results of the Joint CMA/EPA flare testing program:

$$V_e = 60 \text{ fps}$$

Substituting,

$$D \text{ (in.)} = \left[\frac{(2.72 \times 10^{-3}) \times Q_{fl.g} \text{ (scf/min)} \times MW_{fl.g} \text{ (lb/lb mole)} \times (60 \text{ min/hr}) \quad (T_{wg} + 460)/MW_{fl.g}}{(387 \text{ scf at } 70°F/\text{lb-mole}) \times \sqrt{(1.818 \times 10^{-4})\,(60)^2}}\right]^{1/2}$$

Which simplifies to the relationship given.

[e]Select next larger standard size than calculated diameter unless calculated diameter is within 10% of interval between next smaller and next larger size, if so, select next smaller standard size.

[f]From Enviroscience equation for D given in footnote d above.

$$\Delta p \text{ (in. } H_2O) = \left[\frac{(2.72 \times 10^{-3}) \times Q_{fl.g} \text{ (scf/min)} \times MW_{fl.g} \text{ (lb/lb-mole)} \times (60 \text{ min/hr}) \sqrt{(T_{w.g.} + 460)/MW_{fl.g}}}{(387 \text{ scf at } 70°F/\text{lb-mole}) \times D^2}\right]^2$$

FOOTNOTES FOR TABLE E-1 (continued)

[g]From Δp (in. H_2O) = 55 $[V_e\ (fps)/550]^2$ = $(1.818 \times 10^{-4})V_e^2$, (as in footnote d.)

[h]From Enviroscience (Reference 1, Appendix A) assuming wind velocity, V_w, of 60 mph

$$\theta = TAN^{-1}\left[\frac{1.47\ (fps/mph) x Vw\ (mph)}{550\quad \Delta p/55}\right] = TAN^{-1}\left[\frac{1.47\ (60)}{V_e}\right]$$

[i]From Enviroscience (Reference 1, Appendix A), assuming flame emissivity, ϵ, of 0.12, flame radiation intensity, I, of 1200 Btu/hr ft^2

$$H = \sqrt{\frac{Q_{fl.g}\ (lb/hr) \times LHV_{fl.g}\ (Btu/lb) x\ \epsilon}{(12.56)\ I}} \quad -3.33\ D\ \ (\Delta p/55)\ \ COS\,\theta$$

$$= \sqrt{\frac{[Q_{fl.g}(scf/min) \times LHV_{fl.g}\ (Btu/scf) \times 60\ min/hr \times 0.12]}{4\ \pi\ (1200\ Btu/hr - ft^2)}} \quad -3.33 \times D \times (V_e/550)\ COS\,\theta$$

[j]Safe pipe length is the pipe length necessary to reach the horizontal distance from the flare where the flame radiation intensity, I, is reduced to 440 Btu/hr-ft^2 including solar radiation (~300 Btu/hr-ft^2), a safe working level, (Reference 7):,

$$L = \sqrt{(r^2 - H^2)}$$

$$= \sqrt{\frac{[Q_{fl.g}\ (scfm) \times LHV_{fl.g}\ (Btu/scf) \times 60\ min/hr \times 0.12]}{12.56\ (140\ Btu/hr\text{-}ft^2)} - H^2}$$

sources to the flare header were assumed to be 70 feet in length,[8] while the length of pipelines to the flare was based on the horizontal distance required to provide a tolerable and safe radiation level for continuous working (440 Btu/hr-ft^2, including solar radiation).[5] Piping and ducting were selected and costed as outlined in Section E.6.

E.2.2 Flare Cost Estimation Procedure. Flare purchase costs were based on costs for diameters from 2 to 24 inches and heights from 20 to 200 feet provided by National Air Oil Burner, Inc., (NAO) during November 1982 and presented in Table E-2.[5] A cost was also provided for one additional case of 60 inch diameter and 40 feet height.[7] These costs are October 1982 prices of self-supporting flares without ladders and platforms for heights of 40 feet and less and of guyed flares with ladders and platforms for heights of 50 feet and greater. Flare purchase costs were estimated for the various regulatory alternatives by either choosing the value provided for the required height and diameter or using two correlations developed from the NAO data for purchase cost as a function of height and diameter. (One correlation for heights of 40 feet and less, i.e., self-supporting flares and one for heights of 50 feet and greater, i.e., guyed flares.) Purchase costs of large diameter, 40-ft. high flares were approximated using a curve developed from the NAO data (see Figure E-1). Purchase costs for fluidic seals were approximated using a curve based on data provided by NAO[7] (see Figure E-2).

A retrofit installation factor of 2.65 (see Table 5-2) was used to estimate installed flare costs. Installed costs were put on a June 1980 basis using the following Chemical Engineering Plant Cost Indices: the overall index for flares; the pipes, valves, and fittings index for piping; and the fabricated equipment index for ducting. Annualized costs were calculated using the factors presented in Table 5-3. The flare cost estimation procedure is presented in Table E-3.

E.3 THERMAL INCINERATOR DESIGN AND COST ESTIMATION PROCEDURE

Thermal incinerator designs for costing purposes were based on heat and mass balances for combustion of the waste gas and any required

Table E-2. FLARE BUDGET PURCHASE COST ESTIMATES PROVIDED BY NATIONAL AIR OIL BURNER, INC., IN OCTOBER 1982 DOLLARS

Tip Diameter	Flow Rate (lb/hr)	Flare Height (ft)			Purchase Price		
		1000 Btu/scf	1500 Btu/scf	2000 Btu/scf	1000 Btu/scf	1500 Btu/scf	2000 Btu/scf
2	2,800	20	20	20	$6,693	$6,693	$6,693
3	6,300	20	20	25	7,560	7,560	8,208
4	11,200	20	25	35	8,097	8,692	9,956
6	25,200	30	40	50	11,565	13,590	23,862
8	44,800	40	55	65	13,962	25,564	29,007
10	70,000	50	70	85	27,786	34,029	38,049
12	100,800	60	80	100	31,653	41,061	47,277
14	137,200	70	95	115	35,680	49,643	57,458
16	179,200	80	110	130	44,325	57,845	64,777
18	226,800	90	120	150	58,362	71,944	86,064
20	280,000	100	135	165	64,726	80,755	95,704
24	403,200	120	160	200	84,228	105,082	125,827

[a]Price for heights of 40 feet or less are for self-supporting flares without ladders or platforms. Prices for heights of 50 feet and greater are for guyed flares with ladders and platforms.

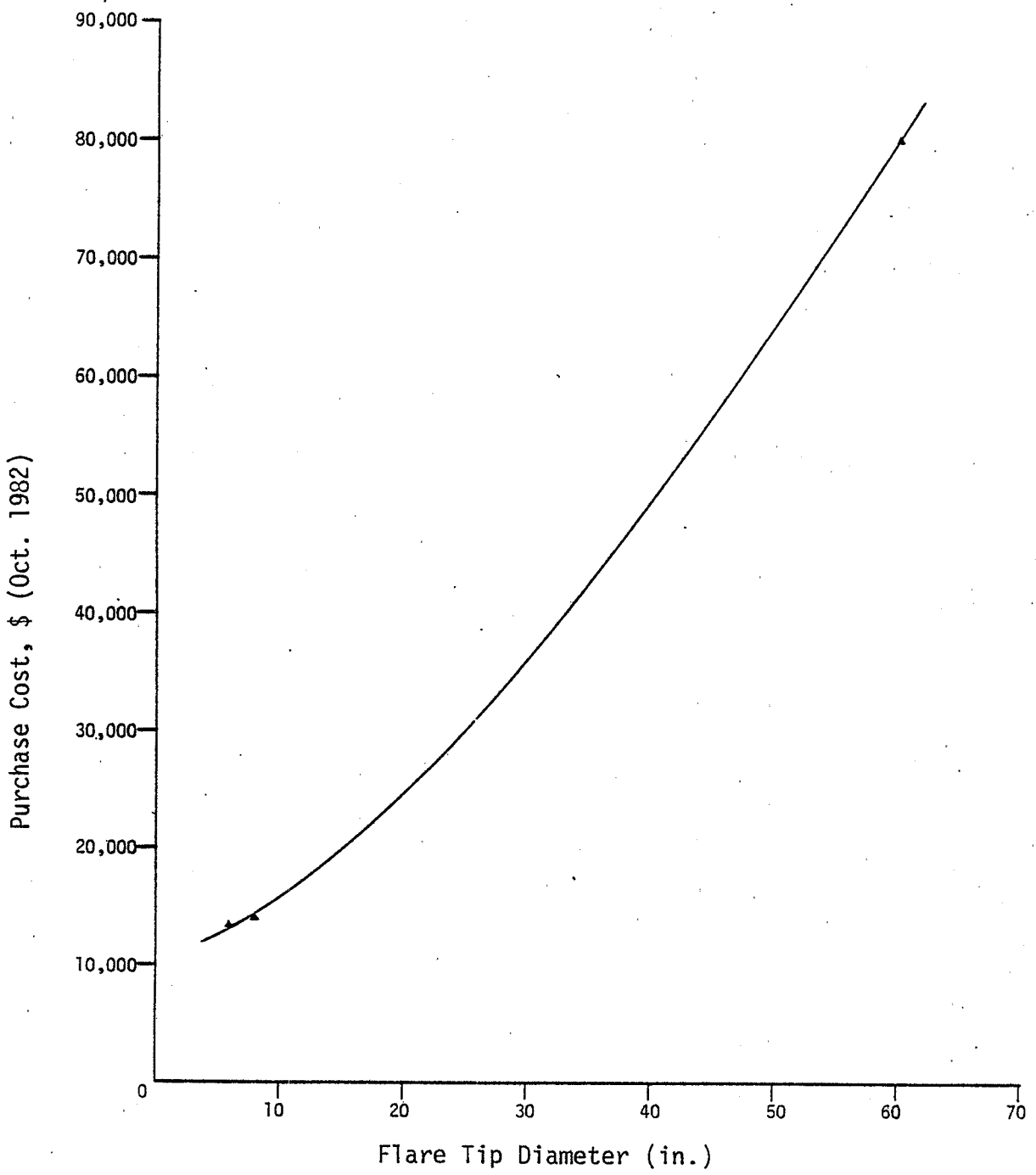

Figure E-1. Estimated Flare Purchase Cost for 40 ft Height

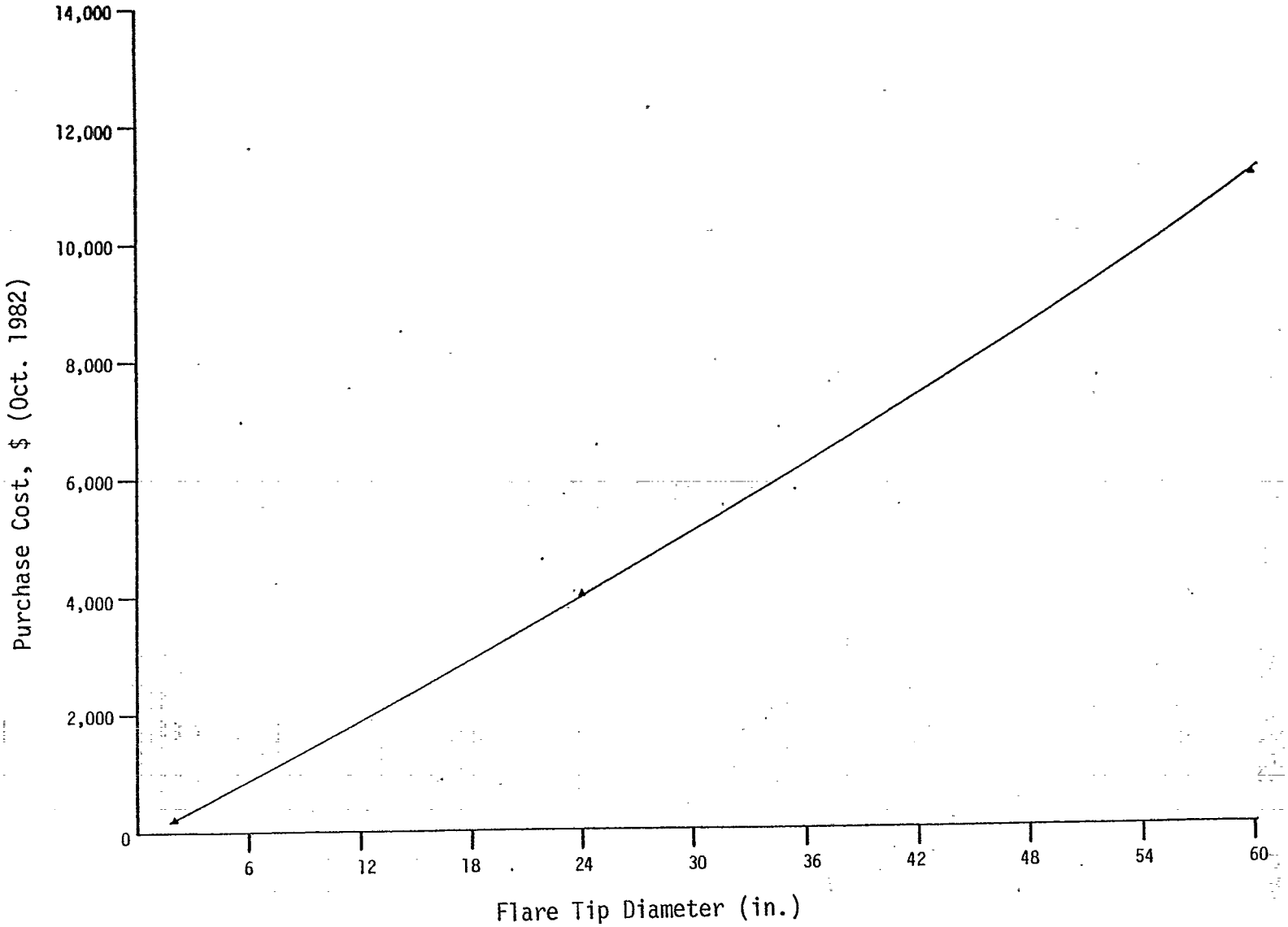

Figure E-2. Approximate Fluidic Seal Costs

auxiliary fuel, considering requirements of total combustion air. Costs of associated piping, ducting, fans, and stacks were also estimated.

E.3.1 Thermal Incinerator Design Procedure

Designs of thermal incineration systems for the various combinations of waste gas streams were developed using a procedure based on heat and mass balances and the characteristics of the waste gas in conjunction with some engineering design assumptions. In order to ensure a 98 percent VOC destruction efficiency, thermal incinerators were designed to maintain a 0.75 second residence time at 870°C (1600°F).[9] The design procedure is outlined in this section.

Streams with low heat contents, which require auxiliary fuel to ensure combustion and sometimes require air dilution or fuel enrichment to prevent an explosive hazard, are often able to utilize recovered waste heat by preheating inlet air, fuel, and perhaps, waste gas. The design considerations for such streams are noted in the following discussion, but the combustion calculations, etc. are not detailed because all combined streams to thermal incinerators for polymers and resins regulatory alternatives had sufficient waste gas heating values to combust at 870°C (1600°F) without preheating the input streams. Therefore, only the design procedure for high heat content streams, independently able to sustain combustion at 870°C (1600°F), is detailed in this section.

The first step in the design procedure was to calculate the physical and chemical characteristics affecting combustion of the waste gas stream from the model plant characteristics given in Chapter 2, using Table E-4. In order to prevent an explosion hazard and satisfy insurance requirements, dilution air was added to any individual or combined waste stream with both a lower heating value between 13 and 50 Btu/scf at 0°C (32°F) (about 25 and 100 percent of the lower explosive limit) and an oxygen concentration of 12 percent or greater by volume. Dilution air was added to reduce the lower heating value of the stream to below 13 Btu/scf. (Adding dilution air is a more conservative assumption than the alternative of adding natural gas and is probably more realistic as other streams often have enough heat content to sustain the combustion of the combined stream for the regulatory alternative.)

Table E-3. CAPITAL AND ANNUAL OPERATING COST ESTIMATION PROCEDURE FOR STEAM-ASSISTED SMOKELESS FLARES

Item	Value
Capital Costs	
Flare purchase cost, C'''_{fl} (Oct. 1982 $)	Select from Table E-2 if value given or use equations: $(3905.7) + (35.054)\ H \times D + (900.36)\ D - (126.08)D^2$, for $20 \leq H \leq 40$ ft and $D \leq 8$ in. $(6275.6) + (224.10)\ H + (12.782)\ H \times D + (24.856)D^2$, for $50 \leq H \leq 200$ ft. or from Figure E-2 if H = 40 ft and D > 8 in.
Fluidic seal purchase cost, $C'''_{fl.s.}$ (Oct. 1982 $)	See footnote a.
Flare system purchase cost, C''_{fl}	$C'''_{fl} + C'''_{fl.s.}$
Flare installed cost, C'_{fl}[b] (Oct. 1982 $)	$C''_{fl} \times 2.65$
Total installed piping costs, C'_p (Aug. 1978 $)	Method of Appendix E.6
Total installed ducting costs, C'_d (Dec. 1977 $)	Method of Appendix E.6
June 1980 Installed costs	
Piping[c], C_p	$C'_p \times 1.206$
Ducting[d], C_d	$C'_d \times 1.288$
Flare[e], $C_{fl.}$	$C'_{fl} \times 0.818$
Total flare system cost, C_{sys}	$(C_p + C_d + C_{fl})$

Table E-3. CAPITAL AND ANNUAL OPERATING COST ESTIMATION PROCEDURE FOR STEAM-ASSISTED SMOKELESS FLARES (Concluded)

Item	Value
Annualized Costs[f]	
Operating labor, C_l	620 hr/yr x \$18/hr = \$11,160
Maintenance, C_m	0.05 x C_{sys}
Utilities	
$(Q^{scfh}_{n.g.})$ pilot[g]	80 scfh, for $2 \leq D \leq 8$; 160 scfh, for $10 \leq D \leq 20$; 240 scfh, for D = 24; 320 scfh, for D = 60.
$(Q^{scfh}_{n.g.})$purge[h]	$[(0.3272)(D\ in)^2 - (Q^{scfm}_{fl.g})_{cont}] \times 60$
Cost natural gas, $C_{n.g.}$[i]	$0.3661\sum_i[(Q^{scfm}_{n.g.}) \times t_i]$ aux. + $53.45\ [(Q^{scfh}_{n.g.}, \text{pilot} +$ $(Q^{scfh}_{n.g.})\ \text{purge})]$
Cost steam, C_{stm}[j]	$3.296[Q_{w.g.}(scfm) \times MW \times \frac{wt.\ \%\ HC}{100\%}]_{cont.\ fl.g.}$
Taxes, admin. & insurance, C_{tax}	$C_{sys} \times 0.04$
Capital recovery, C_{cr}	$0.1315\ C_{fl} + 0.1627\ (C_p + C_d)$
Total annualized, C_{tot}	$C_l + C_m + C_{n.g.} + C_{stm} + C_{cr} + C_{tax}$

Footnotes for Table E-3

[a]Fluidic seal is costed only if cost of purge gas without seal is greater than the annualized cost of the seal plus any purge gas required with the seal, i.e., taking the October 1982 purchase cost of a seal, $C_{fl.s.}$ from Figure E-2 for D, if

$$53.45 \frac{\$/yr}{scfh} \times 60 \frac{min}{hr} \left\{0.372 \frac{scfm\ @\ 1\ fps}{in^2} \left[D(in.)\right]^2 - \left(Q^{scfm}_{fl.g.}\right)_{cont.}\right\}$$

$$> \left[(0.1315 + 0.05 + 0.04) \frac{\$/yr}{\$\ capital}\right.$$

$$\left. \times\ 0.818 \frac{Jun.\ '80\$}{Oct.\ '80\$} \times 2.1 \frac{installed}{purchase} \times C_{fl.s.}\right]$$

$$+ 53.45 \frac{\$/yr}{scfh} \left\{\left(0.45 \frac{scfh}{in.^2}\right) \times \left[D(in.)\right]^2 - \left(Q^{scfm}_{fl.g.}\right)_{cont.}\right\}$$

or, simplifying,

$$\text{if} \quad 1169 \left[D(in.)\right]^2 - 3154 \left(Q^{scfm}_{fl.g.}\right)_{cont.} > (0.3805 \times C_{fl.s.})$$

$$\text{then} \quad C'''_{fl.s.} = C_{fl.s.}$$

$$\left\{\begin{array}{l}\text{Note: This condition will be in error to the degree that} \\ \left[0.45\ D^2 - (Q^{scfm}_{fl.g.})_{cont.}\right] < 0\end{array}\right\}$$

$$\text{Otherwise,} \quad C'''_{fl.s.} = 0$$

[b]For installation cost factor breakdown, see Table 5-2.

[c]Updated using Chemical Engineering Plant Cost pipes, valves and fittings index from August 1978 (273.1) to June 1980 (329.3).

[d]Updated using Chemical Engineering Plant Cost fabricated equipment index from December 1977 (226.2) to June 1980 (291.3).

[e]Adjusted using Chemical Engineering Plant Cost Index from October 1982 (317 estimated) to June 1980 (259.2).

[f]For annualized cost factors, see Table 5-3.

[g]Based on vendor information for pilots without energy conservation (Reference 5).

[h]Ensures continuous flow of at least 1 fps for flare with any continuous flow not using fluidic seal:

$$\frac{\pi}{4} \left\{(D(in.))^2 \times \frac{ft^2}{144\ in^2} \times (1\ fps) \times (60\ sec/min) - \left[Q_{fl.g.}\ (scfm)\right]_{cont.}\right\} 60\ min/hr$$

Footnotes for Table E-3 (Concluded)

Ensures sufficient continuous flow per vendor information for flare with any continuous flow using a fluidic seal:

$$0.45 \ \frac{\text{scfh}}{\text{in}^2} \times [D(\text{in.})]^2$$

[i] $$\left\{\sum_i [Q_{n.g} \ (\text{scfm})_i \times 60 \text{ min/hr} \times (t_i \text{ operating hours per year at stream combination } i) + [Q_{pilot}(\text{scfh}) + Q_{purge}(\text{scfh})] \times 8760 \text{ hr/yr}\right\} \times \frac{520°\text{R scf at } 60°\text{F}}{530°\text{F scf at } 70°\text{R}} \times \frac{1{,}040 \text{ Btu (HHV)}}{\text{scf at } 60°\text{F}} \times \frac{\$5.98}{(10^6 \text{ Btu (HHV)}} \times \frac{(10^6 \text{ Btu})}{10^6 \text{ BTU}}$$

[j] Assumes steam at 0.4 lb/lb of hydrocarbon at maximum continuous flaring rate for 8600 hr/yr:

$$Q_{cont.} \ (\text{scfm}) \times MW_{cont.} \times \left(\frac{\text{wt.\% HC}}{100\%}\right)_{cont.} \times 8600 \text{ hr/yr} \times 60 \text{ min/hr} \times (\text{lb-mole/387 scf at } 70°\text{F}) \times (0.4 \text{ lb steam/lb HC}) \times \frac{(1000 \text{ lb steam})}{1000 \text{ (lb steam)}} \times \$6.18/(1000 \text{ lb steam})$$

or simplifying,

$$3.296\left[Q_{w.g.}(\text{scfm}) \times MW \times \frac{\text{wt.\% HC}}{100\%}\right]_{fl.g}^{cont.}$$

Table E-4. WORKSHEET FOR CALCULATION OF WASTE GAS CHARACTERISTICS (molecular weight, molecular formula, lower heating value in Btu/scf)

I.D.: _____ emission factor: em.f. = _____ kg VOC/Mg product; model plant capacity: CAP = _____ Gg/yr

lb/100 $lb_{w.g.}$ (= wt. % x 100)	Compound Name	Chemical Formula[a]	Molecular Weight (MW)	lb-moles/100 lb (lb/100 $lb_{w.g.}$ ÷ MW)	lb-molesC/100 lb (= A $\frac{lb}{lb_{w.g.}}$ lb-moles/(100 $lb_{w.g.}$)	lb-molesH/100 lb (= B $\frac{lb}{lb_{w.g.}}$ lb-moles/100 $lb_{w.g.}$)	lb-molesH/100 lb (= C $\frac{lb}{lb_{w.g.}}$ lb-moles/100 $lb_{w.g.}$)	lb-molesO/100 lb (= D $\frac{lb}{lb_{w.g.}}$ lb-moles/100 $lb_{w.g.}$)	Lower Heating Value (LHV) in Btu/lb[b]	Btu/$lb_{w.g.}$ (= lb/100 $lb_{w.g.}$) x LHV x $\frac{(100\ lb_{w.g.})}{100(lb_{w.g.})}$
	hydrogen	H_2	2.016			x2 =			51,571.4	
	methane	CH_4	16.04		x1 =	x4 =			21,502	
	nitrogen	N_2	28.01				x2 =		0	
	ethylene (ethene)	C_2H_4	28.05		x2 =	x4 =			20,276	
	air	($0.79N_2$,$0.21\ O_2$)	29.0	Air:			x1.58=	x0.42=	0	
	ethane	C_2H_6	30.07		x2 =	x6 =			20,416	
	methyl alcohol (methanol)	CH_3OH	32.04		x1 =	x4 =		x1 =	9,080c	
	C_2-C_5 hydrocarbons	($C_{2.5}H_5$)	35(ave)			x2.5=	x5 =		20,000[d]	
	C_2-C_5 hydrocarbons	($C_{2.7}H_{6.4}$)	39(ave)			x2.7=	x6.4=		19,900[d]	
	propylene (propene)	C_3H_6	42.08		x3 =	x6 =			19,683	
	propane	C_3H_8	44.09		x3 =	x8 =			19,929	
	C_2-C_5 hydrocarbons	($C_{3.5}H_8$)	50(ave)			x3.5=	x8 =		19,800d	
	n-butene	C_4H_8)	56.10		x4 =	x8 =			19,477	
	n-butane	C_4H_{10}	58.12		x4 =	x10 =			19,665	
	isobutane (2-methyl-propane)	C_4H_{10}	58.12		x4 =	x10 =			19,593	
	isopropyl alcohol (2-propanol)	C_3H_7OH	60.11		x3 =	x8 =		x1 =	13,500[c]	
	C_3-C_8 hydrocarbons	(C_5H_{12})	72(ave)			x5 =	x12 =		19,400[d]	

Table E-4. WORKSHEET FOR CALCULATION OF WASTE GAS CHARACTERISTICS (molecular weight, molecular formula, lower heating value in Btu/scf)

I.D.: _____ emission factor: em.f. = _____ kg VOC/Mg product; model plant capacity: CAP = _____ Gg/yr

lb/100 $lb_{w.g.}$ (= wt. % x 100)	Compound Name	Chemical Formula[a]	Molecular Weight (MW)	lb-moles/100 $lb_{w.g.}$ (lb/100 $lb_{w.g.}$ ÷ MW)	lb-molesC/100 $lb_{w.g.}$ (= A x lb-moles/(100 $lb_{w.g.}$))	lb-molesH/100 $lb_{w.g.}$ (= B x lb-moles/100 $lb_{w.g.}$)	lb-molesN/100 $lb_{w.g.}$ (= C x lb-moles/100 $lb_{w.g.}$)	lb-molesO/100 $lb_{w.g.}$ (= D x lb-moles/100 $lb_{w.g.}$)	Lower Heating Value (LHV) in Btu/lb[b]	Btu/$lb_{w.g.}$ (= lb/100 $lb_{w.g.}$) x LHV x (100 $lb_{w.g.}$)/100($lb_{w.g.}$)
	cyclohexane	C_6H_{12}	84.16		x6 =	x12 =			18,846	
	n-hexane	C_6H_{14}	86.17		x6 =	x14 =			19,391	
	C_{10}-C_{12} hydrocarbons	($C_{10.3}H_{20.4}$)	144(ave)		x10.3=	x20.4=			19,000[e]	

wt.% VOC = _____ (hydrocarbons except methane and ethane)

$\sum = \frac{\text{lb-moles}}{100\ lb_{w.g.}}$: _____ C: _____ H: _____ N: _____ O: _____ $\sum = \frac{Btu}{lb\ w.g.} = LHV_{w.g.} =$ _____ $\frac{Btu}{lb}$

$Q_{w.g.} = \frac{(27.56) \times em.f. \times CAP}{wt\ \%\ VOC\ \text{nonmethane or ethene}} =$ _____ $\frac{lb}{hr}$

$M.W._{w.g.} = 100/\sum =$ _____

$Q^{scfm}_{w.g.} = Q_{w.g.} \times \frac{5.98}{MW_{w.g.}} =$ _____ scfm@32°F

$T^{in}_{w.g.} \approx$ _____ °F

$LHV^{scf}_{w.g.} = \sum \times \frac{MW_{w.g.}\ (lb/lb\text{-mole}}{359 scf/lb\text{-mole}} =$ _____ $\frac{Btu}{scf@32°F}$

[a]Parentheses indicate an approximate formula for a given moleuclar weight.

[b]Lower heating values taken from American Petroleum Institute Research Project 44, except as noted otherwise.

[c]Calculated from heats of formation.

[d]Estimated based on approximate heat of formation for assumed composition.

[e]Assumed from extrapolation to approximate composition.

The combustion products were then calculated using Table E-5 assuming 18 percent excess air for required combustion air, but 0 percent excess air for oxygen in the waste gas, i.e., oxygen thoroughly mixed with VOC in waste gas. The procedure would include a calculation of auxiliary fuel requirements for streams (usually with heating values less than 60 Btu/scf) unable to achieve stable combustion at 870°C (1600°F) or greater. Natural gas was assumed as the auxiliary fuel as it was noted by vendors as the primary fuel now being used by industry. Natural gas requirements would be calculated using a heat and mass balance assuming a 10 percent heat loss in the incinerator. Minimum auxiliary fuel requirements for low heating content streams would be set at 5 Btu/scf to ensure flame stability.[10]

The design procedure for streams able to maintain combustion at 870°C (1600°F) is presented in Table E-6. Fuel was added for flame stability in amounts that provided as much as 13 percent of the lower heating value of the waste gas for streams with heating values of 650 Btu/scf or less. For streams containing more than 650 Btu/scf, flame stability fuel requirements were assumed to be zero since coke oven gas, which sustains a stable flame, contains only about 590 Btu/scf. In order to prevent damage to incinerator construction materials, quench air was added to reduce the combustion temperature to below the incinerator design temperature of 980 °C (1800 °F) for the cost curve given by IT Enviroscience.[11]

The total flue gas was then calculated by summing the products of combustion of the waste gas and natural gas along with the dilution air. The required combustion chamber volume was then calculated for a residence time of 0.75 sec, conservatively oversizing by 5 percent according to standard industry practice.[12] The design procedure assumed a minimum commercially available size of 1.01 m^3 (35.7 ft^3) based on vendor information[13] and a maximum shop-assembled unit size of 205 m^3 (7,238 ft^3).[14]

The design procedure would allow for pretreating of combustion air, natural gas, and when permitted by insurance guidelines, waste gas using a recuperative heat exchanger in order to reduce the natural gas required to maintain a 870°C (1600°F) combustion temperature. If

Table E-5. GENERALIZED WASTE GAS COMBUSTION CALCULATIONS

Basis: per 100 lb waste gas (w.g.) Stream I.D.: _____

Assumptions: (1) 18 percent excess air (1 O_2:3.76 N_2 by volume or by mole);

(2) known waste gas composition of C, H, N, O, (in lb-moles of atom per 100 lb w.g.);

(3) known amount of AIR (in lb-moles/100 lb w.g.) in waste gas stream (also included in N & O compositions);

(4) oxygen in waste gas (in air or hydrocarbons) thoroughly mixed with VOC so only stoichiometric requirement.

Reaction (in dry air):

$$C_c H_h N_n O_o + (1.18)\left(C + \frac{H}{4} - \frac{O}{2}\right)(O_2 + 3.76\, N_2) \quad C(CO_2) + \frac{H}{2}(H_2O) + \frac{N}{2} + \left(C + \frac{H}{4} - \frac{O}{2}\right)(1.18)(3.76)\, X(N_2) + (0.18)\left(C + \frac{H}{4} - \frac{O}{2}\right)(O_2)$$

Products of Combustion in lb/100 lb w.g. (wet):

CO_2: $\frac{44.01\ \text{lb}}{\text{lb-mole}} \times C\left(\frac{\text{lb-mole } CO_2}{100\ \text{lb w.g.}}\right) = (44.01)\ C =$ _____

H_2O: if air required, i.e., $\left(C + \frac{H}{4}\right) \frac{O}{2}$: $\frac{18.02\ \text{lb}}{\text{lb-mole}}\left(\frac{H}{2} + [\text{AIR} + \left(C + \frac{H}{4} - \frac{O}{2}\right)(4.76)(1.18)](0.013)\frac{\text{lb } H_2O}{\text{lb dry air}}\ ^{a}\left(29\ \frac{\text{lb dry air}}{\text{lb-mole}}\right)\right.$

$= (2.118)\ C + (9.539)\ H - (1.059)\ O + (0.377)\ \text{AIR} =$ _____

if no air required, i.e., $\left(C + \frac{H}{4}\right) \frac{O}{2}$: $\frac{18.02\ \text{lb}}{\text{lb-mole}}\left(\frac{H}{2}\right) + (\text{AIR})(0.013)\frac{\text{lb } H_2O}{\text{lb dry air}}\ ^{a}\left(29\ \frac{\text{lb dry air}}{\text{lb-mole}}\right) = (9.01)\ H + (0.377)\ \text{AIR} =$ _____

N_2: if air required i.e., $\left(C + \frac{H}{4}\right) \frac{O}{2}$: $\frac{28.02\ \text{lb}}{\text{lb-mole}}\left[\frac{N}{2} + \left(C + \frac{H}{4} - \frac{O}{2}\right)(3.76)(1.18)\right]$

$= (124.3)\ C + (31.08)\ H + (14.01)\ N - (62.16)\ O =$ _____

if no air required, i.e., $\left(C + \frac{H}{4}\right) \frac{O}{2}$: $\frac{28.02\ \text{lb}}{\text{lb-mole}}\left(\frac{N}{2}\right) = (14.01)\ N$

O_2: if air required, i.e., $\left(C + \frac{H}{4}\right) \frac{O}{2}$: $\frac{32.00\ \text{lb}}{\text{lb-mole}}(0.18)\left(C + \frac{H}{4} - \frac{O}{2}\right) = (5.760)\ C + (1.44)\ H - (2.88)\ O =$ _____

if no air required, i.e., $\left(C + \frac{H}{4}\right) \frac{O}{2}$: $\frac{32.00\ \text{lb}}{\text{lb-mole}}\left[\frac{O}{2} - \left(C + \frac{H}{4}\right)\right] = (-32.00)C - (8.00)\ H + (16.00)\ O =$ _____

_____

Total: $\frac{\text{prod.}}{\text{w.g.}} = \frac{\text{lb products (wet)}}{100\ \text{lb w.g.}} = \frac{\text{lb}(CO_2 + H_2O + N_2 + O_2)}{100\ \text{lb w.g.}} =$ _____

[a]Pounds of water per pound of dry air at 80°F and 60% relative humidity.

Table E-6. PROCEDURE TO DESIGN THERMAL INCINERATORS COMBUSTING STREAMS WITH LOWER HEATING VALUES (LHV) GREATER THAN 60 Btu/scf[a]

Item	Value	
(1) Assign auxiliary fuel (natural gas) for flame stability (% aux)[b]	For LHV(Btu/scf)	(% aux)[b]
	LHV ≤ 75	5
	75 < LHV ≤ 100	0.32(LHV)-19
	100 < LHV ≤ 200	16-0.03(LHV)
	200 < LHV ≤ 375	10
	375 < LHV ≤ 600	18.2-0.022(LHV)
	600 < LHV ≤ 650	65-0.1(LHV)
	650 < LHV	0[c]
(2) Calculate dilution air to limit combustion temperature to 1800°F (basis of cost estimates)[d]	$W_{air}(\frac{\text{lb air}}{100\text{ lb w.g.}}) = (0.198)\ (1 + \frac{\%aux}{100})LHV\ (Btu/lb)$ $-(1800 - T_{w.g.})\ [(5.95 \times 10^{-4})CO_2 + (1.14 \times 10^{-3})\ H_2O$ $+(5.92 \times 10^{-4})N_2 + (5.35 \times 10^{-4}\ O_2)]$ $+(1.65 \times 10^{-4})(\%aux) \times LHV\ (Btu/lb)$	
(3) Calculate total flue gas volume: (a) waste gas products of combustion:	$Q_{w.g.\ prod.}\ (\text{lb-moles/100 lb w.g.}) = \frac{CO_2}{44.01} + \frac{H_2O}{18.02} + \frac{N_2}{28.02} + \frac{O_2}{32.00}$	
(b) auxiliary natural gas products of combustion[e]:	$Q_{n.g.\ prod.}\ (\text{lb-moles/100 lb w.g.}) = (1.66 \times 10^{-7})(\%aux)(LHV\ w.g.)$	
(c) dilution air:	$Q_{dil.\ air}\ (\text{lb-moles/100 lb w.g.}) = W_{air}\ (\frac{\text{lb air}}{100\text{ lb w.g.}}) \div 29\text{ lb air/lb-mole air}$	
(d) total flue gas:[f]	$Q_{f.g.}\ (scfm) = (5.98 \times 10^{-2})\ (Q_{w.g.\ prod.} + Q_{n.g.\ prod.} + Q_{dil.\ air}) \times Q_{w.g.}$	
(4) Calculate combustion chamber volume:[g]	$V_{cc}(ft^3) = (6.029 \times 10^{-2})\ Q_{f.g.}\ (scfm)$[h]	

Footnotes for Table E-6

[a]Waste gas streams with lower heating values (LHV) of about 60 Btu/scf or greater can attain 1600°F combustion temperatures without additional fuel. Standard conditions for thermal incinerator design procedure are 32°F and 1 atm.

[b](% aux) = percentage of LHV per standard cubic foot of waste gas (from Table E-4) to be supplied by auxiliary fuel. Amounts assigned based on a conservative approximation of curve in Figure III-2 of Reference 10.

[c]No additional fuel requirement for flare stability assumed for LHV > 650 Btu/scf since 10% higher than LHV of coke oven gas, which is about 590 Btu/scf.

[d]$T_{w.g.}$ = inlet temperature of waste gas (from Ch. 2 and Table E-4); CO_2, H_2O, N_2, O_2 = lb. of waste gas combustion products per 100 lb of waste gas from Table E-5. Relationship based on following assumptions: (1) no preheat so inlet temperature of natural gas & dilution air assumed to be 60°F; (2) adequate unrequired oxygen in waste gas and in dilution air to combust small amounts of auxilliary natural gas for flame stability at 18 percent excess air; (3) mean specific heats(C_p) in Btu/lb °F between 60°F and 1800°F of 0.270 for CO_2, 0.517 for H_2O, 0.269 for N_2, 0.243 for O_2, and 0.261 for air; (4) natural gas composition (vol.%) of 92% CH_4, 4% C_2H_6, 2% C_3H_8, and 2 percent N_2 (MW = 17.40; LHV = 20,660 Btu/lb = 1000 Btu/scf). Therefore, for combustion of 1 mole of natural gas on a mole basis:

$$0.92\ CH_4 + 0.04\ C_2H_6 + 0.02\ C_3H_3 + 0.02\ N_2 + (2.08)(1.18)(O_2 + 3.76\ N_2) \longrightarrow [0.92 + (0.04 \times 2) + (0.02 \times 3)]\ CO_2 + [(0.92 \times 2) + 0.04 \times 3) + (0.02 \times 4)]H_2O + 0.18\ (2.08)\ O_2 + 0.02\ N_2$$

or simplifying and putting on a weight basis:

$$(2.68\ \text{lb}\ CO_2 + 2.11\ \text{lb}\ H_2O + 0.03\ \text{lb}\ N_2 + 0.68\ \text{lb}\ O_2)/\text{lb natural gas};$$

(5) 4.51 lb O_2 in waste gas and dilution air used for combustion of 1 lb of natural gas; (6) energy balance:

$$90\ LHV_{w.g.}\ [1+(\%\ aux/100)] \leq \sum(W_i c_{pi})_{\text{waste gas products}}\ (1800-T_{w.g.}) + (1800-60)\left\{\sum(W_i\ c_{pi})_{ng} \times (\%aux\ LHV_{w.g.})\ LHV_{n.g.} + [W(c_p)_{air} - 4.51(c_p)_O]\right\},$$

where $T_{w.g.}$ = inlet temperature of waste gas, W = weight c_p = mean specific heats at constant pressure (assuming same for temperature change of $T_{w.g.}$ to 1800°F as for 60°F to 1800°F since $T_{w.g.}$ generally about 60°F-100°F, and $LHV_{w.g.}$ and $LHV_{n.g.}$ = lower heating values of the waste gas and natural gas, respectively.

[e][(1.06 + 2.04 + 0.02 + 0.37) lb-mole natural gas] x [(% aux)$LHV_{w.g.}$] Btu natural gas required/100 lb waste gas ÷ (20,660 Btu n.g./lb n.g. x 17.4 lb n.g./lb-mole n.g.)

[f]($Q_{w.g.\ prod.}$ + $Q_{n.g.\ prod.}$ + $Q_{dil\ air}$) lb-moles/(100 lb w.g.) x (100 lb w.g.)/100 lb w.g. x $Q_{w.g.}$ (lb/hr) x (hr/60 min) x 359 scf at 32°F)/lb-mole.

[g]$Q_{f.g.}$(scfm) x (0.75 sec) x (min/60 sec) x (1800 + 460) °R/492°R x (1.05) design safety factor (Reference 12).

[h]If V_{cc} < 35.7 ft^3 (minimum commercially available size[13]), must add air and redesign.

If V_{cc} > 7238 ft^3 (maximum shop-assembled unit[14]), larger units would require field fabrication; therefore, assume multiple units of equal sizes.

a plant had a use for it, heat could be recovered. (In fact, a waste heat boiler can be used to generate steam, generally with a net cost savings.)

E.3.2 Thermal Incinerator Cost Estimation Procedure

Thermal incinerator purchase costs for the calculated combustion chamber volume were taken directly from Figure E-3, (Figure A-1 in the IT Enviroscience document, Reference 11). A retrofit installation cost factor of 5.29 (see Table 5-2) was used based on the Enviroscience document.[15] The installed cost of one 150-ft. duct to the incinerator and its associated fan and stack were also taken directly from Figure E-4 (Figure IV-15, curve 3 in the IT Enviroscience study[16]). A minimum cost of $70,000 (in December 1979) was assumed for waste gas streams with flows below 500 scfm. The costs of piping or ducting from the process sources to the 150-ft. duct costed above were estimated as for flares. Installed costs were put on a June 1980 basis using the following Chemical Engineering Plant Cost Indices: the overall index for thermal incinerators; the pipes, valves, and fittings index for piping; and the fabricated equipment index for ducts, fans, and stacks. Annualized costs were calculated using the factors in Table 5-3. The electricity required was calculated assuming a 6-inch H_2O pressure drop across the system and a blower efficiency of 60 percent. The cost calculation procedure is given in Table E-7.

E.4 CATALYTIC INCINERATOR DESIGN AND COST ESTIMATION PROCEDURE

Catalytic incinerators are generally cost effective VOC control devices for low concentration streams. The catalyst increases the chemical rate of oxidation allowing the reaction to proceed at a lower energy level (temperature) and thus requiring a smaller oxidation chamber, less expensive materials, and much less auxiliary fuel (especially for low concentration streams) than required by a thermal incinerator. The primary determinant of catalytic incinerator capital cost is volumetric flow rate. Annual operating costs are dependent on emission rates, molecular weights, VOC concentration, and temperature. Catalytic incineration in conjunction with a recuperative heat exchanger can reduce overall fuel requirements.

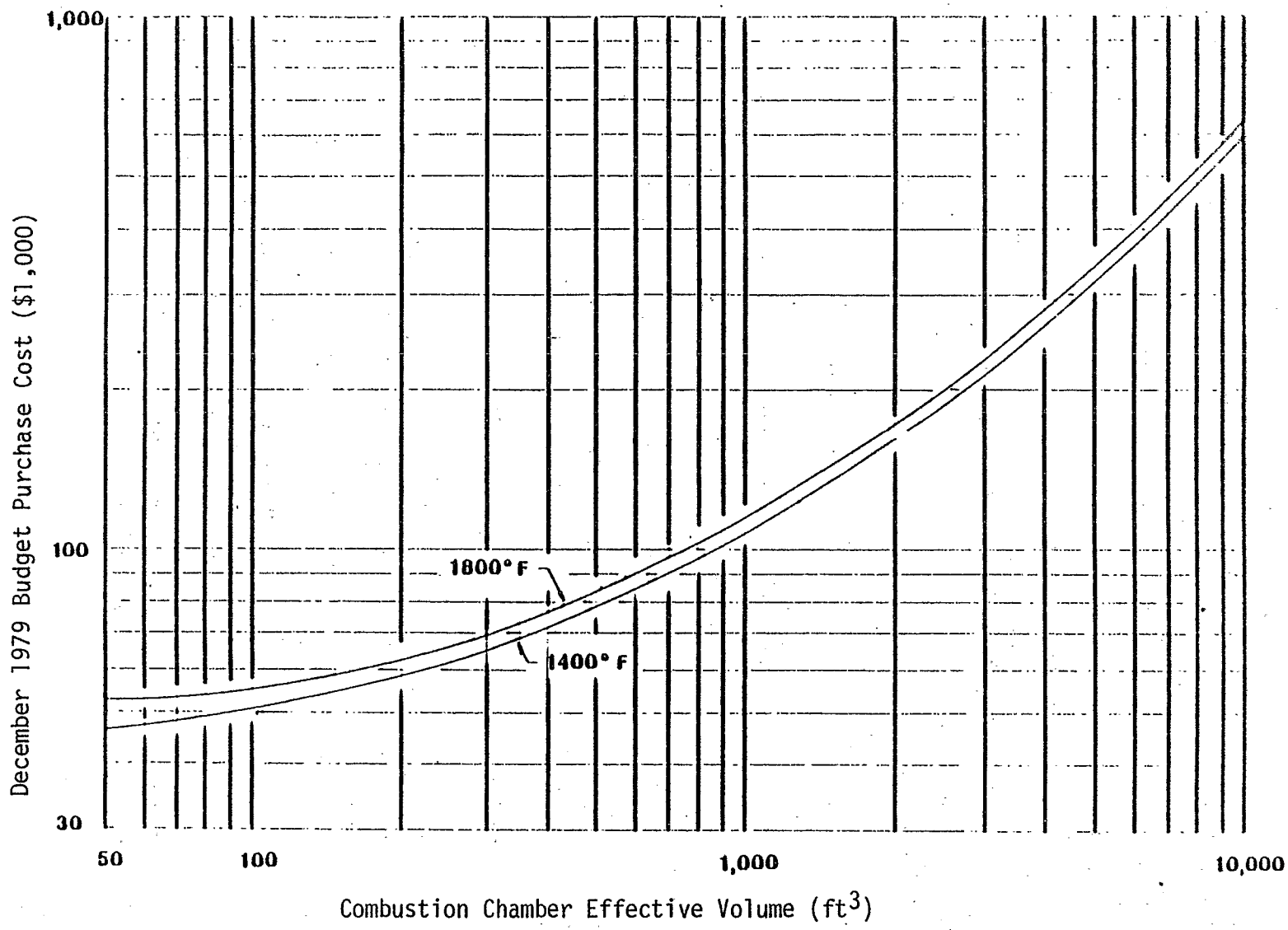

Figure E-3. Purchase Costs for Thermal Incinerator Combustion Chambers

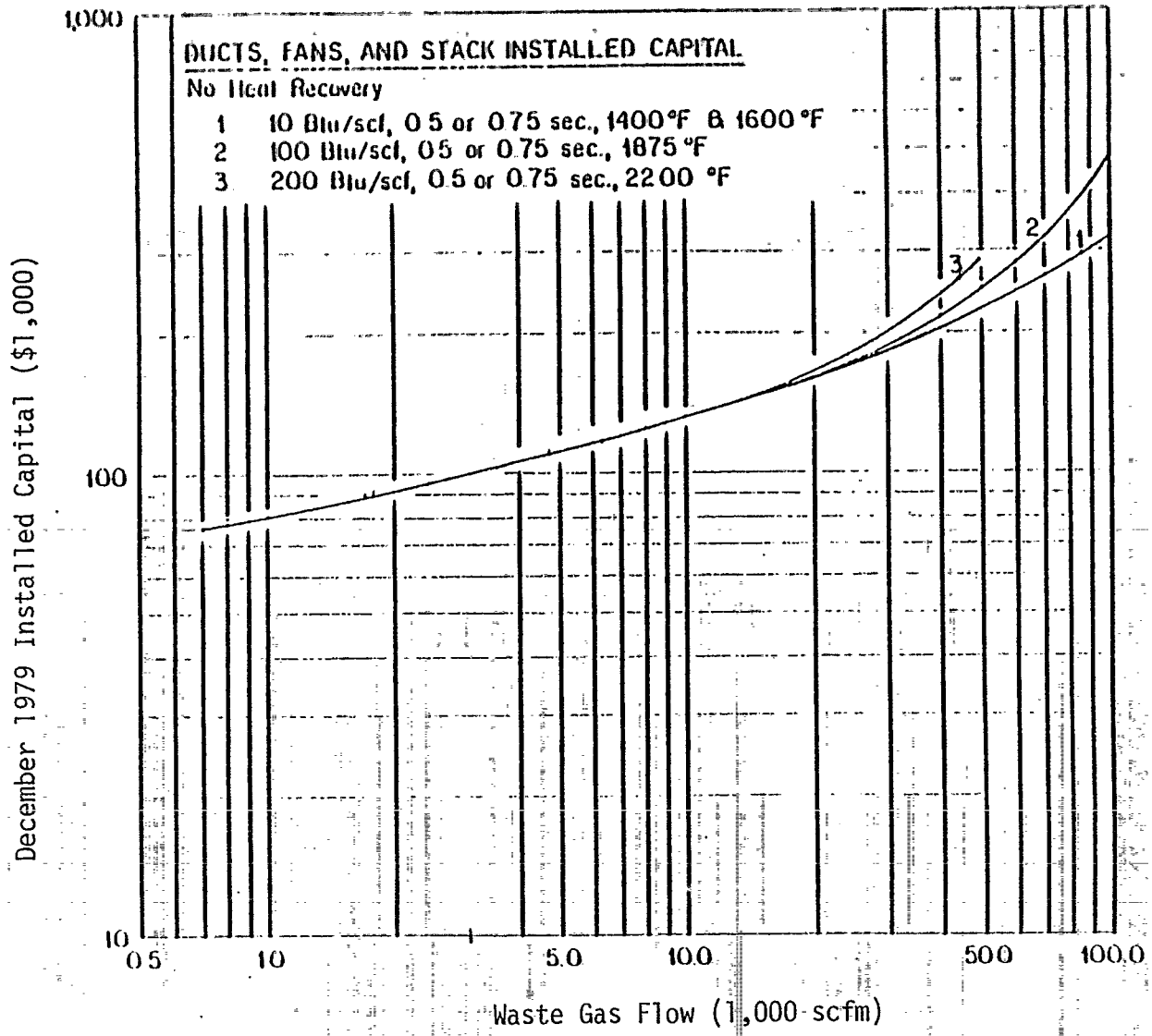

Figure E-4. Installed Capital Costs for Inlet Ducts, Waste Gas and Combustion Air Fans, and Stack for Thermal Incinerator Systems with no Heat Recovery

TABLE E-7. CAPITAL AND ANNUAL OPERATING COST ESTIMATES FOR RETROFIT THERMAL INCINERATORS WITHOUT HEAT RECOVERY

ITEM	VALUE
Capital Costs	
Combustion Chamber	
Purchase cost	from Figure E-3 for V_{cc}
Installed cost	purchase cost x 5.29
Installed cost, June 1980[a]	installed cost x 1.047
Piping & Ducting (from sources to main incinerator duct)	
Installed cost	see Section E.6 for $Q_{w.g.}$ (scfm)
Installed cost, June 1980[b]	installed cost x 1.206 for piping installed cost x 1.288 for ducting
Ducts, Fans & Stacks (from main duct to incinerator and from incinerator to atmosphere)	
Installed cost[c]	from Figure E-4 for $Q_{w.g.}$; use $70,000 minimum
Installed cost, June 1980[d]	installed cost x 1.064
Total Installed Cost, June 1980	sum of combustion chamber, piping & ducting, and ducts, fans, & stacks
Annualized Costs[e]	
Operating labor	1200 hr/yr x $18/hr = $21,600
Maintenance material & labor	0.05 x total installed cost
Utilities	
natural gas[f]	(5.245×10^{-4}) (% aux) x $LHV_{w.g.}$ x $Q_{w.g.}$ (lb/hr)
electricity[g]	(0.4610) x $Q_{f.g.}$ (scfm)
Capital recovery[h]	0.1627 x total installed cost
Taxes, administration & insurance	0.04 x total installed cost
Total Annualized Cost	operating labor + maintenance + utilities + capital recovery + taxes, administration & insurance

Footnotes for Table E-7

[a]Updated using Chemical Engineering Plant Cost Index from December 1979 (247.6) to June 1980 (259.2).

[b]Piping updated using Chemical Engineering Plant Cost pipes, valves, and fittings index from August 1978 (273.1) to June 1980 (329.3). Ducting updated using Chemical Engineering Plant Cost fabricated equipment index from December 1977 (226.2) to June 1980 (291.3).

[c]From Figure E-4 for no heat recovery from Enviroscience (Reference 16), which assumed 150-ft of round steel inlet ductwork with four ells, one expansion joint, and one damper with actuator; and costed according to the GARD Manual (Reference 17). Fans were assumed for both waste gas and combustion air using the ratios developed for a "typical hydrocarbon" and various estimated pressure drops and were costed using the Richardson Rapid System (Reference 18). Stack costs were estimated by Enviroscience based on cost data received from one thermal oxidizer vendor.

Although these Enviroscience estimates were developed for lower heating value waste gases using a "typical hydrocarbon" and no dilution to limit combustion temperature, the costs were used directly because Enviroscience found variations in duct, etc., design to cause only small variations in total system cost. Also, since the duct, fan, and stack costs are based on different flow rates (waste gas, combustion air and waste gas, and flue gas, respectively) the costs can not be separated to be adjusted individually.

[d]Updated using Chemical Engineering Plant Cost fabricated equipment index from December 1979 (273.7) to June 1980 (291.3).

[e]Cost factors presented in Table 5-3.

[f]$[(\%\ \text{aux}) \times LHV_{w.g.}/20{,}660\ \text{Btu/lb}_{n.g.}]\ (100\ \text{lb}_{n.g.}/100\ \text{lb}_{w.g.}) \times Q_{w.g.}\ (\text{lb/hr}) \times (100\ \text{lb}_{w.g.})/100(\text{lb}_{w.g.}) \times (8000\ \text{hr/yr}) \times (\text{lb-mole}/17.4\ \text{lb}_{n.g.}) \times (379\ \text{scf at } 60°\text{F/lb-mole}) \times (1040\ \text{Btu(HHV)/scf at } 60°\text{F}) \times \$5.98/10^6\ \text{Btu (HHV)} \times (10^6\ \text{Btu})/10^6\ (\text{Btu})$.

[g]$\text{Electricity} = (6\ \text{in. } H_2O\ \text{pressure drop}) \times Q_{f.g.}\ (\text{scfm}) \times (8000\ \text{hrs/yr}) \times (0.7457\ \text{kW/hp}) \times (5.204\ \text{lb/ft}^2/\text{in. } H_2O) \div [(60\ \text{sec/min}) \times (550\ \text{ft-lb/sec/hp}) \times (0.6\ \text{kW blower}/1\ \text{kW electric}) \times \$0.049/\text{kwh}]$.

[h]10 percent interest (before taxes) and 10 yr. life.

E.4.1 Catalytic Incinerator Design Procedure

The basic equipment components of a catalytic incinerator include a blower, burner, mixing chamber, catalyst bed, an optional heat exchanger, stack, controls, instrumentation, and control panels. The burner is used to preheat the gas to catalyst temperature. There is essentially no fume retention requirement. The preheat temperature is determined by the VOC content of gas, the VOC destruction efficiency, and the type and amount of catalyst required. A sufficient amount of air must be available in the gas or be supplied to the preheater for VOC combustion. (All the gas streams for which catalytic incinerator control system costs were developed are dilute enough in air and therefore require no additional combustion air.) The VOC components contained in the gas streams include ethylene, n-hexane, and other easily oxidizable components. These VOC components have catalytic ignition temperatures below 315°C (600°F). The catalyst bed outlet temperature is determined by gas VOC content. Catalysts can be operated up to a temperature of 700°C (1,300°F). However, continuous use of the catalyst at this high temperature may cause accelerated thermal aging due to recrystallization.

The catalyst bed size required depends upon the type of catalyst used and the VOC destruction efficiency desired. About 1.5 ft^3 of catalyst for 1,000 scfm is required for 90 percent control efficiency and 2.25 ft^3 is required for 98 percent control efficiency.[19] As discussed earlier many factors influence the catalyst life. Typically the catalyst may loose its effectiveness gradually over a period of 2 to 10 years. In this report the catalyst is assumed to be replaced every 3 years.

Heat exchanger requirements are determined by gas inlet temperature and preheater temperature. A minimum practical heat exchanger efficiency is about 30 percent. Gas temperature, preheater temperature, gas dew point temperature and gas VOC content determine the maximum feasible heat exchanger efficiency. A maximum heat exchanger efficiency of 65 percent was assumed for this analysis. The procedure used to calculate fuel requirements is presented in Table E-8. Estimated fuel requirements and costs are based on using natural gas, although either oil (No. 1 or 2) or gas can be used. Fuel requirements are drastically reduced

when a heat exchanger is used. Total heat requirements are based on a preheat temperature of 600°F. A stack is used to vent flue gas to the atmosphere.

E.4.2 Catalytic Incinerator Cost Estimation Procedure

The capital cost of a catalytic incinerator system is usually based on gas volume flow rate at standard conditions. For catalytic incineration, 70°F and 1 afm (0 psig) were taken as standard conditions. The operating costs are determined from the gas flow rate and other conditions such as gas VOC content and temperature. Table E-9 presents the basic gas parameters required for estimating system costs.

As noted earlier, equipment components of a catalytic incineration system include blower, preheater with a burner, mixing chamber, catalyst bed, an optional heat exchanger, stack, controls, and internal ducting including bypass. Calculations for capital cost estimates are based on equipment purchase costs obtained from vendors[19,20,21] and application of direct and indirect cost factors. Table E-10 presents third quarter 1982 purchase costs of catalyst incinerator systems with and without heat exchangers for sizes from 1,000 scfm to 50,000 scfm. The cost data are based on carbon steel for incinerator systems and stainless steel for heat exchangers. The heat exchanger costs are based on 65 percent heat recovery. Catalytic incinerator systems of gas volumes higher than 50,000 scfm can be estimated by considering two equal volume units in the system. A minimum available unit size of 500 scfm was assumed.[22,23] The installed cost of this minimum size unit (which can be used without addition of gas or air for stream flows greater than about 150 scfm[23]) was estimated to be $53,000 (June 1980). The heat exchangers for small size systems would be costly and may not be practical. Table 5-2 presents the direct and indirect installation cost component factors used for estimating capital costs of catalytic incinerator systems. The geometric mean of the two vendor estimates for each flow rate was multiplied by the ratio of total installed costs to equipment purchase costs of 1.82 developed for a skid-mounted catalytic incinerator. Actual direct and indirect cost factors depend upon the plant specific conditions and may vary with system sizes.

Since the equipment purchase cost presented in Table E-10 represents the third quarter of 1982, the cost data was adjusted to

Table E-8. OPERATING PARAMETERS AND FUEL REQUIREMENTS OF CATALYTIC INCINERATOR SYSTEMS

Item	Source of information or calculation
Waste Gas Parameters	
(1) Flow rate (Q_2), scfm	From Table E-9
(2) Amount of air present in the gas, scfm	0, if the waste gas contains VOC and nitrogen or other inert gas; and [(1 - volume percent VOC) ÷ (volume percent VOC)] x VOC volume flow (Q_1), scfm, if the waste gas contains VOC and air
(3) Amount of air required for combustion at 20% excess, scfm	See footnote a.
(4) Net amount of additional air required (Q_3), scfm	Item (3) - Item (2); and 0 if [Item (3) - Item (2)] is negative
(5) Total amount of gas to be treated (Q_4), scfm	Item (1) + Item (4)
(6) Waste gas Temperature at the inlet of PHR[b], °F	From Table E-9
(7) Waste gas temperature at preheater outlet or catalyst bed inlet, °F	600°F
(8) Temperature rise in the catalyst bed, °F	(25°F/1% LEL) x (%LEL from Table E-9)
(9) Flue gas temperature at catalyst bed outlet, °F	Item (7) + Item (8)
(10) Minimum possible temperature of flue gas at PHR outlet, °F	See footnote C.
(11) PHR efficiency at maximum possible heat recovery[d], %	[Item (1) x (Item (7) - 25°F - Item (6))] ÷ [Item (5) x (Item (9) - Item (6))][e]
(12) PHR design efficiency, %	See footnote f

Table E-8. OPERATING PARAMETERS AND FUEL REQUIREMENTS OF CATALYTIC INCINERATOR SYSTEM (concluded)

Item	Source of information or calculation
(13) Waste gas temperature at PHR outlet, °F	0.65 [Item (9) - Item (6)] + Item (6)
(14) Amount of heat required by preheater at additional 10% for auxiliary, Btu/min	Item (5) x [Item (7) - Item (13)] x [Gas specific heat[g], Btu/scf, °F] x (110%)[h]
(15) Amount of heat required for preheater and auxiliary fuel, 10^6 Btu/h	[Item (14) x 60 minutes/hour] x (10%)[h] x (10^6 Btu)/10^6 Btu
(16) Amount of natural gas required per year, 10^3 cfm	[Item (14) x (8,000 x 60) minutes/year] x 10^{-3} ÷ (1,040 Btu/cfm)

[a]On volume basis (scfm/scfm): 11.45 for methane, 20.02 for ethane, 28.58 for propane, 54.31 for hexane, 17.15 for ethylene, and 45.73 for pentane. Values taken from p. 6-2 in Steam (Reference 24) for 100% total air and multiplied by 1.2 for 120% total air or 20% excess air.

[b]Primary heat recovery unit.

[c]Heat exchanger should be designed for at least 50°F above the gas dew point.

[d]The heat exchanger will be designed for 25°F lower than the preheater temperature so as to not cause changes in catalyst bed outlet temperature.

[e]Though the heat recovery to the temperature level of inlet gas is the maximum heat efficiency possible, in some cases this may not be possible due to gas dew point condition.

[f]Cost estimates are based on calculated maximum possible heat recovery up to an upper limit of 65 percent heat recovery.

[g]Gas specific heat varies with composition and temperature. Used 0.019 Btu/ft^3°F based on average specific heat of air for calculation purpose.

[h]Auxiliary fuel requirement is assumed to be 10 percent of total.

TABLE E-9. GAS PARAMETERS USED FOR ESTIMATING CAPITAL AND OPERATING COSTS OF CATALYTIC INCINERATORS[a]

ITEM	VALUE
Stream identification	Identify the vent and the polymer industry from Chapters 2 and 5
Stream conditions	
Temperature, °F	
Pressure, psig	
VOC content:	
Emission factor, kg/Mg of product	
Weight % of total gas (W_1)	
Mass flow rate, kg/h	(Emission factor, E, kg/Mg) x 1000 Mg/Gg (Plant production rate, P, Gg/yr) ÷ (8,000 h/yr)
lb/h	(kg/h) x (2.205 lb/kg)
Organic constituents, wt %	
Average mol. wt. (M_1), lbs	
Volume flow (Q_1), scfm	(VOC mass rate, lb/h) ÷ (60 min./h) ÷ (Molecular weight (M_1), lbs/lb mole) x 385 scf/lb-mole at 68°F) = 1.768 (EP/M_1)
Heat content (H_1), Btu/scf	$(174.273)(2.521N_C + N_H)$[c]
Total gas:	
Constituents	VOC, air and others
Mass flow rate, lb/h	(VOC rate, lb/h) ÷ (wt% of VOC in gas, W_1/100%)
Molecular weight (M_2)	
Volume flow (Q_2), scfm	Gas mass rate, lb/h) ÷ (60 min/h) ÷ (Gas molecular weight (M_2), lb/lb mole) x (385 ft^3 /lb mole) = 1.768 (EP/M_2W_1)
Air volume flow rate, scfm	(Total gas flow (Q_2), scfm) - (VOC volume flow (Q_1), scfm)
VOC concentration (A), % of LEL	(100) [(Volume flow of VOC, scfm) ÷ (Volume flow of air, scfm] ÷ LEL[d]
Heat content (H_2), Btu/total scf	From Chapter 5[e]

Footnotes for Table E-9

[a]Obtain gas parameters from Chapter 2 of the CTG, and Chapter 3 of the background information document for the polymer manufacturing NSPS, except those to be calculated.

[b]Calculate using weight percent values of VOC components.

[c]If the VOC heating value is not available, calculate it using heat of combustion values of 14,093 Btu/lb from carbon converted to CO_2 and 51,623 Btu/lb from hydrogen converted to water. N_C and N_H denote number carbon and hydrogen atoms in VOC.

[d]Lower explosion levels of ethylene, hexane, methanol, propane, butane, and pentane are 3.1, 1.32, 7.3, and 2.5, 1.9, and 1.4, respectively.

[e]Total gas heat content averages 50 Btu/scf at 100 percent LEL.

TABLE E-10. CATALYTIC INCINERATOR VENDOR COST DATA[19,20]

Flow (scfm)	Catalytic Incinerator Equipment Purchase Cost($)[a]					
	Without heat recovery			With 65 % heat recovery		
	Vendor A	Vendor B	Geometric Mean	Vendor A	Vendor B	Geometric Mean
1,000	20,000	40,000	28,300	30,000	90,000	52,000
10,000	150-175,000	125,000	142,300	200-225,000	185,000	198,100
50,000	500,000	480,000	489,900	800-1,000,000	600,000	732,600

[a]Costs in third quarter 1982 dollars.

represent June 1980 by using a cost index multiplying factor of 82.3 percent (based on Chemical Engineering plant cost indices of 259.2 for June 1980 and 315.1 for August 1982). The direct and indirect capital cost factors were applied to the adjusted purchase costs and the resultant estimates of catalytic incinerator installed capital costs as of June 1980 are presented in Figure E-5.

Installed costs of piping, ducts, fans, and stacks were estimated by the same procedure as for thermal incinerators. Installed costs were put on a June 1980 basis using the following Chemical Engineering Plant Cost indices: the overall index for catalytic incinerators; the pipes, valves, and fittings index for piping; and the fabricated equipment index for ducts, fans, and stacks.

Table 5-3 presents cost bases used for annualized cost estimates. The operating labor requirement value is based on conversations with vendors. The capital recovery factor is based on capital recovery period of 10 years and an interest rate (before taxes) of 10 percent. (Actually the current tax regulations allow the control system owners to depreciate the total capital expenditure in the first 5 years.) Fuel cost is the major direct cost item.

The total annual operating costs are calculated using the cost bases shown in Table 5-3 and the fuel requirements calculated in Table E-8. Table E-11 presents a procedure for calculating total annualized cost estimates of catalytic incinerators.

The amount of catalyst required usually depends upon the control efficiency. According to a vendor,[21] typical catalyst costs are about \$3,000 per ft^3. Indirect additional costs involved in replacing the catalyst every 3 years are assumed to be 20 percent. Therefore, for 98 percent efficient systems, the annual catalyst replacement costs amount to \$2.70/scfm.

Electricity cost calculations are based on pressure drops of 4 in. water for systems with no heat recovery and 10 in. water for systems with heat recovery, and at 10 percent additional electricity required for instrumentation, controls, and miscellaneous. Therefore, at the conversion rate of 0.0001575 hp per inch of water pressure drop per cubic foot per minute, 65 percent motor efficiency, and \$0.049/kWh electricity unit cost, the total annual electricity costs amount to

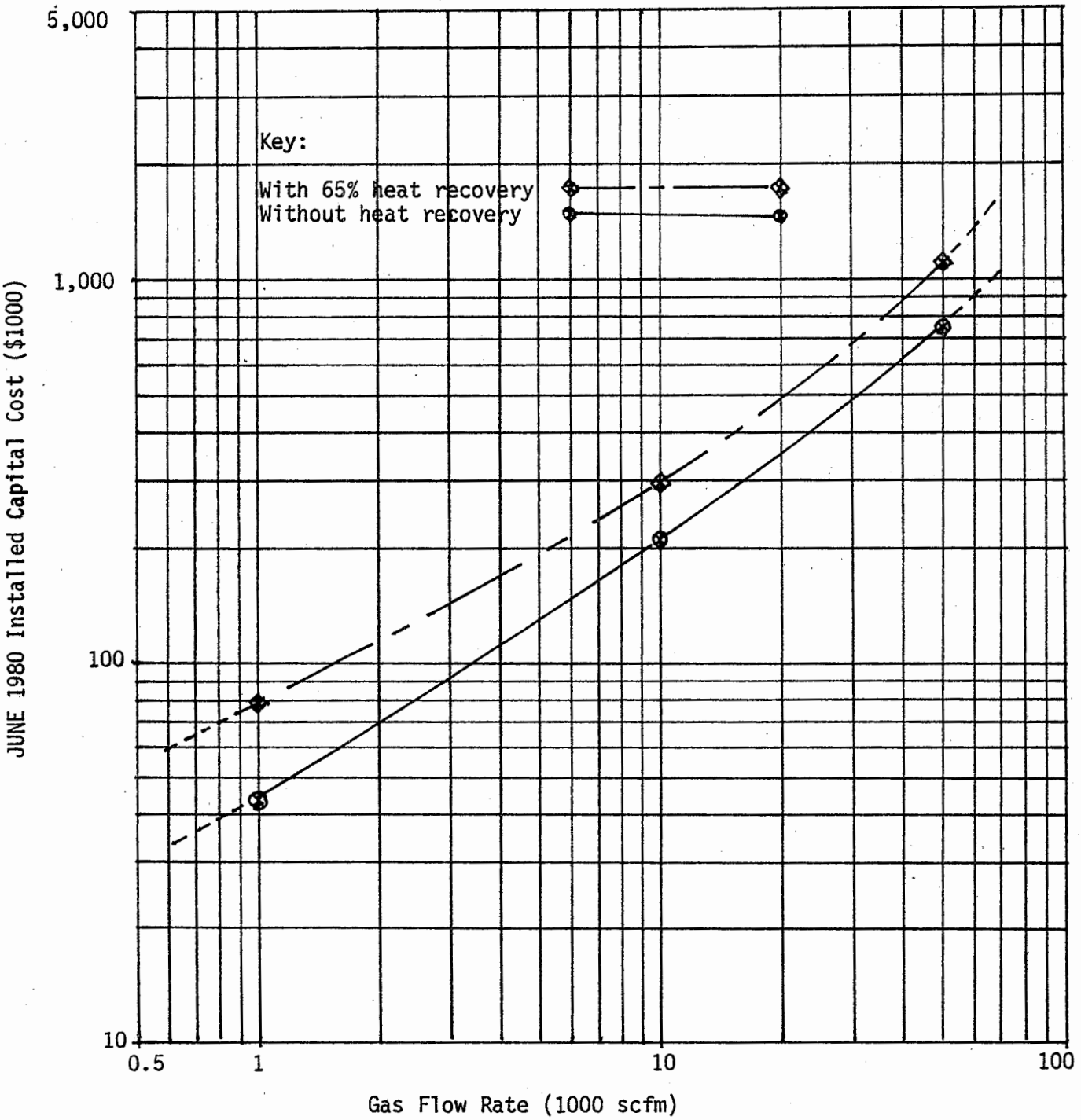

Figure E-5. Installed Capital Costs for Catalytic Incinerators With and Without Heat Recovery

Table E-11. CAPITAL AND OPERATIONG COST ESTIMATION FOR CATALYTIC INCINERATOR SYSTEMS

Item	Value
Capital Costs	
Incineration system	
Installed cost, June 1980	From Figure E-5
Installed retrofit cost, June 1980	Installed cost x 1.18, from Table 5-2
Piping & ducting (from sources to main incinerator duct)	
Installed cost	See Section E-6 for source flow rates, scfm.
Installed cost, June 1980[a]	Installed cost x 1.206 for piping Installed cost x 1.288 for ducting
Ducts, fans & stacks (from main duct to incinerator and from incinerator to atmosphere)	
Installed cost[b]	From Figure E-4 for waste gas flow (Q_2), scfm; use $70,000 minimum
Installed cost, June 1980[c]	Installed cost x 1.064
Total Installed Cost, June 1980	Sum of incineration systems, piping & ducting, and ducts, fans, & stacks
Annualized Costs	
Direct costs	
Operating labor	$11,200 for systems with no heat recovery; and $16,700 for systems with heat recovery
Maintenance material and labor	(0.05) x (Total installed capital cost, $ from Figure E-5)
Catalyst requirement	$2.7 x (Total gas volume flow(Q_4)[a] scfm, item 5 from Table E-8) = ($2.7 x Q_4)
Utilities:	
Fuel (natural gas)	($6.22/$10^3 ft^3$) x (Amount of natural gas required, $10^3 ft^3$, Item 16 of Table E-8)[e]

Table E-11. CAPITAL AND OPERATIONG COST ESTIMATION FOR CATALYTIC INCINERATOR SYSTEMS (Concluded)

Item	Value
Electricity	($0.312/scfm) x (Total gas volume flow rate (Q_4), scfm, Item 5 from Table E-8) for units with no heat recovery; and ($0.78/scfm) x (Total gas volume flow rate (Q_4), scfm, Item 5 from Table E-8) for units with heat recovery
Indirect Costs	
Capital recovery	(0.1627) x (Total installed capital cost, $ from Figure E-5)
Taxes, insurance and administrative charges	(0.04) x (Total installed capital cost, administrative charges $ from Figure E-5)
Total Annualized Costs	Sum of total direct costs and total indirect costs

[a]Updated using Chemical Engineering Plant Cost Index from December 1979 (247.6) to June 1980 (259.2).

[b]Piping updated using Chemical Engineering Plant Cost pipes, valves, and fittings index from August 1978 (273.1) to June 1980 (329.3). Ducting updated using Chemical Engineering Plant Cost fabricated equipment index from December 1977 (226.2) to June 1980 (291.3).

[c]See footnote c, Table E-7 for discussion on application of these costs developed by Enviroscience (Reference 25).

[d]Updated using Chemical Engineering Plant Cost fabricated equipment index from December 1979 (273.7) to June 1980 (291.3).

[e]Total gas flow including waste gas and additional combustion air.

$0.335/scfm for units with no heat recovery (i.e., for 4 in. H_2O pressure drop) and $0.838/scfm for units with heat recovery (i.e., for 10 in. H_2O pressure drop).

E.5 SURFACE CONDENSER DESIGN AND COST ESTIMATION PROCEDURE

This section presents the details of the procedure used for sizing and estimating the costs of condenser systems applied to the gaseous streams from the continuous process polystyrene model plant. Two types of condensers are in use in the industry: surface condensers in which the coolant does not contact the gas or condensate; and contact condensers in which coolant, gas, and condensate are intimately mixed.

Surface condensers were evaluated for the following two streams from the polystyrene model plant: the styrene condenser vent and the styrene recovery unit condenser vent. These streams consist of styrene and steam, which are immiscible, or of styrene in air, a non-condensable. The nature of components present in the gas stream determines the method of condensation: isothermal or non-isothermal. The condensation method for streams containing either a pure component or a mixture of two immiscible components is isothermal. In the isothermal condensation of two immiscible components, such as styrene and steam, the components condense at the saturation temperature and yield two immiscible liquid condensates. The saturation temperature is reached when the vapor pressure of the components equals the total pressure of the system. The entire amount of vapors can be condensed by isothermal condensation. Once the condensation temperature is determined, the total heat load is calculated and the corresponding heat exchanger system size is estimated. The condensation of styrene mixed with a non-condensable, such as air, can be considered isothermal if the temperature of one fluid is nearly constant. The analysis shows that the condenser coolant tempearture is nearly constant for the combined material recovery vent stream from the continuous polystyrene model plant. The condensation of styrene in air, nevertheless, is accomplished less readily, and thus more expensively, than the condensation of styrene in steam.

The following procedures and assumptions were used in evaluating the isothermal condensation systems for the two streams containing

(1) styrene in steam and (2) sytrene in air from the continuous polystyrene model plant.

E.5.1 Surface Condenser Design

The condenser system evaluated consists of a shell and tube heat exchanger with the hot fluid in the shell side and the cold fluid in the tube side. The system condensation temperature is determined from the total pressure of the gas and vapor pressure data for styrene and steam and sytrene in air. As the vapor pressure data are not readily available, the condensation temperature is estimated for styrene in steam by trial-and-error, and for styrene in air by a regression equation of available data points[26] using the Clausius Clapeyron equation which relates the stream pressures to the temperatures. The total pressure of the stream is equal to the vapor pressures of individual components at the condensation temperature. Once the condensation temperature is known, the total heat load of the condenser is determined from the latent heat contents of styrene and steam and, for styrene in air, from the latent heat content of the condensed sytrene and the sensible heat changes of styrene and air. Table E-12 shows the procedure for calculating the heat load of a condensation system for styrene in air. The design requirements of the condensation system are then determined based on the heat load and stream characteristics. The coolant is selected based on the condensation temperature. The condenser system is sized based on the total heat load and the overall heat transfer coefficient which is established from individual heat transfer coefficients of the gas stream and the coolant. An accurate estimate of individual coefficients can be made using such data as viscosity and thermal conductivity of the gas and coolant and the standard sizes of shell and tube systems to be used.

For styrene in steam, no detailed calculations were made to determine the individual and overall heat transfer coefficients. Since the streams under consideration contain low amounts of styrene, the overall heat transfer coefficient is estimated based on published data for steam.

For styrene-in-air, refrigerated condenser systems were designed according to procedures for calculating shell side[28] and tube side[29] heat transfer coefficients and according to condenser[30] and refrigerant[31,32]

Table E-12. PROCEDURE TO CALCULATE HEAT LOAD OF A CONDENSATION SYSTEM FOR STYRENE IN AIR

Item	Value
Heat exchanger type	Shell and tube heat exchanger with hot fluid in the shell side and the cold fluid in the tube side
Source identification	Identify the polymer industry and the vent from Chapters 2 and 5
Source production capacity (CAP), Gg/yr	From model plant in Chapter 2
Source emission factor (E), kg VOC/Mg product	From model plant in Chapter 2
Desired emission reduction, (% Red'n), %	96.1% at 3.09 kg VOC/Mg of product 40% at 0.2 kg VOC/Mg of product
Gas stream condition	Assumed saturated styrene in air at 80°F, 1atm.
Partial pressure of styrene at inlet (P_{in})	7.952 mm Hg[a]
Composition of gas stream at inlet;	0.01046 ft^3 styrene/ft^3 gas[b]; 0.002764 lb styrene/ft^3 gas[c]
Styrene mass flowrate (Ws), lb/hr[d];	0.2756 x CAP x E
Gas stream volumetric flowrate (V), acfm[e]	361.79 x W_s
Gas stream mass flowrate (W), lb/hr[f]	4.415 x V
Partial pressure of styrene at outlet (P_{out}), mm Hg	$\frac{100-\%Red'n}{100}$ x 7.952 mm Hg
Temperature required for reduction (T'_{out}), °K[g]	4847.95 ÷ [18,2440 - ln (P_{out})]
Temperature required for reduction (T_{out}), °F	(1.8 x T'_{out}) - 459.67
Latent heat change of styrene (Q_{sty}), Btu/hr[h]	166.36 x W x (% Red'n)

Table E-12. PROCEDURE TO CALCULATE HEAT LOAD OF A CONDENSATION SYSTEM FOR STYRENE IN AIR (Concluded)

Item	Value
Average (bulk) gas temperature (T_b),°F	$(80 + T_{out}) \div 2$
Density of air (ρair), lb/ft^3[i,j]	$1 \div [(0.002517 \times T_b) + 1.157]$
Specific heat of air((c_p)air), Btu/lb-°F	From API Report 44[k]
Sensible heat change of air (Q_{air}), Btu/hr	$V \times \rho air \times (c_p)_{air} \times (80-T_{out}) \times$ 60 min/hr
Specific heat of styrene ($(c_p)_{sty}$), Btu/lb-°F	From API Report 44[l]
Sensible heat change of styrene (Q'_{sty}), Btu/hr	$W_s \times (c_p)_{sty} \times (80-T_{out})$
Total design heat load (Q_{tot}), Btu/hr[m]	$1.2\ (Q_{sty} + Q_{air} + Q'_{sty})$

[a]Calculated from Clausius Clapeyron curve fit

$$(\ln p = m \frac{1}{T,°K} + b)$$ of styrene vapor pressure versus

temperature data given on p. 3-59 of the Chemical Engineers' Handbook (Reference 26) for 80°F (see temperature required for reduction).

[b]Volume fraction of styrene = $\frac{7.952 \text{ mm Hg}}{760 \text{ mm Hg}}$ = 0.01046 ft^3 styrene/ft^3 gas.

[c]Assuming ideal gas:

$$\frac{V}{n} = \frac{RT}{P} = \frac{1545 \text{ ft lb}_f/\text{lb}_m - °R \times 540\ °R}{14.7 \text{ lb}_f/\text{in.}^2 \times 144 \text{in}^2/\text{ft}^2} = 394.13 \text{ft}^3/\text{lb-mole};$$

styrene content (lb/ft^3 gas) =

$$\frac{0.01046 \text{ ft}^3 \text{ styrene}}{\text{ft}^3 \text{ gas}} \times \frac{\text{lb-mole}}{394.13 \text{ ft}^3} \times \frac{104.14 \text{ lb styrene}}{\text{lb-mole}}$$

Footnotes for Table E-12 (Concluded)

[d] $\frac{\text{CAP, Gg product/yr} \times 1000 \text{ Mg/Gg} \times \text{E kg VOC/Mg product}}{8000 \text{ hr/yr} \times 0.4536 \text{ kg/lb}}$

[e] $\frac{\text{CAP, Gg product/yr} \times 1000 \text{ Mg/Gg} \times \text{E kg VOC/Mg product}}{8000 \text{ hr/yr} \times 0.4536 \text{ kg/lb} \times 0.002764} = 92.26 \times \text{CAP} \times \text{E}$

[f] $\frac{\text{V, acfm @ 80°F} \times \approx 29 \text{ lb/lb-mole} \times 60 \text{ min/hr}}{394.13 \text{ acf/lb-mole @ 80°F}}$

[g] Solving Clausius Clapeyron curve fit of styrene vapor pressure data ($r^2 = 0.99995$) referred to in footnote a for temperature.

[h] Slope, m, of Clausius Clapeyron curve fit = $-\lambda/R$

latent heat of styrene, $\lambda = -m \times R =$

$$\frac{4847.95\ (°K) \times 1.9853 \text{ cal/g-mole-°K} \times 1.8\ \frac{\text{Btu-lb-mole}}{\text{cal/g-mole}}}{104.14 \text{ lb/lb-mole}}$$

[i] $T,°K = T,°C + 273.15 = \frac{5}{9}(T,°F-32) + 273.15 = 0.5556\ T,°F + 255.37$

[j] For an ideal gas ($pV = mRT/MW$), $\frac{\rho 1}{\rho 2} = \frac{m_1/V_1}{m_2/V_2} = \frac{T_2}{T_1}$; $\rho_{air} = 0.0808 \text{ lb/ft}^3$

at 0°C (ChE Hndbk, p. 3-72)

$$\rho_{air} \text{ @ } T,°K = 0.0808 \times \frac{273.15°K}{T,°K} = \frac{0.808 \times 237.15}{0.5556 \times T,°F + 255.37}$$

[k] $(c_p)_{air} = 0.796\ (c_p)_{N_2} + 0.231\ (c_p)_{O_2}$, where $(c_p)_{N_2}$ and $(c_p)_{O_2}$ are specific heats of nitrogen and air, respectively, available by interpolation from API Report 44, p. 652 (Reference 27).

[l] $(c_p)_{sty}$ vs T,°F, values are available for interpolation on p. 682 of API Report 44 (Reference 27).

[m] Including 20% safety margin.

characteristics given primarily in the Chemical Engineers' Handbook and consistent with the 8-ft. long condenser with 1-inch outside diameter tubes assumed by Enviroscience[33] for cost estimation purposes. Then the total heat transfer area is calculated from the known values of total heat loads and overall heat transfer coefficient using Fourier's general equation. A tabular procedure for calculating heat exchanger size is presented in Table E-13 for styrene in steam and in Table E-14 for styrene in air.

E.5.2 Surface Condenser Cost Estimation Procedure

For styrene in steam, the heat exchanger costs for each stream were obtained from vendors.[36,37,38] For styrene in air, condensation system costs were based on IT Environscience[39] as well as vendor information. A retrofit installation factor of 1.48 (See Table 5-2) was used to estimate installed condenser costs for condensers of 20 ft^2 or less and 2.58 for condensers 125 ft^2 or greater. No additional piping was costed for condensers with less than 20 ft^2 of heat transfer area because the condenser unit is so small (1-2 ft. diameter) that it should be able to be installed adjacent to the source. For condensers with heat transfer areas of 125 ft^2 or greater, piping was costed using the procedures described in Section E-6. Table E-15 presents the estimated total capital and annual operating costs for the condenser system of 20 ft^2 heat transfer area for styrene in steam. Table E-16 presents the procedure for estimating capital and annual operating costs for condensation systems for styrene in air.

E.6 PIPING AND DUCTING DESIGN AND COST ESTIMATION PROCEDURE

Control costs for flare and incinerator systems included costs of piping or ducting to convey the waste gases (vent streams) from the source to a pipeline via a source leg and through a pipeline to the control device. All vent streams were assumed to have sufficient pressure to reach the control device. (A fan is included on the duct, fan, and stack system of the incinerators.)

E.6.1 Piping and Ducting Design Procedure

The pipe or duct diameter for each waste gas stream (individual or combined) was determined by the procedure given in Table E-17. For flows less than 700 scfm, an economic pipe diameter was calculated

Table E-13. PROCEDURE TO CALCULATE HEAT TRANSFER AREA OF AN ISOTHERMAL CONDENSER SYSTEM

Item	Value
Heat exchanger type	Cocurrent shell and tube heat exchanger with the hot fluid in the shell side and the cold fluid in the tube side
Gas stream condition (including temperature (T_1)°F pressure (P_1), psig, and composition)	Obtain from Chapters 2 and 5
Condensation temperature (T_2),°F	a
Total heat load (H), Btu/h	b
Coolant used[c]	water at 85°F, 25 gpm
Temperature rise of coolant, (ΔT),°F	H Btu/h ÷ [(25 gpm x 500 lb/h/gpm) x (1 Btu/lb°F)]
Coolant outlet temperature (T_3),°F	85°F + ΔT
Log mean temperature difference (LMTD),°F	$[(T_1-T_3) - (T_2 - 85)] \div \ln [(T_1-T_3)/(T_2-85)]$
Heat transfer coefficient[d](U)	240 Btu/h ft^2°F
Heat transfer area (A), ft^2	(H)/U(LMTD)

[a]Determine from vapor pressures of styrene and steam and the total gas pressure. Calculate the styrene vapor pressure using Clausius - Clapeyron equation:

$$\ln P/P_o = (\lambda/R)\ (1/T_o - 1/T)$$

where P and P_o are stream pressures, mm Hg; and T and T_o are corresponding temperatures, °K; λ is latent heat, cal/g mole; and R is universal gas constant = 1.99 cal/g mole°K.

The same equation can be rearranged to eliminate λ and R:

$$\frac{\ln(P/P_o)}{\ln(P_1/P_o)} = \frac{(1/T_o - 1/T)}{(1/T_o - 1/T_1)}$$

Using two known values of pressure and temperature, calculate the pressure for an assumed temperature. Proceed by trial-and-error until the temperature which gives a total value of styrene pressure and steam pressure equals to the toal gas pressure.

[b]Total of latent heat of styrene and steam in stream per unit time (Btu/hr): Calculate the latent heat of styrene from Clausius-Clapeyron equation using pressure and temperature values of gas and condensation condition, multiply by lb/hr styrene in stream and add to product of λ (970.3 Btu/lb steam) and lb/hr steam in stream.

[c]Fixed amount of 25 gpm is used in order to maintain turbulent flow.

[d]Obtained using a clean overall heat transfer coefficient (U_c) of 866 Btu/h ft^2°F and a dirt factor (D.F.) of 0.003. The clean overall heat transfer coefficient is obtained using weighted averages (86% steam and 16% styrene) of pure fluid heat transfer coefficients, 1,000 Btu/h ft^2°F for steam and 35 Btu/h ft^2°F for styrene and the following relationship:

$$\frac{1}{U_d} - \frac{1}{U_c} = D.F.$$

Table E-14. PROCEDURES TO CALCULATE HEAT TRANSFER AREA OF A CONDENSATION SYSTEM OF STYRENE IN AIR

Heat exchanger configuration	Try 8" shell with 17 1-inch o.d., 16 gage, 8-feet long brass tubes on 1-1/4" square pitch[a]
Source Identification	Identify the polymer industry and the vent from Chapters 2 and 5
Coolant temperature, T_c,°F	T_{out}-10, rounded to next lower multiple of 5.
Shell-side heat transfer Coefficient (h_o), $\frac{Btu}{hr\text{-}ft^2 - °F}$	Calculate using procedure in Chemical Engineers' Handbook, pp. 10-25 thru 10-28 (Reference 28)[b]
Coolant	Select chilled water at $T_c \geq 35°F$; for $T_{out} \geq 45°F$; ethylene glycol-water brine solutions at $T_c \geq -40°F$, for $T_{out} \geq -30°F$; and Freon-12 or or other direct expansion coolants at $T_c \leq -40°F$, for $T_{out} \leq -30°F$.[c]
Tube-side Reynold's Number (N_{Re})[d]	$(12 \times r_H \times \rho) \div \mu$
Tube-side heat transfer Coefficient (h_o), $\frac{Btu}{hr\text{-}ft^2 - °F}$	Calculate using appropriate equations for forced connection in pipes.[e]
Coolant flow (W_c), lb/hr[f]	$757.9 \times \rho$
Temperature change of coolant (ΔT_c),°F	$Q_{tot} \div (C_p \times W_c)$
Coolant flow (V_c), gpm[g]	94.5
Clean overall heat transfer coefficient (U_c), Btu/ft^2-hr-°F[h]	$[(1.149 \div h_o) + (0.0000839) + (1 \div h_s)]^{-1}$

Table E-14. PROCEDURES TO CALCULATE HEAT TRANSFER AREA OF A CONDENSATION SYSTEM OF STYRENE IN AIR (Continued)

Dirty overall heat transfer coefficient (U_d), Btu/ft^2-hr-°F	$[(1 \div U_c) + 0.001]^{-1}$
Log mean temperature difference (LMTD), °F	$[\Delta T_1 - \Delta T_2) \div \ln (\Delta T_1/\Delta T_2)$
Required heat transfer area (A), ft^2	$Q_{tot} \div (U_D \times LMTD)$; if A > 43.8 ft^2, try a larger heat exchanger[i]
Total tube length required (L_t), ft[j]	$A \div 0.2618$
Required heat exchanger length ($L_{H.E.}$), ft[k]	$L_t \div 17$
Required refrigeration capacity (RC'), tons[l]	$Q_{tot} \div 12{,}000$
Selected refrigeration capacity (RC), tons	RC' or minimum of 1

[a]Condenser and tube characteristics from pp. 11-1 thru 11-18 of the Chemical Engineers' Handbook (Reference 30):
Tube: outer diameter, D_o = 1.00 in.; inner diameter, D_i = 0.870 in.; thickness, X_w = 0.065 in.; specific external surface area = 0.2618 ft^2/ft;
cross-sectional area = 0.004128 ft^2/tube

Condenser: shell inside area, A_i = 0.3553 ft^2;
total tube area, A_o = 0.09272 ft^2;
net area = 0.2626 ft^2, wetted perimeter = 6.54 ft;
hydraulic radius, r_H = 0.04001 ft.,
length, L = 8 ft, total cross-sectional area inside of tubes = 0.004128 ft^2/tube x 17 tubes = 0.07018 ft^2.

[b]Assuming baffle cuts, l_c = 0.25 (shell diameter, D_s); shell outer tube limit, $D_{otl} \approx 7.634$ in.[c] (7/16" clearance for fixed tube sheet for $D_s \leq 24$"); baffle spacing, $b_s = D_s \approx 8$ in.

[c]Coolant characteristics can be interpolated or extrapolated for the coolant temperature, T_c, from The Chemical Engineers' Handbook: pp. 3-71, 206, 213, & 214 (Reference 34) for water; pp. 12-46 thru 12-48 (Reference 31) for ethylene glycol water solutions; and pp. 3-191 and 3-212 thru 3-214 (Reference 31, plus p. E-26 (Reference 32) of The Handbook of Chemistry and Physics for Freon-12 (dichlorodifluoromethane). Characteristics required are dynamic viscosity (μ), density (ρ), specific heat (c_p), thermal conductivity (k), and specific gravity (γ) = ρ/62.42, lb/ft^3.

[d]For coolant velocity, V = 3 fps (3-10 fps recommended by Kern in Process Heat Transfer (Reference 35).

FOOTNOTES FOR Table E-14 (concluded)

[e]From The Chemical Engineers' Handbook, pp. 10-12 thru 10-15 (Reference 29).

(1) For turbulent flow ($N_{Re} \geq 10{,}000$) (from Eq. 10-51):

$$h_o = \frac{0.023 \times V,\ ft/hr \times \rho\ lb/ft^3 \times C_p,\ Btu\text{-}lb\text{-}°F}{(N_{Pr})^{2/3}\ (N_{Re})^{0.2}} \times \left(\frac{\mu b}{\mu w}\right)^{0.14}$$

if $0.7 < N_{Pr} < 700$ & $L/D > 60$; $\left(\frac{\mu d}{\mu w}\right)^{0.44} \approx 1$, if properties at average of bulk (b) & wall (w) temperature.

(2) For transition flow ($2000 < N_{Re} < 10{,}000$) (from Eq. 10-49):

$$h_o = \frac{0.029\ k}{r_H}\ (N_{Re}^{2/3} - 125) N_{Pr}^{1/3} \left[1 + \left(\frac{D}{L}\right)^{2/3}\right]\left(\frac{\mu b}{\mu w}\right)^{0.14}$$

(3) For laminar flow ($N_{Re} < 2100$) (from Eq. 10-40):

$$h_o = \frac{0.465k}{r_H}\ N_{Gz}^{1/3} \left(\frac{\mu b}{\mu w}\right)^{0.14} + 0.87\ (1 + 0.015\ N_{Gz}^{1/3})$$

where $N_{Gz} = (N_{Re} \times N_{Pr} \times 4 \times r_H) \div L$.

[f]For coolant velocity of 3 fps and total tube cross-sectional area of 0.07018 ft^2: 0.07018 ft^2 x 180 ft/min. x ρ , lb/ft^3 x 60 min/hr.

[g]For coolant velocity of 3 fps, 0.07018 ft^2 x 180 ft/min. x 7.48 gal/ft^3.

[h]D_o/D_i = 1.000 in. ÷ 0.870 in. = 1.149;

$$\frac{D_o\ Xw}{K_t D_L} = \frac{0.0542\ ft \times 1.000\ in.}{69.2\ Btu/ft\text{-}hr\text{-}°F \times 0.9335\ in.}$$

where: K_t = thermal conductivity of brass tube (pp. 23-49 ChE Hndbk) (Reference 26)

$D_L = (D_o - D_i) \div \ln (D_o/D_i) = (1.00 - 0.87) \div \ln (1.00/0.87) = 0.9335.$

[i]See heat exchanger configurations for 1-in. o.d., 1-1/4-in. square pitch, T.E.M.A. P or S on p. 11-15 of The Chemical Engineers' Handbook (Reference 30) for 8-ft heat exchangers assumed by Enviroscience for cost basis: 17 tube minimum unit, A = 35.6 ft^2; for 30 tube next larger unit, A = 62.8 ft^2; assume need larger than minimum size for design (Enviroscience costing curve is continuous for all areas) when A = 35.6 + (0.2 heat load design safety margin + 0.1 allowable undersizing) x (62.8 - 35.6) = 43.8 ft^2.

[j]A,ft^2 ÷ 0.2618 ft^2 of tube external surface area/ft of tube.

[k]L_t,ft of tubes ÷ 17 tubes.

[l]12,000 Btu/hr per ton of refrigeration capacity.

Table E-15. CAPITAL AND ANNUAL OPERATING COST ESTIMATES FOR A RETROFIT 20 ft^2 CONDENSER SYSTEM FOR THE STREAMS FROM THE CONTINUOUS POLYSTYRENE MODEL PLANT

Item	Value
Control system	Heat exchanger with a maximum capacity of 20 ft^2 heat transfer area
Capital Cost:	
Purchase cost	$2,000
Installed capital cost[a]	2,960
Annualized cost:	
Operating labor[b]	$1,080
Maintenance[c]	150
Utilities:	
Water[d]	$ 5
Electricity[e]	$ 140
Taxes, insurance, and administration[f]	$ 120
Capital recovery[g]	$ 480
Total annualized cost without recovery credit	$1,980
Total amount of styrene recovered from W lb/hr of styrene	(W lb/hr x 8,000 hr/yr x X heat exchanger efficiency x 90% recovery efficiency from the separator) ÷ 2,000 lb/ton = Y tons/year
Annual styrene recovery credit at $0.3575/lb	Y tons x 2,000 lb/ton x $0.3575/lb = $Z
Total annualized cost after credit	($1,980 - $Z)
Cost effectiveness of emission reduction ($/Mg)	($1,980 - $Z)/[W lb/hr x 8,000 hr/yr x X heat exchanger (VOC reduction) efficiency/2,205 lb/Mg]

[a]Purchase cost times retrofit installation cost factor of 1.48 (see Table 5-2).

[b]Operating labor cost = 1 hr/wk x 52 wk/yr x 1.15 (with supervision/without supervision) x $18/hr (including overtime).

[c]Maintenance cost = 0.05 x (installed capital cost).

[d]Water cost = 25 gpm x 60 min/hr x 8,600 hr/yr x 0.001 make-up/total x $0.30/(1,000 gal) x (1,000 gal)/1,000 gal.

[e]Electricity consumption (equations from Reference 40) and cost:
hydraulic horsepower = 50 ft x (1.0 specific gravity) x 25 gpm/3960 = 0.3157 hp

brake horsepower = 0.3157 hp x 745.7 W/hp x 8,000 hr/yr

x kW/1,000W ÷ 0.65 pump efficiency = 2,900 kWh/yr

Cost = 2,900 kWh/yr x $0.049/kWh

[f]Taxes insurance, and administration cost = 0.04 x (installed capital cost).

[g]Capital recovery factor = 0.1627, for 10 percent interest (before taxes) and 10 year life.

Table E-16. CAPITAL AND ANNUAL OPERATING COST ESTIMATION PROCEDURE FOR CONDENSERS WITH REFRIGERATION

Item	Value
Capital Costs	
Condenser	
Installed cost, Dec. 1979	From Figure E-6 for A
Installed cost, June 1980[a]	Installed cost, Dec. 1979 x 1.047
Installed retrofit cost, June 1980	Installed cost, June 1980 x 1.065, from Table 5-2
Refrigeration	
Installed cost, Dec. 1979	From Fig. E-7 for RC & T_c[b]
Installed cost, June 1980[a]	Installed cost, Dec. 1979 x 1.047
Total Installed Cost, June 1980	Sum of condenser and refrigeration
Annualized Costs[c]	
Operating labor[d]	$1,080
Maintenance materials & labor	0.05 x total installed cost
Utilities	
Electricity, pumping	See footnote e
Electricity, refrigeration	See footnote f
Coolant, make-up	See footnote g
Capital recovery[h]	0.1627 x total installed cost
Taxes, administration & insurance	0.04 x total installed cost
Total annualized cost without recovery credit	Operating labor & maintenance + utilities + capital recovery + taxes, administration & insurance
Styrene recovery credit	2767 x W_s x (% Red'n. ÷ 100)
Net Annualized Cost after recovery credit	Total annualized cost - styrene recovery credit

Footnotes for Table E-16

[a]Updated using Chemical Engineering Plant Cost index from December 1979 (247.6) to June 1980 (259.2).

[b]Costs for the 1 ton minimum refrigeration capacity can be approximated by exp (exp[(0.60784 x ln (hp/ton)) + 0.31169]) .

[c]Cost factors presented in Table 5-3.

[d]Operating labor cost = 1 hr/wk x 52 wk/yr x 1.15 (with supervision/without supervision) x $18/hr (including overtime).

[e]Using Equation 6-2, p. 6-3 in The Chemical Engineers' Handbook (Reference 40) for V = 3 fps (for condensers with a heat transfer area of 20 ft^2 or less and 125 ft^2) or 10 fps (for condensers with a heat transfer area of 185 ft^2), assuming a pumping height of 50 ft. and a pump efficiency of 65%:

$$\frac{50 \text{ ft} \times \gamma \times V_c}{3960 \text{ gpm ft/hp}} \times \frac{0.7457 \text{ kW}}{\text{hp}} \times \frac{8000 \text{ hr/yr}}{0.65 \text{ pump efficiency}} \times \$0.049/\text{kwh}$$

where γ = specific gravity of coolant = $\rho \div 62.42$ lb/ft^3 (the density of water)

V_c = volumetric flow of coolant; equals 94.5 gpm for condensers with heat transfer area of 20 ft^2 or less; equals 472 gpm for condensers with heat transfer area of 125 ft^2; and equals 1,575 gpm for condensers with heat transfer area of 185 ft^2.

[f]

$$\frac{RC' \times (\text{hp/ton of refrigeration for } T_c)}{0.85 \text{ compressor efficiency} \times 0.85 \text{ motor efficiency}} \times \frac{0.7457 \text{ KW}}{\text{hp}} \times 8000 \text{ hr/yr} \times \$0.049/\text{kwh}$$

where (hp/ton of refrigeration) for a particular coolant temperature is given on Fig E-7 for multiples of 20°F between -60 and + 40°F or can be calculated from the curve fit:

$$(\text{hp/ton}) = \exp[-0.1777 + 0.01503 (45-T)]$$

[g]For chilled water, assume 99.9% recycle:
@ 94.5 gpm x 60 min/hr x 8000 hr/yr x 0.001 make-up x $0.30/1000 gal = $14/yr, use $20/yr;

Footnotes for Table E-16 (Concluded)

For ethylene glycol-water brine solutions and Freon-12, assume one replacement per year of coolant in condenser and refrigeration system and coolant volume in condenser and refrigeration twice that of condenser alone.

$$\text{Coolant volume, gal} = A \times 0.004128\ ft^2\ \text{x-sect./tube} \times 7.48\ gal/ft^3 \times (2 \times \text{inside tube volume in condenser}) \div 0.2618\ ft^2\ \text{surface/ft tube} = 0.2359 \times A$$

For ethylene glycol-water brine solutions:

$$\text{cost of coolant} = X_W\ (\$0.30/1000\ gal) + X_{EG}\ (\$0.27/lb \times \rho EG\ lb/ft^3 \div 7.48\ gal/ft^3)$$

$$= \$0.0003\ X_W + \$2.02\ X_{EG}\ \rho EP$$

where: X_W = volume fraction of water in brine solution,
X_{EG} = volume fraction of ethylene glycol in brine solution

For Freon-12 solutions:
cost of coolant = \$8.70/liter x 3.785 liter/gal based on 20 liter lot price of trichlorotrifluoroethane reagent price of \$8.73/liter from Fisher Scientific Co. 1979.

[h]10 percent interest (before taxes) and 10 yr. life.

[i]W_s, lb styrene emitted/hr x 8000 hr/yr x (% Red'n in condenser ÷ 100) x 0.90, fraction of reduction recovered x \$0.3575/lb styrene.

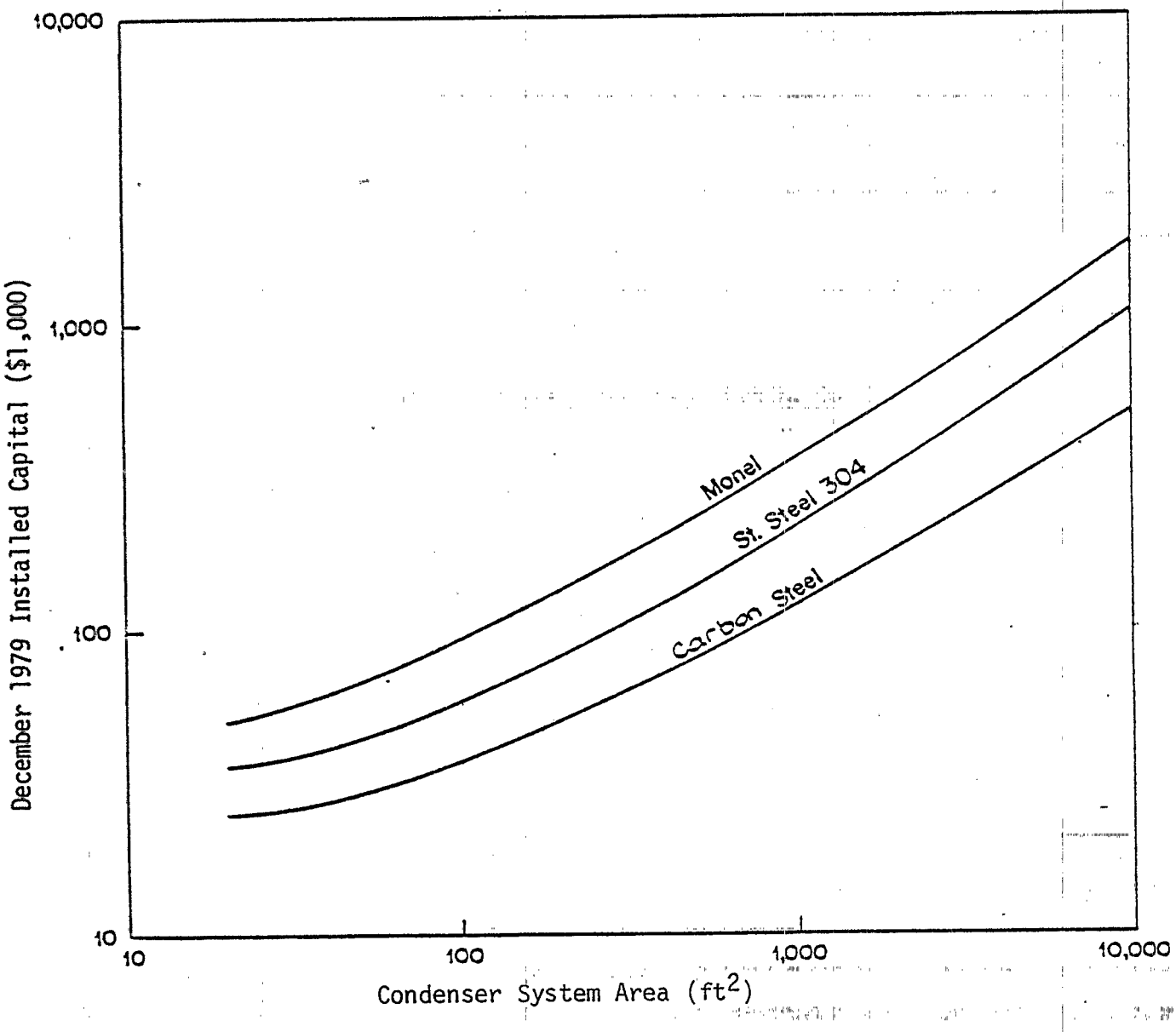

Figure E-6. Installed Capital Cost vs. Condenser Area for Various Materials of Construction for a Complete Condenser Section

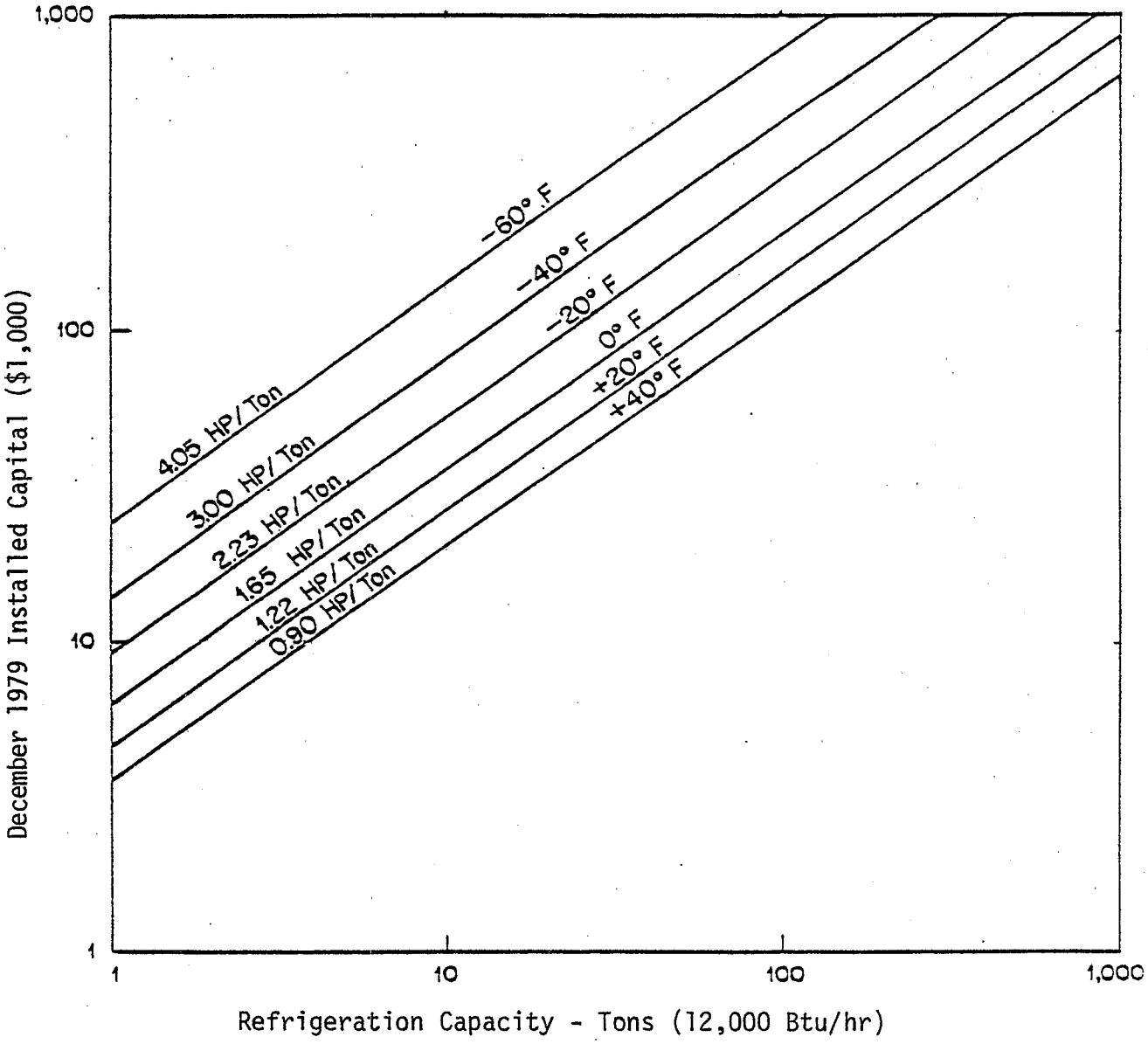

Figure E-7. Installed Capital Costs vs. Refrigeration Capacity at Various Coolant Temperatures for a Complete Refrigeration Section

based on an equation in the Chemical Engineer's Handbook[41] and simplified as suggested by Chontos.[42,43,44] The next larger size (inner diameter) of schedule 40 pipe was selected unless the calculated size was within 10 percent of the difference between the next smaller and next larger standard size. For flows of 700 scfm and greater, duct sizes were calculated assuming a velocity of 2,000 fpm for flows of 60,000 acfm or less and 5,000 fpm for flows greater than 60,000 acfm. Duct sizes that were multiples of 3-inches were used.

E.6.2 Piping and Ducting Cost Estimation Procedure

Piping costs were based on those given in the Richardson Engineering Services Rapid Construction Estimating Cost System[18] as combined for 70 ft. source legs and 500 ft. and 2,000 ft. pipelines for the cost analysis of the Distillation NSPS.[45] (see Tables E-18 and E-19) Ducting costs were calculated based on the installed cost equations given in the GARD Manual.[46] (See Table E-20.)

Costs of source legs were taken or calculated directly from the tables. Costs of pipelines for flares were interpolated for the safe pipeline lengths differing by more than 10 percent from the standard lengths of 70, 500, and 2,000 ft. Installed capital costs were updated to June 1980 using the Chemical Engineering pipes, valves, and fittings index for piping and the fabricated equipment index for ducting.

Table E-17. PIPING AND DUCTING DESIGN PROCEDURE

Item	Value
(1) Pipe diameter, D	
(a) Piping[a]	For source legs: D (in.) = 0.042 x Q (scfm) + 0.472, for $Q < 40$ scfm D (in.) = 0.009 x Q (scfm) + 2.85, for $40 \leq Q < 700$ scfm For pipeline legs: D (in.) = 0.024 x Q (scfm) + 0.549, for $Q < 65$ scfm D (in.) = 4.8 $\log_{10}$ [Q(scfm)] -7.33, for $65 \leq Q < 700$ Select next larger inner diameter of schedule 40 pipe (given in Table E-19) unless calculated size within 10 percent of interval to next larger size.
(b) Ducting[b]	D (in) = $(0.3028)\sqrt{Q(acfm)}$, for $D > 12$ in. or $Q \geq 700$scfm and $Q \leq 60{,}000$ acfm D (in.) = $(0.1915)\sqrt{Q(acfm)}$, for $D > 60{,}000$ acfm Select size that is a multiple of 3 inches.
(2) Pipe length, L	
(a) Flares	Assumed 70-ft. source leg from each source to the pipeline. Assumed separate pipelines for large (≥40,000 scfm) intermittent streams and for all continuous streams together. Selected pipeline length of 70, 500 or 2,000 ft. if calculated safe pipeline length within 10 percent of standard length; if not selected calculated length between standard values.
(b) Incinerators	Assumed 70-ft. source legs from each source to the pipeline. Used duct, fan, and stack cost from Enviroscience,[16] which assumes a 150-ft. duct cost based on the GARD Manual (Reference 46)

[a]Economic pipe diameter equations from Reference 44 (which is based upon References 41 and 42).

[b]From continuity equation $Q = \frac{\pi}{4} D^2 V$; assumed velocity, V, of 2,000 fpm for lower flows and 5,000 fpm for higher flows.

Table E-18. PIPING COMPONENTS[a]

Equipment Type	Number of Equipment Type in Pipe Leg Type			
	Source	Compressor	Pipeline (500)	Pipeline (2,000)
Check Valves	1	1	1	1
Gate Valves	4	2	3	3
Control Valves	1	-	1	1
Strainers	1	1	1	1
Elbows	8	6	6	6
Tees	6	2	3	3
Flanges	15	10	20	35
Drip Leg Valves	1	1	1	1
Expansion Fittings	2	1	5	20
Bolt and Gasket Sets	15	12	21	38
Hangers	9	4	50	200
Field Welds	18	12	40	120
Pipe, Schedule 40 (ft)	70	20	500	2,000

[a]From Reference 44.

Table E-19. INSTALLED PIPING COSTS[a]

Pipe Diameter (ft)	Cost in August 1978 Dollars for Pipe Leg Type			
	(70') Source Leg	(20') Compressor Leg	500' Pipeline	2,000' Pipeline
0.0411	2,200	1,050	2,275	4,360
0.0518	2,262	1,085	2,555	4,955
0.0647	2,330	1,120	2,660	5,255
0.0874	2,470	1,170	2,870	5,800
0.1342	2,725	1,375	3,485	7,235
0.1722	3,340	1,490	3,990	8,190
0.2057	5,644	2,725	5,765	10,690
0.2557	6,045	2,900	6,640	12,500
0.2957	7,428	3,465	7,925	14,825
0.3355	7,786	3,830	9,000	16,870
0.4206	9,750	4,800	11,080	21,430
0.5054	11,415	5,570	13,220	26,120
0.6771	16,025	7,715	17,865	34,545
0.8542	23,925	11,440	26,500	48,920
1.021	33,133	18,280	36,320	65,000
1.111	45,750	20,900	48,680	83,400
1.281	58,680	26,670	61,554	96,850
1.448	72,800	32,670	77,450	123,200
1.604	92,581	41,140	97,010	149,420
1.937	121,200	54,205	124,075	186,385

[a]From SOCMI-Distillation NSPS Computer Program "DM Pipe" (Reference 45) based on component costs from Reference 18.

Table E-20. INSTALLED DUCTING COST EQUATIONS, DECEMBER 1977 DOLLARS[a]

Pipe Wall Thickness (in)[b]	Pipe Leg Type as a Function of Diameter, D, (in.)				Permissable Diameters (in.)
	Source Leg	Compressor Leg	500 ft. Pipeline	2,000 ft. Pipeline	
1/4	$2074 + 396.8\ D + 2.40\ D^2$	$1054 + 202.5\ D + 1.600\ D^2$	$67{,}53 + 1058\ D + 1.68\ D^2$	$-3007 + 3713\ D + 1.68\ D^2$	$28 \le D \le 122$
3/16	$2083 + 352.2\ D + 2.050\ D^2$	$1052 + 183.5\ D + 1.367\ D^2$	$204.3 + 846.7\ D + 1.435\ D^2$	$-2436 + 2901\ D + 1.435\ D^2$	$30 \le D \le 90$
1/8	$2198 + 285.8\ D + 1.76\ D^2$	$1121 + 146.7\ D + 1.174\ D^2$	$420 + 673.9\ D + 1.232\ D^2$	$-1770 + 2309\ D + 1.232\ D^2$	$12 \le D \le 81$

[a]From equations for carbon steel pipe components (straight duct, elbows, tees, and transistions) given in the GARD Manual (Reference 46) combined for piping components in each pipe leg type as shown in Table E-18.

[b]After examining dependence of wall thickness, t, upon pressure, (psi) and diameter, D (in.):

$$t\ (\text{in.}) = \frac{p \times D}{[2[18{,}200 \times 0.50] + (0.4 \times p)]} + 0.16$$

for cases where pressure was known.
assumed = 1/4" for $p \ge 74.7$ psia or $D \ge 11.5$ ft.
= 3/16" for $Q \ge 30{,}000$ acfm, (0-10 psig)
= 1/8" for $Q < 30{,}000$ acfm

E.7 REFERENCES FOR APPENDIX E

1. Kalcevic, V. Control Device Evaluation: Flares and the Use of Emissions as Fuels. In: Organic Chemical Manufacturing Volume 4: Combustion Control Devices. U.S. Environmental Protection Agency. Research Triangle Park, N.C. Publication No. EPA-450/3-80-026. December 1980.

2. Reference 1, p. IV-4.

3. Memo from Sarausa, A.I., Energy and Environmental Analysis, Inc. (EEA), to Polymers and Resins File. May 12, 1982. Flare costing program (FLACOS).

4. Telecon. Siebert, Paul, PES with Straitz, John III, National Air Oil Burner Company, Inc. (NAO). November 1982. Design, operating requirements, and costs of elevated flares.

5. Telecon. Siebert, Paul, PES with Fowler, Ed, NAO. November 5, 1982. Purchase costs and operating requirements of elevated flares.

6. Telecon. Siebert, Paul, PES, with Keller, Mike, John Zink Co. August 13, 1982. Clarification of comments on draft polymers and resins CTG document.

7. Telecon. Siebert, Paul, PES with Fowler, Ed, NAO. November 17, 1982. Purchase costs and operating requirements of elevated flares.

8. Memo from Senyk, David, EEA, to EB/S Files. September 17, 1981. Piping and compressor cost and annualized cost parameters used in the determination of compliance costs for the EB/S industry.

9. Memo from Mascone, D.C., EPA, to Farmer, J.R., EPA. June 11, 1980. Thermal incinerator performance for NSPS.

10. Blackburn, J.W. Control Device Evaluation: Thermal Oxidation. In: Chemical Manufacturing Volume 4: Combustion Control Devices. U.S. Environmental Protection Agency, Research Triangle Park, N.C. Publication No. EPA-450/3-80-026, December 1980. Fig. III-2, p. III-8.

11. Reference 10, Fig. A-1, p. A-3.

12. Air Oxidation Processes in Synthetic Organic Chemical Manufacturing Industry - Background Information for Proposed Standards. U.S. Environmental Protection Agency, Research Triangle Park, N.C. Draft EIS. August 1981. p. 8-9.

13. EEA. Distillation NSPS Thermal Incinerator Costing Computer Program (DSINCIN). May 1981. p. 4.

14. Reference 10, p. I-2.

15. Reference 12, p. G-3 and G-4.

16. Reference 10, Fig. V-15, curve 3, p. V-18.

17. Neverill, R.B. Capital and Operating Costs of Selected Air Pollution Control Systems. U.S. Environmental Protection Agency, Research Triangle Park, N.C. Publication No. EPA-450/5-80-002. December 1978.

18. Richardson Engineering Services. Process Plant Construction Cost Estimating Standards, 1980-1981. 1980.

19. Telecon. Katari, Vishnu, Pacific Environmental Services, Inc. with Tucker, Larry, Met-Pro Systems Division. October 19, 1982. Catalytic incinerator system cost estimates.

20. Telecon. Katari, Vishnu, Pacific Environmental Services, Inc., with Kroehling, John, DuPont, Torvex Catalytic Reactor Company. October 19, 1982. Catalytic incinerator system cost estimates.

21. Letter from Kroehling, John, DuPont, Torvex Catalytic Reactor Company, to Katari, V., PES. October 19, 1982. Catalytic incinerator system cost estimates.

22. Key, J.A. Control Device Evaluation: Catalytic Oxidation. In: Chemical Manufacturing Volume 4: Combustion Control Devices. U.S. Environmental Protection Agency. Research Triangle Park, N.C. Publication No. EPA-450/3-80-026. December 1980.

23. Telecon. Siebert, Paul, Pacific Environmental Services, Inc., with Kenson, Robert, Met-Pro Corporation, Systems Division. July 22, 1983. Minimum size catalytic incinerator units.

24. Steam: Its Generation and Use. New York, Babcock & Wilcox Company, 1975. p. 6-10.

25. Reference 10, Fig. V-15, curve 3, p. V-18.

26. Perry, R.H. and C.H. Chilton, eds. Chemical Engineers' Handbook, fifth edition. New York, McGraw-Hill Book Company. 1973. p. 3-59

27. Rossini, F.D. et al. Selected Values of Physical and Thermodynamic Properties of Hydrocarbons and Related Compounds, Comprising the Tables of API Research Project 44. Pittsburg, Carnegie Press, 1953. pp. 652 and 682.

28. Reference 26, pp. 10-25 through 10-28.

29. Reference 26, pp. 10-12 through 10-15.

30. Reference 26, pp. 11-1 through 11-18.

31. Reference 26, pp. 3-191, 3-212 through 3-214, and 12-46 through 12-48.

32. Weast, R.C., ed. Handbook of Chemistry and Physics, fifty-third edition. Cleveland, The Chemical Rubber Company. 1972. p. E-26.

33. Erikson, D.G. Control Device Evaluation: Condensation. In: Organic Chemical Manufacturing Volume 5: Adsorpiton, Condensation and Absorption Devices. U.S. Environmental Protection Agency, Research Triangle Park, N.C. Publication No. EPA-450/3-80-027. December 1980. p. A-3.

34. Reference 26, pp. 3-71, 3-206, 3-213, and 3-214.

35. Kern, D.Q. Process Heat Transfer. New York, McGraw-Hill Book Company, 1950. p. 306.

36. Telecon. Katari, Vishnu, Pacific Environmental Services, Inc., with Mr. Ruck, Graham Company. September 29, 1982. Heat exchanger system cost estimates.

37. Telecon. Katari, Vishnu, Pacific Environmental Services, Inc., with Clower, Dove, Adams Brothers, a representative of Graham Company. September 30, 1982. Heat exchanger system cost estimates.

38. Telecon. Katari, Vishnu, Pacific Environmental Services, Inc., with Mahan, Randy, Brown Fintube Company. October 7, 1982. Heat exchanger system cost estimates.

39. Reference 33, pp. A-4 and A-5.

40. Reference 26, p. 6-3.

41. Reference 26, p. 5-31.

42. Chontos, L.W. Find Economic Pipe Diameter via Improved Formula. Chemical Engineering. 87(12):139-142. June 16, 1980.

43. Memo from Desai, Tarun, EEA, to EB/S Files. March 16, 1982. Procedure to estimate piping costs.

44. Memo from Kawecki, Tom, EEA, to SOCMI Distillation File. November 13, 1981. Distillation pipeline costing model documentation.

45. EEA. SOCMI Distillation NSPS Pipeline Costing Computer Program (DMPIPE), 1981.

46. Reference 17, Section 4.2, p. 4-15 through 4-28.

APPENDIX F

CALCULATION OF UNCONTROLLED EMISSION RATES AT SPECIFIC COST EFFECTIVENESSES

APPENDIX F. CALCULATION OF UNCONTROLLED EMISSION RATES AT SPECIFIC COST EFFECTIVENESSES

This appendix details the procedures used to calculate the uncontrolled emission rates equivalent to $1,000 per Mg, $2,000 per Mg, and $3,000 per Mg when RACT is applied. Section F.1 describes the procedures for flares, thermal incinerators, and catalytic incinerators. Section F.2 describes the procedures for condensers.

F.1. PROCEDURE FOR INCINERATION DEVICES

For the polypropylene and high-density polyethylene model process sections, the question asked was what uncontrolled VOC emission rates when reduced 98 percent (i.e., RACT level) corresponded to cost effectivenesses of $1,000 per Mg, $2,000 per Mg, and $3,000 per Mg. The following sections describe the procedures used to calculate these uncontrolled emission rates.

F.1.1 General Procedure

The general procedure used is as follows:

First. For each process section identified in Tables 4-1 and 4-2, the emission characteristics identified in Chapter 2 of the CTG and Chapter 6 of the background information document for the polymer manufacturing industry and the control costs identified in Chapter 5 of the CTG were used as the starting point. Table F-1 summarizes the pertinent information.

Second. Uncontrolled emissions were adjusted proportionally by changing volumetric flow proportional to the initial flow. Concentration of the emissions was assumed to remain constant. Uncontrolled emissions needed to be adjusted downward or upward depending upon the initial cost effectiveness. For example, if the initial cost effectiveness was $1,500/Mg, the uncontrolled emissions would be higher than the initial uncontrolled emissions in order to correspond to $1,000/Mg and lower than the initial uncontrolled emissions in order to correspond to $2,000/Mg and $3,000/Mg.

Third. Annual costs were adjusted to take into account the new flow conditions, which affect control device costs. Annual costs were divided into three components: (1) those related to capital costs (C_1), (2) those related to operating costs (C_2), and (3) minimum and/or constant costs (C_3).

Table F-1. INITIAL EMISSION CHARACTERISTICS AND CONTROL COSTS FOR CALCULATION OF UNCONTROLLED EMISSION RATES

Polymer	Process Section[a]	Emission Rate, kg Voc/Mg product	Emissions, Mg/yr		Flow, scfm[b]		Total Annual Costs, $/yr		Cost-Effectiveness,[c] $/Mg	
			within Line	across Lines	within Line	across Lines	within Line	across Lines	within Line	across Lines
Polypropylene	RMP	0.07	3	10	0.0627	0.188	20,418	21,793	6,945	2,224
	PR	4.07	191	574	7.175	21.526	21,409	24,961	114	44
	MR	30	1,410	4,230	43.46	130.4	30,403	53,824	22	13
	PF	2.6	122	367	886.3[d]	2,658.8[d]	118,510	130,770	991	364
High-Density Polyethylene	MR	12.7	906	2,718	69.63	208.9	28,904	47,954	33	18
	PF	0.406	29	87	251.5[d]	754.6[d]	56,140	71,600	1,975	840

[a] RMP = raw material preparation; PR = polymerization reaction; MR = material recovery; PF = product finishing.

[b] Flow proportioned directly to ratio of model plant capacities in the CTG and the background information document for the polymers and resins NSPS.

[c] Based on 98 percent reduction of uncontrolled annual emissions.

[d] Flows include combustion air.

Table F-2 summarizes these costs for each of the two polymers. The annual costs were adjusted as follows:

- Capital-related costs, C_1, were adjusted using the equation $\left(\frac{Vx}{V_I}\right)^{0.6}$ where: V_I = total initial volume of flow from model process section and

  V_x = adjusted flow rate.

- Operating-related costs, C_2, were adjusted using the equation $\frac{Vx}{V_I}$.

Capital-related costs included capital recovery, maintenance, taxes, insurance and administration charges. Operating-related costs included utilities (e.g., natural gas, steam, electricity). Operating labor was assumed to be constant.

Fourth. As flow rates vary, the size of the control device required will also vary. No matter how small the flow, however, there are certain minimum size control devices available; thus, control device costs do not approach zero as flows become very small. In addition, some utility requirements, such as natural gas purge rates, may be constant, or even increase as flow rates become increasingly smaller. Finally, a different control device design may be more cost effective as flow rates change. For example, as flow rates approach 1.46 scfm (70°F), a change in flare design was assumed to occur where a flare with a fluidic seal was used for flows less than 1.46 scfm. Table F-3 summarizes the basic minimum costs associated with the various control devices at flow rates that affect design criteria.

Fifth. Using the above information and procedures, the following basic equation was solved for V_x for each process section:

$$\frac{C_1'\left(\frac{Vx}{V_1}\right)^{0.6} + C_2'\left(\frac{Vx}{V_1}\right) + C_3'}{C_4'\left(\frac{Vx-V_2}{V_1-V_2}\right) + C_5'} = \$1{,}000/\text{Mg};\ \$2{,}000/\text{Mg};\ \text{and } \$3{,}000/\text{Mg}$$

where: C_1' = the difference between the capital-related costs of the control device controlling V_1 and the capital-related costs of the control device controlling V_2.

Table F-2. SUMMARY OF ANNUAL COSTS, $

Polymer	Process Section[a]	ANNUAL COSTS Capital-Related (C_1)	Operating-Related (C_2)	Constant (C_3)	Total
Polypropylene	RMP	4,964	4,294	11,160	20,418
		6,304	4,329	11,160	21,793
	PR	4,928	5,321	11,160	21,409
		6,391	7,410	11,160	24,961
	MR	7,364	11,879	11,160	30,403
		15,574	27,090	11,160	53,824
	PF	95,400	1,510	21,600	118,510
		104,640	4,530	21,600	130,770
High-Density Polyethylene	MR	7,236	10,508	11,160	28,904
		13,820	22,974	11,160	47,954
	PF	37,890	1,550	16,700	56,140
		50,960	3,940	16,700	71,600

[a] RMP = raw materials preparation; PR = polymerization reaction; MR = material recovery; PF = product finishing.

Table F-3. BASIC MINIMUM COSTS AT VARIOUS FLOW RATES[a]

Control Device	Flow, scfm	ANNUAL COSTS, $ Capital-Related	Operating-Related	Constant	Total
Flare, within line	1.49	4,887[b]	4,276[c]	11,160	20,323[c]
	1.46	4,964[d]	4,276[c]	11,160	20,400[c]
	0.81	4,964[d]	4,276[c]	11,160	20,400[c]
	0.03	4,964[d]	4,276[c]	11,160	20,400[c]
Flare, across lines	1.49	6,208[b]	4,276[c]	11,160	21,644[c]
	1.46	6,304[d]	4,276[c]	11,160	21,740[c]
	0.81	6,304[d]	4,276[c]	11,160	21,740[c]
	0.03	6,304[d]	4,276[c]	11,160	21,740[c]
Thermal Incinerator - within line	32.19	75,240	55	21,600	96,895
- across lines	96.58	78,000	160	21,600	99,760
Catalytic Incinerator - within line	754.6	42,260	3,940	16,700	62,900
	150	37,260	1,470	16,700	55,430
- across lines	500	45,480	2,620	16,700	64,800
	150	43,060	1,730	16,700	61,490

[a] The minimum costs for flares are based on a single emission stream (i.e., one source leg) per process section. If more than one emission stream emanates from a process section, then minimum capital costs will be higher than those reported in the table. The increase in capital-related costs is about $690 per additional source leg at 1.49 scfm and about $670 per additional source leg at lower flows. The minimum incinerator costs are specific to the process sections for which they were costed.

[b] Flare without a fluidic seal.

[c] Add steam costs at 1.49, 1.46, 0.81, and 0.03 scfm. Actual cost is dependent on molecular weight of gas stream and weight percent of VOC.

[d] Flare with fluidic seal.

C'_2 = the difference between the operating-related costs for the control device controlling V_1 and the operating-related costs of the control device controlling V_2.

C'_3 = the minimum costs associated with controlling V_2.

C'_4 = the difference in emission reduction associated with controlling emissions at V_1 and emissions at V_2.

C'_5 = the emission reduction at V_2.

V_1 = the initial, or higher, flow rate.

V_2 = the flow rate at the lower end of the design range.

V_x = Flow rate to be solved for.

Table F-4 summarizes the coefficients used in the calculations.

Sixth. Once the flow rates were found, the uncontrolled emission rates were calculated by the following equation:

$$\frac{V_x}{V_I} \times ER$$

where:

V_x = flow rate at \$1,000/Mg (\$2,000/Mg, \$3,000/Mg)
V_I = initial flow rate from process section
ER = initial uncontrolled emission rate.

Table F-5 summarizes these results.

F.2. PROCEDURES FOR CONDENSERS

In calculating the uncontrolled emission rates for polystyrene, the general question that was asked was: What uncontrolled emission rate, when controlled to 0.12 kg VOC per Mg of product (i.e., to the RACT level), yields a cost effectiveness of \$1,000 per Mg (\$2,000 per Mg, and \$3,000 per Mg)? This is slightly different from incineration where, regardless of the uncontrolled emission rate, 98 percent VOC reduction was assumed. For polystyrene, the effective percent emission reduction varies as the uncontrolled emission varies. The following paragraphs detail the procedures used to calculate the uncontrolled emission rates associated with the three cost effectivenesses.

Table F-4. SUMMARY OF COEFFICIENTS

Polymer	Process Section	Cost Effectiveness, $/Mg	Coefficient V_1	V_2	C_1	C_2	C_3	C_4	C_5
Polypropylene - within line	RMP	1,000, 2,000, 3,000	0.81	0.0627	0	212	20,418	38.428	3.224
	PR	1,000, 2,000, 3,000	0.81	0.03	0	114	20,404	20.376	0.784
	MR	1,000, 2,000, 3,000	0.81	0.03	0	138	22,415	24.796	0.954
	PF	1,000, 2,000, 3,000	886.3	32.19	20,160	1,455	96,895	115.406	4.35
- across lines	RMP	1,000, 2,000	0.81	0.188	0	177	21,793	32	9.67
		3,000	0.188	0.03	0	44	21,749	8.129	1.5435
	PR	1,000	1.46	0.81	0	95	21,858	16.985	21.16
		2,000, 3,000	0.81	0.03	0	114	21,744	20.376	0.784
	MR	1,000	1.46	0.81	0	113	27,916	20.66	25.75
		2,000, 3,000	0.81	0.03	0	138	27,778	24.796	0.954
	PF	1,000, 2,000, 3,000	2658.8	96.58	26,640	4,370	99,760	346.218	13.05
High-Density Polyehtylene - within line	MR	1,000	69.63	1.49	2,349	6,099	20,456	868.41	18.99
		2,000, 3,000	0.81	0.03	0	69	20,403	9.94	0.38
	PF	1,000	754.6	251.5	4,370	2,390	56,140	56.738	28.369
		2,000, 3,000	251.5	150	630	80	55,430	11.449	16.92
- across lines	MR	1,000	208.9	1.49	7,555	18,565	21,834	2,644.45	18.99
		2,000	1.46	0.81	0	59	21,812	8.29	10.32
		3,000	0.81	0.03	0	69	21,743	9.94	0.38
	PF	1,000	754.6	500	5,480	1,320	64,800	28.728	56.418
		2,000, 3,000	500	150	2,420	890	61,490	39.493	16.925

Table F-5. SUMMARY OF COST EFFECTIVE FLOWS AND EMISSION RATES, POLYPROPYLENE AND HIGH-DENSITY POLYETHYLENE PLANTS

Polymer	Process Section	Cost Effectiveness	V_X ÷	V_I x	ER =	Uncontrolled Emission Rate	Annual Emissions (x relevant capacity)
Polypropylene		1,000	0.3989			0.445	20.93
- within line	RMP	2,000	0.1989	0.0627	0.07	0.222	10.44
		3,000	0.1325			0.1479	6.95
		1,000	0.7852			0.445	20.93
	PR	2,000	0.3915	7.175	4.1	0.222	10.44
		3,000	0.2608			0.1479	6.95
		1,000	0.7088			0.489	22.996
	MR	2,000	0.3535	43.46	30	0.244	11.468
		3,000	0.2354			0.162	7.637
		1,000	875.85			2.569	120.74
	PF	2,000	406.39	886.3	2.6	1.192	56.02
		3,000	262.67			0.771	36.237
- across lines		1,000	0.4249			0.1582	22.31
	RMP	2,000	0.2119	0.188	0.07	0.0789	11.12
		3,000	0.1411			0.0525	7.41
		1,000	0.83665			0.1582	22.31
	PR	2,000	0.4172	21.526	4.1	0.789	11.12
		3,000	0.2779			0.0525	7.41
		1,000	0.8785			0.2021	28.497
	MR	2,000	0.438	130.4	30	0.1007	14.21
		3,000	0.29175			0.0671	9.464
		1,000	841.6			0.823	116.04
	PF	2,000	398.4	2,658.8	2.6	0.389	54.849
		3,000	259.35			0.254	35.814
High-Density Polyethylene							
- within line		1,000	1.6095			0.2936	20.93
	MR	2,000	0.8033	69.63	12.7	0.1465	10.45
		3,000	0.535			0.0976	6.96
		1,000	537.4			0.8675	61.85
	PF	2,000	248.8	251.5	0.406	0.4016	28.63
		3,000	164.38			0.2654	18.92
- across lines		1,000	1.7245			0.1048	22.44
	MR	2,000	0.856	208.9	12.7	0.052	11.14
		3,000	0.5701			0.0347	7.42
		1,000	608.4			0.3273	70.04
	PF	2,000	279.9	754.6	0.406	0.1506	32.23
		3,000	183.67			0.0988	21.14

F.2.1 Styrene-in-Steam Emissions

The basic equation for calculating cost effectiveness is as as follows:

(1) $$CE = \frac{AC - (0.9\ ERed \times RC)}{ERed}$$

where: CE = cost effectiveness, $/Mg

AC = annualized cost of condenser to reduce uncontrolled emissions to 0.12 kg VOC/Mg product, $/yr

RC = recovery credit, $/Mg, = $0.788/kg of styrene

0.9 = efficiency of actually recovering the styrene from the condenser

ERed = annual emission reduction from uncontrolled to 0.12 kg VOC/Mg product, Mg/yr

For polystyrene, we are already dealing with a minimum-size condenser and operating requirements (which were assumed constant) when the uncontrolled emission rate is at 3.09 kg VOC/Mg product. In order to get a cost effectiveness of $1,000 per Mg, a smaller uncontrolled emission rate is needed. Thus, annualized costs associated with polystyrene are a constant - equal to $8,300.

Emission reduction, in general, can be calculated with the following equation:

(2) ERed = (Emission Rate x Capacity) - (0.12 x Capacity)

Capacity is given: 36.75 Gg for a process line and 73.5 Gg for the plant. Thus the above equation reduces to:

For single process line:

(3) $$ERed = (ER \times 36.75) - (0.12 \times 36.75)$$
$$= 36.75\ ER - 4.41$$

For two process lines:

(4) $$ERed = (ER \times 73.5) - (0.12 \times 73.5)$$
$$= 73.5\ ER - 8.82$$

Inserting the above information into the general cost-effective equation (1), the following equation is derived:

For a single process line:

$$(5) \qquad CE = \frac{\$8{,}300 - [36.75\ ER - 4.41]\ (0.9)\ [\$788/kg]}{(36.75\ ER - 4.41)}$$

For two process lines:

$$(6) \qquad CE = \frac{\$8{,}300 - [73.5\ ER - 8.82]\ (0.9)\ [\$788/kg]}{(73.5\ ER - 8.82)}$$

As we know CE (i.e., $1,000/Mg; $2,000/Mg; or $3,000/Mg), we can solve directly for ER. Simplifying the above equations (5 and 6), we get:

For a single process line:

$$(7) \qquad ER = \frac{11{,}428 + 4.41\ CE}{26{,}063 + 36.75\ CE}$$

For two process lines (i.e., the model plant):

$$(8) \qquad ER = \frac{14{,}555 + 8.82\ CE}{52{,}126 + 73.5\ CE}$$

Substituting $1,000/Mg, $2,000/Mg, and $3,000/Mg into the last two equations (7 and 8), yields the following results:

	Emission Rate, kg VOC/Mg Product	
	Single Line	Two Line
$1,000/Mg	0.2521	0.1861
$2,000/Mg	0.2034	0.1617
$3,000/Mg	0.1809	0.1504

F.2.2 Styrene-in-Air Emissions

As with styrene-in-steam emissions, the basic equation for calculating cost effectiveness is as follows:

$$(9) \quad CE = \frac{AC - (0.9\ ERed \times RC)}{ERed}$$

where:

CE = cost effectiveness, \$/Mg

AC = annualized costs, \$/yr

0.9 = efficiency of collecting recovered styrene

ERed = annual emission reduction, Mg/yr

RC = recovery credit, \$/Mg of styrene recovered

In calculating the cost effectiveness numbers and the uncontrolled emission rates for the "across line" analysis, costs were initially developed for two uncontrolled emission rates: 0.2 kg VOC/Mg product and 0.15 kg VOC/Mg product. The resulting costs are summarized in Table F-6.

As seen in Table F-6, the uncontrolled emission rates associated with \$1,000/Mg, \$2,000/Mg, and \$3,000/Mg lie between 0.2 and 0.15 kg VOC/Mg product. Using the general equation (9) above and assuming that refrigeration electricity and recovery credit vary proportionally with emission rate, the following equation is developed:

$$(10) \quad CE = \frac{AC' + \left[\left(\frac{ER - 0.15}{0.2 - 0.15}\right) \times \left(RElec - RElec'\right)\right] + RElec' - \left[\left(\frac{ER - 0.15}{0.2 - 0.15}\right) \times \left(RC - RC'\right)\right] - RC'}{ERed' + \left[\left(\frac{ER - 0.15}{0.2 - 0.15}\right) \times \left(ERed - ERed'\right)\right]}$$

where:

AC' = Constant costs associated with an uncontrolled emission rate of 0.15 kg VOC/Mg product

RElec = Refrigeration electricity associated with an uncontrolled emission rate of 0.2 kg VOC/Mg product

RElec' = Refrigeration electricity associated with an uncontrolled emission rate of 0.15 kg VOC/Mg product

RC = Recovery credit, \$/yr, associated with an uncontrolled emission rate of 0.2 kg VOC/Mg product

RC' = Recovery credit, \$/yr, associated with an uncontrolled

ERed = Annual emission reduction associated with an uncontrolled emission rate of 0.2 kg VOC/Mg product

ERed' = Annual emission reduction associated with an uncontrolled emission rate of 0.15 kg VOC/Mg product

ER = Emission rate to be solved for, kg VOC/Mg product

Table F-6. CONTROL COSTS FOR STYRENE-IN-AIR EMISSIONS

CONTROL	Uncontrolled Emission Rate, kg/Mg	Annualized Costs, $										
		Labor	Maintenance	Pumping Electricity	Refrigeration Electricity	Make-up Coolant	TIA	CRF	Recovery Credit	Total	Annual Emission Reduction,[a] Mg/yr	Cost Effectiveness, $/Mg
Across Lines	0.15	1,080	1,620	540	20	15	1,290	5,260	-1,560	8,265	2.205	3,750
	0.2	1,080	1,620	540	30	15	1,290	5,260	-4,170	5,665	5.88	960
Within Lines	0.15	1,080	1,620	540	10	15	1,290	5,260	-780	9,035	1.1025	8,190
	0.2	1,080	1,620	540	15	15	1,290	5,260	-2,085	7,735	2.94	2,630
	3.09	15,770	4,720	2,810	2,310	65	3,780	15,370	-77,485	-32,660	109.15	-300

[a]To 0.12 kg VOC/Mg product.

Substituting the values from Table F-6 into equation 10 and then simplifying, yields the following equations:

For across lines:

(11) $$CE = \frac{16{,}065 - 52{,}000\ ER}{73.5\ ER - 8.82}$$

For within line ($3,000/Mg only):

(12) $$CE = \frac{12{,}950 - 26{,}000\ ER}{36.75\ ER - 4.41}$$

Solving for ER, equations 11 and 12 become:

For across lines:

(13) $$ER = \frac{16{,}065 + 8.82\ CE}{52{,}000 + 73.5\ CE}$$

For within line ($3,000/Mg only):

(14) $$ER = \frac{12{,}950 + 4.41\ CE}{26{,}000 + 36.75\ CE}$$

For within line uncontrolled emission rates equivalent to $1,000/Mg and $2,000/Mg, the calculations are complicated by the changing size of the condenser. (All previous condenser calculations assumed the use of a minimum size condenser). A cost-effectiveness equation was developed to calculate the particular uncontrolled emission rates, which are known to lie between 3.09 kg VOC/Mg product and 0.2 kg VOC/Mg (see last column in Table F-6).

To start developing this equation, we know that at minimum the costs and emission reduction are equivalent to those when the emission rate is 0.2 kg VOC/Mg product. These numbers provide a base, or minimum, from which to start. In addition, we know that at most costs and emission reduction are equivalent to those when the emission rate is 3.09 kg VOC/Mg product. The primary calculation is to determine how costs vary from the minimum (i.e., at 0.2 kg/Mg) to the maximum (i.e., at 3.09 kg/Mg). We know that emission reduction, and, thus, recovery credit, is proportional to the emission factors; that is, there is a linear relationship between emission factor, emission reduction, and recovery credit. However, the annualized costs associated with increasing

condenser sizes are not necessarily linear. Therefore, we assumed that the costs varied exponentially with the ratio of the emission factors between the costs at 3.09 kg/Mg and 0.2 kg/Mg. The exponents were calculated using the following equation:

(15)
$$\exp = \frac{\ln\left(\frac{AC_1}{AC_2}\right)}{\ln\left(\frac{ER_1 - 0.12}{ER_2 - 0.12}\right)}$$

where: AC_1 = the relevant annualized costs associated with ER_1

AC_2 = the relevant annualized costs associated with ER_2

ER_1 = 3.09 kg VOC/Mg product

ER_2 = 0.2 kg VOC/Mg product

The annualized costs were grouped as follows: (a) capital related (maintenance, taxes, insurance, administration, and capital recovery charge, (b) labor, (c) pumping electricity and make-up coolant, and (d) refrigeration coolant. Table F-7 summarizes the costs and resulting exponents.

Using the exponents from Table F-7 and the costs from Table F-6, the following cost-effectiveness equation was developed:

(16)
$$CE = \frac{(23{,}870 - 8{,}170)\left(\frac{ER - 0.2}{3.09-0.2}\right)^{0.3} + 8{,}170 + (15{,}770 - 1{,}080)\left(\frac{ER - 0.2}{3.09-0.2}\right)^{0.75} + 1{,}080 + (2{,}875 - 555)\left(\frac{ER - 0.2}{3.09-0.2}\right)^{0.46} + 555 + (2{,}310 - 15)\left(\frac{ER - 0.2}{3.09-0.2}\right)^{1.4} + 15 - (77{,}485 - 2{,}085)\left(\frac{ER - 0.2}{3.09-0.2}\right) - 2{,}085}{106.21\left(\frac{ER - 0.2}{3.09-0.2}\right) + 2.94}$$

where: $(23{,}870 - 8{,}170)\left(\frac{ER - 0.2}{3.09 - 0.2}\right)^{0.3}$ = Incremental maintenance, taxes, insurance, etc. costs associated with an uncontrolled emission rate (ER) higher than 0.2 kg VOC/Mg product, $

Table 7. EXPONENTS USED FOR CONDENSER WITHIN LINE ANALYSIS, $1,000/Mg and $2,000/Mg

Item	Emission Rate	Annualized Cost	Exponent
Maintenance	3.09	23,870	0.297 = 0.3
Taxes, Insurance, Administration, and Capital Recovery	0.2	8,170	
Labor	3.09	15,770	0.742 = 0.75
	0.2	1,080	
Pumping Electricity and Make-up Coolant	3.09	2,875	0.455 = 0.46
	0.2	555	
Refrigeration Electricity	3.09	2,310	1.393 = 1.4
	0.2	15	
Recovery Credit	3.09	77,485	1.00 = 1.00
	0.2	2,085	

$$8{,}170 = \text{Minimum maintenance, taxes, etc. costs at 0.2 kg VOC/Mg product, \$}$$

$$(15{,}770 - 1{,}080)\left(\frac{ER - 0.2}{3.09 - 0.2}\right)^{0.75} = \text{Incremental labor costs, \$}$$

$$1{,}080 = \text{Minimum labor costs, \$}$$

$$(2{,}875 - 555)\left(\frac{ER - 0.2}{3.09 - 0.2}\right)^{0.46} = \text{Incremental pumping electricity and make-up coolant costs, \$}$$

$$555 = \text{Minimum pumping electricity and make-up coolant costs, \$}$$

$$(2{,}310 - 15)\left(\frac{ER - 0.2}{3.09 - 0.2}\right)^{1.4} = \text{Incremental refrigeration costs, \$}$$

$$15 = \text{Minimum refrigeration costs, \$}$$

$$(77{,}485 - 2{,}085)\left(\frac{ER - 0.2}{3.09 - 0.2}\right) = \text{Incremental recovery credit, \$}$$

$$2{,}090 = \text{Minimum recovery credit, \$}$$

$$106.21\left(\frac{ER - 0.2}{3.09 - 0.2}\right) = \text{Incremental emission reduction, Mg}$$

$$2.94 = \text{Minimum emission reduction, Mg}$$

$$ER = \text{Uncontrolled emission rate, kg/Mg}$$

Uncontrolled emission rates equivalent to $1,000/Mg and $2,000/Mg were determined by trial and error, substituting different emission rates into the above equation (16) until a cost effectiveness of $1,000/Mg (or $2,000/Mg) was obtained. Table F-8 summarizes the uncontrolled emissions rates for all styrene-in-air emission calculations.

Table F-8. STYRENE-IN-AIR UNCONTROLLED EMISSION RATES EQUIVALENT TO $1,000/Mg, $2,000/Mg, and $3,000/Mg

	Uncontrolled Emission Rates, kg/Mg		
	$1,000/Mg	$2,000/Mg	$3,000/Mg
Within Line	0.4454	0.2903	0.1921
Across Line	0.1983	0.1694	0.1561

TECHNICAL REPORT DATA
(Please read Instructions on the reverse before completing)

1. REPORT NO. EPA-450/3-83-008	2.	3. RECIPIENT'S ACCESSION NO.
4. TITLE AND SUBTITLE Control of Volatile Organic Compound Emissions from Manufacture of High-Density Polyethylene, Polypropylene and Polystyrene Resins		5. REPORT DATE November, 1983
		6. PERFORMING ORGANIZATION CODE
7. AUTHOR(S)		8. PERFORMING ORGANIZATION REPORT NO.
9. PERFORMING ORGANIZATION NAME AND ADDRESS Pacific Environmental Services, Inc. 1905 Chapel Hill Road Durham, NC 27707		10. PROGRAM ELEMENT NO.
		11. CONTRACT/GRANT NO. 68-02-3511
12. SPONSORING AGENCY NAME AND ADDRESS U. S. Environmental Protection Agency Office of Air Quality Planning and Standards Research Triangle Park, North Carolina 27711		13. TYPE OF REPORT AND PERIOD COVERED Final
		14. SPONSORING AGENCY CODE

15. SUPPLEMENTARY NOTES

16. ABSTRACT

Control techniques guidelines (CTG) are issued for the control of volatile organic compounds (VOC) from certain polymer manufacturing plants to inform Regional, State, and local air pollution control agencies of reasonably available control technology (RACT) for development of regulations necessary to attain the national ambient air quality standards for ozone. This document contains information on VOC emissions and the costs and environmental impacts of RACT in polypropylene liquid-phase process plants, high-density polyethylene slurry process plants and polystyrene continuous process plants.

17. KEY WORDS AND DOCUMENT ANALYSIS

a. DESCRIPTORS	b. IDENTIFIERS/OPEN ENDED TERMS	c. COSATI Field/Group
Air Pollution Volatile Organic Compounds Polymers Resins Polyethylene Polypropylene Polystyrene	Air Pollution Control	

18. DISTRIBUTION STATEMENT	19. SECURITY CLASS *(This Report)* Unclassified	21. NO. OF PAGES 302
Unlimited	20. SECURITY CLASS *(This page)* Unclassified	22. PRICE

EPA Form 2220-1 (Rev. 4-77) PREVIOUS EDITION IS OBSOLETE