United States
Environmental Protection
Agency

Office of Air Quality
Planning and Standards
Research Triangle Park NC 27711

EPA-450/3-83-012
May 1983

Air

EPA

Control Techniques for Organic Emissions from Plywood Veneer Dryers

CTD

UNITED STATES ENVIRONMENTAL PROTECTION AGENCY
Research Triangle Park, North Carolina 27711

AUG 22 1983

Bob - Chapman Lavagnino

Dear Sir or Madam:

Enclosed for your information is a document entitled "Control Techniques for Organic Emissions from Plywood Veneer Dryers." This report summarizes information gathered by the U. S. Environmental Protection Agency on the control of emissions from softwood plywood manufacturing.

This control technique document (CTD), unlike a control techniques guideline (CTG), does not define reasonable available control technology (RACT). Its discussion of control technology, however, may be used by a State as background material for developing its own emission regulations.

Enclosed, also, is a list of persons who have been sent the report at this time.

Sincerely yours,

Jack R. Farmer
Director
Emission Standards and
Engineering Division

2 Enclosures

Called 8-604-2777 for 4 copies [illegible]
on 11/29/83

EPA-450/3-83-012

Control Techniques for Organic Emissions from Plywood Veneer Dryers

Emission Standards and Engineering Division

U.S. ENVIRONMENTAL PROTECTION AGENCY
Office of Air, Noise, and Radiation
Office of Air Quality Planning and Standards
Research Triangle Park, North Carolina

October 1982

This report has been reviewed by the Emission Standards and Engineering Division of the Office of Air Quality Planning and Standards, EPA, and approved for publication, Mention of trade names or commercial products is not intended to constitute endorsement or recommendation for use. Copies of this report are available through the Library Services Office (MD-35), U.S. Environmental Protection Agency, Research Triangle Park, N.C. 27711, or from National Technical Information Services, 5285 Port Royal Road, Springfield, Virginia 22161.

TABLE OF CONTENTS

Chapter		Page
1	Introduction	1-1
2	Sources and Types of Emissions	2-1
	2.1 Product Characterization	2-1
	2.2 Industry Profile	2-1
	2.2.1 Markets	2-4
	2.3 Trends	2-6
	2.4 Processes and Their Emissions	2-9
	2.4.1 Green Processes	2-10
	2.4.2 Veneer Drying	2-12
	2.4.3 Veneer Preparation, Layup, and Gluing	2-20
	2.4.4 Plywood Finishing	2-20
	2.4.5 Technological Changes	2-21
	2.5 References	2-21
3	Emission Control Techniques	3-1
	3.1 Introduction	3-1
	3.2 Veneer Dryer Emission Control	3-1
	3.2.1 Wet Scrubbing	3-1
	3.2.1.1 Multiple Spray Chambers	3-2
	3.2.1.2 Combination Packed Tower and Cyclonic Collectors	3-2
	3.2.1.3 Sand Filter Scrubbers	3-4
	3.2.1.4 Ionizing Wet Scrubbers	3-4
	3.2.2 Incineration	3-6
	3.2.2.1 Boiler Incineration	3-6
	3.2.2.2 Incineration in a Fuel Cell	3-8
	3.2.2.3 Catalytic Incineration	3-12
	3.2.3 Low-Temperature Drying	3-12
	3.2.4 Control of Fugitive Dryer Emissions	3-12
	3.3 Panel Sander Emission Control Techniques	3-13
	3.3.1 High-Efficiency Cyclones	3-14
	3.3.2 Fabric Filters	3-14
	3.4 Conclusions	3-16
	3.5 References	3-16

TABLE OF CONTENTS (continued)

Chapter		Page
4	Cost of Emissions Control	4-1
	4.1 Introduction	4-1
	4.2 Model Plants	4-1
	4.3 Costs	4-13
	4.4 References	4-24
5	Environmental Impact	5-1
	5.1 Air Pollution Impact	5-1
	5.2 Water Pollution Impact	5-3
	5.3 Solid Waste	5-3
	5.4 Energy Impact	5-4
	5.5 References	5-6
6	Test Methods and Test Results	6-1
	6.1 Veneer Dryer Test Methods	6-1
	6.1.1 Oregon Department of Environmental Quality (ODEQ) Method 7	6-1
	6.1.2 Washington State University (WSU) Method	6-3
	6.1.3 EPA Method 25	6-6
	6.1.4 Combination EPA Method 5X and EPA Method 25	6-8
	6.2 Plywood Sander Test Method	6-8
	6.3 Results of Emission Testing	6-11
	6.3.1 Veneer Dryers	6-11
	6.3.1.1 Uncontrolled Emissions	6-11
	6.3.1.2 Emission Tests of Control Devices	6-16
	6.3.2 State Regulations Applicable to Plywood Plants	6-25
	6.3.2.1 Veneer Dryer Control Evaluation	6-25
	6.3.3 Plywood Sanders	6-25
	6.4 References	6-29

LIST OF TABLES

Number		Page
2-1	Plywood Production by State and Region, 1980	2-2
2-2	Employment Statistics--Softwood Veneer and Plywood	2-5
4-1	Parameters for Model Plant 1	4-4
4-2	Parameters for Model Plant 2	4-5
4-3	Parameters for Model Plant 3	4-6
4-4	Parameters for Model Plant 4	4-7
4-5	Parameters for Model Plant 5	4-8
4-6	Parameters for Model Plant 6	4-9
4-7	Summary of Model Plant Parameters	4-10
4-8	Capital Costs of Control Options for Model Plants With Steam-Heated Dryers	4-14
4-9	Capital Costs of Control Options for Model Plants With Direct-Fired Dryers	4-15
4-10	Annual Operating Costs of Control Options for Model Plants With Steam-Heated Dryers	4-17
4-11	Annual Operating Costs of Control Options for Model Plants with Direct-Fired Dryers	4-18
4-12	Annualized Costs of Control Options for Plants With Steam-Heated Dryers	4-19
4-13	Annualized Costs of Control Options for Plants With Direct-Fired Dryers	4-20
4-14	Capital Costs of Complete Plywood Plants	4-22
4-15	Annualized Direct Costs of Complete Plywood Plants	4-23
5-1	Estimated Air Pollution Impacts of Control Options for Model Plants	5-2
5-2	Estimates of Electrical Energy Consumption of Model Plants	5-5

LIST OF TABLES (continued)

Number		Page
6-1	Emission Tests of Uncontrolled Veneer Dryers Drying Douglas Firs.	6-12
6-2	Distribution Between Terpene Emissions and Other Emissions	6-14
6-3	Total Organic Emissions Tests of Uncontrolled Veneer Dryers	6-15
6-4	Emission Data for Wet Scrubbers on Veneer Dryers	6-17
6-5	Emission Data for Sandair Filter Systems on Veneer Dryers	6-18
6-6a	Results of EPA Tests of a Boiler Incineration System--Particulate and Condensible Organic Emissions	6-19
6-6b	Results of EPA Tests of a Boiler Incineration System--Particulate and Condensible Organic Emissions	6-20
6-7a	Results of EPA Tests of a Boiler Incineration System--Total Organic Emissions (Method 25) at Veneer Dryer Exhaust	6-21
6-7b	Results of EPA Tests of a Boiler Incineration System--Total Organic Emissions (Method 25) at Veneer Dryer Exhaust	6-22
6-8a	Results of EPA Tests of a Boiler Incineration System--Total Organic Emissions (Method 25) at Boiler Exhaust	6-23
6-8b	Results of EPA Tests of a Boiler Incineration System--Total Organic Emissions (Method 25) at Boiler Exhaust	6-24
6-9	Tests Showing Emission Reductions Achieved by Lowering Dryer Temperatures	6-26
6-10	Summary of State of Oregon Regulations for Plywood Manufacturing	6-27
6-11	Emissions From Plywood Sanders with Product Recovery Cyclones	6-28

LIST OF FIGURES

Number		Page
2-1	Softwood plywood production by region, 1960-1980	2-8
2-2	Process flow diagram for veneer and plywood production	2-11
2-3	Two-zone longitudinal-flow dryer	2-13
2-4	Wet end of a steam-heated longitudinal-flow dryer	2-15
2-5	Three-zone, twelve-section jet dryer	2-16
2-6	Cross section of a steam-heated jet dryer	2-17
3-1	Georgia-Pacific emission eliminator	3-3
3-2	Rader SandAir filter	3-5
3-3	Wood-fired dryer system with partial incineration in a fuel cell	3-9
3-4	Wood-fired system with complete incineration of dryer exhaust in a fuel cell	3-11
3-5	Fabric filter system for control of sanderdust emissions	3-15
6-1	Oregon Department of Environmental Quality Method 7 sampling train	6-2
6-2	Washington State University (1972) sampling train	6-4
6-3	Modified EPA Method 25 sampling train	6-7
6-4	Simplified schematic of nonmethane organic analyzer (Method 25)	6-9
6-5	Modified EPA Method 5X/25 sampling train	6-10

1.0 INTRODUCTION

This document summarizes information gathered by the U.S. Environmental Protection Agency (EPA) on the control of emissions from softwood plywood manufacturing. The primary sources of emissions from this industry are veneer dryers and panel sanders. Veneer dryers emit condensible and noncondensible organic compounds and minor quantities of particulate matter. The rate of uncontrolled condensible and noncondensible organic compound emissions from a veneer dryer is a function of test method, wood characteristics (species, moisture content, etc.), and dryer operating conditions (temperature, speed, etc.). As an example of the magnitude of total organic emissions from a plywood plant, National Council of the Paper Industry for Air and Stream Improvement, Inc., (NCASI) staff measurements of total organic emissions from uncontrolled Southern pine veneer dryers showed average Method 25 emissions rates of 13.7 g/m^2 as C_1, 9.5-mm basis (2.8 lb/1,000 ft^2, 0.375-in. basis) on fresh cut veneer. For a representative new Southern plywood plant with three dryers producing 17.2×10^6 m^2/yr, 9.5-mm basis (185×10^6 ft^2/yr, 0.375-in. basis) of plywood, total organic emissions would be 235 Mg/yr (259 ton/yr). Panel sanders produce particulate emissions at a rate depending on the final product. Approximately 18 to 20 percent of all softwood plywood production is sanded.

The industry is largely located in the Northwest and South. Veneer dryer emissions are controlled in some Northwestern States, notably Oregon, by a variety of wet scrubbing and incineration schemes. In the South, where industry growth is expected to concentrate, all but a few dryers are uncontrolled. Panel sanders are controlled by fabric filtration in most States, although high-efficiency cyclones may meet emissions standards in some Southern States.

The remainder of this report details the sources and types of emissions from the plywood industry, the types and costs of emissions control techniques, environmental impacts associated with these control techniques, and available emissions test data.

2. SOURCES AND TYPES OF EMISSIONS

2.1 PRODUCT CHARACTERIZATION

Plywood is a product composed of layers of wood veneer glued together with an adhesive, usually a synthetic resin. The grain of each successive layer is placed at right angles to give the product strength in two directions. A veneer, or ply, is a thin sheet of wood, peeled or sliced from a log. Softwood plywood is constructed using veneers, including the face ply, from coniferous or needlebearing trees. Wood species used in softwood plywood manufacture include Douglas fir, White fir, hemlock, Ponderosa pine, Southern pine, and redwood. Hardwood veneer drying and sanding are not considered in this document because emissions from these processes are insignificant compared to emissions from softwood processes.

Softwood plywood is used for roof decks, exterior sheathing, plywood siding, all-weather wood foundations, and rough flooring in housing construction. It is also used in light industrial roofs, heavy tongue-and-groove commercial floor systems, and furniture.[1] There are about 50 to 60 different grades of softwood plywood, and many mills produce more than one type of plywood.[2]

2.2 INDUSTRY PROFILE

The majority of plants in the softwood plywood industry are located in the Pacific Northwest (Oregon, Washington, and California), with the second-largest concentration in the Southeast. In 1980, softwood plywood production totalled 1.53 billion m^2, 9.5-mm basis (16.5 billion ft^2, 3/8-in. basis).[3] Of this total, 0.28 billion m^2, 9.5-mm basis (3.0 billion ft^2, 3/8-in. basis), constituted sanded plywood production. This plywood production rate is a 16-percent decrease from the 1.85-billion m^2, 9.5-mm basis (20.0-billion ft^2, 3/8-in. basis), production rate of 1978. Table 2-1 shows the number of producing units in each State together with production by State and region.

TABLE 2-1. PLYWOOD PRODUCTION BY STATE AND REGION, 1980[4]
(billion m^2, 9.5-mm basis)

Region and State	Units	Industry production ($m^2 \times 10^9$/yr)	Percent of U.S. total
Northwest			48.0
Oregon	72	0.574	37.9
Washington	23	0.123	8.1
California	6	0.029	1.9
Southeast			45.3
Louisiana	14	0.115	7.6
Texas	10	0.139	9.2
Alabama	9	0.085	5.6
Mississipi	6	0.086	5.7
Arkansas	7	0.073	4.8
Georgia	6	0.069	4.6
North Carolina	5	0.050	3.3
South Carolina	4	0.034	2.2
Florida	1	0.011	0.7
Virginia	1	0.009	0.6
Oklahoma	1	0.009	0.6
Maryland	1	0.005	0.3
Inland			6.7
Montana	4	0.053	3.5
Idaho	5	0.048	3.2
TOTAL		1.515	~100.0

In January 1980, an estimated 267 facilities were manufacturing softwood plywood and veneer in the continental United States. Of this number, 65 plants produced only veneer, while 202 plants produced either plywood alone or both plywood and veneer. By January 1982, many mills were closed, either temporarily or permanently.

The top five firms accounted for 40.5 percent of production in 1972 and for 47.5 percent of production in 1979.[3] The top 20 firms accounted for approximately 70.9 and 75.2 percent of production in 1972 and 1979, respectively.[3] Therefore, industry leaders gained market share largely at the expense of small firms.

Most recent growth in new plants has occurred in the South. Also, the apparent industry trend has been toward greater capacity among new plants. Consequently, Southern plants are generally newer and have larger capacities than do Northwestern plants. In 1979, an average Northwestern plant produced 8.36 million m^2, 9.5-mm basis (90 million ft^2, 3/8-in. basis), of softwood plywood. The average Southeastern plant produced 11.9 million m^2, 9.5-mm basis (128 million ft^2, 3/8-in. basis), of softwood plywood in 1979.

Data are not available on the ages of individual plants. Most Northwestern plants are 30 years old, whereas most Southeastern plants are less than 15 years old. Plants close periodically and are frequently rebuilt because of change of wood supply or change of ownership. Production at single sites may continue for decades (e.g., the McCleary Washington plant was built in 1912)[6] or may be terminated after a few months.

Many companies in the softwood plywood industry are vertically integrated. Weyerhaeuser, Crown Zellerbach, Union Camp, Georgia-Pacific, Southwest Forest Industries, and International Paper all own timber stands that supply logs for plywood manufacture.[7] These companies have an advantage over firms that must purchase timber on the open market because stumpage costs have jumped almost 75 percent since 1978, to nearly $400 per 1,000 board feet.[8] St. Regis, Champion, Potlatch, Boise Cascade, Louisiana-Pacific, and Willamette supply over half their raw material needs from their own timberlands.[9]

In 1979, the softwood plywood industry employed approximately 46,100 workers. States leading employment are Oregon, Washington, Texas, and Louisiana, accounting for 67 percent of total industry employment in 1977.[10]

Employment statistics for the years 1972 through 1977 are given in Table 2-2. The table shows total establishments and employees, wages, hours, and production workers. It lists figures for value added by manufacture, materials cost, and shipment.

2.2.1 Markets

A number of factors affect the U.S. plywood market. It appears that over the next few years, oriented strand boards and waferboard will be used increasingly as plywood substitutes.[4] In fact, it is estimated that nonveneer panel production may be up to 0.232 billion m^2, 9.5-mm basis (2.5 billion ft^2, 3/8-in. basis), in the coming years.[4]

International activities moderately impact U.S. production. The United States imports softwood plywood mainly from Canada and Mexico, though not to any significant extent. Softwood sales overseas account for some 5 percent of U.S. production. Because U.S. companies have gained agreements in the growing international markets and because potential competitors (Scandinavia and U.S.S.R.) do not have sufficient wood or plant capacity, U.S. production should expand in the future to serve the export market.[4]

The pricing of softwood plywood products depicts a classic case of price elasticity of demand: many market variables affect the price of softwood products, making them price sensitive. Even a small price decrease can increase product demand, which in turn fosters an increasingly competitive industry.

Demand determinants for the softwood plywood market comprise a variety of factors, the primary factor being the number of forecasted housing starts. During the forecast period, veneer panel use is estimated at 520 m^2 per single-family unit and 300 m^2 per multifamily unit. These estimates reflect the expectation that new uses like wood foundations and structural panel floors will replace concrete walls and slab floors. These new uses will offset lost plywood use resulting from the

TABLE 2-2. EMPLOYMENT STATISTICS--SOFTWOOD VENEER AND PLYWOOD[9 10]

Year[b]	Companies[c] (No.)	All establishments: Total (No.)	All establishments: With 20 employees or more (No.)	All employees: Number (1,000's)	All employees: Payroll ($ millions)	Production workers: Number (1,000's)	Production workers: Hours (millions)	Production workers: Wages ($ millions)	Value added by manufacture ($ millions)	Cost of materials ($ millions)	Value of shipments ($ millions)
1972 Census	121	232	225	43.7	403.6	39.9	85.3	356.5	935.4	1,071.3	2,011.5
1973 ASM	(NA)	(NA)	(NA)	45.5	442.2	41.3	87.7	388.7	1,097.2	1,283.5	2,365.1
1974 ASM	(NA)	(NA)	(NA)	42.8	421.1	38.5	78.1	363.3	832.0	1,299.8	2,123.8
1975 ASM	(NA)	(NA)	(NA)	41.1	438.6	36.7	75.0	377.5	850.3	1,386.5	2,243.5
1976 ASM	(NA)	(NA)	(NA)	45.0	537.8	40.5	84.5	468.0	1,304.2	1,880.5	3,164.1
1977 Census	129	256	224	46.2	634.6	41.9	89.0	556.9	1,583.7	2,231.1	3,804.8

[a]Industry was defined or redefined for 1972 Census of Manufacturers, so data are available only for years shown.

[b]In annual survey of manufacturers (ASM) years, data are estimates based on a representative sample of establishments canvassed annually and may differ from a canvass of all establishments.

[c]For the census, a company is defined as a business organization consisting of one establishment or more under common ownership or control.

trend toward constructing smaller units with more common walls. Mobile homes add to the residential volume. Structural panel use is expected to grow in this market as the trend toward more double-wide units continues. Use per unit is expected to increase from 38 m^2 to 80 m^2 on the average.[4]

The second-largest market for structural panels is the homeowner market, about two-thirds of which is for structural additions, alterations, and property improvements. This category includes garages, storage sheds, privacy screening, patios, and planters. The remainder of the homeowner market includes such miscellaneous uses as furniture, shelving, toys, games, pet shelters, temporary closures, paneling, and a host of other applications. The homeowner market is expected to continue to increase at a 2- to 3-percent rate each year, reflecting population growth, continued, strong upgrading of houses, and additional activity.

Diverse industrial uses constitute the third-largest structural panel market. The two largest use areas are materials handling (pallets, bins, crates, and industrial shelving) and transportation (truck bodies, bus floors, rail car liners, and recreational vehicles). All-veneer structural panels dominate the industrial markets and are expected to continue to do so, especially in materials handling and transportation equipment areas.

Nonresidential consumption constitutes the fourth-largest structural panel market. Plywood used in building construction and in concrete forming accounts for 90 percent of the nonresidential market. Auxiliary applications include signs, barricades, workhorses, bench shoring, retaining walls, and highway sound barriers. Applications such as sound barriers and retaining walls have potential for substantial growth. Overall, nonresidential uses are forecast to expand gradually at 1 to 2 percent per year.[4]

2.3 TRENDS

The softwood plywood industry has shown a highly variable but consistently increasing production pattern over the past three decades. Some product lines recently have expanded while others have nearly disappeared because of competition from substitutes or changing consumer tastes.

Production trends over the last 20 years are shown in Figure 2-1, which shows softwood plywood production by region.[4] Note that Southern production increased from zero to 45.3 percent of the national total during that time. Until 1981, Southern production had increased every year except for 1974. Western and inland production generally has fluctuated around a base level, increasing less consistently than Southern production has.

While softwood plywood production has increased gradually over the past decade, it has not matched the 11-percent annual rate established from 1945 to 1968. During the past decade, the industry has expanded production by adding or replacing veneer dryers in existing plants and by building new greenfield plants. Because drying capacity is a limiting factor in many plants, additional drying capacity has automatically increased total production capacity. Most of the new plants have been constructed in the Southeast.

The rapidly increasing timber and plywood production in the Southeast and South should continue to increase well into the 1980's. Timber supply has been a primary factor in development of the Southern pine plywood industry. Because they have been assured timber availability from private holders of timberland, many firms have expanded capacity by building mills in the South rather than by increasing capacity in a region controlled by public timber management.

In 1980 and 1981, producers cut prices to move wood, a strategy that proved only marginally successful. The underlying problem is a depressed housing market, which in 1981 closed many Western mills, some permanently.

Many plants are now operating in the red. Some are able to continue operating only with parent company subsidies through the current recession. This subsidization is partly due to the fact that some companies need wood chips from their plywood mills as raw materials for their paper mills.

Energy and mineral resource shortages could be considered a potential boon to the plywood industry. Plywood comes from a renewable resource and can be manufactured with far less energy than can most other building materials.

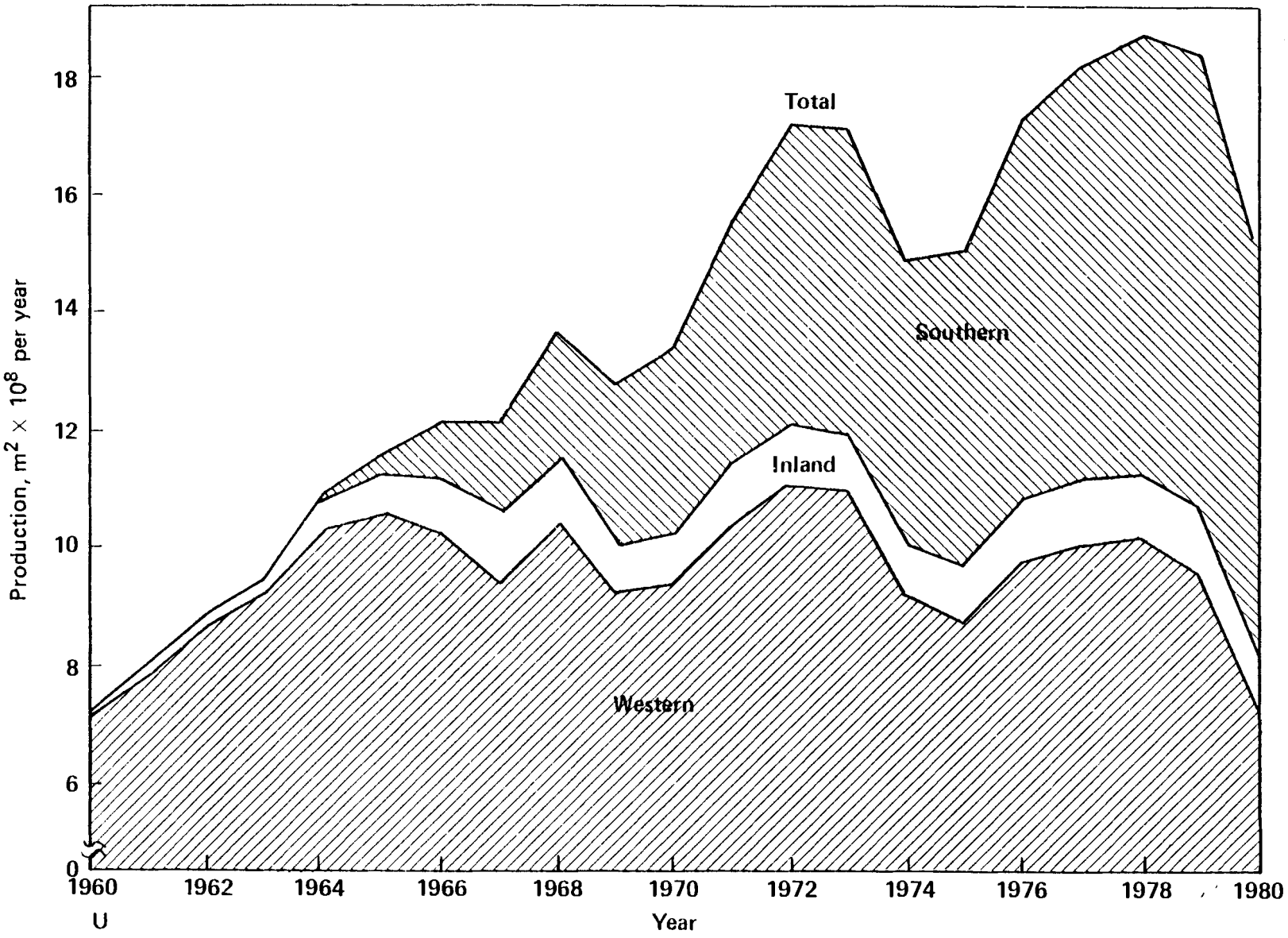

Figure 2-1. Softwood plywood production by region, 1960-1980.

The plywood industry traditionally has used short-term market conditions and production costs as principal factors in deciding to build new plants or to close existing ones. As a net effect, rapid plant turnovers have had a major impact on the number of new plants. Also, most plants close periodically because of wood supply, product line, or owner changes.

However, the size of individual plants has increased over the past few years, especially for new, integrated softwood plywood plants. Incorporation of plywood or veneer facilities into total wood production complexes (which is occurring in large forest industry corporations) will be reflected in increased stability and continued upgrading of individual plants. It is estimated that existing veneer dryers undergo major reconstruction or modification every 15 years.[11] There are presently no known plans for new plywood plants, though once recovery from the housing slump commences, this situation might change.

Existing softwood plywood capacity at 2.27 billion m^2, 9.5-mm basis (24.4 billion ft^2, 3/8-in. basis), is sufficient to meet increased softwood plywood demand through 1986, which is predicted to be 1.89 million m^2, 9.5-mm basis (20.3 billion ft^2, 3/8-in. basis).[5] However, past trends indicate that new plants will be built to replace plants that close or to seek a larger market share by offering a more economically produced product. From 1977 to 1979, production in the South increased 12 percent, where it appears most new growth in the plywood industry will occur. Annual plywood production may reach 2.4 billion m^2, 9.5-mm basis (26.5 billion ft^2, 0.35-in. basis), by 1995. The above predictions must be used with caution because of the current economic slump.

2.4 PROCESSES AND THEIR EMISSIONS

Four processes used to produce plywood are listed below:

- Green process--log conditioning, followed by peeling into green veneer;
- Veneer drying;
- Veneer patching and grading, layup and gluing, and pressing to make plywood; and
- Sizing and finishing of the plywood.

Figure 2-2 is a generalized flow chart for these processes.

2.4.1 Green Processes

Continual low-level emissions of volatile wood components occur throughout the lives of softwood trees. These emissions continue when the live trees are cut and during the veneer drying process; the emission rate increases as temperature and wood surface area increase. Volatile components--primarily terpenes--are estimated at 20 g/m^2, 9.5-mm basis (4 lb/1,000 ft^2, 0.375-in. basis), of product for freshly cut Southern pines.[12] By the time green veneer has been prepared for drying, this component has decreased significantly. Most studies of terpene loss from wood indicate rapid loss from logs or thin sheets of wood within 1 to 8 weeks after cutting.[13 14 15] Georgia-Pacific experience indicates that logs lose approximately 6 percent of total weight in wood moisture during a typical 3-week log storage period.[16]

After delivery to a west coast plywood facility, the logs are stored in a pond or piled on a prepared surface called a cold deck. The latter storage method requires water spraying in warm periods to prevent log deterioration. In the South, logs usually come directly from the woods to an open log yard. Pond storage is almost never used, and water spraying is only used if prolonged storage is anticipated. Next, logs are debarked and cut into specifically sized blocks. The bark is recovered and used for fuel.

The next operation at most plants is log conditioning--treating the logs with heat and moisture--for which hot water vats or spray chambers are used. At some mills, softwoods are peeled cold without such conditioning.

Veneer can be cut from logs by several methods. Essentially, all softwood veneer is cut by peeling or rotary cutting. Other methods are used primarily for decorative cuts for face veneer and for special effects with certain woods. Softwood veneer is cut to thicknesses ranging from 2.5 to 8.0 mm (0.1 to 0.313 in.).

After the veneer is peeled, it is brought as a semicontinuous ribbon through automatic clippers and cut to size before drying. These machines automatically detect and clip out unacceptable sections of

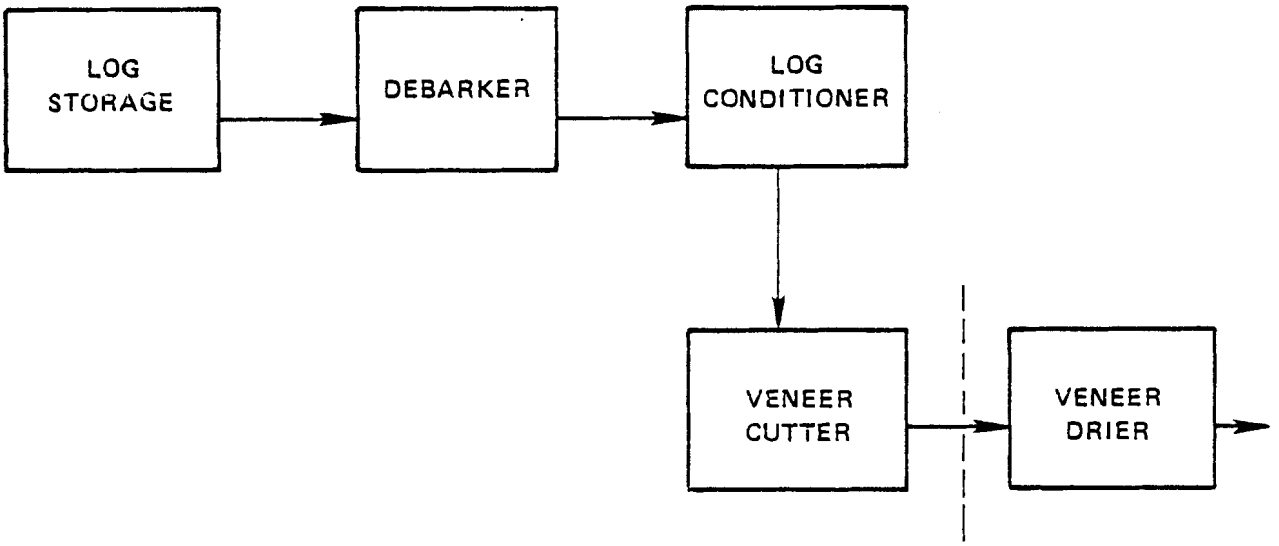

VENEER OPERATION

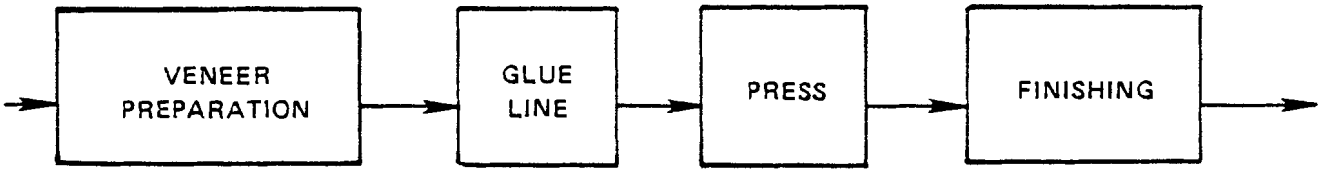

PLYWOOD OPERATION

Figure 2-2. Process flow diagram for veneer and plywood production.

veneer. The green veneer is then sorted according to size, wood species, and veneer grade and whether it is heartwood or sapwood. This sorting is necessary before the veneer can be dried because different types of wood require different drying conditions. Sorting is the last step before drying.

Byproducts of veneer cutting are log cores, wood chips, and veneer scraps suitable only for chipping. Conveyance of coarse material leads to negligible air emissions, while conveyance of fine material can lead to particulate emissions.

2.4.2 Veneer Drying

Freshly cut veneer must be dried before it can be glued and pressed into plywood. A veneer dryer is a heated chamber with layers of rolls (typically four to eight) to carry the veneer. Heat transferred to the wood by hot gases circulating in the dryer causes the veneer to dry to a low moisture content. This final moisture content is typically 2 to 5 percent for Douglas firs and 3 to 8 percent for Southern pines.[17]

Two methods of heating veneer dryers are indirect (steam) and direct heat. With steam heat, the dryer is separate from the boiler, which produces steam to heat the internal coils in contact with dryer air. With direct heat, hot combustion gases provide the energy necessary to dry the veneer. Direct-fired dryers are fueled with either gas or wood. In gas-fired dryers, combustion occurs at a burner inside the dryer, and the heated air is circulated to the veneer with fans. In wood-fired dryers, air is heated outside the dryer by combustion of wood fuel. Combustion gases are mixed with recirculating dryer air in a blend box and transported into the dryer.

Dryers are also characterized by the method used to circulate hot air to the veneer sheets. Longitudinal-flow dryers may have one to three zones; a two-zone longitudinal-flow dryer is shown in Figure 2-3. A zone is the portion of a dryer that has a self-contained air circulation system, as shown in Figure 2-4; air circulates through a longitudinal zone parallel to veneer movement. The air is moved by centrifugal fans located at one end of the zone. In a steam-heated longitudinal dryer, air flows past steam coils in the upper plenum, through a

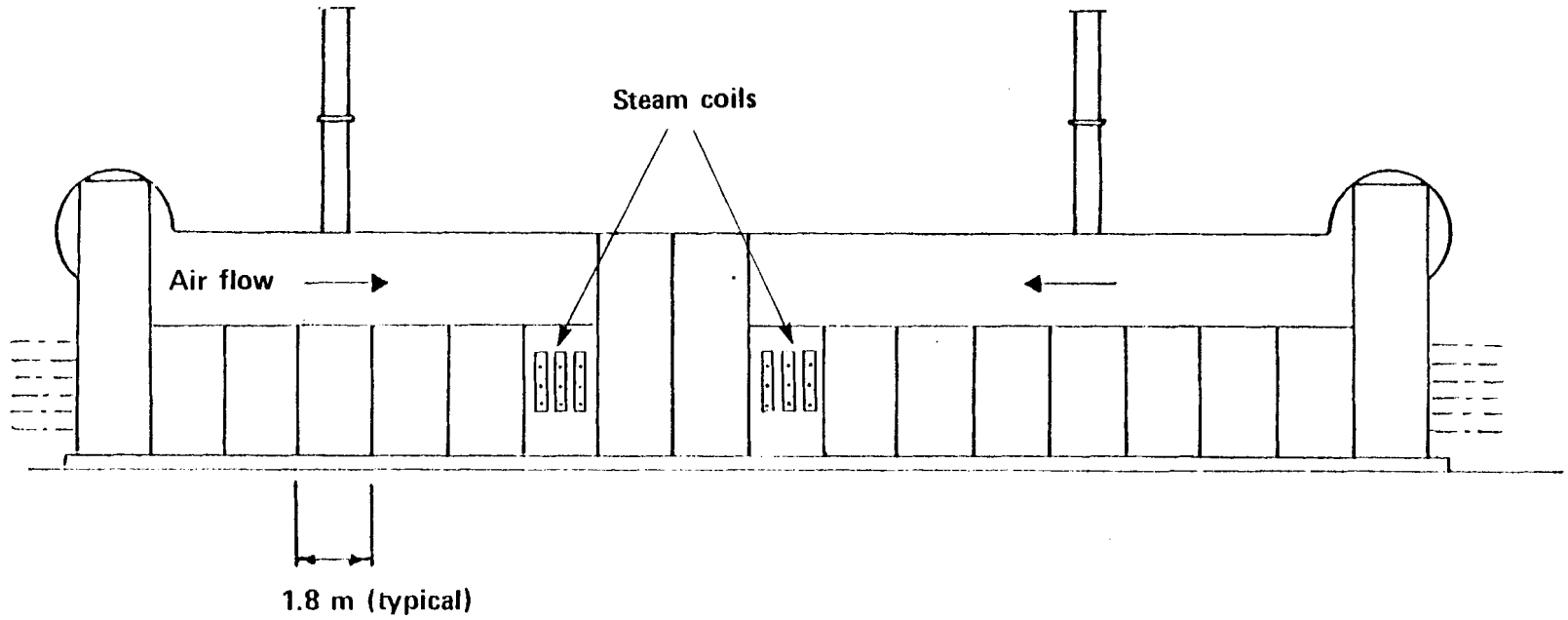

Figure 2-3. Two-zone longitudinal-flow dryer.[18]

delivery manifold at the end of the zone, and down into the various decks containing moving veneer.[18] The air is collected in another manifold at the opposite end of the zone before it reaches the centrifugal fans. Steam coils also are installed among the veneer decks in the drying portion of the dryer. In most direct-heated systems, instead of steam coils, hot gases generated outside the dryer supply the required heat. In the gas-fired dryers currently used, a gas burner located on the upper plenum supplies heat.

Over 90 percent of the new dryers installed in the last 5 years are jet-impingment-type dryers (jet dryers).[19 20] Figure 2-5 shows a three-zone jet dryer, where hot air is directed onto the veneer surface through jets or holes in horizontal plenums. The jets of hot air effectively transfer moisture from the wood by disturbing boundary layers on the veneer surface. These dryers generally have higher green end temperatures and more control zones than do longitudinal dryers. Jet dryers may be direct fired or steam heated. Figure 2-6 shows a cross section of a steam-heated jet dryer. In a jet dryer, one side of the unit is under positive pressure. The condition of door seals on this side of the dryer partially determines the extent of fugitive emissions. All dryers are equipped with baffles at each end to minimize infiltration or leakage while allowing veneer movement.

Emissions from dryer stacks vary according to dryer type. Some of the emissions from gas-fired dryers are unburned methane and other low-molecular-weight hydrocarbons.[21] Because they emit combustion gases, wood-fired dryers may emit more organics than do gas-fired and steam-heated veneer dryers. However, a wood-fired dryer may have fewer overall organic emissions than a steam-heated veneer dryer and the associated wood-fired boiler do because some dryer organics may be destroyed by high temperatures in the blend box or combustion unit. Dryer emissions also vary according to type of wood in the dryer. For example, on the basis of mass emissions per production unit, drying Ponderosa pine veneer may yield over twice the emissions from drying Douglas fir veneer.[21]

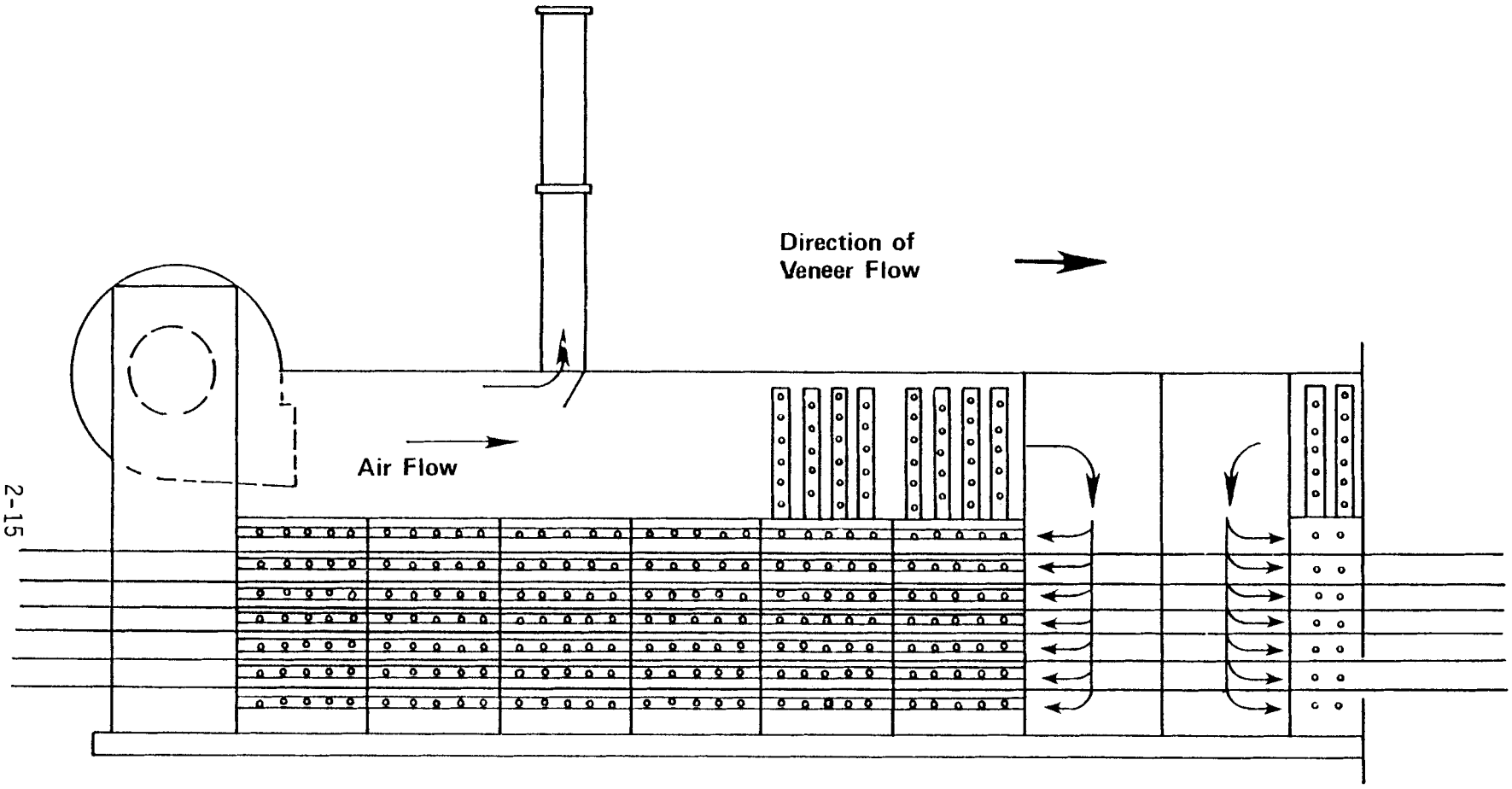

Figure 2-4. Wet end of a steam-heated longitudinal-flow dryer.[20]

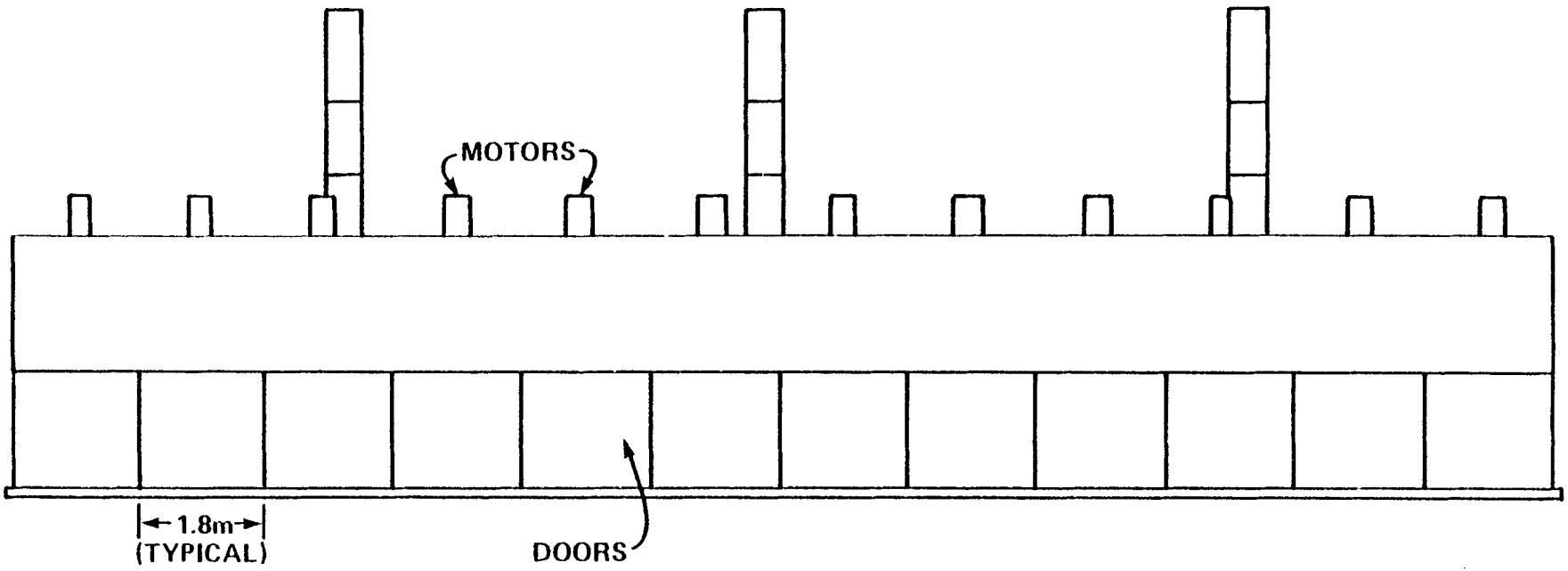

NOTE: No scale

Figure 2-5. Three-zone, twelve-section jet dryer.

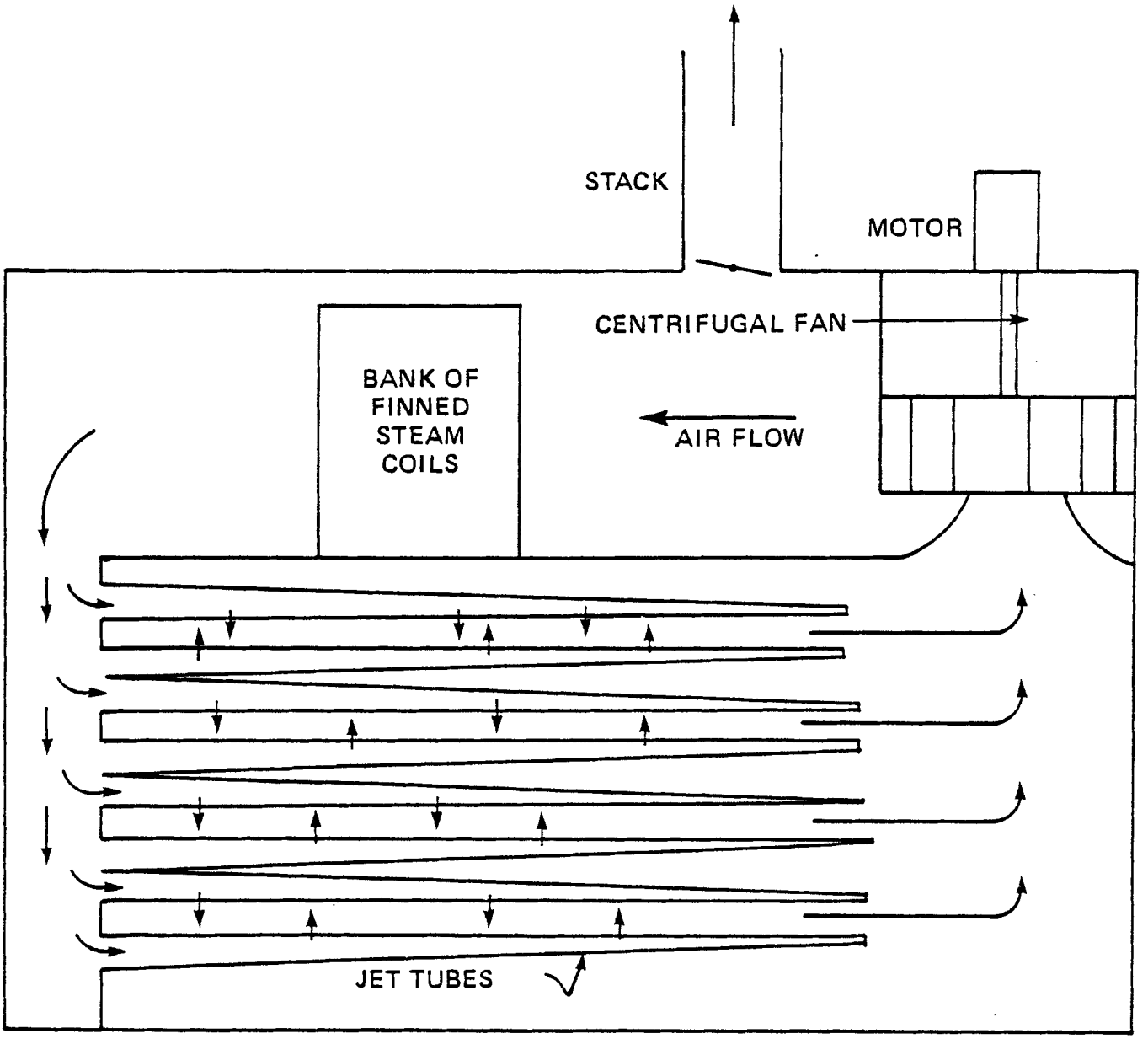

NOTE: No scale

Figure 2-6. Cross section of a steam-heated jet dryer.

Stack damper setting directly influences the amount of organic material vented from a veneer dryer, as well as dryer operating efficiency. In the high wet bulb temperature method,[22 23 24 25] the dampers are set to reduce the volume of air exhausted and to raise the humidity in the dryer. The desired wet bulb temperature is typically about 66° C. Some dryers, particularly jet dryers in the South, are operated with the stack dampers in the closed position (although some air is exhausted through built-in openings in the dampers). Heat loss is reduced and heat transfer to the veneer is increased in dryers operated by the high wet bulb temperature method. Advantages include: (1) more even veneer moisture content, (2) higher production, (3) lower fuel costs, (4) less chance of overdrying, (5) less chance of dryer fires, and (6) lower capital cost of air pollution control equipment.[25] When dryer vents are closed, the static pressure in the dryer is increased, causing higher fugitive emissions out dryer ends and through any leaks in the dryer shell. Therefore, the condition of door and roll seals becomes very important on a dryer operated in the high wet bulb temperature mode. Fugitive emissions are discussed further in Chapter 3.

The primary emissions from veneer dryers are organic aerosols and gaseous organic compounds. A small amount of wood fiber also is emitted. The organic material is a mixture of compounds driven from the wood by steam that forms within the wood when moisture in the veneer is heated. These materials are in gaseous form until cooled to below approximately 150° C, at which time an aerosol begins to form.[26] At ambient air temperatures, a vapor fraction remains, while the remainder of the material is an aerosol. Douglas fir and Loblolly pine veneer both showed high gaseous fractions (greater than 80 percent) in a recent Washington State University study.[26] The vapor fraction at 21° C consists mainly of monoterpenes ($C_{10}H_{16}$) in various combinations, depending on the wood species. The most common monoterpenes are α-pinene, β-pinene, camphene, Δ^3-carene, and limonene. The predominant monoterpene, α-pinene, is the major component of commercial turpentine and occurs in many volatile oils.[26] The aerosol fraction at 21° C probably contains additional monoterpene.[20] However, the bulk of this complex

mixture consists of compounds of higher molecular weights than the monoterpenes. The compound groups identified include resin acids (notably abietic), fatty acids, and neutral sesqui- and di-terpene compounds, all of which have at least 15 carbon atoms.[21 26] Detailed gas chromatograph-mass spectrometer analyses of condensible organic emissions from several wood species are available.[26] The relative abundance of vapor/aerosol fractions in dryer emissions varies according to wood type but also depends on measurement technique.[21 26]

Emissions rate data for veneer dryers are summarized in Chapter 6. At least four different test methods have been used to quantify dryer emissions, and the resulting data are not always comparable because of differences in physical configurations, condenser temperatures, and analytical schemes. Chapter 6 contains a description of test methods that is useful in interpreting the veneer dryer emissions data below. Emissions vary from dryer to dryer. With the same test method (Oregon Method 7), condensible emissions for Douglas fir alone have been measured at from 1.3 to 14 g/m^2, 9.5-mm basis (0.26 to 2.86 lb/1,000 ft^2, 0.375-in. basis) at different steam-heated dryers.

Limited sampling by Washington State University (WSU) indicates that the noncondensible fraction equals or exceeds the condensible fraction of emissions from Douglas firs. The study strongly suggests that noncondensible emissions make up 80 percent of Southern pine emissions.[26] An extensive 1972 study by WSU found Douglas fir condensible emissions to average approximately 4.4 g/m^2, 9.5-mm basis (0.9 lb/1,000 ft^2, 0.375-in. basis). Noncondensible emissions from Douglas firs were reported to be much lower, but calculation errors were later discovered. Corrected, noncondensible Douglas fir emissions from the 1972 study average 2.0 (sapwood) to 4.0 (heartwood) g/m^2, 9.5-mm basis (0.4 to 0.8 lb/1,000 ft^2, 0.375-in. basis).[27] Condensible emissions from Southern pines are estimated from this report to be approximately 4.0 g/m^2, 9.5-mm basis (0.8 lb/1,000 ft^2, 0.375-in. basis). Noncondensible Southern pine emissions averaged approximately 11 g/m^2, 9.5-mm basis (2.3 lb/1,000 ft^2, 0.375-in. basis), after corrections for calculation errors.[27] Thus, the ratio of noncondensible to condensible

emissions calculated from the 1972 WSU study data are in line with those reported in the 1981 WSU report. Exact agreement would not be expected because of differences in test methods (see Chapter 6).

2.4.3 Veneer Preparation, Layup, and Gluing

Plywood consists of sheets of veneer bonded by layers of glue. Dry veneer is inspected, clipped, and spliced as needed. Steps in the layup process are veneer preparation, layup or gluing, and pressing. Knot holes are plugged, and the veneer is regraded as necessary to prepare sheets for layup.

Different plywood products require different glues to bond the veneer sheets. Approximately 98 percent of the softwood plywood produced in this country is made with phenol-formaldehyde resins.

Glue is applied to the plywood, which is moved in loose layers to the pressing area. Many glues must stand for a few minutes before pressing. Pressing requires 2 to 7 minutes, depending on the panel thickness. Phenol-formaldehyde glues are steam pressed at temperatures ranging from 132° to 174° C and at pressures up to 1,030 kPa (150 psi).[29] During pressing and when the presses are released, some gaseous organics may be emitted from unreacted monomers. These fugitive emissions have been considered only in terms of their in-plant effects. Their presence requires adequate venting to protect worker health and to eliminate odors.

2.4.4 Plywood Finishing

The last step in plywood preparation is trimming and finishing. The plywood is trimmed by stationary circular saws, which remove up to 25 mm (1 in.) on each side to produce even-edged sheets. Then the plywood sheets may be sanded on one or both faces, depending on the final product. Only 18 to 20 percent of all plywood is sanded. During sanding, the sheets move on a conveyor through enclosed automatic sanders, which are cleared continuously of sanderdust by pneumatic collectors located above and below the plywood.

Mills may produce one or several grades or classifications of plywood; the amount of plywood sanded varies from none at some plants to the entire production at others. The depth of cut, or amount of material

sanded from each plywood face, varies widely with product. Dust from sanding and trimming operations is transferred by pneumatic systems to cyclone collectors, in addition to which many plants have installed baghouses. Sanderdust and sawdust are valuable byproducts and are used as fuel for boilers or direct-fired combustion units.

2.4.5 Technological Changes

Although Douglas firs traditionally have been used in softwood plywood manufacture, technological innovations have allowed the use of other softwoods: hemlocks, spruces, White firs, red cedars, and Southern pines. Trees of these species are smaller in diameter than is the coastal Douglas fir. A lathe was developed to accommodate logs with diameters as small as 20.3 to 25.4 cm (8 to 10 in.).[30]

In 1964, the jet veneer dryer replaced the roller dryer as most effective. The new jet dryers enabled output volume to double, while the number of employees necessary remained constant or decreased.[30]

Other technological changes that increase productivity include automatic clipping of veneer sheets, panel knot hole patching with hot plastic, and automatic high-speed hot press loading, curing, and unloading.[31]

2.5 REFERENCES

1. Industry and Trade Administration, U.S. Department of Commerce. U.S. Industrial Outlook 1979. January 1979. p. 40.

2. 1980 Directory of the Forest Products Industry. San Francisco, Miller Freeman Publications, 1980.

3. Letter from Emery, J. A., American Plywood Association, to McCarthy, J. M., Research Triangle Institute. January 13, 1982. Comments on draft Control Techniques Document.

4. Anderson, R. Regional Production and Distribution Patterns of the Softwood Plywood Industry. American Plywood Association. Economic Report E 31. Tacoma, Washington. June 1981.

5. U.S. Environmental Protection Agency. Economic Analysis of Proposed Effluent Guidelines. The Timber Processing Industry (Hardboard, Wood Preserving, Plywood and Veneer). EPA-230/ 1-73-029. August 1973. p. 70.

6. Bellas, Carl. Industrial Democracy and the Worker Owned Firm. New York, Praeger Publishers. 1972. p. 105.

7. Value Line Investment Surveys. Arnold Bernhard & Company, New York, August 8, 1980. p. 937, 940, 943, 953, 954, 956.

8. Reference 8, p. 931.

9. Reference 8, p. 932, 934, 945, 951, 957.

10. Bureau of the Census, U.S. Department of Commerce. 1977 Census of Manufacturers--Industry Series. MC 77-1-24B. June 1980. p. 24B-11.

11. Telecon. Erb, K., American Plywood Association, with Chessin, Robert L., Research Triangle Institute. July 29, 1981. Reconstruction of existing veneer dryers.

12. Franklin, E. C. Phenotypic and Genetic Variation of Sulfate Navel Stores Yields in Loblolly Pine. (Presented at TAPPI Forest Biology Conference. San Francisco. April 1974.) p. 99.

13. Springer, E. L. Losses During Storage of Southern Pine Chips. TAPPI. 59:126. April 1976.

14. Hajng, G. J. Outside Storage of Pulpwood Chips. TAPPI. 49:97A. October 1966.

15. Cowling, E. G., et al. Changes in Value and Utility of Pulpwood During Harvesting, Transport, and Storage. TAPPI. 57:120. December 1974.

16. Letter from Mortensen, D. K., Georgia-Pacific Corporation, to McCarthy, J. M., Research Triangle Institute, January 31, 1983. Comments on draft Control Techniques Document.

17. Letter from Emery, J. A., American Plywood Association, to McCarthy, J. M., Research Triangle Institute. December 1981. Comments on draft BID chapters.

18. Vranizan, J. M. Veneer Dryers--Typical Construction, Operations, and Effluent Abatement Possibilities. (Presented at Air Pollution Control Association. Eugene. November 17, 1972.)

19. Telecon. Chessin, R., Research Triangle Institute, with Oehling, N., Coe Manufacturing Company. October 8, 1980. Information about veneer dryers.

20. Browning, B. L., ed. The Chemistry of Wood. New York, Interscience Publishers, 1963. p. 318.

21. Monroe, F. L., et al. Investigation of Emissions from Plywood Veneer Dryers, Revised Final Report. Washington State University. Pullman, Washington. February 1972.

22. Corder, S. E. Energy Use in an Industrial Veneer Dryer. Plywood Research Foundation. Tacoma, Washington. September 1975.

23. Corder, S. E. Ventilating Veneer Dryers. Forest Products Journal. 13:449-453. October 1963.

24. Erb, Carl. Dryers and Veneer Drying. American Plywood Association. Tacoma, Washington. DFPA Technical Report No. 112, Part I. December 1975. 13 p.

25. Laity, W. W., G. H. Atherton, and J. R. Welty. Comparisons of Air and Steam as Veneer Drying Media. Forest Products Journal. 24:21-29. June 1974.

26. Cronn, D. R., et al. Study of the Proposed and Chemical Properties of Atmospheric Aerosols Attributable to Plywood Veneer Dryer Emissions--Final Report to American Plywood Association. Washington State University. Pullman, Washington. June 1981.

27. Telecon. McCarthy, J. M., Research Triangle Institute, with Dallons, V., NCASI. March 24, 1983.

28. Letter from Blosser, R. O., National Council of the Paper Industry for Air and Stream Improvement, Inc., to Farmer, J., U.S. Environmental Protection Agency. January 19, 1983. Comments on draft Control Techniques Document.

29. Lambuth. A. L. Adhesives in the Plywood Industry. Adhesive Age. 38:21-26. April 1977.

30. Farris, M. R. The Veneer and Plywood Industry: Above Average Productivity Gains, Monthly Labor Review. Bureau of Labor Statistics, U.S. Department of Labor. September 1978. p. 28.

31. Industry and Trade Administration, U.S. Department of Commerce, U.S. Industrial Outlook 1974. January 1974. p. 54.

3. EMISSION CONTROL TECHNIQUES

3.1 INTRODUCTION

Controlling emissions from plywood veneer dryers begins with maintaining door seals, dryer skins, tops, and baffles; proper balancing of air flows; and use of end-sealing sections to minimize fugitive emissions.[1] Stack emissions from plywood veneer dryers and panel sanders can best be controlled by add-on equipment. The strategy for reducing veneer dryer emissions has centered on removal of the organic aerosol component to reduce plume opacity. Wet scrubbing and incineration are the most common control techniques for veneer dryers. Fabric filtration represents current technology for control of sanderdust emissions; but sufficient blowout panels, halon deluge systems, spark detectors, and abort gates must be added to mitigate the fire hazard.[1]

3.2 VENEER DRYER EMISSION CONTROL

3.2.1 Wet Scrubbing

The most common technology for veneer dryers is wet scrubbing, for which several types of equipment are available. In each case, a water spray is introduced into the dryer exhaust stream, resulting in cooling and condensing of organic material. Water vapor may condense onto the organic aerosol,[2] and the resulting droplets are large enough to be removed by cyclonic collectors, filters, or mist eliminators. Organic material that remains in the vapor phase escapes collection and reaches the atmosphere. Therefore, wet scrubbing will have a low organic emissions removal efficiency if applied to veneer dryer emissions with high gaseous fractions.

Scrubbers employing a number of different collection mechanisms have been used to control veneer dryer emissions. Representative

examples of these collector types are described in the following subsections. These systems have only been used at Northwestern plants. No systems have been installed at plants drying Southern woods.

3.2.1.1 Multiple Spray Chambers. The Burley Scrubber, the most common wet scrubbing device used today, employs three to five spray chambers in series.[1] The five-chamber model contains a final demisting zone where a high-speed centrifugal fan removes droplets. The three-chamber model, which is currently being marketed, requires no fan and has an operating pressure drop of only 62 to 124 Pa (0.25 to 0.50 in. water). The three-zone unit is reported to meet Oregon's 10 percent opacity limit on dryer exhausts that have moisture contents of at least 24 percent by volume.[2] This device is designed to treat the exhaust from a single steam-heated or gas-fired dryer and generally is installed above the dryer. Chapter 6 contains the results of emissions tests of Burley Scrubbers and several other wet-scrubbing devices. The removal efficiency of Burley Scrubbers for particulate and condensible emissions generally is less than 50 percent. From recent Oregon Department of Environmental Quality (ODEQ) Method 7 tests, ODEQ reports that this scrubber can limit particulate and condensible emissions to 3.2 g/m^2, 9.5-mm basis (0.65 $lb/1,000\ ft^2$, 0.375-in. basis), for Western woods.[3]

3.2.1.2 Combination Packed Tower and Cyclonic Collectors. An example of a combination packed tower and cyclonic collector is the Georgia-Pacific Emission Eliminator (now marketed by Coe Manufacturing Company), which consists of a spray section followed by a bank of 2 to 12 cyclones in parallel and a packed spray tower.[4 5] The packed tower may be equipped with fiber-pad mist eliminators. A schematic diagram of the system is given in Figure 3-1. Georgia-Pacific Emission Eliminators have been installed to treat the exhausts of from one to three steam-heated or direct-fired veneer dryers. Because of their size, the units are installed outside of the buildings housing the dryers. Overall pressure drop across such a system is approximately 2,860 Pa (11.5 in. water) without the mist eliminator and 4,850 Pa (19.5 in. water) with the mist eliminator.[4] Emission test results for these units are given in Chapter 6. Removal efficiencies for particulate and condensible

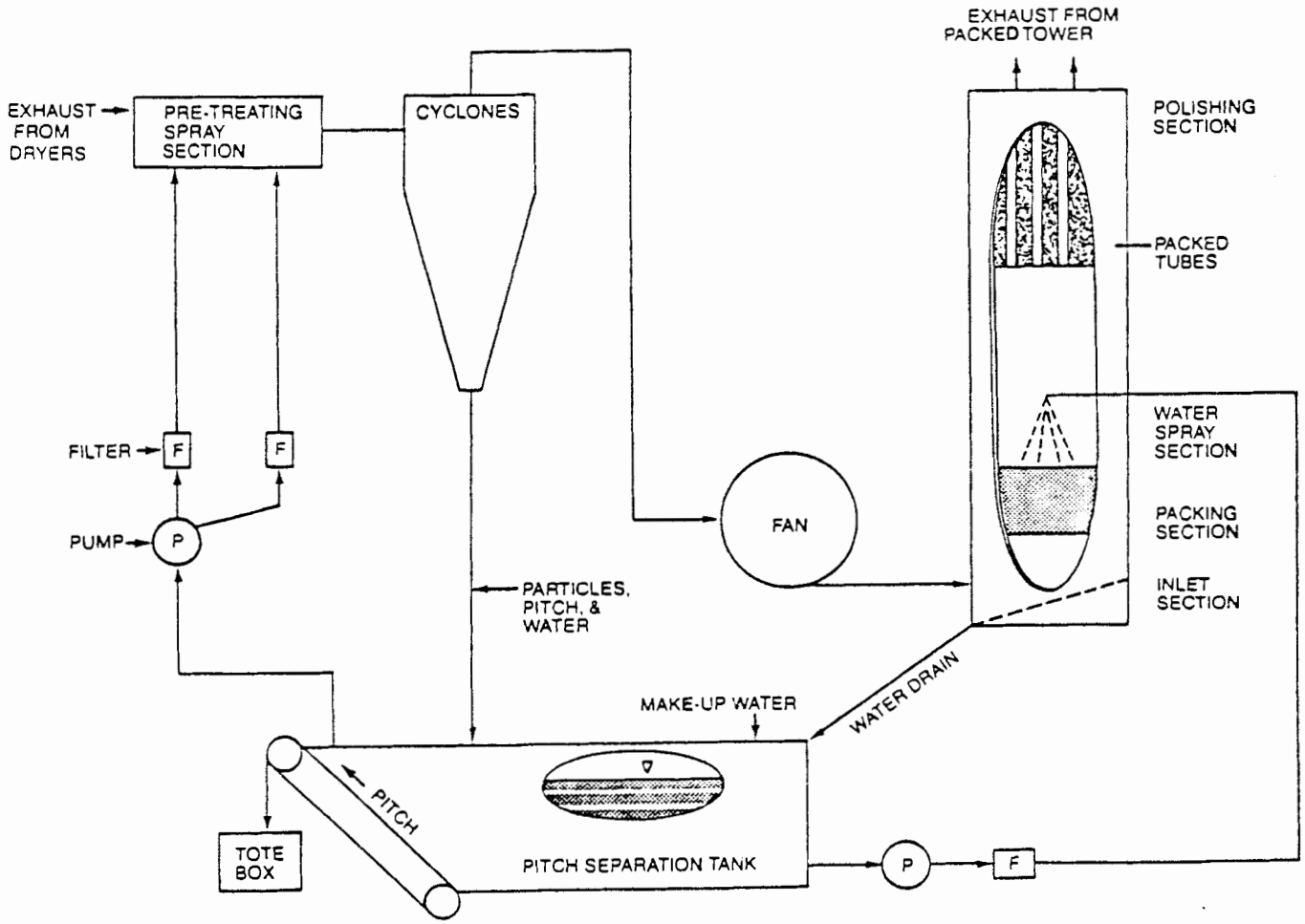

Figure 3-1. Georgia-Pacific Emission Eliminator.[6]

organic emissions have been measured through ODEQ Method 7 at up to 59 percent without the mist eliminator and up to 91 percent with the mist eliminator. ODEQ reports that these units with mist eliminators can limit particulate and condensible emissions to 1.2 g/m^2, 9.5-mm basis (0.25 lb/1,000 ft^2, 0.375-in. basis), for steam-heated and gas-fired dryers; 1.6 g/m^2, 9.5-mm basis (0.35 lb/1,000 ft^2, 0.375-in. basis), for wood-fired dryers with fuel moisture content less than 20 percent; and 1.8 g/m^2, 9.5-mm basis (0.40 lb/1,000 ft^2, 0.375-in. basis), for wood-fired dryers with fuel moisture content of 20 percent or greater.[3]

Various simple wet-scrubbing devices have been installed on Northwestern veneer dryers in the past 10 years. Most of these wet scrubbers never have received widespread use. Emission reductions of these units are not expected to be better than those of the Burley and Georgia-Pacific scrubbers without mist eliminators.[7] Emissions data for two units, the Buchholz Scrubber and the Leckenby Scrubber, are given in Chapter 6.

3.2.1.3 Sand Filter Scrubbers. The Rader SandAir Filter is a device incorporating a wet-scrubbing section followed by a wet-sand filter and mist eliminator. Figure 3-2 is a schematic diagram of the system. The Rader SandAir Filter has been installed at more than six plywood plants in the Northwest.[8] Existing systems treat the exhaust from two or more steam-heated dryers. The larger particulate material is removed in the scrubber, while a portion of the remaining organic material is collected in the filter bed or the mist eliminator. A water spray carries the condensed material through the filter bed to a separation system. The design pressure drop of the SandAir unit is approximately 4,500 kPa (18 in. water). Emission data for this device are summarized in Chapter 6. The results indicate that up to 90 percent of particulate and condensible organic material (as defined by ODEQ Method 7) may be removed by the SandAir system.

3.2.1.4 Ionizing Wet Scrubbers. Ionizing wet scrubbers have been under development as veneer dryer emission control devices for several years. Several Ceilcote Ionizing Wet Scrubbers have been installed on dryers in the Northwest.[9] The Ceilcote unit has four main collection

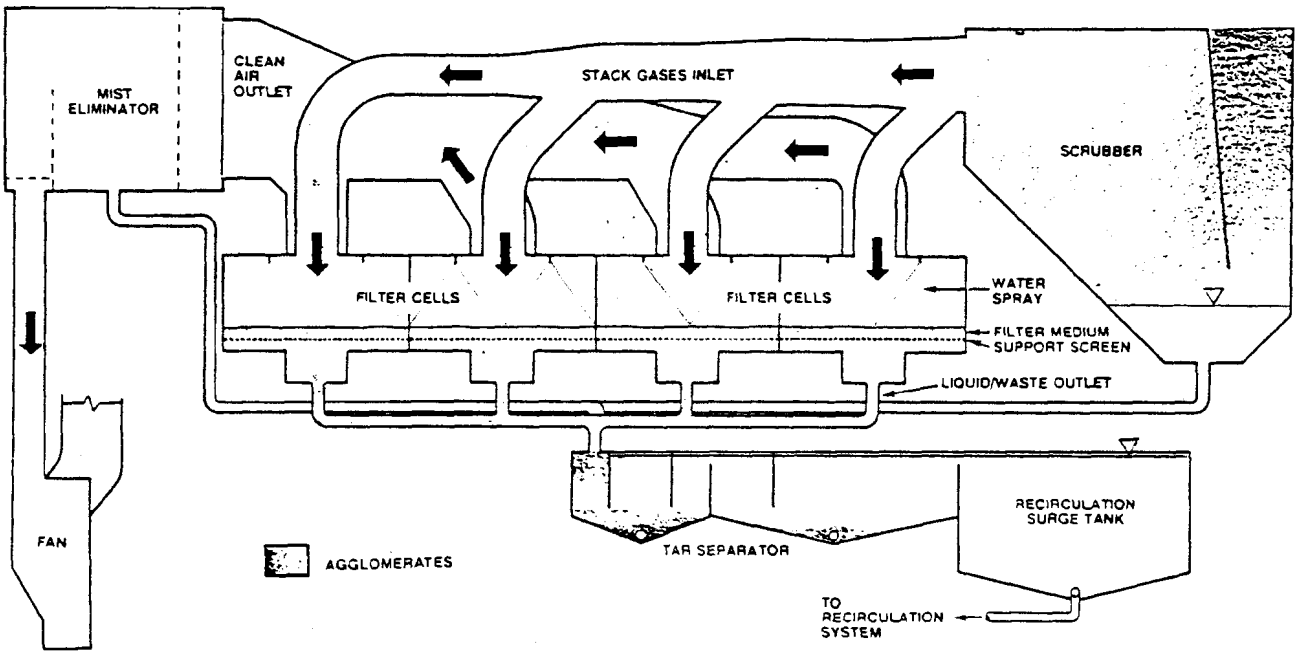

Figure 3-2. Rader SandAir filter.[8]

features: (1) a water spray; (2) packed towers; (3) electrostatic collection plates; and (4) a mist eliminator. One packed tower is placed on each side of the collection plates. Ceilcote makes both single- and dual-stage units, the dual-stage units having two sets of collection plates placed in series. Although no emission data have been published showing removal efficiencies of full-scale units, a pilot unit demonstrated 57 to 84 percent removal of particulate and condensible organic emissions as measured by ODEQ Method 7.[10] ODEQ has summarized several tests of exhausts from full-scale units. The agency's conclusion is that Ceilcote units can limit particulate and condensible emissions to 1.2 g/m^2, 9.5-mm basis (0.25 lb/1,000 ft^2, 0.375-in. basis), for steam-heated and gas-fired dryers; 1.6 g/m^2, 9.5-mm basis (0.35 lb/1,000 ft^2, 0.375-in. basis), for wood-fired dryers with fuel moisture content less than 20 percent; and 1.8 g/m^2, 9.5-mm basis (0.40 lb/1,000 ft^2, 0.375-in. basis), for wood-fired dryers with fuel moisture content of 20 percent or greater.[3] Ionizing wet scrubbers have only been used on wood-fired and gas-fired dryers.

3.2.2 Incineration

Veneer dryer emissions are controlled at some locations by incineration in wood-fired boilers or furnaces. The entire exhaust flow from a steam-heated veneer dryer sometimes can be sent to a boiler, while only a portion of the exhaust from a direct-fired dryer is normally returned to the furnace or fuel cell. At least one Southern plant has direct-fired dryers with exhaust gas recycle to the furnace, but no such systems have been tested for emissions removal. Boiler incineration of veneer dryer emissions has not been demonstrated on a Southern pine veneer dryer. However, Georgia-Pacific[11] reports problems with ducting any type of Southern pine dryer exhaust for any distance because of condensation. Condensation often occurs in the dryer, so insulation is of little value. In such cases, steam tracing of the ducts may be a viable alternative, although it has not been demonstrated in this application.

3.2.2.1 Boiler Incineration. Boiler incineration systems have been installed in at least 13 plants in the Northwest.[12] With this method, dryer exhaust is used as combustion air in the boiler. Dryer

exhaust can be introduced as underfire air and/or overfire air. The most sophisticated systems involve automatic distribution of dryer exhaust as overfire and underfire air, according to steam demand.[12]

Because no additional combustion device is required in boiler incineration, the main capital expenditures are for ductwork, fans, pressure controllers, and boiler oversizing or modifications. All ducts are heavily insulated to prevent condensation of dryer emissions. Boiler modifications include installing water-cooled grates as well as ports for introducing dryer exhaust.[12] Dryer exhaust has been ducted to boilers located over 350 m from the dryer.[13]

Several generalizations can be made about boiler incineration systems. Furnace temperatures of 1,190° C (2,000° F) or greater are found in most wood-fired boilers.[14] Residence times for fuel in the furnace section are on the order of 2.5 s for spreader-stoker boilers, but combustion air residence time may be less for these and dutch-oven boilers. These temperatures and residence times are above the minimum requirements for thermal destruction of hydrocarbons.[15] Therefore, destruction efficiency may be largely a function of the turbulence or degree of mixing in the high-temperature area of the boilers. Boiler designs provide for a high degree of mixing to promote combustion of volatile materials from the fuel. Temperature and residence time considerations support the potential for a high, overall removal rate of total veneer dryer emissions (perhaps greater than 90 percent) by boiler incineration. However, at least two attempts to measure the destruction efficiency of these systems for total organic emissions have been unsuccessful. A removal rate for condensible organic material of approximately 70 percent was suggested by the results of one test (see Chapter 6). A wet-scrubbing device on the boiler exhaust may be required to meet a high level of emissions reduction.

Boiler incineration may not be a viable control technique for certain existing plants. The combined dryer exhaust volume for a typical plywood mill approaches the capacity of the plant boiler to accept combustion air. In some cases, that capacity may be exceeded. For example, newer boilers that are designed to operate efficiently on

relatively low excess air might be unable to accept the exhaust volume from all dryers. For this reason also, new boilers might have to be oversized to accommodate the system.

3.2.2.2 Incineration in a Fuel Cell. The technology for heating dryers with wood-waste fuel has developed considerably in the last 10 years. The process involves burning fuel in a furnace or fuel cell and using the hot combustion gases as an energy source for the dryer. A portion of the dryer exhaust gas is returned to a blending zone of the furnace or to a blend box and is mixed with the hot combustion gas before being returned to the dryer. Combustion gases must be blended with dryer gases because combustion gases are too hot for direct injection to the dryer. Figure 3-3 is a schematic diagram of a typical system. The amount of dryer exhaust that reaches the blend box varies among systems.[16 17 18] Systems that recycle a large fraction of the dryer exhaust (e.g., 65 percent) typically have blend box exit temperatures of 427° C (800° F). When a smaller fraction of dryer exhaust is recycled (e.g., 35 percent), blend box exit temperatures are typically 621° C (1,150° F). High-temperature ductwork and insulation are needed in the latter case.

At least three types of systems currently are available.[16 17 18] In the most common system, dry wood-waste is burned in a cyclonic burner that is designed to hold wood particles in the burner until combustion is complete. Ambient air is introduced as combustion air. Hot combustion gases from the burner are mixed with dryer exhaust in a blend box and are returned to the dryer. Blend box exit temperatures are 427° to 649° C (800° to 1,200° F).

In a second type of wood-fired system, wet or dry wood-waste is burned in a pile furnace. Combustion air consists of ambient air and (typically) exhaust from the dry end of a veneer dryer. Dryer exhaust is introduced at various points in four combustion chambers, including the primary chamber containing the wood pile. Temperatures range from approximately 982° to 1,093° C (1,800° to 2,000° F) at the primary chamber to 427° C (800° F) at the final chamber exit.[19]

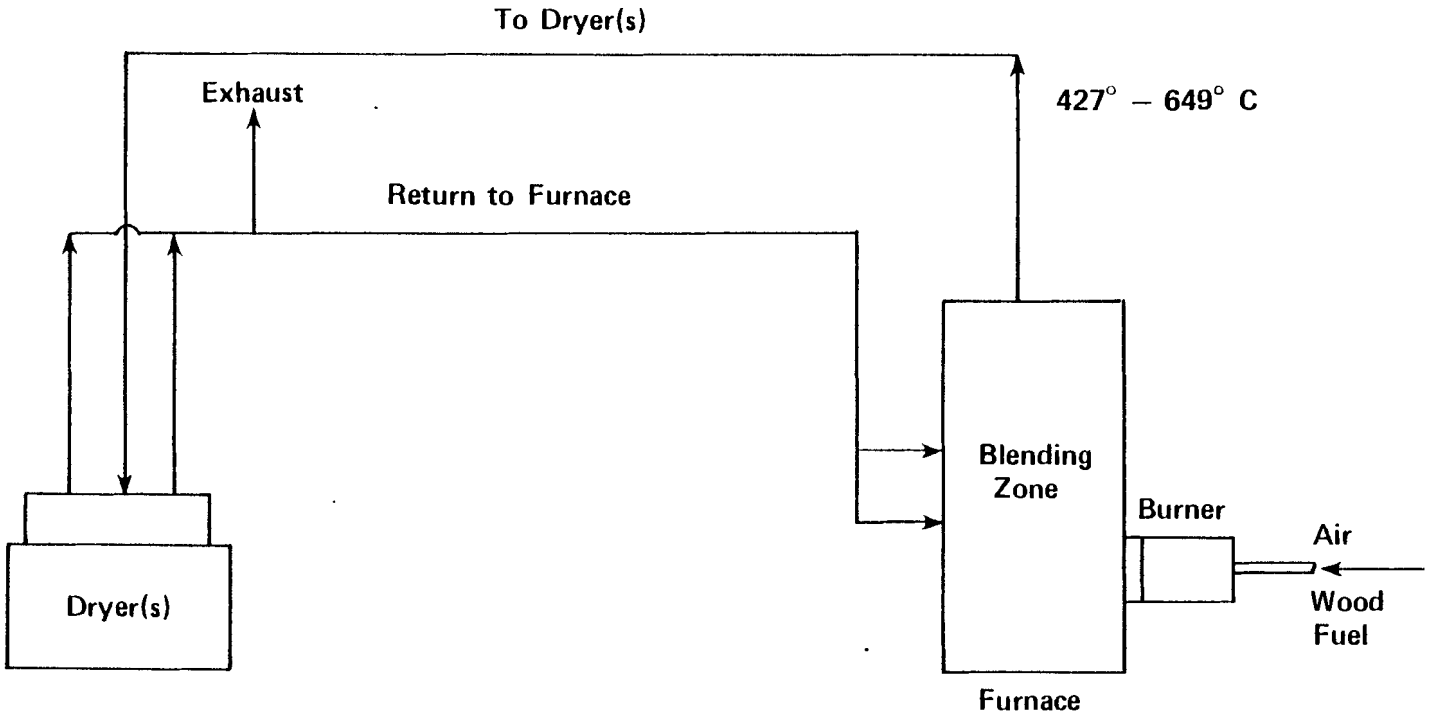

Figure 3-3. Wood-fired dryer system with partial incineration in a fuel cell.

Finally, a direct-fired system is used in which wet or dry wood-waste is introduced into a fluidized furnace. Ambient air is used as combustion air. Combustion products at approximately 871° to 982° C (1,600° to 1,800° F) are mixed with the dryer return flow in a blend box; the resulting mixture is ducted to the dryer at 427° to 649° C (800° to 1,200° F).[19]

Emissions data for wood-fired veneer dryer systems are given in Chapter 6. The fate of the condensible organic material is masked by the inorganic particulate (ash) load characteristic of direct-fired systems. Existing data do not indicate the percent of pollutants removed in the blend box. In such systems, inorganic particulate matter (ash) may settle out in the dryer or impinge on the veneer surface, whereas organic material may be partially destroyed in the blend area. The exhaust from wood-fired veneer dryer systems is sometimes further controlled by high-efficiency wet-scrubbing devices such as the Georgia-Pacific Emission Eliminator or the Ceilcote Ionizing Wet Scrubber.

EPA experience suggests that incineration of all dryer exhaust in a fuel cell or furnace could be achieved in wood-fired systems. Figure 3-4 is a conceptual diagram of such a system. Ambient air would be heated to required dryer temperatures in a high-temperature air-to-air heat exchanger by hot furnace exhaust gases. A portion of the dryer exhaust gases would be used as combustion air for the wood fuel, and another portion (perhaps 40 percent) would be recycled to the dryer. Maintaining a fuel cell exhaust temperature of 760° to 871° C (1,400° to 1,600° F) and providing sufficient residence time should achieve organic emissions removal efficiencies of greater than 90 percent. The disadvantages of this system include the need to modify currently available burner designs, increased difficulty in balancing air flows due to one or more additional fans and control dampers, and potentially increased fuel requirements. Balancing problems would tend to be more severe for systems involving multiple dryers, while additional fuel requirements would be crucial for plants that are marginally self-sufficient in fuel (e.g., layup plants). It is stressed that this is a conceptualized system and that the required technology (especially burner technology) may not currently exist.

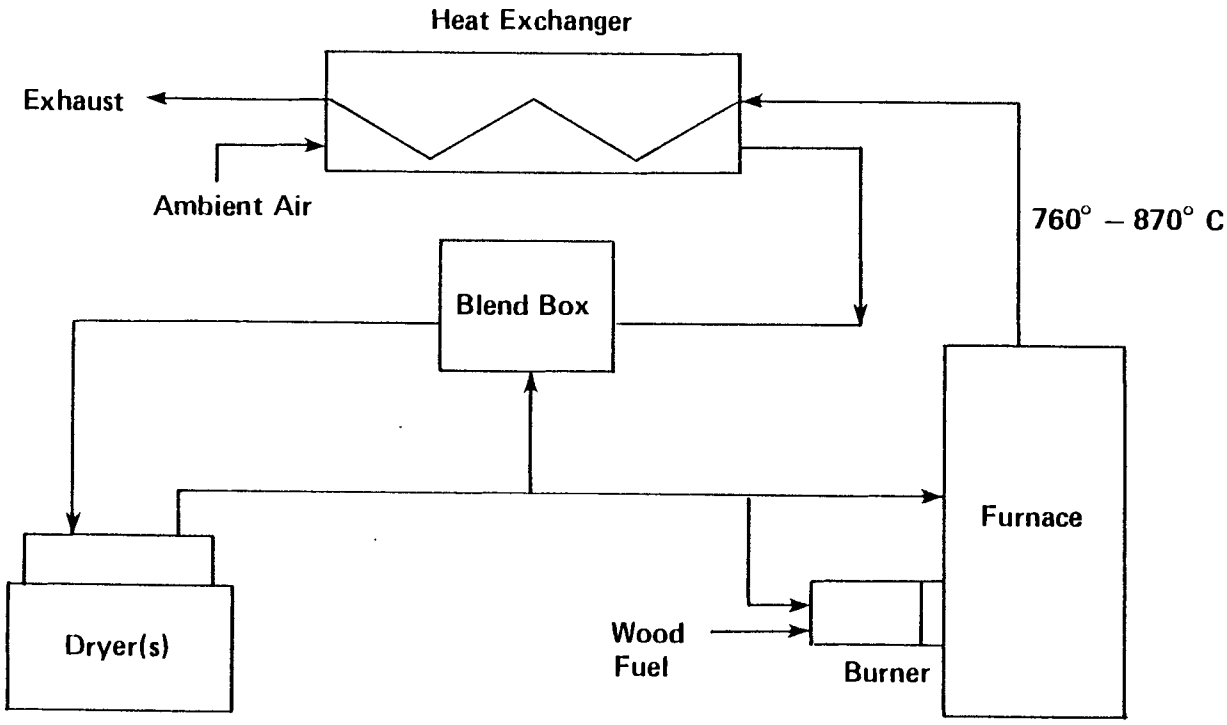

Figure 3-4. Wood-fired system with complete incineration of dryer exhaust in a fuel cell.

3.2.2.3 Catalytic Incineration. Pilot studies have been conducted on a catalytic incineration system for veneer dryer exhausts. In tests of a unit handling 0.065 $stdm^3/s$ (138 $stdft^3/min$) at 259° C (499° F) and 316° C (601° F), the emissions reduction was 93 percent, as measured by ODEQ Method 7,[20] and there were no visible emissions (except for steam). At 183° C (361° F), the emissions reduction was 84 percent and blue haze emissions went above 10 percent opacity. Major disadvantages of this system are the need for supplementary fuel and plugging of the catalyst bed. No sales of the system have been made because it is costly compared to the Burley scrubber.[1]

3.2.3 Low-Temperature Drying

Dryer emissions on a per-unit-of-production basis may be reduced by lowering dryer temperatures. This procedure reduces veneer production rates, because longer drying times are required at lower temperatures. Low-temperature drying may only be feasible at facilities that have excess drying capacity, an uncommon situation. Maintaining the required air circulation rates in the dryer may substantially increase the electrical energy costs per unit of production. In tests of three dryers, particulate and total organic emissions (as measured by a Washington State University method) were reduced by lowering dryer temperatures (see Chapter 6). Emission reductions varied greatly, with the highest reduction being 74 percent.[21]

3.2.4 Control of Fugitive Dryer Emissions

Fugitive emissions can comprise a significant portion of the total emissions from a veneer dryer. The main factors affecting the quantity of fugitive emissions are the type of dryer, the condition of door seals and end baffles, and stack damper settings. In the Northwest, stack dampers generally are set to maintain a desirable moisture level inside the dryers. Damper settings also can be used to balance the air flows within a dryer and, thus, to minimize energy loss. This is especially true for longitudinal dryers, for which it is desirable to maintain neutral pressure at dryer ends by means of the dampers. In the South, dampers are set in the closed position on many jet dryers. Even with the dampers closed, 1.5 to 4 m^3/s of exhaust gas may escape through the annuli between dampers and stack walls of a three-zone jet dryer.

However, material balance calculations show that in such dryers the evaporated water alone would result in exhaust rates of approximately 3 m^3/s. The emissions that do not leave through stack exhausts must escape as fugitive emissions through the doors, skins, and ends of the dryers. In-plant observations indicate that fugitive emissions may be significant, but quantitative measurements of fugitive emissions are not available.

Control techniques for minimizing fugitive emissions include maintenance of door seals, dryer skins, tops, and end baffles; proper balancing of air flows (considering the effect of damper settings on internal dryer pressure); and use of end-sealing sections. Dryer doors can be sealed and shimmed as necessary to eliminate visible emissions caused by leaks. New seals are usually needed only every 2 years; however, quarterly inspection and maintenance of seals may be reasonable because of the energy losses and emissions associated with leaking doors.[1 22] Maintenance of skins and tops consists of applying insulating, sealing material where feasible and replacing those portions when other methods are no longer adequate.

End-sealing sections are pressurized sections added to a dryer to prevent emissions and energy loss from the ends of a dryer or to prevent infiltration of cold air into the dryer. End seal sections may be positively or negatively pressurized. No available data show the effectiveness of end seal sections in controlling fugitive emissions. One vendor, who regularly installed end seal sections with scrubbers, finds that another method of sealing dryer skins and doors is more effective than are end seal sections.[2] A sealing compound is used on the dryer skins and doors, and in conjunction dryer operation is evaluated to maximize dryer efficiency. However, at least one dryer vendor is considering seal sections on the green ends of jet dryers as a means of reducing total exhaust flow.[23]

3.3 PANEL SANDER EMISSION CONTROL TECHNIQUES

Uncontrolled plywood panel sander emissions are emissions that pass through a primary product recovery cyclone. These cyclones have traditionally been large, conventional units with diameters typically 3.0 m

(10 ft). However, in some cases, two separate cyclones have been installed to handle the sanderdust from the tops and bottoms of the panels.[24]

3.3.1 High-Efficiency Cyclones

With increasing State pressure to control sanderdust emissions, installation of high-efficiency cyclones, either as single units or in banks of smaller cyclones, has replaced installation of a single, conventional cyclone. A typical bank of cyclones consists of four cyclones that are in parallel and empty the collected material into a single hopper.[25] The advantage of high-efficiency cyclones is high removal efficiency without a baghouse. Emissions data from sanderdust cyclones are relatively abundant; however, the input rate to the cyclone has been determined in relatively few tests (see Chapter 6). Removal efficiencies for sanderdust cyclones that had been tested averaged from 94 to 99.5 percent. The dimensions of these cyclones are not known. These removal efficiencies are high, considering the particle size distribution of sanderdust. Plywood sanderdust size is reported to be between 10 and 80 μm (99.8 percent by weight) with a mean particle size of 22 μm on a count basis.[26]

3.3.2 Fabric Filters

When new sanders are installed in the Southern States, fabric filter systems (baghouses) or high-efficiency cyclones will be used. Figure 3-5 is a cutaway view of a type of fabric filter system often used to control sanderdust emissions. If current practices continue, new sanders in the Pacific Northwest probably will be controlled by single cyclones (achieving perhaps 94 to 99 percent removal) followed by a fabric filter system. The exact percent removal of these systems cannot be calculated because inlet loadings generally are not measured. However, baghouse emissions from plywood sanding operations are typically 0.009 g/stdm^3 (0.004 gr/stdft^3).[28] This figure corresponds to 99.9 percent removal of emissions from a touch sanding system operating at a moderate rate (0.25 mm depth of cut, 2,100 m^2/h of surface area sanded). While this high removal is suggested by existing data, average removal through the life of the system may be limited to 99 percent. Given the

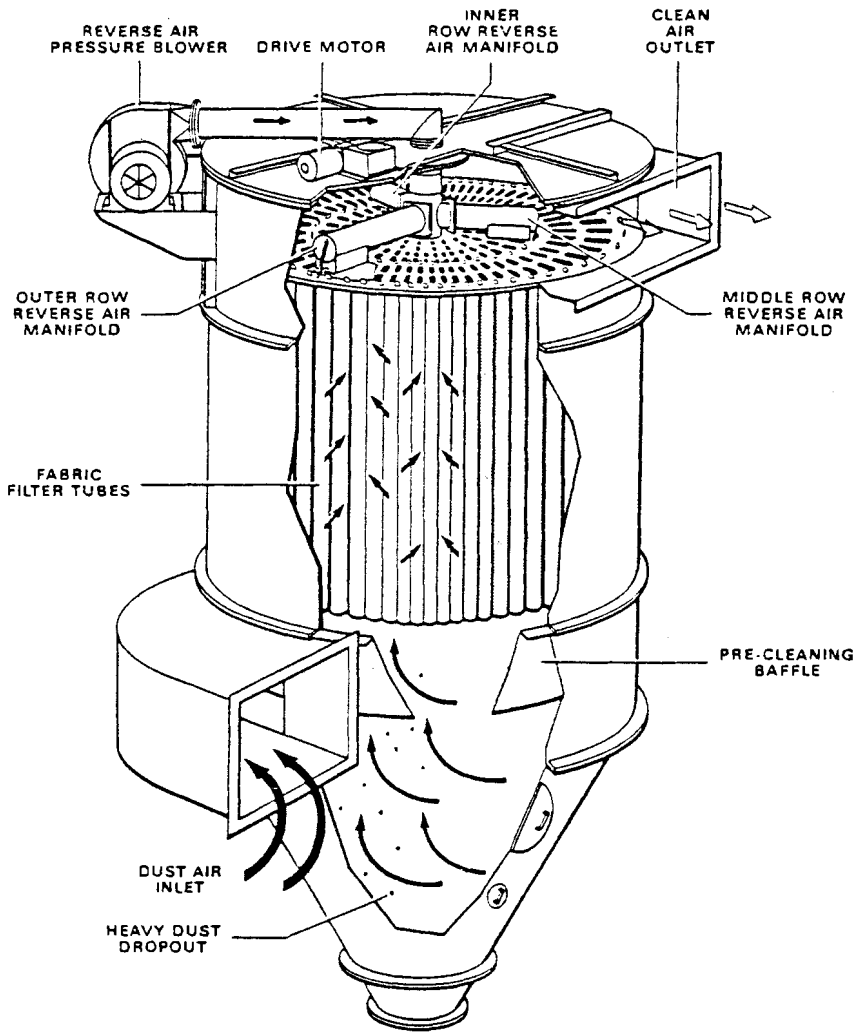

Figure 3-5. Fabric filter system for control of sanderdust emissions.[27]

choice, some firms elect to try to meet State emission limits using only high-efficiency cyclones because of the explosion hazard of baghouses.

3.4 CONCLUSIONS

Boiler incineration appears to be the best control technique for emissions from steam-heated dryers, based on temperature and residence time considerations. Incinerating a portion of dryer emissions in a fuel cell in conjunction with high-efficiency wet scrubbing of the remaining emissions appears to be the best existing technique for controlling emissions from wood-waste-fired dryers. High-efficiency scrubbing appears to be the best control technique for gas-fired dryers. Further emissions testing is needed, particularly on Southern dryers, to establish removal rates for each of these control techniques.

Control of emissions from plywood sanding operations can best be achieved by baghouses in conjunction with primary collectors (cyclones). Overall removal rates of greater than 99 percent can be achieved.

3.5 REFERENCES

1. Letter from Bosserman, P. B., Oregon Department of Environmental Quality, to McCarthy, J. M., Research Triangle Institute. November 29, 1982. Comments on draft Control Techniques Document.

2. Telecon. McCarthy, J. M., Research Triangle Institute, with Potter, G., Burley Industries. February 19, 1981. Wet-scrubbing devices.

3. Bosserman, D. B. Controls for Veneer and Wood Particle Dryers. Oregon Department of Environmental Quality. Portland, OR. (Presented at the Air Pollution Control Association, Pacific Northwest International Section Annual Meeting. Spokane. November 3, 1981.)

4. Tretter, V. J., Jr. Plywood Veneer Dryer Emission Control Systems. Georgia-Pacific Corporation. Atlanta, GA. (Presented at the Annual Meeting of the Air Pollution Control Association. Portland. June 27-July 1, 1976.) 17 p.

5. Telecon. McCarthy, J. M., Research Triangle Institute, with Hammes, D. A., Georgia-Pacific Corporation. February 19, 1981. Wet-scrubbing devices.

6. Letter and attachments from Hammes, D. A., Georgia-Pacific Corporation, to McCarthy, J. M., Research Triangle Institute. March 2, 1981. Response to request for cost data.

7. Oregon Department of Environmental Quality, Air Quality Control Division. Veneer Dryer Control Device Evaluation, Supplemental Report. Portland, OR. December 14, 1976.

8. Letter and attachments from Hirsch, J., Rader Companies, Inc., to McCarthy, J. M., Research Triangle Institute. February 24, 1981. Response to request for information on sand filters.

9. Telecon. McCarthy, J. M., Research Triangle Institute, with Frega, V., The Ceilcote Company. February 19, 1981. Ionizing wet scrubbers.

10. Letter and attachments from Wellman, E. A., BWR Associates, to McCarthy, J. M., Research Triangle Institute. December 22, 1980. Veneer dryer emission data.

11. Letter from Mortensen, D. K., Georgia-Pacific Corporation, to McCarthy, J. M., Research Triangle Institute, January 31, 1983. Comments on draft Control Techniques Document.

12. Telecon. McCarthy, J. M., Research Triangle Institute, with Hagel, P. M., P. M. Hagel and Associates, Inc. June 2, 1980. Boiler incineration of veneer dryer exhaust.

13. Letter and attachments from Bartels, H. H., Champion International Corporation, to McCarthy, J. M., Research Triangle Institute. September 17, 1980. Response to request for information on boiler incineration systems.

14. Telecon. McCarthy, J. M., Research Triangle Institute, with McBurney, B., McBurney Corporation. January 21, 1981. Boiler incineration systems.

15. Memorandum from Mascone, D. C., EPA, to Farmer, J. R., EPA. June 11, 1980. Thermal incineration performance for NSPS.

16. Research Triangle Institute. Trip Report on Visit to Boise-Cascade Corporation, Albany, OR. Research Triangle Park, NC. September 2, 1980.

17. Sullivan, Paul. Direct-Fired Wood Waste Combustion Systems. In: Modern Plywood Techniques, Proceedings of the Fifth Plywood Clinic, White, V. S. (ed.). San Francisco, Miller Freeman Publications. 1977. p. 59-65.

18. Research Triangle Institute. Trip Report on Visit to Boise-Cascade Corporation, Moncure, NC. Research Triangle Park, NC. August 28, 1980.

19. Letter and attachments from Emery, J. A., American Plywood Association, to McCarthy, J. M., Research Triangle Institute. December 16, 1981. Industry comments on draft documents.

20. Mick, Allan. Current Particulate Emissions Control Technology for Particleboard and Veneer Dryers. Mid-Willamette Valley Air Pollution Authority. Salem, OR. (Presented at the Meeting of the Pacific Northwest International Section of the Air Pollution Control Association. Seattle. November 28-30, 1973.).

21. Monroe, F. L., W. L. Bamesberger, and D. F. Adams. An Investigation of Operating Parameters and Emission Rates of Plywood Veneer Dryers--Final Report. Washington State University. Pullman, WA. July 1972. 50 p.

22. Research Triangle Institute. Trip Report on Visit to Timber Products Company, Medford, OR. Research Triangle Park, NC. September 23, 1980.

23. Telecon. McCarthy, J. M., Research Triangle Institute, with McMahon, I. J., Coe Manufacturing Company. November 20, 1980. Veneer dryers.

24. Telecon. McCarthy, J. M., Research Triangle Institute, with Fick, O., International Paper Company. October 31, 1980. Plywood sanders.

25. Telecon. Chessin, R., Research Triangle Institute, with Tice, G. W., Georgia-Pacific Corporation. December 18, 1980. Plywood sanders.

26. Tretter, V. J., R. C. Sherwood, and A. H. Mick. Technology for the Control of Atmospheric and Waterborne Emissions from Plywood and Lumber Manufacture. Georgia-Pacific Corporation. Portland, OR. (Presented at the Annual Meeting of the American Institute of Chemical Engineers. Chicago. November 1976.) 17 p.

27. Letter and attachments from Walus, M., Carter-Day Company, to Chessin, R. L., Research Triangle Institute. February 11, 1981. Response to request for information on sanderdust control systems.

28. O'Dell, F. G., et al. Pacific Northwest Emission Factors Manual. Air Pollution Control Association, Pacific Northwest International Section. 1974. p. F-3.

4. COST OF EMISSIONS CONTROL

4.1 INTRODUCTION

Costs for controlling emissions from veneer dryers include capital and operating expenditures. Costs vary depending upon a number of factors, including plant age, plant layout, type of processing equipment, operational parameters, and geography and climate. This chapter presents emissions control costs for six model plants believed to be representative of existing plywood facilities and new plants likely to be built in the next 5 to 10 years.

Two basic types of control techniques are used by the industry: thermal incineration and wet scrubbing. The cost difference between a boiler incineration system and an efficient scrubbing system such as a Georgia-Pacific, Ceilcote, or Sandair scrubber is not great for some plants. A company decision regarding an emissions control system is thus based only partially on cost.

4.2 MODEL PLANTS

Softwood veneer dryers (hereafter called veneer dryers) and panel sanders are the plywood production processes that have potentially significant emissions. Hardwood veneer drying and sanding are not considered in this document because emissions from these processes are insignificant compared to emissions from softwood processes.

All of the model plants represent either new dryers and sanders installed in existing plants or new plywood plants. This is done for the sake of example and does not imply that the control techniques presented herein cannot be applied to existing process equipment. In general, the capital costs of retrofitting emissions controls to existing process equipment will be higher than the capital costs of installing the control systems with new process equipment. However, in the case

of boiler incineration, boilers that are already operated with high excess air may require lower capital costs for modification than the incremental capital cost of oversizing a new boiler to accept veneer dryer emissions. The possibility also exists that a boiler may not have sufficient capacity to accept veneer dryer emissions and must be determined on a case-by-case basis.

The majority of veneer dryers built in the last 5 years currently are jet-impingement-type dryers (jet dryers), a trend expected to continue.[1] Coe Manufacturing Company and Irvington-Moore Company are the primary manufacturers of jet dryers. Coe, which dominates the industry in dryer sales, sold approximately 80 new jet dryers to U.S. plants between 1976 and 1981.[2] Most of these units are in plants in the Southern States, where virtually all growth in the softwood plywood industry will occur. However, single dryers may be sold to plants in other areas to replace old dryers or to add to existing plant capacities.

Veneer dryers may be classified according to their source of heat energy. Steam-heated (indirect-heated) dryers are the more common type of dryer. The air in these units is heated as it passes over internal steam coils. Direct-fired dryers are heated by hot gases of combustion from the burning of natural gas or wood fuel. As reflected in the model plants, wood-waste (sanderdust, plywood trim waste, and hogged bark) will be the predominant fuel for new direct-fired dryers.

Veneer dryers are designed according to the number of drying sections needed to achieve a desired drying rate. Drying sections are typically 1.8 to 2.1 m (6 to 7 ft) long; the number of sections per dryer ranges from 6 to 26.

New sanders are expected to be high-speed, wide-belt units capable of light or full sanding. Operation of these sanders will vary among plants because some plants sand all panels while others sand only a small fraction of the panels produced.

Model plants are used for cost analysis of emissions control techniques. These plants are believed to be representative of new dryers and sanders that would be installed at a wide range of plywood mills, both existing mills and those likely to be built. Following a

detailed discussion of these model plants, emissions control costs for each one are presented.

The six model plants described in Tables 4-1 through 4-6 and summarized in Table 4-7 include new veneer dryers and new plywood sanders. Model Plant 1 consists of a new, 16-section, steam-heated jet dryer and a new panel sander. This dryer is typical of new dryers installed in Western mills, but such units sometimes are installed in Southern mills.[3] For example, such a dryer might be built to replace one or two older dryers in a small- to medium-sized Western plant or a small Southern plant that produces 7.4 to 9.3 $\times$ 10^6 m^2/yr, 9.5-mm basis (80 to 100 $\times$ 10^6 ft^2/yr, 0.375-in. basis). This existing plant might employ 250 persons and operate 6,370 h/yr. Model Plant 2 includes a wood-fired jet dryer whose production rate equals that of Model Plant 1. Such a dryer is representative of a unit that might be installed at a small- to medium-sized Western plant or a small Southern plant using wood-fired dryers. This existing plant might have the same production rate, operating hours, and number of employees as does the existing plant described for Model Plant 1.

Model Plants 1 and 2 include new sanders that are assumed to operate 5,500 h/yr. This might be the case in a mill that sands a high percentage of its products.

Model Plant 3 consists of a new, 20-section, steam-heated jet dryer and a plywood sander. This model plant contains a dryer of the size likely to be installed at existing Southern plywood mills. Such an existing plant might be a medium-sized mill producing a total of 13.9 $\times$ 10^6 m^2/yr, 9.5-mm basis (150 $\times$ 10^6 ft^2/yr, 0.375-in. basis); operating 6,370 h/yr; and employing 300 persons. Model Plant 3 contains a plywood sander that operates 2,000 h/yr or about one shift per day. Western plants installing plywood sanders are required to install baghouses on new sanders. However, Southern plants that install sanders might install high-efficiency cyclones rather than baghouses. While some Southern plants do not produce sanded panels, sanders are expected to be installed where a market exists for sanded plywood. The number of panels sanded at a Southern mill seldom exceeds 50 percent of total production.[4]

TABLE 4-1. PARAMETERS FOR MODEL PLANT 1

Description: A single steam-heated dryer and a single plywood sander

Veneer dryer to be controlled:

Number of units	1
Type	New 16-section, steam-heated jet dryer
Production[a]	4.7×10^6 m^2/yr (51×10^6 ft^2/yr) final product; 5.9×10^6 m^2/yr (63×10^6 ft^2/yr) through dryer
Annual operating time	6,370 h
Exhaust flow rate	4.72 $stdm^3$/s (10,000 $stdft^3$/min) wet basis
Exhaust temperature, uncontrolled	163° C (325° F)
Uncontrolled emissions[b]	28 Mg/yr (31 ton/yr)

Sanders to be controlled:

Number of units	1
Type	Wide-belt panel sander
Production[c]	6.9×10^6 m^2/yr (74×10^6 ft^2/yr)
Annual operating time	5,500 h
Exhaust flow rate	14.2 $stdm^3$/s (30,000 $stdft^3$/min) wet basis
Exhaust temperature	21° C (70° F)
Uncontrolled emissions[d]	39.3 Mg/yr (43.3 ton/yr)

[a]Veneer dryer production rates are given on a 9.5-mm (0.375-in.)-thickness basis. Production through dryer includes 10 percent redry and 10 percent fall-down losses.

[b]Total particulate and condensible organic emissions are based upon the best available information for Douglas fir. Some other Western species are known to have lower emission rates. Southern softwoods (various pine species) may have higher emission rates.

[c]Sander production is based on a Western mill that sands both sides of the plywood.

[d]Particulate emissions controlled by high-efficiency cyclones.

TABLE 4-2. PARAMETERS FOR MODEL PLANT 2

Description: A single wood-fired dryer and a single plywood sander

Veneer dryer to be controlled:

Number of units	1
Type	New 12-section, wood-fired jet dryer
Production[a]	4.74×10^6 m^2/yr (51×10^6 ft^2/yr) final product; 5.9×10^6 m^2/yr (63×10^6 ft^2/yr) through dryer
Annual operating time	6,370 h
Exhaust flow rate	7.55 $stdm^3$/s (11,000 $stdft^3$/min) wet basis
Exhaust temperature, uncontrolled	163° C (325° F)
Uncontrolled emissions[b]	37 Mg/yr (41 ton/yr)

Sander to be controlled:

Number of units	1
Type	Wide-belt panel sander
Production[c]	6.9×10^6 m^2/yr (74×10^6 ft^2/yr)
Annual operating time	5,500 h
Exhaust flow rate	14.2 $stdm^3$/s (30,000 $stdft^3$/min) wet basis
Exhaust temperature	21° C (70° F)
Uncontrolled emissions[d]	39.3 Mg/yr (43.3 ton/yr)

[a]Veneer dryer production rates are given on a 9.5-mm (0.375-in.)-thickness basis. Production through dryer includes 10 percent redry and 10 percent fall-down losses.

[b]Total particulate and condensible organic emissions are based upon the best available information for Douglas fir. Some other Western species are known to have lower emission rates. Southern softwoods (various pine species) may have higher emission rates.

[c]Sander production is based on a Western mill that sands both sides of the plywood.

[d]Particulate emissions controlled by high-efficiency cyclones.

TABLE 4-3. PARAMETERS FOR MODEL PLANT 3

Description: A single steam-heated dryer and a single plywood sander

Veneer dryer to be controlled:

Number of units	1
Type	New 20-section, steam-heated jet dryer
Production[a]	5.9×10^6 m^2/yr (64×10^6 ft^2/yr) final product; 7.3×10^6 m^2/yr (79×10^6 ft^2/yr) through dryer
Annual operating time	6,370 h
Exhaust flow rate	6.13 $stdm^3$/s (13,000 $stdft^3$/min) wet basis
Exhaust temperature, uncontrolled	163° C (325° F)
Uncontrolled emissions[b]	35 Mg/yr (38 ton/yr)

Sander to be controlled:

Number of units	1
Type	Wide-belt panel sander
Production	3.3×10^6 m^2/yr (36×10^6 ft^2/yr)
Annual operating time	2,000 h
Exhaust flow rate	14.2 $stdm^3$/s (30,000 $stdft^3$/min) wet basis
Exhaust temperature	21° C (70° F)
Uncontrolled emissions[c]	11.0 Mg/yr (12.1 ton/yr)

[a]Veneer dryer production rates are given on a 9.5-mm (0.375-in.)-thickness basis. Production through dryer includes 10 percent redry and 10 percent fall-down losses.

[b]Total particulate and condensible organic emissions are based upon the best available information for Douglas fir. Some other Western species are known to have lower emission rates. Southern softwoods (various pine species) may have higher emission rates.

[c]Particulate emissions controlled by high-efficiency cyclones.

TABLE 4-4. PARAMETERS FOR MODEL PLANT 4

Description: A single veneer dryer and a single plywood sander

Veneer dryer to be controlled:

Number of units	1
Type	New 15-section, wood-fired jet dryer
Production[a]	5.9×10^6 m^2/yr (64×10^6 ft^2/yr) final product; 7.3×10^6 m^2/yr (79×10^6 ft^2/yr) through dryer
Annual operating time	6,370 h
Exhaust flow rate	9.91 $stdm^3$/s (14,000 $stdft^3$/min) wet basis
Exhaust temperature, uncontrolled	163° C (325° F)
Uncontrolled emissions[b]	46 Mg/yr (51 ton/yr)

Sander to be controlled:

Number of units	1
Type	Wide-belt panel sander
Production	3.3×10^6 m^2/yr (36×10^6 ft^2/yr)
Annual operating time	2,000 h
Exhaust flow rate	14.2 $stdm^3$/s (30,000 $stdft^3$/min) wet basis
Exhaust temperature	21° C (70° F)
Uncontrolled emissions[c]	11.0 Mg/yr (12.1 ton/yr)

[a]Veneer dryer production rates are given on a 9.5-mm (0.375-in.)-thickness basis. Production through dryer includes 10 percent redry and 10 percent fall-down losses.

[b]Total particulate and condensible organic emissions are based upon the best available information for Douglas fir. Some other Western species are known to have lower emission rates. Southern softwoods (various pine species) may have higher emission rates.

[c]Particulate emissions controlled by high-efficiency cyclones.

TABLE 4-5. PARAMETERS FOR MODEL PLANT 5

Description: A new plywood plant with three steam-heated dryers and a single plywood sander

Plywood production: 17.2×10^6 m^2/yr, 9.5-mm basis (185×10^6 ft^2/yr, 0.375-in. basis)

Plant annual operating time: 6,370 h

Number of employees: 350

Land area: 0.20 km^2 (50 acres)

Veneer dryers to be controlled:

Number of units	3
Type	New steam-heated jet dryers, 58 sections total
Production[a]	17.2×10^6 m^2/yr (185×10^6 ft^2/yr) final product; 21.1×10^6 m^2/yr (228×10^6 ft^2/yr) through dryer
Annual operating time	6,370 h
Exhaust flow rate	17.5 $stdm^3$/s (37,000 $stdft^3$/min) wet basis
Exhaust temperature, uncontrolled	163° C (325° F)
Uncontrolled emissions[b]	101 Mg/yr (111 ton/yr)

Sander to be controlled:

Number of units	1
Type	Wide-belt panel sander
Production	3.3×10^6 m^2/yr (36×10^6 ft^2/yr)
Annual operating time	2,000 h
Exhaust flow rate	14.2 $stdm^3$/s (30,000 $stdft^3$/min) wet basis
Exhaust temperature	21° C (70° F)
Uncontrolled emissions[c]	11.0 Mg/yr (12.1 ton/yr)

[a]Veneer dryer production rates are given on a 9.5-mm (0.375-in.)-thickness basis. Production through dryer includes 10 percent redry and 10 percent fall-down losses.

[b]Total particulate and condensible organic emissions are based upon the best available information for Douglas fir. Some other Western species are known to have lower emission rates. Southern softwoods (various pine species) may have higher emission rates.

[c]Particulate emissions controlled by high-efficiency cyclones.

TABLE 4-6. PARAMETERS FOR MODEL PLANT 6

Description: A new plywood plant with three wood-fired dryers and a single plywood sander

Plywood production: 17.2×10^6 m^2/yr, 9.5-mm basis (185×10^6 ft^2/yr, 0.375-in. basis)

Plant annual operating time: 6,370 h

Number of employees: 350

Land area: 0.20 km^2 (50 acres)

Veneer dryers to be controlled:

Number of units	3
Type	New wood-fired jet dryers, 43 sections total
Production[a]	17.2×10^6 m^2/yr, 9.5-mm basis (185×10^6 ft^2/yr, 0.375-in. basis) final product; 21.1 m^2/yr (228×10^6 ft^2/yr) through dryer
Annual operating time	6,370 h
Exhaust flow rate	28.3 $stdm^3$/s (39,000 $stdft^3$/min) wet basis
Exhaust temperature, uncontrolled	163° C (325° F)
Uncontrolled emissions[b]	134 Mg/yr (148 ton/yr)

Sander to be controlled:

Number of units	1
Type	Wide-belt panel sander
Production	3.3×10^6 m^2/yr (36×10^6 ft^2/yr)
Annual operating time	2,000 h
Exhaust flow rate	14.2 $stdm^3$/s (30,000 $stdft^3$/min) wet basis
Exhaust temperature	21° C (70° F)
Uncontrolled emissions[c]	11.0 Mg/yr (12.1 ton/yr)

[a]Veneer dryer production rates are given on a 9.5-mm (0.375-in.)-thickness basis. Production through dryer includes 10 percent redry and 10 percent fall-down losses.

[b]Total particulate and condensible organic emissions are based upon the best available information for Douglas fir. Some other Western species are known to have lower emission rates. Southern softwoods (various pine species) may have higher emission rates.

[c]Particulate emissions controlled by high-efficiency cyclones.

TABLE 4-7. SUMMARY OF MODEL PLANT PARAMETERS

	Veneer dryer to be controlled								Plywood sander to be controlled					
	Veneer dryers		Veneer production[a]		Exhaust flow rate		Uncontrolled emissions[b]		Sanded plywood production		Exhaust flow rate		Uncontrolled emissions[c]	
Model plant	Number of units	Type	10^6 m^2/yr	10^6 ft^2/yr	$stdm^3$/s	$stdft^3$/min	Mg/yr	ton/yr	10^6 m^2/yr	10^6 ft^2/yr	$stdm^3$/s	$stdft^3$/min	Mg/yr	ton/yr
1	1	Steam-heated	4.7	51	4.72	10,000	28	31	6.9	74	14.2	30,000	39.3	43.3
2	1	Wood-fired	4.7	51	7.55	11,000	37	41	6.9	74	14.2	30,000	39.3	43.3
3	1	Steam-heated	5.9	64	6.13	13,000	35	38	3.3	36	14.2	30,000	11.0	12.1
4	1	Wood-fired	5.9	64	9.91	14,000	46	51	3.3	36	14.2	30,000	11.0	12.1
5	3	Steam-heated	17.2	185	17.5	37,000	101	111	3.3	36	14.2	30,000	11.0	12.1
6	3	Wood-fired	17.2	185	28.3	39,000	134	148	3.3	36	14.2	30,000	11.0	12.1

[a]Annual operating time is 6,370 h. As final plywood product; a 9.5-mm (0.375-in.)-thickness basis is used.

[b]Particulate condensible organic emissions.

[c]Particulate emissions from product recovery cyclone.

Most of the parameters of Model Plant 4 are identical to those of Model Plant 3 except that Model Plant 4's veneer dryer is a wood-fired unit. Model Plant 4 might be installed at an existing Southern plant that uses direct-fired rather than steam-heated dryers. The parameters describing such an existing plant are assumed to be the same as those given for the existing plant that installs the affected facilities comprising Model Plant 3.

Model Plant 5 is representative of a new Southern plywood plant. A typical new plant heating with steam will contain three dryers having a total of 58 sections. Although the number of drying sections requested by different companies varies, most new plants using steam are expected to be large mills containing 55 to 60 drying sections.[5] New plants of this size will have plywood production rates of approximately 17.2×10^6 m^2/yr, 9.5-mm basis (185×10^6 ft^2/yr, 0.375-in. basis). Some plywood companies plan new plants based on lower production rates; many of these plants are overdesigned for the original, lower production and have rates approaching those given above.[5] Direct-fired dryers require fewer sections than do steam-heated dryers to achieve comparable drying rates. This difference is considered in the presentation of Model Plant 6, which is representative of a new plant that will use wood-fired dryers. Sanders are expected to be installed at new plants where a market exists for sanded plywood. In such cases, however, most of the plant's panels probably will not be sanded, as indicated in Model Plants 5 and 6. Sander parameters are identical to those of Model Plants 3 and 4.

New plywood mills generally are designed to operate continuously 5 days/wk and 50 wk/yr. Veneer dryers, however, are expected to operate additional hours each week and a total of about 6,370 h/yr.[6]

The drying rates of the new veneer dryers in Model Plants 1 through 6 can be achieved only with new jet dryers.[5] Drying rates per section vary among Western plants because several species of wood are used and because Douglas fir heartwood and sapwood have different drying properties. Production rates in Tables 4-1 through 4-7 are intended to represent typical conditions at both Southern and Western

plants. Because sanding rates vary greatly, depending on the product mix of individual plants, it is difficult to establish a typical production rate for sanders. A Western mill, Model Plant 1 or 2, typically will sand both sides of the plywood at a rate of 420 panels/h. Tables 4-1 and 4-2 provide an estimate of 5,500 h/yr sanding time for Model Plants 1 and 2. The sanding rates in Tables 4-3 through 4-6 are based on touch sanding of one side of each panel at a rate of approximately 560 panels/h. At 2,000 h/yr annual operating time, each sander would be operated one shift per day. The sanding rates are believed to be representative of new sanders in Southern plants.

Tables 4-1 through 4-7 give uncontrolled particulate and condensible emissions for the dryers and sanders in the six model plants. Total VOC emissions are probably two or more times condensible emissions but are not presented because total organic emissions factors have not been firmly established. Uncontrolled particulate and condensible emissions from steam-heated dryers are estimated using a 5.9-g/m^2, 9.5-mm basis (1.2-lb/1,000 ft^2, 0.375-in. basis). This average value is obtained from data collected through ODEQ Method 7 (see Section 6) and is based for the most part on Douglas fir. Douglas fir is an important softwood and has an emissions factor between the low values of true firs and the higher values of pines. For wood-fired dryers, baseline emissions are considered equivalent to uncontrolled emissions because certain dryer systems in the South and other areas of the United States may have no emissions control because of relatively low blend box temperatures of approximately 427° C (800° F). Uncontrolled particulate and condensible emissions from direct-fired dryers are estimated at 7.8 g/m^2, 9.5-mm basis (1.6 lb/1,000 ft^2, 0.375-in. basis).[7] Veneer dryers and emissions control systems are discussed in more detail in Chapters 2 and 3.

Emissions for the sanders in Model Plants 1 and 2 are based upon an average cutting depth in Western mills of 0.9 mm (0.035 in.), the combined depth for both sides.[7] An emissions estimate for these plywood sanders is 5.72 g/m^2 (1.17 lb/1,000 ft^2). Emissions for the plywood sanders in Model Plants 3 through 6 are estimated at 3.1 g/m^2

of sanded plywood (0.67 lb/1,000 ft^2). This emissions rate was derived from an average sanding depth of 0.5 mm (0.02 in.), which corresponds to typical sanding of only one side at a Southern mill. Sanderdust emissions are assumed to be 99 percent controlled, which is the control level of a high-efficiency cyclone. This assumption is made because virtually all States require the use of high-efficiency cyclones as a minimum.

4.3 COSTS

Veneer dryer and sander emissions control costs in 1981 dollars are provided for Model Plants 1 through 6. These costs are budget-level estimates, accurate to ±30 percent for the model plants under consideration. Caution should be used when the costs in this section are applied to specific plants. Neither boiler incineration nor wet scrubbing has been used on full-scale Southern veneer dryers, nor have these technologies been tested adequately in the South on pilot-scale units. Emissions from Southern pines may be more difficult to control by scrubbing than emissions from Western woods are. Furthermore, control costs are site specific and vary greatly depending on differences in plant and boiler design, production parameters, wood species, and other factors. Table 4-8 gives the installed capital costs for wet scrubbing and boiler incinerator systems for steam-heated dryers in Model Plants 1, 3, and 5. Boiler incinerator capital costs are more likely to show wide variation from plant to plant. Boiler incineration costs for a new plant (Model Plant 5) in Table 4-8 include approximately $280,000 (1981 dollars) additional costs for the plant boiler, which might have to be oversized or otherwise modified. Boiler incineration costs do not include costs for steam tracing of ducts from dryers to boiler. Steam tracing might be necessary in plants drying pine (e.g., Southern plants) to prevent a fire hazard from the buildup of pitch inside ducts.

Table 4-9 shows the estimated capital costs for wet scrubbing control of direct-fired dryers. Two scrubbing units probably would be required for a system the size of Model Plants 5 and 6. Partial incineration in a furnace or blend box presently is part of all

TABLE 4-8. CAPITAL COSTS OF CONTROL OPTIONS FOR MODEL PLANTS WITH STEAM-HEATED DRYERS

Model plant number	Number of devices controlled	Control option	Installed cost ($1,000's)[a]
		Veneer dryers	
1	1 dryer	Wet scrubbing	210
		Boiler incineration	156
3	1 dryer	Wet scrubbing	235
		Boiler incineration	192
5	3 dryers	Wet scrubbing	480
		Boiler incineration	614
		Plywood sanders	
2,3,5	1 sander	Fabric filtration	125

[a]Mid-1981 costs. Include costs of ducts, miscellaneous equipment, and boiler modification.

TABLE 4-9. CAPITAL COSTS OF CONTROL OPTIONS FOR MODEL PLANTS WITH DIRECT-FIRED DRYERS

Model plant number	Number of devices controlled	Control option	Installed cost ($1,000's)
		Veneer dryers	
2	1 dryer	Wet scrubbing	215
4	1 dryer	Wet scrubbing	240
6	3 dryers	Wet scrubbing	520
		Plywood sanders	
2,4,6	1 sander	Fabric filtration	125

direct-fired systems and, therefore, no costs are assigned to such an arrangement. Installed capital costs of fabric filtration devices for plywood sanders also are given in Tables 4-8 and 4-9. Blowout panels are included in these costs. The need for halon deluge systems, spark detectors, etc., is site specific, depending on insurance requirements. Additional fire prevention systems will increase the capital cost of the fabric filtration device, but the total cost with such systems generally will be less than twice the cost shown.

Annual operating costs for steam-heated dryers, direct-fired dryers, and sanders are presented in Tables 4-10 and 4-11, respectively. Electricity costs are based on a charge of $0.04/kWh. Labor costs are based upon a Bureau of Labor Statistics (Department of Labor) estimate of $10.30/h as the average hourly rate for plywood mill workers.[8] Overhead is based on a 60-percent rate of maintenance and labor costs. Maintenance costs are estimated according to type of control device.

Tables 4-12 and 4-13 provide annualized costs and an estimated cost-effectiveness of pollutant removal. Dryer and sander control costs are included. The assumed particulate/condensible removal efficiency for boiler incineration (90 percent) is based on engineering judgment of a removal efficiency that could be expected in a well-designed and operated system; testing of actual systems has not successfully quantified a removal efficiency. However, use of this removal efficiency leads to a pollutant removal rate (mass basis) that may be conservative (lower than actual) because total organic emissions are believed to be two or more times as high as particulate/condensible organic emissions for most wood species of interest (see Chapter 6).

An overall removal efficiency of 80 percent of particulate and condensible organic emissions is expected from high-efficiency wet scrubbers with mist eliminators used on steam-heated or direct-fired dryers. Partial incineration of the dryer exhaust stream in a hot (650° C or greater) fuel cell can be used in conjunction with a high-efficiency wet scrubber. This type of system is not listed in Table 4-13 because neither the particulate (inorganic)/condensible emissions split nor the removal efficiencies in the fuel cell can be estimated reliably.

TABLE 4-10. ANNUAL OPERATING COSTS OF CONTROL OPTIONS FOR MODEL PLANTS WITH STEAM-HEATED DRYERS

Model plant number	Number of veneer dryer affected facilities	Control option	Annual operating costs ($1,000's)			
			Electricity	Maintenance and labor	Overhead	Total
		Veneer dryers				
1	1	Wet scrubbing	14	35	21	70
		Boiler incineration	9	26	17	52
3	1	Wet scrubbing	18	35	21	74
		Boiler incineration	11	28	18	57
5	3	Wet scrubbing	53	70	42	165
		Boiler incineration	33	49	26	108
		Plywood sanders				
1	-	Fabric filtration	11	25	15	51
3,5	-	Fabric filtration	4	10	6	20

TABLE 4-11. ANNUAL OPERATING COSTS OF CONTROL OPTIONS FOR MODEL PLANTS WITH DIRECT-FIRED DRYERS

Model plant number	Number of veneer dryer affected facilities	Control option	Annual operating costs ($1,000's)			
			Electricity	Maintenance and labor	Overhead	Total
		Veneer dryers				
2	1	Wet scrubbing	23	35	21	79
4	1	Wet scrubbing	30	35	21	86
6	3	Wet scrubbing	85	70	42	197
		Plywood sanders				
2	-	Fabric filtration	11	25	15	51
4,6	-	Fabric filtration	4	10	6	20

TABLE 4-12. ANNUALIZED COSTS OF CONTROL OPTIONS FOR PLANTS WITH STEAM-HEATED DRYERS

Model plant number	Affected facilities	Control option	Assumed control efficiency (%)	Overall effectiveness of pollutant removal[a,b] (Mg/yr)	(ton/yr)	Annualized capital costs[c] ($1,000's)	Direct costs ($1,000's)	Total annualized costs ($1,000's)	Overall cost per unit for pollutant removal[b] ($/Mg)	($/ton)
				Veneer dryers						
1	1 dryer	Wet scrubbing	80	23	25	46	70	116	5,000	4,600
		Boiler incineration	90	25	28	34	52	86	3,400	3,100
3	1 dryer	Wet scrubbing	80	27	30	51	74	125	4,600	4,200
		Boiler incineration	90	31	34	42	57	99	3,200	2,900
5	3 dryers	Wet scrubbing	80	81	89	104	165	269	3,300	3,000
		Boiler incineration	90	91	100	133	108	241	2,600	2,400
				Plywood sanders						
1	1 sander	Fabric filteration	99.9[d]	35	39	27	51	78	2,200	2,000
3,5	1 sander	Fabric filtration	99.9[d]	10	11	27	20	47	4,700	4,300

[a]Condensible organic emissions as measured by ODEQ Method 7.

[b]These values are subject to considerable uncertainty for reasons discussed in the text.

[c]Includes 4 percent for taxes, insurance, and administrative costs. Ten-year life is assumed at 12 percent cost of capital (capital recovery factor equals 0.177).

[d]Overall efficiency of cyclones and fabric filters.

TABLE 4-13. ANNUALIZED COSTS OF CONTROL OPTIONS FOR PLANTS WITH DIRECT-FIRED DRYERS

Model plant number	Number of veneer dryer affected facilities	Control option	Assumed control efficiency (%)	Overall effectiveness of pollutant removal[a,b] (Mg/yr)	(ton/yr)	Annualized capital costs[b] ($1,000's)	Direct costs ($1,000's)	Total annualized costs ($,1000's)	Overall cost per unit for pollutant removal[b] ($/Mg)	($/ton)
				Veneer dryers						
2	1	Wet scrubbing	80	30	33	47	79	126	4,200	3,800
4	1	Wet scrubbing	80	37	41	52	86	138	3,700	3,400
6	3	Wet scrubbing	80	107	118	113	197	310	2,900	2,600
				Plywood sanders						
2	-	Fabric filtration	99.9[d]	35	39	27	51	78	2,200	2,000
4,6	-	Fabric filtration	99.9[d]	10	11	27	20	47	4,700	4,300

[a]Condensible organic emissions as measured by ODEQ Method 7.

[b]These values are subject to considerable uncertainty for reasons discussed in the text.

[c]Includes 4 percent for taxes, insurance, and administrative costs. Ten-year life is assumed at 12 percent cost of capital (capital recovery factor equals 0.177).

[d]Overall efficiency of cyclones and fabric filters.

Chapter 3 discussed a hypothetical system that would incinerate the entire exhaust stream from a direct-fired dryer. This system is not included in the cost tables because of uncertainty about the fate of inorganic particulates in the system and the costs associated with research and development and furnace or burner modification needed.

Overall costs of pollutant removal in Tables 4-12 and 4-13 also depend on the emissions factor used in the calculations. Emissions factors vary greatly with species, but most testing has been done on Douglas fir plywood. NCASI staff measurements of total organic emissions from Southern pine veneer dryers[9] showed average Method 25 emissions rates of 13.7 g/m^2 as C_1, 9.5-mm basis (2.8 lb/1,000 ft^2, 0.375-in. basis) on fresh cut veneer and 10.7 g/m^2 as C_1, 9.5-mm basis (2.2 lb/1,000 ft^2, 0.375-in. basis) on veneer that had been cut 24 to 48 hours before drying. These limited data indicate that Southern pine species may emit two or more times the 5.9 g/m^2, 9.5-mm basis (1.2 lb/1,000 ft^2, 0.375-in. basis) assumed in this report, mostly as noncondensible organics. The boiler incineration costs per unit pollutant removed in the tables may be conservative (higher than actual) by a factor of two or more for Southern and Western pines and may be conservative even for Douglas firs, because considerable fugitive emissions and noncondensible stack emissions were not accounted for in previous tests of this species.

Relative capital and operating costs of emissions control compared to entire plant costs can be determined from information in Tables 4-14 and 4-15. Complete plywood plant capital costs are presented in Table 4-14. Model Plants 1 through 4 are existing mills that could be replaced today for the costs presented, for the given total production. The complete plywood mill would be expected to have annualized direct costs shown in Table 4-15. The capital costs for control equipment may be up to about 23 percent of capital costs of the veneer dryer and 21 percent of costs of the plywood sander. Capital costs for veneer dryer emission control equipment are approximately 1 to 2 percent of those costs for complete plywood plants; capital costs of sander emission control systems are less than 1 percent of complete plant

TABLE 4-14. CAPITAL COSTS OF COMPLETE PLYWOOD PLANTS[10]

Model plant number	New or existing plant	Number of new veneer dryers	Total plant production ($m^2 \times 10^6$/yr)	Capital costs of new model veneer dryer(s) ($1,000's)	Capital cost of plywood sander ($1,000's)	Capital cost of new plywood plant or replacement cost of existing plant[a] ($1,000's)
1	E	1	7.4	1,120	600	17,450
2	E	1	7.4	1,080	600	17,000
3	E	1	13.9	1,400	600	31,700
4	E	1	13.9	1,350	600	30,900
5	N	3	17.2	4,060	600	41,100
6	N	3	17.2	3,920	600	39,400

N = new plant.

E = existing plant.

[a]Includes the cost of new dryer(s) and sander.

TABLE 4-15. ANNUALIZED DIRECT COSTS OF COMPLETE PLYWOOD PLANTS[10]
($1,000's)

Model plant number	Utilities	Labor	Overhead	Raw materials--logs	Other materials and supplies	Total
1	390	3,700	2,200	6,000	2,200	14,490
2	390	3,700	2,200	6,000	2,200	14,490
3	650	4,800	2,900	10,500	4,000	18,050
4	650	4,800	2,900	10,500	4,000	18,050
5	860	6,300	3,800	14,000	5,00	29,960
6	860	6,300	3,800	14,000	5,000	29,960

costs. Total annualized costs of veneer dryer or sander emission control are less than 1 percent of total annualized plant costs in each case.

4.4 REFERENCES

1. Telecon. Oehling, N., Coe Manufacturing Company, with Chessin, R. L., Research Triangle Institute. October 8, 1980. New veneer dryers.

2. Letter from McMahon, I. J., Coe Manufacturing Company, to Chessin, R. L., Research Triangle Institute. October 29, 1980. Followup to telephone conversation of October 8, 1980, with N. Oehling.

3. Telecon. Erb, C., American Plywood Association, with McCarthy, J. M., Research Triangle Institute. March 19, 1981. New veneer dryers.

4. Telecon. Johnson, A. T., Georgia-Pacific Corporation, with McCarthy, J. M., Research Triangle Institute. December 23, 1980. Plywood sanders.

5. Telecon. McMahon, I. J., Coe Manufacturing Company, with McCarthy, J. M., Research Triangle Institute. November 20, 1980. Sizes and production rates of new plywood plants.

6. Letter from Erb, C., American Plywood Association, to McCarthy, J. M., Research Triangle Institute. February 2, 1982. Production rates of plywood mills.

7. Letter and attachment from Emery, J. A., American Plywood Association, to McCarthy, J. M., Research Triangle Institute. December 16, 1981. Comments on draft chapters.

8. Bureau of Labor Statistics. Employment and Earnings. August 1981.

9. Letter and attachment from Blosser, R. O., National Council of the Paper Industry for Air and Stream Improvement, Inc., to Farmer, J., U.S. Environmental Protection Agency. January 19, 1983. Comments on draft Control Techniques Document.

10. Letter and attachments from Hobart, J., J. E. Sirrine Company, to McCarthy, J. M., Research Triangle Institute. July 22, 1981. Costs of plywood mills.

5. ENVIRONMENTAL IMPACT

The following subsections discuss the air, water, solid waste, and energy impacts of various types and levels of emission control. The bases for estimating environmental impacts are the model plant parameters, as discussed in Chapter 4, and the control efficiencies that are presented in Chapter 3.

5.1 AIR POLLUTION IMPACT

The impact on emissions of particulate and condensible organic material (as defined by ODEQ Method 7) that results from various control options is estimated. Actual emissions from veneer dryers may be higher than those estimated in the following discussion because fugitive emissions are not included. All dryers have fugitive emissions, but those emissions have not been defined quantitatively. All emission figures used in this chapter represent vented or controllable organic compounds.

Table 5-1 outlines the control options and provides estimates of emission reductions for each of the six model plants. Separate results are presented for steam-heated and direct-fired dryers because separate control technologies are required to reduce emissions from the two types of dryers. Steam-heated dryers are compatible with incineration of the exhaust stream in the plant boiler. Direct-fired dryers can recycle a portion of their exhaust stream to a furnace or blend box to remove organic compounds from that stream. The remaining exhaust gases can be controlled most efficiently by a wet scrubber. These estimates may be subject to considerable error because removal efficiencies and emission factors are not firmly established.

Secondary environmental impacts are defined as impacts that are not normally associated with an uncontrolled facility but that result

TABLE 5-1. ESTIMATED AIR POLLUTION IMPACTS OF CONTROL OPTIONS FOR MODEL PLANTS

Model plant number[c]	Affected facilities	Annual emissions[a] under each control option[b] (Mg/yr [ton/yr]) I		II		III	
Steam-heated dryers		Baseline		80% removal[d]		90% removal[d]	
1	1 dryer	28	(31)	5.6	(6.2)	2.8	(3.1)
3	1 dryer	35	(38)	7.0	(7.6)	3.5	(3.8)
5	3 dryers	101	(111)	20.2	(22.2)	10.1	(11.1)
Direct-fired dryers		Baseline		80% removal[d]			
2	1 dryer	37	(41)	7.4	(8.2)		
4	1 dryer	46	(51)	9.2	(10.2)		
6	3 dryers	134	(148)	26.8	(29.6)		
Plywood sanders		Baseline		99.9% removal[d]			
1,2	1 sander	39.3	(43.3)	3.9	(4.3)		
3-6	1 sander	11.0	(12.1)	1.2	(1.3)		

[a]For veneer dryers--emissions are estimates of particulate and condensible organic compounds (ODEQ 7); for sanders, emissions are estimates of particulate.

[b]Control Option I--for veneer dryers, no removal equipment;
--for sanders, high-efficiency cyclonic collectors.
Control Option II--for steam-heated dryer, high-efficiency wet scrubbers;
--for direct-fired dryer, high-temperature blend box with wet scrubbing.
--for sanders, high-efficiency cyclonic collectors and fabric filtration.
Control Option III--for steam-heated dryers, boiler incineration.

[c]Model plants consist of two types of processing units: veneer dryers and plywood sanders. Each of these processes has separate control options.

[d]Removal efficiencies have not been firmly established. The estimates may be subject to considerable error.

after addition of pollution control equipment. No measurable secondary impact to the air is expected from any of the control options. Control Option II for both steam-heated dryers and for direct-fired dryers will add moisture to the air because they include wet scrubbing of the exhaust stream. Control Option III involves incineration, which adds carbon dioxide and carbon monoxide to the atmosphere. However, the additional carbon dioxide and carbon monoxide do not add significantly to the amount of these compounds that otherwise would be emitted by the boiler. All steam-heated dryers are expected to have a corresponding boiler at the plant, and from engineering calculations, dryer exhausts and boiler air requirements generally are compatible.

5.2 WATER POLLUTION IMPACT

EPA regulations require softwood plywood plants to have zero-discharge systems.[1] Wet scrubbers separate collected pitch and water and add water as needed to replace water lost to the atmosphere. Collected pitch is burned in a boiler or landfilled. To operate efficiently, wet scrubbers may treat and discharge their recirculated water after an excess amount of pitch has accumulated in the water supply, but this practice currently is not common in the plywood industry. If necessary, this recirculated water may be treated in the existing wastewater treatment system. Because of existing regulations, the potential impact of the regulatory alternatives requiring wet scrubbing is minimal. Boilers and wood-fired fuel cells used as incinerators have no wastewater discharges that can be attributed to their use as veneer dryer emission control devices.

5.3 SOLID WASTE

The only regulatory alternatives that result in accumulated solid waste are those requiring wet scrubbing devices. In such devices, the heavier organics generally are removed from recirculated water as a wet sludge. This sludge may contain up to 13 kg/h (29 lb/h) of organic material at a large plywood plant such as Model Plant 5. This relatively small amount of material can be destroyed by its injection into the boiler at a steam-heated plant, although direct-fired plants may have to dispose of the sludge in a landfill or in the plant's wastewater

treatment system. Sander dust collected from plywood sanders is not considered solid waste. This material is used as fuel in almost all plants.

5.4 ENERGY IMPACT

Most plywood plants use nonfossil (wood) fuel as the main source of heat energy. Over 50 percent, by weight, of a plywood plant's raw materials (logs) are not suitable for producing veneer. A portion of this material is used as fuel for boilers and furnaces. Therefore, many existing plywood mills and virtually all new mills are self-sufficient in fuel energy. Notable exceptions are existing veneer plants that purchase peeled veneer and other plants using gas-fired dryers.

Fuel consumption of the steam-heated model plants (dryers) is estimated based on a steam requirement of 9,530 kg steam/1,000 m^2, 9.5-mm basis (1,950 lb steam/1,000 ft^2, 0.375-in. basis). Fuel consumption by the direct-fired model plants (dryers) is assumed to be approximately the same as that of the steam-heated plants of corresponding production rates. Annual fuel consumption estimates are: Model Plants 1 and 2, 90 TJ or 85×10^9 Btu; Model Plants 3 and 4, 110 TJ or 100×10^9 Btu; and Model Plants 5 and 6, 320 TJ or 300×10^9 Btu.

While new plants will be built, most of this new production will be at the expense of existing production in other geographic areas. National fuel energy demand for this industry will not change significantly due to growth. National fuel energy demand essentially will not change due to increased use of control devices since none of the control options for dryers and sanders require additional fuel.

Plywood mills consume electrical energy from outside sources. Table 5-2 gives estimates of electrical energy use of the six model plants. The electrical energy impact of the control options is relatively insignificant in each case. For example, a large plywood plant producing 17.2×10^6 m^2/yr, 9.5-mm basis (185×10^6 ft^2/yr, 0.375-in. basis), might consume 72 TJ/yr (20×10^6 kWh/yr), while the additional electrical energy required for the fans associated with wet scrubbing of all three dryers would be approximately 2.6 TJ/yr (0.72×10^6 kWh/yr).

TABLE 5-2. ESTIMATES OF ELECTRICAL ENERGY CONSUMPTION OF MODEL PLANTS[a]

Model plant number	Affected facilities	Energy consumption by control option (TJ/yr)[b]		
		I	II	III
Steam-heated dryers		No emission control	80% removal	90% removal
1	1 dryer	9	10	10
3	1 dryer	11	12	12
5	3 dryers	31	34	34
Direct-fired dryers		No emission control	80% removal	
2	1 dryer	7	8	
4	1 dryer	9	10	
6	3 dryers	26	29	
Plywood sanders		Baseline	99.9% removal	
1-6	1 sander	1.0	1.4	

[a]Model plants consist of two types of processing units: veneer dryers and plywood sanders. Each of these facilities has separate regulatory alternatives.

[b]One TJ (terajoule) equals 10^9 J.

During the next decade, a new trend toward cogeneration of electricity at large new mills may develop. If this trend occurs, the increase in electrical energy consumption from fossil-fuel burning, nuclear, or hydroelectric power plants may be less than that indicated above.

5.5 REFERENCES

1. Telecon. Williams, Richard, Effluent Guidelines Division, U.S. Environmental Protection Agency, with McCarthy, J. M., Research Triangle Institute. May 19, 1980. Water discharge regulations.

6. TEST METHODS AND TEST RESULTS

This section discusses test methods that have been used to measure emissions from plywood veneer dryers and plywood sanders and presents the results of selected source tests. The choice of test method is important when emissions from veneer dryers are evaluated because of the types of compounds emitted. As discussed in Chapter 2, veneer dryer emissions consist of a particulate fraction (mainly wood fines and ash), a condensible fraction (mainly compounds of 15 or more carbon atoms), and a noncondensible fraction (mainly terpenes of 10 carbon atoms). The choice of condenser temperature in the sampling train determines where the condensible/noncondensible split occurs among the various organic compounds entering the train. Different tests of emissions from the same wood species have shown widely varying condensible to noncondensible ratios, probably for this reason.[1] The mass fractions of condensible and noncondensible emissions also differ among wood species; e.g., some tests have shown that emissions from Loblolly pine dryers contain more than 85 percent terpenes, while some tests have shown that emissions from White fir dryers contain less than 20 percent terpenes.[1] This situation is further complicated by the need for isokinetic sampling after wet scrubbers because some of these organic compounds condense in such control devices. A combination of test methods is required to obtain separate measurements of the noncondensible and condensible materials.

6.1 VENEER DRYER TEST METHODS

6.1.1 Oregon Department of Environmental Quality (ODEQ) Method 7

ODEQ Method 7 is essentially a modified U.S. Environmental Protection Agency (EPA) Method 5.[2] The sampling train is shown in Figure 6-1.

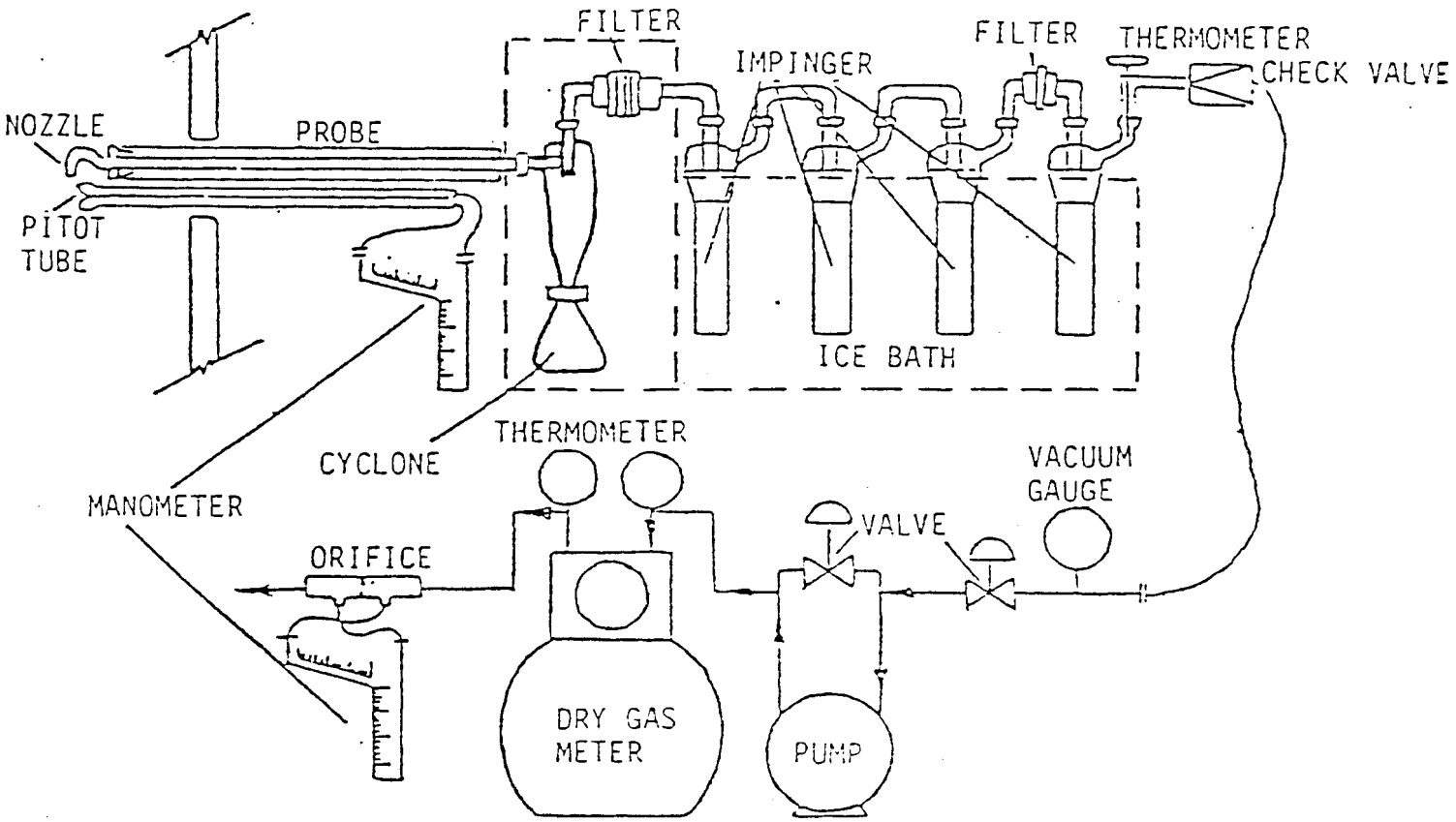

Figure 6-1. Oregon Department of Environmental Quality Method 7 sampling train.[2]

The major modification to the Method 5 sampling train is the addition of an unheated backup filter between the third and fourth impingers whose purpose is to collect organic aerosols not collected within the impingers. An optional modification is the exclusion of the filter normally located in the heated chamber preceding the impingers. However, when the filter is used, the glass cyclone also is included, the purpose of the combination being to eliminate wood fiber or ash particulate matter.

Sampling is performed in accordance with EPA Method 5 procedures. The sample is recovered from the impingers when sample-exposed surfaces and the filter support frit(s) are rinsed with acetone, although a water rinse is sometimes used also. Each filter is removed and placed in individual petri dishes. A chloroform-ethyl ether procedure identical to that originally proposed for Method 5 is used to extract the condensible organics from the impinger water samples.[3] The extract and the glassware acetone rinses are evaporated separately at 21° C (70° F) or less, desiccated for 24 hours, and weighed. Following organic extraction, the impinger water is evaporated at 104° C (220° F), desiccated for 24 hours, and weighed. The backup filter and fourth impinger's silica gel also are weighed. The amount of condensible organics is determined when residuals are totaled. Emission concentrations are determined according to EPA Method 5 calculation procedures.

The greatest potential problem with ODEQ Method 7 is sample loss, which is most likely to occur during sample transfer, extraction, and extraction solvent evaporation. Even the high-molecular-weight organics have a finite vapor pressure at normal room temperatures, so some loss may occur. Some of the monoterpenes are collected within the impingers and on the filter at typical sampling train temperatures. However, they are lost during evaporation procedures.

6.1.2 Washington State University (WSU) Method

The WSU Method was developed in the early 1970's (sampling began in July 1970) under joint sponsorship of the Plywood Research Foundation and EPA. Figure 6-2 depicts the sampling train. The sample probe is an unheated glass tube with a fritted glass filter fitted in the

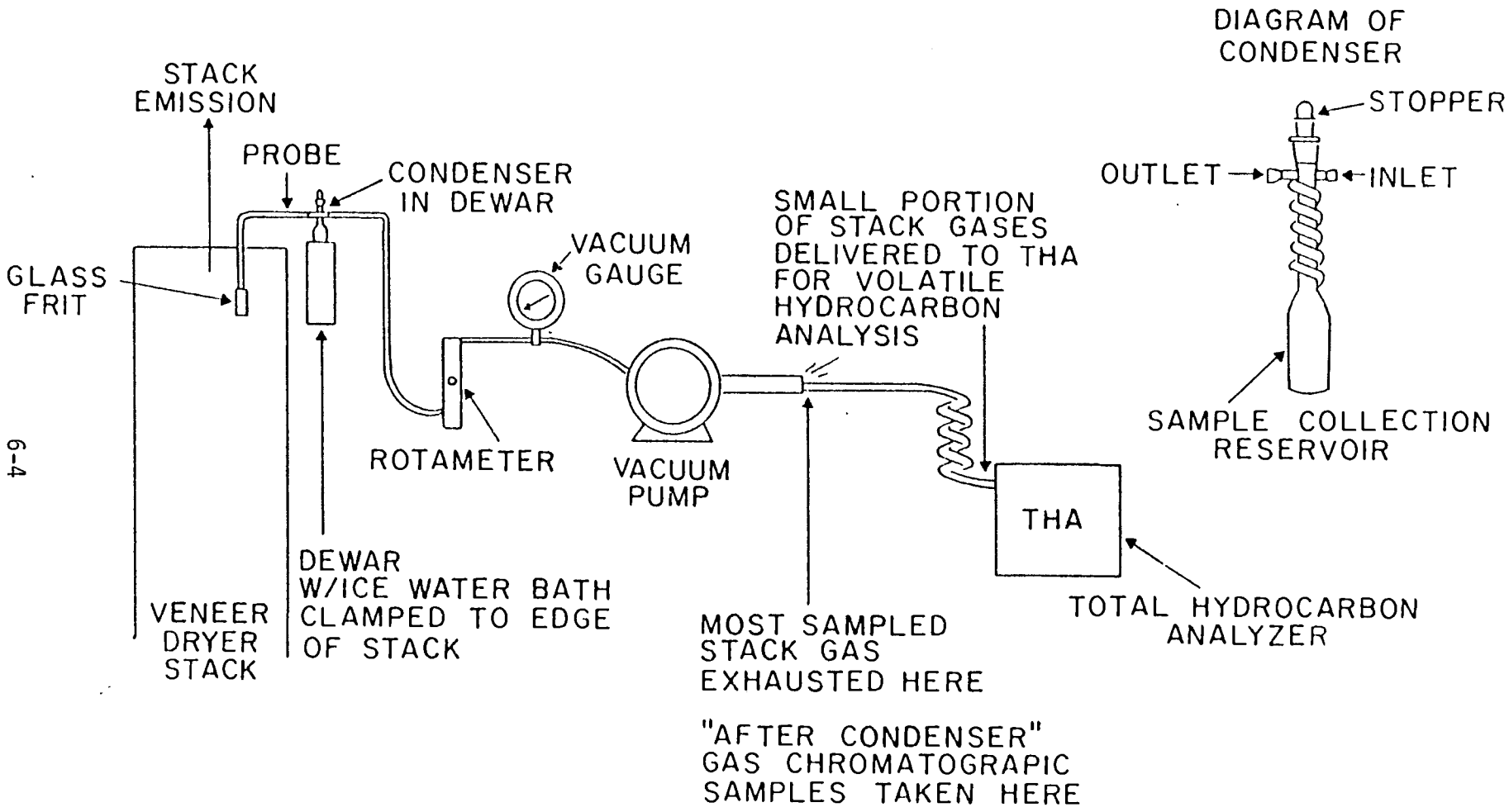

Figure 6-2. Washington State University (1972) sampling train.[4]

upstream end to preclude wood fibers entering the sample stream. It is connected to a spiral condenser maintained at 21° to 27° C (70° to 80° F) in an ice bath. The condenser design provides lengthy contact between the sample stream and the cold surfaces and has a large reservoir to collect the condensed organics and water vapor. The exhaust stream temperature from the condenser is approximately 21° C (70° F). Eventually, a filter was located at the condenser exit to collect any escaping aerosols. A vacuum pump, rotameter, vacuum gauge, and total hydrocarbon analyzer (THA) complete the sampling train. The THA is used to measure the volatile (noncondensible) organic fraction.

Sampling is performed anisokinetically at a single point within the stack. Following sampling, collected organics are transferred from the condenser into sample bottles and acetone is used as a rinse agent. The probe also is rinsed with acetone and the rinse combined with that from the condenser. In the laboratory, a Rinco evaporating apparatus is used to evaporate the water and acetone from the condensed organic fraction. The apparatus' rotating flask is maintained at 40° ±5° C (104° ± 9° F) in a water bath heated by an electrical hotplate. The pressure within the flask is held at 91 to 95 kPa (27 to 28 in. Hg) vacuum until the water and acetone have evaporated, leaving a pitchy, resinous, varnish-like residue. Total residue weight is determined after a 3-hour stabilization period. This weight is used in conjunction with rotameter readings, sample times, and stack volumetric flow data to determine condensible organic emissions.

The THA measurements of total organic concentration data in terms of equivalent parts per million, volume basis hexane are recorded during the test. A time-weighted average concentration is determined and the volatile emission rate calculated with stack flow parameters.

Comparative analytical tests of the WSU Method and an ODEQ test method (an experimental procedure that formed the basis for ODEQ Method 7) indicated a loss of condensible material during the Rinco apparatus evaporation procedure of the former. The evaporating temperature--40° ± 5° C (104° ± 9° F)--coupled with the low pressure--91

to 95 kPa (27 to 28 in. Hg)--vacuum apparently causes volatilization of some of the heavier organics and any of the lighter monoterpenes in the condensate. Volatilization of the monoterpenes would be expected based on vapor pressure curves for these compounds.[2] These vapor pressure data tend to indicate that, at normal stack temperatures of 163° C (325° F) and higher, the monoterpenes will exist in a vapor state. However, at condenser (or impinger) temperatures, the vapor pressures of the monoterpenes are reduced significantly. Therefore, a significant fraction should be condensed and collected. Heating the samples increases the vapor pressure, which causes the accompanying loss of volatilized fraction. The loss by evaporation is intensified by the apparatus' low absolute pressure. The driving force for attaining equilibrium cannot be achieved. A similar situation exists with ODEQ Method 7, but the loss should not be as great because evaporation is performed at ambient temperature and pressure. Following initial stack testing according to the WSU Method, correction factors were developed (based on limited data) to account for loss of condensed material. The location of the THA also may have been a source of error in the WSU testing in the early 1970's. Adsorption losses may have occurred between the condenser and the analyzer.[2]

6.1.3 EPA Method 25

EPA Method 25--Determination of Total Gaseous Nonmethane Organic Emissions as Carbon: Manual Sampling and Analysis Procedure--is essentially an extension of the Los Angeles Air Pollution Control District (LAAPCD) Total Combustion (or Carbon) Analysis technique developed to determine compliance with the District's Rule 66 organic-solvent regulation.

A sample is withdrawn anisokinetically from the emission gas stream through a chilled condensate zone by means of an evacuated gas-sampling tank.[5] Figure 6-3 shows an EPA Method 25 sampling train modified for sampling veneer dryer emissions. The water-ice bath condenser, not a standard component of the Method 25 train, was added by EPA to prevent ice crystals from blocking the dry ice condenser. Analytical results obtained from independent analyses of the condensate

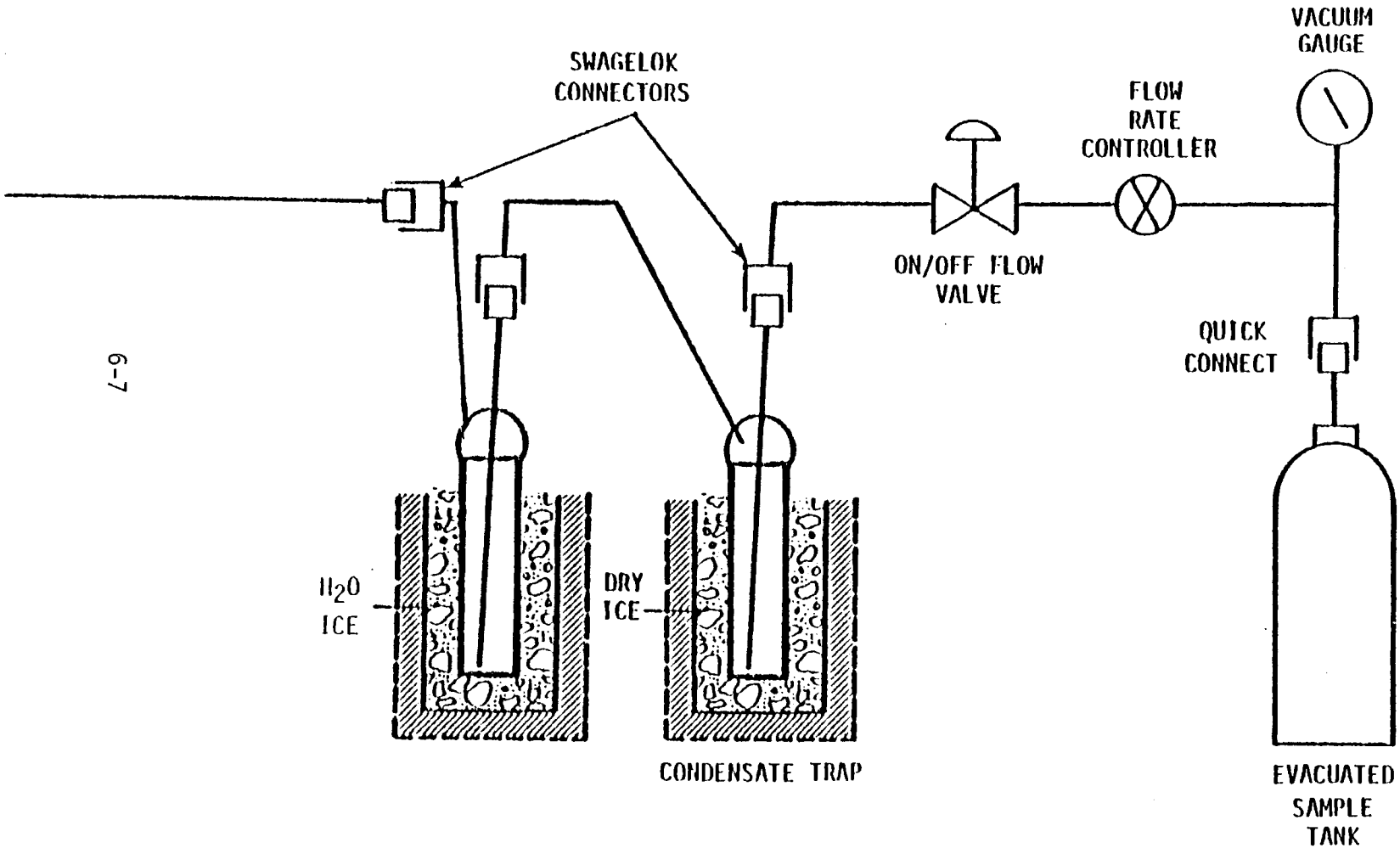

Figure 6-3. Modified EPA Method 25 sampling train.[7]

traps and evacuated tank fractions are combined to determine total gaseous nonmethane organics. After sampling, the organic contents of the condensate trap are catalytically oxidized to carbon dioxide (CO_2), which is collected quantitatively in an intermediate tank. An aliquot is then taken, reduced to methane, and measured by a flame ionization detector (FID). A portion of the sample collected in the evacuated sample tank is injected into a gas chromatographic column to separate the nonmethane organics from the inherent carbon dioxide, carbon monoxide, and methane. The nonmethane fraction after elution is oxidized catalytically to CO_2, reduced to methane, and measured by FID. Figure 6-4 is a simplified schematic of the analysis procedure.

6.1.4 Combination EPA Method 5X and EPA Method 25

During two source tests, EPA has used a sampling train consisting of EPA Method 5X (modified EPA Method 5) and one or more EPA Method 25 trains.[6 7] Figure 6-5 is a schematic of this sampling system. The Method 25 trains sample a slip stream from behind the initial Method 5X filter. Thus, both Method 5X and Method 25 samples are taken isokinetically. EPA Method 5X is similar to EPA Method 5 and ODEQ Method 7, the major exception being that the probe and front filter are maintained at 177° ± 14° C (350° ± 25° F). This temperature is approximately the average veneer dryer exhaust temperature; the filter at this temperature excludes from the Method 25 samples only organic matter that condenses at or above 177° C (350° F). Standard Method 25 and ODEQ 7 analytical procedures are used on the samples collected.

This sampling and analysis system provides estimates of both particulate plus condensible organic emissions (Method 5X) and total organic emissions (Method 25). These results are not comparable because Method 25 measurements include the noncondensible material while Method 5X does not. Method 5X has the same potential problem with loss of sample during analysis discussed for ODEQ Method 7.

6.2 PLYWOOD SANDER TEST METHOD

EPA Method 5 is the test method applicable to sanders. Few sanderdust control systems have been tested to show removal efficiency.

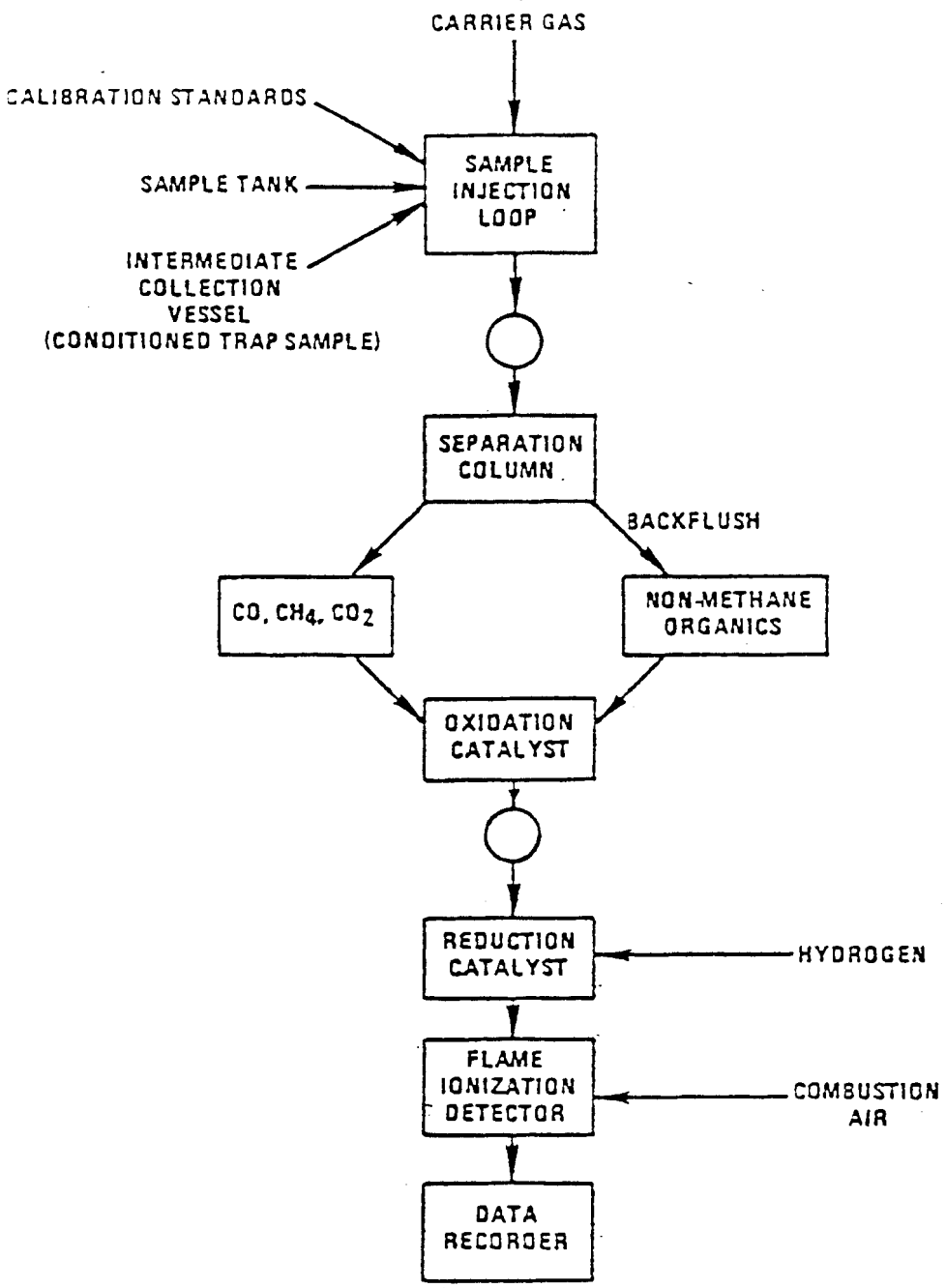

Figure 6-4. Simplified schematic of nonmethane organic analyzer (Method 25).[5]

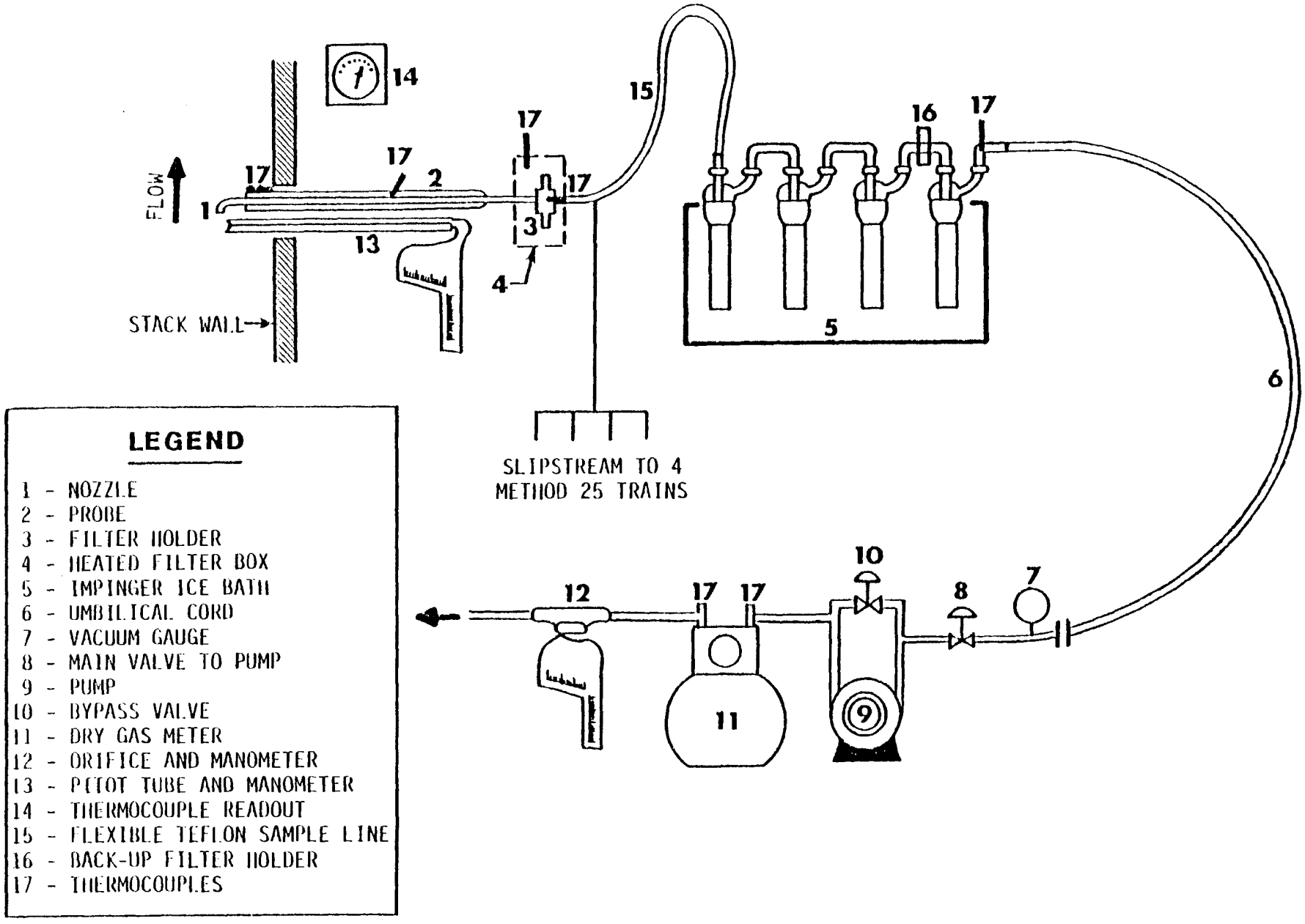

Figure 6-5. Modified EPA Method 5X/25 sampling train.[7]

Particulate loads from sanders often are calculated from the plywood feed rate and the depth of cut due to sanding. Emission rates after control devices can then be measured with EPA Method 5.

6.3 RESULTS OF EMISSION TESTING

6.3.1 Veneer Dryers

6.3.1.1 Uncontrolled Emissions. Table 6-1 presents the results of tests of uncontrolled veneer dryers drying Douglas fir. The data represent particulate and condensible organic emissions as measured by ODEQ Method 7 or EPA Method 5X. The wide variation in emissions even for the same wood species illustrates the difficulty in defining emissions factors for plywood veneer dryers. Some of this variation is probably due to differences in the extent of unmeasured, fugitive emissions among the dryers tested. The average emission rate for the seven tests of steam-heated dryers is 5.9 g/m^2, 9.5-mm basis (1.2 $lb/1,000\ ft^2$, 0.375-in. basis). The average emission rate for the seven tests of gas-fired dryers is 5.4 g/m^2, 9.5-mm basis (1.1 $lb/1,000\ ft^2$, 0.375-in. basis); these tests also show wide variation in emission factors.

The average emission rate of particulate and condensible matter for six tests of wood-fired veneer dryers in Table 6-1 is 5.13 g/m^2, 9.5-mm basis (1.05 $lb/1,000\ ft^2$, 0.375-in. basis). Operating conditions for these systems are not known, and this average may not be typical of the industry. The American Plywood Association estimates that a more reasonable average emission factor is 7.8 g/m^2, 9.5-mm basis (1.6 $lb/1,000\ ft^2$, 0.375-in. basis).[10]

EPA measured uncontrolled organic emissions by using EPA Method 25 at two mills drying predominantly Douglas fir. The sampling train was as illustrated in Figure 6-5. Results of these tests are discussed in Subsection 6.3.1.2. Uncontrolled emissions for these two tests averaged 4.3 and 5.4 g/m^2 as C_1, 9.5-mm basis (0.87 and 1.1 $lb/1,000\ ft^2$ as C_1, 0.375-in. basis).

WSU conducted extensive testing of uncontrolled veneer dryers in the early 1970's.[4] Problems in the WSU test method were discovered near the end of the testing program. Correction factors were

TABLE 6-1. EMISSION TESTS OF UNCONTROLLED VENEER DRYERS DRYING DOUGLAS FIRS[6 7 8 9]

No. of dryers	Heat source	Exhaust flow rate ($stdm^3/s$)	Exhaust flow rate ($stdft^3/min$)	Stack temperature (°C)	Veneer production[a] (1,000 m^2/h)	Veneer production[a] (1,000 ft^2/h)	Particulate condensible organic emissions: Concentration ($g/stdm^3$ dry)	Particulate condensible organic emissions: Concentration ($gr/stdft^3$ dry)	Particulate condensible organic emissions: Rate[a] (g/m^2)	Particulate condensible organic emissions: Rate[a] ($lb/1,000\ ft^2$)
1	Steam	6.28	13,300	149	0.39	4.2	0.105	0.046	6.11	1.25
1	Steam	3.35	7,100	94	0.31	3.4	0.04	0.02	1.27	0.26
1	Steam	2.41	5,100	176	0.34	3.7	0.39	0.17	9.88	2.02
1	Steam	3.35	7,100	182	0.22	2.7	0.07	0.03	3.28	0.67
1	Steam	8.12	17,200	190	0.19	2.1	0.11	0.05	13.89	2.84
4	Steam	5.80	12,300	154	3.22	34.7	0.375	0.164	2.57	0.525
3	Steam	11.5	24,300	-	2.63	28.3	0.368	0.161	5.82	1.19
1	Natural gas	7.08	15,000	158	0.59	6.4	0.06	0.026	2.54	0.52
1	Natural gas	9.01	19,100	160	0.67	7.2	0.07	0.029	3.18	0.65
1	Natural gas	7.32	15,500	160	0.59	6.4	0.23	0.101	10.27	2.1
1	Natural gas	9.47	20,060	152	0.67	7.2	0.15	0.068	7.82	1.6
1	Natural gas	2.12	4,500	183	0.66	7.1	0.39	0.173	4.35	0.89
1	Natural gas	4.06	8,600	176	0.53	5.7	0.27	0.12	7.33	1.5
1	Natural gas	3.63	7,700	179	0.94	10.1	0.09	0.039	1.61	0.33
1	Wood	14.4	30,400	129	1.58	17.0	0.17	0.075	5.48	1.12
1	Wood	15.8	33,500	121	1.38	14.9	0.05	0.024	2.25	0.46
1	Wood	2.45	5,200	163	0.56	6.0	0.38	0.167	6.11	1.25
-	Wood	5.10	10,800	-	1.30	14.0	0.522	0.228	7.38	1.51
-	Wood	4.32	9,150	-	1.18	12.7	0.247	0.108	3.3	0.67

[a]9.5-mm (0.375-in.) basis.

established for certain wood species based on limited comparisons to ODEQ test results (tests performed with a preliminary version of Method 7). While wide variations were observed among dryers tested, average particulate and condensible organic emission rates for Douglas fir and Ponderosa pine are estimated at 4 and 10 g/m^2, 9.5-mm basis (0.9 and 2.1 $lb/1,000\ ft^2$, 0.375-in. basis). Noncondensible organic emissions from these two species, as measured by THA, are estimated at 0.3 and 1.5 g/m^2, 9.5-mm basis (0.07 and 0.3 $lb/1,000\ ft^2$, 0.375-in. basis); noncondensible organic emissions from Southern pine (species unknown) are estimated from the early WSU data at 1.5 g/m^2, 9.5-mm basis (0.3 lb/ft^2, 0.375-in. basis). As previously discussed, these data may be in error because of sample loss in the train.

In 1981, a WSU team again sampled a series of uncontrolled veneer dryers using a similar collection technique for condensible emissions, but analysis was by gas chromatography/mass spectroscopy. Stainless steel collection cannisters and analysis by gas chromatography were used for the condensible fraction. Table 6-2 summarizes data on the split between terpene emissions and other uncontrolled stack emissions collected during this study. The noncondensible organic fraction exceeds the condensible fraction for most stacks in Table 6-2, in contrast to results obtained during the earlier WSU studies. Noncondensible organic emissions from Douglas fir and Loblolly pine, for example, compose more than 80 percent of total emissions from these woods in Table 6-2. Veneer production rates are not available for the 1981 WSU study, so emission factors cannot be calculated from these data. Results suggest that earlier total emission rate estimates by other methods may be low.

The National Council of the Paper Industry for Air and Stream Improvement, Inc. (NCASI) recently has conducted EPA Method 25 emissions tests on a number of uncontrolled veneer dryers. Results will be published in a technical bulletin, which is presently in draft form. Table 6-3 summarizes the preliminary test results. Emissions factors reported are 1-hour average values when the dryer was operating at full capacity on the species specified and are not adjusted for the

TABLE 6-2. DISTRIBUTION BETWEEN TERPENE EMISSIONS AND OTHER EMISSIONS[1]

Wood	Stacks sampled	Minimum[a] terpenes (%)	Maximum[a] nonterpene (%)	Total emissions measured[a,b] (kg/h)	(lb/h)
Douglas fir	1 of 5 (middle)	82	18	0.710	1.56
White fir	1 of 6 (middle)	16	82	0.090	0.199
White fir	(2 of 4, 1 of 2 green end and 1 of 2 dry end)	41[c]	59[d]	0.037	0.082
Larch	2 of 5 (green and dry)	93	7	6.94	15.3
Larch	1 of 6 (middle)	48	52	1.46	3.21
Loblolly pine	3 of 3	86[c]	14[d]	5.63	12.4
Loblolly pine	2 of 5 (middle and dry)	93[c]	17[d]	1.98	4.37
Short leaf pine	2 of 3 (green and dry)	56[c]	44[d]	2.72	6.00
Short leaf pine	2 of 3 (green and dry)	62[c]	38[d]	1.27	2.80
Slash pine	3 of 3	42[c]	58[d]	2.38	5.25

[a]Calculated from summation in lb/h of only stacks sampled for each dryer.

[b]These are total dryer emissions only if all dryer stacks were sampled.

[c]Not including alpha-pinene observed in the condensate or filtrate samples.

[d]Including alpha-pinene observed in the condensate and filtrate samples.

TABLE 6-3. TOTAL ORGANIC EMISSIONS TESTS OF UNCONTROLLED VENEER DRYERS[11]

Heat source	Species	Mill	Exhaust temperature (°C)	Exhaust rate		Organic emissions (as CH_4)	
				dstdm³/ 1,000 m²	dstdft³/ 1,000 ft²	g/m²	lb/1,000 ft²
Steam	Douglas fir sap	A	182	21,900	71,700	10.3	2.1
	Douglas fir heart	A	177	11,000	36,000	5.4	1.1
		E	154	16,900	55,500	5.9	1.2
		E	154	17,400	57,200	5.4	1.1
	Douglas fir mixed	D	151	7,400	24,200	4.9	1.0
		D	157	7,700	25,100	5.9	1.2
		D	154	7,800	25,700	5.9	1.2
		F	157	13,800	45,200	4.9	1.0
		F	160	16,300	53,500	7.8	1.6
		F	161	17,500	57,500	8.3	1.7
	Douglas fir & hemlock	E	157	14,700	48,200	4.4	0.9
	Lodgepole pine	A	178	16,800	55,000	9.8	2.0
	Loblolly & short-leaf pine	G	163	16,900	55,400	16.6	3.4
		G	163	16,400	53,800	18.6	3.8
		J	158	3,700	12,200	13.2	2.7
		J	159	4,800	15,600	15.1	3.1
	Douglas fir redry	A	172	9,700	31,800	0.1	0.03
Wood-residue direct-fired							
	Douglas fir sap	M	163	42,400	139,000	19.0	3.9
	Douglas fir heart	M	163	25,300	83,000	11.7	2.4
	Douglas & white fir	L	152	20,800	68,400	4.4	0.9
	Hemlock & white fir	J	157	31,400	103,000	2.0	0.4
		J	157	31,400	103,000	3.4	0.7
		J	157	31,400	103,000	4.4	0.9
		J	157	27,300	89,500	5.4	1.1

percent redry. Normally about 10 to 20 percent of the veneer must be redried. Emissions factors for redry are very low compared to green veneer. Daily average emissions factors should be adjusted to compensate for the amount of redry or would be calculated based on daily net production.[11]

6.3.1.2 Emission Tests of Control Devices. ODEQ Method 7 is the only test method that has been used extensively on exhaust streams from veneer dryer emission control devices. Tables 6-4 and 6-5 present emission data for several types of wet scrubbers, which are described in more detail in Chapter 2. Removal efficiencies of up to 90 percent of particulate and condensible organic emissions (as measured by ODEQ Method 7) have been reported for certain high-efficiency wet scrubbers that incorporate mist eliminators into equipment design.

Results of an EPA source test of four steam-heated veneer dryers controlled by a wet scrubber were inconclusive. The system tested was a spray tower/cyclone scrubber without a mist eliminator. Removal efficiency for particulate and condensible organic emissions (as measured by EPA Method 5X) varied from 6 to 29 percent in three runs, averaging only 16 percent. The removal efficiency for total organic emissions (as measured by EPA Method 25) ranged from less than zero to 14 percent in three runs, averaging less than zero. While it is possible for organic material to be stripped from scrubber water by exhaust gases, it is not likely to have occurred consistently throughout the week of testing. Some of the error is attributed to the difficulty in applying Method 25 to wet, partially condensed exhaust streams such as scrubber outlets. Analytical results from three laboratories that split Method 25 samples on this source test showed wide variation, although all three showed negative removal efficiencies across the scrubber.

Attempts to test boiler incineration systems also have been inconclusive. Results of EPA sampling of such a system treating emissions from three steam-heated veneer dryers are given in Tables 6-6 through 6-8. These data indicate but do not confirm the probability that removal efficiency of condensible organic compounds was

TABLE 6-4. EMISSION DATA FOR WET SCRUBBERS ON VENEER DRYERS[12 13 14]

System	Test or run number	Exhaust flow rate ($stdm^3/s$)	Exhaust flow rate ($stdft^3/min$)	Number and type of dryers[b]	Veneer production ($1,000\ m^2/h$, 9.5-mm basis)	Veneer production ($1,000\ ft^2/h$, 0.375-in. basis)	Temperature (° C) Inlet	Temperature (° C) Outlet	Particulate and condensible organic emissions[a] Inlet concentration ($g/stdm^3$, dry)	Inlet concentration ($gr/stdft^3$, dry)	Outlet concentration ($g/stdm^3$, dry)	Outlet concentration ($gr/stdft^3$, dry)	Removal efficiency (%)
Five-stage Burley Scrubber without mist eliminator	1	1.22[c]	2,580[c]	1/2 (D,ST)	1.92	20.7	175	65	0.757	0.331	0.350	0.153	54
	2	1.41[c]	2,980[c]	1/2 (D,ST)	1.06	11.4	176	61	0.627	0.274	0.373	0.163	40
	3	1.30[c]	2,750[c]	1/2 (G,ST)	1.21	13.0	167	68	0.565	0.247	0.295	0.129	48
	4	1.35[c]	2,860[c]	1/2 (G,ST)	1.83	19.7	168	67	0.492	0.215	0.341	0.149	31
Georgia-Pacific Emission Eliminator without mist eliminator	1	6.18[c]	13,100[c]	4 (ST)	2.08	22.4	155	79	0.268	0.117	0.110	0.048	59
	2	6.14[c]	13,000[c]	4 (ST)	2.38	25.6	153	77	0.236	0.103	0.124	0.054	48
	3	4.18	8,850	1 (GA)			169	67	0.223	0.0975	0.108	0.047	52
	4	-	-	1 (GA)					0.390	0.17	0.160	0.07	59
	5	7.93	16,800	4 (ST)	1.10	11.8	153	70	0.245	0.107	0.114	0.050	53
	6	10.0	21,400	4 (ST)	1.99	21.4	160	59	0.250	0.11	0.130	0.057	48
Georgia-Pacific Emission Eliminator with mist eliminator	1	7.50	15,900	2 (GA)	0.99	10.7	134	62	0.180	0.079	0.026	0.0112	86
	2	7.79	16,500	2 (GA)	1.27	13.7	128	62	0.130	0.059	0.015	0.0067	89
	3	5.00	10,600	1 (GA)	-	-	159	58	0.313	0.137	0.083	0.0361	74
	4	5.24	11,100	1 (GA)	-	-	155	62	0.538	0.235	0.181	0.079	66
	5	3.80	8,050	1 (GA)	-	-	113	52	0.085	0.037	0.046	0.014	62
	6	7.74	16,400	2 (GA)	-	-	137	58	0.526	0.23	0.032	0.02	91
Leckenby Scrubber	1	1.42	3,000	<1 (G,ST)	-	-	-	-	0.160	0.070	0.126	0.055	21
	2	-	-	<1 (G,ST)	-	-	-	-	0.183	0.080	0.126	0.055	31
	3	-	-	<1 (D,ST)	-	-	-	-	0.124	0.054	0.078	0.034	37
	4	-	-	<1 (D,ST)	-	-	-	-	0.310	0.137	0.158	0.069	50
Buchholz Scrubber	1	2.50[c]	5,300[c]	2/3 (G and D)	1.28	13.8	64 (G) 139 (D)	60	0.104	0.0454	0.072	0.0315	31
	2	2.42[c]	5,130[c]	2/3 (G and D)	1.05	11.3	69 (G) 134 (D)	58	0.096	0.042	0.058	0.0252	40
	3	1.58[c]	3,340[c]	1/3 (G)	1.05	11.3	128 (G)	60	0.202	0.0881	0.089	0.0390	56
	4	1.39[c]	2,940[c]	1/3 (G)	1.05	11.3	128 (G)	63	0.329	0.144	0.198	0.0864	40

D = dry end.
G = green end.
ST = steam-heated dryer(s).
GA = natural-gas-fired dryer(s).

[a]As measured by ODEQ Method 7.

[b]In some cases, only the emissions from certain stacks passed through the control device.

[c]Dry basis. Other flow rate values are on a wet basis.

TABLE 6-5. EMISSION DATA FOR SANDAIR FILTER SYSTMES ON VENEER DRYERS[8 12 15]

Test or run number	Exhaust flow rate[a] ($stdm^3/s$)	Exhaust flow rate[a] ($stdft^3/min$)	Number and type of dryers	Temperature[a] (° C) Inlet	Temperature[a] (° C) Outlet	Veneer production (1,000 m^2/h, 9.5-mm basis)	Veneer production (1,000 ft^2/h, 0.375-in. basis)	Particulate and condensible organic emissions[b] Inlet concentration ($g/stdm^3$, dry)	Inlet concentration ($gr/stdft^3$, dry)	Outlet concentration ($g/stdm^3$, dry)	Outlet concentration ($gr/stdft^3$, dry)	Removal (%)
1	2.49	5,270[c]	2 (GA)	132	65			0.220	0.096	0.025	0.011	88
2	7.31	15,500[c]	3 (ST)	137	53	3.66	39.4	0.378	0.165	0.183	0.0802	51
3	7.88	16,700[c]	3 (ST)	143	53			0.378	0.165	0.172	0.0753	54
4[d]	(11.0)	(23,400)	3 (ST)	(163)	(65)	2.38	25.6	0.39	0.17	0.08	0.035	79
5	(11.0)	(23,400)	3 (ST)	(163)	(65)	1.92	20.7	0.40	0.17	0.11	0.048	72
6	(11.0)	(23,400)	3 (ST)	(163)	(65)	2.64	28.4	0.41	0.18	0.07	0.031	83
7	(11.0)	(23,400)	3 (ST)	(163)	(65)	2.34	25.2	0.37	0.16	0.08	0.035	78
8	(11.0)	(23,400)	3 (ST)	(163)	(65)	1.84	19.8	0.40	0.17	0.06	0.026	85
9	(11.0)	(23,400)	3 (ST)	(163)	(65)	1.99	21.4	0.21	0.092	0.07	0.031	67

GA = natural-gas-fired dryer(s).
ST = steam-heated dryer(s).

[a]Values in parentheses are estimated.

[b]As measured by ODEQ Method 7.

[c]Dry basis. Other flow rate values are on a wet basis.

[d]Tests 4 through 9 were run on the same unit. In tests 4 through 6, the filter depth was 50 percent greater than the design depth.

TABLE 6-6a. RESULTS OF EPA TESTS OF A BOILER INCINERATION SYSTEM--PARTICULATE AND CONDENSIBLE ORGANIC EMISSIONS[7]
(Metric Units)

Run number	1		3		4[a]		5[a]		6		Average[b]	
Date	9/21/81		9/23/81		9/24/81		9/24/81		9/25/81			
Emission point	Dryers	Boiler 2	Dryers	Boiler 2	Dryers	Boiler 2	Dryers	Boiler 2	Dryers	Boiler 2	Dryers	Boiler 2
Sample volume (dry $stdm^3$)[c]	1.41	1.10	1.31	1.04	NA	0.86	NA	0.92	1.18	1.08	1.30	1.07
Stack gas flow rate (dry $stdm^3$/min)	677	1,120	728	1,090	NA	957	NA	918	660	1,130	688	1,120
Stack temperature (° C)	157	217	160	216	NA	159	NA	170	159	218	159	217
Stack gas moisture (% by volume)	15.1	17.4	11.7	19.2	NA	15.2	NA	21.2	11.2	18.3	12.7	18.3
Isokinesis (%)	112	104	99.6	101	NA	95.5	NA	106	99.7	101	104	102
Wet fan ΔP (mm H_2O)	NA	18.5	NA	12.7	NA	14.0	NA	23.9	NA	14.0	NA	15.0
Average opacity (%)	NA	16	NA	8	NA	9	NA	10	NA	9	NA	10
Production rate (1,000 m^2/h)[d]	2.94		2.68		NA	NA	NA	NA	2.26		2.63	
Particulate/condensible emissions												
g/dry $stdm^3$	0.341	0.238	0.391	0.245	NA	0.291	NA	0.343	0.357	0.188	0.363	0.224
kg/h	13.9	16.1	17.1	16.1	NA	16.7	NA	18.9	14.1	12.7	15.0	14.9
kg/1,000 m^2	4.73	5.48	6.38	6.01	NA	NA	NA	NA	6.24	5.62	5.78	5.69

NA = not applicable.

[a]Boiler background emission test.

[b]Average does not include boiler background emission tests.

[c]Standard conditions are 760 mm Hg at 20° C.

[d]On 9.5-mm basis, includes trim factor; does not account for redry material.

TABLE 6-6b. RESULTS OF EPA TESTS OF A BOILER INCINERATION SYSTEM--
PARTICULATE AND CONDENSIBLE ORGANIC EMISSIONS[7]
(English Units)

Run number	1		3		4[a]		5[a]		6		Average[b]	
Date	9/21/81		9/23/81		9/24/81		9/24/81		9/25/81			
Emission point	Dryers	Boiler 2	Dryers	Boiler 2	Dryers	Boiler 2	Dryers	Boiler 2	Dryers	Boiler 2	Dryers	Boiler 2
Sample volume (dry stdft^3)[c]	48.5	38.9	46.1	36.6	NA	30.5	NA	32.6	41.8	38.0	45.9	37.8
Stack gas flow rate (dry/stdft^3)[c]	23,900	39,700	25,700	38,500	NA	33,800	NA	32,400	23,300	40,000	24,300	39,400
Stack temperature (° F)	315	422	320	421	NA	317	NA	338	322	424	319	422
Stack gas moisture (% by volume)	15.1	17.4	11.7	19.2	NA	15.2	NA	21.2	11.2	18.3	12.7	18.3
Isokinesis (%)	112	104	99.6	101	NA	95.5	NA	106	99.7	101	104	102
Wet fan ΔP (in. H_2O)	NA	0.73	NA	0.50	NA	0.55	NA	0.94	NA	0.55	NA	0.59
Average opacity (%)	NA	16	NA	8	NA	9	NA	10	NA	9	NA	10
Production rate (1,000 ft^2/h)[d]	31.7		28.8		NA	NA	NA	NA	24.3		28.3	
Particulate/condensible emissions												
g/dry stdft^3	0.153	0.104	0.175	0.107	NA	0.127	NA	0.150	0.156	0.082	0.161	0.098
lb/h	31.4	35.4	37.8	35.4	NA	36.9	NA	41.9	31.1	28.1	33.4	33.0
lb/1,000 ft^2[d]	0.99	1.12	1.31	1.23	NA	NA	NA	NA	1.28	1.16	1.19	1.17

NA = not applicable.

[a]Boiler background emission test.

[b]Average does not include boiler background emission tests.

[c]Standard conditions are 29.92 in. Hg at 68° F.

[d]On 3/8-in. basis, includes trim factor; does not account for redry material.

TABLE 6-7a. RESULTS OF EPA TESTS OF A BOILER INCINERATION SYSTEM--TOTAL ORGANIC EMISSIONS (METHOD 25) AT VENEER DRYER EXHAUST[7]
(Metric Units)

Run number Date	1 9/21/81		3 9/23/81		6 9/25/81		Average	
Stack gas flow rate (dry $stdm^3/min$)[a]	677		728		660		688	
Stack temperature (° C)	157		160		159		12.7	
Stack gas moisture (% by volume)	15.1		11.7		11.2		12.7	
Production rate (1,000 m^2/h)[b]	2.94		2.68		2.26		2.63	
Analysis laboratory	TRC	NCASI	TRC	NCASI	TRC	NCASI	TRC	NCASI
Total organic emissions[c]								
ppm (C_1)	1,577	543	734	729	647	726	986	666
g/dry $stdm^3$ (C_1)	0.788	0.270	0.367	0.364	0.323	0.362	0.493	0.332
kg/h (C_1)	32.0 (12.6)[d]	11.0	16.0	16.3	12.8	14.3	20.3 (13.8)[d]	13.9
kg/1,000 m^2 (C_1)	10.9 (4.29)[d]	3.74	5.97	6.08	5.66	6.33	7.51 (5.25)[d]	5.38

TRC = TRC Environmental Consultants, Inc.
NCASI = National Council for Air and Stream Improvement.

[a]Standard conditions are 29.92 in. Hg at 68° F.

[b]On 3/8-in. basis, includes trim factor; does not account for redry material.

[c]Emissions calculated and reported as C_1. Does not include front half results from Method 5X sample.

[d]One data point from Test Run 1 not considered representative. Parenthetical values are approximations based on other test runs.

TABLE 6-7b. RESULTS OF EPA TESTS OF A BOILER INCINERATION SYSTEM--TOTAL ORGANIC EMISSIONS (METHOD 25) AT VENEER DRYER EXHAUST[7]
(English Units)

Run number Date	1 9/21/81		3 9/23/81		6 9/25/81		Average	
Stack gas flow rate (dry $stdm^3/min$)[a]	23,900		25,700		23,300		24,300	
Stack temperature (° F)	315		320		322		319	
Stack gas moisture (% by volume)	15.1		11.7		11.2		12.7	
Production rate (1,000 m^2/h)[b]	31.7		28.8		24.3		28.3	
Analysis laboratory	TRC	NCASI	TRC	NCASI	TRC	NCASI	TRC	NCASI
Total organic emissions[c]								
ppm (C_1)	1,577	543	734	729	647	726	986	666
gr/dry $stdft^3$ (C_1)	0.344	0.118	0.160	0.159	0.141	0.158	0.215	0.145
lb/h (C_1)	70.5 (27.7)[d]	24.3	35.3	36.0	28.2	31.6	44.8 (30.4)[d]	30.3
lb/1,000 ft^2 (C_1)	2.22 (0.87)[d]	0.765	1.22	1.22	1.16	1.30	1.58 (1.08)[d]	1.10

TRC = TRC Environmental Consultants, Inc.
NCASI = National Council for Air and Stream Improvement.

[a]Standard conditions are 29.92 in. Hg at 68° F.

[b]On 3/8-in. basis, includes trim factor; does not account for redry material.

[c]Emissions calculated and reported as C_1. Does not include front half results from Method 5X sample.

[d]One data point from Test Run 1 not considered representative. Parenthetical values are approximations based on other test runs.

TABLE 6-8a. RESULTS OF EPA TESTS OF A BOILER INCINERATION SYSTEM--
TOTAL ORGANIC EMISSIONS (METHOD 25) AT BOILER EXHAUST[7]
(Metric Units)

Run number Date	1 9/21/81		3 9/23/81		4[a] 9/24/81		5[a] 9/24/81		6 9/25/81		Average[b] (1, 3, 6)		Average[c] (4, 5)	
Stack gas flow rate (dry $stdm^3/min$)[d]	1,120		1,090		957		918		1,130		1,120		938	
Stack temperature (° C)	217		216		159		170		218		217		165	
Stack gas moisture (% by volume	17.4		19.2		15.2		21.2		18.3		18.3		18.2	
Production rate (1,000 m^2/h)[e]	2.94		2.68		NA		NA		2.26		2.63		NA	
Analysis laboratory	TRC	NCASI	TRC	NCASI	TRC	NCASI	TRC	NCASI	TRC	NCASI	TRC	NCASI	TRC	NCASI
Total organic emissions[f]														
ppm (C_1)	741	23.3	1,175	146	744	173	1,425	120	755	71.1	890	80.1	1,085	147
g/dry $stdm^3$ (C_1)	0.371	0.011	0.586	0.073	0.371	0.087	0.712	0.060	0.378	0.034	0.445	0.039	0.541	0.074
kg/h (C_1)	25.0	0.785	38.4	4.77	21.3	4.95	39.2	3.28	25.7	2.41	29.7	2.66	30.3	4.12
kg/1,000 m^2 (C_1)	8.50	0.267	14.3	1.78	NA[g]	NA[g]	NA[g]	NA[g]	11.4	1.07	11.4	1.04	NA[g]	NA[g]

NA = not applicable.

[a]Boiler background emission test.

[b]Average does not include boiler background emission test.

[c]Average of boiler background emission tests.

[d]Standard conditions are 29.92 in. at 68° F.

[e]On 3/8-in. basis, includes trim factor; does not account for redry material.

[f]Results not corrected for CO_2 interference. See Section 5.3.2.5. (Adjustments will be made to the data in the final report).

[g]Boiler load increased near the end of Run 4 and maintained at increased load during Run 5.

TABLE 6-8b. RESULTS OF EPA TESTS OF A BOILER INCINERATION SYSTEM--TOTAL ORGANIC EMISSIONS (METHOD 25) AT BOILER EXHAUST[7]
(English Units)

Run number Date	1 9/21/81		3 9/23/81		4[a] 9/24/81		5[a] 9/24/81		6 9/25/81		Average[b] (1, 3, 6)		Average[c] (4, 5)	
Stack gas flow rate (dry stdft^3)[d]	39,700		38,500		33,800		32,400		40,000		39,400		33,100	
Stack temperature (° F)	422		421		317		338		424		422		328	
Stack gas moisture (% by volume	17.4		19.2		15.2		21.2		18.3		18.3		18.2	
Production rate (1,000 ft^2/h)[e]	31.7		28.8		NA		NA		24.3		28.3		NA	
Analysis laboratory	TRC	NCASI	TRC	NCASI	TRC	NCASI	TRC	NCASI	TRC	NCASI	TRC	NCASI	TRC	NCASI
Total organic emissions[f]														
ppm (C_1)	741	23.3	1,175	146	744	173	1,425	120	755	71.1	890	80.1	1,085	147
g/dry stdft^3 (C_1)	0.162	0.005	0.256	0.032	0.162	0.038	0.311	0.026	0.165	0.015	0.194	0.017	0.236	0.032
lb/h (C_1)	55.0	1.73	84.6	10.5	47.0	10.9	86.3	7.23	56.5	5.31	65.6	5.85	67.2	9.08
lb/1,000 ft^2 (C_1)	1.74	0.055	2.94	0.365	NA[g]	NA[g]	NA[g]	NA[g]	2.32	0.219	2.32	0.213	NA[g]	NA[g]

NA = not applicable.
TRC = TRC Environmental Consultants, Inc.
NCASI = National Council for Air and Stream Improvement.

[a]Boiler background emission test.

[b]Average does not include boiler background emission test.

[c]Average of boiler background emission tests.

[d]Standard conditions are 29.92 in. at 68° F.

[e]On 3/8-in. basis, includes trim factor; does not account for redry material.

[f]Results not corrected for CO_2 interference. See Subsection 5.3.2.5. (Adjustments will be made to the data in the final report.)

[g]Boiler load increased near the end of Run 4 and maintained at increased load during Run 5.

greater than 70 percent. However, Method 25 analytical results showed such variation between laboratories that calculation of removal efficiencies is not valid. The cause of the sampling and/or analytical problems of this test is not known. ODEQ has attempted to test boiler incineration systems at three plants using a THA, but a volatile organic compound (VOC) removal efficiency (60 percent) could only be calculated for one plant.[16]

Emission reductions reportedly can be achieved by drying veneer for longer times at lower temperatures than normally used. Table 6-9 gives the results of emission tests on dryers where internal temperature (and thus stack temperatures) were lowered.

6.3.2 State Regulations Applicable to Plywood Plants

Oregon is the only State that has emission regulations that apply specifically to the plywood industry. Table 6-10 summarizes these regulations. The State's reference test method (Oregon Department of Environmental Quality Method 7) measures organic aerosols as particulate.

The State of Washington and some local agencies in Washington use general regulations which are applicable to all industry to limit emissions from plywood plants. Visible emissions are limited to an opacity of 20 percent, and particulate matter is limited to a concentration of 0.23 g/dry $stdm^3$ (0.1 gr/dry $stdft^3$).

Other locations limit emissions from this industry only with an opacity standard that is applicable to all industry, typically 20 to 40 percent.

6.3.2.1 Veneer Dryer Control Evaluation. These emissions consist of condensible and noncondensible organics and a small amount of filterable particulates. Although some losses occur during analysis, ODEQ 7 appears to be the most reasonable procedure for measuring condensible organics and filterable particulates. The procedure could be satisfactory to evaluate the performance of wet scrubbers and wet electrostatic precipitators (ionizing wet scrubbers).

6.3.3 Plywood Sanders

Few data exist that show removal efficiencies of plywood sander-dust emission control systems. Only exit streams sometimes are tested,

TABLE 6-9. TESTS SHOWING EMISSION REDUCTIONS ACHIEVED BY LOWERING DRYER TEMPERATURES[4]

Test number[a]	Dryer type	Damper setting	Stack temperatures (° C)		Average temperature reduction[b] (° C)	Reduction in particulate and organic emissions per unit of production[c] (%)
			Green end	Dry end		
1	Steam, longitudinal flow	Open	145	156		
			128	146	14	25
2	Steam, longitudinal flow	Closed	156	179		
			122	138	38	74
3	Gas, jet-impingement	Open	167	182		
			137	149	32	11
4	Gas, jet-impingement	Closed	184	180		
			151	152	30	-91 (increase)
5	Gas, longitudinal flow	Open	156	172		
			130	143	28	18
6	Gas, longitudinal flow	Closed	164	195		
			140	153	33	34

[a]Douglas fir heartwood was dried in each test.

[b]Based on the reported stack temperatures.

[c]As measured by a WSU method consisting of a particulate train followed by a flame ionization detector.

TABLE 6-10. SUMMARY OF STATE OF OREGON REGULATIONS FOR PLYWOOD MANUFACTURING

Veneer dryers

Opacity: 10 percent design opacity
10 percent average operating opacity
20 percent maximum opacity

Particulate limitations for wood-fired dryers:

(a)	3.7 g/m^2, 9.5-mm basis (0.75 lb/1,000 ft^2, 0.375-in. basis)	If fuel has moisture content by weight of <20 percent
(b)	7.3 g/m^2, 9.5-mm basis (1.5 lb/1,000 ft^2, 0.375-in. basis)	If fuel has moisture content by weight of >20 percent

(c) In addition to (a) and (b) above, 0.4 g/kg of steam generated

More restrictive limitations can be placed on particular plants in special problem areas.

Other emission sources (excluding veneer dryers and boilers)

Particulate limitations:

4.9 g/m^2, 9.5-mm basis (1 lb/1,000 ft^2, 0.375-in. basis)	Plywood or veneer production

TABLE 6-11. EMISSIONS FROM PLYWOOD SANDERS WITH PRODUCT RECOVERY CYCLONES[16 17 18]

Test or run number	Exhaust flow rate ($stdm^3/s$)	Exhaust flow rate ($stdft^3/min$)	Sanded production[a] ($1,000\ m^2/h$)	Sanded production[a] ($1,000\ ft^2/h$)	Depth of cut (mm)	Depth of cut (in.)	Particulate concentration exiting the cyclone ($g/stdm^3$)	Particulate concentration exiting the cyclone ($gr/stdft^3$)	Removal efficiency[b] (%)	Mean outlet particle size (μm) Size	Mean outlet particle size (μm) Range
1	11.6	24,600	2.90	31.2	0.64	0.025	0.14	0.061	>99	-	-
2	10.5	22,200	2.90	31.2	0.64	0.025	0.18	0.078	>99	6.4[c]	4-12
3	9.16	19,400	-	-	-	-	0.37	0.16	-	6.2[c]	3-15
4	10.3	21,900	0.45	4.8	-	-	0.087	0.038	>94	49.0[d]	-
5	19.7	41,800	-	-	-	-	0.357	0.156	94	7.0[c] 19.0[d]	- -
6[e]	15.7[f]	33,200[f]	-	-	-	-	0.044	0.019	99.5	-	-

[a]Production refers to the surface area of one side of the panels that reach the sander.

[b]Inlet loadings were calculated based on production data, depth-of-cut data, or changes in panel weight during sanding.

[c]Measured on a count basis.

[d]Measured on a weight basis.

[e]Average of three tests on a bank of four cyclones.

[f]Dry basis. Other flow rate values are on a wet basis.

and fabric filter systems often are assumed to be in compliance without testing. Table 6-11 summarizes test data for plywood sanderdust cyclones for which inlet particulate loading can be estimated. These data indicate that high-efficiency cyclones can achieve 99 percent removal of plywood sanderdust. Actual removal rates vary according to type of wood sanded, presence or absence of sawdust (sawdust is sometimes ducted to the same cyclone as sanderdust), particulate loading rates, and equipment design.

6.4 REFERENCES

1. Cronn, D. R., M. J. Campbell, L. Bamesberger, and S. Truitt. Study of the Physical and Chemical Properties of Atmospheric Aerosols Attributable to Plywood Veneer Dryer Emissions. Washington State University. Pullman, WA. Final Report to American Plywood Association. June 1981.

2. Brackbill, E. A. Review of Candidate Sampling and Analysis Procedures for the Determination of Plywood Veneer Dryer Organic Emissions. TRC Environmental Consultants, Inc. Wethersfield, CT. EPA Contract 68-02-2820. May 21, 1981.

3. Federal Register. 36 FR 159. August 17, 1971.

4. Monroe, F. L., W. L. Bamesberger, and D. F. Adams. An Investigation of Operating Parameters and Emission Rates of Plywood Veneer Dryers--Final Report. Washington State University. Pullman, WA. July 1972. 50 p.

5. Federal Register. 44 FR 194. October 3, 1980.

6. Kalika, P. W., E. A Brackbill, J. H. Powell, E. A. Pearson, and S. D. Peirce. Plywood/Veneer Emission Test Report, Georgia-Pacific Plywood Plant, Springfield, Oregon, June 1981. TRC Environmental Consultants, Inc. East Hartford, CT. EPA Emission Measurement Branch Report 81-PLY-4, Contract No. 68-02-3543. December 1981.

7. Kalika, P. W., E. A. Brackbill, J. H. Powell, E. A. Pearson, and S. D. Peirce. Plywood/Veneer Emission Test Report, Champion Plywood Plant, Lebanon, Oregon, September 1981. TRC Environmental Consultants, Inc. East Hartford, CT. EPA Emission Measurement Branch Report 81-PLY-2, Contract No. 68-02-3543. May 1982.

8. Letter and attachments from Wellman, E. A., BWR Associates, to McCarthy, J. M., Research Triangle Institute. December 22, 1980. Veneer dryer emission data.

9. Grimes, Gary. Direct-Fired Drying--the Hybrid Unit. Control in the Forest Products Industry. SWF Plywood Company. Medford, OR. (Presented at the Pollution Control Seminar for the Northwest Forest Industries. Portland. April 5, 1978.) 13 p.

10. Letter and attachments from Emery, J. A., American Plywood Association, to McCarthy, J. M., Research Triangle Institute. December 16, 1981. Comments on draft chapters of plywood report.

11. Letter and attachment from Blosser, R. O., National Council of the Paper Industry for Air and Stream Improvement, Inc., to Barry, J. C., U.S. Environmental Protection Agency. March 8, 1983. Draft study of Organic Compound Emissions from Veneer Dryers and Means for their Control.

12. Oregon Department of Environmental Quality, Air Quality Control Division. Veneer Dryer Control Device Evaluation, Supplemental Report. December 14, 1976.

13. Tretter, V. J., Jr. Plywood Veneer Dryer Emission Control Systems. Georgia-Pacific Corporation. Atlanta, GA. (Presented at the Annual Meeting of the Air Pollution Control Association. Portland. June 27-July 1, 1976.) 17 p.

14. Mick, Allan. Current Particulate Emissions Control Technology for Particleboard and Veneer Dryers. Mid-Willamette Valley Air Pollution Authority. Salem, OR. (Presented at the Annual Meeting of the Pacific Northwest International Section of the Air Pollution Control Association. Seattle. November 28-30, 1973.)

15. Letter and attachments from Hirsch, J., Rader Companies, Inc., to McCarthy, J. M., Research Triangle Institute. February 24, 1981. Response to request for information on sand filters.

16. Bosserman, P. B. Controls for Veneer and Wood Particle Dryers. Oregon Department of Environmental Quality. Portland, OR. (Presented at the Annual Meeting of the Pacific Northwest International Section of the Air Pollution Control Association. Spokane. November 3, 1981.)

17. Letter and attachments from Tice, G. W., Georgia-Pacific Corporation, to McCarthy, J. M., Research Triangle Institute. March 9, 1981. Sanderdust emission control data.

18. Letter and attachments from Willhite, P. T., Del Green Associates, to McCarthy, J. M., Research Triangle Institute. March 18, 1981. Sanderdust emission control data.

19. Memorandum from McCarthy, J. M., Research Triangle Institute, to Vincent, E. J., EPA. August 13, 1981. Minutes of meeting with American Plywood Association.

TECHNICAL REPORT DATA
(Please read Instructions on the reverse before completing)

1. REPORT NO. EPA-450/3-83-012	2.	3. RECIPIENT'S ACCESSION NO.
4. TITLE AND SUBTITLE Control Techniques for Organic Emissions from Plywood Veneer Dryers		5. REPORT DATE May 1983
		6. PERFORMING ORGANIZATION CODE
7. AUTHOR(S)		8. PERFORMING ORGANIZATION REPORT NO.
9. PERFORMING ORGANIZATION NAME AND ADDRESS Office of Air Quality Planning and Standards U.S. Environmental Protection Agency Emission Standards and Engineering Division (MD-13) Research Triangle Park, North Carolina 27711		10. PROGRAM ELEMENT NO.
		11. CONTRACT/GRANT NO. 68-02-3056
12. SPONSORING AGENCY NAME AND ADDRESS		13. TYPE OF REPORT AND PERIOD COVERED
		14. SPONSORING AGENCY CODE EPA/200/04

15. SUPPLEMENTARY NOTES

16. ABSTRACT

This document summarizes information gathered by the U.S. Environmental Protection Agency (EPA) on the control of emissions from softwood plywood manufacturing. It is intended to inform Regional, State, and local air pollution control agencies about technology for abatement of these emissions. Information is given on environmental impacts and costs of control.

17. KEY WORDS AND DOCUMENT ANALYSIS

a. DESCRIPTORS	b. IDENTIFIERS/OPEN ENDED TERMS	c. COSATI Field/Group
Air Pollution Plywood Pollution Control Volatile Organic Compounds (VOC)	Air Pollution Control	13 B

18. DISTRIBUTION STATEMENT	19. SECURITY CLASS *(This Report)* Unclassified	21. NO. OF PAGES
	20. SECURITY CLASS *(This page)* Unclassified	22. PRICE

EPA Form 2220-1 (9-73)