Chapter 3
Monitoring Technology - Instrumentation

Continuous monitoring of non-criteria gases may require specialized sampling and analysis procedures since the measurement of reactive and condensable gases can be particularly difficult. An understanding of the composition of the stack gas stream, the behavior of the components of interest, and the potential physical and chemical reactions that may occur in the stack or within the sampling system is necessary to understand and gauge the sampling problems that may be encountered.

Sampling approaches used in the measurement of criteria pollutants can be applied to the measurement of hazardous air pollutants if sufficient care is taken. Once a representative sample can be delivered to an analyzer, a number of options are available for measuring the concentrations of organic compounds, particulate matter, and metals. Approaches to both sampling and analysis are discussed in this chapter.

3.1 Monitoring Systems for Non-criteria Gases

Solutions to sampling problems for non-criteria gases are offered to varying degrees by different system configurations including hot/wet extractive systems, dilution systems, close-coupled systems and in-situ monitoring systems. Each configuration has its strengths and weaknesses. The sampling system chosen must be compatible with the analytical instrumentation used to measure the gas concentrations. Selection of both the sampling and analytical systems will depend greatly on the chemical characteristics of the pollutant.

3.1.1 Sampling Problems For Reactive and Condensable Gases

Reactive and condensable gases such as HCl, NH_3, and formaldehyde present great measurement challenges. Such gases may react with other components within the stack gas stream; they may condense or be absorbed by liquid condensate within an extractive sampling system, they may adsorb onto surfaces, or they may polymerize before reaching the analyzer. Where these and other related phenomena occur, measurement results will be affected. The extent of these effects range from introducing bias into the data to completely invalidating all measurements. Continuous monitoring of reactive and condensable gases is much more difficult than monitoring of criteria pollutants. Depending upon the components making up the flue gas stream, special sampling equipment may be needed and special operation and maintenance procedures may be required to achieve reliable results.

3.1.1.1 Surface Adsorption

Different compounds may adsorb onto the surface of various materials within the sampling system components and therefore be removed from the sample stream before reaching the analyzer. The extent of the adsorption depends on many factors, including: the physical properties of the compound of interest, the gas concentration of the analytes and interferences, the type of material comprising the adsorption surface, the amount of exposed surface area, the surface condition, the gas and surface temperatures, and the time needed for the adsorption process to reach equilibrium. The effects of many of these factors are interdependent and vary with age and previous use (or abuse) of the sampling system.

The selection of appropriate sampling system materials is important in minimizing the adsorption of many compounds. In general, selection of inert materials minimizes adsorption but several other factors must be considered. For example, measurement of ppm levels of criteria pollutants such as SO_2 and NO_x usually can be accomplished with sampling system components fabricated of high quality stainless steel, Teflon, or glass. In many applications, Teflon is viewed as a completely inert material. However, less adsorptive materials, such as poly ether ether ketone (PEEK) may be required for tubing used in measurement applications of ppb level of organic compounds. Similarly, the use of Teflon is not recommended for measurement of “organofluoro” compounds because they are chemically similar to the Teflon polymer and may result in a positive measurement bias. Also, studies have been performed that demonstrate that certain materials can permeate Teflon (Dunder, 1995).

In general, increasing the surface temperature of a solid will reduce gas adsorption on the solid. Heat transferred from the surface increases the internal energy of the adsorbed molecule helping it to overcome the weak molecular attraction and escape

from the surface. For highly adsorptive gases, sample lines may be operated near the physical temperature limits. However, for some compounds such as CO, permeation through the walls of Teflon tubing occurs to a greater extent at higher temperatures.

The presence of "active sites", e.g., irregularities in a material surface at the molecular level, provides locations for chemisorption or the formation of weak chemical bonds with gas molecules that significantly affect the adsorption of gases. In the measurement of low concentrations of organics, highly polished stainless steel vessels with thermally deposited nickel are used to minimize the effects of adsorption. The virgin surface is virtually free of active sites and good sample recovery efficiencies have been obtained for many compounds. When small amounts of moisture are present in the samples less adsorption will occur. Speculation is that the water molecules preferentially occupy the reactive sites and thus minimize adsorption of other analytes. Similarly, improved recovery efficiencies have been observed in the presence of 2 percent moisture by volume (Peeler, 1996).

Surface corrosion, due to the deposition of acids or other factors, creates many active sites in metal surfaces and greatly changes the adsorptive effects of the surface for many compounds. The potential for degradation of a sampling system over time is great because stack gases often contain significant concentrations of sulfuric, nitric, hydrochloric, or other acids. A sampling system that initially performs very well may be rendered completely incapable of transporting HCl to the analyzer due to corrosion caused by the accumulation of condensate within the system. In addition, deposits of particulate matter on filters or other surfaces within the sampling system may increase adsorption greatly. For these reasons, the age and history of use of a sampling system affects its performance. Therefore, periodic checks of the sampling system are required.

Variations in the gas concentration, or changes in other parameters, affect the adsorption equilibrium resulting in subsequent increased adsorption or desorption of the compound of interest. Adsorption affects the response time of an extractive sampling system; the greater the adsorption, the longer the time required for a measurement system to display a stable and fully equilibrated response to a step change in gas concentration. The effects of adsorption may sometimes be determined through response time tests using dry calibration gases. However, as discussed above, the adsorption also may be affected by the presence of moisture or other components in the stack gas samples. Small unswept volumes within the sampling system (e.g., calibration injection lines) can mimic the effects of adsorption by allowing analytes to diffuse during sampling, thus confounding attempts to quantify adsorption. Because sampling systems often are fabricated of many components and different materials, isolating adsorption problems can be quite difficult.

3.1.1.2 Solubility and Condensation

The stack gas streams at stationary sources contain compounds that will condense if the sample temperature is reduced. Depending on the type of sampling system that is used, water vapor may condense as the sample temperature is lowered. Other compounds, such as sulfuric acid, may condense along with water vapor to form acid condensate, or sulfuric acid may condense even when the sample temperature is maintained above the moisture dew point. Condensate formed by cooling stack gas samples can be a complex mixture of substances. This condensate may be detrimental to the sampling system materials and cause corrosion or other problems.

Some compounds, such as HCl and NH_3, are highly soluble in water. The presence of condensate within the sampling system will scrub water soluble compounds such as HCl. Obviously, if HCl is the compound of interest, the presence of condensed moisture in the sampling system will invalidate measurements. In other cases, where measurements of insoluble compounds are made in a sample stream that contains HCl, the presence of condensed moisture in the sampling system may protect the analyzer from damage. Thus, a decision to use a condenser system to remove moisture depends on the solubility of the compound of interest and other materials present in the stack gas matrix.

Industrial process emission streams will reflect a wide range of moisture contents, depending on the nature of the process and the type of control equipment that is installed. The moisture content that will be encountered in a particular application must be known; 1) to size condensers or dryers used for moisture removal, 2) to select an appropriate dilution factor to maintain the sample above its dew point, or 3) simply to gauge the significance of the problem. The moisture content of combustion source exhaust streams typically ranges from 8 to 20 percent by volume depending on the fuel combusted. Hazardous waste incinerators with quench towers and spray dryers may have emission streams containing as much as 50 percent water. Portland cement kiln exhaust streams are likely to contain moisture ranging from 10 to 35 percent by volume depending on the type of process (i.e., dry process, precalciner or wet process kiln). On the other

end of the spectrum, sulfuric acid plants will have no moisture at all in the stack gas. The moisture content may be estimated based on knowledge of the process or it may be measured directly over the range of process/control equipment operating conditions.

The absorption of a somewhat water soluble component will reach an equilibrium between the liquid and gas phases given sufficient time and a constant concentration of the component in the gas phase. (This is not the case where chemical reactions with other components occur in solution.) However, most sampling systems form new condensate continuously, and the concentration in the gas sample may also change with time. Therefore, the application of equilibrium solubility constants may be inappropriate, or at best, an indication of a one-sided limit for estimating the extent of this phenomena. The design of condensers in extractive systems should minimize contact of the condensate and the sample stream to minimize the absorption of slightly water soluble compounds. That the condensate not be allowed to accumulate is also important; it should be continuously removed to minimize absorption of soluble compounds and opportunities for reactions with other stack gas constituents.

Solubility losses of many pollutants are understood poorly. VOC or organic hazardous air pollutant monitoring applications may contain mixtures of soluble, slightly soluble, and insoluble components. Little quantitative information is available in the literature. A few studies at hazardous waste incinerators and sewage sludge incinerators have indicated that heated sampling systems with total hydrocarbon (THC) analyzers measure higher concentrations of volatile organics than systems that include refrigerant moisture removal systems (Cone, 1989). Thus, some regulatory applications specify the use of a heated system even though operational problems are reduced extensively with a “cold” system. Unfortunately, the identity of the specific compounds that are removed in a water condenser and the degree to which they are removed are largely unknown because THC systems provide no information about the individual organic species that are present.

A few studies have been performed using condensers with either FTIR or GCMS analyzers where a variety of organic compounds were dynamically spiked into sample streams (EPA, 1993; Peeler, 1996). The investigators of these studies have demonstrated acceptable sample recovery efficiencies for certain water soluble compounds in the presence of 8 to 35 percent water vapor. (See Chapter 7 discussions regarding dynamic spiking procedures.)

3.1.1.3 Chemical Reactions

Chemical reactions can occur between various stack gas components resulting in the formation of new chemical species. Because of the complex nature of some stationary source emissions, it is difficult to determine the extent of these chemical reactions. Polymerization, neutralization, and sublimation/condensation reactions are suggested frequently by scientists, engineers and technicians as causing sampling and analytical problems. Many undocumented myths exist about the various chemical reactions both within the stack and within the sampling system. Determining whether chemical reactions occur in the stack or in the sampling system when performing extractive testing is very difficult, because the analyzer only detects what the sampling system can deliver. Detection of chemical reactions that occur within the source virtually are impossible to determine because some species are short lived, while others reach a state where the products of the chemical reaction are in equilibrium with the reactants.

Polymerization Reactions. Polymerization reactions are those that occur when a compound reacts with itself (or a similar compound) to form a large mole-cule. An example of this phenomena is the reaction of formaldehyde with itself to form paraformaldehyde. Paraformaldehyde is a solid that may be formed in sampling systems where cold spots exist. Individual formaldehyde molecules react with each other at the surface of these cold spots to form a polymer layer. This deposition results in a negative measurement bias for formaldehyde. The results of polymerization reactions manifest themselves in a manner similar to surface adsorption.

Neutralization Reactions. Neutralization reactions are those reactions that have a net effect in reducing an acidic or basic component in the stack gas. In the pure sense, neutralization reactions usually occur in solution where hydrogen ions (H^+) and hydroxide ions (OH^-) react to form water. In the gas phase, neutralization may occur by solubilization first and neutralization second, or by direct adsorption of components onto particulate matter. The apparent removal of HCl by CaO (lime) in baghouses following spray dryers on the particulate filter cake of a sampling system are examples of this type of reaction. Reaction of HF with silica in glass surfaces to form SiF_4 is another neutralization reaction.

Salt-forming Reactions. Salts can form when two or more gaseous compounds react. An important example is the equilibrium reaction between gaseous hydrochloric acid (HCl) and ammonia (NH_3) to form solid ammonium chloride (NH_4Cl). Both HCL and NH_3 are volatile, non-condensable gases while ammonium

chloride is a water soluble solid compound having an exceptionally low vapor pressure. This reaction is known to occur under atmospheric conditions (Seinfeld, 1986), and may cause either positive or negative measurement biases that are dependent upon the stack gas and sample delivery temperatures.

Another example of a salt-forming reaction is the combination of SO_2, NH_3, and water to form ammonium bisulfate. This reaction can occur in the atmosphere downstream of a source, producing a detached plume and in some cases particulate fall-out. This reaction can also occur within the condenser of a CEM system creating low biases for either SO_2 or NH_3 measurements.

3.1.2 Solutions to Sampling Problems

Extractive sampling systems must be designed and operated in a manner that provide consistently representative samples to the analyzer. The design of the sampling system must eliminate, or at least minimize, any reactions or loss of the analytes of interest before they reach the analyzer. The operation of the sample acquisition and sample handling components must ensure that the necessary conditions are maintained over the complete range of source operating conditions to afford representative measurements of reactive and condensable gases.

3.1.2.1 Hot/wet Systems

"Hot/wet systems" are extractive CEM systems that maintain the sample temperature above its dew point throughout the sampling system and within the analyzer. These systems may be used for the measurement of water soluble compounds and commonly are used for monitoring non-criteria pollutants such as HCl, NH_3, and VOCs. Other compounds can also be measured provided that a suitable heated analyzer is available. Hot/ wet systems have been used for many years to monitor criteria pollutant emissions such as SO_2, NO_x, and CO. Important aspects of hot/wet sampling systems for reactive and condensable gases are illustrated in Figure 3-1.

Hot/wet sampling systems must not only maintain the sample temperature above the dew point to avoid condensation, they must also minimize adsorption and avoid the potential for chemical reactions to occur. Consider for example, monitoring of HCl which is 1) very water soluble, 2) adsorbs onto common sampling system materials, and 3) participates in chemical reactions with other stack gas constituents at certain sources. Extractive HCl sampling systems have been used that minimize adsorption effects by operating Teflon sampling lines at temperatures between 350°F and 375°F (the maximum operating temperature for Teflon). High sampling flow rates are maintained (20 liters per minute) and short sampling lines are used in these systems to minimize the residence time and to minimize the surface area for adsorption. Heated head pumps fabricated of 316 stainless steel or other special alloys and with Teflon diaphragms are used to avoid condensation or adsorption. All cold spots within the sampling system such as connections between heated line segments or connections to pumps or manifolds must be eliminated. Nothing less than meticulous attention to ensuring that the entire sample path is heated will prove adequate. The performance of "system calibrations" where calibration gases are introduced at the outlet of the sampling probe are very important for these types of systems to identify and/or account for the effects of adsorption (see Figure 7-5). System calibrations are sometimes avoided in practice because of the high consumption rate of calibration gases (and corresponding cost) due to the high sampling rates and the longer time required to achieve an equilibrated instrument response.

HCl also serves as an example of a chemically reactive component. HCl may participate in chemical reactions with lime or similar materials collected within the sampling system. Special provisions are required to minimize the collection of the particulate matter where a stack gas stream contains solids or liquids that are chemically reactive with the component of interest. Since the reaction of HCl with particulate material is most likely to occur on filters, the equipment must be designed to accommodate system calibrations where calibration gases are introduced upstream of the filters. This may help to detect whether reactions with the particulate matter are occurring. (Procedures described in Chapter 7, Dynamic Analyte Spiking, provide a method to detect such chemical reactions.)

As previously described, HCl may participate in reactions with ammonia to form ammonium chloride salts. As discussed before, this reaction is sensitive to the sample temperature. Where the sample temperature within the analyzer is substantially below the stack gas temperature, the reaction may consume HCl and thus introduce a negative (low) bias in the HCl measurement results. Conversely, where the measurement system is maintained at a higher temperature than the stack temperature, particulate ammonium chloride may volatilize to form HCl and NH_3 thereby creating a positive bias in HCl monitoring results. The potential for such biases to occur at particular sources, and the effects of temperature changes between the stack and the analyzer, must be examined for hot/wet measurement systems.

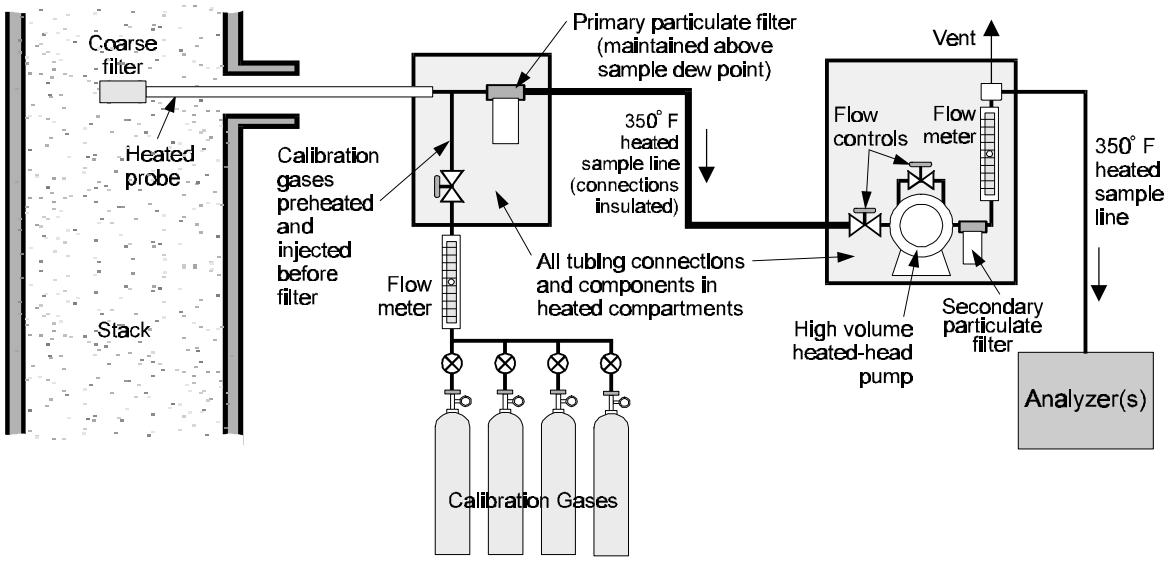

Figure 3-1. Hot/wet sampling systems.

3.1.2.2 Dilution Systems

Dilution systems quantitatively dilute stack gas samples with clean dry air to reduce the relative moisture content so that the sample is maintained above the dew point with little or no heating. Because moisture condensation is eliminated as a potential problem, heated sample lines and manifolds can be replaced with simpler, less expensive components. Sample gas condensers or permeation dryers are eliminated also. Usually an aspirator or eductor is used to move both sample and dilution gas thus, eliminating the need for a sample pump. On the other hand, clean-up systems to remove moisture, CO_2, oil, hydrocarbons, or other components from the dilution gas may be necessary.

In-stack dilution probes use critical orifices to control sample flow rate and aspirators to both draw stack gas through the critical orifice and supply dilution air (Figure 3-2).

The critical orifice in the dilution probe ensures that the sample extraction rate is independent of the aspirator vacuum thus providing a constant sample flow rate and consistent dilution of the sample gas. Calibration gases are introduced upstream of the critical orifice and are diluted in exactly the same manner as stack gas samples. In-stack dilution probes are available from many manufacturers and have been used widely in monitoring criteria pollutants, particularly in the acid rain program. Dilution ratios ranging from

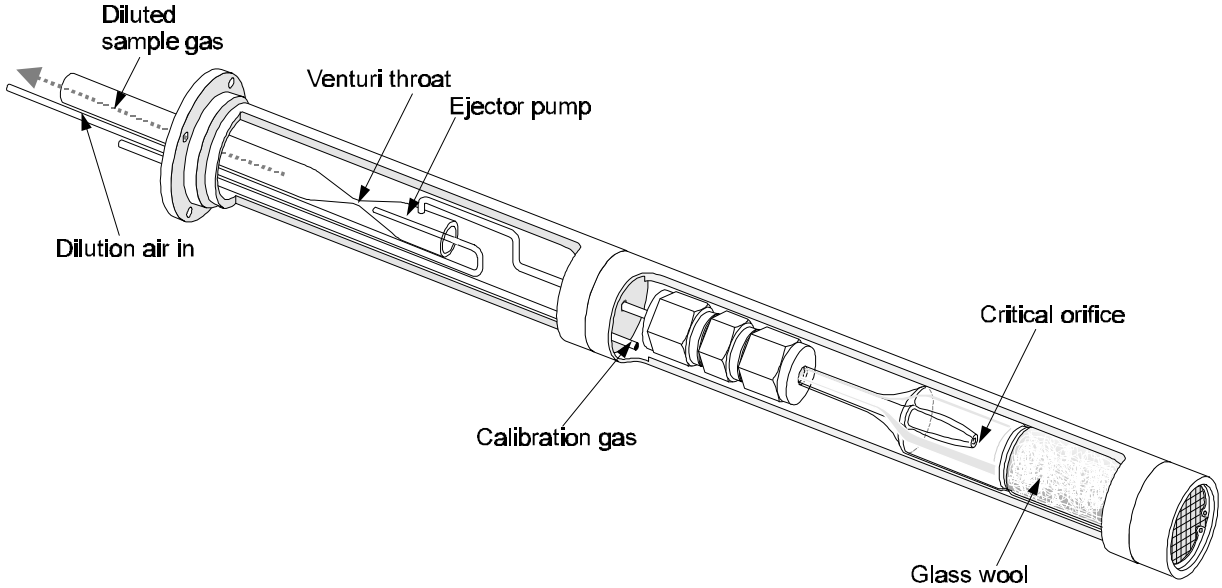

Figure 3-2. In-stack dilution probe.

20/1 to 1,000/1 are used in practice. Analyzers that were developed originally to monitor SO_2 and NO_x concentrations in ambient air are used for emission monitoring in the acid rain program.

Variations in the sample dilution ratio, and resulting biases in monitoring results, may occur where in-stack dilution probes are subject to varying stack temperature, pressure, or molecular weight. These effects have been characterized by Jahnke (Jahnke, 1994a). Newer designs of dilution systems have located the critical orifice and aspirator outside of the stack in a temperature controlled region to minimize the effects of stack gas temperature variations on the dilution ratio (Figure 3-3).

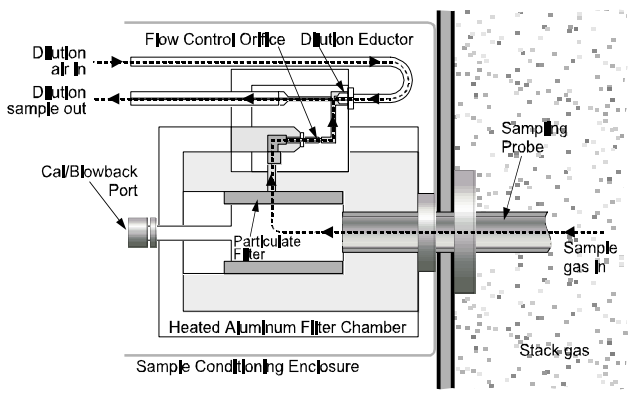

Figure 3-3. Out-of-stack dilution system.

A dilution sampling system is not appropriate where an analyzer with the requisite sensitivity is not available to reliably measure the diluted samples. Usually, the minimum dilution ratio is determined based on the maximum expected moisture content of the stack gas and the minimum temperature in the sampling system or analyzer. Applying this dilution factor to the expected stack gas concentration provides an estimate of the required measurement range. An analyzer with sufficient sensitivity, resolution, and signal-to-noise capability must be available for this operating range. The analyzer must be designed for the specific measurement range; incorporating measurement cells with sufficient optical path length and appropriate filters, detectors, and other devices necessary for the measurement level. Simply increasing the electronic gain of an analyzer does not always change the measurement range.

Problems with adsorption may be encountered with dilution systems even though condensation of moisture is avoided. EPA studies to evaluate HCL dilution system performance at municipal waste combustors and at hazardous waste incinerators demonstrated very slow response times that were attributed to adsorption of the HCL on Teflon sample lines (Shanklin, 1989). The use of heated sample lines can improve the system response times and can provide additional protection against condensation in applica-tions where extremely cold ambient temperatures are encountered. However, one of the major advantages of using a dilution system is lost if heated sample lines are required.

The accumulation of organic material within the aspirator of an in-stack dilution probe has been observed during monitor evaluation tests at a power plant in Virginia. This was attributed to localized condensation occurring because of cooling by the dilution air. Pre-heating of the dilution air eliminated this problem. In addition, condensation of acids may occur in dilution sampling systems even though condensation of moisture is avoided. Accumulation of sulfuric acid has been observed in unheated dilution sampling lines at coal-fired electric utility boilers.

One of the major advantages of dilution sampling systems is that they minimize the volume of sample gas extracted from the stack and thereby minimize the contamination of the system by particulate matter. The frequency of replacing filters and other maintenance activities is reduced for dilution systems because less particulate matter is introduced to the system. Nevertheless, the relative amounts of particulate matter and gases extracted is the same for dilution and conventional extractive systems. Therefore, the potential for chemical reactions or adsorption between gases of interest and the particulate matter is not reduced.

3.1.2.3 Close-Coupled Systems

Close-coupled systems minimize extractive sampling components by effectively placing the measurement sensor in close proximity to the sampling point. Many of the problems observed in other extractive sampling systems are eliminated. Close-coupled systems have been developed for the measurement of criteria pollutants (Mandel, 1995). Close-coupled systems also have applications in monitoring non-criteria air pollutants particularly reactive and condensable gases. Several fundamentally different configurations have been developed.

Close-coupled systems have been developed that use FID detectors in “total hydrocarbon” monitoring systems as shown in Figure 3-4. In this example, the heated FID is located in a thermally controlled enclosure just outside the stack wall. The sample is conveyed only a very short distance, thus the surface area for adsorption/desorption reactions and the time allowed for reactions to occur before the sample

reaches the detector are greatly minimized. This design allows for rapid responses of the measurement system and minimizes sampling system maintenance.

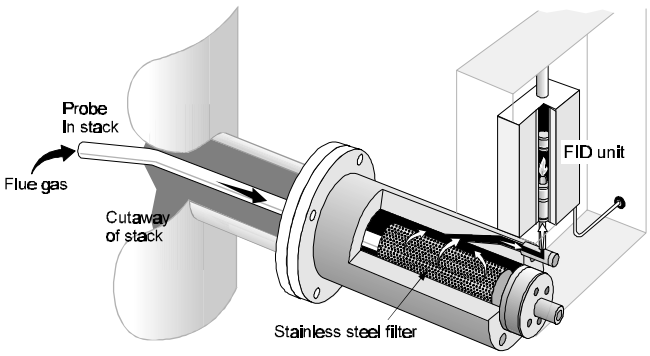

Figure 3-4. Close coupled system.

Close-coupled systems have been developed that use "reactive gas analyzers" for the measurement of NH_3, SO_3, and H_2SO_4. These measurement systems incorporate a means of contacting the sample gas stream with an absorbing solution at the outlet of the sampling probe. The absorbing solution may simply absorb the compound of interest or it may facilitate chemical reactions which convert this component to a more stable form. The chemical solution is continuously renewed and after exposure to the gas sample it is conveyed some distance to an analyzer which provides for the determination of concentration. This approach provides for the immediate reaction of the component of interest, and possibly the selective chemical removal of interfering species, to make the measurement. Many of the precautions evident in other systems that are necessary to avoid condensation, minimize adsorption, or avoid chemical reactions are not needed in this approach.

Another close-coupled system configuration has been introduced which uses a solid state tunable diode laser analytical method (Frish, 1996). This technique is capable of measuring many components in the infrared spectrum and can be used for monitoring NH_3, HF, H_2S and other toxic gases. In these systems, the laser source and photodetectors necessary for the measurement are contained in a control module at a remote convenient location as are analyzers in extractive monitoring systems. A fiber optic cable is used to connect the control module to a sample probe. The probe provides for the continuous flow of stack gas through an optical cell mounted in a thermally controlled chamber immediately outside the stack as shown in Figure 3-5.

Because this measurement system can employ fiber optic cables as long as 1 km, the advantages of a close-couple optical measurement cell and the convenience of a remote analyzer are provided. In addition, a number of sample probes can be connected to the same control module thereby offering additional cost savings for applications where measurements are required at several locations.

3.1.2.4 In-Situ Measurement Systems

In-situ systems for the measurement of gases sense the concentration of the gas of interest within the stack by either placing a detector within the stack or by projecting a light beam through a portion of the stack gas stream and analyzing various spectral phenomena. Point in-situ systems measure the concentration at a specific point or over a relatively short path length through the stack gas. Cross-stack systems project a light beam across the stack. These systems may be either single pass or double-pass systems depending on whether the light source and detector are on the same or opposite ends of the light path. A double pass system is illustrated in Figure 3-6.

In-situ systems for measurement of criteria pollutants are described by Jahnke (Jahnke, 1993). Regardless of the configuration, all in-situ systems must be designed to determine the concentration at stack conditions, which typically involves varying temperature, pressure, and moisture content. Other factors, such as particulate loading or the concentration of interfering gases, also vary and may affect the measurement process or accuracy of results.

An advantage of in-situ systems is that many of the sampling problems associated with extractive systems are eliminated. Assuming that the stack gas temperature is above the dew point, condensation is not an issue. Adsorption of gases is irrelevant. Reactions between gases and particulate matter can be ignored for all in-situ systems except for those that use a thimble or filter to protect an in-stack detector. In-situ analyzers are particularly appropriate, and in some cases, the only option for the measurement of reactive and condensable gases because the influences of the extractive sampling system are eliminated.

On the other hand, in-situ analyzers may need to compensate for variations in gas density due to temperature or pressure variations, variations in spectral absorption due to temperature shifts, as well as variations in particulate matter loading and the presence of other interfering species. The method used to

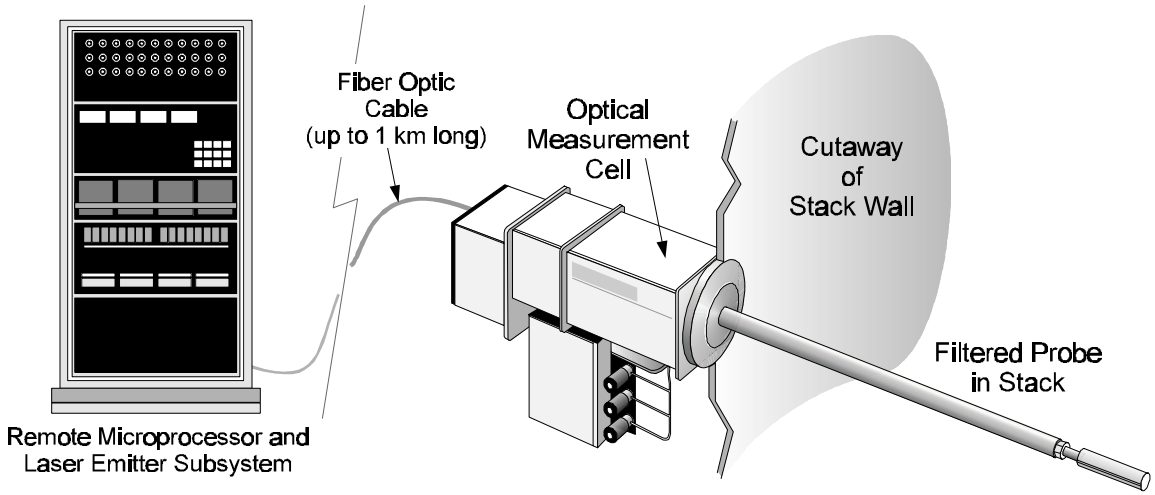

Figure 3-5. Close-coupled laser monitoring system.

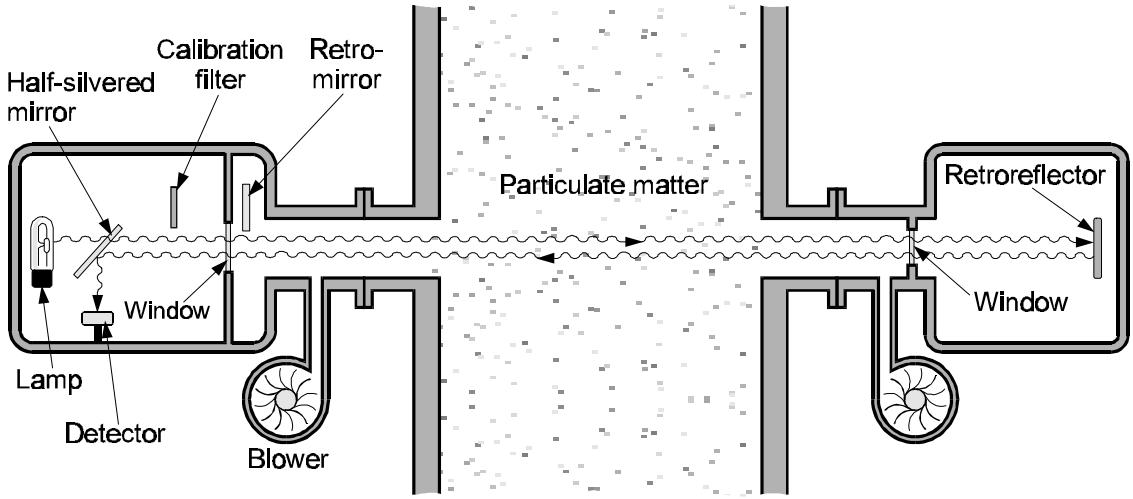

Figure 3-6. Double-pass transmissometer.

compensate for these types of factors is inherent to the analytical technique. Consider for example, an optical infrared dispersive device. Variations in the effluent temperature change the gas density and thus the number of molecules present in the adsorption path at a particular concentration. Sensing of the effluent temperature is necessary to distinguish between changes in infrared adsorption due to concentration variations or due to temperature variations. Also, the actual spectral adsorption of infrared radiation varies as a function of temperature for different compounds. Thus, effluent spectra and reference spectra obtained at the same temperature must be "matched" in order to analyze the data accurately.

Temperature compensation for spectral adsorption can be performed by obtaining a series of spectral libraries at different temperatures on a controlled calibration facility. This approach has been used for infrared gas filter correlation devices and UV differential adsorption instruments. A different approach has been developed for dispersive infrared measurements that relies on HITRAN reference spectra and mathematical transformations to adjust the reference spec-

tra to correspond to the effluent temperature (Lang, 1991).

A major challenge for in-situ analyzers is the ability to verify proper calibration while the instrument is installed. Because the effluent is present, determining if the zero concentration value is correct is difficult. Various schemes have been used to attempt to overcome this problem. Calibration at saturation (very high concentration) rather than at zero, incremental calibrations superimposing gas filters and the effluent gas, and using concentric slotted pipes or other mechanical means to temporarily provide a zero calibration have all been used with varying degrees of success. An in-situ monitor with a slotted probe for effluent measurements and gas audit cell to facilitate quality assurance checks using external calibration gases has been developed. The probe design ensures that calibration gases are at the same temperature as the effluent gases for reasons previously discussed. Another single-pass cross-stack in situ analyzer uses a zero pipe to provide a reference optical path, free of adsorption, and a flow-through gas cell to facilitate the introduction of calibration gases. This instrument is an ultraviolet differential absorption instrument that can measure many gases including SO_2, NO_x, H_2O, NH_3, volatile organic compounds, and Hg (vapor).

In-situ devices typically isolate optical components from the effluent stream by using optical windows and an air-purge system that provides a flow of filtered ambient air across the optical surfaces and then into the stack. The analytical technique must be insensitive to any dust accumulation on the optical surfaces; otherwise, the decrease in light transmittance might be interpreted as an increase in pollutant concentration. The sample interface system must be adequate to ensure that dust accumulation is held to acceptable levels between maintenance intervals. Otherwise, the intensity of the optical beam may be diminished to the point where deterioration in signal to noise levels reduces the accuracy of the measurement results. Optical windows must be fabricated of materials that transmit the measurement wavelengths and are resistant to chemical reactions and mechanical deterioration.

3.1.3 Analytical Techniques

The analysis of hazardous air pollutants (HAPs) is not as straightforward as the measurement of the inorganic, criteria pollutants such as SO_2 and NO_x. Because of the wide variation of properties associated with the different classes of HAPs (organic compounds, metals, particulate matter), numerous methods are used to analyze the flue gases after they are sampled by the extractive or in-situ systems. These include gas chromatographic methods used for analyzing organic and inorganic compounds, light absorption and scattering methods used for particulate monitoring, and atomic emission spectroscopic methods used for the analysis of metals.

Due to the difficulties of analyzing multiple hazardous air toxic materials in a flue gas matrix, chromatographic separation techniques often are employed to separate compounds in a gas mixture. Compounds can then be measured individually by some type of detector, such as a flame ionization detector (FID), thermal conductivity detector (TCD), photoionization detector (PID), or electron capture detector (ECD). Other techniques where separation of the gaseous compounds is not performed, such as Fourier transform infrared (FTIR) spectroscopy, ideally identify and quantify all of the compounds in the sample at the same time. A combination of separation and analytical methods such as gas chromatography and mass spectrometry (GCMS) can also provide for a versatile analytical system. This section contains a review of hazardous air pollutant monitoring methods that are commercially available, describing principles of measurement.

3.1.3.1 Gas Chromatography

Gas chromatography typically is used to isolate the individual components of a mixture of organic and inorganic compounds from each other for subsequent identification and quantitative analysis. Chromatographic separation principles are used in EPA reference methods (EPA, 1996b). For example, a detailed gas chromatographic procedure is specified in EPA Method 106 for vinyl chloride, EPA Method 16 provides for the chromatographic separation of four total reduced sulfur (TRS) compounds, and Method 18 gives general sampling and analytical criteria for gas chromatographic testing. The use of gas chromatography for CEM regulatory applications has been limited; however, many installations are found in the process industries where the equipment is used to monitor production operations (Villalobos, 1975; Coleman, 1996). Particularly in the refining and chemical industries, resources necessary to provide for continuous, accurate data are made available because of the importance of that data for determining process efficiencies.

3.1.3.1.1 Basic Principles of Gas Chromatography. Gas chromatography is based on the selective distribution of compounds between a stationary phase and a mobile phase (carrier gas). In this process, the moving gas phase passes over a stationary material that is chosen to either absorb or adsorb the organic

molecules contained in the gas. In gas chromatography, the stationary material or phase can be either a liquid or a solid and is contained in a long, thin tube referred to as a "column." Columns are made of fused silica, glass, or stainless steel and vary in diameter depending upon the type of column packing (the stationary phase) used.

In an ideal column operated under ideal conditions, each molecular species will exit the column at a different time. The equilibration between the individual compounds and the column stationary phase is a function of 1) the compound's affinity for the stationary phase relative to the mobile phase, 2) the temperature of the column, and 3) the flow rate of the mobile phase carrier gas. Individual molecules are separated in the column by undergoing a series of equilibrations between the stationary and mobile phases (Giddings, 1965). Selecting the appropriate column and optimizing the column temperature and carrier gas flow rate should enable separation of the gas sample into its individual components.

3.1.3.1.2 Gas Chromatograph Components. A simple chromatographic system is composed of a device for injecting the sample into the column, a carrier gas to sweep the sample gas through the column, a column oven, and a detector. The carrier gas, such as helium or nitrogen, sweeps the sample from the injection area into the heart of the system, the column. The detector at the end of the column ultimately produces an electrical signal that is proportional to the quantity of molecules present (Figure 3-7).

Separated peaks are identified and quantified by comparison of their peak areas to a calibration with known gas standards. However, for an unknown sample mixture, one will not know what standards to include in the calibration unless some prior knowledge of the flue gas composition is available. In that case, one must use techniques such as infrared, ultraviolet, or mass spectrometry to first identify the compounds and then select the column and appropriate standards.

3.1.3.1.3 Detectors. The separation performed in a chromatographic column is sensed by a detector and recorded. Any detector designed for use in a gas chromatograph system must have a high sensitivity for low concentrations of organic molecules, and a rapid response time. Many detectors are available that meet these requirements; the most common in source monitoring applications are the flame ionization detector (FID) and the photoionization detector (PID). In more sophisticated applications, optical spectroscopic or mass spectroscopic techniques are employed.

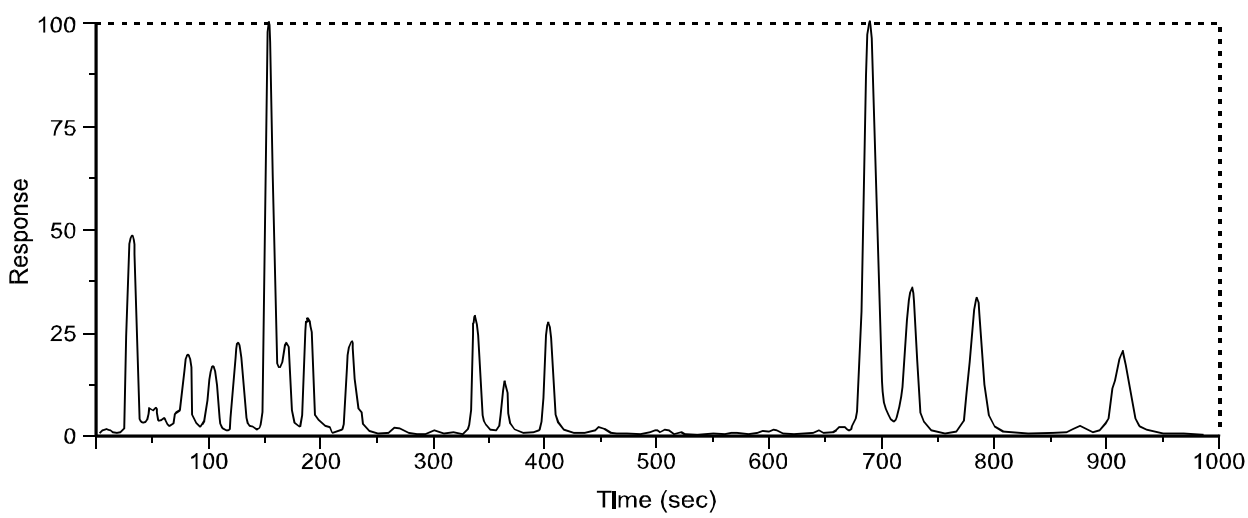

Figure 3-7. Gas chromatogram.

Flame Ionization Detectors. The flame ionization detector is capable of sensing most organic compounds and, because of its relatively high sensitivity, has become widely used in environmental applications. In an FID assembly, the column effluent enters the base of the burner, is mixed with hydrogen, and the mixture burned in a jet with oxygen at a temperature of about 2,100°C. Ions and free electrons are produced by the flame, which increases the current sensed by an electrometer. The current is approximately proportional to the number of carbon atoms entering the flame. However, the response of the detector is slightly different for different types of organic compounds. As a result, the detector must be calibrated for the compounds being studied to achieve the best accuracy (Figure 3-8).

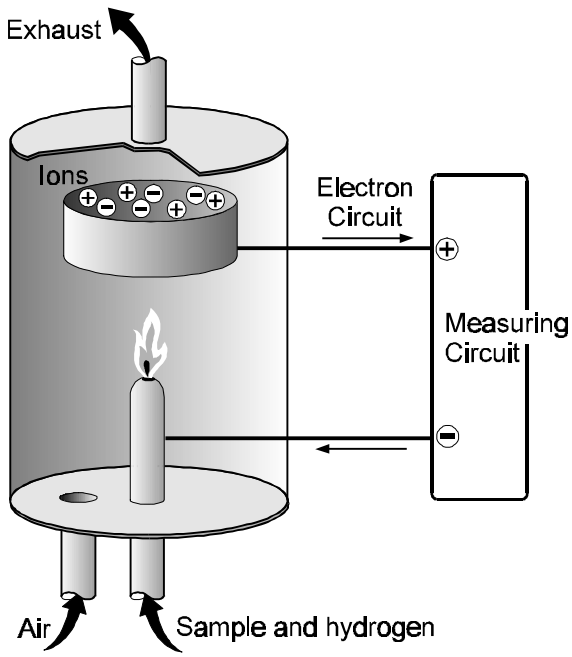

Figure 3-8. Flame ionization detector.

The FID is convenient to use in source sampling situations since it does not respond appreciably to gases such as O_2, N_2, H_2O, CO, SO_2, and NO. However, organic compounds that contain nitrogen, oxygen, or halogen atoms may give a response reduced from that seen from hydrocarbons. In a photoionization detector, organic molecules are ionized by ultraviolet light:

$$R + h\nu \rightarrow R^+ + e^-$$

where R^+ is the ionized organic compound and $h\nu$ represents the energy of the light having frequency ν (h = Planck's constant).

Photoionization Detectors. A typical PID incorporates a UV lamp suitable for ionizing the analytes of interest and a pair of electrodes to measure a current proportional to the concentration. Again, the major components of the flue gas such as O_2, CO, N_2, CO_2 and H_2O are not ionized.

PIDs are used in conjunction with gas chromatographs or alone as portable analyzers used in EPA Reference Method 21 for detecting leaks in petroleum refineries (Hellwig, 1986). They offer advantages over FID detectors in that hydrogen is not required and methane (a gas that is not required to be monitored) is not ionized and therefore not detected by a PID (Hewitt, 1981). Depending upon the instrument, compounds detected by PIDs include: aliphatic and aromatic hydrocarbons, halogenated organics, alcohols, ketones, aldehydes, ethylene oxide, vinyl chloride, and inorganic compounds such as arsine, phosphine, and hydrogen sulfide. In general, com-pounds that have ionizable electrons can be detected.

Electron Capture Detectors. The electron capture detector (ECD) is selective for certain groups of organic compounds such as those containing halogen atoms or nitro groups. The electron capture detector works by using a radioisotope treated electrode that emits high energy electrons as it decays (β emission). The β electrons react with the carrier gas to produce secondary, free electrons which move to a positively charged anode to generate a current through the system. When the nitrogen carrier gas contains electron-absorbing molecules such as the halocarbons, the electric current will be reduced because the flow of free electrons will be reduced by the absorption.

The ECD is more sensitive for specific groups of compounds than is the FID, but the response can again vary from compound to compound. Issues associated with the transport, storage, and disposal of the radioactive material have also been of some concern.

Other Detectors. Other types of detectors are used in chromatographic systems applied to environmental monitoring. Many of these are species specific like the ECD. Among these are the Hall electrolytic conductivity detector (HECD), used for halogen, sulfur, or nitrogen compounds; the flame photometric detector (FPD) used for sulfur or phosphorus compounds; and the alkali flame detector (AFD), used for nitrogen and phosphorous compounds.

Mass Spectrometers used as Detectors. Increasing demands for the analysis of trace levels of toxic ma-

terials require new approaches to increase the resolving power and sensitivity of chromatographic systems. Multiple detector combinations have been used, but combining the gas chromatograph with a mass spectrometer used as a detector offers one of the most powerful combinations for both identification and quantification. This GCMS combination has been the basis for most low concentration testing for many years in air pollution monitoring and is seeing increasing application (Peeler, 1996).

In the technique of mass spectrometry, molecules are ionized by high energy electrons, or by other means (such as chemical or photoionization process), and the resultant molecular ions and ion fragments are separated according to their mass to charge ratio (m/e). This separation produces a "mass spectrum" of the different ions generated from the fragmentation caused by the high energy electron-molecule collisions (Figure 3-9). The mass spectrum is unique to the original molecule, as is an infrared or UV spectrum.

Mass spectrometers are distinguished by the type of mass separator used. Magnetic deflectors, time of flight separators, quadrupole mass analyzers, and ion-traps have all been used. For environmental applications, the quadrupole mass analyzer is used most commonly. In this technique, an oscillating field of electromagnetic energy filters ions having a specific mass to charge ratio (Figure 3-10).

The linear quadrupole mass analyzer operates by oscillating the ions in a radio-frequency field superimposed on the charged cylindrical rods. Most of the ions will oscillate with increasing amplitude and strike the rods, but one set of rod voltage and radio-frequencies will exist where the ions of a specific m/e ratio will be able to pass through to the detector. The radio-frequency or rod voltage is therefore scanned to obtain the mass spectrum.

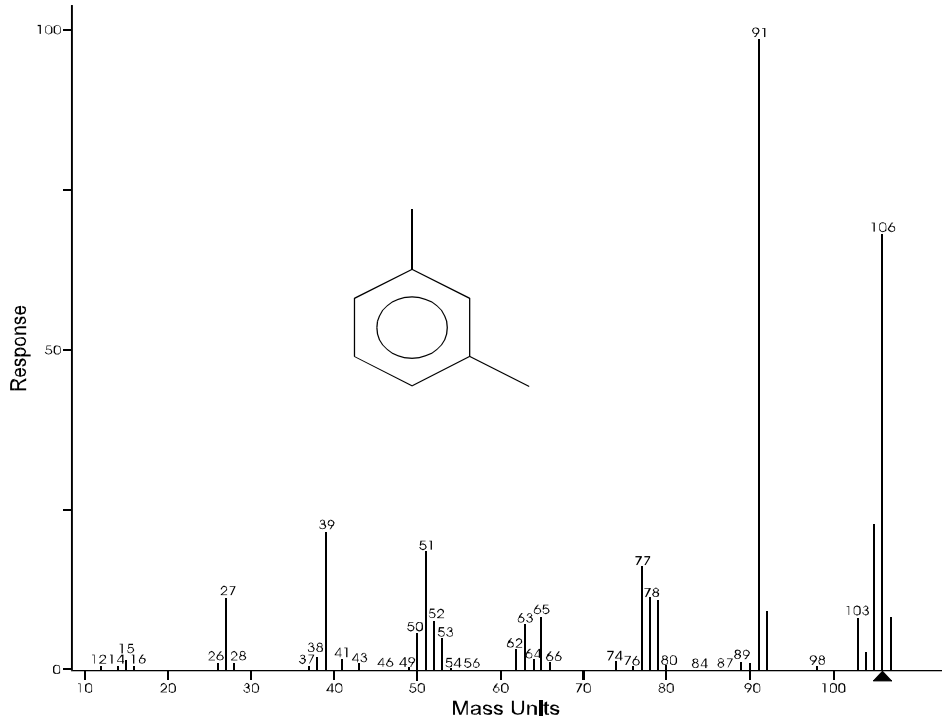

Figure 3-9. Mass spectrum of meta-xylene.

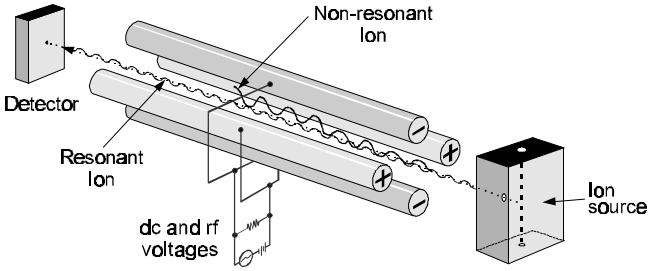

Figure 3-10. Linear quadrupole mass analyzer.

The mass analyzers used in mass spectrometer systems are operated under high vacuum ($1x10^{-5}$ or $1x10^{-6}$ mm Hg) to minimize scattering by collision with other ions and gas molecules. This requires some type of vacuum pump and a system design that can maintain a proper vacuum. The cleanliness of the system is important also, and adsorbed materials on the walls of the analyzer can lead to the introduction of interfering ions. These requirements can lead to problems in source monitoring applications and must be overcome to achieve consistent results.

The GCMS combination provides both qualitative and quantitative information since it looks at each different type of molecule separately as it comes off of the column (Figure 3-11). The GCMS output gives a three-dimensional plot over time, giving information both on the type of compounds in the sample and the amount present.

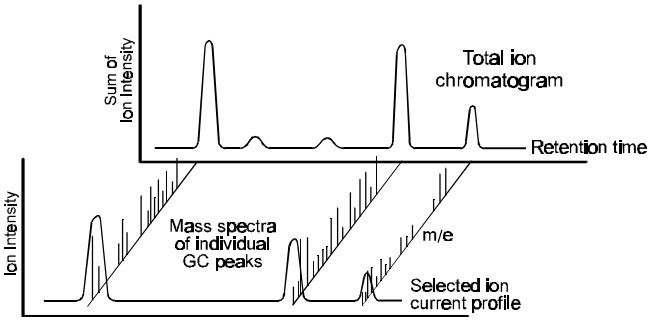

Figure 3-11. Total ion current chromatogram.

Mass spectrometers and GC mass spectrometers have been applied to monitor criteria pollutants on a continuous basis (Bartman, 1990; Harlow, 1990) and are being used increasingly in the process industries to monitor a wide range of HAPs. Their use in environmental monitoring has focused primarily on the ambient monitoring of hazardous waste sites or leak monitoring in the chemical and petroleum industries. However, GCMS systems are being used increasingly in short term source tests to determine baseline HAP emissions (Campbell, 1991; Peeler, 1996). These tests often point out areas where changes in process operational efficiencies can lead to emissions reductions. The design of continuous sampling and operating strategies has been a challenge in many GCMS applications, but these challenges are being met (Kinner, 1993; Haile, 1995).

3.1.3.2 Total Hydrocarbon Analyzers

Depending upon the process and the mixture of compounds present, a preliminary characterization of the emissions frequently is necessary to optimize chromatographic and other instrumentation. The speciation and quantification of volatile organic compounds can be very expensive. Although such knowledge may be useful for process control and optimization, such information is not needed for some facilities, such as incineration sources. In these or other cases, a total hydrocarbon analyzer may be sufficient for monitoring the sum of individual VOC emissions.

Total hydrocarbon analyzers direct the sample to the detector without column separation. The sampling system may be either cold or hot as discussed previously. The hot FID systems provide a more accurate measure of the THC content; however, they are more difficult to operate continuously (see Cone, 1990 for a discussion of this issue). Early hot FID systems frequently incorporated design flaws where organic compounds and water could condense at cold spots in the analyzer plumbing and obstruct the flow of gas or interfere with the control of the sample pressure (Cone, 1990). Such problems are avoided in newer systems.

The FID is the industry standard for total hydrocarbon (THC) analyzers, and is in fact specified as the required detector for use in THC monitoring systems installed in boilers and industrial furnaces that burn hazardous waste and for those installed in sewage sludge incinerators (40 CFR 266). Certification criteria for approving some THC analyzer installations have been simplified by eliminating relative accuracy test criteria and using audit gases to check the system performance (40 CFR 266 Appendix IX and 40CFR 503 Subpart E). These certification criteria are discussed in Chapter 7 of this Handbook.

3.1.3.3 Light Absorption Techniques

Light absorption techniques have been used traditionally to monitor criteria pollutants such as CO, NO, SO_2. The techniques can also be used for the environmental analysis of organic compounds and have been applied extensively both in research laboratories and in process industries. The light absorption

methods are based upon the phenomenon that molecules will absorb light energy to rotate, vibrate, or change their electronic patterns in characteristic ways. This absorption occurs only for wavelengths of light that are in tune with the properties of the molecule (see for example, Willard, 1987).

Light absorption techniques are categorized as being dispersive or nondispersive. In the dispersive methods, the spectral absorption of a molecule is measured over a limited region of the electromagnetic spectrum. A spectral absorption pattern, or spectrum, characteristic of the molecule is obtained that can be used to both identify the molecule and determine the concentration of the molecule in the sample. Scanning spectrometers and Fourier transform infrared (FTIR) spectrometers generate such spectra.

In the nondispersive methods, the so-called nondispersive infrared (NDIR) and nondispersive ultraviolet (NDUV) techniques, the spectrum is not scanned. Here, a wavelength where light energy is absorbed is used as the basis for the instrument design. Such instruments are constructed quite simply.

Differential Absorption Spectroscopy. A typical nondispersive method measures light absorption at two wavelengths, one where the molecule absorbs energy and one where it does not (Figure 3-12).

This particular technique has been called differential absorption spectroscopy or differential optical absorption spectroscopy (DOAS). The ratio of the intensities, I/I_o, at the two wavelengths is known as the transmittance and is related exponentially to the concentration of the gas that absorbs light energy at the wavelength, λ.

In the nondispersive, differential absorption technique, I_o is obtained from the detector when it responds at the wavelength λ_o. In many criteria pollutant monitors, the value of I_o is obtained instead by using a reference gas or reference gas cell that does not absorb light energy at the measurement wavelength, i.e., $c = 0$, which gives $I = I_o$ when the light passes through the reference cell.

The differential absorption spectroscopic technique has been used for many years. Early instruments used filters to select the light wavelengths. Current methods applied to discriminate between wavelengths include:

1. Optical filters
2. Diffraction gratings and photo-diode arrays
3. Diffraction grating and moving slits
4. Diode lasers

These different techniques are illustrated in Figure 3-13.

Numerous optical filtering instruments operating in the infrared region of the spectrum have been developed for the measurement of gases such as CO, CO_2, and the criteria pollutants, using "Luft" type or "microflow" detectors. These detectors monitor pressure changes due to differential absorption of light by molecules contained in the detector cell (Jahnke, 1993).

An optical filtering instrument using a photoacoustic detector, developed for ambient and industrial applications, has been used in conjunction with dilution systems to monitor organic compounds (Sollid, 1996). This detector monitors acoustic waves resulting from absorption of light by molecules directly in the sample cell.

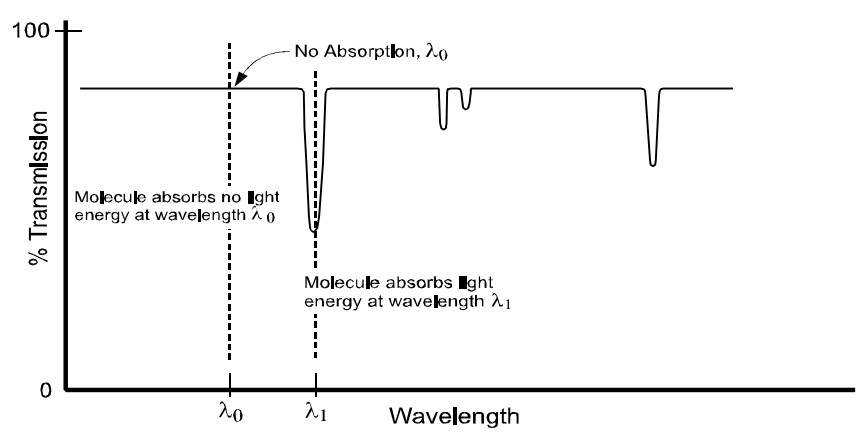

Figure 3-12. Transmission spectrum - example illustrating the differential absorption technique.

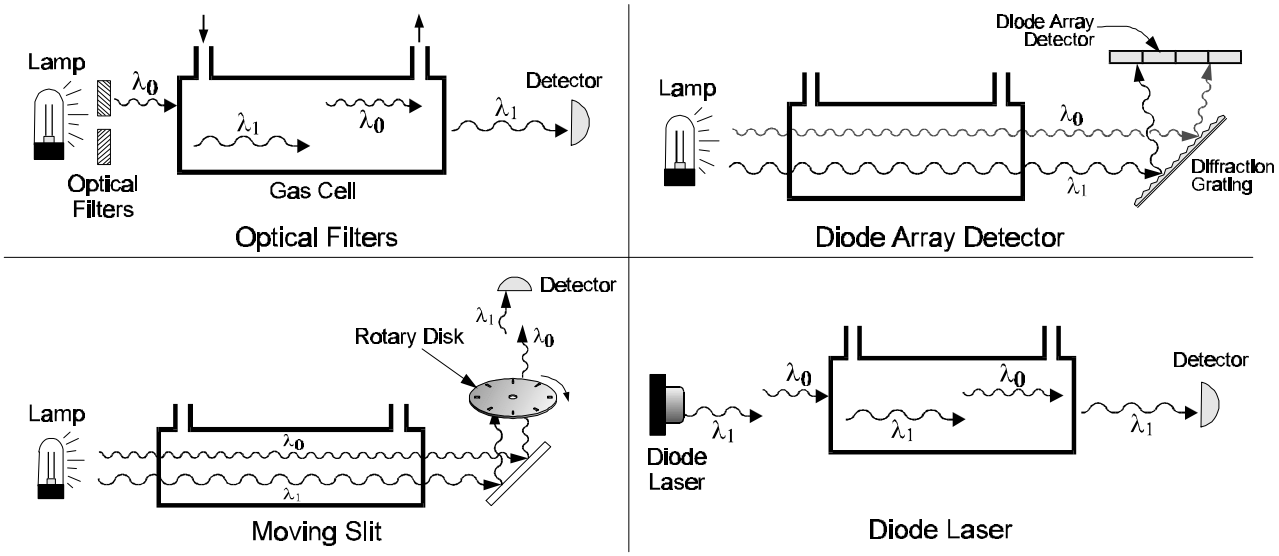

Figure 3-13. Differential optical absorption techniques.

A recently commercialized technique applied in the UV region of the spectrum employs a diode array detector to discriminate between the different wavelengths (Biermann, 1990). A diffraction grating is used to disperse the different wavelengths of the light source, and signals received from different segments of the detector are used to determine the transmittance. Moving slits, or slits on a rotating disc can be used to scan the spectrum of light dispersed by a diffraction grating. The moving slit selectively allows light of different wavelengths to reach the detector to determine the transmittance. The method has been applied to measure criteria pollutants, ammonia, mercury vapor, and some organic compounds. The newest commercialized application of the differential absorption technique employs diode lasers to measure HF and ammonia. By changing the temperature of a diode laser, it can be made to emit light at different wavelengths. Typically, the diode is attached to a Peltier cooler, and by changing the temperature by a few millidegrees, one can shift the wavelength from λ to λ_o. The transmittance can then be determined from the detector intensities as the laser light alternates between absorbing and nonabsorbing wavelengths. The close-coupled sampling system used in conjunction with this analyzer is shown in Figure 3-5.

Differential absorption techniques applied in the UV-visible region of the spectrum can be used to measure halogens such as Cl_2 and F_2; aromatic compounds such as benzene, xylene, and toluene; carbonyl compounds such as acetaldehyde; and inorganic compound such as ammonia, chlorine dioxide, hydrogen sulfide, and nitric acid, and carbonyl chloride (phosgene). Although all of these gases can be analyzed by the differential absorption technique, only a few, such as ammonia, HF, and hydrogen sulfide, have had commercial instruments developed for their measurement.

A commercial instrument must be optimized for the compound being measured. The proper wavelengths must be selected to minimize the effects of interferences; calibration methods must be developed; appropriate filters, lasers, or detectors must be selected or developed, and the appropriate sampling interface must be selected to avoid loss of sample and provide for the proper instrument sensitivity. This process requires a program of research and development on the part of the instrument manufacturer that may require considerable capital investment. However, the market for non-criteria pollutant monitors is small and, in general, does not justify costs for optimizing a single-species monitor. The technology is available for developing needed instrumentation, but the incentive is often not sufficient to warrant investment in the development.

FTIR Spectroscopy. The FTIR spectroscopic method is a dispersive technique where an absorption spectrum over a limited spectral range is obtained for all infrared light absorbing compounds contained in the sample. Most commercially available FTIR analyzers operate in the mid-IR region (400 cm^{-1} ~ 4000 cm^{-1}). The technique allows for the measurement of more

than one gas species at the same time and is sufficiently general that it can be used at a wide variety of sources. For these reasons, the technique has generated interest for a number of non-criteria pollutant monitoring applications.

With the advent of compact and powerful microprocessors, the computation demands of such methods as mass spectrometry and Fourier transform infrared spectroscopy can be handled easily in lower-cost field instrumentation. Significant advances have been made in such instrumentation since the early 1990's to the point where the continuous measurement of hazardous air pollutants has become practical.

In the method, infrared radiation typically is directed through a sample cell as in the simplest of non-dispersive infrared spectrometers. In contrast to using an optical filter or a laser to transmit light at a specific wavelength through the cell, the FTIR source transmits light over a broad range of wavelengths. The IR radiation is modulated with an interferometer before the light enters the sample, that is, the light energy at each wavelength is varied from zero to some maximum value by using a mirror that moves over a small distance, x (in FTIR systems, a laser is used to monitor the mirror position). This all results in generating an "interferogram" (an interference spectrum) that shows the net intensity of the absorbed radiation at the detector, versus the mirror position, x. The interferogram contains much information, but not in a particularly usable form. The system microprocessor applies a mathematical technique called the "Fourier transform" to recalculate the detector intensity as a function of wavelength instead of as a function of the mirror position x. This is what is desired, a complete absorption spectrum over the wavelength region of the spectrometer.

Once the dispersed absorption spectrum information is obtained, the analyzer microprocessor must then extract both the qualitative and quantitative information desired. To do this, "library spectra" of the compounds being measured must be stored in the computer and referenced against the test data. The library spectra are obtained by analyzing samples of the compounds at known concentrations with the FTIR spectrometer. Various mathematical techniques are used in this process to obtain concentrations in parts per million.

The FTIR technique involves the application of numerous technical and mathematical tricks, however, its operation can be summarized simply as follows:

IR light is emitted over a broad spectral range

↓

Mirror moving over distance x, modulates light

↓

Modulated IR light is absorbed by molecules in the sample cell to create "interferogram"

↓

Interferogram converted by Fourier transform to absorption spectrum

↓

Library spectrum matched to test data to give concentration in ppm for each compound being measured.

The method can be relatively straightforward if the compounds in the sample do not absorb light in the same wavelength regions, i.e., if their spectral "fingerprints" are not similar. If these fingerprints are similar, or overlap, the method becomes more difficult to apply. This is the case when the sample contains hydrocarbons or other organic compounds of similar structure. Also, because water and/or carbon dioxide are often present in the sample at percent levels, discriminating between the spectral absorption of organic compounds at ppm levels within the broad spectral absorption regions of these two gases becomes more difficult.

The attraction of the FTIR technique is that it is a multi-component technique and reference spectra can be used for calibration. This does not mean that the FTIR technique does not have to be optimized for a given application. Each new use of the instrument requires the incorporation of library spectra of the compounds of interest over the range of concentrations expected at the source. Suitable reference spectra may have been generated by the analyzer manufacturer for similar applications, or they may be obtained from the EPA Emission Measurement Center (EMC) library or commercial FTIR libraries. If appropriate reference spectra have not been generated, individual spectra of the target gases at known concentrations and specific temperatures and pressures must be obtained.

The major differences between FTIR systems marketed for environmental applications are in the design of the optical bench used to create the interferogram. A major design goal for the moving mirror is to make it vibration insensitive for field use, and such designs as sliding wedges or flexing parallelogram arrange-

ments have been developed to meet this objective. A competing design goal relates to the distance that the mirror moves. The greater the distance, the greater the special resolution of the instrument. Other differences between instrumentation rest in the mathematical techniques used to extract the concentration data from the interferogram Fourier transform generated spectrum.

One of the more important decision-making factors associated with the FTIR technique is whether it has been applied successfully at a similar source for measuring similar compounds. With its increasing popularity, increasing numbers of reports are being published of successful applications. Examples have been given for monitoring criteria pollutants at coal-fired electric utilities (Dunder, 1994), solvent emissions at industrial coating facilities (Ayer, 1996, Bartak, 1996, Stock, 1996), for monitoring formaldehyde, methanol, phenol, and carbonyl sulfide (Kinner, 1995, Geyer, 1996), cyclohexane, ammonia, formaldehyde, methanol, carbon monoxide, methane at a high temperature, high moisture source (Reagen, 1996), hydrochloric, hydrobromic, and hydrofluoric acids at municipal waste incinerators and HCl at industrial process plants (Vidrine, 1993). Numerous other examples are given in the literature.

3.1.3.4 Ion-mobility Spectrometry

Ion-mobility spectrometry is a technique similar to the time-of-flight technique used in mass spectroscopy, except that the analyzer operates at ambient pressure and the ions drift to the detector in an electric field. Commercial ion-mobility instruments are single component instruments and have been optimized for the measurement of HF, HCl, NH_3, hydrogen peroxide (H_2O_2), hydrocyanic acid (HCN), Cl_2, and chlorine dioxide (ClO_2). A wide range of other gases, such as aldehydes, ketones, amines, polyaromatics, etc., are said to be measurable by this technique (Bacon, 1993). However, specific instruments for these gases have not been advertised commercially for source monitoring applications.

In this method, a radioactive source ionizes the molecules, which then drift through an electric field to an electrometer (Figure 3-14). The mobility (drift velocity/electric field strength) of the ions through the field is dependent upon the charge, mass, and shape of the molecule. An electronic shutter grid is used as a "gate" to periodically allow ions to enter the drift space. Smaller ions have a greater drift velocity than the larger ions and reach the electrometer earlier. The resultant instrument signal, showing the different ion signals as a function of time, appears much like a chromatogram and could be called an “ionogram.“ Concentrations are determined from the peak heights.

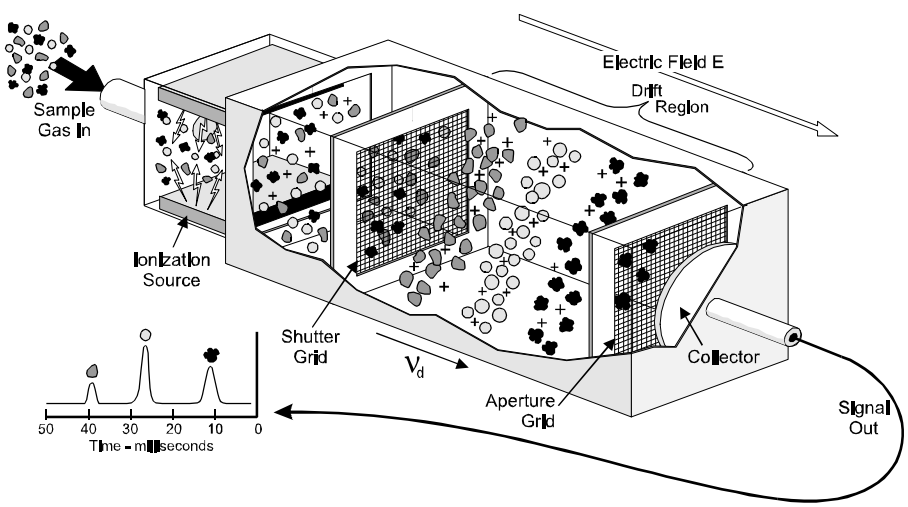

Figure 3-14. Ion-mobility spectrometer.

The ion mobility spectrometer does have some problems in discriminating between different compounds. These interference problems are resolved by several stratagems: 1) introducing chemicals ("dopants") into the gas stream to inhibit the ionization of interfering compounds, 2) using a permeation membrane to exclude or retard interfering compounds, 3) changing the electric field polarity to select positive or negative ions at the detector, or 4) scrubbing out interfering compounds before they enter the spectrometer. The research necessary to optimize the technique for specific compounds has limited the application of the method.

A related method to ion-mobility spectrometry is field-ion spectrometry. In this method, molecules are ionized by a radioactive source or are photoionized using a UV lamp. The method uses an oscillating electric field to neutralize interfering ions and allow ions of interest to pass through the drift tube to the electrometer. Field-ion spectrometry is said to be able to measure a wide range of organic compounds at part per billion levels; however, the method has been introduced only recently and is just becoming commercialized (MSA, 1996).

3.2 Monitoring Systems for Particulate Matter

3.2.1 Sampling Problems for Particulate Matter

Continuous monitoring of particulate matter emissions presents special sampling problems that are not encountered in the measurement of gaseous pollutants. These include resolving problems associated with 1) particulate stratification, 2) wet gas streams, and 3) particle deposition in extractive sampling systems.

3.2.1.1 Particulate Stratification

Particulate matter stratification across a stack or duct cross-section, including both variation in mass concentration and variation in particle size distribution, occurs in many instances and must be considered in the development of a particulate monitoring program. The extent of these effects are dependent upon the source application and the type of monitoring equipment that is used to sense the particulate concentration. In addition, effluent flow rate stratification is also likely to occur at most sampling locations and this may complicate the measurement of particulate matter mass emission rates.

Particulate matter stratification is due to the influence of inertial and viscous forces acting on the particles as they move with the gases through the effluent pathway. The significance of these forces is dependent on the flow stream characteristics and the specific bends, turns, flow obstructions, and length of the effluent ducts between flow obstructions. In the simplest terms, the particles within the effluent stream have much greater mass than the gas molecules and are thus subject to much larger inertial forces where changes in direction of the flow stream occur. Obviously, the extent of these forces depend on the size and density of the particles.

Where inertial forces cause particles to move in a direction different than the gas velocity, viscous forces are also exerted on the particles. These forces are dependent on the relative velocity between the particle and the gas stream and the aerodynamic size and mass of the particles. As a rough rule of thumb for industrial emission air flows, particles having a diameter smaller than 1 µm can be assumed to behave much like a gas and particles having a diameter 10 µm or larger are expected to exhibit substantial inertial behavior. Stratification across the flow stream is expected for 1 to 10 µm particles. The particle size distribution depends on the type of industrial process and the type and efficiency of control equipment that is installed.

Taken together, the above factors create particulate matter stratification at the majority of monitoring locations. To estimate or forecast the specific impact of these factors is infeasible based on theoretical models. To characterize the stratification profile would require obtaining particulate concentration data at many points in the duct. This would be very difficult and cost prohibitive. Furthermore, stratification profiles are likely to change 1) with varying flow rates corresponding to process rate changes, and 2) over time as a result of variations in control equipment performance, process operation, and fuel or raw materials. Decisions regarding monitor location can not be based on exact knowledge of the particulate matter stratification profile but instead must be based on an understanding of basic principles and the use of limited measurement data to make an informed choice. Ultimately, the acceptability of a particulate matter monitoring location is determined when the monitoring measurements are correlated with the results of manual gravimetric measurements. A non-representative monitoring location will not correlate well with manual test results that are obtained by traversing the entire duct cross section (see Chapter 7).

The effects of particulate matter stratification on duct concentration measurements cannot be completely eliminated. However, the effects can be minimized by selection of an appropriate measurement tech-

nique and selection of a measurement location and measurement point or path that will maximize the opportunity to acquire representative samples.

For sampling locations downstream of high efficiency control devices, very low particulate concentrations are expected except during malfunctions or certain periods of start-up or shut down when the control device must be bypassed. In most cases where high efficiency control devices are used, or where a stringent particulate matter standard must be met, control of large particles is reasonably assured and the remaining particle size distribution contains mostly small particles. In such cases, the effects of stratification are minimized since the small particles behave much like gas molecules and a representative sample can be obtained following simple principles described below.

Where higher particulate matter concentrations and larger particles are encountered, greater attention to selecting the measurement location and measurement points is warranted. Selection of a measurement location in a long straight run of duct or as far from flow disturbances as possible is a good first step. Pitot tube traverses should be conducted to construct velocity profiles at various operating loads or process rates. If no basis for estimating the particle size distribution exists, measurements should be made at several points across the duct cross-section using cascade impactors or other in-situ particle sizing devices. The resulting particle size information may be useful both in selecting 1) the type of monitoring equipment and 2) the measurement point or path for the monitoring device.

Another approach to selecting a particulate sampling location relies on the use of the monitoring device. "Portable" transmissometers with slotted probes have been manufactured and can be used (within the physical limits of the probe length, duct wall thickness, and duct dimensions) to perform measurement at a number of locations across the duct. Some in-situ light scattering devices can vary the area or volume in which particulate matter is sensed by changing the angle between the light source and the detector. For single point extractive systems or point monitors, varying the insertion depth of the probe or making measurements in several sampling ports may be possible. When attempting to use any monitoring device to detect stratification, the effects of temporal variations that occur during the experiment must be minimized. Ideally, two instruments should be used, one remaining at a fixed reference point and the other moving to various traverse points. Where the use of two instruments is impractical, care must be taken to maintain steady source operating conditions and sampling must be performed for a sufficient period at each point to characterize the normal fluctuations in emissions over time at each process rate of interest.

Good practice in all cases would generally require that point monitoring systems be located within the central portion of the flow stream (i.e., away from duct walls to avoid boundary layer effects), and at a point of average velocity in the flow stream with the flow direction parallel to the duct or stack walls. Cross-stack optical path measurement devices should be oriented so that the beam passes through the stratification gradient rather than parallel to the gradient. Such an orientation is much less susceptible to non-representative sampling due to the influence of stratification. Orienting the monitor path so that the light beam is in the plane defined by an upstream bend is an example of this approach. Also, locating a cross-stack monitor so that the light beam passes through the central area of the stack or duct minimizes the effects of boundary layers and eddy flows near the walls. Requirements for locating opacity monitors and examples for commonly encountered duct configurations are found in Part 60, Appendix B, Performance Specification 1 (PS1) (USEPA, 1996) which represent a consistent approach based on "engineering judgment." These principles and the requirements of PS1 generally should be followed for path sampling devices in the absence of other applicable criteria (or information) for a particular application. However, the PS1 location criteria should be considered as only a guide. Actual measurement data or other specific information should be given greater credence.

3.2.1.2 Particulate Monitoring In Wet Stacks

Particulate monitoring downstream of wet scrubbers or process streams where water droplets are present at the monitoring location limits the selection of monitoring equipment and may require that additional steps be taken. Some particulate monitoring devices can not be used where liquid water droplets are present. For example, charge-contact (triboflow) devices cannot be used. Transmissometers or other optical devices can not distinguish between water droplets and other particles and therefore can not be used without additional modifications to the source or effluent pathway. In the United States, new source performance standards (40 CFR 60.13(I)(1) (USEPA, 1996b) and state regulations provide for opacity monitoring exemptions where liquid water are present downstream of control devices because of this interference. However, in Germany, France and other European countries, particulate monitoring in wet stacks is required (Peeler, 1996).

Several options are available for particulate monitoring in wet stacks. Single point extractive systems with heated probes are available from several manufacturers. An extractive light scattering device has been developed with sufficient heating capability to vaporize liquid droplets before they reach the heated measurement cell. This device has been evaluated and tested in Germany (VDI, 1989). Extractive beta gauge systems that also vaporize liquid droplets have been used widely in France for wet gas monitoring.

Alternative approaches that convey a slipstream of the effluent through a heated device to vaporize liquid and which then employ either transmissometers or light scattering analyzers have also been used in Germany and other countries. A heated bypass system has been used with transmissometers for particulate monitoring on refuse incinerators and power plants in Germany. These systems have been evaluated and approved by TÜV Rheinland (TÜV Rheinland, 1985).

A similar approach has been developed for use with light scattering instruments normally used as in-situ devices. In this case, the slipstream is extracted from the stack, heated to vaporize droplets in an electrically heated cyclone, and then passed through a small heated duct with an installed light scattering analyzer to facilitate the measurement. This system has been used in Germany for several years and has been shown to perform successfully in the United States at a hazardous waste incinerator having a saturated exhaust stream and low particulate matter concentrations (Joklik, 1995).

The above solutions to monitoring particulate matter in wet stacks still require that comparisons to manual gravimetric tests be performed to correlate the output of the instrument to mass concentration units. Special care is required in performing the manual test methods because most in-stack particulate filtration methods (e.g., Part 60, Method 17) (USEPA, 1996b) can not be used in the presence of water droplets without special precautions and heating to ensure that the filters are not exposed to droplets. When out-of stack filtration methods are used (e.g., Part 60, Method 5) the temperature of the filter should be maintained only slightly above the sample stream dew point.

3.2.1.3 Probe/Sample Line Deposition Problems

Deposition of particulate matter in the sample probe and sample lines is a concern for extractive particulate monitoring devices because particulate matter that is deposited in the probe or sample lines represents a low bias in the measurement results. As with stratification, large particles are the most likely to be affected by probe deposition.

The primary method used to minimize probe and sample line deposition is to maintain high transport velocities through the tubing. Because isokinetic sampling must be performed at the point of sample extraction, the transport velocities are somewhat limited. The internal tubing diameters may be minimized to increase the transport velocity provided that the vacuum is not too high to be overcome by the pump or aspirator and thus create non-isokinetic sampling conditions. Another method of minimizing deposition is to keep the probe and sample lines as short as possible by using a close-coupled system.

A supplier of beta gauge devices has included a probe closure valve at the sample nozzle to protect the measurement system by excluding effluent gases and particulate matter when the monitor is not in the sampling mode and to minimize the effects of particulate deposition in the sample probe. The measurement system is operated for a discreet period to obtain a suitable amount of material on the paper tape. At the end of each of these batch sampling periods, the probe closure valve is shut briefly, creating a vacuum in the sample probe. Then it is opened quickly resulting in a pressure pulse of gas traveling through the probe to re-entrain particles that may have been deposited in the probe and transport lines.

The extent of particulate deposition problems for a specific system can be determined by periodically cleaning the probe and sample lines upstream of the analyzer. If a significant amount of material is found, then the maintenance interval should be shortened and greater cause for concern is warranted.

3.2.2 Continuous Particulate Monitoring

3.2.2.1 Perspectives for Continuous Particulate Mass Monitoring

No U.S. Federal requirements exist for the continuous measurement of particulate mass, although one is being proposed for sources that incinerate hazardous wastes (EPA, 1996). A few states have required continuous mass measurement systems through operating permits or through negotiated agreements; however, these applications have not been extensive. Continuous mass measurement requirements are common in Europe, particularly in the Federal Republic of Germany where both the regulatory and technical sophistication of continuous mass measurement has become quite advanced (Peeler, 1996).

Most continuous mass monitoring methods do not measure mass directly and continuously. A trans-

missometer measures the ability of a flue gas to transmit light. A light scattering instrument measures the light intensity scattered by the flue gas particles. A beta gauge measures the transmission of electrons through a spot of collected particulate matter. All of these commercially available continuous mass monitoring instruments produce an instrument output that is something other than "grams per cubic meter" (or lbs/ft^3). This output, however, can be correlated to the particulate concentration. To continuously measure particulate mass, one first chooses an instrument that measures some property of the particles in the flue gas. The instrument readings are correlated with manual particulate source test method data from a manual reference method. Source and control equipment operating conditions are varied to obtain a range of particulate concentrations. A graph, or other correlation, is then made between the instrument response and the manually determined particulate concentrations.

This correlation results in an "analytic function" that relates the two techniques. The method defines how a statistical correlation is to be made and defines the acceptance criteria for the correlation. The principal concern in obtaining a valid instrument-manual method correlation is to make sure that the procedures are conducted in a representative manner.

1. Comparative measurements should be made at several source operating conditions to obtain a data spread suitable for establishing the correlation.

2. The automated system should measure a sample that is representative of emissions to the atmosphere.

3. The manual sampling method should extract a sample representative of that measured by the instrument system.

4. Measurements should be representative in time. Instrumental and manual measurements should be concurrent. Source operating conditions should remain stable during these measurement periods.

The correlation technique is valid only so long as the conditions under which a correlation was developed are representative of the source operation. Changes in operation that lead to significant changes in particle characteristics or the particle size distribution may affect the slope of the correlation line greatly. Changes in fuel, changes in control equipment, or changes in process operation may contribute to this problem. A new correlation should be developed in such situa-tions.

Standards for continuous mass monitoring systems are used today in the Federal Republic of Germany (VDI, 1980 and FRG, 1992). A more general set of standards has also been prepared by the International Standards Organization (ISO) (ISO, 1995). A variation of the ISO 10155 method has been proposed as Performance Specification 11A for continuous particulate monitoring in the proposed hazardous waste combustor rule (USEPA, 1996). These methods are discussed further in Chapter 7 of this manual.

3.2.2.2 Measurement Techniques

Measurement techniques used in continuous particulate monitor systems are given in Table 3-1.

Of these methods, the light attenuation technique using transmissometers has been the most extensively studied. Extinction-mass correlation methods are used routinely in Germany and occasionally in the U.S. The light scattering and beta gauge techniques are being applied increasingly due to the good correlations that can be obtained.

3.2.2.2.1 Optical - Light Attenuation (Transmissometers). In a transmissometer, the light attenuation or transmittance through the flue gas is determined by passing a light beam across the stack interior. The intensity of the light returning, I, is compared with a previously determined reference signal, I_o, to give the transmittance, $T = I/I_o$.

A transmissometer may be constructed in two ways, using either a single pass system or a double pass system. In a single-pass system, the light crosses the stack directly to a detector. In a double-pass system (Figure 3-6), the light crosses the stack twice. The transceiver assembly on the left houses both the light source and light detector. By reflecting the projected light from a mirror located outside of the transceiver window, systems can be designed easily to check all of the electronic circuitry, including the lamp and photodetector, as part of the operating procedure. Most transmissometer systems include some type of air purging system or blower to keep the optical windows clean.

The way in which a transmissometer is used can affect its design. If the transmissometer data are to be correlated with particulate mass, red or infrared light may be more appropriate than using visible light as in opacity monitors. The smaller particles ($< 5\ \mu$m in diameter) contribute greatly to the opacity but not

Table 3-1. Automated Measurement Methods for Particulate Matter

Physical Basis	Technique
Optical	Light Attentuation (Transmissiometers) Light Scattering
Nuclear	Beta Ray Attenuation
Electrical	Contact Charge Transfer
Electromechanical (Loaded Oscillator)	Piezoelectricity Cantilevered Beam

to the particulate mass loading of the flue gas. Red light is not as sensitive to the small particles as it is to the larger particles, and thus gives a better correlation to particulate mass (Uthe, 1980). As discussed above, this correlation is done with respect to manual methods such as EPA Method 5 or 17 test data. Since the light transmittance, T, is reduced exponentially by an increase in mass concentration, a semilog plot of light transmittance versus concentration should yield a straight line, or linear correlation. Another method of developing the correlation is to first convert the transmittance data to optical density, where optical density, D, is defined as:

$$D = \log(1/T) \qquad \text{Equation 3-1}$$

Another expression that is used frequently for such correlations is "extinction," a parameter that normalizes the path length:

$$b = 2.303D/l \qquad \text{Equation 3-2}$$

where b = extinction
D = optical density
l = light path length

A graphical plot of either optical density or extinction against the manually determined particulate concentration should give a straight line correlation. The measurement sensitivity of this technique is approximately 10 mg/m^3 for a one meter optical path.

Extinction-mass correlations have been developed successfully for many types of emission sources. However, as implied above, correlations may be sensitive to changes in the particle-size distribution in the flue gas. In a practical sense, transmissometers used to provide mass measurements in Germany with retesting every 3 to 5 years have been found to maintain the original correlation (Peeler, 1996).

3.2.2.2.2 Optical - Light Scattering. When light is directed toward a particle, the particle may both absorb and scatter the light. If the wavelength of the light is large with respect to the size of the particle, a type of scattering called “Rayleigh” scattering occurs. If the wavelength of the light is approximately the same as the radius of the particle, a type of scattering called "Mie" scattering will occur (originally described by Gustav Mie in 1908). This form of scattering is shown in Figure 3-15.

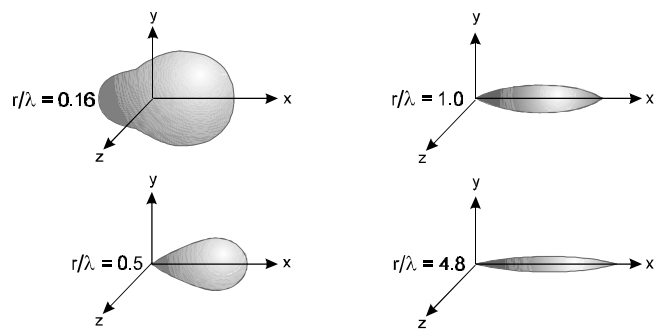

Figure 3-15. Angular dependence of the intensity of light scattered by a spherical particle with index of refraction 1.20. The intensity is arbitrarily normalized in each case. (Source: Ashley, L.E., 1958)

Note from the figure that for values of r/λ less than 0.5 (where r is the particle radius and λ the wavelength of the light), the particle will scatter the light in many directions - forward, backwards, up, down, etc. For values of r/λ > 1.0, the scattering will occur principally in the forward direction.

Baghouses and electrostatic precipitators used to control the emission of particulate matter will collect particles that are greater than 1 μm (1000 nm) in diameter effectively. However, collecting particles in the submicron range (<1 μm) is more difficult. These are the particles that will have a higher probability of escaping into the atmosphere. Visible light

(range 400 nm to 700 nm) scattering from these particles is, therefore, within the region of applicability of Mie theory for visible and infrared light.

Analyzers have been developed to take advantage of scattering effects. They can be designed to measure either back-scattered light, forward scattered light, or light scattered toward the side, at a specified angle. A side-scattering instrument is illustrated in Figure 3-16.

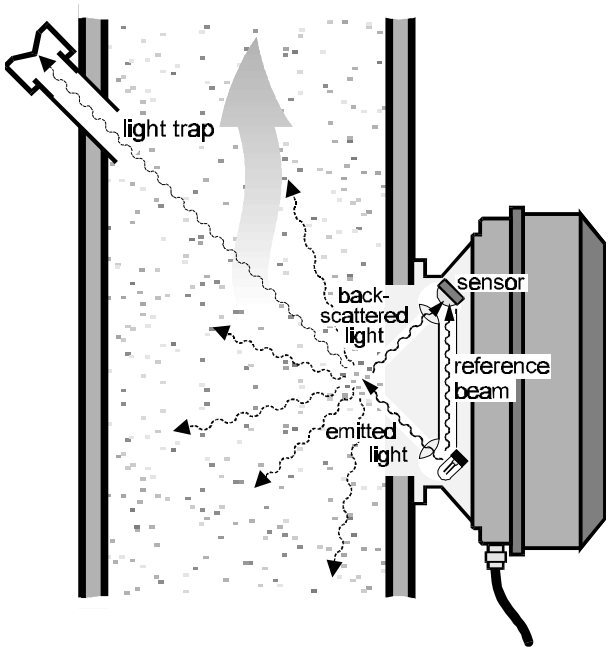

Figure 3-16. A Side-scattering continuous mass emission monitor.

In this side-scattering device, infrared light is focused on a sample volume. Instead of measuring the back-scattered radiation, the device locates a sensor above the lamp such that side-scattered light is detected. A reference measurement is made by monitoring the lamp intensity through a tube passing from the lamp to the detector.

3.2.2.2.3 Nuclear - Beta Ray Attenuation. When beta rays pass through a material, they can be absorbed or reflected by that material. The transmission of the beta rays is therefore attenuated and the reduction in beam intensity can be correlated to the amount of material present. By using a radioisotope for the beta source (e.g. Kr^{85}, C^{14}), "beta gauges" have been developed that can monitor particulate mass continuously (Figure 3-17) (Nader, 1975). In this device, the flue gas is drawn isokinetically through a probe. The sample may then be diluted to reduce the dew point to levels where condensation of flue gas moisture will not occur in the instrument. The gas is filtered through a glass fiber filter to produce a spot of collected particulate matter, which is moved between the beta source and detector for a determination of the beta ray attenuation. In practice, a moving filter tape allows the intermittent collection and measurement of one data point to produce a semi-continuous measurement.

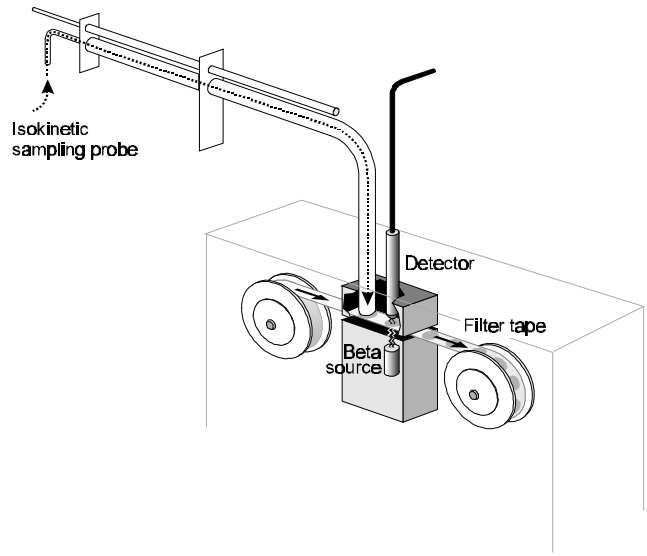

Figure 3-17. Typical beta gauge paper tape monitor.

The reduction of the beta ray beam intensity through the spot depends upon the electron density of the collected material and the amount of material present. To produce consistent measurements, a constant relationship must exist between the number of electrons per molecule and the molecular weight. This ratio is essentially the same for most particulate matter found in coal and oil combustion sources. In this method, the sample gas volume is controlled to provide a value for the particulate matter concentration. The range of the instrument is typically from 2 to 4,000 mg/m^3.

The method does require that the sample be collected isokinetically. Problems may occur with particulate deposition in the sample probe and sampling lines. As discussed earlier, strategies have been devised to minimize such deposition. Spot collection efficiency, particle composition, and gas volumes and dilution ratios are all factors that may produce error.

These problems may be minimized in some applications by first diluting the sample, using high transport velocities, or pulsating flow (Farthing, 1996).

3.2.2.2.4 Electrical - Contact Charge Transfer. When two dissimilar materials make contact, a net transfer of electrons from one material to the other can occur. This is not an effect based on the accumulation or transfer of static charges, but an effect based upon the intrinsic electronic properties of the materials themselves. The amount of charge transferred depends on the particle's work function, resistivity, dielectric constant, and the physical conditions of contact (particle deformation, duration of contact, area of contact, etc.) (Wang, 1988). The operating mechanism has been advertised as the "tribo-electric effect," a term which is not commonly found in the scientific literature. This has tended to confuse the evaluation of the technique.

The instrument is simple, consisting of a metal surface probe inserted into the stack. It has been qualitatively successful as a bag-house particulate alarm monitor. The instrument, however, lacks a method of probe calibration and has shown problems for monitoring after electrostatic precipitators because of static electrical charges on the particles. Also, small particles may follow the gas streamlines around the probe and never make contact for the measurement.

3.2.2.2.5 Electromechanical - Piezoelectricity, Loaded Beam. Electromechanical devices have been developed on the principle that the frequency of a vibrating oscillator will change if the mass of the vibrating element changes. A piezoelectric crystal, a cantilevered beam, or oscillating metal band may be used to provide the mechanical vibration. When particulate matter comes into contact with the vibrating element, it adheres to it and changes its total mass, and consequently, its vibration frequency. This mass-dependent vibration frequency is then measured as the correlation parameter.

When applied to flue gas measurements, the sample must be withdrawn isokinetically from the flue and it must be diluted to avoid condensation of the flue gas moisture. When the particles don't adhere to the vibrating element, the data are not representative. When the particles do adhere, the vibrating element eventually will become overloaded and it must be cleaned and recalibrated. Although some interest in this method has been shown, it has not become commercially available technology.

3.2.2.2.6 Other Methods. Several newer methods for continuous particulate monitoring have appeared on the commercial market. In what is termed an "acoustic energy" technique, particles impacting on a probe produce acoustic waves in the probe transducer. The oscillations produced are used to count the impact of single particles on the probe and thus provide a relationship to the flue gas particulate matter concentration.

In another technique, variation on transmissometry utilizes fluctuations in the light transmission due to the flue gas particles passing through the light beam. This generates an instrument response that is directly proportional to the particulate concentration.

3.2.2.3 Choosing a Continuous Particulate Monitoring System

Numerous technical issues are involved in choosing a continuous particulate monitoring system. First, the flue gas stream must be well characterized to determine the presence or absence of water droplets, particulate concentration levels, and the degree of particulate stratification. A selection process that considers these issues is illustrated in Figure 3-18.

3.3 Monitoring for Metals

3.3.1 Sampling Problems for Metals

Either extractive or in-situ sampling methods can be used for monitoring metals. However, measurement problems develop when a metal is present in the flue gas in both the vapor and solid phases. Mercury is a typical example, where most of the total mercury is present as a vapor, although some may be bound in the form of mercuric chloride or other compounds in the particulate matter. Simple optical instrumentation can detect the mercury vapor, but not the other mercury compounds. To obtain a value for total mercury, either an extractive technique must be em-ployed to reduce these compounds for subsequent measurement, or the particles and vapor alike can be heated to extremely high temperatures (as in an electric arc, a plasma torch, or a focused high energy laser beam) to emit characteristic spectra.

In extractive metals monitoring systems, metal amalgamation and deposition in the probe and sampling lines present a significant problem. Here, close-coupled systems or very short sampling lines may be necessary to obtain reproducible results.

3.3.2 Mercury Monitoring Methods

Commercial systems are available for monitoring mercury on a continuous basis. Municipal incinerator regulatory requirements in Germany and other European countries have promoted the development of continuous monitoring methods. In the United States, mercury monitoring requirements and mercury CEM performance specifications have been proposed for facilities that incinerate hazardous waste (61 FR 17358) (USEPA, 1996).

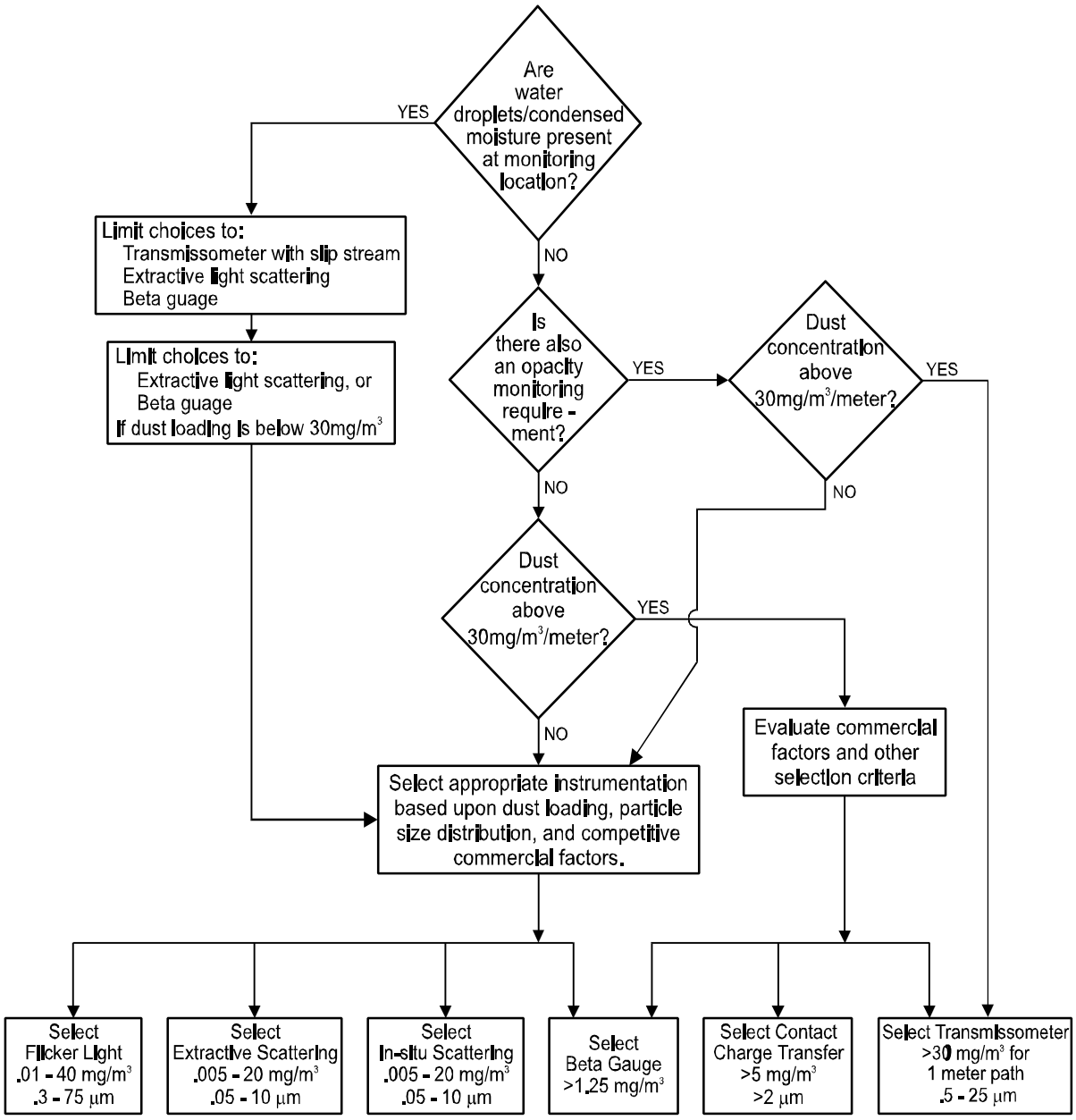

Figure 3-18. Selection process for particulate monitors.

In most mercury monitoring methods, mercury vapor is analyzed by light in the ultraviolet region of the spectrum. The simplest method is to merely project a UV light into the stack as in an in-situ instrument and monitor the absorption of light by the elemental mercury vapor. However, if mercury is present in other molecular forms, such as mercuric chloride ($HgCl_2$), total mercury will not be measured. Although in many incineration facilities elemental mercury comprises greater than 90% of the total mercury emitted, interest remains to measure total mercury. As a result, various stratagems have been devised to reduce the mercury compounds to elemental mercury, vaporize the elemental mercury, and measure the vapor through UV light absorption techniques.

In one method, an isokinetically extracted continuous sample is heated in an infrared oven to volatilize particulate bound mercury and a sodium hydroboron solution is used to reduce all mercury compounds to

elemental mercury. Elemental mercury then is measured using a UV photometer. In another method, mercury compounds are reduced chemically using stannous chloride and the elemental mercury is amalgamated with gold, which then is heated to release the mercury as vapor to be measured using a UV photometer.

In a new microsensor technology, mercury vapor adsorbs on the surface of a thin noble-metal film. The electrical properties of the film change quantitatively to give a measurement of the amount of mercury present (Glaunsinger, 1995).

Although mercury monitoring methods are commercially available, to measure total mercury adsorbed or bound on particulate matter, a continuous isokinetic sample must be obtained and the sample reduced to elemental mercury. However, chemical systems and ovens used in the various system designs require frequent periodic maintenance. These maintenance demands are typically greater than for traditional criteria pollutant monitoring systems.

3.3.3 Multi-Metal Methods

Title III of 1990 Clean Air Act Amendments has listed ten other metals, in addition to mercury, that are to be regulated as hazardous air pollutants (air toxics). These metals are: antimony (Sb), arsenic (As), beryllium (Be), cadmium (Cd), chromium (Cr), cobalt (Co), lead (Pb), manganese (Mn), nickel (Ni), and selenium (Se). Whether these metals will be required to be monitored individually and continuously is unclear. Nevertheless, considerable interest exists in the development of instrumental methods for metals. (See, for example, Durham, 1995). As in the initial development of gas monitors, multi-metal methods are essentially laboratory techniques adapted for field use. The techniques of x-ray fluorescence spectroscopy and atomic emission spectroscopy have seen the most application. The atomic emission spectroscopic techniques differ by the manner in which the metal atoms are excited - either through the use of a laser, a radio-frequency plasma, or a microwave generated plasma.

3.3.3.1 X-Ray Fluorescence Spectroscopy

X-ray fluorescence spectrometry is being applied in a manner similar to that of the beta gauge used to continuously monitor particulate matter. To analyze for metals, particulate bound and gaseous metals are collected on an activated carbon impregnated filter. The collected material is then exposed to x-rays, which excite the atoms to higher electronic levels. As the excited atoms de-excite, they fluoresce, emitting light at wavelengths specific for each metal. The amount of emitted light is measured and the flue gas metal concentration calculated.

X-ray fluorescence spectroscopy is a well-established technology; however, the commercial continuous monitoring systems applying the technique have not been developed fully. Current systems involve collecting and analyzing the filter samples in a batch mode, not a continuous mode.

3.3.3.2 Atomic Emission Spectroscopic Systems

Atoms can be excited in many ways and when excited sufficiently, will emit light energy. Two excitation methods under development are that of inductively couple plasma and laser spark spectrometry.

3.3.3.2.1 Inductively Coupled Plasma Spectrometry. In this technique, a radio frequency generated plasma is used to heat the flue gas sample to temperatures greater than 10,000°C (Figure 3 -19).

The light emitted by the metal atoms excited at this extreme temperature is measured using a diffraction grating and photodetectors as shown in the figure. A system is under development (Seltzer, 1994) that extracts a sample continuously and isokinetically from the stack, which is then subjected to the heat of a plasma torch.

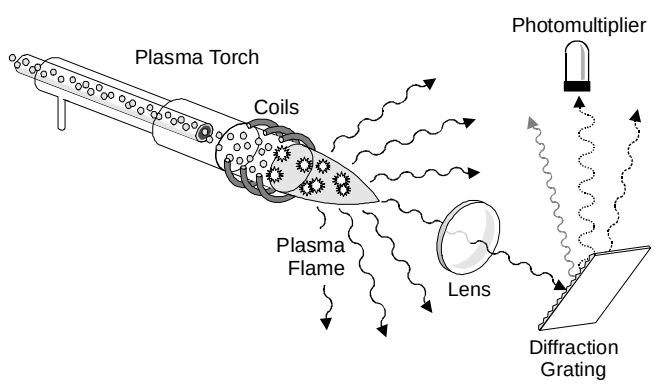

Figure 3-19. Inductively coupled plasma technique.

3.3.3.2.2 Laser Spark Spectrometry. In laser spark spectrometry, a high energy laser is used to excite metal atoms in the stack (Figure 3-20). Here, the laser provides energy to excite the metal atoms, both in the gaseous phase and those adhering to the surface of the particulate matter. The light emitted by the excited metal atoms is again collected and analyzed.

Validating multi-metal monitoring methods has proven difficult. Uncertainties associated with the manual wet chemical test methods (e.g., Method 29)

have also led to uncertainties in assessing the performance
of the instrument methods. As discussed above, the partition of metals between gaseous and solid phases introduces additional difficulties since problems of both gaseous and particulate stratification and both gas and particle sampling losses need to be overcome. In addition to these sampling issues, convenient calibration methods and traceable standards have not been developed. At present, data quality can be estimated only through extraordinary research efforts. These challenges are formidable and will take several years of research and development to overcome.

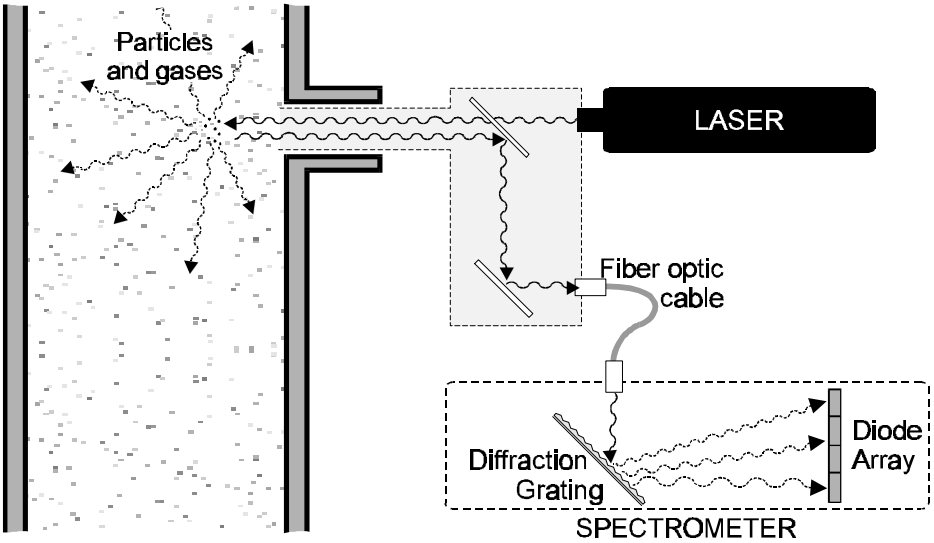

Figure 3-20. Laser spark spectrometry.

References

Ashley, L.E. and Cobb, C.M. 1958. Single Particle Scattering Functions for Latex Spheres in Water. *J. Optical Soc. of America*. 48:261-268.

Ayer, J. and Williams, G.M. 1996. "FTIR Monitoring for Real Time Organic Emissions Measurement and Process Control at Military or Industrial coating Facilities and Other Solvent Operations." Paper presented at the *Air & Waste Management Association Meeting*. Nashville, TN. Paper No. 96-WA65.01.

Bacon, T. 1993. Ion Mobility Spectrometry Tackles Continuous Emission Monitoring Problems. *Pollution Equipment News*. Vol. 26. No. 7. pp 4-5.

Bacon, A.T. and Reategui, J. 1993. Ion Mobility Spectroscopy Applications for Continuous Emission Monitoring, in *Continuous Emission Monitoring - A Technology for the 90s.* Air & Waste Management Association. Pittsburgh, PA. pp 288-300.

Bacon, T. and Webber. 1996. "Acid and Halogen Gas Monitoring Utilizing In Mobility Spectroscopy (IMS)." Paper presented at the *Air & Waste Management Association Meeting*. Nashville, TN. Paper No. 96-TA30.02

Bartak, D.E., Wiley, R.M., Crome, C, and Rover, M. 1996. "Analysis of Volatile Organic Compounds (VOCs) by Extractive FTIR Spectroscopy." Paper presented at the *Air & Waste Management Association Meeting*. Nashville, TN. Paper 96-RP65.06.

Bartman, C.D., Renfroe, J., Robards, H., and Connolly, E. 1990. "A Mass Spectrometer-Based Continuous Emissions Monitoring System for Hazardous Material Stack Gas Measurements." Paper presented at the *International Joint Power Generation Conference*, 1990.

Biermann, H.S., and Winer, A.M. 1990. Recent improvements in the design and operation of a differential optical absorption spectrometer for in-situ

measurement of gaseous air pollutants. Paper presented at the *Air Pollution Control Association Meeting*, Pittsburgh, PA. Paper No. 90-87.2.

Campbell, K. R., Hallett, D.J., and Resch, R.J. 1991. Assessment of an on-Line CI-Mass Spectrometer as a Continuous Emission Monitor for Sewage Sludge Incinerators, in *Municipal Waste Combustion.* Air & Waste Management Association. Pittsburgh, PA. pp 880-884.

Coleman, W.M., Dominguez, L. M., Gordon, R.J. 1996. A Gas Chromatographic Continuous Emissions Monitoring System for the Determination of VOCs and HAPs. J. of the Air & Waste Management Association. Vol 46, No.1, pp 30-34.

Cone, L., Logan, T., and Rollins, R. 1990. "Carbon Monoxide and Total Hydrocarbon Continuous Monitoring at Hazardous Waste Incineration Facilities" in *Continuous Emission Monitoring: Present and Future Applications*. Air & Waste Management Association. pp. 338-349.

Dominguez, L.M., Gordon, B.M., and Coleman, W.M. 1995. "A Commercial Gas-Chromatographic Continuous Emissions Monitoring System for The Determination of VOCs and HAPs." Paper presented at the *Air & Waste Management Association Meeting*, San Antonio, TX. Paper 95-TA16B.06.

Dunder, T.A. 1994. "Evaluation of Fourier Transform Infrared (FTIR) Technology for Continuous Emissions Monitoring." Paper presented at the *Air & Waste Management Association Meeting*. Cincinnati, OH. Paper No. 94-TP29B.02.

Dunder, T.A., Stone, C.D. 1995. "Permeation and Adsorption of Carbon Monoxide in Polymeric Tubing Used for Extractive Emissions Monitoring Applications." Paper Presented at the *Air & Waste Management Association Meeting*, San Antonio, TX. Paper No. 95-TA-16B.02.

Durham, M.D. and French, N.B. 1995. Status of Emerging Technologies for the Continuous Monitoring of Metal Emissions from Waste Combustion, in *Solid Waste Management: Thermal Treatment & Waste-to-Energy Technologies*. Air & Waste Management Association, Pittsburgh, PA.

Eldridge, J.S., Stock, J.W., Reagen, W.K., and Osborne, J.M. 1995. "Extractive FTIR: Manufacturing Process Optimization Study." Paper presented at the *Air & Waste Management Association Meeting*, San Antonio, TX. Paper No. 95-TA32.01.

Farthing, W.E. and Williamson;, A.D. 1996. Characterizations of Continuous Particulate Monitoring Approaches for Stationary Sources. *Continuous Compliance Monitoring Under the Clean Air Act Amendments***.** Air & Waste Management Association. Pittsburgh, PA. pp 194-207.

Federal Republic of Germany (FRG), Federal Ministry for the Environment, Natural Conservation, and Nuclear Safety. 1992. Air Pollution Control Manual of Continuous Emission Monitoring, Regulations and Procedures for Emission Measurements, 2nd Revised Edition.

Frish, M.B. 1996. "The SpectraScan® Family of Truce Gas Monitors Based on Tunable Diode Laser Spectroscopy," Paper presented at the *Air & Waste Management Association Meeting*, Nashville, TN. Paper 96-TP26B.05.

Geyer, T. 1996. "Performance Specification and Evaluation of Fourier Transform Infrared (FTIR) Continuous Emission Monitors for Measuring Hazardous Air Pollutants." Paper presented at the *Air & Waste Management Association Meeting.* Nashville, TN. Paper 96-WA65.02.

Giddings, J.D. 1965. *Dynamics of Chromatography*. Marcel Dekker. New York, NY.

Giel, T.V. and Douglas, J.R. 1995. "Measurement of Particle Volume Concentrations with a New CEM for Particulate Emissions." Paper presented at the *Air & Waste Management Association Meeting.* San Antonio, TX. Paper No. 95-MP17.03.

Glaunsinger, W. 1995. "New Chemical Micro-sensors and Implications for Continuous Mercury Monitoring." Paper presented at the *Air & Waste Management Association Meeting,* San Antonio, TX. Paper 95-MP-21.05.

Gnyp, A.W., Price, S.J.W., St. Pierre, C.C., Smith, D.S. 1979. Long Term Field Evaluation of Continuous Particulate Monitors, in *Proceedings: Advances in Particle Sampling and Measurement (Asheville, NC, May 1978***)**. EPA-600/79-065. pp 122-168.

Haile, D.M., Dorris, E.H., and Finney, G.L. 1995. "Field Analysis of Hazardous Air Pollutants with an Ion Trap Mass Spectrometer." Paper presented at the *Air & Waste Management Association Meeting,* San Antonio, TX. Paper No. 95-TA32.05

Harlow, G., Bartman, C.D., and Renfroe, J.R. 1990. "Design of a Continuous Emissions Monitoring System at a Manufacturing Facility Recycling Hazardous

Waste." Paper presented at the *Great Lakes 90 Hazardous Materials Control Research Institute.*

Hellwig, G.V., Dunbar, D., and Richards, J. 1986. Portable Instruments User's Manual for Monitoring VOC Sources. EPA-340/1-86-015.

Hewitt, G.F. and Driscoll, J.N. 1981. A New Concept in Environmental Chromatography. Analytical Instrumentation. Vol. 19. pp 5-6.

International Standards Organization (ISO). 1995. *Automated Monitoring of Mass Concentration of Particles in Stationary Source Emissions: Performance Characteristics, Test Procedures and Specifications.* ISO 10155.

Jahnke, J.A. 1984. *Transmissometer Systems -- Operation and Maintenance, An Advanced Course. APTI Course 476A***.** EPA-450-84-004.

Jahnke, J.A. 1993. *Continuous Emission Monitoring*. Van Nostrand Reinhold. NY, NY.

Jahnke, J.A., Maybach, G.B., and Marshall, R.P. 1994a. "Pressure and Temperature Effects in Dilution Extractive Continuous Emission Monitoring Systems," Electric Power Research Institute, Palo Alto, CA.

Jahnke J.A. 1994b. *An Operators Guide to Eliminating Bias in CEM Systems*, EPA/400/R-94/016, Washington, D.C., U.S. Environmental Protection Agency.

Joklik, R.G. 1995. "Technology-Based Approach to Establishing Maximum Achievable Control Technology for Hazardous Waste Combustion Devices, Draft Report on Trip to Visit TÜV Rheinland," EPA Contract 68-D2-0164, February 1995.

Kinner, L.L., Geyer, T. J. and Lay, L.T. 1995. "Field Validation Testing of Fourier Transform Infrared (FTIR) Spectrometry Method for Measurement of Formaldehyde, Phenol, and Methanol from Stationary Sources." Paper presented at the *Air & Waste Management Association Meeting*. San Antonio, TX Paper No. 95-TA32.01.

Kinner, L.L. and Plummer, G.M. 1993. An Investigation of Process Mass Spectroscopy as a Continuous Emission Analyzer for Stationary Sources, in *Measurement of Toxic and Related Air Pollutants.* Air & Waste Management Association. Pittsburgh, PA. pp 414-422.

Lang, F.D., Shliftshteyn, A. 1991. "Emission Spectral Radiometer/Fuel Flow Instrument for Determination of Instantaneous Heat Rate." *Proceedings of Heat Rate Improvement Conference,* Scottsdale, AZ., May 7-9, 1991.

Mandel, S.B. and Gottlieb, M.S. 1995. Development of a Close-coupled Multigas Analyzer for Continuous Emissions Monitoring. Paper presented at the *Air & Waste Management Association Meeting*, San Antonio, TX. Paper 95-TA16B.04.

McDonald, W.C., Erickson, M.D., Abraham, B.M., and Robbat, A. 1994. Developments and Applications of Field Mass Spectrometers. *Environ. Sci. Technol*. Vol. 28 No.77 pp 336A-343A.

Mine Safety Appliances (MSA). 1996. Commercial literature. Pittsburgh, PA.

Nader, J.S. 1975. Current Technology for Continuous Monitoring of Particulate Emissions. *J. Air Poll. Control Assoc***.** Vol 25, No. 8 pp 814-821.

Pedersen, S.V. 1989. Measurement of Process Emissions with a New Multigas Monitor.

Peeler, J.W., Jahnke, J.A., and Wisker, S.M. 1996. Continuous Particulate Monitoring in Germany and Europe Using Optical Techniques. *Continuous Compliance Monitoring Under the Clean Air Act Amendments.* Air & Waste Management Association. Pittsburgh, PA. pp 208-220.

Peeler, J.W., Kinner, L.L., and DeLuca, S. 1996. General Field Test Method Approval Process and Specific Application for a Direct Interface GCMS Source Test Method. Paper presented at the Air & Waste Management Association Meeting. Nashville, TN. Paper 96-WA132.01.

Podlenski, J. Peduto, McInnes, R. Abell, F., and Gronberg, S. 1984. *Feasibility Study for Adapting Present Combustion Source Continuous Monitoring Systems to Hazardous Waste Incinerators: 1. Adaptability Study and Guidelines Document*. EPA 600/8-84-011a.

Reagen, W.K. and Wright, B.D. 1996. "Production Facility Emissions Assessment Using Heated Extractive FTIR Spectroscopy and EPA Method 25A." Paper presented at the *Air & Waste Management Association Meeting*. Nashville, TN. Paper 96-WA65.05.

Seinfeld, J.H. 1986. *Atmospheric Chemistry and Physics of Air Pollution*, Wiley Interscience Publications, New York, NY. pp 374-375.

Seltzer, M.D. and Green, R.B. 1994. Instrumentation for Continuous Emissions Monitoring of Airborne Met-

als. *Process Control and Quality*. No. 6 (1994) pp 37-46.

Shanklin, S.A., Logan T.J. 1989. "An Evaluation of Current Instrumentation for Continuous Monitoring of Hydrogen Chloride Emissions from Waste Incinerators," *Proceedings Air & Waste Management Association Specialty Conference on Continuous Emission Monitoring*, Pittsburgh, PA.

Sollid, J.E., Trujillo, V.L., Limback, S.P., and Woloshun, K.A. 1996. "Comparison of Photoacoustic Radiometry to Gas Chromatography/Mass Spectrometry Methods for Monitoring Chlorinated Hydrocarbons." Paper presented at the *Air & Waste Management Association Meeting*, Nashville, TN. Paper No. 96-WA65.08.

Stock, J.W. and Eldridge, J.S. 1996. "Process and Emission Evaluation Using Extractive FTIR." Paper presented at the *Air & Waste Management Association Meeting.* Nashville, TN. Paper 96-WA65.04.

TÜV Rheinland. 1985. Institute for Energy Technology and Protection of the Environment, Report no.: 936/806001/GM21.

Thijssen, J.H.J. 1995. "Measurement of Organic HAP Emissions with Laser Induced Fluorescence." Paper presented at the *Air & Waste Management Association Meeting*, San Antonio, TX. Paper 95-TA32.03.

U.S. Environmental Protection Agency. 1993. "Field Validation Testing at a Coal Fired Boiler," United States Environmental Protection Agency Report, EPA Contract No. 68D20163, WA No. 2. U.S. Environmental Protection Agency. 1996. Revised Standards for Hazardous Waste Combustors. 61 FR 17358.

U.S. Environmental Protection Agency. 1996b. Standards of Performance for New Stationary Sources - 40 CFR 60. *Code of Federal Regulations*, Washington, D.C.

Uthe, E.E. 1980. Evaluation of an Infrared Transmissometer for Monitoring Particulate Mass Concentrations of Emissions from Stationary Sources. J. Air Poll. Control Assoc. 30:382-386.

Uthe, E.E. 1982. Particle Size Evaluations Using Multiwavelength Extinction Measurements. *Applied Optics*. 21:454-459.

Verein Deutscher Ingenieure (VDI). 1980 Staubmessung in Strömenden Gasen Bestimmung der Staubbeladung durch Kontinuierliches Messen der Optischen Transmission. VDI 2066. *VDI-Handbook Reinhaltung der Luft,* Band 4. Dusseldorf.

Verein Deutscher Ingenieure (VDI). 1989. *Measurement of Particulate Matter in Flowing Gases; Determination of Dust Load by Continuous Measurement of Scattered Light with the Photometer KTN,* VDI 2066 Band 6, Dusseldorf.

Vidrine, D.W. and McIntosh, B. 1993. Hydrogen Chloride Monitoring Using an FTIR Based CEM System, in *Continuous Emission Monitoring - A Technology for the 90s.* Air & Waste Management Association. Pittsburgh, PA. pp 280-287.

Villalobos, R. 1975. Process Gas Chromatography. *Analytical Chemistry*. Vol 47. pp 983A-992A.

Wang, H. and John, W. 1988. Dynamic Contact Charge Transfer Considering Plastic Deformation. *J. Aerosol Sci*. Vol. 19 No.4, pp 399-411.

Willeke, K. and Baron, P.A. 1993. *Aerosol Measurement - Principles, Techniques and Applications*. Van Nostrand, Reinhold, NY.