APPENDIX

Appendix A: Process Operating Data
Appendix B: Calculations
Appendix C: Raw Field Data and Calibration Data Sheets
Appendix D: Reduced Field Data Sheets
Appendix E: Sampling Log and Chain of Custody Records
Appendix F: Analytical Data Sheets
Appendix G: List of Participants

 © Mostardi-Platt Associates, Inc.

TEST 1

Table 4 MERCURY SPECIATION TEST						
Plant Operating Data						
Station: GRDA Coal Fired			Unit: #2			
Test date: 9-22-99						
Recorded by: W. Helean						
Hourly Readings						
Time:	0930	10:00	1030	1100	1130	
Gross (MWH)	489	492	489	490	490	
Net Generation (MWH)	465	466	466	464	467	
Steam Conditions						
Throttle Stm Temp (°F)	984	985	983	982	981	
Throttle Stm Press (PSIG)	2205	2208	2207	2201	2206	
First Stage Press (PSIG)	1860	1862	1862	1849	1862	
Cold RH Temp (°F)	635	635	634	634	634	
Cold RH Press (PSIG)	552	554	555	550	553	
Main Stm Flow (KLBH)	3231	3216	3242	3214	3233	
Feedwater						
Feedwater Temp (°F)	483	483	482	483	483	
#1 MS Attemp Flow (KLBH)	260	274	170	210	185	
#1 RH Attemp Flow (KLBH)	N/A	N/A	N/A	N/A	N/A	
Boiler	AD3340					
#1 AH Gas In Temp (°F)	783	774	774	779	780	
#1 AH Gas Out Temp (°F)	339	336	340	341	336	
#1 AH Air In Temp (°F)	85	85	85	86	86	
#1 AH Air Out Temp (°F)	709	702	699	703	704	

© Mostardi-Platt Associates, Inc.

TEST 1

Keith Johnson

Table 4
MERCURY SPECIATION TEST
Plant Operating Data

	Coal Flow						
	CEM KSCFH	9:30	10	10:30	11	11:30	Avg.
12	Stack Flow SCFH	89244	94836	95370	93204	92100	92951
12	Temperature	182.7	183.3	183.0	183.9	182.7	
2	Opacity	3	3	3	2	4	
3	Carbon Dioxide (CO_2) OUTLET	10.7%	10.6	10.7	10.9	10.8	
	" INLET FGD	11.29%	11.52	11.34	11.57	11.33	

KSCFM- 1549.2

© Mostardi-Platt Associates, Inc.

TEST 1

All values listed are Hlbs

Table 5
MERCURY SPECIATION TESTS COAL FEEDER DATA

Date:	9-21-99	Test Hours:	____ to ____	Operator	Charlie Nell
Unit:	UNIT #2	2	0930 - 1130	Load (MW):	490 Gross MW

Ending Hour Readings

Data Point	Read From		Hour 0 0930	Hour 1 1000	Hour 2 1030	Hour 3 1100	Hour 4 1130	Total
Feeder A (Total Pounds)	Coal Feeder Counter	AW	113525	114078	114627	115174	115738	2213
		AO	OFF 906083	off	off	off	906083	—
Feeder B (Total Pounds)	Coal Feeder Counter	BW	OFF 625520	off	off	off	625520	—
		BØW	427626	428185	428736	429284	429850	2224
Feeder C (Total Pounds)	Coal Feeder Counter	CW	504664	505138	505606	506069	506549	1885
		CO	429897	429988	430077	430166	430259	362
Feeder D (Total Pounds)	Coal Feeder Counter	DW	850640	851109	851578	852041	852519	1879
		DO	918046	918133	918218	918302	918389	343
Feeder E (Total Pounds)	Coal Feeder Counter	EW	Red Tagged NA	—	—	—	R/T	—
		EO	Red Tagged NA	—	—	—	R/T	—
Feeder F (Total Pounds)	Coal Feeder Counter	FW	531585	532151	532718	533271	533843	2258
		FO	OFF 188690	off	off	off	188690	—
Fuel Samples Taken	☒ Yes	☐ No						
Fly Ash Samples Taken	☐ Yes	☐ No						

18 TPH Okla. Coal -
264 TPH wy Coal

Wyoming - 10,459
Oklahoma - 705

© Mostardi-Platt Associates, Inc.

TEST 2

Table 4 MERCURY SPECIATION TEST						
Plant Operating Data						
Station: GRDA Coal Fired			Unit: #2			
Test date: 9-22-99						
Recorded by: W. Helean						
Hourly Readings						
Time:	1245	1315	1345	1415	1445	
Gross (MWH)	493	493	490	491	491	
Net Generation (MWH)	467	464	463	466	465	
Steam Conditions						
Throttle Stm Temp (°F)	980	981	983	984	981	
Throttle Stm Press (PSIG)	2210	2203	2201	2205	2205	
First Stage Press (PSIG)	1870	1856	1853	1857	1864	
Cold RH Temp (°F)	634	635	634	636	634	
Cold RH Press (PSIG)	554	550	550	551	554	
Main Stm Flow (KLBH)	3247	3222	3217	3222	3239	
Feedwater						
Feedwater Temp (°F)	483	482	482	482	483	
#1 MS Attemp Flow (KLBH)	167	115	229	191	228	
#1 RH Attemp Flow (KLBH)	N/A	N/A	N/A	N/A	N/A	
Boiler						
#1 AH Gas In Temp (°F)	783	791	784	781	775	
#1 AH Gas Out Temp (°F)	337	338	340	338	334	
#1 AH Air In Temp (°F)	86	86	85	85	86	
#1 AH Air Out Temp (°F)	704	709	708	707	702	

© Mostardi-Platt Associates, Inc.

TEST 2

K. JOHNSTON.
C. BARRETT

Table 4 MERCURY SPECIATION TEST Plant Operating Data						
Coal Flow						
CEM KSCFH	12:45	1315	1345	1415	1445	Avg.
Stack Flow SCFH	91422	94074	96870	94554	96300	94644
Temperature	183.4	183.4	184.1	184.1	183.4	
Opacity	3	3	4	4	4	
Carbon Dioxide (CO_2)	10.8	10.7	10.9	10.9	10.9	
INLET FGD	11.10	11.2	11.24	11.11	11.17	

KSCFM- 1577.4

© Mostardi-Platt Associates, Inc.

TEST 2

Table 5
MERCURY SPECIATION TESTS COAL FEEDER DATA

Date:	9-22-99	Test Hours:	1245 to 1445	Operator	W. Helcon
Unit:	#2			Load (MW):	490

Ending Hour Readings

Data Point	Read From		Hour 0	Hour 1	Hour 2	Hour 3	Hour 4	Total
Feeder A (Total Pounds)	Coal Feeder Counter	AW	117178	117657	118177	118767	119337	2159
		AO	906083	906083	906083	906083	906083	off
Feeder B (Total Pounds)	Coal Feeder Counter	BW	625520	625520	625520	625520	625520	off
		BØW	431305	431782	432303	432893	433467	2162
Feeder C (Total Pounds)	Coal Feeder Counter	CW	507780	508183	508622	509119	509600	1820
		CO	430499	430577	430663	430759	430854	355
Feeder D (Total Pounds)	Coal Feeder Counter	DW	853754	854157	854597	855091	855573	1819
		DO	918617	918691	918772	918864	918953	336
Feeder E (Total Pounds)	Coal Feeder Counter	EW	566402	566402	566402	566402	566402	off
		EO	576692	576692	576692	576692	576692	off
Feeder F (Total Pounds)	Coal Feeder Counter	FW	535338	535814	536342	536941	537510	2172
		FO	188700	188700	188700	188700	188700	off
Fuel Samples Taken	☒ Yes	☐ No						
Fly Ash Samples Taken	☒ Yes	☐ No						

18 TON OKLACOal
260 TON WY COAL

Wyoming - 10132
Oklahoma - 691

© Mostardi-Platt Associates, Inc.

Test #3

Table 4 MERCURY SPECIATION TEST Plant Operating Data						
Station: GRDA Coal Fired			Unit: #2			
Test date: 9-22-99						
Recorded by: W. Helcon [illegible]						
Hourly Readings						
Time:	1615	1645	1715	1745	1815	
Gross (MWH)	491	491	491	490	490	
Net Generation (MWH)	466	467	466	464	464	
Steam Conditions						
Throttle Stm Temp (°F)	982	983	983	981	980	
Throttle Stm Press (PSIG)	2203	2201	2204	2203	2206	
First Stage Press (PSIG)	1835	1840	1842	1844	1836	
Cold RH Temp (°F)	636	635	636	635	634	
Cold RH Press (PSIG)	550	549	550	550	550	
Main Stm Flow (KLBH)	3200	3189	3200	3206	3197	
Feedwater						
Feedwater Temp (°F)	482	482	482	482	482	
#1 MS Attemp Flow (KLBH)	222	151	100	199	166	
#1 RH Attemp Flow (KLBH)	N/A	N/A	N/A	N/A	N/A	
Boiler						
#1 AH Gas In Temp (°F)	771	769	774	775	775	
#1 AH Gas Out Temp (°F)	333	332	334	339	335	
#1 AH Air In Temp (°F)	85	85	85	85	85	
#1 AH Air Out Temp (°F)	700	698	698	702	702	

© Mostardi-Platt Associates, Inc.

TEST 3

C. BARRETT

Table 4 MERCURY SPECIATION TEST						
Plant Operating Data						
Coal Flow						
CEM KSCFH	16.15	16.45	1715	1745	18.15	Avg.
Stack Flow SCFH	87580	85662	84990	85032	88812	86415
Temperature	182.8	183	182.7	183.8	183.4	
Opacity	4	3	2	1	2	
Carbon Dioxide (CO_2)	10.8	10.8	11.0	10.8	11.0	
FGD	11.12	11.11	11.28	11.21	11.21	

KSCFM - 1440.3

© Mostardi-Platt Associates, Inc.

Test #3

Table 5
MERCURY SPECIATION TESTS COAL FEEDER DATA

Date:	9-22-99	Test Hours:	1615 to 1815	Operator	W. Helean [illegible]
Unit:	#2			Load (MW):	490

Ending Hour Readings

Data Point	Read From		Hour 0	Hour 1	Hour 2	Hour 3	Hour 4	
Feeder A (Total Pounds)	Coal Feeder Counter	AW	120682	121362	122042	122616	123303	2621
		AO	906083	906083	906083	906083	906083	off
Feeder B (Total Pounds)	Coal Feeder Counter	BW	625520	625500	625520	625520	625520	off
		BØW	435018	435600	436183	436757	437446	2428
Feeder C (Total Pounds)	Coal Feeder Counter	CW	510916	511401	511881	512363	512944	2028
		CO	431123	431210	431305	431402	431516	393
Feeder D (Total Pounds)	Coal Feeder Counter	DW	856880	857370	857850	858339	858914	2034
		DO	919199	919289	919380	919472	919579	380
Feeder E (Total Pounds)	Coal Feeder Counter	EW	566402	566402	566402	566402	566402	off
		EO	576692	576692	576692	576692	576692	off
Feeder F (Total Pounds)	Coal Feeder Counter	FW	539085	539765	540245	540828	541524	2439
		FO	188700	188700	188700	188700	188700	off
Fuel Samples Taken	☒ Yes	☐ No						
Fly Ash Samples Taken	☒ Yes	☐ No						

18 TON OKLA COAL
255 TON WY COAL

Wyoming - 11550
Oklahoma - 773

© Mostardi-Platt Associates, Inc.

SUMMARY OF RESULTS CALCULATIONS

$$Vm\ (std) = 17.647 \times Vm \times \left[\frac{P_{bar} + \frac{DH}{13.6}}{(460 + Tm)} \right] \times Y$$

$$Vw\ (std) = 0.0471 \times Vlc$$

Vlc = water + silica net

$$Bws = \left[\frac{Vw\ (std)}{Vw\ (std) + Vm\ (std)} \right]$$

$$Md = (0.44 \times \%CO_2) + (0.32 \times \%O_2) + [0.28 \times (100 - \%CO_2 - \%O_2)]$$

$$MS = Md \times (1 - Bws) + (18 \times Bws)$$

$$Vs = \sqrt{\frac{(Ts + 460)}{Ms \times Ps}} \times \sqrt{DP} \times Cp \times 85.49$$

Cp = pitot tube correction factor
Ps = absolute flue gas pressure
Ms = molecular weight of gas (lb/lb mole)
Md = dry molecular weight of gas (lb/lb mole)
Bws = water vapor in gas stream proportion by volume

$$Acfm = Vs \times Area\ (of\ stack\ or\ duct) \times 60$$

$$Dscfm = Acfm \times 17.647 \times \left[\frac{Ps}{(460 + Ts)} \right] \times (1 - Bws)$$

$$Scfm = Acfm \times 17.647 \times \left[\frac{Ps}{(460 + Ts)} \right]$$

$$Scfh = Scfm \times 60 \frac{min}{hr}$$

©Mostardi-Platt Associates, Inc.

MERCURY CALCULATIONS

Determination of Speciated Mercury

Concentration

$$\frac{\text{ug of Mercury detected} \times \frac{10^{-6}\,\text{g}}{\text{ug}}}{453.6\,\text{g/lb}} = \text{lbs Mercury/sample}$$

$$\frac{\text{lbs Mercury/sample}}{\text{Vm(std)}} = \text{lbs Mercury/dscf}$$

Emission Rates

$$\text{lbs Mercury/hr} = \text{lbs/dscf} \times \text{dscf/min} \times 60\ \text{min/hr}$$

$$\text{lbs Mercury}/10^{12}\,\text{Btu} = \text{lbs/dscf} \times F_d\,\text{Factor}\left(\text{dscf}/10^{6}\,\text{Btu}\right) \times \frac{20.9\%}{20.9\% - O_2\%} \times 10^{6}$$

Mercury Fractions

Elemental Mercury Catch – mercury collected in the acidified hydrogen peroxide (HNO_3-H_2O_2) and potassium permanganate (H_2SO_4-$KMnO_4$) impinger solutions.

Oxidized Mercury Catch – mercury collected in the aqueous potassium chloride (KCl) impinger solution.

Particle-bound Mercury Catch – mercury associated with the particulate matter collected in the front half of the sampling train.

Determination of Mercury Available from Coal

$$\text{lbs Mercury/hr} = \frac{\text{ug Mercury}}{\text{g Coal}}(\text{dry}) \times \frac{10^{-6}\,\text{g}}{\text{ug}} \times \frac{\text{lbs Coal (wet)}}{\text{hr}} \times (1 - B_{ws})\ \text{moisture corr.}$$

$$\text{lbs Mercury}/10^{12}\,\text{Btu} = \frac{\text{lbs Mercury}}{\text{hr}} \div \frac{10^{12}\,\text{Btu}}{\text{hr}}$$

© Mostardi-Platt Associates, Inc.

NOMENCLATURE

A = Cross-sectional area of stack or duct, ft^2
A_n = Cross-sectional area of nozzle, ft^2
B_{ws} = Water vapor in gas stream, proportion by volume
C_a = Acetone blank residue concentration, g/g
C_{acf} = Concentration of particulate matter in gas stream at actual conditions, gr/acf
C_p = Pitot tube coefficient, dimensionless
C_s = Concentration of particulate matter in gas stream, dry basis, corrected to standard conditions, gr/dscf
IKV = Isokinetic sampling variance, must be $.90 \leq IKV \leq 1.10$
M_d = Dry molecular weight of gas, lb/lb-mole
m_n = Total amount of particulate matter collected, grams
M_s = Molecular weight of gas, wet basis, lb/lb-mole
M_w = Molecular weight of water, 18.0 lb/lb-mole
m_a = Mass of residue of acetone after evaporation, grams
P_{bar} = Barometric pressure at testing site, in. Hg
P_g = Static pressure of gas, in. Hg (in. H_2O/13.6)
P_s = Absolute pressure of gas, in. Hg = $P_{bar} + P_g$
P_{std} = Standard absolute pressure, 29.92 in. Hg
Q_{acfm} = Actual volumetric gas flow rate, acfm
Q_{sd} = Dry volumetric gas flow rate corrected to standard conditions, dscf/hr
R = Ideal gas constant, 21.85 in. Hg-ft^3/°R-lb-mole
T_m = Absolute dry gas meter temperature, °R
T_s = Absolute gas temperature, °R
T_{std} = Standard absolute temperature, 528°R
V_a = Volume of acetone blank, ml
V_{aw} = Volume of acetone used in wash, ml
V_{lc} = Total volume of liquid collected in impingers and silica gel, ml
V_m = Volume of gas sample as measured by dry gas meter, dcf
$V_{m(std)}$ = Volume of gas sample measured by dry gas meter, corrected to standard conditions, dscf
v_s = Gas velocity, ft/sec
$V_{w(std)}$ = Volume of water vapor in gas sample, corrected to standard conditions, scf
W_a = Weight of residue in acetone wash, grams
Y = Dry gas meter calibration factor
ΔH = Average pressure differential across the orifice meter, in. H_2O
Δp = Velocity head of gas, in. H_2O
ρ_a = Density of acetone, 0.7855 g/ml (average)
ρ_w = Density of water, 0.002201 lb/ml
θ = Total sampling time, minutes
K_1 = 17.64 °R/in. Hg
K_2 = 0.04707 ft^3/ml
K_4 = 0.09450/100 = 0.000945
K_p = Pitot tube constant, $85.49 \frac{ft}{sec}\left[\frac{(lb/lb-mole)(in.Hg)}{(°R)(in.H_2O)}\right]^{1/2}$
%EA = Percent excess air
$\%CO_2$ = Percent carbon dioxide by volume, dry basis
$\%O_2$ = Percent oxygen by volume, dry basis
%CO = Percent carbon monoxide by volume, dry basis
$\%N_2$ = Percent nitrogen by volume, dry basis
0.264 = Ratio of O_2 to N_2 in air, v/v
0.28 = Molecular weight of N_2 or CO, divided by 100
0.32 = Molecular weight of O_2 divided by 100
0.44 = Molecular weight of CO_2 divided by 100
13.6 = Specific gravity of mercury (Hg)

© Mostardi-Platt Associates, Inc.

CALCULATION FORMULAS

1. $$V_{m(std)} = V_m Y \left(\frac{T_{std}}{T_m}\right)\left(\frac{P_{bar} + \frac{\Delta H}{13.6}}{P_{std}}\right) = K_1 V_m Y \frac{P_{bar} + \frac{\Delta H}{13.6}}{T_m}$$

2. $$V_{w(std)} = V_{lc}\left(\frac{\rho_w}{M_w}\right)\left(\frac{RT_{std}}{P_{std}}\right) = K_2 V_{lc}$$

3. $$B_{ws} = \frac{V_{w(std)}}{V_{m(std)} + V_{w(std)}}$$

4a. $$C_a = \frac{m_a}{V_a \rho_a}$$

4b. $$W_a = C_a V_{aw} \rho_a$$

5. $$C_S = (15.43 \text{ grains/gram})\,(m_n / V_{m(std)})$$

6. $$C_{acf} = 15.43 K_i \left(\frac{m_n P_s}{V_{w(std)} + V_{m(std)}\ T_s}\right)$$

7. $$\%EA = \left(\frac{\%O_2 - (0.5\ \%CO}{0.264\ \%N_2 - (\%O_2 - 0.5\ \%CO}\right) \times 100$$

8. $$M_d = 0.44(\%CO_2) + 0.32(\%O_2) + 0.28(\%N_2 + \%CO)$$

9. $$M_s = M_d(1 - B_{ws}) + 18.0 B_{ws}$$

10. $$v_s = K_p C_p \sqrt{\frac{\Delta P\ T_s}{P_s M_s}}$$

11. $$Q_{acfm} = v_s A(60_{sec/min})$$

12. $$Q_{sd} = (3600_{sec/hr})(1 - B_{ws})\ v_s \left(\frac{T_{std} P_s}{T_s P_{std}}\right) A$$

13. $$E \text{ (emission rate, lbs/hr)} = Q_{std}(C_s / 7000 \text{ grains/lb})$$

14. $$IKV = \frac{T_s V_{m(std)} P_{std}}{T_{std} v_s \theta A_n P_s 60(1 - B_{ws})} = K_4 \frac{T_s V_{m(std)}}{P_s v_s A_n \theta (1 - B_{ws})}$$

© Mostardi-Platt Associates, Inc.

EMISSION RATE CALCULATIONS

A pollutant emission rate (E), expressed as pounds of pollutant per million Btu heat input from the fuel combusted can be calculated by several methods as follows:

1. $C = C_s/7000$ where, C = pollutant concentration, lb/dscf
   c_s = pollutant concentration, grains/dscf

2. If fuel flow is monitored and the fuel combusted during the test is sampled and analyzed for gross calorific value, then:

$$E = \frac{Q_{sd}C}{\text{fuel flow rate (lb / hr) GCV}} \times 10^6$$

where, E = lbs per million Btu
GCV = gross calorific value, Btu / lb
Q_{sd} = dry volumetric gas flow at standard conditions, dscf / hr

3. If an integrated gas sample is taken during the test and analyzed for $\%CO_2$ or $\%O_2$, dry basis by volume, with an Orsat gas analyzer, then

$$E = C\,F_c \frac{100}{(\%CO_2)} \text{ or, } E = C\,F \frac{20.9}{(20.9 - \%O_2)} \quad \text{where,}$$

$\%CO_2$ and $\%O_2$ are expressed as percent; and, for example, for subbituminous and bituminous coals:

F_c = a factor representing a ratio of the volume of carbon dioxide generated to the calorific value of the fuel combusted, 1800 scf CO_2/million Btu.

F = a factor representing a ratio of the volume of dry flue gases generated to the calorific value of the fuel combusted, 9780 dscf/million Btu.

4. If fuel sample increments are taken and composited during the test and an ultimate analysis is performed and the GCV is determined, then

$$F_c = \frac{321 \times 10^3 (\%C)}{GCV} \quad \text{where, } \%C = \text{carbon content by weight expressed as percent}$$

$$F = \frac{\left[3.64\,(\%H) + 1.53\,(\%C) + 0.57\,(\%S) + 0.14\,(\%N) - 0.46\,(\%O_2)\right]}{GVC} \times 10^6$$

where, H, C, S, N, and O are content by weight of hydrogen, carbon, sulfur, nitrogen, and oxygen (expressed as percent) respectively.

5. If fuels other than subbituminous and bituminous coals are fired, other F-factors than those above will apply; and, if combinations of different fuels are fired, the F-factors must be prorated according to the fraction of the total heat input derived from each type of fuel.

© Mostardi-Platt Associates, Inc.

MOSTARDI-PLATT ASSOCIATES, INC.
TEST SUPPORT DATA

TEST RUN NO. 1

COMPANY: GRDA
PLANT: CHOUTEAU UNIT 2
TEST LOCATION: FGD INLET
CLIENT: GRDA
OPERATOR: JRP
DATE: 9/22/99
CONTROL BOX: E-17 POT. NO.: E-17
METER NO.: E-17
METER CALIBRATION FACTOR: 0.994
PITOT ID NO.: 434A
PITOT TUBE COEFFICIENT: 0.830
PORT LENGTH: 30 in.
PORT SIZE: 4 in.
PORT TYPE: FLANGE

IMPINGER H_2O
FINAL: 5037.1 ml/gm
INITIAL: 4843.7 ml/gm
GAIN: 193.4 ml/gm

SILICA GEL:
FINAL WT: 762.2 gm
INITIAL WT: 742.6 gm
WT. GAIN: 19.6 gm

TOTAL H_2O COLLECTED:
DESCRIPTION OF IMPINGER H_2O:
SILICA GEL EXHAUSTED?:
IMPINGERS RECOVERED BY:
SILICA GEL WEIGHED BY:

COMMENTS & NOTES

THIMBLE NO: TARE WT:
FILTER NO: 036 TARE WT: 2.8738
BAROMETRIC PRESSURE in. Hg: 29.44
FLUE PRESSURE in. H_2O: -19.0
FLUE PRESSURE in. Hg ABS: 28.04
PROBE LENGTH: 12 ft.
PROBE LINER MATERIAL: TEFLON
NOZZLE IDENTIFICATION NO: #8
CALIBRATED NOZZLE DIAMETER: 0.240
LEAK CHECK: PRE: 0.00 POST: 0.00 @ 16/18 in. Hg
DUCT SHAPE: Rect. DIAMETER:
DUCT AREA: 520.00 sq. ft. L 16' W 32.5
DISTURBANCE UPSTREAM: DOWNSTREAM:
TEST LENGTH: 110 min
MINUTES PER POINT: 5
TOTAL NUMBER OF TRAVERSE POINTS: 22
GAS ANALYSIS (ORSAT/FYRITE):
CO_2: 13.2 13.2 13.2
O_2: 5.4 5.4 5.4

PITOT LEAK CHECK: PRE POST
ΔH@
SAMPLES REMOVED FROM SITE BY:

For computer data entry: Supervisor, please complete.
Do you want to enter a fuel analysis? Y ☐ N ☐
What value do you want to use? F = 9,780 F_c = 1,800 Other = _____
Circle to indicate "Yes" or add other value if not given.

Form 1053 [Rev. 6/97]

© Mostardi-Platt Associates, Inc.

FIELD TEST DATA SHEET
FOR ISOKINETIC SAMPLING

MOSTARDI-PLATT ASSOCIATES, INC.

PROJECT GRDA - CHOUTEAU
TEST RUN NO. 1
TEST LOCATION UNIT 2 FGD INLET

DATE 9/21/99 PAGE 1 OF 2

Port-Point No.	Velocity Head (P) in. H_2O	$\sqrt{P}$	Clock Time 24 hr.	Meter Volume (Vm) ft^3	1.562 Orifice (H) in. H_2O	Stack Temp (t_s) °F	Meter Temp. (t_m) Inlet °F	Meter Temp. (t_m) Outlet °F	0.761 Meter Rate cfm	Pump Vacuum in. Hg	Notes	Probe Temp. °F	Filter Holder Temp. °F	Impinger Outlet Temp. °F
1-1	1.00	1.000	0930	18.55	1.56	322	62	58	0.76	5.0		238	230	58
2	0.95	0.975	0935	22.30	1.48	320	63	60	0.74		22.35	238	230	58
3	0.80	0.894	0940	26.00	1.25	320	65	61	0.68		26.05	239	230	60
4	0.75	0.866	0945	29.40	1.17	316	66	61	0.66		29.34	239	230	62
5	0.66	0.812	0950	32.65	1.03	315	68	63	0.62		32.64	239	230	59
	-0.30	4.547	0955	35.80	6.49	1597	627				35.74			
2-1	1.00	1.000	0957	36.10	1.56	309	70	65	0.76			239	230	58
2	0.80	0.894	1002	39.75	1.25	309	74	68	0.68		39.90	239	230	56
3	0.85	0.922	1007	43.15	1.33	312	76	70	0.70		43.30	240	230	56
4	0.80	0.894	1012	46.70	1.25	311	78	72	0.68		46.80	241	230	57
5	0.60	0.775	1017	50.20	0.94	311	80	74	0.59		50.20	241	230	57
	-0.10	4.485	1022	53.30	6.33	1552	727				53.15			
3-1	0.62	0.787	1026	54.00	0.97	286	87	77	0.60			240	230	58
2	0.62	0.787	1031	57.05	0.97	301	87	77	0.60		57.00	240	230	59
3	0.60	0.775	1036	60.00	0.94	303	87	80	0.59		60.00	238	230	60
4	0.65	0.806	1041	63.00	1.01	307	87	81	0.61		62.95	241	230	60
5	0.42	0.648	1046	66.00	0.66	304	87	81	0.49		66.00	241	235	55
	-0.40	3.803	1051	68.55	4.55	1513	831				68.45			
4-1	0.90	0.949	1052	68.95	1.40	304	57	81	0.72			242	235	61
2	0.85	0.922	1057	72.30	1.33	307	88	81	0.70		72.55	246	230	61
3	0.80	0.894	1102	75.90	1.25	307	88	81	0.68		76.05	245	230	60
4	0.75	0.866	1107	79.20	1.17	309	89	82	0.66		79.45	241	230	60
5	0.60	0.775	1112	82.50	0.94	312	90	82	0.59		82.75	243	230	60
	-0.11	4.406	1117	85.63	6.09	1539	849				85.70			
		17.241			23.46	6197	3034							

Form 1026 [Rev. 5/27]

© Mostardi-Platt Associates, Inc.

FIELD TEST DATA SHEET FOR ISOKINETIC SAMPLING

MOSTARDI-PLATT ASSOCIATES, INC.

PROJECT GRDA - CHOUTEAU

TEST RUN NO. 1

TEST LOCATION UNIT 2 FGD INLET

DATE 9/22/99 PAGE 2 OF 2

Port-Point No.	Velocity Head (P) in. H_2O	$\sqrt{P}$	Clock Time 24 hr.	Meter Volume (Vm) ft^3	Orifice (H) in. H_2O	Stack Temp (t_s) °F	Meter Temp. (t_m) Inlet °F	Meter Temp. (t_m) Outlet °F	Meter Rate cfm	Pump Vacuum in. Hg	Notes	Probe Temp. °F	Filter Holder Temp. °F	Impinger Outlet Temp. °F
5-1	0.90	0.949	1119	85.74	1.40	321	90	85	0.72			245	230	59
2	0.90	0.949	1124	89.00	1.40	321	91	86	0.72		89.34	241	230	59
3			1129	92.30							92.94			
4			1134											
5			1139											
			1144											
				92.30										
				-18.55										
				-0.91										
		19139			26.26	6839	3286							
				72.84										
		0.8700			1.194	310.9	77.0							

770.9 537

40

Form 1026 [Rev. 5/27]

© Mostardi-Platt Associates, Inc.

MOSTARDI-PLATT ASSOCIATES, INC.
TEST SUPPORT DATA

TEST RUN NO. 2

COMPANY: GRDA
PLANT: CHOUTEAU UNIT 2
TEST LOCATION: FGD INLET
CLIENT: GRDA
OPERATOR: JRB
DATE: 9/22/99
CONTROL BOX: E-17 POT. NO.: E-17
METER NO.: E-17
METER CALIBRATION FACTOR: 0.994
PITOT ID NO.: 434A
PITOT TUBE COEFFICIENT: 0.830
PORT LENGTH: 30 in.
PORT SIZE: 4 in.
PORT TYPE: FLANGE

IMPINGER H_2O
FINAL: 4966.3 ml/gm
INITIAL: 4760.8 ml/gm
GAIN: 205.5 ml/gm

SILICA GEL:
FINAL WT: 755.2 gm
INITIAL WT: 729.0 gm
WT. GAIN: 26.2 gm

TOTAL H_2O COLLECTED:
DESCRIPTION OF IMPINGER H_2O:
SILICA GEL EXHAUSTED?:
IMPINGERS RECOVERED BY:
SILICA GEL WEIGHED BY:

COMMENTS & NOTES

THIMBLE NO: TARE WT:
FILTER NO: 039 + 034 TARE WT: 3.4613 / 3.3772
BAROMETRIC PRESSURE in. Hg: 29.44
FLUE PRESSURE in. H_2O: -19.2
FLUE PRESSURE in. Hg ABS: 28.03
PROBE LENGTH: 12 ft.
PROBE LINER MATERIAL: TEFLON
NOZZLE IDENTIFICATION NO: #8
CALIBRATED NOZZLE DIAMETER: 0.240
LEAK CHECK: PRE: 0.01 POST: 0.00 @ 16/19 in. Hg
DUCT SHAPE: RECT DIAMETER:
DUCT AREA: 520.00 sq. ft. L 16' W 32.5'
DISTURBANCE UPSTREAM: DOWNSTREAM:
TEST LENGTH: 125 min
MINUTES PER POINT: 5
TOTAL NUMBER OF TRAVERSE POINTS: 25
GAS ANALYSIS (ORSAT/FYRITE):
CO_2: 13.0 13.0
O_2: 5.6 5.6

PITOT LEAK CHECK: PRE POST
ΔH@
SAMPLES REMOVED FROM SITE BY:

For computer data entry: Supervisor, please complete.
Do you want to enter a fuel analysis? Y ☐ N ☐
What value do you want to use? F = 9,780 F_c = 1,800 Other = _____
Circle to indicate "Yes" or add other value if not given.

Form 1053 [Rev. 6/97]

© Mostardi-Platt Associates, Inc.

FIELD TEST DATA SHEET FOR ISOKINETIC SAMPLING

MOSTARDI-PLATT ASSOCIATES, INC.

PROJECT GRDA - CHOUTEAU

TEST RUN NO. 2

TEST LOCATION UNIT 2 FGD INLET

DATE 9/22/99 PAGE 1 OF 2

Port-Point No.	Velocity Head (P) in. H_2O	$\sqrt{P}$	Clock Time 24 hr.	Meter Volume (Vm) ft^3	Orifice (H) in. H_2O (1.69)	Stack Temp (t_s) °F	Meter Temp. (t_m) Inlet °F	Meter Temp. (t_m) Outlet °F	Meter Rate cfm (0.82)	Pump Vacuum in. Hg	Notes	Probe Temp. °F	Filter Holder Temp. °F	Impinger Outlet Temp. °F
1-1	1.00	1.000	1245	92.64	1.69	324	93	93	0.82			242	230	60
2	0.90	0.949	1250	96.50	1.52	320	93	93	0.78	8.0	96.74	241	230	60
3	0.80	0.894	1255	100.40	1.35	321	94	94	0.73		100.64	241	230	60
4	0.70	0.837	1300	103.80	1.18	317	95	93	0.69		104.29	242	230	60
5	0.60	0.775	1305	107.20	1.01	314	95	93	0.64		107.74	241	235	60
	-0.16	4.455	1310	110.35	6.75	1596	936				110.94			
2-1	0.85	0.922	1312	110.50	1.44	314	95	93	0.76			241	230	58
2	0.85	0.922	1317	114.00	1.44	312	96	93	0.76		114.30	241	230	57
3	0.80	0.894	1322	117.80	1.35	319	96	93	0.73	9.0	118.10	242	235	59
4	0.80	0.894	1327	121.00	1.35	315	96	94	0.73		121.75	241	230	58
5	0.68	0.825	1332	124.90	1.15	313	96	94	0.68		125.40	242	230	59
	-0.40	4.457	1337	128.15	6.73	1573	946				128.80			
3-1	0.63	0.794	1345	128.55	1.06	301	94	92	0.65			242	230	59
*2	0.60	0.775	1350 / 1357	131.00 / 132.60	1.01	303	95	93	0.64	8.0	131.80	241	233	59
3	0.60	0.775	1402	135.80	1.01	306	98	93	0.64		135.8	242	233	58
4	0.60	0.775	1407	139.00	1.01	309	100	94	0.64		139.0	242	230	59
5	0.45	0.671	1412	142.20	0.76	312	101	95	0.55		142.20	242	230	60
	-1.83	3.790	1417	145.00	4.85	1531	955				144.95			
4-1	0.95	0.975	1418	145.23	1.61	307	100	95	0.80	12		240	234	60
2	0.95	0.975	1423	149.00	1.61	307	98	95	0.80		149.23	239	230	60
3	0.83	0.911	1428	153.00	1.40	309	95	94	0.75		153.23	240	230	60
4	0.80	0.894	1433	156.20	1.35	310	93	93	0.73		156.98	241	230	60
5	0.60	0.775	1438	160.00	1.01	312	93	93	0.64		160.63	245	230	59
	-0.25	4.53	1443	163.20	6.98	1546	945				163.83			
		17.232			25.31	6245	3786							

* CHANGED THIMBLES

Form 1026 [Rev. 5/27]

© Mostardi-Platt Associates, Inc.

FIELD TEST DATA SHEET
FOR ISOKINETIC SAMPLING

MOSTARDI-PLATT ASSOCIATES, INC.

PROJECT GRDA - CHOUTEAU
TEST RUN NO. 2
TEST LOCATION UNIT 2 FGD INLET

DATE 9/22/99 PAGE 2 OF 2

Port-Point No.	Velocity Head (P) in. H_2O	$\sqrt{P}$	Clock Time 24 hr.	Meter Volume (Vm) ft^3	Orifice (H) in. H_2O	Stack Temp (t_s) °F	Meter Temp. (t_m) Inlet °F	Meter Temp. (t_m) Outlet °F	Meter Rate cfm	Pump Vacuum in. Hg	Notes	Probe Temp. °F	Filter Holder Temp. °F	Impinger Outlet Temp. °F
5-1	0.95	0.975	1446	163.45	1.60	323	93	93	0.80	18		241	230	60
2	0.95	0.975	1451	167.50	1.60	322	93	92	0.80		167.45	242	230	60
3	0.95	0.975	1456	171.00	1.60	322	94	93	0.80		171.45	242	230	60
4	0.85	0.922	1501	174.80	1.44	321	95	93	0.76		175.45	243	230	60
5	0.60	0.775	1506	178.85	1.01	314	94	94	0.64		179.23	245	230	60
		4.622	1511	181.85	7.25		934				182.45			
				-92.64										
				-2.63										
		21.854			32.56	7847	4720							
		0.8742		86.58	1.302	313.9	94.4							
						773.9	554.4							

43

Form 1026 [Rev. 5/27]

© Mostardi-Platt Associates, Inc.

MOSTARDI-PLATT ASSOCIATES, INC.
TEST SUPPORT DATA

TEST RUN NO. 3

COMPANY: GRDA
PLANT: CHOUTEAU UNIT 2
TEST LOCATION: FGD INLET
CLIENT: GRDA
OPERATOR: JMP
DATE: 9/22/99
CONTROL BOX: E-17 POT. NO.: E-17
METER NO.: E-17
METER CALIBRATION FACTOR: 0.994
PITOT ID NO.: 434A
PITOT TUBE COEFFICIENT: 0.830
PORT LENGTH: 30 in.
PORT SIZE: 4 in.
PORT TYPE: FLANGE

IMPINGER H_2O
FINAL: 5032.3 ml/gm
INITIAL: 4903.8 ml/gm
GAIN: 128.5 ml/gm

SILICA GEL:
FINAL WT: 756.9 gm
INITIAL WT: 743.4 gm
WT. GAIN: 13.5 gm

TOTAL H_2O COLLECTED:
DESCRIPTION OF IMPINGER H_2O:
SILICA GEL EXHAUSTED?:
IMPINGERS RECOVERED BY:
SILICA GEL WEIGHED BY:

COMMENTS & NOTES

THIMBLE NO: — TARE WT:
FILTER NO: 020 TARE WT: 3.2237
BAROMETRIC PRESSURE in. Hg: 29.44
FLUE PRESSURE in. H_2O: -19.2
FLUE PRESSURE in. Hg ABS: 28.03
PROBE LENGTH: 12 ft.
PROBE LINER MATERIAL: TEFLON
NOZZLE IDENTIFICATION NO: #6
CALIBRATED NOZZLE DIAMETER: 0.180
LEAK CHECK: PRE: 0.00 POST: 0.00 @ 15/18 in. Hg
DUCT SHAPE: RECT DIAMETER:
DUCT AREA: 520.00 sq. ft. L 16' W 32.5'
DISTURBANCE UPSTREAM: DOWNSTREAM:
TEST LENGTH: 125 min
MINUTES PER POINT: 5
TOTAL NUMBER OF TRAVERSE POINTS: 25
GAS ANALYSIS (ORSAT/FYRITE):
CO_2: 13.0 13.0 13.0
O_2: 5.2 5.2 5.2

PITOT LEAK CHECK: PRE POST
ΔH@
SAMPLES REMOVED FROM SITE BY:

For computer data entry: Supervisor, please complete.
Do you want to enter a fuel analysis? Y ☐ N ☐
What value do you want to use? F_c = 9,780 F_c = 1,800 Other = _____
Circle to indicate "Yes" or add other value if not given.

Form 1053 [Rev. 6/97]

© Mostardi-Platt Associates, Inc.

FIELD TEST DATA SHEET FOR ISOKINETIC SAMPLING

MOSTARDI-PLATT ASSOCIATES, INC.

PROJECT [redacted] CHOUTEAU
TEST R[redacted]
TEST L[redacted]ATION [redacted] FGD INLET

DATE 9/22/99 PAGE 1 OF 2

Port-Point No.	Velocity Head (P) in. H_2O	$\sqrt{P}$	Clock Time 24 hr.	Meter Volume (Vm) ft^3	0.53 Orifice (H) in. H_2O	Stack Temp (t_s) °F	Meter Temp. (t_m) Inlet °F	Meter Temp. (t_m) Outlet °F	0.457 Meter Rate cfm	Pump Vacuum in. Hg	Notes	Probe Temp. °F	Filter Holder Temp. °F	Impinger Outlet Temp. °F
1-1	1.00	1.000	1622	82.67	0.53	318	92	91	0.46	6.0		244	242	58
2	0.90	0.949	1627	85.00	0.48	323	92	91	0.43		84.97	244	242	58
3	0.75	0.866	1632	87.15	0.40	319	92	91	0.40		87.12	243	241	59
4	0.65	0.806	1637	89.16	0.34	319	93	91	0.37		89.12	244	235	59
5	0.60	0.775	1642	91.10	0.32	311	94	92	0.35		90.97	244	233	59
	-0.30	4.396	1647	92.85	2.07	1590	919				92.72			
2-1	0.95	0.975	1648	93.16	0.50	309	94	92	0.45	7.0		243	230	59
2	0.85	0.922	1653	95.41	0.45	310	94	92	0.42		95.40	243	230	59
3	0.85	0.922	1658	97.50	0.45	308	95	92	0.42		97.50	243	230	60
4	0.80	0.894	1703	99.60	0.42	311	95	92	0.41		99.60	244	230	60
5	0.63	0.794	1708	101.65	0.33	309	95	93	0.36	6.0	101.65	244	230	60
	-0.35	4.507	1713	103.50	2.15	1547	934				103.40			
3-1	0.60	0.775	1717	103.85	0.32	295	94	93	0.35			244	231	61
2	0.55	0.742	1722	105.68	0.29	300	94	93	0.34		105.60	243	230	61
3	0.55	0.742	1727	107.40	0.29	306	94	93	0.34		107.30	243	230	62
4	0.60	0.775	1732	109.10	0.32	309	94	93	0.35		109.00	243	232	62
5	0.45	0.671	1737	110.78	0.24	312	93	92	0.31		110.75	243	232	63
	-0.28	3.705	1742	112.45	1.46	1522	933				112.30			
4-1	0.95	0.975	1743	112.73	0.50	309	93	92	0.45	7.0		242	230	61
2	0.90	0.949	1748	114.95	0.48	307	92	92	0.43		114.98	242	231	61
3	0.80	0.894	1753	117.07	0.42	309	92	91	0.41		117.13	242	232	61
4	0.77	0.877	1758	119.06	0.41	311	91	91	0.40		119.18	243	232	62
5	0.60	0.775	1803	121.00	0.32	311	91	90	0.35		121.18	243	233	62
	-0.30	4.47	1808	122.70	2.13	1549	915				122.93			
		17.678			7.81	6206	3701							

Form 1026 [Rev. 5/27]

© Mostardi-Platt Associ

FIELD TEST DATA SHEET
FOR ISOKINETIC SAMPLING

MOSTARDI-PLATT ASSOCIATES, INC.

PROJECT GNDD - CHOUTEAU
TEST RUN NO. 3
TEST LOCATION UNIT 2 FGD INLET

DATE 9/22/99 PAGE 2 OF 2

Port-Point No.	Velocity Head (P) in. H_2O	$\sqrt{P}$	Clock Time 24 hr.	Meter Volume (Vm) ft^3	0.53 Orifice (H) in. H_2O	Stack Temp (t_s) °F	Meter Temp. (t_m) Inlet °F	Meter Temp. (t_m) Outlet °F	0.457 Meter Rate cfm	Pump Vacuum in. Hg	Notes	Probe Temp. °F	Filter Holder Temp. °F	Impinger Outlet Temp. °F
5-1	1.00	1.000	1809	123.00	0.53	319	91	90	0.46			243	231	63
2	1.00	1.000	1814	125.20	0.53	324	91	90	0.46	8.0	125.30	245	231	62
3	1.00	1.000	1819	127.60	0.53	322	91	90	0.46		127.60	243	231	63
4	0.95	0.975	1824	129.75	0.50	320	90	89	0.45		129.90	243	233	63
5	0.75	0.866	1829	132.15	0.40	320	90	89	0.40		132.15			
		4.841	1834	134.25	2.48	1605	901				134.15			
				-82.67										
				-1.23										
		21.919			10.30	7811	4607							
		0.8768		50.35	0.412	312.4	92.0							

772.4 552

46

Form 1026 [Rev. 5/27]

© Mostardi Platt Associates, Inc.

PITOT TRAVERSE DATA

Project: GRDA

Location: BAGHOUSE INLET

Date: 9/21/99 Test No: _____ Time: 405

Point No.	ΔP	$\sqrt{\Delta P}$	t_s	Note α	Point No.	ΔP	$\sqrt{\Delta P}$	t_s	Note α
1-1	0.86	0.927	329	5	4-1	0.90	0.949	285	30
2	0.70	0.837	332	10	2	0.90	0.949	302	35
3	0.50	0.707	332	0	3	0.77	0.877	307	30
4	0.45	0.671	329	10	4	0.75	0.866	309	25
5	0.40	0.632	329	0	5	0.60	0.775	312	20
2-1	1.00	1.000	324	15	5-1	1.05	1.025	303	15
2	0.80	0.894	323	20	2	1.00	1.000	319	20
3	0.68	0.825	322	20	3	0.90	0.949	322	25
4	0.65	0.806	321	15	4	0.87	0.933	322	25
5	0.60	0.775	320	10	5	0.70	0.837	323	0
3-1	0.55	0.742	280	5					
2	0.50	0.707	296	5					
3	0.55	0.742	301	15					
4	0.60	0.775	306	25					
5	0.60	0.775	307	20					
							20.975	7855	
							0.839	314.2	

P_{bar}_____ "Hg Static_____ "H_2O P_g_____ "Hg P_s_____ "Hg Pitot ID_____ C_p_____ Temp. ID_____

0.44 × _____ $\%CO_2$ = _____ $\sqrt{\Delta P}$ _____ t_s_____ °F T_____ °R Flue Area _____ ft^2

0.32 × _____ $\%O_2$ = + _____ Duct Dimensions _____

0.28 × _____ $\%N_2$ = + _____ B_{ws}_____ 1 - B_{ws}_____ Disturbance: Upstream _____

(_____ Md × _____ 1-Bws) + (18 × _____ Bws) = _____ (Ms) Downstream _____

$$v_s = 85.49 \times ____ Cp \times \sqrt{\frac{(_____)Ts\ °R}{____ Ms \times ____ Ps}} \times ____ \sqrt{\Delta P} = ____ \text{ ft/sec (Vs)}$$

Q_{acfm} = _____ Vs × _____ Flue Area × 60 = _____ acfm Port Length_____ Inches

$$Q_{dscfm} = 17.647 \times ACFM \times \frac{Ps}{Ts\ °R} = _____ \text{ SCFM}$$

$$Q_{dscfm} = 17.647 \times ACFM \times \frac{Ps}{Ts\ °R} \times (1\text{-}Bws) = _____ \text{ DSCFM}$$

Pre-test leak check ____ "H_2O

Post-test leak check ____ "H_2O Data Taken By: _____

Form 1012 [Rev. 5/97]

©Mostardi-Platt Associates, Inc.

MOSTARDI PLATT ASSOCIATES, INC.
TEST SUPPORT DATA

TEST RUN NO. 1-(Hg SPECIATION)

COMPANY: GRAND RIVER DAM AUTHORITY (GRDA)
PLANT: GRAND RIVER DAM AUTHORITY (GRDA)
TEST LOCATION: UNIT 2 STACK
CLIENT: GRAND RIVER DAM AUTHORITY (GRDA)
OPERATOR: J. GEIGER
DATE: 9/22/99
CONTROL BOX: E-42 POT. NO.: E-42
METER NO.: E-42
METER CALIBRATION FACTOR: 1.004
PITOT ID NO.: 352 A
PITOT TUBE COEFFICIENT: 0.835
PORT LENGTH: 11 in.
PORT SIZE: 4 in.
PORT TYPE: NIPPLE

IMPINGER H_2O
FINAL: 4949.1 ml/gm
INITIAL: 4698.5 ml/gm
GAIN: 250.6 ml/gm

SILICA GEL:
FINAL WT: 791.6 gm
INITIAL WT: 779.2 gm
WT. GAIN: 12.4 gm

TOTAL H_2O COLLECTED:
DESCRIPTION OF IMPINGER H_2O:
SILICA GEL EXHAUSTED?:
IMPINGERS RECOVERED BY:
SILICA GEL WEIGHED BY:

COMMENTS & NOTES

THIMBLE NO: — TARE WT: —
FILTER NO: 031 TARE WT: 0.6643
BAROMETRIC PRESSURE in. Hg: 29.51
FLUE PRESSURE in. H_2O: -0.5
FLUE PRESSURE in. Hg ABS: 29.47
PROBE LENGTH: 8 ft.
PROBE LINER MATERIAL: GLASS
NOZZLE IDENTIFICATION NO:
CALIBRATED NOZZLE DIAMETER: 0.180
LEAK CHECK: PRE: 0.009 POST: 0.012 @ 10/13 in. Hg
DUCT SHAPE: CIRCULAR DIAMETER: 22 FT
DUCT AREA: 380.133 sq. ft. L W
DISTURBANCE UPSTREAM: DOWNSTREAM:
TEST LENGTH: 120 min
MINUTES PER POINT: 10
TOTAL NUMBER OF TRAVERSE POINTS: 12
GAS ANALYSIS (ORSAT/FYRITE):
CO_2: 12.5 12.5 12.5
O_2: 6.1 6.1 6.1

PITOT LEAK CHECK: PRE ✓ POST ✓
ΔH@ 1.919
SAMPLES REMOVED FROM SITE BY:

For computer data entry: Supervisor, please complete.
Do you want to enter a fuel analysis? Y ☐ N ☐
What value do you want to use? F = 9,780 F_c = 1,800 Other =
Circle to indicate "Yes" or add other value if not given.

© Mostardi-Platt Associates, Inc.

FIELD TEST DATA SHEET
FOR ISOKINETIC SAMPLING

MOSTARDI-PLATT ASSOCIATES, INC.

PROJECT GRAND RIVER DAM AUTHORITY (GRDA)
TEST RUN NO. 1 (Hg SPECIATION)
TEST LOCATION UNIT 2 STACK

DATE 9/22/99 PAGE 1 OF 2

Port-Point No.	Velocity Head (P) in. H_2O	$\sqrt{P}$	Clock Time 24 hr.	Meter Volume (Vm) ft^3	.747 Orifice (H) in. H_2O	Stack Temp (t_s) °F	Meter Temp. (t_m) Inlet °F	Meter Temp. (t_m) Outlet °F	.471 Meter Rate cfm	Pump Vacuum in. Hg	x5 Notes		Probe Temp. °F	Filter Holder Temp. °F	Impinger Outlet Temp. °F
1-1	1.6	1.265	930	37.034	1.20	183	68	68	.596	3	2.979		243	247	54
-1	1.5	1.225	935	40.055	1.12	184	73	68	.577	2	2.884	40.013	242	245	55
-2	1.5	1.225	940	42.893	1.12	183	76	69	.577	2	2.884	42.897	243	246	57
-2	1.6	1.265	945	45.687	1.20	183	77	70	.596	3	2.979	45.781	244	247	56
-3	1.4	1.183	950	48.781	1.05	182	78	70	.557	2	2.786	48.758	243	246	56
-3	1.2	1.095	955	51.542	0.90	182	79	72	.516	2	2.579	51.544	243	247	57
	8.8	7.258	1000	53.959	6.59	1097	451	417				54.124			
				16.925											
2-1	1.5	1.225	1006	53.959	1.12	183	77	72	.576	3	2.884		244	246	54
-1	1.5	1.225	1011	56.848	1.12	183	79	73	.576	3	2.884	56.843	244	247	54
-2	1.4	1.183	1016	59.731	1.05	183	79	73	.557	3	2.786	59.727	245	246	55
-2	1.4	1.183	1021	62.525	1.05	183	79	73	.557	3	2.786	62.513	244	247	54
-3	1.3	1.140	1026	65.254	.97	182	80	73	.537	3	2.685	65.299	244	248	54
-3	1.2	1.095	1031	67.856	.89	182	81	73	.516	3	2.579	67.984	245	247	53
	8.3	7.051	1036	70.474	6.20	1096	475	437				70.564			
				16.515											
3-1	1.4	1.183	1041	70.474	1.05	184	77	73	.557	3	2.786		245	248	58
-1	1.6	1.265	1046	73.311	1.20	184	75	71	.596	3	2.979	73.260	244	244	54
-2	1.5	1.224	1051	76.246	1.12	184	79	72	.577	3	2.884	76.238	244	247	54
-2	1.5	1.224	1056	79.011	1.12	184	79	72	.577	3	2.884	79.122	245	247	53
-3	1.3	1.140	1101	82.015	.97	184	78	73	.537	3	2.685	82.006	244	247	51
-3	1.2	1.095	1106	84.713	.89	182	78	74	.516	3	2.579	84.691	245	247	52
	8.5	7.131	1111	87.285	6.35	1102	466	435				87.271			
				16.811											

Form 1026 [Rev. 5/27]

© Mostardi Platt Associates, Inc

FIELD TEST DATA SHEET
FOR ISOKINETIC SAMPLING

MOSTARDI-PLATT ASSOCIATES, INC.

PROJECT GRAND RIVER DAM AUTHORITY (GRDA)
TEST RUN NO. 1 (Hg SPECIATION)
TEST LOCATION UNIT 2 STACK

DATE 9/22/99 PAGE 2 OF 2

Port-Point No.	Velocity Head (P) in. H_2O	$\sqrt{P}$	Clock Time 24 hr.	Meter Volume (Vm) ft^3	.747 Orifice (H) in. H_2O	Stack Temp (t_s) °F	Meter Temp. (t_m) Inlet °F	Meter Temp. (t_m) Outlet °F	.471 Meter Rate cfm	Pump Vacuum in. Hg	x5 Notes		Probe Temp. °F	Filter Holder Temp. °F	Impinger Outlet Temp. °F
4-1	1.5	1.225	1118	87.285	1.12	183	76	73	.577	3	2.884		244	245	61
-1	1.5	1.225	1123	90.222	1.12	186	77	74	.577	3	2.884	90.169	244	245	59
-2	1.6	1.265	1128	93.121	1.20	184	77	73	.596	3	2.979	93.053	244	246	58
-2	1.4	1.183	1133	95.931	1.05	184	78	73	.557	3	2.786	96.032	244	246	60
-3	1.4	1.183	1138	98.905	1.05	182	78	73	.557	3	2.786	98.818	244	245	61
-3	1.3	1.140	1143	101.737	0.97	183	79	73	.537	3	2.685	101.604	244	247	61
	8.7	7.221	1148	104.291	6.51	1102	465	439				104.289			
				17.006											
	1.43	1.194			1.07	183.2	77.4	72.0							
				67.257				74.7							

50

Form 1026 [Rev. 5/27]

© Mostardi Platt Associates

MOSTARDI-PLATT ASSOCIATES, INC.
TEST SUPPORT DATA

TEST RUN NO. 2 - (Hg SPECIATION)

COMPANY: GRAND RIVER DAM AUTHORITY (GRDA)
PLANT: GRAND RIVER DAM AUTHORITY (GRDA)
TEST LOCATION: UNIT 2 STACK
CLIENT: GRAND RIVER DAM AUTHORITY (GRDA)
OPERATOR: J. GEIGER
DATE: 9/22/99
CONTROL BOX: E-42 POT. NO.: E-42
METER NO.: E-42
METER CALIBRATION FACTOR: 1.004
PITOT ID NO.: 352 A
PITOT TUBE COEFFICIENT: 0.835
PORT LENGTH: 11 in.
PORT SIZE: 4 in.
PORT TYPE: NIPPLE

IMPINGER ~~H_2O~~
FINAL: 4832.6 ml/gm
INITIAL: 4579.2 ml/gm
GAIN: 253.4 ml/gm

SILICA GEL:
FINAL WT: 719.5 gm
INITIAL WT: 705.1 gm
WT. GAIN: 14.4 gm

TOTAL H_2O COLLECTED:
DESCRIPTION OF IMPINGER H_2O:
SILICA GEL EXHAUSTED?:
IMPINGERS RECOVERED BY:
SILICA GEL WEIGHED BY:

COMMENTS & NOTES

THIMBLE NO: — TARE WT: —
FILTER NO: 822 TARE WT: 0.6740
BAROMETRIC PRESSURE in. Hg: 29.51
FLUE PRESSURE in. H_2O: -0.5
FLUE PRESSURE in. Hg ABS: 29.47
PROBE LENGTH: 8 ft.
PROBE LINER MATERIAL: GLASS
NOZZLE IDENTIFICATION NO:
CALIBRATED NOZZLE DIAMETER: 0.180
LEAK CHECK: PRE: 0.015 POST: 0.008 @ 10/15 in. Hg
DUCT SHAPE: CIRCULAR DIAMETER: 22 FT
DUCT AREA: 380.133 sq. ft. L W
DISTURBANCE UPSTREAM: DOWNSTREAM:
TEST LENGTH: 120 min
MINUTES PER POINT: 10
TOTAL NUMBER OF TRAVERSE POINTS: 12
GAS ANALYSIS (ORSAT/FYRITE):
CO_2: 12.7 12.7 12.7
O_2: 6.4 6.4 6.4

PITOT LEAK CHECK: PRE ✓ POST ✓
ΔH@ 1.919
SAMPLES REMOVED FROM SITE BY:

For computer data entry: Supervisor, please complete.
Do you want to enter a fuel analysis? Y ☐ N ☐
What value do you want to use? F = 9,780 F_c = 1,800 Other =
Circle to indicate "Yes" or add other value if not given.

Form 1053 [Rev. 6/97]

© Mostardi-Platt Associates, Inc.

FIELD TEST DATA SHEET
FOR ISOKINETIC SAMPLING

MOSTARDI-PLATT ASSOCIATES, INC.

PROJECT GRAND RIVER DAM AUTHORITY (GRDA)
TEST RUN NO. 2 (Hg SPECIATION)
TEST LOCATION UNIT 2 STACK

DATE 9/22/99 PAGE 1 OF 2

Port-Point No.	Velocity Head (P) in. H_2O	$\sqrt{P}$	Clock Time 24 hr.	Meter Volume (Vm) ft^3	.749 Orifice (H) in. H_2O	Stack Temp (t_s) °F	Meter Temp. (t_m) Inlet °F	Meter Temp. (t_m) Outlet °F	.471 Meter Rate cfm	Pump Vacuum in. Hg	X5 Notes		Probe Temp. °F	Filter Holder Temp. °F	Impinger Outlet Temp. °F
1-1	1.5	1.225	1245	104.905	1.12	183	72	72	.577	3	2.884		245	242	55
1	1.6	1.265	1250	107.777	1.19	184	74	72	.595	4	2.979	107.789	239	246	55
2	1.5	1.225	1255	110.784	1.12	184	76	72	.577	4	2.885	110.768	243	246	58
2	1.5	1.226	1300	113.655	1.12	183	78	73	.577	3	2.885	113.653	243	247	61
3	1.3	1.140	1305	116.542	.97	183	79	73	.537	3	2.685	116.538	242	246	60
3	1.4	1.183	1310	119.189	1.05	183	79	73	.557	3	2.786	119.223	243	245	58
	8.8	7.263	1315	121.982	6.57	1100	458	435				122.009			
				17.077											
2-1	1.5	1.225	1320	121.982	1.12	184	75	73	.577	3	2.884		242	245	57
2	1.5	1.225	1325	124.957	1.12	184	77	73	.577	3	2.884	124.866	243	247	53
2	1.5	1.225	1330	127.779	1.12	183	82	73	.577	3	2.884	127.750	242	247	54
2	1.7	1.304	1335	130.821	1.27	184	79	72	.614	4	3.071	130.634	242	247	53
3	1.5	1.225	1340	133.715	1.12	182	78	72	.577	3	2.884	133.705	242	245	52
3	1.4	1.183	1345	136.635	1.05	184	79	71	.557	3	2.786	136.589	242	244	53
	9.1	7.387	1350	139.203	6.80	1101	470	434				139.375			
				17.221											
3-1	1.6	1.265	1355	139.203	1.20	185	78	72	.596	3	2.979		243	247	64
1	1.5	1.225	1400	142.195	1.12	185	79	72	.577	3	2.884	142.182	243	248	53
2	1.3	1.140	1405	145.131	.97	184	80	74	.537	4	2.685	145.066	243	247	55
2	1.4	1.183	1410	147.559	1.05	184	82	73	.557	4	2.786	147.751	244	247	55
3	1.3	1.140	1415	150.403	.97	183	78	71	.537	4	2.685	150.537	243	239	52
3	1.3	1.140	1420	153.300	.97	183	77	72	.537	4	2.685	153.222	242	245	54
	8.4	7.093	1425	156.076	6.28	1104	474	434				155.907			
				16.873											

Form 1026 [Rev. 5/27]

© Mostardi Platt Associates, Inc

FIELD TEST DATA SHEET
FOR ISOKINETIC SAMPLING

MOSTARDI-PLATT ASSOCIATES, INC.

PROJECT GRAND RIVER DAM AUTHORITY (GRDA)
TEST RUN NO. 2 (Hg SPECIATION)
TEST LOCATION UNIT 2 STACK

DATE 9/22/99 PAGE 2 OF 2

Port-Point No.	Velocity Head (P) in. H_2O	$\sqrt{P}$	Clock Time 24 hr.	Meter Volume (Vm) ft^3	.749 Orifice (H) in. H_2O	Stack Temp (t_s) °F	Meter Temp. (t_m) Inlet °F	Meter Temp. (t_m) Outlet °F	.471 Meter Rate cfm	Pump Vacuum in. Hg	x5 Notes		Probe Temp. °F	Filter Holder Temp. °F	Impinger Outlet Temp. °F
4-1	1.5	1.225	1430	156.076	1.12	183	83	73	.579	5	2.884		243	251	67
1	1.6	1.265	1435	159.005	1.20	184	82	74	.595	5	2.979	158.960	243	247	58
2	1.6	1.265	1440	161.922	1.20	183	76	71	.595	5	2.979	161.939	243	246	62
2	1.8	1.342	1445	165.003	1.35	184	77	72	.632	5	3.159	164.918	244	248	61
3	1.3	1.140	1450	168.049	.97	183	78	72	.537	5	2.685	168.078	243	245	60
3	1.4	1.183	1455	170.755	1.05	184	78	72	.557	5	2.786	170.763	243	243	58
	9.2	7.42	1500	173.692	6.89	1101	474	434				173.549			
				17.616											
	1.48	1.215			1.11	183.5	78.17	72.38							
				68.787			75.3								

53

Form 1026 [Rev. 5/27]

© Mostardi Platt Associates, Inc

MOSTARDI-PLATT ASSOCIATES, INC.
TEST SUPPORT DATA

TEST RUN NO. 3-(Hg SPECIATION)

COMPANY: GRAND RIVER DAM AUTHORITY (GRDA)
PLANT: GRAND RIVER DAM AUTHORITY (GRDA)
TEST LOCATION: UNIT 2 STACK
CLIENT: GRAND RIVER DAM AUTHORITY (GRDA)
OPERATOR: J. GEIGER
DATE: 9/22/99
CONTROL BOX: E-42 POT. NO.: E-42
METER NO.: E-42
METER CALIBRATION FACTOR: 1.004
PITOT ID NO.: 352 A
PITOT TUBE COEFFICIENT: 0.835
PORT LENGTH: 11 in.
PORT SIZE: 4 in.
PORT TYPE: NIPPLE

IMPINGER H_2O
FINAL: 4985.7 ml/gm
INITIAL: 4740.4 ml/gm
GAIN: 245.3 ml/gm

SILICA GEL:
FINAL WT: 791.4 gm
INITIAL WT: 775.2 gm
WT. GAIN: 16.2 gm

TOTAL H_2O COLLECTED:
DESCRIPTION OF IMPINGER H_2O:
SILICA GEL EXHAUSTED?:
IMPINGERS RECOVERED BY:
SILICA GEL WEIGHED BY:

COMMENTS & NOTES

THIMBLE NO: — TARE WT: —
FILTER NO: 039 TARE WT: 0.6727
BAROMETRIC PRESSURE in. Hg: 29.51
FLUE PRESSURE in. H_2O: -0.5
FLUE PRESSURE in. Hg ABS: 29.47
PROBE LENGTH: 8 ft.
PROBE LINER MATERIAL: GLASS
NOZZLE IDENTIFICATION NO:
CALIBRATED NOZZLE DIAMETER: 0.180
LEAK CHECK: PRE: 0.017 POST: 0.007 @ 10/14 in. Hg
DUCT SHAPE: CIRCULAR DIAMETER: 22 FT
DUCT AREA: 380.133 sq. ft. L W
DISTURBANCE UPSTREAM: DOWNSTREAM:
TEST LENGTH: 120 min
MINUTES PER POINT: 10
TOTAL NUMBER OF TRAVERSE POINTS: 12
GAS ANALYSIS (ORSAT/FYRITE):
CO_2: 12.7 12.7 12.7
O_2: 6.3 6.3 6.3

PITOT LEAK CHECK: PRE ✓ POST ✓
ΔH@ 1.919
SAMPLES REMOVED FROM SITE BY:

For computer data entry: Supervisor, please complete.
Do you want to enter a fuel analysis? Y ☐ N ☐
What value do you want to use? F = 9,780 F_c = 1,800 Other =
Circle to indicate "Yes" or add other value if not given.

© Mostardi-Platt Associates, Inc.

FIELD TEST DATA SHEET
FOR ISOKINETIC SAMPLING

MOSTARDI-PLATT ASSOCIATES, INC.

PROJECT GRAND RIVER DAM AUTHORITY (GRDA)
TEST RUN NO. 3 (Hg SPECIATION)
TEST LOCATION UNIT 2 STACK

DATE 9/22/99 PAGE 1 OF 2

Port-Point No.	Velocity Head (P) in. H_2O	$\sqrt{P}$	Clock Time 24 hr.	Meter Volume (Vm) ft^3	.749 Orifice (H) in. H_2O	Stack Temp (t_s) °F	Meter Temp. (t_m) Inlet °F	Meter Temp. (t_m) Outlet °F	.471 Meter Rate cfm	Pump Vacuum in. Hg	x5 Notes		Probe Temp. °F	Filter Holder Temp. °F	Impinger Outlet Temp. °F
1-1	1.5	1.225	1615	173.818	1.12	184	76	72	.577	3	2.884		250	242	65
1	1.5	1.225	1620	176.712	1.12	184	76	71	.577	3	2.884	176.702	251	240	61
2	1.6	1.265	1625	179.593	1.20	185	77	71	.595	3	2.979	179.586	245	242	57
2	1.4	1.183	1630	182.621	1.05	183	78	71	.557	3	2.786	182.565	251	242	63
3	1.3	1.140	1635	185.431	.97	183	78	71	.537	3	2.685	185.351	245	242	57
3	1.3	1.140	1640	188.117	.97	184	79	72	.537	3	2.685	188.036	247	245	56
	8.6	7.178	1645	190.838	6.43	1103	464	428				190.721			
				17.020											
2-1	1.4	1.183	1650	190.838	1.05	184	79	71	.557	3	2.786		249	242	54
1	1.5	1.225	1655	193.631	1.12	184	79	73	.577	4	2.884	193.624	251	242	55
2	1.5	1.225	1700	196.603	1.12	183	79	73	.577	4	2.884	196.508	242	242	55
2	1.4	1.183	1705	199.363	1.05	183	81	74	.557	3	2.786	199.392	243	244	56
3	1.4	1.183	1710	202.207	1.05	183	82	74	.557	3	2.786	202.178	244	243	60
3	1.2	1.095	1715	204.988	.899	183	79	74	.516	3	2.580	204.964	242	242	64
	8.4	7.094	1720	207.622	6.29	1100	479	439				207.544			
				16.784											
3-1	1.6	1.265	1725	207.622	1.20	183	79	72	.596	4	2.979		242	242	56
1	1.5	1.225	1730	210.641	1.12	184	79	71	.577	3	2.884	210.601	242	242	60
2	1.6	1.265	1735	213.511	1.20	184	78	72	.596	4	2.979	213.485	243	242	60
2	1.4	1.183	1740	216.521	1.05	184	79	71	.557	3	2.786	216.463	242	242	60
3	1.3	1.140	1745	219.235	.97	184	79	70	.537	3	2.685	219.249	242	242	63
3	1.4	1.183	1750	221.944	1.05	183	78	70	.557	3	2.786	221.934	242	243	63
	8.8	7.261	1755	224.856	6.59	1102	472	426				224.726			
				17.234											

Form 1026 [Rev. 5/27]

© Mostardi Platt Associates, Inc

FIELD TEST DATA SHEET
FOR ISOKINETIC SAMPLING

MOSTARDI-PLATT ASSOCIATES, INC.

PROJECT GRAND RIVER DAM AUTHORITY (GRDA)
TEST RUN NO. 3 (Hg SPECIATION)
TEST LOCATION UNIT 2 STACK

DATE 9/22/99 PAGE 2 OF 2

Port-Point No.	Velocity Head (P) in. H_2O	$\sqrt{P}$	Clock Time 24 hr.	Meter Volume (Vm) ft^3	.749 Orifice (H) in. H_2O	Stack Temp (t_s) °F	Meter Temp. (t_m) Inlet °F	Meter Temp. (t_m) Outlet °F	.471 Meter Rate cfm	Pump Vacuum in. Hg	x5 Notes		Probe Temp. °F	Filter Holder Temp. °F	Impinger Outlet Temp. °F
4-1	1.4	1.183	1800	224.856	1.05	183	77	73	.557	3	2.786		241	242	62
1	1.5	1.225	1805	227.813	1.12	184	79	72	.577	3	2.884	227.642	242	241	60
2	1.5	1.225	1810	230.535	1.12	182	81	72	.577	3	2.884	230.526	242	243	65
2	1.5	1.225	1815	233.419	1.12	183	79	71	.577	3	2.884	233.410	242	243	66
3	1.2	1.095	1820	236.328	.899	183	79	71	.516	3	2.579	236.294	243	243	62
3	1.2	1.095	1825	238.880	.899	184	78	70	.516	3	2.579	238.874	243	241	60
	8.3	7.048	1830	241.452	6.208	1099	473	429				241.453			
				16.596											
	1.42	1.19			1.06	183.5	78.7	71.75							
				67.634			75.2								

95

© Mostardi Platt Associates, Inc

PITOT TRAVERSE DATA

Project: GRAND RIVER DAM AUTHORITY (GRDA)

Location: UNIT 2

Date: 9/21/99 Test No: 1 Time: 1530-1605

22.62
49.54
89.14

Point No.	ΔP	$\sqrt{\Delta P}$	t_s	α	Point No.	ΔP	$\sqrt{\Delta P}$	t_s	α
1-1	1.5		185	9					
2	1.5		185	0					
3	1.3		184	0					
2-1	1.4		185	0					
2	1.5		184	0					
3	1.3		183	12					
3-1	1.5		184	0					
2	1.6		183	9					
3	1.2		182	0					
4-1	1.5		184	2					
2	1.5		182	0					
3	1.5		184	0					
		1.1998	183.75						

.044
.146
.296

22 FT = DIA
264 IN
11 IN PORT

P_{bar} _____ "Hg Static 0.7 "H_2O P_g _____ "Hg P_s _____ "Hg Pitot ID 3524 C_p .835 Temp. ID E-42

0.44 × _____ %CO_2 = _____ $\sqrt{\Delta P}$ _____ t_s _____ °F T _____ °R Flue Area 380.133 ft²

0.32 × _____ %O_2 = + _____ Duct Dimensions _____

0.28 × _____ %N_2 = + _____ B_{ws} _____ 1 - B_{ws} _____ Disturbance: Upstream _____

(_____ Md × _____ 1-B_{ws}) + (18 × _____ B_{ws}) = _____ (Ms) Downstream _____

$$v_s = 85.49 \times .835\ Cp \times \sqrt{\frac{(_____)Ts\ °R}{_____ Ms \times _____ Ps}} \times _____ \sqrt{\Delta P} = _____ \text{ ft/sec (Vs)}$$

Q_{acfm} = _____ Vs × 380.133 Flue Area × 60 = _____ acfm Port Length 11 Inches

$$Q_{dscfm} = 17.647 \times ACFM \times \frac{Ps}{Ts\ °R} = _____ \text{ SCFM}$$

$$Q_{dscfm} = 17.647 \times ACFM \times \frac{Ps}{Ts\ °R} \times (1\text{-}Bws) = _____ \text{ DSCFM}$$

Pre-test leak check ✓ "H_2O

Post-test leak check _____ "H_2O

Data Taken By: JG / NS

Field Engineer / Test Technician

Form 1012 [Rev. 5-97]

© Mostardi-Platt Associates, Inc.

TYPE S PITOT TUBE INSPECTION DATA FORM

Pitot tube assembly level? x yes ____ no

Pitot tube openings damaged? ____ yes (explain below) x no

α_1 = 0.5 ° (<10°), α_2 = 1 ° (<10°) z = A sin γ = 0.027 (in.); (<0.125 in.)

β_1 0 ° (<5°), β_2 = 4 ° (<5°) w = A sin θ = 0.007 (in.); (<0.03125 in.)

γ = 2 °, θ = 0.5 °, A = 0.768 (in.) P_A 0.38 (in.), P_B = 0.38 (in.), D_t = 0.213 (in.)

Comments: 11' 7" M5 probe

Calibration required? ____ yes x no

Pitot Tube No.: 434 Date: 07/07/1999 Name: SCK

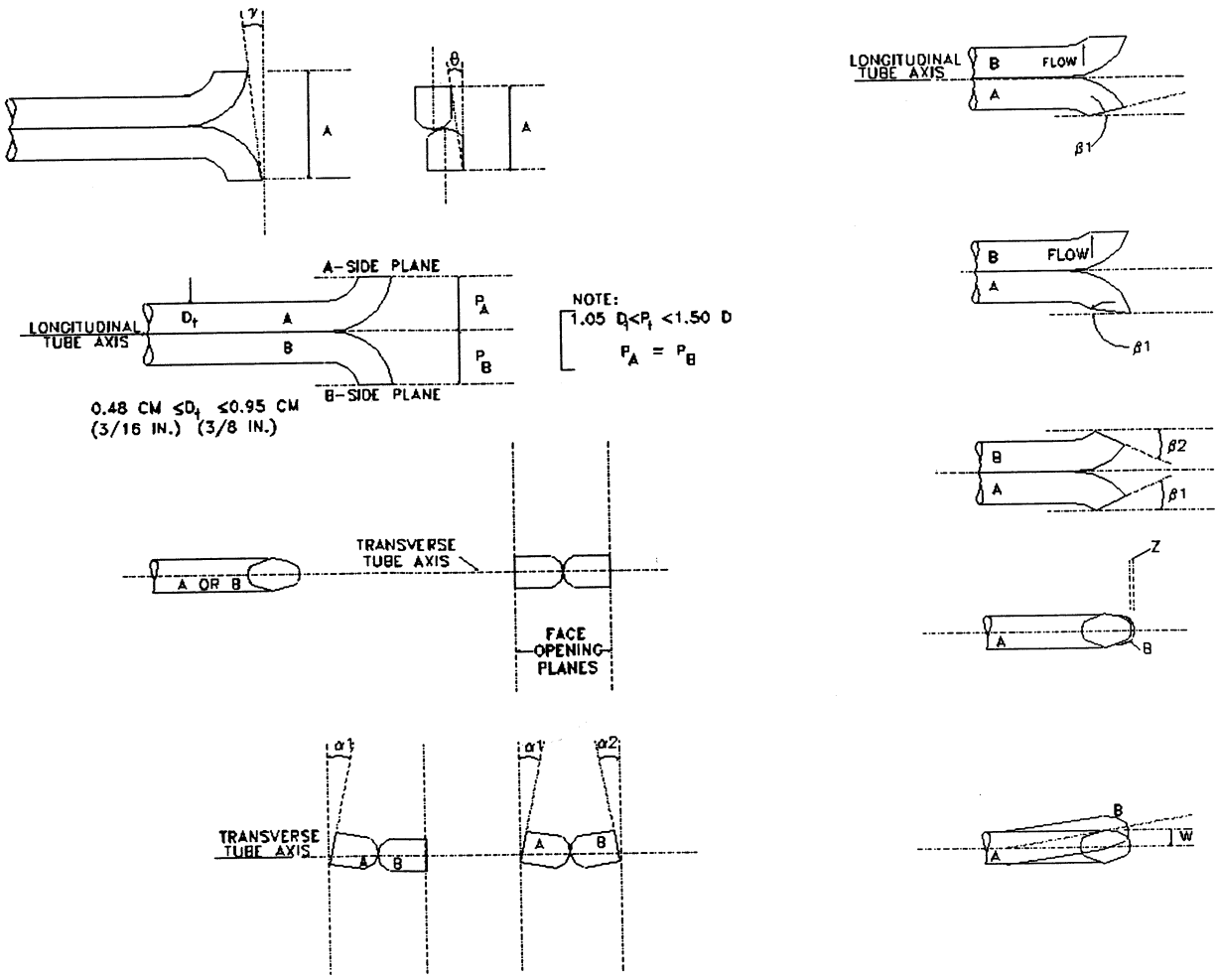

Pitot Tube Calibration Data

Calibration Pitot Tube: Type: HEMI STD Size (OD): 1/4" Pitot ID #: 16018

Type "S" Pitot Tube ID Number: 434 (1/4") Cp(std) = 0.99

Calibration Date: 12/4/1997 Performed By: M. McIntyre

P_{std}, (in.) H_2O		A-Side Calibration		
Set Value	Read Value	P_s, (in.) H_2O	$C_{p(S)}$ [a]	DEV. [b]
0.25	0.27	0.39	0.829	0.001
0.55	0.55	0.78	0.830	0.000
0.85	0.85	1.20	0.831	0.000
1.00	1.05	1.50	0.828	0.002
2.00	2.00	2.80	0.837	0.006
3.00	3.00	4.30	0.827	0.003
		Average	0.830	0.002

P_{std}, (in.) H_2O		B-Side Calibration		
Set Value	Read Value	P_s, (in.) H_2O	$C_{p(S)}$ [a]	DEV. [b]
0.25	0.26	0.37	0.830	0.001
0.55	0.55	0.78	0.830	0.001
0.85	0.85	1.20	0.831	0.001
1.00	1.05	1.50	0.828	0.003
2.00	2.00	2.80	0.837	0.005
3.00	3.00	4.25	0.832	0.000
		Average	0.831	0.002

$\overline{C_p}(A) - \overline{C_p}(B) =$ 0.001 ***(must be ≤ 0.01)***

[a] $C_{p(S)} = C_{p(std)}\sqrt{\frac{\Delta P_{std}}{\Delta P_s}}$

[b] $DEV = C_{p(S)} - \overline{C_p}$, (must be ≤ 0.01)

TYPE S PITOT TUBE INSPECTION DATA FORM

Pitot tube assembly level? x yes ____ no

Pitot tube openings damaged? ____ yes (explain below) x no

α_1 = 6 ° (<10°), α_2 = 5.5 ° (<10°) z = A sin γ = 0.041 (in.); (<0.125 in.)

β_1 4.5 ° (<5°), β_2 = 1 ° (<5°) w = A sin θ = 0.034 (in.); (<0.03125 in.)

γ = 3 °, θ = 2.5 °, A = 0.776 (in.) P_A 0.39 (in.), P_B = 0.38 (in.), D_t = 0.146 (in.)

Comments: 8' 0" M5 probe

Calibration required? ____ yes x no

Pitot Tube No.: 352 Date: 07/07/1999 Name: SCK

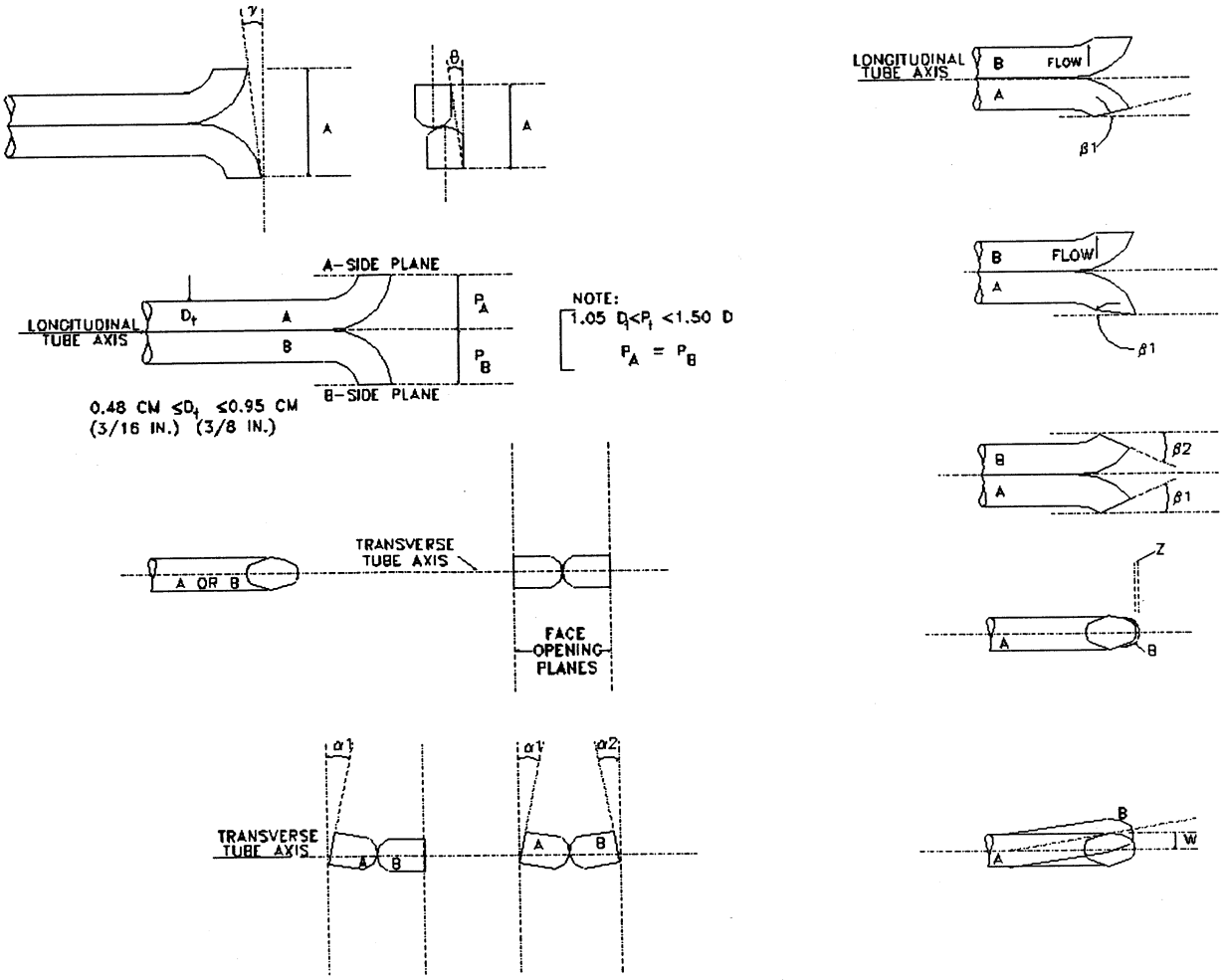

Pitot Tube Calibration Data

Calibration Pitot Tube: Type: Hemi Std. Size (OD): 0.25 Pitot ID #: 160-18

Type "S" Pitot Tube ID Number: 352 Cp(std) = 0.99

Calibration Date: 7/17/96 Performed By: RQJ

P_{std}, (in.) H_2O		A-Side Calibration		
Set Value	Read Value	P_s, (in.) H_2O	$C_{p(S)}$ [a]	DEV. [b]
0.25	0.25	0.35	0.837	0.002
0.55	0.56	0.79	0.836	0.001
0.85	0.87	1.25	0.826	0.009
1.00	1.00	1.40	0.837	0.002
2.00	1.90	2.65	0.838	0.004
3.00	2.95	4.15	0.835	0.000
		Average	0.835	0.003

P_{std}, (in.) H_2O		B-Side Calibration		
Set Value	Read Value	P_s, (in.) H_2O	$C_{p(S)}$ [a]	DEV. [b]
0.25	0.25	0.35	0.837	0.002
0.55	0.56	0.79	0.836	0.001
0.85	0.87	1.25	0.826	0.009
1.00	1.00	1.40	0.837	0.002
2.00	1.90	2.65	0.838	0.004
3.00	2.95	4.15	0.835	0.000
		Average	0.835	0.003

$\overline{C_p}(A) - \overline{C_p}(B) =$ 0.000 ***(must be ≤ 0.01)***

[a] $C_{p(S)} = C_{p(std)}\sqrt{\frac{\Delta P_{std}}{\Delta P_s}}$

[b] $DEV = C_{p(S)} - \overline{C_p}$, (must be ≤ 0.01)

STACK TEMPERATURE SENSOR CALIBRATION DATA FORM (FOR K-TYPE THERMOCOUPLES)

EPA Control Module Number: E42 Name: Rich Russ

Ambient Temperature: 76 °F Date: 09-17-99

Model 1061; S/N: A20821 Reference Source (T/C Calibrator): Transmation, Inc.

Date of Calibration Verification: 10/18/94

Primary Standards Directly Traceable to
National Institute of Standards and Technology (NIST)

Reference[a] Source Temperature, (°F)	Test Thermometer Temperature, (°F)	Temperature Difference,[b] %
50	50	0.000
100	100	0.000
150	150	0.000
200	200	0.000
250	250	0.000
300	300	0.000
350	350	0.000
400	400	0.000
450	450	0.000
500	500	0.000
550	550	0.000
600	600	0.000
650	650	0.000
700	700	0.000
800	800	0.000
900	900	0.000
1000	1000	0.000
1100	1100	0.000
1200	1200	0.000

[a]Every (50°F) for each reference point.

$$\frac{(\text{Ref. Temp., °F} + 460) - (\text{Test Therm. Temp., °F} + 460)}{\text{Ref. Temp., °F} + 460} * 100 <= 1.5\ \%$$

STACK TEMPERATURE SENSOR CALIBRATION DATA FORM (FOR K-TYPE THERMOCOUPLES)

EPA Control Module Number: E17 Name: Rich Russ

Ambient Temperature: 67 °F Date: 09-16-99

Model 1061; S/N: A20821 Reference Source (T/C Calibrator): Transmation, Inc.

Date of Calibration Verification: 10/18/94

Primary Standards Directly Traceable to
National Institute of Standards and Technology (NIST)

Reference[a] Source Temperature, (°F)	Test Thermometer Temperature, (°F)	Temperature Difference,[b] %
50	51	0.196
100	101	0.179
150	151	0.164
200	200	0.000
250	250	0.000
300	300	0.000
350	350	0.000
400	400	0.000
450	450	0.000
500	500	0.000
550	550	0.000
600	600	0.000
650	650	0.000
700	700	0.000
800	800	0.000
900	900	0.000
1000	1000	0.000
1100	1100	0.000
1200	1200	0.000

[a]Every (50°F) for each reference point.

$$\frac{(\text{Ref. Temp., °F} + 460) - (\text{Test Therm. Temp., °F} + 460)}{\text{Ref. Temp., °F} + 460} * 100 <= 1.5\ \%$$

Nozzle Calibration

Date: 9/21/99

Nozzle ID No.: #8

Analyst: J. Geiger

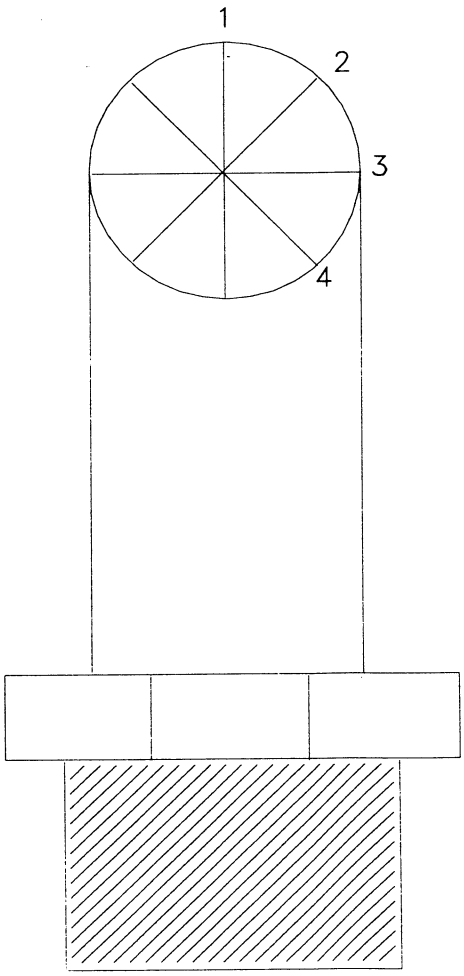

Pre Test		Post Test
0.239	1	√
0.240	2	√
0.240	3	√
0.240	4	√

Average
0.240

© Mostardi-Platt Associates, Inc.

Nozzle Calibration

Date: 9/21/99

Nozzle ID No.: #6

Analyst: J. Geiger

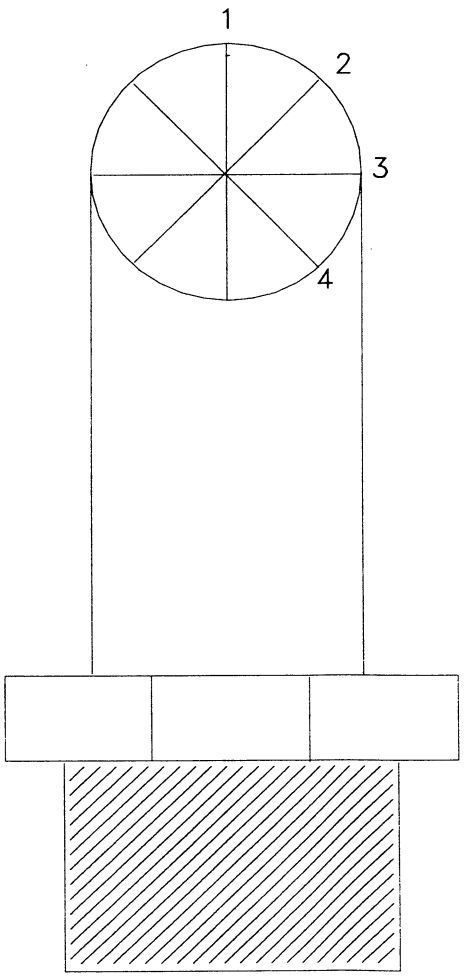

Pre Test		Post Test
0.180	1	√
0.179	2	√
0.179	3	√
0.180	4	√

Average
0.180

© Mostardi-Platt Associates, Inc.

Nozzle Calibration

Date: 9/21/99

Nozzle ID No.: N/A

Analyst: J. Geiger

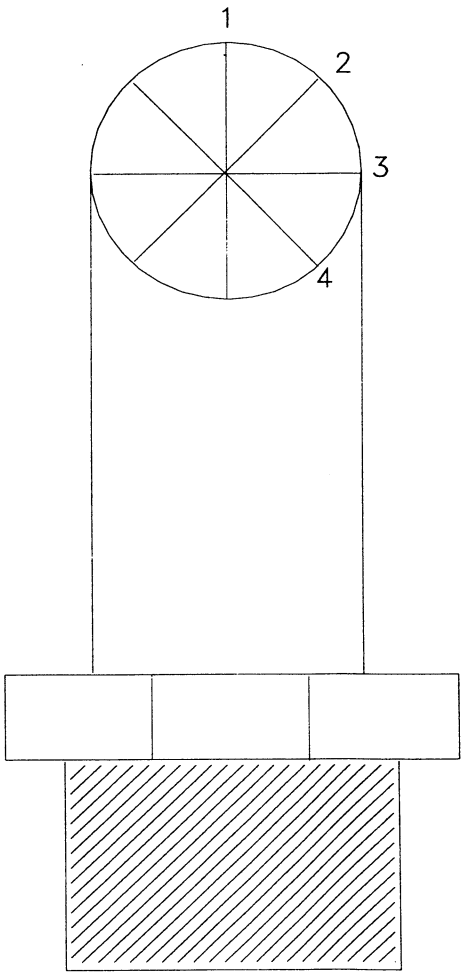

Pre Test		Post Test
0.180	1	√
0.180	2	√
0.180	3	√
0.180	4	√

Average
0.180

© Mostardi-Platt Associates, Inc.

METER BOX CALIBRATION

Dry Gas Meter No.	E17	Date:	09-16-99
Standard Meter No.	3623851	Calibrated By:	Rich Russ
Standard Meter (Yr)	1.0063	Barometric Pressure :	29.54

Formula Protection Password: MPA

Run Number		Orifice Setting in H20 Chg (H)	Standard Meter Gas Volume Vr	Dry Meter Gas Volume Vd	Standard Meter Temp. F tr	Dry Gas Meter Inlet Temp. F tdi	Dry Gas Meter Outlet Temp. F tdo	Dry Gas Meter Avg. Temp. F td	Time Min.	Time Sec.	Y	Chg (H@)
Final			102.251	49.514	69	79	74					
Inital			97.097	44.262	68	76	71					
Difference	1	0.20	5.154	5.252	68.5	77.5	72.5	75	18	35	0.993	1.456
Final			16.712	64.372	69	84	78					
Inital			10.020	57.478	69	82	76					
Difference	2	0.50	6.692	6.894	69	83	77	80	15	41	0.990	1.526
Final			96.021	43.155	68	79	70					
Inital			89.925	37.010	68	74	67					
Difference	3	0.70	6.096	6.145	68	76.5	68.5	72.5	12	2	0.999	1.531
Final			26.487	74.414	69	87	80					
Inital			20.366	68.122	69	85	79					
Difference	4	0.90	6.121	6.292	69	86	79.5	82.75	10	54	0.996	1.578
Final			32.926	81.047	69	88	80					
Inital			27.075	75.024	69	86	80					
Difference	5	1.20	5.851	6.023	69	87	80	83.5	8	44	0.995	1.476
Final			41.669	89.984	70	83	79					
Inital			36.262	84.459	69	80	79					
Difference	6	2.00	5.407	5.525	69.5	81.5	79	80.25	6	30	0.994	1.609
									Average		0.994	1.529

VOLUME METERING SYSTEM FIELD AUDIT

Date: 09-16-99

Name: Rich Russ

EPA Control Module No.: E17

Ambient Temperature: 69 °F

Calibration (Y): 0.994

Barometric Pressure: 29.54 "Hg

Delta H: 1.529

#VALUE!

Run No.	Time (Minutes)	Gas Meter Reading/Gas Meter Temperature (Cubic Feet)	Inlet (°F)	Outlet (°F)	Yc (Calculated)
1	0	93.308	82	78	1.019
	10	100.807	86	79	
	Vm=	7.499	Avg.= 81.25	541.25	
2	0	1.941	86	79	1.023
	10	9.430	89	80	
	Vm=	7.489	Avg.= 83.50	543.50	
3	0	10.126	87	80	1.021
	10	17.632	89	81	
	Vm=	7.506	Avg.= 84.25	544.25	

$$Yc = \frac{10}{Vm}\sqrt{\frac{Pbar}{0.0319Tm}}$$

Limit: 0.97Y < Yc < 1.03Y

Limit: 0.964 < Yc < 1.024

$$\text{Calc. Delta H @} = \frac{0.0319\ (\text{Delta H})(Tm)(100)}{Pbar(Y^2)(Vm^2)}$$ (From Calibration Data) = 1.607

METER BOX CALIBRATION

Dry Gas Meter No.	E42	Date:	09-17-99
Standard Meter No.	3623851	Calibrated By:	Rich Russ
Standard Meter (Yr)	1.0063	Barometric Pressure :	29.60

Formula Protection Password: MPA

Run Number		Orifice Setting in H20 Chg (H)	Standard Meter Gas Volume Vr	Dry Meter Gas Volume Vd	Standard Meter Temp. F tr	Dry Gas Meter Inlet Temp. F tdi	Dry Gas Meter Outlet Temp. F tdo	Dry Gas Meter Avg. Temp. F td	Time Min.	Time Sec.	Y	Chg (H@)
Final			56.131	68.904	74	81	77					
Inital			51.082	63.828	74	79	75					
Difference	1	0.20	5.049	5.076	74	80	76	78	20	11	1.002	1.813
Final			67.456	80.318	75	85	81					
Inital			62.326	75.146	75	84	79					
Difference	2	0.50	5.130	5.172	75	84.5	80	82.25	13	15	1.004	1.884
Final			50.290	63.034	74	79	74					
Inital			44.234	56.972	74	78	73					
Difference	3	0.70	6.056	6.062	74	78.5	73.5	76	13	22	1.001	1.942
Final			62.176	74.988	75	85	79					
Inital			56.920	69.695	74	81	78					
Difference	4	0.90	5.256	5.293	74.5	83	78.5	80.75	10	15	1.002	1.935
Final			73.025	85.928	75	89	82					
Inital			67.750	80.602	75	85	81					
Difference	5	1.20	5.275	5.326	75	87	81.5	84.25	8	56	1.005	1.937
Final			80.744	93.697	75	92	83					
Inital			74.556	87.479	75	88	82					
Difference	6	2.00	6.188	6.218	75	90	82.5	86.25	8	16	1.011	2.002
									Average		1.004	1.919

©MOSTARDI-PLATT ASSOCIATES, INC.

VOLUME METERING SYSTEM FIELD AUDIT

Date: 09-17-99

Name: Rich Russ

EPA Control Module No.: E42

Ambient Temperature: 76 °F

Calibration (Y): 1.004

Barometric Pressure: 29.6 "Hg

Delta H: 1.919

#VALUE!

Run No.	Time (Minutes)	Gas Meter Reading/Gas Meter Temperature (Cubic Feet)	Inlet (°F)	Outlet (°F)	Yc (Calculated)
1	0	98.807	87	84	1.020
	10	106.331	91	84	
	Vm=	7.524	Avg.= 86.50	546.50	
2	0	7.400	91	84	1.028
	10	14.878	93	85	
	Vm=	7.478	Avg.= 88.25	548.25	
3	0	23.062	92	86	1.028
	10	30.546	94	86	
	Vm=	7.484	Avg.= 89.50	549.50	

$$Yc = \frac{10}{Vm}\sqrt{\frac{Pbar}{0.0319Tm}}$$

Limit: $0.97Y < Yc < 1.03Y$

Limit: $0.974 < Yc < 1.034$

$$\text{Calc. Delta H @} = \frac{0.0319\,(\text{Delta H})(Tm)(100)}{Pbar(Y^2)(Vm^2)}$$ (From Calibration Data) = 1.943

ONTARIO HYDRO METHOD TEST SUPPORT DATA

PROJECT NO.: 93803 **TEST RUN NO.:** 1 **TEST DATE:** 9/22/99

CUSTOMER:	Grand River Dam Authority	**BAROMETRIC PRESSURE (Pb)**	29.44 **in. Hg.**
PLANT:	Chouteau, Oklahoma	**STATIC PRESSURE**	-19 **in. H2O**
TEST LOC.:	Unit 2 FGD Inlet	**FLUE PRESSURE (Ps)**	28.04 **in. Hg. abs.**
CLIENT:	Grand River Dam Authority	**PROBE LENGTH:**	12 **ft.**
OPERATOR:	J. Platt	**PROBE LINER MATERIAL:**	Teflon
CONTROL BOX:	E-17	**NOZZLE IDENTIFICATION NO.:**	#8
METER NO.:	E-17	**CALIBRATED NOZZLE DIAMETER:**	0.240 **in.**
METER CALIBRATION FACTOR:	0.994	**LEAK CHECK PRE:**	0.000 **POST:** 0.000 @ 18 in. Hg.
PITOT ID NO.:	434A	**DUCT SHAPE:**	Circular DIA. Feet Rectangular 16 Feet 32.5 Feet
PITOT TUBE COEFFICIENT:	0.830	**DUCT AREA:**	520 **sq. ft.**
PORT LENGTH:	30 in.	**TEST LENGTH:**	110 **min.**
PORT SIZE:	4 in.	**MINUTES PER POINT:**	5
PORT TYPE:	Flange	**TOTAL NUMBER OF TRAVERSE POINTS:**	22

ONTARIO HYDRO METHOD TRAVERSE DATA

Company: Grand River Dam Authority **Date:** 9/22/99 **Test Run:** 1

Location: Unit 2 FGD Inlet

Point	Δp	Sq. Root Δp	Time	Volume cubic feet	ΔH	Stack Temp °F	Meter Inlet °F	Meter Outlet °F	Vacuum in. Hg	
1-1	1.00	1.000	9:30	18.55	1.56	322	62	58	5	3.750
1-2	0.95	0.975	9:35	22.30	1.48	320	63	60	5	3.700
1-3	0.80	0.894	9:40	26.00	1.25	320	65	61	5	3.400
1-4	0.75	0.866	9:45	29.40	1.17	310	66	61	5	3.250
1-5	0.66	0.812	9:50	32.65	1.03	315	68	63	5	3.150
			9:55	35.80						0.000
2-1	1.00	1.000	9:57	36.10	1.56	309	70	65	5	3.650
2-2	0.80	0.894	10:02	39.75	1.25	309	74	68	5	3.400
2-3	0.85	0.922	10:07	43.15	1.33	312	76	70	5	3.550
2-4	0.80	0.894	10:12	46.70	1.25	311	78	72	5	3.500
2-5	0.60	0.775	10:17	50.20	0.94	311	80	74	5	3.100
			10:22	53.30						0.000
3-1	0.62	0.787	10:26	54.00	0.97	298	87	77	5	3.050
3-2	0.62	0.787	10:31	57.05	0.97	301	87	77	5	2.950
3-3	0.60	0.775	10:36	60.00	0.94	303	87	80	5	3.000
3-4	0.65	0.806	10:41	63.00	1.01	307	87	81	5	3.000
3-5	0.42	0.648	10:46	66.00	0.66	304	87	81	5	2.550
			10:51	68.55						0.000
4-1	0.90	0.949	10:52	68.95	1.40	304	87	81	5	3.350
4-2	0.85	0.922	10:57	72.30	1.33	307	88	81	5	3.600
4-3	0.80	0.894	11:02	75.90	1.25	307	88	81	5	3.300
4-4	0.75	0.866	11:07	79.20	1.17	309	89	82	5	3.300
4-5	0.60	0.775	11:12	82.50	0.94	312	90	82	5	3.130
			11:17	85.63						0.000
5-1	0.90	0.949	11:19	85.74	1.40	321	90	85	5	3.260
5-2	0.90	0.949	11:24	89.00	1.40	321	91	86	5	3.300
			11:29	92.30						0.000
										0.000
										0.000
										0.000
										0.000
										0.000
										0.000
										0.000
										0.000
										0.000
										0.000
										0.000
		0.870		72.240	1.19	311	80	74		#####
							76.95			

MOISTURE, DILUENT AND MERCURY DATA

Company Grand River Dam Authority **Date:** 9/22/99 **Test Run:** 1

Location: Unit 2 FGD Inlet

SILICA GEL FINAL WT.:	762.20	**grams**
SILICA GEL INITIAL WT.:	742.60	**grams**
DIFFERENCE:	19.60	
FINAL IMPINGER WATER:	5037.10	**mls.**
INITIAL IMPINGER WATER:	4843.70	**mls.**
DIFFERENCE:	193.40	
TOTAL WATER GAIN:	213.00	

ITEM	MERCURY (UG)		= NET WT. (G)
FILTER:	0.425		0.000000425
PROBE WASH:	0.002		0.000000002
		Particle-bound Total:	0.000000427
KCl:	7.555		0.000007555
		Oxidized Total:	0.000007555
HNO_3/H_2O_2:	0.626		0.000000626
$KMNO_4$:	12.655		0.000012655
		Elemental Total:	0.000013281

Orsat Analysis	1	2	3	Average
Carbon Dioxide:	13.20	13.20	13.20	13.20
Oxygen:	5.40	5.40	5.40	5.40

ONTARIO HYDRO METHOD DATA ENTRY FORM

Field Data/Calculated Data

Company:	Grand River Dam Authority
Date:	9/22/99
Test Run:	1
Stack or Duct No.:	Unit 2 FGD Inlet
Start Time:	9:30
Stop Time:	11:29

Pb:	29.44	Inches Hg
Static	-19.00	Inches H2O
Ps:	28.04	Inches Hg Abs.
Vlc:	213	ml + grams
Mn:	0.0000	gm
Test Time:	110	minutes
% O2:	5.40	%
% CO2:	13.20	%
% N2:	81.40	%
Delta H:	1.19	Inches H20
Cp:	0.830	Dimensionless - pitot
Tm:	76.95	°F
Sqrt P:	0.870	Inches H20
Ts:	310.59	°F
Vm:	72.240	Cubic Feet
Dn:	0.240	Inches - nozzle
As:	520.00	Sq. Feet
Yd:	0.994	Mcf
CF:	N/A	Process tons/hr
Heat Input:	N/A	MM BTU/hr
Fd:	N/A	dscf/10^6 Btu
Fc:	N/A	scf/10^6 Btu

Vmstd:	69.683	cubic feet (dry)
Vwstd:	10.032	cubic feet (wet)
Bwo:	0.126	
Md:	30.328	lb/lb-mole (dry)
Ms:	28.777	lb/lb-mole (wet)
Excess Air (%)	33.562	
Vs:	60.324	fps
ACFM:	1882095.	
DSCFM:	1056568.	
WSCFM:	1208682	
%I:	99.3	isokinetic variance
GR/ACF:	---	
GR/DSCF:	---	
lbs/hr	---	
lbs/ton prod.:	N/A	
lbs/MM BTU:	N/A	Heat Input
lbs/MM BTU:	N/A	O2 Basis
lbs/MM BTU:	N/A	CO2 Basis

ONTARIO HYDRO METHOD TEST SUPPORT DATA

PROJECT NO.: 93803 **TEST RUN NO.:** 2 **TEST DATE:** 9/22/99

CUSTOMER: Grand River Dam Authority

PLANT: Chouteau, Oklahoma

TEST LOC.: Unit 2 FGD Inlet

CLIENT: Grand River Dam Authority

OPERATOR: J. Platt

CONTROL BOX: E-17

METER NO.: E-17

METER CALIBRATION FACTOR: 0.994

PITOT ID NO.: 434A

PITOT TUBE COEFFICIENT: 0.830

PORT LENGTH: 30 in.

PORT SIZE: 4 in.

PORT TYPE: Flange

BAROMETRIC PRESSURE (Pb) 29.44 **in. Hg.**

STATIC PRESSURE -19.2 **in. H2O**

FLUE PRESSURE (Ps) 28.03 **in. Hg. abs.**

PROBE LENGTH: 12 **ft.**

PROBE LINER MATERIAL: Teflon

NOZZLE IDENTIFICATION NO.: #8

CALIBRATED NOZZLE DIAMETER: 0.240 **in.**

LEAK CHECK **PRE:** 0.010 **POST:** 0.000 @ 19 in. Hg.

DUCT SHAPE: Circular DIA. Feet
Rectangular 16 Feet 32.5 Feet

DUCT AREA: 520 **sq. ft.**

TEST LENGTH: 125 **min.**

MINUTES PER POINT: 5

TOTAL NUMBER OF TRAVERSE POINTS: 25

ONTARIO HYDRO METHOD TRAVERSE DATA

Company: Grand River Dam Authority **Date:** 9/22/99 **Test Run:** 2

Location: Unit 2 FGD Inlet

Point	Δp	Sq. Root Δp	Time	Volume cubic feet	ΔH	Stack Temp °F	Meter Inlet °F	Meter Outlet °F	Vacuum in. Hg	
1-1	1.00	1.000	12:45	92.64	1.09	324	93	93	8	3.860
1-2	0.90	0.949	12:50	96.50	1.52	320	93	93	8	3.900
1-3	0.80	0.894	12:55	100.40	1.35	321	94	94	8	3.400
1-4	0.70	0.837	13:00	103.80	1.18	317	95	93	8	3.400
1-5	0.60	0.775	13:05	107.20	1.01	314	95	93	8	3.150
			13:10	110.35						0.000
2-1	0.85	0.922	13:12	110.50	1.44	314	95	93	8	3.500
2-2	0.85	0.922	13:17	114.00	1.44	312	96	93	8	3.800
2-3	0.80	0.894	13:22	117.80	1.35	319	96	93	9	3.200
2-4	0.80	0.894	13:27	121.00	1.35	315	96	94	9	3.900
2-5	0.68	0.825	13:32	124.90	1.15	313	96	94	9	3.250
			13:37	128.15						0.000
3-1	0.63	0.794	13:45	128.55	1.06	301	94	92	9	4.050
3-2	0.60	0.775	13:57	132.60	1.01	303	95	93	8	3.200
3-3	0.60	0.775	14:02	135.80	1.01	306	98	93	8	3.200
3-4	0.60	0.775	14:07	139.00	1.01	309	100	94	8	3.200
3-5	0.45	0.671	14:12	142.20	0.76	312	101	95	8	2.800
			14:17	145.00						0.000
4-1	0.95	0.975	14:18	145.23	1.01	307	100	95	12	3.770
4-2	0.95	0.975	14:23	149.00	1.61	307	98	95	12	4.000
4-3	0.83	0.911	14:28	153.00	1.40	309	95	94	12	3.200
4-4	0.80	0.894	14:33	156.20	1.35	310	93	93	12	3.800
4-5	0.60	0.775	14:38	160.00	1.01	312	93	93	12	3.200
			14:43	163.20						0.000
5-1	0.95	0.975	14:46	163.45	1.60	323	93	93	18	4.050
5-2	0.95	0.975	14:51	167.50	1.60	322	63	62	18	3.500
5-3	0.95	0.975	14:56	171.00	1.60	322	94	93	18	3.800
5-4	0.85	0.922	15:01	174.80	1.44	321	95	93	18	4.050
5-5	0.60	0.775	15:06	178.85	1.01	314	94	94	18	3.000
			15:11	181.85						0.000
										0.000
										0.000
										0.000
										0.000
										0.000
										0.000
										0.000
										0.000
		0.874		88.180	1.25	314	94	92		#####
							93.20			

MOISTURE, DILUENT AND MERCURY DATA

Company Grand River Dam Authority **Date:** 9/22/99 **Test Run:** 2

Location: Unit 2 FGD Inlet

SILICA GEL FINAL WT.:	755.20	**grams**
SILICA GEL INITIAL WT.:	729.00	**grams**
DIFFERENCE:	26.20	
FINAL IMPINGER WATER:	4966.30	**mls.**
INITIAL IMPINGER WATER:	4760.80	**mls.**
DIFFERENCE:	205.50	
TOTAL WATER GAIN:	231.70	

ITEM	MERCURY (UG)		= NET WT. (G)
FILTER:	1.050		0.000001050
PROBE WASH:	0.009		0.000000009
		Particle-bound Total:	0.000001059
KCl:	5.935		0.000005935
		Oxidized Total:	0.000005935
HNO_3/H_2O_2:	0.848		0.000000848
$KMNO_4$:	12.155		0.000012155
		Elemental Total:	0.000013003

Orsat Analysis	1	2	3	Average
Carbon Dioxide:	13.00	13.00		13.00
Oxygen:	5.60	5.60		5.60

ONTARIO HYDRO METHOD DATA ENTRY FORM

Field Data/Calculated Data

Company:	Grand River Dam Authority
Date:	9/22/99
Test Run:	2
Stack or Duct No.:	Unit 2 FGD Inlet
Start Time:	12:45
Stop Time:	15:11

Pb:	29.44	Inches Hg
Static	-19.20	Inches H2O
Ps:	28.03	Inches Hg Abs.
Vlc:	232	ml + grams
Mn:	0.0000	gm
Test Time:	125	minutes
% O2:	5.60	%
% CO2:	13.00	%
% N2:	81.40	%
Delta H:	1.25	Inches H20
Cp:	0.830	Dimensionless - pitot
Tm:	93.20	°F
Sqrt P:	0.874	Inches H20
Ts:	313.88	°F
Vm:	88.180	Cubic Feet
Dn:	0.240	Inches - nozzle
As:	520.00	Sq. Feet
Yd:	0.994	Mcf
CF:	N/A	Process tons/hr
Heat Input:	N/A	MM BTU/hr
Fd:	N/A	dscf/10^6 Btu
Fc:	N/A	scf/10^6 Btu

Vmstd:	82.574	cubic feet (dry)
Vwstd:	10.913	cubic feet (wet)
Bwo:	0.117	
Md:	30.304	lb/lb-mole (dry)
Ms:	28.868	lb/lb-mole (wet)
Excess Air (%)	35.243	
Vs:	60.651	fps
ACFM:	1892319.	
DSCFM:	1068265.	
WSCFM:	1209448	
%I:	102.4	isokinetic variance
GR/ACF:	---	
GR/DSCF:	---	
lbs/hr	---	
lbs/ton prod.:	N/A	
lbs/MM BTU:	N/A	Heat Input
lbs/MM BTU:	N/A	O2 Basis
lbs/MM BTU:	N/A	CO2 Basis

ONTARIO HYDRO METHOD TEST SUPPORT DATA

PROJECT NO.:	93803	**TEST RUN NO.:**	3	**TEST DATE:**	9/22/99

CUSTOMER:	Grand River Dam Authority	**BAROMETRIC PRESSURE (Pb)**	29.44 **in. Hg.**
PLANT:	Chouteau, Oklahoma	**STATIC PRESSURE**	-19.2 **in. H2O**
TEST LOC.:	Unit 2 FGD Inlet	**FLUE PRESSURE (Ps)**	28.03 **in. Hg. abs.**
CLIENT:	Grand River Dam Authority	**PROBE LENGTH:**	12 **ft.**
OPERATOR:	J. Platt	**PROBE LINER MATERIAL:**	Teflon
CONTROL BOX:	E-17	**NOZZLE IDENTIFICATION NO.:**	#6
METER NO.:	E-17	**CALIBRATED NOZZLE DIAMETER:**	0.180 **in.**
METER CALIBRATION FACTOR:	0.994	**LEAK CHECK** **PRE:**	0.000 **POST:** 0.000 @ 18 in. Hg.
PITOT ID NO.:	434A	**DUCT SHAPE:**	Circular DIA. Feet Rectangular 16 Feet 32.5 Feet
PITOT TUBE COEFFICIENT:	0.830	**DUCT AREA:**	520 **sq. ft.**
PORT LENGTH:	30 in.	**TEST LENGTH:**	125 **min.**
PORT SIZE:	4 in.	**MINUTES PER POINT:**	5
PORT TYPE:	Flange	**TOTAL NUMBER OF TRAVERSE POINTS:**	25

ONTARIO HYDRO METHOD TRAVERSE DATA

Company: Grand River Dam Authority **Date:** 9/22/99 **Test Run:** 3

Location: Unit 2 FGD Inlet

Point	Δp	Sq. Root Δp	Time	Volume cubic feet	ΔH	Stack Temp °F	Meter Inlet °F	Meter Outlet °F	Vacuum in. Hg	
1-1	1.00	1.000	16:22	82.67	0.53	318	92	91	6	2.330
1-2	0.90	0.949	16:27	85.00	0.48	323	92	91	6	2.150
1-3	0.75	0.866	16:32	87.15	0.40	319	92	91	6	2.010
1-4	0.65	0.806	16:37	89.16	0.34	319	93	91	6	1.940
1-5	0.60	0.775	16:42	91.10	0.32	311	94	92	6	1.750
			16:47	92.85						0.000
2-1	0.95	0.975	16:48	93.16	0.50	309	94	92	7	2.250
2-2	0.85	0.922	16:53	95.41	0.45	310	94	92	7	2.090
2-3	0.85	0.922	16:58	97.50	0.45	308	95	92	7	2.100
2-4	0.80	0.894	17:03	99.60	0.42	311	95	92	7	2.050
2-5	0.63	0.794	17:08	101.65	0.33	309	95	93	6	1.850
			17:13	103.50						0.000
3-1	0.60	0.775	17:17	103.85	0.32	295	94	93	6	1.830
3-2	0.55	0.742	17:22	105.68	0.29	300	94	93	6	1.720
3-3	0.55	0.742	17:27	107.40	0.29	306	94	93	6	1.700
3-4	0.60	0.775	17:32	109.10	0.32	309	94	93	6	1.680
3-5	0.45	0.671	17:37	110.78	0.24	312	93	92	6	1.670
			17:42	112.45						0.000
4-1	0.95	0.975	17:43	112.73	0.50	309	93	92	7	2.220
4-2	0.90	0.949	17:48	114.95	0.48	307	92	92	7	2.120
4-3	0.80	0.894	17:53	117.07	0.42	309	92	91	7	1.990
4-4	0.77	0.877	17:58	119.06	0.41	311	91	91	7	1.940
4-5	0.60	0.775	18:03	121.00	0.32	311	91	90	7	1.200
			18:08	122.20						0.000
5-1	1.00	1.000	18:09	123.00	0.53	319	91	90	7	2.200
5-2	1.00	1.000	18:14	125.20	0.53	324	91	90	8	2.400
5-3	1.00	1.000	18:19	127.60	0.53	322	91	90	8	2.150
5-4	0.95	0.975	18:24	129.75	0.50	320	90	89	8	2.400
5-5	0.75	0.866	18:29	132.15	0.40	320	90	89	8	2.100
			18:34	134.25						0.000
										0.000
										0.000
										0.000
										0.000
										0.000
										0.000
										0.000
										0.000
		0.877		49.840	0.41	312	93	91		#####
							92.04			

MOISTURE, DILUENT AND MERCURY DATA

Company Grand River Dam Authority **Date:** 9/22/99 **Test Run:** 3

Location: Unit 2 FGD Inlet

SILICA GEL FINAL WT.:	756.90	**grams**
SILICA GEL INITIAL WT.:	743.40	**grams**
DIFFERENCE:	13.50	
FINAL IMPINGER WATER:	5032.30	**mls.**
INITIAL IMPINGER WATER:	4903.80	**mls.**
DIFFERENCE:	128.50	
TOTAL WATER GAIN:	142.00	

ITEM	MERCURY (UG)		= NET WT. (G)
FILTER:	1.302		0.000001302
PROBE WASH:	0.021		0.000000021
		Particle-bound Total:	0.000001323
KCl:	10.195		0.000010195
		Oxidized Total:	0.000010195
HNO_3/H_2O_2:	0.231		0.000000231
$KMNO_4$:	4.075		0.000004075
		Elemental Total:	0.000004306

Orsat Analysis	1	2	3	Average
Carbon Dioxide:	13.00	13.00	13.00	13.00
Oxygen:	5.20	5.20	5.20	5.20

ONTARIO HYDRO METHOD DATA ENTRY FORM

Field Data/Calculated Data

Company:	Grand River Dam Authority
Date:	9/22/99
Test Run:	3
Stack or Duct No.:	Unit 2 FGD Inlet
Start Time:	16:22
Stop Time:	18:34

Pb:	29.44	Inches Hg
Static	-19.20	Inches H2O
Ps:	28.03	Inches Hg Abs.
Vlc:	142	ml + grams
Mn:	0.0000	gm
Test Time:	125	minutes
% O2:	5.20	%
% CO2:	13.00	%
% N2:	81.80	%
Delta H:	0.41	Inches H20
Cp:	0.830	Dimensionless - pitot
Tm:	92.04	°F
Sqrt P:	0.877	Inches H20
Ts:	312.44	°F
Vm:	49.840	Cubic Feet
Dn:	0.180	Inches - nozzle
As:	520.00	Sq. Feet
Yd:	0.994	Mcf
CF:	N/A	Process tons/hr
Heat Input:	N/A	MM BTU/hr
Fd:	N/A	dscf/10^6 Btu
Fc:	N/A	scf/10^6 Btu

Vmstd:	46.671	cubic feet (dry)
Vwstd:	6.688	cubic feet (wet)
Bwo:	0.125	
Md:	30.288	lb/lb-mole (dry)
Ms:	28.748	lb/lb-mole (wet)
Excess Air (%)	31.717	
Vs:	60.904	fps
ACFM:	1900220.	
DSCFM:	1064250.	
WSCFM:	1216762	
%I:	103.3	isokinetic variance
GR/ACF:	---	
GR/DSCF:	---	
lbs/hr	---	
lbs/ton prod.:	N/A	
lbs/MM BTU:	N/A	Heat Input
lbs/MM BTU:	N/A	O2 Basis
lbs/MM BTU:	N/A	CO2 Basis

ONTARIO HYDRO METHOD TEST SUPPORT DATA

PROJECT NO.:	93803	**TEST RUN NO.:**	1	**TEST DATE:**	9/22/99

CUSTOMER:	Grand River Dam Authority	**BAROMETRIC PRESSURE (Pb)**	29.51 **in. Hg.**
PLANT:	Chouteau, Oklahoma	**STATIC PRESSURE**	-0.5 **in. H2O**
TEST LOC.:	Unit 2 Stack	**FLUE PRESSURE (Ps)**	29.47 **in. Hg. abs.**
CLIENT:	Grand River Dam Authority	**PROBE LENGTH:**	8 **ft.**
OPERATOR:	J. Geiger	**PROBE LINER MATERIAL:**	Glass
CONTROL BOX:	E-42	**NOZZLE IDENTIFICATION NO.:**	N/A
METER NO.:	E-42	**CALIBRATED NOZZLE DIAMETER:**	0.180 **in.**
METER CALIBRATION FACTOR:	1.004	**LEAK CHECK PRE:**	0.009 **POST:** 0.012 @ 13 in. Hg.
PITOT ID NO.:	352A	**DUCT SHAPE:**	Circular DIA. 22 Feet Rectangular Feet Feet
PITOT TUBE COEFFICIENT:	0.835	**DUCT AREA:**	380.13239 **sq. ft.**
PORT LENGTH:	11 in.	**TEST LENGTH:**	120 **min.**
PORT SIZE:	4 in.	**MINUTES PER POINT:**	10
PORT TYPE:	Nipple	**TOTAL NUMBER OF TRAVERSE POINTS:**	12

Mostardi Platt

ONTARIO HYDRO METHOD TRAVERSE DATA

Company: Grand River Dam Authority **Date:** 9/22/99 **Test Run:** 1

Location: Unit 2 Stack

Point	Δp	Sq. Root Δp	Time	Volume cubic feet	ΔH	Stack Temp °F	Meter Inlet °F	Meter Outlet °F	Vacuum in. Hg	
1-1	1.60	1.265	9:30	37.03	1.20	183	68	68	3	3.021
1-1	1.50	1.225	9:35	40.06	1.12	184	73	68	2	2.838
1-2	1.50	1.225	9:40	42.89	1.12	183	76	69	2	2.794
1-2	1.60	1.265	9:45	45.69	1.20	183	77	70	3	3.094
1-3	1.40	1.183	9:50	48.78	1.05	182	78	70	2	2.761
1-3	1.20	1.095	9:55	51.54	0.90	182	79	72	2	2.417
			10:00	53.96						0.000
2-1	1.50	1.225	10:06	53.96	1.12	183	77	72	3	2.889
2-1	1.50	1.225	10:11	56.85	1.12	183	79	73	3	2.883
2-2	1.40	1.183	10:16	59.73	1.05	183	79	73	3	2.794
2-2	1.40	1.183	10:21	62.53	1.05	183	79	73	3	2.729
2-3	1.30	1.140	10:26	65.25	0.97	182	80	73	3	2.602
2-3	1.20	1.095	10:31	67.86	0.89	182	81	73	3	2.618
			10:36	70.47						0.000
3-1	1.40	1.183	10:41	70.47	1.05	184	77	73	3	2.837
3-1	1.60	1.265	10:46	73.31	1.20	184	75	71	3	2.935
3-2	1.50	1.225	10:51	76.25	1.12	184	79	72	3	2.765
3-2	1.50	1.225	10:56	79.01	1.12	184	79	72	3	3.004
3-3	1.30	1.140	11:01	82.02	0.97	184	78	73	3	2.698
3-3	1.20	1.095	11:06	84.71	0.89	182	78	74	3	2.572
			11:11	87.29						0.000
4-1	1.50	1.225	11:18	87.29	1.12	183	76	73	3	2.937
4-1	1.50	1.225	11:23	90.22	1.12	186	77	74	3	2.899
4-2	1.60	1.265	11:28	93.12	1.20	184	77	73	3	2.810
4-2	1.40	1.183	11:33	95.93	1.05	184	78	73	3	2.974
4-3	1.40	1.183	11:38	98.91	1.05	182	78	73	3	2.832
4-3	1.30	1.140	11:43	101.74	0.97	183	79	73	3	2.554
			11:48	104.29						0.000
										0.000
										0.000
										0.000
										0.000
										0.000
										0.000
										0.000
										0.000
										0.000
										0.000
		1.194		67.257	1.07	183	77	72		#####
							74.69			

MOISTURE, DILUENT AND MERCURY DATA

Company Grand River Dam Authority **Date:** 9/22/99 **Test Run:** 1

Location: Unit 2 Stack

SILICA GEL FINAL WT.:	791.60	**grams**
SILICA GEL INITIAL WT.:	779.20	**grams**
DIFFERENCE:	12.40	
FINAL IMPINGER WATER:	4949.10	**mls.**
INITIAL IMPINGER WATER:	4698.50	**mls.**
DIFFERENCE:	250.60	
TOTAL WATER GAIN:	263.00	

ITEM	MERCURY (UG)		= NET WT. (G)
FILTER:	0.014		0.000000014
PROBE WASH:	0.000		0.000000000
		Particle-bound Total:	0.000000014
KCl:	2.385		0.000002385
		Oxidized Total:	0.000002385
HNO_3/H_2O_2:	0.020		0.000000020
$KMNO_4$:	17.255		0.000017255
		Elemental Total:	0.000017275

Orsat Analysis	1	2	3	Average
Carbon Dioxide:	12.50	12.50	12.50	12.50
Oxygen:	6.10	6.10	6.10	6.10

ONTARIO HYDRO METHOD DATA ENTRY FORM

Field Data/Calculated Data

Company:	Grand River Dam Authority
Date:	9/22/99
Test Run:	1
Stack or Duct No.:	Unit 2 Stack
Start Time:	9:30
Stop Time:	11:48

Pb:	29.51	Inches Hg
Static	-0.50	Inches H2O
Ps:	29.47	Inches Hg Abs.
Vlc:	263	ml + grams
Mn:	0.0000	gm
Test Time:	120	minutes
% O2:	6.10	%
% CO2:	12.50	%
% N2:	81.40	%
Delta H:	1.07	Inches H20
Cp:	0.835	Dimensionless - pitot
Tm:	74.69	°F
Sqrt P:	1.194	Inches H20
Ts:	183.21	°F
Vm:	67.257	Cubic Feet
Dn:	0.180	Inches - nozzle
As:	380.13	Sq. Feet
Yd:	1.004	Mcf
CF:	N/A	Process tons/hr
Heat Input:	N/A	MM BTU/hr
Fd:	N/A	dscf/10^6 Btu
Fc:	N/A	scf/10^6 Btu

Vmstd:	65.943	cubic feet (dry)
Vwstd:	12.387	cubic feet (wet)
Bwo:	0.158	
Md:	30.244	lb/lb-mole (dry)
Ms:	28.308	lb/lb-mole (wet)
Excess Air (%)	39.637	
Vs:	74.857	fps
ACFM:	1707338.	
DSCFM:	1162265.	
WSCFM:	1380596	
%I:	101.8	isokinetic variance
GR/ACF:	---	
GR/DSCF:	---	
lbs/hr	---	
lbs/ton prod.:	N/A	
lbs/MM BTU:	N/A	Heat Input
lbs/MM BTU:	N/A	O2 Basis
lbs/MM BTU:	N/A	CO2 Basis

ONTARIO HYDRO METHOD TEST SUPPORT DATA

PROJECT NO.:	93803	**TEST RUN NO.:**	2	**TEST DATE:**	9/22/99

CUSTOMER:	Grand River Dam Authority	**BAROMETRIC PRESSURE (Pb)**	29.51 **in. Hg.**
PLANT:	Chouteau, Oklahoma	**STATIC PRESSURE**	-0.5 **in. H2O**
TEST LOC.:	Unit 2 Stack	**FLUE PRESSURE (Ps)**	29.47 **in. Hg. abs.**
CLIENT:	Grand River Dam Authority	**PROBE LENGTH:**	8 **ft.**
OPERATOR:	J. Geiger	**PROBE LINER MATERIAL:**	Glass
CONTROL BOX:	E-42	**NOZZLE IDENTIFICATION NO.:**	N/A
METER NO.:	E-42	**CALIBRATED NOZZLE DIAMETER:**	0.180 **in.**
METER CALIBRATION FACTOR:	1.004	**LEAK CHECK PRE:**	0.015 **POST:** 0.008 @ 15 in. Hg.
PITOT ID NO.:	352A	**DUCT SHAPE:**	Circular DIA. 22 Feet Rectangular Feet Feet
PITOT TUBE COEFFICIENT:	0.835	**DUCT AREA:**	380.13239 **sq. ft.**
PORT LENGTH:	11 in.	**TEST LENGTH:**	120 **min.**
PORT SIZE:	4 in.	**MINUTES PER POINT:**	10
PORT TYPE:	Nipple	**TOTAL NUMBER OF TRAVERSE POINTS:**	12

ONTARIO HYDRO METHOD TRAVERSE DATA

Company: Grand River Dam Authority **Date:** 9/22/99 **Test Run:** 2

Location: Unit 2 Stack

Point	Δp	Sq. Root Δp	Time	Volume cubic feet	ΔH	Stack Temp °F	Meter Inlet °F	Meter Outlet °F	Vacuum in. Hg	
1-1	1.50	1.225	12:45	104.91	1.12	183	72	72	3	2.872
1-1	1.60	1.265	12:50	107.78	1.19	184	74	72	4	3.007
1-2	1.50	1.225	12:55	110.78	1.12	184	76	72	4	2.871
1-2	1.50	1.225	13:00	113.66	1.12	183	78	73	3	2.887
1-3	1.30	1.140	13:05	116.54	0.97	183	79	73	3	2.647
1-3	1.40	1.183	13:10	119.19	1.05	183	79	73	3	2.793
			13:15	121.98						0.000
2-1	1.50	1.225	13:20	121.98	1.12	184	75	73	3	2.975
2-1	1.50	1.225	13:25	124.96	1.12	184	77	73	3	2.822
2-2	1.50	1.225	13:30	127.78	1.12	183	82	73	3	3.042
2-2	1.70	1.304	13:35	130.82	1.27	184	79	72	4	2.894
2-3	1.50	1.225	13:40	133.72	1.12	182	78	72	3	2.920
2-3	1.40	1.183	13:45	136.64	1.05	184	79	71	3	2.568
			13:50	139.20						0.000
3-1	1.60	1.265	13:55	139.20	1.20	185	78	72	3	2.992
3-1	1.50	1.225	14:00	142.20	1.12	185	79	72	3	2.936
3-2	1.30	1.140	14:05	145.13	0.97	184	80	74	4	2.428
3-2	1.40	1.183	14:10	147.56	1.05	184	82	73	4	2.844
3-3	1.30	1.140	14:15	150.40	0.97	183	78	71	4	2.897
3-3	1.30	1.140	14:20	153.30	0.97	183	77	72	4	2.776
			14:20	156.08						0.000
4-1	1.50	1.225	14:30	156.08	1.12	183	83	73	5	2.929
4-1	1.60	1.265	14:35	159.01	1.20	184	82	74	5	2.917
4-2	1.60	1.265	14:40	161.92	1.20	183	76	71	5	3.081
4-2	1.80	1.342	14:45	165.00	1.35	184	77	72	5	3.046
4-3	1.30	1.140	14:50	168.05	0.97	183	78	72	5	2.706
4-3	1.40	1.183	14:55	170.76	1.05	184	78	72	5	2.937
			15:00	173.69						0.000
										0.000
										0.000
										0.000
										0.000
										0.000
										0.000
										0.000
										0.000
										0.000
										0.000
		1.215		68.787	1.11	184	78	72		#####
							75.27			

MOISTURE, DILUENT AND MERCURY DATA

Company Grand River Dam Authority **Date:** 9/22/99 **Test Run:** 2

Location: Unit 2 Stack

SILICA GEL FINAL WT.:	719.50	**grams**
SILICA GEL INITIAL WT.:	705.10	**grams**
DIFFERENCE:	14.40	
FINAL IMPINGER WATER:	4832.60	**mls.**
INITIAL IMPINGER WATER:	4579.20	**mls.**
DIFFERENCE:	253.40	
TOTAL WATER GAIN:	267.80	

ITEM	MERCURY (UG)		= NET WT. (G)
FILTER:	0.031		0.000000031
PROBE WASH:	0.000		0.000000000
		Particle-bound Total:	0.000000031
KCl:	1.975		0.000001975
		Oxidized Total:	0.000001975
HNO_3/H_2O_2:	0.150		0.000000150
$KMNO_4$:	17.055		0.000017055
		Elemental Total:	0.000017205

Orsat Analysis	1	2	3	Average
Carbon Dioxide:	12.70	12.70	12.70	12.70
Oxygen:	6.40	6.40	6.40	6.40

ONTARIO HYDRO METHOD DATA ENTRY FORM

Field Data/Calculated Data

Company:	**Grand River Dam Authority**
Date:	9/22/99
Test Run:	2
Stack or Duct No.:	Unit 2 Stack
Start Time:	12:45
Stop Time:	15:00

Pb:	29.51	Inches Hg
Static	-0.50	Inches H2O
Ps:	29.47	Inches Hg Abs.
Vlc:	268	ml + grams
Mn:	0.0000	gm
Test Time:	120	minutes
% O2:	6.40	%
% CO2:	12.70	%
% N2:	80.90	%
Delta H:	1.11	Inches H20
Cp:	0.835	Dimensionless - pitot
Tm:	75.27	°F
Sqrt P:	1.215	Inches H20
Ts:	183.58	°F
Vm:	68.787	Cubic Feet
Dn:	0.180	Inches - nozzle
As:	380.13	Sq. Feet
Yd:	1.004	Mcf
CF:	N/A	Process tons/hr
Heat Input:	N/A	MM BTU/hr
Fd:	N/A	dscf/10^6 Btu
Fc:	N/A	scf/10^6 Btu

Vmstd:	67.375	cubic feet (dry)
Vwstd:	12.613	cubic feet (wet)
Bwo:	0.158	
Md:	30.288	lb/lb-mole (dry)
Ms:	28.350	lb/lb-mole (wet)
Excess Air (%)	42.788	
Vs:	76.122	fps
ACFM:	1736190.	
DSCFM:	1181853.	
WSCFM:	1403108	
%I:	102.3	isokinetic variance
GR/ACF:	---	
GR/DSCF:	---	
lbs/hr	---	
lbs/ton prod.:	N/A	
lbs/MM BTU:	N/A	Heat Input
lbs/MM BTU:	N/A	O2 Basis
lbs/MM BTU:	N/A	CO2 Basis

ONTARIO HYDRO METHOD TEST SUPPORT DATA

PROJECT NO.:	93803	**TEST RUN NO.:**	3	**TEST DATE:**	09/22/1999

CUSTOMER:	Grand River Dam Authority	**BAROMETRIC PRESSURE (Pb)**	29.51 **in. Hg.**
PLANT:	Chouteau, Oklahoma	**STATIC PRESSURE**	-0.5 **in. H2O**
TEST LOC.:	Unit 2 Stack	**FLUE PRESSURE (Ps)**	29.47 **in. Hg. abs.**
CLIENT:	Grand River Dam Authority	**PROBE LENGTH:**	8 **ft.**
OPERATOR:	J. Geiger	**PROBE LINER MATERIAL:**	Glass
CONTROL BOX:	E-42	**NOZZLE IDENTIFICATION NO.:**	N/A
METER NO.:	E-42	**CALIBRATED NOZZLE DIAMETER:**	0.180 **in.**
METER CALIBRATION FACTOR:	1.004	**LEAK CHECK PRE:**	0.017 **POST:** 0.007 @ 14 in. Hg.
PITOT ID NO.:	352A	**DUCT SHAPE:**	Circular DIA. 22 Feet Rectangular Feet Feet
PITOT TUBE COEFFICIENT:	0.835	**DUCT AREA:**	380.13239 **sq. ft.**
PORT LENGTH:	11 in.	**TEST LENGTH:**	120 **min.**
PORT SIZE:	4 in.	**MINUTES PER POINT:**	10
PORT TYPE:	Nipple	**TOTAL NUMBER OF TRAVERSE POINTS:**	12

Mostardi Platt

ONTARIO HYDRO METHOD TRAVERSE DATA

Company: Grand River Dam Authority **Date:** 09/22/1999 **Test Run:** 3

Location: Unit 2 Stack

Point	Δp	Sq. Root Δp	Time	Volume cubic feet	ΔH	Stack Temp °F	Meter Inlet °F	Meter Outlet °F	Vacuum in. Hg	
1-1	1.50	1.225	16:15	173.82	1.12	184	76	72	3	2.894
1-1	1.50	1.225	16:20	176.71	1.12	184	76	71	3	2.881
1-2	1.60	1.265	16:25	179.59	1.20	185	77	71	3	3.028
1-2	1.40	1.183	16:30	182.62	1.05	183	78	71	3	2.810
1-3	1.30	1.140	16:35	185.43	0.97	183	78	71	3	2.686
1-3	1.30	1.140	16:40	188.12	0.97	184	79	72	3	2.721
			16:45	190.84						0.000
2-1	1.40	1.183	16:50	190.84	1.05	184	79	71	3	2.793
2-1	1.50	1.225	16:55	193.63	1.12	184	79	73	4	2.972
2-2	1.50	1.225	17:00	196.60	1.12	183	79	73	4	2.760
2-2	1.40	1.183	17:05	199.36	1.05	183	81	74	3	2.844
2-3	1.40	1.183	17:10	202.21	1.05	183	82	74	3	2.781
2-3	1.20	1.095	17:15	204.99	0.90	183	79	74	3	2.634
			17:20	207.62						0.000
3-1	1.60	1.265	17:25	207.62	1.20	183	79	72	4	3.019
3-1	1.50	1.225	17:30	210.64	1.12	184	79	71	3	2.870
3-2	1.60	1.265	17:35	213.51	1.20	184	78	72	4	3.010
3-2	1.40	1.183	17:40	216.52	1.05	184	79	71	3	2.714
3-3	1.30	1.140	17:45	219.24	0.97	184	79	70	3	2.709
3-3	1.40	1.183	17:50	221.94	1.05	183	78	70	3	2.912
			17:55	224.86						0.000
4-1	1.40	1.183	18:00	224.86	1.05	183	77	73	3	2.957
4-1	1.50	1.225	18:05	227.81	1.12	184	79	72	3	2.722
4-2	1.50	1.225	18:10	230.54	1.12	182	81	72	3	2.884
4-2	1.50	1.225	18:15	233.42	1.12	183	79	71	3	2.909
4-3	1.20	1.095	18:20	236.33	0.90	183	79	71	3	2.552
4-3	1.20	1.095	18:25	238.88	0.90	184	78	70	3	2.572
			18:30	241.45						0.000
										0.000
										0.000
										0.000
										0.000
										0.000
										0.000
										0.000
										0.000
										0.000
										0.000
		1.191		67.634	1.06	184	79	72		#####
							75.21			

MOISTURE, DILUENT AND MERCURY DATA

Company Grand River Dam Authority **Date:** 09/22/1999 **Test Run:** 3

Location: #REF!

SILICA GEL FINAL WT.:	791.40	**grams**
SILICA GEL INITIAL WT.:	775.20	**grams**
DIFFERENCE:	16.20	
FINAL IMPINGER WATER:	4985.70	**mls.**
INITIAL IMPINGER WATER:	4740.40	**mls.**
DIFFERENCE:	245.30	
TOTAL WATER GAIN:	261.50	

ITEM	MERCURY (UG)		= NET WT. (G)
FILTER:	0.012		0.000000012
PROBE WASH:	0.000		0.000000000
		Particle-bound Total:	0.000000012
KCl:	0.531		0.000000531
		Oxidized Total:	0.000000531
HNO_3/H_2O_2:	0.020		0.000000020
$KMNO_4$:	16.555		0.000016555
		Elemental Total:	0.000016575

Orsat Analysis	1	2	3	Average
Carbon Dioxide:	12.70	12.70	12.70	12.70
Oxygen:	6.30	6.30	6.30	6.30

ONTARIO HYDRO METHOD DATA ENTRY FORM

Field Data/Calculated Data

Company:	Grand River Dam Authority
Date:	09/22/1999
Test Run:	3
Stack or Duct No.:	Unit 2 Stack
Start Time:	16:15
Stop Time:	18:30

Pb:	29.51	Inches Hg
Static	-0.50	Inches H2O
Ps:	29.47	Inches Hg Abs.
Vlc:	262	ml + grams
Mn:	0.0000	gm
Test Time:	120	minutes
% O2:	6.30	%
% CO2:	12.70	%
% N2:	81.00	%
Delta H:	1.06	Inches H20
Cp:	0.835	Dimensionless - pitot
Tm:	75.21	°F
Sqrt P:	1.191	Inches H20
Ts:	183.50	°F
Vm:	67.634	Cubic Feet
Dn:	0.180	Inches - nozzle
As:	380.13	Sq. Feet
Yd:	1.004	Mcf
CF:	N/A	Process tons/hr
Heat Input:	N/A	MM BTU/hr
Fd:	N/A	dscf/10^6 Btu
Fc:	N/A	scf/10^6 Btu

Vmstd:	66.247	cubic feet (dry)
Vwstd:	12.317	cubic feet (wet)
Bwo:	0.157	
Md:	30.284	lb/lb-mole (dry)
Ms:	28.358	lb/lb-mole (wet)
Excess Air (%)	41.766	
Vs:	74.594	fps
ACFM:	1701341.	
DSCFM:	1159540.	
WSCFM:	1375123	
%I:	102.5	isokinetic variance
GR/ACF:	---	
GR/DSCF:	---	
lbs/hr	---	
lbs/ton prod.:	N/A	
lbs/MM BTU:	N/A	Heat Input
lbs/MM BTU:	N/A	O2 Basis
lbs/MM BTU:	N/A	CO2 Basis

Project Summary-Samples Received Report

Project	*Client*	*Unit*
93803	GRAND RIVER DAM AUTHORITY	CHOUTEAU, OK

Project	*Sample*	*Sample Point*	*Date Received*	*Analyte Detail*
93803	001	INL HNO3 RNS T1	9/24/1999	Mercury
93803	002	INL HNO3 RNS T2	9/24/1999	Mercury
93803	003	INL HNO3 RNS T3	9/24/1999	Mercury
93803	004	INL KCL IMP T1	9/24/1999	Mercury
93803	005	INL KCL IMP T2	9/24/1999	Mercury
93803	006	INL KCL IMP T3	9/24/1999	Mercury
93803	007	IN HNO3/H2O2 T1	9/24/1999	Mercury
93803	008	IN HNO3/H2O2 T2	9/24/1999	Mercury
93803	009	IN HNO3/H2O2 T3	9/24/1999	Mercury
93803	010	INL KMNO4 IM T1	9/24/1999	Mercury
93803	011	INL KMNO4 IM T2	9/24/1999	Mercury
93803	012	INL KMNO4 IM T3	9/24/1999	Mercury
93803	013	OUT HNO3 RNS T1	9/24/1999	Mercury
93803	014	OUT HNO3 RNS T2	9/24/1999	Mercury
93803	015	OUT HNO3 RNS T3	9/24/1999	Mercury
93803	016	OUT KCL IMP T1	9/24/1999	Mercury
93803	017	OUT KCL IMP T2	9/24/1999	Mercury
93803	018	OUT KCL IMP T3	9/24/1999	Mercury
93803	019	OUT HNO3/H2O2-1	9/24/1999	Mercury
93803	020	OUT HNO3/H2O2-2	9/24/1999	Mercury
93803	021	OUT HNO3/H2O2-3	9/24/1999	Mercury
93803	022	OUT KMNO4 IM T1	9/24/1999	Mercury
93803	023	OUT KMNO4 IM T2	9/24/1999	Mercury
93803	024	OUT KMNO4 IM T3	9/24/1999	Mercury
93803	025	FLD BL INL KCL	9/24/1999	Mercury
93803	026	F/B INHNO3/H2O2	9/24/1999	Mercury

Project	*Sample*	*Sample Point*	*Date Received*	*Analyte Detail*
93803	027	FLD BL IN KMNO4	9/24/1999	Mercury
93803	028	FLD BL OUT KCL	9/24/1999	Mercury
93803	029	F/B OTHNO3/H202	9/24/1999	Mercury
93803	030	F/B OUTL KMNO4	9/24/1999	Mercury
93803	031	BLANK: QRTZ FLT	9/24/1999	Mercury
93803	032	BLANK: QRTZ FLT	9/24/1999	Mercury
93803	033	BLANK: QRTZ FLT	9/24/1999	Mercury
93803	034	BLANK:H/PUR FLT	9/24/1999	Mercury
93803	035	BLANK:H/PUR FLT	9/24/1999	Mercury
93803	036	BLANK:H/PUR FLT	9/24/1999	Mercury
93803	037	REAG BLNK HNO3	9/24/1999	Mercury
93803	038	REAG BLNK KCL	9/24/1999	Mercury
93803	039	R/BL HNO3/H2O2	9/24/1999	Mercury
93803	040	REAG BL KMNO4	9/24/1999	Mercury
93803	041	REAG BL KMNO4	9/24/1999	Mercury
93803	042	R/BL HYDROXYLAM	9/24/1999	Mercury
93803	043	COAL OK T1	9/24/1999	Chloride
93803	043	COAL OK T1	9/24/1999	Mercury
93803	043	COAL OK T1	9/24/1999	Ultimate/Proximate on Coal
93803	044	COAL WY T1	9/24/1999	Chloride
93803	044	COAL WY T1	9/24/1999	Mercury
93803	044	COAL WY T1	9/24/1999	Ultimate/Proximate on Coal
93803	045	COAL COMP T1	9/24/1999	Chloride
93803	045	COAL COMP T1	9/24/1999	Mercury
93803	045	COAL COMP T1	9/24/1999	Ultimate/Proximate on Coal
93803	046	COAL OK T2	9/24/1999	Chloride
93803	046	COAL OK T2	9/24/1999	Ultimate/Proximate on Coal
93803	046	COAL OK T2	9/24/1999	Mercury
93803	047	COAL WY T2	9/24/1999	Chloride
93803	047	COAL WY T2	9/24/1999	Mercury

Project	*Sample*	*Sample Point*	*Date Received*	*Analyte Detail*
93803	047	COAL WY T2	9/24/1999	Ultimate/Proximate on Coal
93803	048	COAL COMP T2	9/24/1999	Chloride
93803	048	COAL COMP T2	9/24/1999	Mercury
93803	048	COAL COMP T2	9/24/1999	Ultimate/Proximate on Coal
93803	049	COAL OK T3	9/24/1999	Chloride
93803	049	COAL OK T3	9/24/1999	Mercury
93803	049	COAL OK T3	9/24/1999	Ultimate/Proximate on Coal
93803	050	COAL WY T3	9/24/1999	Chloride
93803	050	COAL WY T3	9/24/1999	Mercury
93803	050	COAL WY T3	9/24/1999	Ultimate/Proximate on Coal
93803	051	COAL COMP T3	9/24/1999	Chloride
93803	051	COAL COMP T3	9/24/1999	Mercury
93803	051	COAL COMP T3	9/24/1999	Ultimate/Proximate on Coal
93803	052	ASH SAMPLE	9/24/1999	Hold

LABORATORY REPORT

TEI Analytical, Inc.
7177 N. Austin
Niles, IL 60714-4617
847-647-1345

PREPARED FOR:

Frank Jarke
Mostardi-Platt Associates, Inc.
945 Oaklawn Avenue
Elmhurst, IL 60126

Report #: 36501
Report Date: 2/4/00
Sample Received:
10/1/99 12:37

TEI	93803	Type	Total ug	mg/kg	Date	%RSD	Lin.Reg.	Blank	CPI	MS	MSD
36501	001	HNO3	<0.004		01/09/00	2.03	0.99998	NA	101	112	108
36502	002	HNO3	0.009		01/05/00	0.639	0.99998	NA	91.2	104	103
36503	003	HNO3	0.021		01/04/00	0.193	1	NA	93.3	110	109
36504	001Filter	Filt		0.148	10/30/99	0.863	0.99909	0.361	94	126	126
36505	002Filter	Filt		0.307	10/30/99	1.56	0.99909	0.361	94	126	126
36506	003Filter	Filt		0.404	10/30/99	0.31	0.99957	0.361	95.4	102	103
36507	004	KCl	7.56		01/12/00	0.35	0.99999	0.23	90.7	112	110
36508	005	KCl	5.94		12/28/99	0.73	0.99999	0.222	97.1	107	110
36509	006	KCl	10.2		01/03/00	0.357	0.99999	0.492	98.6	93.8	88.6
36510	007	H2O2	0.652		01/05/00	0.924	0.99998	0.105	91.2	104	103
36511	008	H2O2	0.874		01/05/00	1.02	0.99998	0.105	91.2	104	103
36512	009	H2O2	0.257		01/05/00	1.42	0.99998	0.105	91.2	104	103
36513	010	KMnO4	12.7		12/13/99	0.605	1	0.023	93.5	106	99
36514	011	KMnO4	12.2		12/13/99	0.91	1	0.023	93.5	106	99
36515	012	KMnO4	4.12		12/12/99	0.253	1	0.023	93.5	106	99
36516	013	HNO3	<0.004		01/05/00	17.1	0.99998	0.105	91.2	100	101
36517	014	HNO3	<0.004		01/05/00	1/3/00	0.99998	0.105	91.2	100	101
36518	015	HNO3	<0.004		01/05/00	3.41	0.99998	0.105	91.2	100	101
36519	013Filter	Filt		0.021	01/09/00	0.116	0.99998	0.138	101	122	108
36520	014Filter	Filt		0.046	01/09/00	0.105	0.99998	0.138	101	122	108
36521	015Filter	Filt		0.018	01/09/00	1.65	0.99998	0.138	101	122	108
36522	016	KCl	2.39		12/28/99	0.145	1	0.222	97.1	107	110
36523	017	KCl	1.98		12/28/99	0.592	1	0.222	97.1	107	110
36524	018	KCl	0.536		12/28/99	0.676	1	0.222	97.1	107	110
36525	019	H2O2	<0.04		01/10/00	0.782	0.99998	0.135	97.2	103	103
36526	020	H2O2	0.15		10/30/00	6.97	0.99966	<0.03	104	106	106

Gayle E. O'Neill, Ph.D.

This report may not be reproduced except in its entirety.

LABORATORY REPORT

TEI Analytical, Inc.
7177 N. Austin
Niles, IL 60714-4617
847-647-1345

PREPARED FOR:

Frank Jarke
Mostardi-Platt Associates, Inc.
945 Oaklawn Avenue
Elmhurst, IL 60126

Report #: 36501
Report Date: 2/4/00
Sample Received:
10/1/99 12:37

TEI	93803	Type	Total ug	mg/kg	Date	%RSD	Lin.Reg.	Blank	CPI	MS	MSD
36527	021	H2O2	<0.04		01/10/00	3.15	0.99998	0.135	97.2	103	103
36528	022	KMnO4	17.3		12/13/99	0.62	1	0.023	93.5	106	99
36529	023	KMnO4	17.1		12/13/99	0.553	1	0.023	93.5	106	99
36530	024	KMnO4	16.6		12/13/99	0.513	1	0.023	93.5	106	99
36531	025	KCl	1.72		01/04/00	0.972	1	0.103	93.3	110	109
36532	026	H2O2	<0.04		01/10/00	3.33	0.99998	0.135	97.2	103	103
36533	027	KMnO4	0.318		12/12/99	3.29	0.99999	0.062	106	92.3	93.5
36534	028	KCl	4.87		01/04/00	0.051	0.99999	0.103	97.2	110	109
36535	029	H2O2	<0.04		01/10/00	1.94	0.99998	0.135	97.2	103	103
36536	030	KMnO4	0.359		12/12/99	4.29	0.99999	0.062	106	92.3	93.5
36537	031	Filt		0.014	10/30/99	1.87	0.99909	0.361	94	126	126
36538	032	Filt		0.016	10/30/99	0.487	0.99909	0.361	94	126	126
36539	033	Filt		0.02	10/30/99	0.702	0.99909	0.361	94	126	126
36540	034	Filt		<0.008	01/09/00	0.508	0.99998	0.138	101	122	108
36541	035	Filt		<0.008	01/09/00	3.29	0.99998	0.138	101	122	108
36542	036	Filt		<0.008	01/09/00	1.1	0.99998	0.138	101	122	108
36543	037	HNO3	<0.002		01/04/00	0.298	1	NA	97.2	110	109
36544	038	KCl	0.005		01/05/00	5.28	0.99998	NA	91.2	104	103
36545	039	H2O2	0.029		01/12/00	2.85	0.99998	0.084	90.7	112	110
36546	040	KMnO4	0.011		01/10/00	1.87	0.99999	0.089	97.2	103	103
36547	041	KMnO4	0.078		01/10/00	0.045	0.99998	0.089	97.2	103	103
36548	042	NH2OH	<0.003		12/15/99	7.73	0.99999	NA	96.5	116	99.9

Gayle E. O'Neill, Ph.D.

This report may not be reproduced except in its entirety.

LABORATORY REPORT

TEI Analytical, Inc.
7177 N. Austin
Niles, IL 60714-4617
847-647-1345

PREPARED FOR:

Frank Jarke
Mostardi-Platt Associates, Inc.
945 Oaklawn Avenue
Elmhurst, IL 60126

Report #: 36501
Report Date: 2/4/00
Sample Received:
10/1/99 12:37

Mercury (Ontario Hydro Method)

The QAPP called for the analysis of all samples in duplicate with every tenth sample run in triplicate. To simplify the instrument setup, we chose to run all samples, blanks, standards, matrix spikes and matrix spike duplicates in triplicate. The reported %RSD is for the triplicate measurements.

All sample results are reported as total micrograms in the sample received by the laboratory, with the exception of the filter samples. The filter sample results are expressed as mg/kg.

The instrument was calibrated at least daily with a blank and four standards. The Lin.Reg. column in this report represents the linear regression coefficient obtained during the calibration.

The laboratory method blank is reported in ug/l in the Blank column of this report. For samples requiring only addition of Hydroxylamine Hydrochloride, NA is entered in this column. No laboratory method blanks were applicable for these samples.

The CPI column presents the % Recovery of an independent standard (obtained from CPI). The calibration curve was prepared in our laboratory from Mercuric Chloride in accordance with EPA Method 7470.

The MS and MSD columns present the % Recovery of the Matrix Spikes and Matrix Spike Duplicates.

Gayle E. O'Neill, Ph.D.

This report may not be reproduced except in its entirety.

COMMERCIAL TESTING & ENGINEERING CO.

GENERAL OFFICES: 1919 SOUTH HIGHLAND AVE., SUITE 210-B, LOMBARD, ILLINOIS 60148 • TEL: 630-953-9300 FAX: 630-953-9306

SINCE 1908®

SGS Member of the SGS Group (Société Générale de Surveillance)

ADDRESS ALL CORRESPONDENCE TO:
16130 VAN DRUNEN RD.
SOUTH HOLLAND, IL 60473
TEL: (708) 331-2900
FAX: (708) 333-3060

October 15, 1999

MOSTARDI-PLATT ASSOCIATES, INC
945 Oaklawn Avenue
Elmhurst, IL 60126
Attn: Frank Jarke

Sample identification by
Mostardi-Platt Assoc., Inc.

Kind of sample reported to us: Coal

MPA Sample No: 93803-045

Sample taken at: ------

Sample taken by: Mostardi-Platt Assoc., Inc.

Date sampled: September 22, 1999

Date received: September 30, 1999

P.O. No. 22291

Analysis Report No. 71-103687

PROXIMATE ANALYSIS	As Received	Dry Basis
% Moisture	24.16	xxxxx
% Ash	6.15	8.11
% Volatile	30.51	40.23
% Fixed Carbon	39.18	51.66
	100.00	100.00
Btu/lb	9170	12091
% Sulfur	0.54	0.71
MAF Btu		13158

ULTIMATE ANALYSIS	As Received	Dry Basis
% Moisture	24.16	xxxxx
% Carbon	53.21	70.16
% Hydrogen	3.67	4.84
% Nitrogen	0.83	1.10
% Sulfur	0.54	0.71
% Ash	6.15	8.11
% Oxygen(diff)	11.44	15.08
	100.00	100.00
CHLORIDE, ug/g	288	379

METHODS

Moisture: ASTM D 3302; Ash: ASTM D 3174; Volatile: ASTM D 3175; Fixed Carbon: Calculated Value; ASTM D 3172
Btu/lb: ASTM 3286; Sulfur: ASTM D 4239 (Method C); Carbon, Hydrogen & Nitrogen: ASTM D 5373; Chloride: ASTM D 4208

Respectfully submitted,
COMMERCIAL TESTING & ENGINEERING CO.

South Holland Laboratory

MEMBER ACIL

101

COMMERCIAL TESTING & ENGINEERING CO.
GENERAL OFFICES: 1919 SOUTH HIGHLAND AVE., SUITE 210-B, LOMBARD, ILLINOIS 60148 • TEL: 630-953-9300 FAX: 630-953-9306
SINCE 1908®
SGS Member of the SGS Group (Société Générale de Surveillance)

ADDRESS ALL CORRESPONDENCE TO:
16130 VAN DRUNEN RD.
SOUTH HOLLAND, IL 60473
TEL: (708) 331-2900
FAX: (708) 333-3060

October 15, 1999

MOSTARDI-PLATT ASSOCIATES, INC
945 Oaklawn Avenue
Elmhurst, IL 60126
Attn: Frank Jarke

Sample identification by
Mostardi-Platt Assoc., Inc.

Kind of sample reported to us: Coal

MPA Sample No: 93803-045

Sample taken at: ------

Sample taken by: Mostardi-Platt Assoc., Inc.

Date sampled: September 22, 1999

Date received: September 30, 1999

P.O. No. 22291

Analysis Report No. 71-103687

Dry Basis, ug/g

Mercury, Hg 0.10

	Expected	Observed
SARM 1157	0.05	0.05
NIST 1630A	0.11	0.11

METHOD
Mercury: ASTM D 3684

Respectfully submitted,
COMMERCIAL TESTING & ENGINEERING CO.

South Holland Laboratory

MEMBER ACIL

OVER 40 BRANCH LABORATORIES STRATEGICALLY LOCATED IN PRINCIPAL COAL MINING AREAS, TIDEWATER AND GREAT LAKES PORTS, AND RIVER LOADING FACILITIES
Original Watermarked For Your Protection
TERMS AND CONDITIONS ON REVERSE

COMMERCIAL TESTING & ENGINEERING CO.
GENERAL OFFICES: 1919 SOUTH HIGHLAND AVE., SUITE 210-B, LOMBARD, ILLINOIS 60148 • TEL: 630-953-9300 FAX: 630-953-9306
SINCE 1908®
SGS Member of the SGS Group (Société Générale de Surveillance)

ADDRESS ALL CORRESPONDENCE TO:
16130 VAN DRUNEN RD.
SOUTH HOLLAND, IL 60473
TEL: (708) 331-2900
FAX: (708) 333-3060

October 8, 1999

MOSTARDI-PLATT ASSOCIATES, INC
945 Oaklawn Avenue
Elmhurst, IL 60126
Attn: Frank Jarke

Sample identification by
Mostardi-Platt Assoc., Inc.

Kind of sample reported to us Coal

MPA Sample No: 93803-048

Sample taken at ------

Sample taken by Mostardi-Platt Assoc., Inc.

Date sampled September 22, 1999

Date received September 30, 1999

P.O. No. 22291

Analysis Report No. 71-103688

PROXIMATE ANALYSIS

	As Received	Dry Basis
% Moisture	24.90	xxxxx
% Ash	6.04	8.04
% Volatile	30.06	40.02
% Fixed Carbon	39.00	51.94
	100.00	100.00
Btu/lb	9152	12186
% Sulfur	0.55	0.73
MAF Btu		13251

ULTIMATE ANALYSIS

	As Received	Dry Basis
% Moisture	24.90	xxxxx
% Carbon	53.44	71.16
% Hydrogen	3.65	4.86
% Nitrogen	0.86	1.15
% Sulfur	0.55	0.73
% Ash	6.04	8.04
% Oxygen(diff)	10.56	14.06
	100.00	100.00
CHLORIDE, ug/g	290	386

METHODS

Moisture: ASTM D 3302; Ash: ASTM D 3174; Volatile: ASTM D 3175; Fixed Carbon: Calculated Value; ASTM D 3172
Btu/lb: ASTM 3286; Sulfur: ASTM D 4239 (Method C); Carbon, Hydrogen & Nitrogen: ASTM D 5373; Chloride: ASTM D 4208

Respectfully submitted,
COMMERCIAL TESTING & ENGINEERING CO.

South Holland Laboratory

MEMBER ACIL

OVER 40 BRANCH LABORATORIES STRATEGICALLY LOCATED IN PRINCIPAL COAL MINING AREAS, TIDEWATER AND GREAT LAKES PORTS, AND RIVER LOADING FACILITIES
F 35
Original Watermarked For Your Protection
TERMS AND CONDITIONS ON REVERSE

COMMERCIAL TESTING & ENGINEERING CO.
GENERAL OFFICES: 1919 SOUTH HIGHLAND AVE., SUITE 210-B, LOMBARD, ILLINOIS 60148 • TEL: 630-953-9300 FAX: 630-953-9306
SINCE 1908®
SGS Member of the SGS Group (Société Générale de Surveillance)

ADDRESS ALL CORRESPONDENCE TO:
16130 VAN DRUNEN RD.
SOUTH HOLLAND, IL 60473
TEL: (708) 331-2900
FAX: (708) 333-3060

October 8, 1999

MOSTARDI-PLATT ASSOCIATES, INC
945 Oaklawn Avenue
Elmhurst, IL 60126
Attn: Frank Jarke

Sample identification by
Mostardi-Platt Assoc., Inc.

Kind of sample reported to us: Coal

MPA Sample No: 93803-048

Sample taken at: ------

Sample taken by: Mostardi-Platt Assoc., Inc.

Date sampled: September 22, 1999

Date received: September 30, 1999

P.O. No. 22291

Analysis Report No. 71-103688

Dry Basis, ug/g

Mercury, Hg 0.10

	Expected	Observed
SARM 1157	0.05	0.05
NIST 1630A	0.11	0.11

METHOD
Mercury: ASTM D 3684

Respectfully submitted,
COMMERCIAL TESTING & ENGINEERING CO.

South Holland Laboratory

MEMBER ACIL

OVER 40 BRANCH LABORATORIES STRATEGICALLY LOCATED IN PRINCIPAL COAL MINING AREAS, TIDEWATER AND GREAT LAKES PORTS, AND RIVER LOADING FACILITIES
Original Watermarked For Your Protection
TERMS AND CONDITIONS ON REVERSE

COMMERCIAL TESTING & ENGINEERING CO.

GENERAL OFFICES: 1919 SOUTH HIGHLAND AVE., SUITE 210-B, LOMBARD, ILLINOIS 60148 • TEL: 630-953-9300 FAX: 630-953-9306

SINCE 1908®

SGS Member of the SGS Group (Société Générale de Surveillance)

ADDRESS ALL CORRESPONDENCE TO:
16130 VAN DRUNEN RD.
SOUTH HOLLAND, IL 60473
TEL: (708) 331-2900
FAX: (708) 333-3060

October 8, 1999

MOSTARDI-PLATT ASSOCIATES, INC
945 Oaklawn Avenue
Elmhurst, IL 60126
Attn: Frank Jarke

Sample identification by
Mostardi-Platt Assoc., Inc.

Kind of sample reported to us: Coal

MPA Sample No: 93803-051

Sample taken at: ------

Sample taken by: Mostardi-Platt Assoc., Inc.

Date sampled: September 22, 1999

Date received: September 30, 1999

P.O. No. 22291

Analysis Report No. 71-103689

PROXIMATE ANALYSIS

	As Received	Dry Basis
% Moisture	24.25	xxxxx
% Ash	6.41	8.46
% Volatile	30.04	39.66
% Fixed Carbon	39.30	51.88
	100.00	100.00
Btu/lb	9163	12096
% Sulfur	0.67	0.88
MAF Btu		13214

ULTIMATE ANALYSIS

	As Received	Dry Basis
% Moisture	24.25	xxxxx
% Carbon	54.01	71.30
% Hydrogen	3.64	4.81
% Nitrogen	0.86	1.14
% Sulfur	0.67	0.88
% Ash	6.41	8.46
% Oxygen(diff)	10.16	13.41
	100.00	100.00
CHLORIDE, ug/g	327	431

METHODS

Moisture: ASTM D 3302; Ash: ASTM D 3174; Volatile: ASTM D 3175; Fixed Carbon: Calculated Value; ASTM D 3172
Btu/lb: ASTM 3286; Sulfur: ASTM D 4239 (Method C); Carbon, Hydrogen & Nitrogen: ASTM D 5373; Chloride: ASTM D 4208

Respectfully submitted,
COMMERCIAL TESTING & ENGINEERING CO.

South Holland Laboratory

MEMBER ACIL

OVER 40 BRANCH LABORATORIES STRATEGICALLY LOCATED IN PRINCIPAL COAL MINING AREAS, TIDEWATER AND GREAT LAKES PORTS, AND RIVER LOADING FACILITIES

I 65
Original Watermarked For Your Protection

TERMS AND CONDITIONS ON REVERSE

COMMERCIAL TESTING & ENGINEERING CO.
GENERAL OFFICES: 1919 SOUTH HIGHLAND AVE., SUITE 210-B, LOMBARD, ILLINOIS 60148 • TEL: 630-953-9300 FAX: 630-953-9306
SINCE 1908®
SGS Member of the SGS Group (Société Générale de Surveillance)

ADDRESS ALL CORRESPONDENCE TO:
16130 VAN DRUNEN RD.
SOUTH HOLLAND, IL 60473
TEL: (708) 331-2900
FAX: (708) 333-3060

October 8, 1999

MOSTARDI-PLATT ASSOCIATES, INC
945 Oaklawn Avenue
Elmhurst, IL 60126
Attn: Frank Jarke

Sample identification by
Mostardi-Platt Assoc., Inc.

Kind of sample reported to us: Coal

MPA Sample No: 93803-051

Sample taken at: ------

Sample taken by: Mostardi-Platt Assoc., Inc.

Date sampled: September 22, 1999

Date received: September 30, 1999

P.O. No. 22291

Analysis Report No. 71-103689

Dry Basis, ug/g

Mercury, Hg 0.10

	Expected	Observed
SARM 1157	0.05	0.05
NIST 1630A	0.11	0.11

METHOD
Mercury: ASTM D 3684

Respectfully submitted,
COMMERCIAL TESTING & ENGINEERING CO.

South Holland Laboratory

MEMBER ACIL

OVER 40 BRANCH LABORATORIES STRATEGICALLY LOCATED IN PRINCIPAL COAL MINING AREAS, TIDEWATER AND GREAT LAKES PORTS, AND RIVER LOADING FACILITIES
TERMS AND CONDITIONS ON REVERSE
Original Watermarked For Your Protection

Mostardi Platt

Mostardi-Platt Associates, Inc.
A Full-Service
Environmental Consulting
Company

945 Oaklawn Avenue
Elmhurst, Illinois 60126-1012
Phone 630-993-9000
Facsimile 630-993-9017