ROY F. WESTON, INC.

WESTON®

MANAGERS DESIGNERS CONSULTANTS

Roy F. Weston, Inc.
1400 Weston Way
P.O. Box 2653
West Chester, PA 19380
610-701-3000 • Fax 610-701-3186
www.rfweston.com

30 May 2000

Mr. William Grimley
U.S. Environmental Protection Agency
Emissions Measurement Center
4930 Old Page Road
Room No. E-108
Durham, NC 27709

Re: Electric Utility Steam Generating Unit
Mercury Test Program
Minnesota Power
Boswell Energy Center

Dear Mr. Grimley:

Enclosed are two bound copies and one unbound copy of the Information Collection Request (ICR) test report for the mercury test program performed at the Minnesota Power Boswell Energy Center.

The test program was performed during the period of 20 through 28 March 2000.

Please contact me at (610) 701-7201 or Tim Hagley of Minnesota Power at (218) 722-5642 ext. 3423 should you have any questions or require additional information.

Sincerely,

ROY F. WESOTN, INC.

Jeffrey D. O'Neill
Principal Technical Manager

cc: Tim Hagley – Minnesota Power
Joe Muller – Minnesota Power
Scott Renninger – DOE
Tom Brown – DOE
Dennis Laurel – EERC
Matt Devito – CONSOL

CONTRACT NO. DE-AC-22-93PC93255
WESTON PROJECT NO. 20009.001.006.1100
EMISSIONS TEST REPORT
MINNESOTA POWER COMPANY
BOSWELL ENERGY CENTER
COHASSET, MINNESOTA

MAY 2000

DOE PROJECT:
ASSESSMENT OF SPECIATED MERCURY EMISSIONS FROM THREE COAL FIRED BOILERS

Prepared for:

UNITED STATES DEPARTMENT OF ENERGY
3610 Collins Ferry Road
Morgantown, West Virginia 26507

DOE Project Manager –
Scott Renninger

And

MINNESOTA POWER COMPANY
30 West Superior Street
Duluth, Minnesota 55803

Corporate Environmental Manager -
Tim Hagley

Prepared by:

ROY F. WESTON, INC.
1400 Weston Way
P.O. Box 2653
West Chester, Pennsylvania 19380
(610) 701-3000

Program Manager – Jeffrey O'Neill

TABLE OF CONTENTS

TABLE OF CONTENTS (CONTINUED)

Section **Page**

TABLE OF CONTENTS (CONTINUED)

Section **Page**

LIST OF FIGURES

Title **Page**

LIST OF FIGURES (CONTINUED)

Title **Page**

LIST OF TABLES

Title **Page**

LIST OF TABLES (CONTINUED)

Title **Page**

EXECUTIVE SUMMARY

This test report presents the results of the speciated mercury test program performed on Units 2, 3 and 4 at the Minnesota Power Company's (MP) Boswell Energy Center located in Cohasset, Minnesota.

The test program was sponsored by MP and the U.S. Department of Energy (DOE). The work was completed by Roy F. Weston, Inc. (WESTON®), the Energy & Environmental Research Center (EERC), and CONSOL, R&D (CONSOL). The test program was performed during the period of 20 through 28 March 2000.

The test was performed to satisfy the U.S. Environmental Protection Agency (EPA), Office of Air Quality Planning Standards (OAQPS), Information Collection Request (ICR) requirements. Additional testing and analysis (not required as part of the ICR) was performed during this test program. This additional data was collected to further validate the ICR measurements, evaluate mercury continuous emission monitoring systems (CEMS) and obtain additional data to support the Lake Superior region mercury study.

During the test program mercury emissions testing using the Ontario Hydro method were performed on the inlet and outlet of the baghouse serving Unit 2, the wet particulate scrubber serving Unit 3 and the sulfur dioxide (SO_2) flue gas desulfurization (FGD) scrubber control system serving Unit 4. Representative samples of the coal, baghouse ash and scrubber liquid streams were sampled in conjunction with the emissions testing. Mercury CEMS measured mercury concentrations at the outlets of Units 2, 3 and 4.

Tables ES-1, ES-2 and ES-3 present a summary of the average speciated mercury concentrations and mass rate results for the Units 2, 3 and 4 inlet and outlet test locations. In addition, the average percent of particulate bound, oxidized, and elemental mercury in comparison to the total mercury are provided. Also presented are the measured mercury removal efficiencies and calculated mercury material balance for the tests performed on Units 2, 3 and 4. Detailed discussions and presentations of all test data and test results are provided in Section 3 of this report.

TABLE ES-1
SUMMARY OF MERCURY SPECIATION TEST RESULTS
UNIT NO. 2

PARAMETERS	Unit 2 Inlet		Unit 2 Outlet	
	Average of Test Runs	Average % of Total	Average of Test Runs	Average % of Total
PROCESS DATA:				
Unit Load, MW	56.6	--	56.6	--
Coal feed rate, lb/hr.	64,680		64,680	
Coal Btu content, Btu/lb.(as received)	8,905		8,905	
Heat Input, 10^6 Btu/hr (F-Factor)	592		592	
PARTICULATE BOUND MERCURY EMISSIONS:				
Conc., ug/m^3	1.51	35.1	0.031	1.9
Conc., ug/Nm^3	1.62		0.033	
Emission rate, lbs/10^{12} Btu.	1.40		0.028	
Emission rate, lbs/hr.	8.39E-04		1.71E-05	
OXIDIZED MERCURY EMISSIONS:				
Conc., ug/m^3	1.15	27.3	0.57	76.0
Conc., ug/Nm^3	1.23		0.62	
Emission rate, lbs/10^{12} Btu.	1.07		0.52	
Emission rate, lbs/hr.	6.36E-04		3.13E-04	
ELEMENTAL MERCURY EMISSIONS:				
Conc., ug/m^3	1.51	37.6	0.13	22.1
Conc., ug/Nm^3	1.61		0.14	
Emission rate, lbs/10^{12} Btu.	1.43		0.12	
Emission rate, lbs/hr.	8.38E-04		6.86E-05	
TOTAL MERCURY EMISSIONS:				
Conc., ug/m^3	4.16	--	0.72	--
Conc., ug/Nm^3	4.47		0.77	
Emission rate, lbs/10^{12} Btu.	3.90		0.65	
Emission rate, lbs/hr.	2.31E-03		3.93E-04	
TOTAL MERCURY REMOVAL EFFICIENCY:	--	--	86%	--
MERCURY MATERIAL BALANCE (1):	--	--	73%	--

(1) Based on total mercury in coal, compared to mercury measured in baghouse ash and at baghouse outlet

TABLE ES-2
SUMMARY OF MERCURY SPECIATION TEST RESULTS
UNIT NO. 3

PARAMETERS	Unit 3 Inlet		Unit 3 Outlet	
	Average of Test Runs	Average % of Total	Average of Test Runs	Average % of Total
PROCESS DATA:				
Unit Load, MW	335.0	--	335.0	--
Coal feed rate, lb/hr.	370,620		370,620	
Coal Btu content, Btu/lb.(as received)	8,735		8,735	
Heat Input, 10^6 Btu/hr (F-Factor)	4,164.3		4,164.3	
PARTICULATE BOUND MERCURY EMISSIONS:				
Conc., ug/m^3	0.03	0.4	0.0017	0.02
Conc., ug/Nm^3	0.03		0.002	
Emission rate, lbs/10^{12} Btu.	0.03		0.001	
Emission rate, lbs/hr.	1.06E-04		6.07E-06	
OXIDIZED MERCURY EMISSIONS:				
Conc., ug/m^3	0.34	6.5	0.0455	1.0
Conc., ug/Nm^3	0.37		0.05	
Emission rate, lbs/10^{12} Btu.	0.28		0.04	
Emission rate, lbs/hr.	1.16E-03		1.66E-04	
ELEMENTAL MERCURY EMISSIONS:				
Conc., ug/m^3	4.98	93.1	4.53	99.0
Conc., ug/Nm^3	5.34		4.86	
Emission rate, lbs/10^{12} Btu.	4.09		3.96	
Emission rate, lbs/hr.	1.70E-02		1.65E-02	
TOTAL MERCURY EMISSIONS:				
Conc., ug/m^3	5.34	--	4.58	--
Conc., ug/Nm^3	5.73		4.91	
Emission rate, lbs/10^{12} Btu.	4.38		4.00	
Emission rate, lbs/hr.	1.83E-02		1.67E-02	
TOTAL MERCURY REMOVAL EFFICIENCY:	--	--	16%	--
MERCURY MATERIAL BALANCE (1):	--	--	101.2%	--

(1) Based on total mercury in coal, compared to mercury measured in scrubber ash and at scrubber outlet.

TABLE ES-3
SUMMARY OF MERCURY SPECIATION TEST RESULTS
UNITS NO. 4

PARAMETERS	Unit 4 Inlet		Unit 4 Outlet	
	Average of Test Runs	Average % of Total	Average of Test Runs	Average % of Total
PROCESS DATA:				
Unit Load, MW	540.0	--	540.0	--
Coal feed rate, lb/hr.	589,347		589,347	
Coal Btu content, Btu/lb.(as received)	8,919		8,919	
Heat Input, 10^6 Btu/hr (F-Factor)	5,783.3		5,783.3	
PARTICULATE BOUND MERCURY EMISSIONS:				
Conc., ug/m^3	1.71	39.2	0.141	2.6
Conc., ug/Nm^3	1.83		0.151	
Emission rate, lbs/10^{12} Btu.	1.36		0.118	
Emission rate, lbs/hr.	7.76E-03		6.73E-04	
OXIDIZED MERCURY EMISSIONS:				
Conc., ug/m^3	0.57	12.5	0.320	5.9
Conc., ug/Nm^3	0.61		0.34	
Emission rate, lbs/10^{12} Btu.	0.45		0.27	
Emission rate, lbs/hr.	2.60E-03		1.53E-03	
ELEMENTAL MERCURY EMISSIONS:				
Conc., ug/m^3	2.21	48.3	4.844	91.5
Conc., ug/Nm^3	2.37		5.20	
Emission rate, lbs/10^{12} Btu.	1.76		4.02	
Emission rate, lbs/hr.	1.03E-02		2.32E-02	
TOTAL MERCURY EMISSIONS:				
Conc., ug/m^3	4.48	--	5.304	--
Conc., ug/Nm^3	4.81		5.69	
Emission rate, lbs/10^{12} Btu.	3.56		4.40	
Emission rate, lbs/hr.	2.06E-02		2.54E-02	
TOTAL MERCURY REMOVAL EFFICIENCY:	--	--	ND(2)	--
MERCURY MATERIAL BALANCE (1):	--	--	93.9%	--

(1) Based on total mercury in coal, compared to mercury measured in FGD slurry and at FGD outlet.
(2) Removal Efficiency not determined.

1. INTRODUCTION

1.1 SUMMARY OF THE TEST PROGRAM

The U.S. Environmental Protection Agency (EPA), Office of Air Quality Planning and Standards (OAQPS) has undertaken a program to acquire information related to mercury emissions from electric utility steam generating units. As part of this Information Collection Request (ICR), EPA has selected certain utilities for emissions testing to characterize speciated mercury emissions and the effectiveness of available control measures on such emissions. In addition, the U.S. Department of Energy (DOE), EPA, and the Electric Power Research Institute (EPRI) have collectively undertaken a study to determine the fate of mercury in the Lake Superior region. This test program was designed to satisfy the requirements of the ICR and obtain additional data to support the Lake Superior region mercury study.

Minnesota Power Company's (MP) Boswell Energy Center located in Cohasset, Minnesota, was selected as one of the study sites. Mercury speciation sampling was performed at the Boswell Energy Center using the Ontario Hydro method. The work was completed by Roy F. Weston, Inc., (WESTON), the Energy & Environmental Research Center (EERC), and CONSOL, R&D (CONSOL). The mercury speciation sampling activities were performed by WESTON. The EERC completed the mercury analysis and used mercury continuous emission monitoring systems (CEMS) to provide continuous mercury measurements. CONSOL was responsible for collection and analysis of the coal, ash, and scrubber liquid samples.

The test program was performed during the period of March 20 through 28, 2000.

This test report presents the test data and test results of the mercury speciation sampling program performed at the Boswell Energy Center. This report contains all test results and discussions for the speciated mercury testing performed on Units 2, 3 and 4. Appendices of the detailed test data and test results, raw test data, process data, laboratory reports, equipment calibration records and sample calculations are also provided.

Per the requirements of the ICR and to satisfy the specific DOE contract requirements the report format followed EPA's Emissions Measurement Center (EMC) guideline document (GD-043) titled, Preparation and Review of Emission Test Reports.

1.2 TEST PROGRAM OBJECTIVES

During the test program mercury emissions testing using the Ontario Hydro method were performed on the inlet and outlet of the baghouse serving Unit 2, the wet particulate scrubber serving Unit 3 and the sulfur dioxide (SO_2) flue gas desulfurization (FGD) scrubber control system serving Unit 4. Mercury CEMS measured mercury concentrations at the outlets of Units 2, 3, and 4. Representative samples of the coal, ash, and scrubber liquid streams were sampled in conjunction with the emissions testing.

The specific objectives of this test program were as follows:

- Characterize the emissions of particulate-bound, elemental and oxidized mercury from the three coal fired boilers.
- Simultaneously measure concentrations and mass rates of speciated mercury at the inlet and outlet of the control device on each of the three coal fired boilers.
- Obtain and analyze representative samples of the coal, baghouse ash and scrubber liquid streams for the purpose of determining mercury levels and to establish a material balance for mercury. Ash samples of the Unit 4 electrostatic precipitator (ESP) which is part of the Unit 4 stack reheat system were also collected and analyzed.
- Obtain and analyze representative samples of the coal for the purpose of determining heating value, ash content, sulfur and chlorine levels.
- Determine the carbon content of the ash streams.
- Perform mercury measurements using two mercury CEMS in conjunction with mercury testing at the outlet on each of the three units.
- Document corresponding boiler, baghouse and scrubber operations along with facility CEMS data.

The sampling, analytical and Quality Assurance (QA) procedures used during this test program were documented in the Site-Specific Sampling/Testing, Analytical and QA/QC Plan and in the Quality Assurance Project Plan (QAPP) dated May 1999. Although not a specific objective of

the original program the major ash elements for the coal, baghouse ash, Unit 4 ESP ash and scrubber liquid samples were determined to provide additional characterization of these streams.

1.3 SAMPLE LOCATIONS

Representative samples from the following solid streams were collected and analyzed:

- Clean Coal Feed (Units 2, 3 and 4).
- Baghouse Ash (Unit 2).
- ESP Ash (Unit 4).

Representative samples from the following liquid streams were collected and analyzed:

- Particulate Scrubber Overspray (Unit 3).
- Particulate Scrubber Discharge (Unit 3).
- FGD Scrubber Overspray (Unit 4).
- FGD Scrubber Discharge Overflow (Unit 4)

Flue gas stream emission samples were collected at the following locations:

- Unit 2 Baghouse Inlet and Outlet.
- Unit 3 Particulate Scrubber Inlet and Outlet.
- Unit 4 FGD Scrubber Inlet and Outlet.

1.4 POLLUTANTS MEASURED

Table 1-1 presents a summary of process solid and flue gas streams and the associated pollutants and parameters measured during the test program.

1.5 TEST PROGRAM KEY PERSONNEL

The key personnel who coordinated and performed the test program, their project responsibilities and their phone numbers are:

TABLE 1-1

BOSWELL ENERGY CENTER
UNITS 2, 3 AND 4
PROCESS SOLID, LIQUID AND FLUE GAS STREAMS
WITH POLLUTANTS/PARAMETERS

Location/Stream Type	Pollutant or Parameter
Units 2, 3 and 4 Clean Coal Feed	▪ Mercury. ▪ Chlorine. ▪ Sulfur. ▪ Major ash elements (SiO_2, Al_2O_3, TiO_3, Fe_2O_3, CaO, MgO, Na_2O, K_2O, P_2O_5, SO_3) ▪ Heating value. ▪ Moisture value. ▪ Ultimate and proximate analyses.
Unit 2 Baghouse Fly Ash Unit 3 Particulate Scrubber Solid Unit 4 FGD Scrubber Solid Unit 4 ESP Ash	▪ Mercury. ▪ Carbon. ▪ Major ash elements.
Unit 3 Scrubber Overspray Liquid Unit 3 Particulate Scrubber Discharge Liquid Unit 4 FGD Overspray Liquid Unit 4 FGD Scrubber Discharge (Liquid Overflow)	▪ Mercury. ▪ Major ash elements. ▪ Ph
Unit 2 Baghouse Inlet/Outlet, Unit 3 Scrubber Inlet/Outlet, Unit 4 FGD Scrubber Inlet/Outlet	▪ Particulate and vapor phase mercury (including speciation of vapor phase).
Unit 2 Baghouse Outlet Unit 3 Scrubber Outlet Unit 4 FGD Scrubber Outlet	▪ Total mercury (CEM Analyzers)
Unit 4 ESP (Stack Reheat) Duct	▪ Volumetric Flow

Note: Following sample collection, the Unit 3 scrubber discharge and the Unit 4 FGD discharge samples were filtered to obtain the scrubber solid samples.

Contact Name	Project Responsibility	Telephone Number	Facsimile Number
MP			
Mr. Tim Hagley	Corporate Environmental Contact	(218) 722-5642 x 3423	(218) 723-3916
Mr. Joe Muller	Plant Environmental Engineer	(218) 328-5711 x4763	(218) 328-5711
DOE			
Mr. Tom Brown	Project Manager	(412) 386-4691	(412) 386-5917
Mr. Scott Renninger	Project Manager	(304) 285-4790	304-285-4638
EPA			
Mr. William Grimley	ICR Program Manager	(919) 541-1065	(919) 541-1039
WESTON			
Mr. Jeff O'Neill	Project Leader	(610) 701-7201	(610) 701-7401
EERC			
Mr. Dennis Laudal	Project Leader	(701) 777-5138	(701) 777-5181
CONSOL			
Mr. Matt Devito	Project Leader and Process Observer	(412) 854-6679	(412) 854-6613

2. PLANT AND SAMPLING LOCATION DESCRIPTIONS

2.1 BOSWELL ENERGY CENTER

The Boswell Energy Center consist of four electric generating units. All of the units at this Station burn western subbituminous coal delivered to the Station by rail from the Powder River Basin area of Montana and Wyoming.

2.1.1 Unit 2

Identical Units 1 and 2, built in the late 1950s, each have a heat input rating of 750 MMBtu/hr and a generating capacity of 74 MW gross. These units are equipped with Riley wall-fired boilers with low-NO_x burners. A baghouse is used to control the particulate emissions for both Units 1 and 2. The baghouses use reverse air for cleaning and are designed for 99.7% particulate collection efficiency with an air-to-cloth ratio of 1.9:1. The flue gas exit temperatures range from 300° to 400° Fahrenheit (F) and are normally ducted to a common stack, with Unit 3 for use as reheat for Unit 3 particulate scrubber flue gases.

See Figure 2-1 for the Unit 2 process schematic.

2.1.2 Unit 3

Unit 3 was constructed in the early 1970s and has a heat input rating of 3355 MMBtu/hr and a generating capacity of 375 MW gross. This unit has a tangentially-fired combustion Engineering (CE) boiler equipped with a Krebs Engineers Elbair Wet Scrubber for particulate control. This scrubber uses high pressure water sprays and punch plates for the particulate collection system. The induced draft fans are located in the wet gas stream exiting the scrubber. The addition of hot flue gas from Units 1 and 2 is used to reheat Unit 3 flue gas as it exits the stack. The wet scrubber is designed for 96% particulate collection efficiency and also removes approximately 25% of the SO_2.

See Figure 2-2 for the Unit 3 process schematic.

Sample Point Number		Sample Identification
Solids		
S-1	Unit 2	Clean Coal Feed
S-2	Unit 2	Baghouse Fly Ash
Flue Gas		
A-1	Unit 2	Baghouse Inlet
A-2	Unit 2	Baghouse Outlet
A-3	Unit 2	Baghouse Recirculation Duct

● Sampling Points

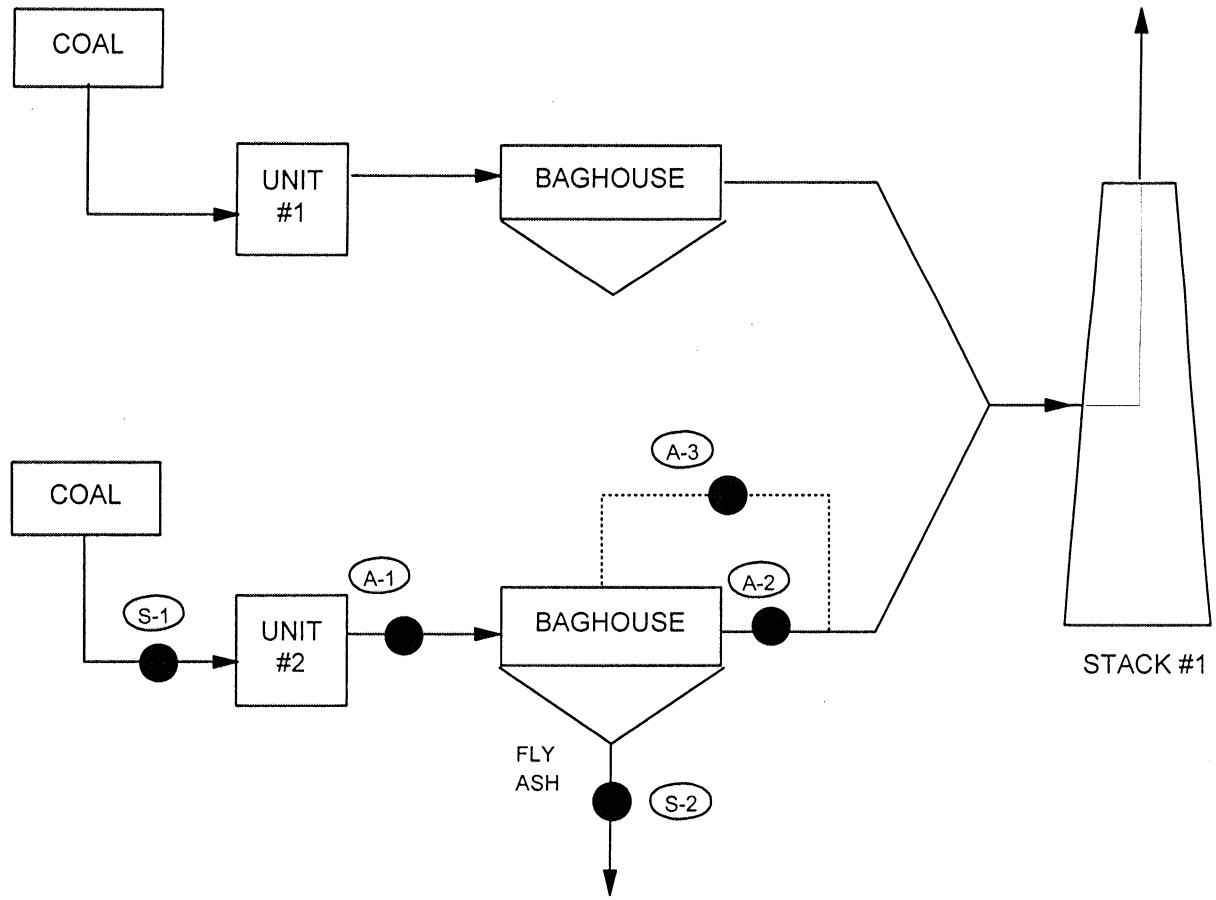

FIGURE 2-1
PROCESS SCHEMATIC AND SAMPLING/TESTING LOCATIONS
ICR TEST PROGRAM
BOSWELL ENERGY CENTER UNIT 2

Sample Point Number		Sample Identification
Solids		
S-1	Unit 3	Clean Coal Feed
S-2	Unit 3	Particulate Scrubber Solids
Liquids		
L-1	Unit 3	Particulate Scrubber Overspray Liquid
L-2	Unit 3	Particulate Scrubber Discharge
Flue Gas		
A-1	Unit 3	Scrubber Inlet
A-2	Unit 3	Scrubber Outlet

● Sampling Points

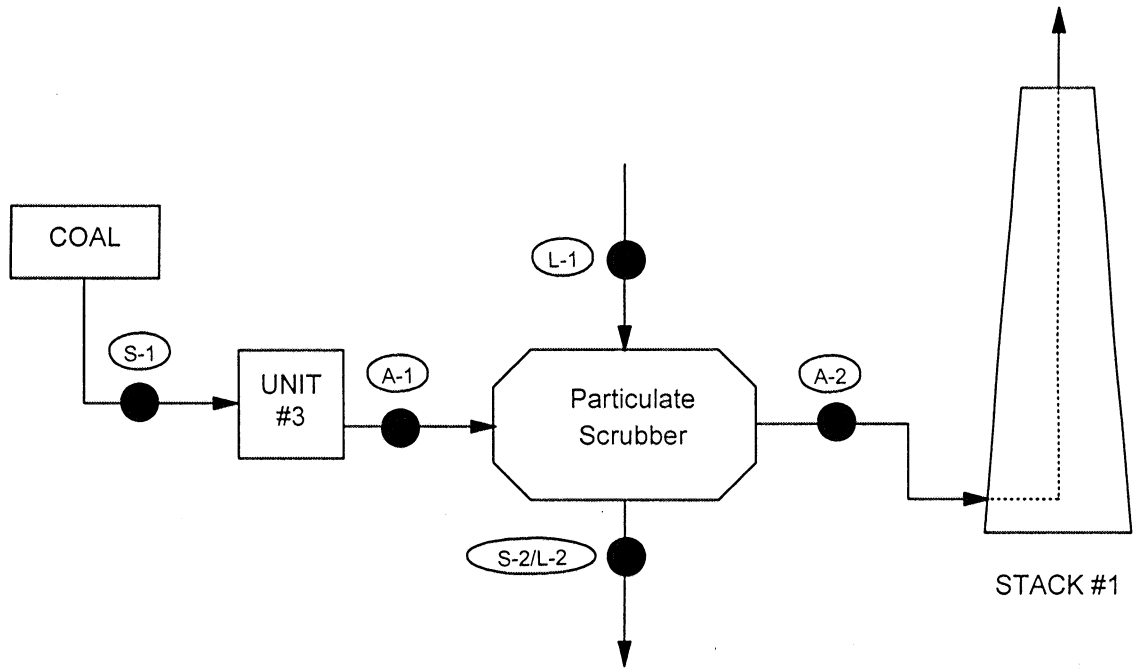

FIGURE 2-2
PROCESS SCHEMATIC AND SAMPLING/TESTING LOCATIONS
ICR TEST PROGRAM
BOSWELL ENERGY CENTER UNIT 3

2.1.3 Unit 4

Unit 4 was constructed in early 1980 and it is the largest boiler at the Boswell Energy Center with a heat input rating of 5109 MMBtu/hr and a generating capacity of 580 MW gross. This unit has a tangentially-fired Combustion Engineering boiler which is designed for stagged combustion to reduce NO_X emissions. This unit is equipped with an air quality control system supplied by Peabody Process Systems. It consists of four separate modules each having a venturi scrubber. The venturi scrubber is designed for 99.7 particulate collection efficiency, and 85.4% SO_2 removal (with designed reheat). The reheat bypass is equipped with an ESP to maintain particulate emissions within specifications. The maximum bypass flow to the ESP is 5% of the total flue gas and is nominally 2%.

See Figure 2-3 for the Unit 4 process schematic.

2.2 PROCESS SAMPLING LOCATIONS AND SAMPLING PROCEDURES

The process stream samples discussed below were collected by CONSOL field personnel. All sampling was conducted following standard procedures based on sound engineering practices. These samples were transported from the Clay Boswell Energy Center to the CONSOL laboratory located in Library, PA by CONSOL personnel. Upon arrival, the samples were checked for completeness and then logged into our analytical database. Sample request sheets were submitted and where appropriate, additional sample preparation was completed. A summary of the sampling procedure used for each of the sample streams is discussed as follows:

2.2.1 Unit 2

2.2.1.1 Unit 2 Coal Sampling

Representative pulverized coal samples from Unit 2 were obtained from discharge of the volumetric feeders. These feeders are located immediately upstream of the coal mills. There are four feeders. Feeders A, C, and D are similar and feed similar volumes of coal. Feeder B is approximately twice as large as the other feeders and delivers approximately twice the amount of coal. During the testing, Unit 2 fired a blended coal from Nerco and Peabody. Nerco coal was

Sample Point Number		Sample Identification
Solids		
S-1	Unit 4	Clean Coal Feed
S-2	Unit 4	FGD Scrubber Solid
S-3	Unit 4	ESP Ash
Liquids		
L-1	Unit 4	FGD Overspray Liquid
L-2	Unit 4	FGD Scrubber Liquid Overflow
Flue Gas		
A-1	Unit 4	FGD Scrubber Inlet
A-2	Unit 4	FGD Scrubber Outlet
A-3	Unit 4	ESP Outlet

● Sampling Points

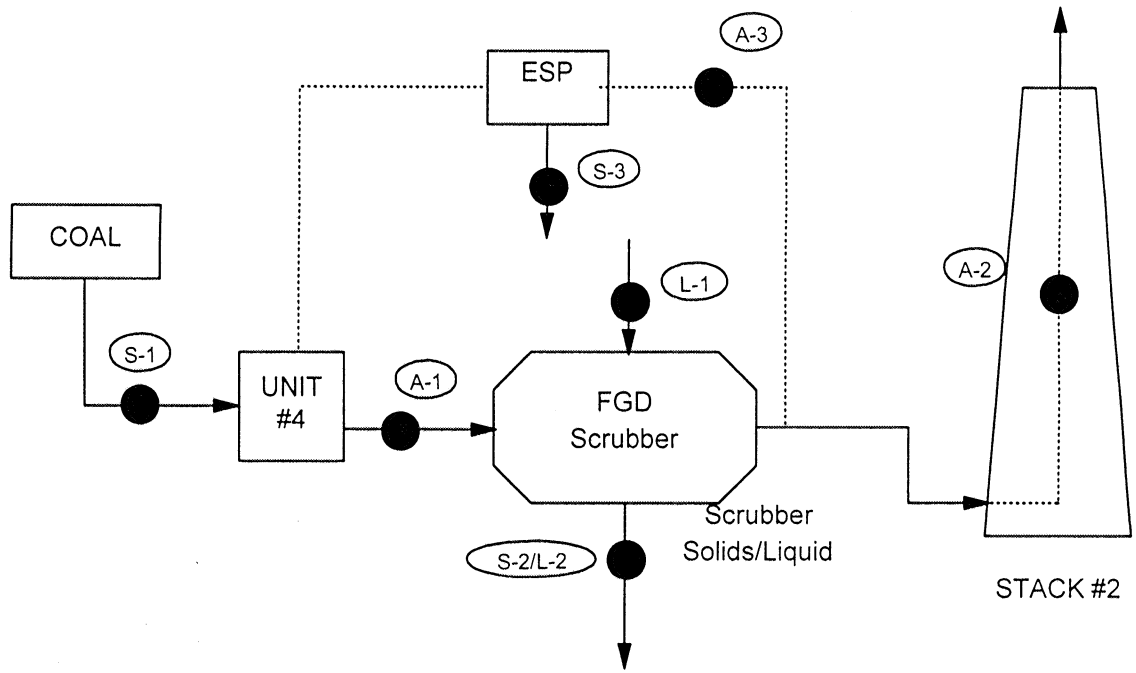

FIGURE 2-3
PROCESS SCHEMATIC AND SAMPLING/TESTING LOCATIONS
ICR TEST PROGRAM
BOSWELL ENERGY CENTER UNIT 4

fed through feeders A and B while Peabody coal was fed through feeders C and D. As a result of the feeder size, the approximate coal blend was 60% Nerco and 40% Peabody.

Sampling was conducted at 20 minute intervals from feeders A and D. The sample increments were obtained by opening the lower access window and inserting a custom-made flat scoop that collected an entire cross-section of coal as it dropped from the feeder bucket to the mill hopper. A total of 18 (2 per each sampling period) increments were obtained. To achieve the proper blend, 11 samples were obtained from feeder A and 7 from feeder D. The first sample increment was taken during the onset of the flue gas mercury sampling and the final sample increment was obtained near the completion of the flue gas sampling. The condition of the sampling equipment was checked and verified prior to each use as was the operating status of the boiler. All of the increments were stored in a double-lined plastic bag that was further sealed in an air-tight plastic bucket.

2.2.1.2 Unit 2 Baghouse Ash Hopper Sampling

Unit 2 is equipped with a fabric filter baghouse for particulate removal. The baghouse is equipped with eight ash hoppers. Each hopper is fitted with an access pipe located near the bottom of the hopper and angled toward the base of the hopper. Sampling was conducted through these access pipes using a sampling thief (slotted tube). The hoppers were cleaned out by plant personnel just prior to the flue gas measurements. After clean-out, the hoppers were allowed to fill with ash. A fly ash sample was collected from each hopper utilizing a sample thief inserted into the base of the hopper through the access pipes. The composite samples were size-reduced on-site and retained in pre-cleaned glass bottles.

2.2.2 Unit 3

2.2.2.1 Unit 3 Coal Sampling

Representative pulverized coal samples from Unit 3 were obtained from sample access ports located on each of the feeder hoppers. There are six hoppers that supply coal to five volumetric feeders. The feeders are identified as A through E. All feeders supply similar volumes of coal with feeder A out of service. During the testing, Unit 3 fired a blended coal from Nerco and

Peabody. Nerco coal was fed through feeder E with Peabody coal fed through all the other operating feeders. This resulted in an approximate coal blend of 25% Nerco and 75% Peabody.

Sampling was conducted at 20 minute intervals. The sample increments were obtained by inserting a sample thief (slotted pipe) into the access port and collecting the coal as it slowly feed out of the hopper. A total of 40 increments were obtained (5 per sampling period). To achieve the proper blend, an equal number of increments were obtained from each feeder. The first sample increment was taken during the onset of the flue gas Hg sampling and the final sample increment was obtained near the completion of the flue gas Hg sampling. The condition of the sampling equipment was checked and verified prior to each use, as was the operating status of the boiler. All of the increments were stored in a double-lined plastic bag that was further sealed in an air-tight plastic bucket.

2.2.2.2 Unit 3 Particulate Scrubber Slurry (Scrubber Solids & Slurry Filtrate)

Unit 3 utilizes a wet particulate scrubber for particulate removal. The scrubber discharge water is pumped from holding tanks located below the scrubber to a flume box where it is combined with other liquid streams. The combined liquids in the flume box are directly conveyed to a clarifier for solids removal. The particulate slurry sample was obtained by collecting samples at regular intervals from the outlet of the scrubber water discharge pipe located in the flume box. The samples were collected with a Teflon dipper and transferred to pre-cleaned polyethylene collection bottles. Eight sample increments were collected at regular intervals to coincide with the flue gas measurements.

2.2.2.2.1 Slurry Filtrate

At the completion of each test, the sample increments were composited. The scrubber solids were vacuumed filtered using a 24.0 centimeter (cm) Buchner® funnel fitted with a 24.0 cm Whatman® No. 1 filter paper. The filtrate was collected in a 4 liter (L) acid-cleaned filter flask. The filtrate was split into three samples for subsequent analysis. An 8 oz sample was used for a field pH measurement and then discarded. A 500 milliliter (mL) sample was retained in a pre-cleaned bottle for analysis of ionic species. A second 500 mL sample was retained in a pre-cleaned polyethylene bottle and preserved with trace grade nitric acid for metals analysis

including mercury. The samples retained for analysis were then transferred to an ice chest for cold storage and transport to the CONSOL laboratory located in Library, Pennsylvania by company personnel. The samples were then logged into the laboratory and analytical request sheets were completed. The liquid samples were then transferred from the ice chest to our sample storage refrigerator.

2.2.2.2.2 Scrubber Solids

The filter paper containing the scrubber solids was transferred to a 14" diameter aluminum pan which was placed in a forced-air oven. The scrubber solids were dried for ~4 hours at 60°C. The percent solids was determined from the mass of the solids and slurry. After drying, the scrubber solids were transferred to a pre-cleaned glass bottle.

2.2.2.3 Unit 3 Scrubber Overspray Water

The overspray water is used as a downwash for the particulate scrubber trays. This sample was obtained from a tap located on the spraywater header. Sample increments were taken at regular intervals throughout the gas measurements. These increments were stored in a polyethylene sample bottle. This sample was split into three samples for subsequent analysis. An 8 oz sample was used for a field pH measurement and then discarded. A 500 mL sample was retained in a pre-cleaned polyethylene bottle for analysis of ionic species. A second 500 mL sample was retained in a pre-cleaned bottle and preserved with trace grade nitric acid for metals analysis including mercury. The samples retained for analysis were then transferred to an ice chest for cold storage and transport to the CONSOL laboratory located in Library, Pennsylvania by company personnel. The samples were then logged into the laboratory and analytical request sheets were completed. The liquid samples were then transferred from the ice chest to our sample storage refrigerator.

2.2.3 Unit 4

2.2.3.1 Unit 4 Coal Sampling

Representative pulverized coal samples from Unit 4 were obtained from sample access ports located on each of the feeder hoppers. There are seven hoppers that supply coal to eight volumetric feeders. The feeders are identified as A through G. All feeders supply similar volumes of coal. Feeder A was out of service during the first test and feeder E was out of service for tests 2 and 3. During the testing, Unit 4 fired a blended coal from Nerco, Peabody and Decker coal suppliers. The coal was fed to the boiler in a manner that resulted in one-third Nerco, one-third Peabody, and one-third Decker. Sampling was conducted at 20 minute intervals. The sample increments were obtained by inserting a sample thief (slotted pipe) into the access port and collecting the coal as it slowly fed out of the hopper. A total of 40 increments were obtained (5 per sampling interval). To achieve the proper blend, an equal number of increments were obtained from each feeder. The first sample increment was taken during the onset of the flue gas Hg sampling and the final sample increment was obtained near the completion of the flue gas Hg sampling. The condition of the sampling equipment was checked and verified prior to each use as was the operating status of the boiler. All of the increments were stored in a double-lined plastic bag that was further sealed in an air-tight plastic bucket.

2.2.3.2 Unit 4 FGD Scrubber Slurry (Scrubber Solids & Slurry Filtrate)

Unit 4 utilizes a wet FGD scrubber for SO_2 and particulate removal. The FGD scrubber liquid is constantly re-circulated with some fraction removed through a continuous blowdown (overflow). The FGD scrubber slurry sample was obtained from the two FGD blowdown pipes. Prior to testing CONSOL personnel drilled a 1" hole in each blowdown pipes. Samples were obtained at regular intervals by inserting a slotted pipe into the holes and collecting a portion of the blowdown liquor in a 5 gallon bucket. This slurry solution was stirred and then a portion of this liquor was decanted into a 1000 mL pre-cleaned polyethylene sample bottle. Eight sample increments were collected at regular intervals to coincide with the flue gas measurements.

2.2.3.2.1 Slurry Filtrate

At the completion of each test, the sample increments were composited. The FGD scrubber solids were vacuumed filtered using a 24.0 cm Buchner® funnel fitted with a 24.0 cm Whatman No. 1 filter paper. The filtrate was collected in a 4L acid-cleaned filter flask. The scrubber slurry filtrate was split into three samples for subsequent analysis. An 8 oz sample was used for a field pH measurement and then discarded. A 500 mL sample was retained in a pre-cleaned polyethylene bottle for analysis of ionic species. A second 500 mL sample was retained in a pre-cleaned polyethylene bottle and preserved with trace grade nitric acid for metals analysis including mercury. The samples retained for analysis were then transferred to an ice chest for cold storage and transport to the CONSOL laboratory located in Library, Pennsylvania by company personnel. The samples were then logged into the laboratory and analytical request sheets were completed. The liquid samples were then transferred from the ice chest to our sample storage refrigerator.

2.2.3.2.2 Scrubber Solids

The filter paper containing the FGD scrubber solids was transferred to a 14" diameter aluminum pan which was placed in a forced-air oven. The scrubber solids were dried for ~4 hours at 60°C. The percent solids was determined from the mass of the solids and slurry. After drying, the scrubber solids were transferred to a pre-cleaned glass bottle.

2.2.3.3 Unit 4 ESP Ash Hopper Sampling

Unit 4 is equipped with an (ESP) that controls particulate emissions on the ~5% gas flow that bypasses the FGD scrubber. The ESP is equipped with two ash hoppers. Each hopper is fitted with a pressurized holding bin located downstream of an air-lock valve immediately below the hopper. Sampling was conducted through a pressure release valve located on the bin of the second hopper. A fly ash sample was collected from this valve by placing a bucket, fitted with an expansion bag, over the opened release valve during the entire duration of the flue gas measurements. The composite samples were size-reduced on-site and transferred to pre-cleaned glass bottles.

2.2.3.4 Unit 4 Scrubber Overspray Water

The overspray water is used as a downwash for the FGD/particulate scrubber trays. This sample was obtained from a tap located on the spraywater pressure line feeding the orifice flow meter. Sample increments were taken at regular intervals throughout the gas measurements. These increments were stored in a polyethylene sample bottle. This sample was split into three samples for subsequent analysis. An 8 oz sample was used for a field pH measurement and then discarded. A 500 mL sample was retained in a pre-cleaned polyethylene bottle for analysis of ionic species. A second 500 mL sample was retained in a pre-cleaned polyethylene bottle and preserved with trace grade nitric acid for metals analysis including mercury. The samples retained for analysis were then transferred to an ice chest for cold storage and transport to the CONSOL laboratory located in Library, Pennsylvania by company personnel. The samples were then logged into the laboratory and analytical request sheets were completed. The liquid samples were then transferred from the ice chest to our sample storage refrigerator.

2.3 FLUE GAS SAMPLING LOCATIONS

2.3.1 Unit 2 Baghouse Inlet

The baghouse inlet testing was performed in a horizontal section of steel ductwork that was 114 inches deep by 132 inches high (inside dimensions). Five test ports (A through E) that were used for multi-point sampling traverses were positioned vertically at a location 1.3 equivalent diameters (156 inches) downstream and 0.46 diameters (56 inches) upstream of the nearest gas stream flow disturbances. EPA Method 1 requires a minimum of 25 traverse points, 5 per port axis, for this duct configuration. The test port locations and traverse point distances are provided in Figure 2-4.

2.3.2 Unit 2 Baghouse Outlet

The baghouse outlet testing was performed in a vertical section of the 120 inches x 120 inches (internal dimensions) steel ductwork. The ports were positioned horizontally at a location 5.5 equivalent diameters (55 feet) downstream and 0.5 diameters (5 feet) upstream of the nearest gas stream flow disturbances. EPA Method 1 requires a minimum of 30 traverse points, 5 per port

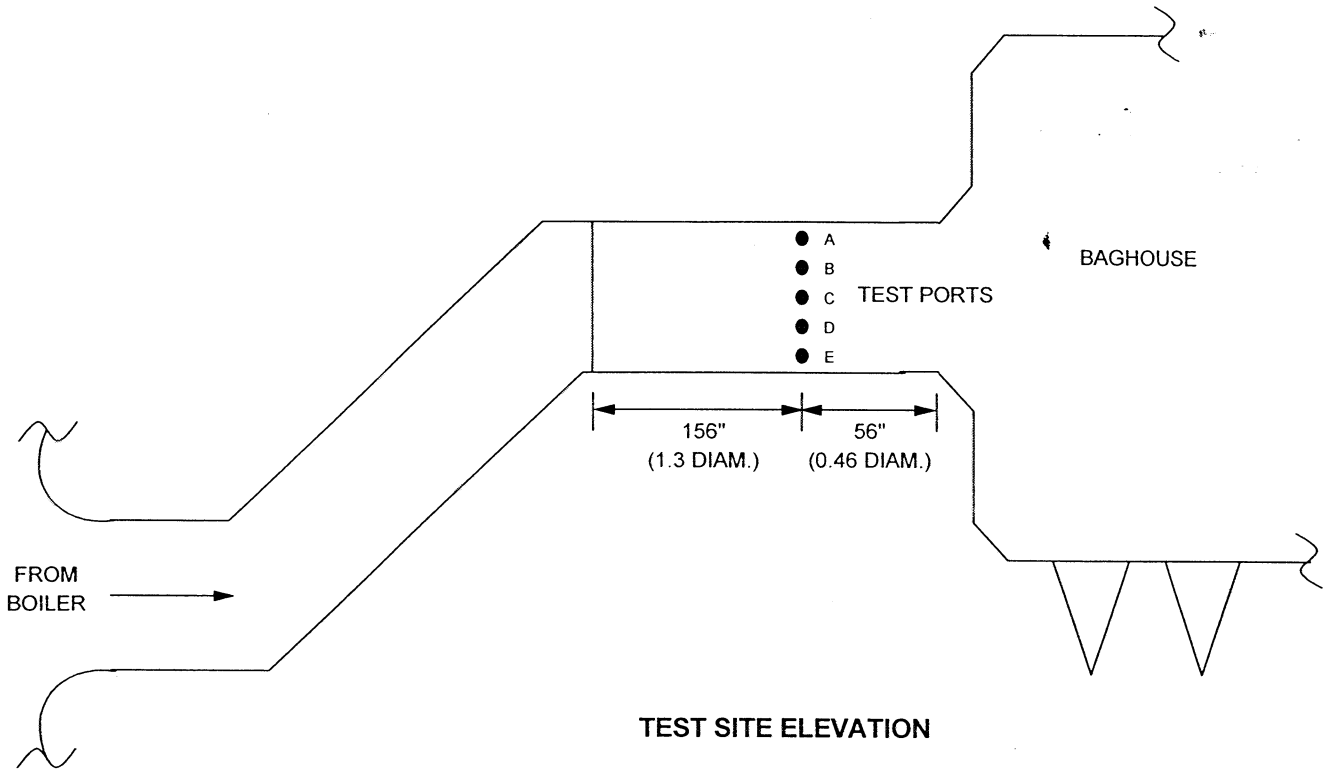

TEST SITE ELEVATION

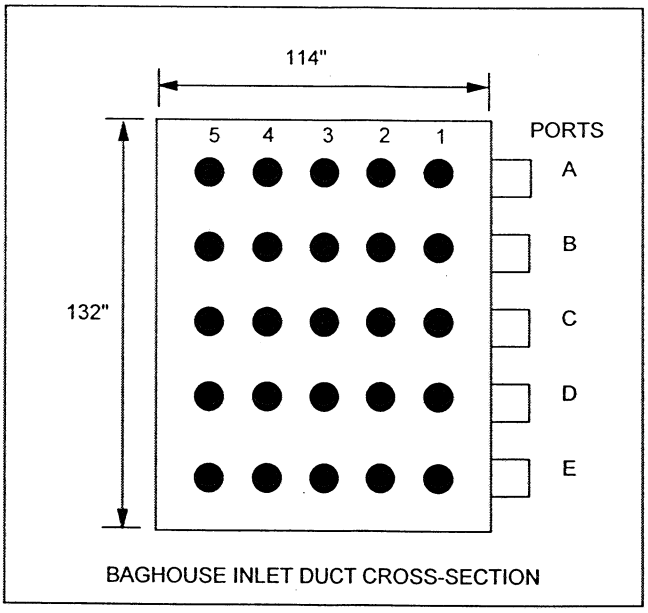

TEST PORT/ TRAVERSE POINT	DISTANCE FROM INSIDE NEAR WALL (INCHES)
A, B, C, D, E - 1	11 3/8
2	34 1/4
3	57
4	79 7/8
5	102 5/8

DRAWING NOT TO SCALE

FIGURE 2-4
UNIT 2 BAGHOUSE INLET DUCT TEST SITE
PORT AND TRAVERSE POINT LOCATIONS

D:\Freelance Drawings\Unit2 BagInletDuct

axis, for this configuration. The baghouse outlet test port locations and traverse point distances are indicated in Figure 2-5.

A portion of the filtered flue gas stream downstream of the baghouse outlet test site is recirculated back to the baghouse at intermittent rates to clean an offline compartment. Figure 2-5 illustrates the location of the baghouse recirculation air duct and associated ID fan in relation to the baghouse outlet test location.

2.3.3 Unit 3 Scrubber Inlet

The inlet samples were collected at the existing sample ports in the duct at the inlet to the particular scrubber. A schematic and cross section of the inlet location is shown in Figure 2-6.

The sampling ports are located in a horizontal section of steel ductwork that is 121″ deep and 114 feet wide. Eighteen sample ports (A through R) are aligned on the top of the duct 2 feet downstream and 8 feet upstream of the nearest gas stream flow disturbances. These test ports do not meet the EPA Method 1 criteria. No locations exist between the boiler and the wet particulate scrubber that would satisfy the Method 1 requirements.

Sample traverse points for the inlet location were selected and are shown in Figure 2-6. The duct is split internally in half. Due to internal obstructions, several of the sample ports were not available for Ontario Hydro testing.

Of the 18 test ports, eight (B, C, D, I, J, N, P and Q) were available for isokinetic mercury sampling. Velocity measurements were performed in conjunction with the mercury testing on ports E, F, G, H, K, L, M and O to determine the total volumetric flow at the inlet location. Test ports A and R contained scrubber pressure drop measurement equipment and were not available for testing.

2.3.4 Unit 3 Scrubber Outlet

The scrubber outlet samples were collected at the existing sample ports in the exhaust duct from the wet particulate scrubber. Samples could not be taken at the stack test location because flue gases from Units 1, 2 and 3 use the common stack. The ports are in position 4′ upstream of

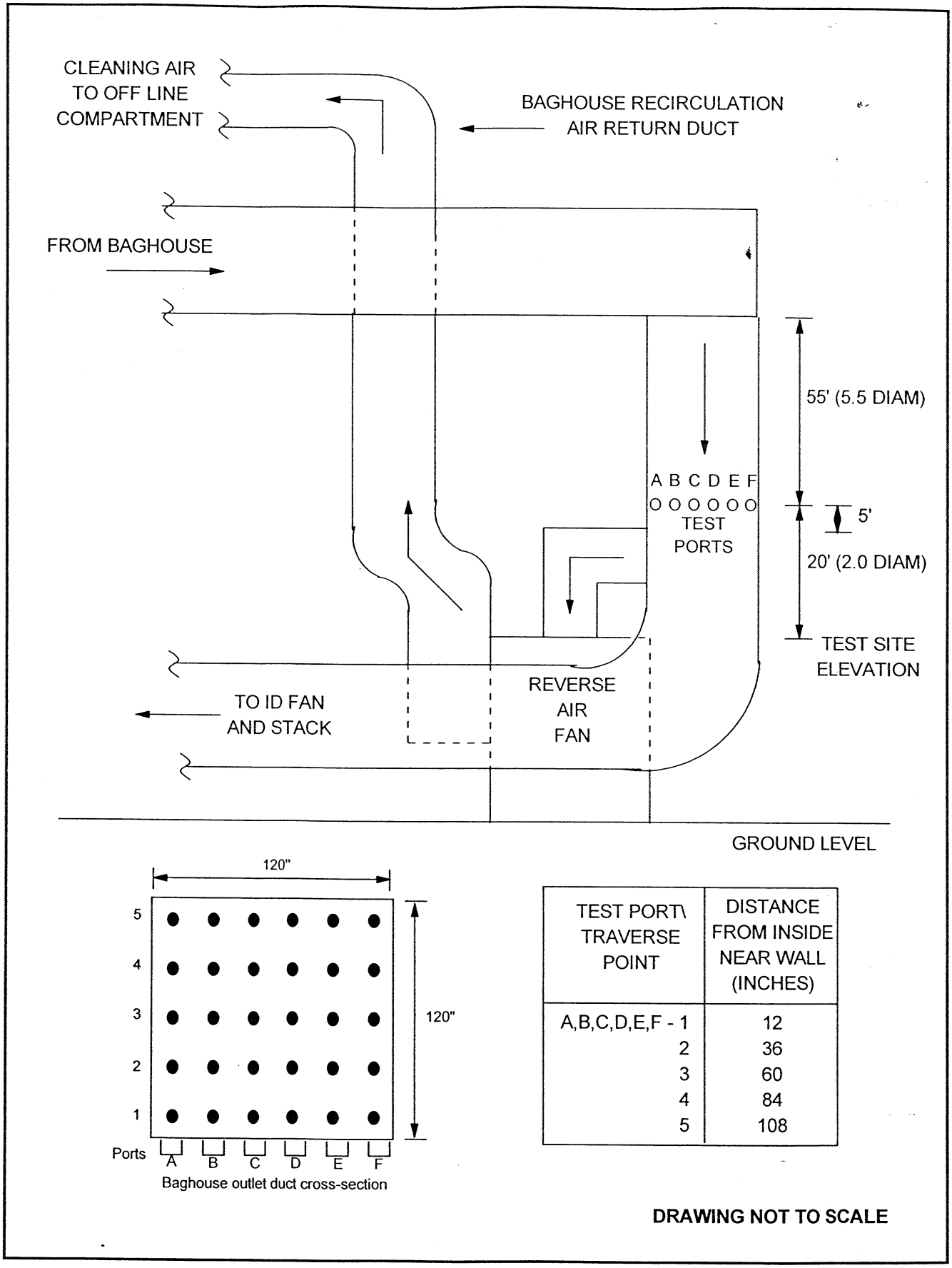

TEST PORT\ TRAVERSE POINT	DISTANCE FROM INSIDE NEAR WALL (INCHES)
A,B,C,D,E,F - 1	12
2	36
3	60
4	84
5	108

FIGURE 2-5
UNIT 2 BAGHOUSE OUTLET DUCT TEST SITE
PORT AND TRAVERSE POINT LOCATIONS

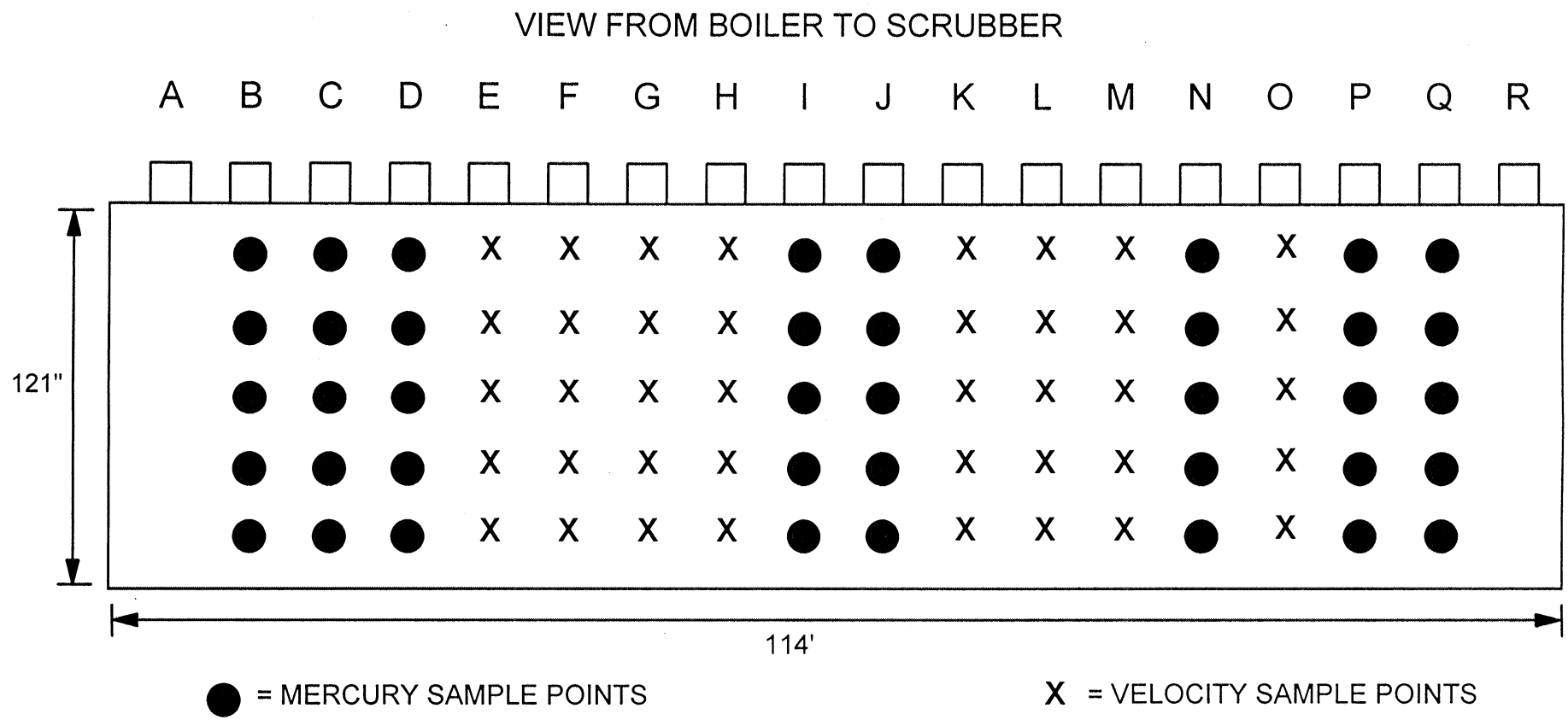

TEST PORT\ TRAVERSE POINT	DISTANCE FROM INSIDE NEAR WALL (INCHES)
B - Q - 1	12 1/8
2	36 1/4
3	60 1/2
4	84 3/4
5	108 3/4

FIGURE 2-6
UNIT 3 SCRUBBER INLET TEST SITE
PORT AND TRAVERSE POINT LOCATIONS

where the flow turns 90° up into stack and 10′ downstream from a bend in the duct leading from the scrubber discharge fans. The sampling location for the exhaust duct from the Unit 3 wet particulate scrubber did not meet EPA Method 1 criteria. The sampling ports are located in a horizontal section of steel ductwork that is 15′ wide by 30′ deep. Five sample ports (A through E) are aligned on the top of the duct.

Due to the 30′ depth of the duct only one-half of the duct was traversed for sampling. Sample traverse points for one-half (15′) of the duct depth were selected according to EPA Method 1. The scrubber outlet volumetric flow was calculated based on the volumetric flow measured at the scrubber inlet location accounting for dilution air introduced across the scrubber.

A schematic and cross section of the outlet location are shown in Figure 2-7.

2.3.5 Unit 4 Scrubber Inlet

The inlet samples were collected at existing sample ports in the duct at the inlet to the scrubber. A schematic and cross section of the inlet location are shown in Figure 2-8. The sampling ports are located in two horizontal sections of steel ductwork. Four sample ports are aligned on the top of each duct.

During the test program all isokinetic mercury testing was performed on one (Duct B) of the two ducts. Velocity measurements were performed on the other (Duct A) in order to calculate the total volumetric flow at the inlet to the scrubber.

The test ports on Duct A were positioned 167″ (0.9 diameters) upstream and 492″ (2.5 diameters) downstream of flow disturbances. The duct is 157″ deep and 264″ wide where the test ports are located.

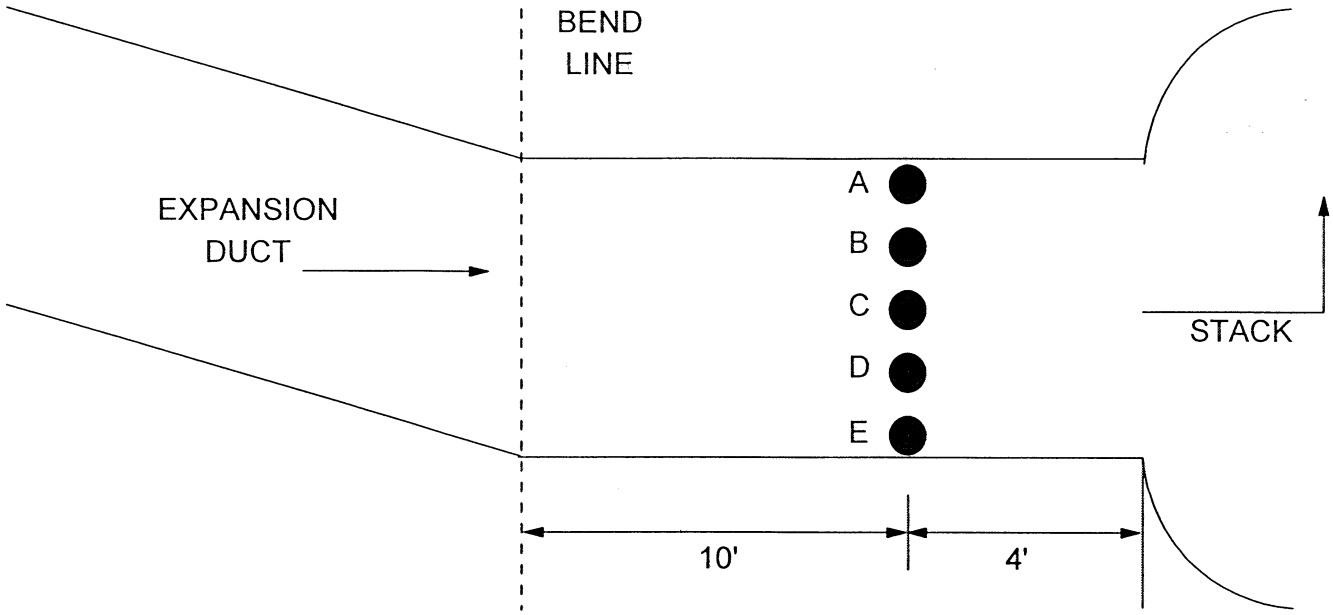

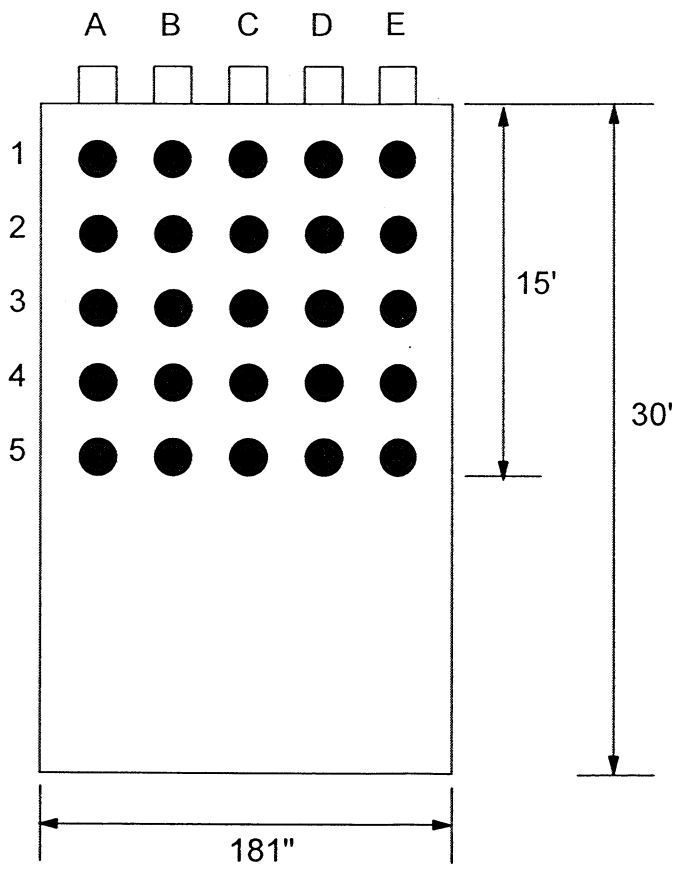

TEST PORT/ TRAVERSE POINT	DISTANCE FROM INSIDE NEAR WALL (INCHES)
A,B,C,D,E-1	18
2	54
3	90
4	126
5	162

FIGURE 2-7
UNIT 3 SCRUBBER OUTLET TEST SITE
PORT AND TRAVERSE POINT LOCATIONS

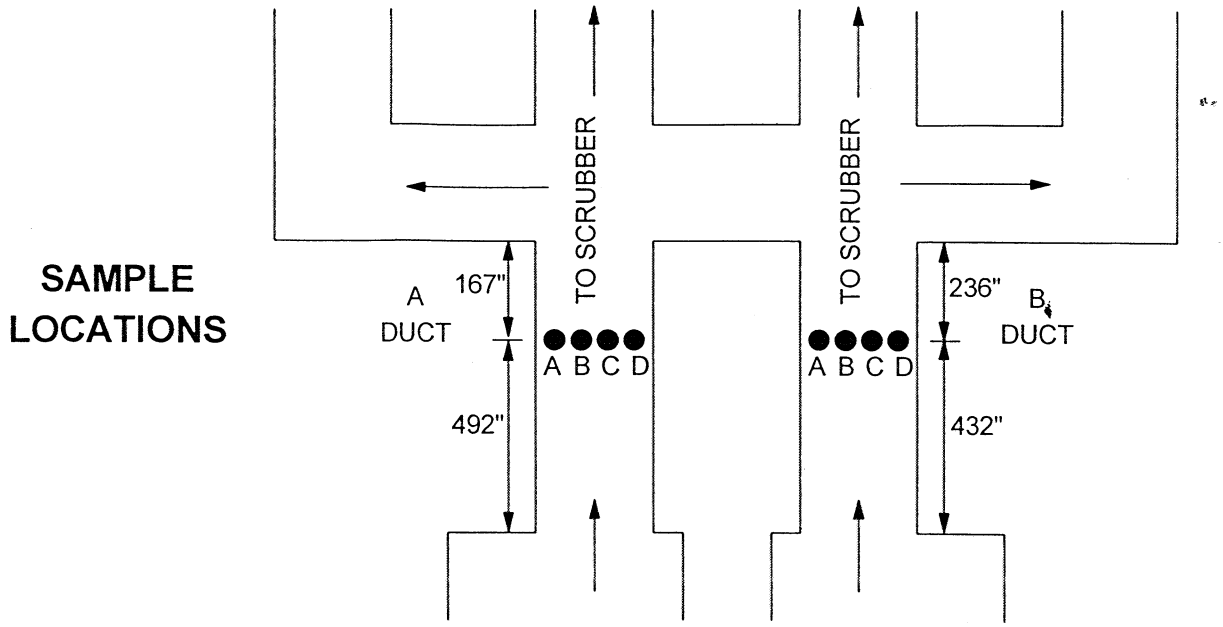

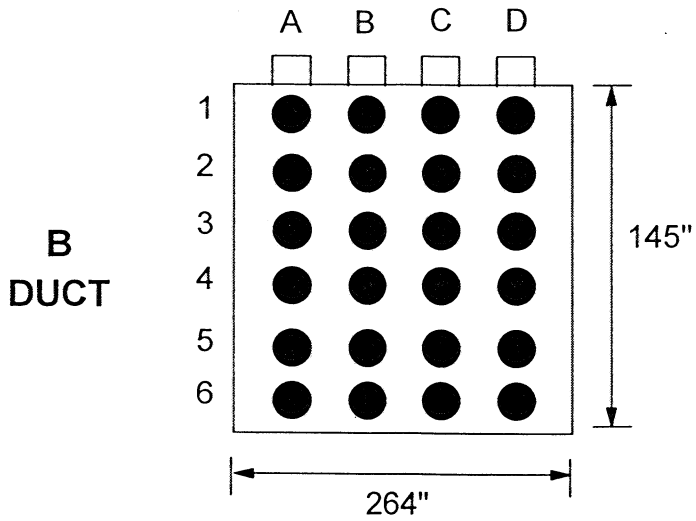

ISOKINETIC TEST PORT/ TRAVERSE POINT	DISTANCE FROM INSIDE NEAR WALL (INCHES)
A,B,C,D-1	12
2	36
3	60 1/2
4	84 1/2
5	108 3/4
6	132 7/8

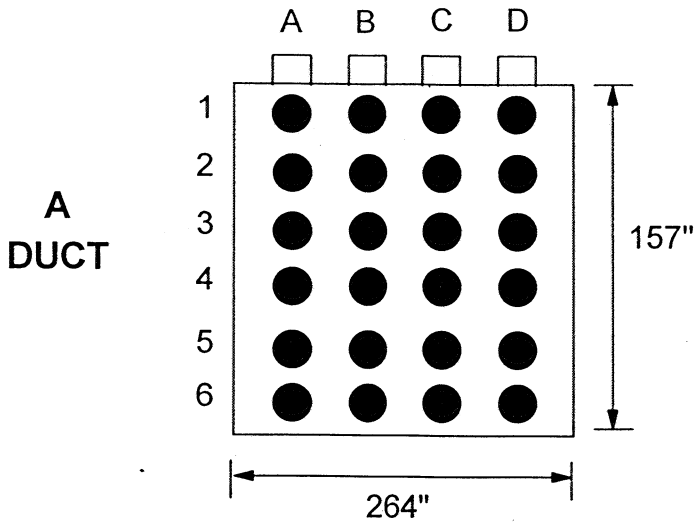

VELOCITY TEST PORT/ TRAVERSE POINT	DISTANCE FROM INSIDE NEAR WALL (INCHES)
A,B,C,D-1	13
2	39 1/4
3	65 1/2
4	91 1/2
5	117 3/4
6	144

FIGURE 2-8
UNIT 4 SCRUBBER INLET TEST SITES
PORT AND TRAVERSE POINT LOCATIONS

Duct B is 145″ deep and 264″ wide where the test ports are located. The ports are positioned 236″ (1.3 diameters) upstream and 432” (2.4 diameters) downstream of flow disturbances.

A total of six points per port (24 total) were used for isokinetic sampling in Duct B and to measure the gas stream velocity in Duct A.

2.3.6 Unit 4 Scrubber Outlet

A total of four (4) 6″ ID test ports are in place on the 37′ 4″ ID stack which serves Unit 4. The test ports are located 324′ (8.7 diameters) from the nearest downstream disturbance and 235′ (6.4 diameters) from the stack discharge point.

A total of three points per port (12 points total) were sampled. The Unit No. 4 stack is an ideal test location and satisfies all EPA Method 1 criteria for test port location. See Figure 2-9 for a schematic of the Unit No. 4 stack test location.

2.3.7 Unit 4 ESP Duct

Volumetric flow measurements were obtained on the outlet of the Unit 4 ESP flue gas reheat duct. Two 4″ ID test ports are in place on the 80″ ID horizontal duct. The test ports are located 30’ (4.5 diameters) from the nearest downstream disturbance and 3’ (0.4 diameter) from the nearest upstream disturbance.

A total of 16 traverse points (8 per axis) per EPA Method 1 were used to measure the gas stream velocity during each mercury test period on Unit 4.

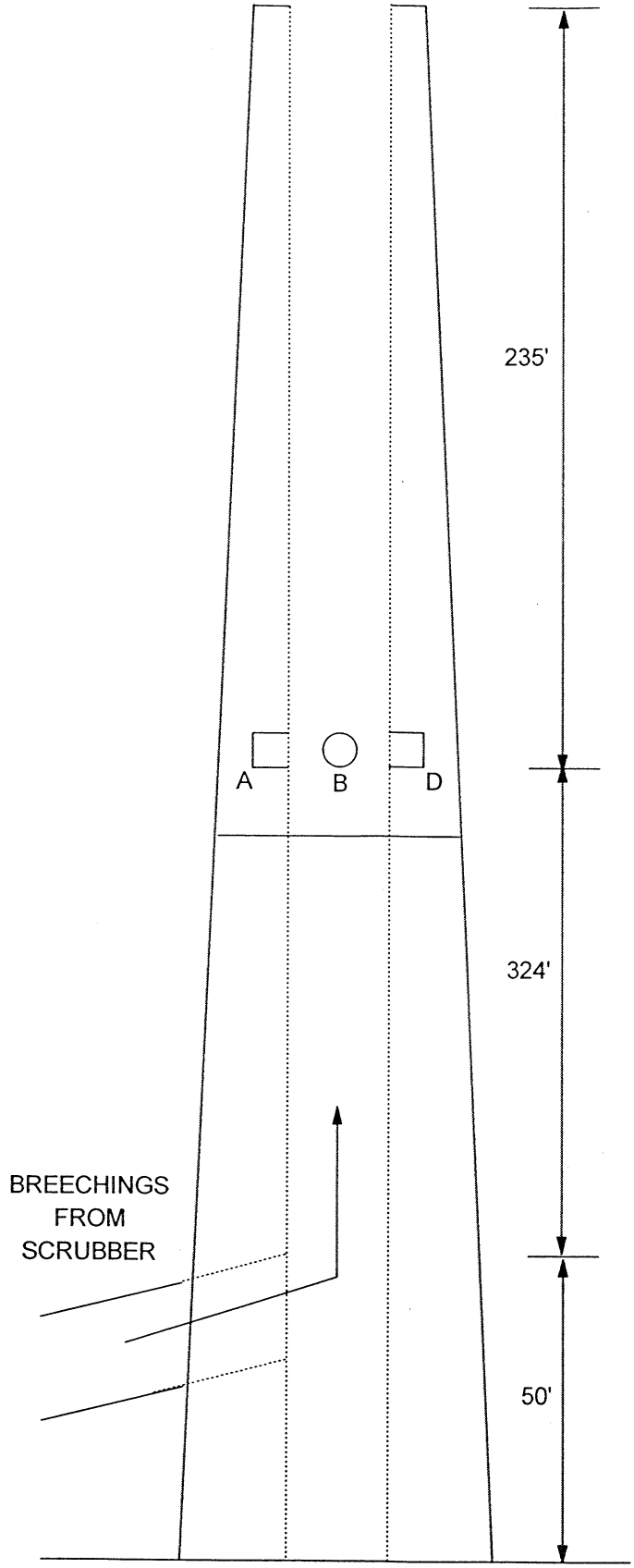

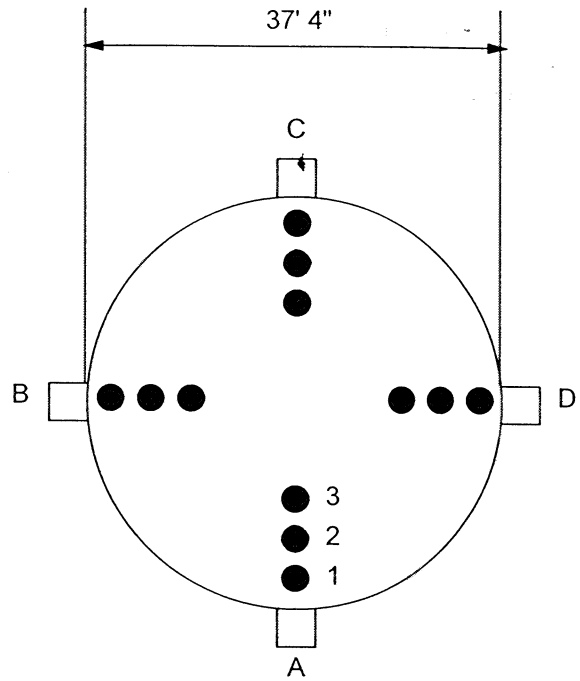

PLAN AT SAMPLING PORT LOCATION

TEST PORT TRAVERSE POINT	DISTANCE FROM INSIDE NEAR WALL (INCHES)
A,B,C,D - 1	19 3/4
2	65 1/2
3	132 5/8

PORT LENGTH = 21 IN.

DRAWING NOT TO SCALE

FIGURE 2-9
UNIT 4 STACK TEST SITE
PORT AND TRAVERSE POINT LOCATIONS

D:\Freelance Drawings\Unit2 stack test site.prz

3. SUMMARY AND DISCUSSION OF TEST RESULTS

3.1 TEST PROGRAM OBJECTIVES

The specific objectives of this test program are restated in this section and are as follows:

- Characterize the emissions of particulate-bound, elemental and oxidized mercury from the three coal fired boilers.
- Simultaneously measure concentrations and mass rates of speciated mercury at the inlet and outlet of the control device on each of the three coal fired boilers.
- Obtain and analyze representative samples of the coal, baghouse ash and scrubber liquid streams for the purpose of determining mercury levels and to establish a material balance for mercury. Ash samples of the Unit 4 electrostatic precipitator (ESP) which is part of the Unit 4 stack reheat system were also collected and analyzed.
- Obtain and analyze representative samples of the coal for the purpose of determining heating value, ash content, sulfur and chlorine levels.
- Determine the carbon content of the ash streams.
- Perform mercury measurements using two mercury CEMS in conjunction with mercury testing at the outlet on each of the three units.
- Document corresponding boiler, baghouse and scrubber operations along with facility CEMS data.

3.2 SAMPLING/TESTING, ANALYTICAL AND QC MATRICES

The detailed sampling/testing, analytical and QC matrices for this survey are presented on Tables 3-1, 3-2, 3-3, and 3-4 for the coal, ash, scrubber solids and liquid, and flue gas sampling locations, respectively. Each table specifies the following components:

- Sampling point identification and description.
- Test objective, number and length of test runs performed, and samples/data collected.
- Parameters measured.

Table 3-1
Sampling/Testing, Analytical, and QC Plan
Units 2, 3 and 4 – Clean Coal Feed

No. of Test Runs: 3 per unit
Test Objective: Perform a material characterization/balance for mercury
Sampling Objective: Collect a representative sample.

Parameters Determined	Mercury	Chlorine	Heating Value	Ultimate/Proximate Analysis	Sulfur	Major Ash Elements	Mass flow Rate
Sampling or Monitoring Method:	Representative sample increments were obtained from the individual boiler coal feed tubes every 20 minutes (alternating tubes) using the ASTM D-197 pulverized coal sampling procedure. Samples stored in air-tight, plastic-lined bucket						Gravimetric feeder readings recorded in control room
Sample Preparation/Extraction and Analysis Method(s):	Proposed ASTM Method	ASTM E776 and EPA Method 300	ASTM D 1989-91 (calorimeter)	ASTM D-5373 C/H/N; ASTM D 5142-90	ASTM D 4239-85	ASTM D3682-78 ICP-AES	
Maximum Holding Time (days):	28	28	28	28	28	28	NA
Sampling or Monitoring Design:							
Total No. of Samples	9	9	9	9	9	9	NA
Site Blanks	0	0	0	0	0	0	NA
Trip Blanks	0	0	0	0	0	0	NA
Lab Blanks	0	0	0	0	0	0	NA
Blank Spikes[2]	0	0	0	0	0	0	NA
Replicates[3]	All samples	All samples	All samples	All samples	All samples	All Samples	NA
QC Spikes[4]	1/batch[1]	1/batch	1/batch	1/batch	1/batch	1/batch	NA
Approximate No. of Samples Analyzed	16	16	16	16	16	16	NA
Analytical Laboratory:	CONSOL	CONSOL	CONSOL	CONSOL	CONSOL	CONSOL	NA

Notes: [1]A batch consists of a maximum of 20 samples.
[2]A blank spike (or method spike) is a sample of reagent-grade water spiked with the analyte(s) of interest that is prepared and analyzed with the associated sample batch.
[3]This indicates that a duplicate analysis is made on one or more samples as a QC mechanism to measure analytical precision.
[4]A sample of similar matrix is spiked with a known amount of the analyte(s) of interest to determine percent recovery.

Table 3-2

Sampling/Testing, Analytical, and QC Plan Units 2, 3 and 4 — Baghouse or ESP Ash and Scrubber Solid Samples

No. of Test Runs: 3 per unit
Test Objective: Perform a material characterization/balance for mercury.
Sampling Objective: Collect a representative sample.

Parameters Determined	Mercury	Carbon	Major Ash Elements
Sampling or Monitoring Method	A detailed description of the sampling procedure is provided in Section 2.		
Sample Preparation/Extraction and Analysis Method(s):	Proposed ASTM Method	ASTM 5373	ICP-AES
Maximum Holding Time (days):	28	28	28
Sampling or Monitoring Design:			
Total No. of Samples	3 per unit per stream	3 per unit per stream	3 per unit per stream
Site Blanks	0	0	0
Trip Blanks	0	0	0
Lab Blanks	0	0	0
Blank Spikes[2]	0	0	0
Replicates[3]	All samples	All samples	All Samples
QC Spikes[4]	1/batch[1]	1/batch	1/batch
Approximate No. of Samples Analyzed	7 for Units 2 and 3; 13 for Unit 4	7 for Units 2 and 3; 13 for Unit 4	7 for Units 2 and 3; 13 for Unit 4
Analytical Laboratory:	CONSOL	CONSOL	CONSOL

Notes: [1] A batch consists of a maximum of 20 samples.
[2] A blank spike (or method spike) is a sample of reagent-grade water spiked with the analyte(s) of interest that is prepared and analyzed with the associated sample batch.
[3] This indicates that a duplicate analysis is made on one or more samples as a QC mechanism to measure analytical precision.
[4] A sample of similar matrix is spiked with a known amount of analyte(s) of interest to determine percent recovery.
[5] The ph of each liquid sample was measured onsite by CONSOL using EPA method 200 procedures.

Table 3-3

Sampling/Testing, Analytical, and QC Plan
Units 3 and 4 — Scrubber Overspray and Discharge Samples

No. of Test Runs: 3 per unit
Test Objective: Perform a material characterization/balance for mercury.
Sampling Objective: Collect a representative sample.

Parameters Determined	Mercury	Major Ash Elements
Sampling or Monitoring Method	A detailed description of the sampling procedure is provided in Section 2	
Sample Preparation/Extraction and Analysis Method(s):	Proposed ASTM Method	ICP-AES
Maximum Holding Time (days):	28	28
Sampling or Monitoring Design:		
Total No. of Samples	3 per unit per stream	3 per unit per stream
Site Blanks	0	0
Trip Blanks	0	0
Lab Blanks	0	0
Blank Spikes[2]	0	0
Replicates[3]	All samples	All Samples
QC Spikes[4]	1/batch[1]	1/batch
Approximate No. of Samples Analyzed[5]	13 per unit	13 per unit
Analytical Laboratory:	CONSOL	CONSOL

Notes:
[1] A batch consists of a maximum of 20 samples.
[2] A blank spike (or method spike) is a sample of reagent-grade water spiked with the analyte(s) of interest that is prepared and analyzed with the associated sample batch.
[3] This indicates that a duplicate analysis is made on one or more samples as a QC mechanism to measure analytical precision.
[4] A sample of similar matrix is spiked with a known amount of analyte(s) of interest to determine percent recovery.
[5] The ph of each liquid sample was measured onsite by CONSOL.

Table 3-4

Sampling/Testing, Analytical, and QC Plan
Units 2, 3 and 4 – Baghouse or Scrubber Inlet and Outlet

No. of Test Runs: 3 per unit
Test Objective: Perform a material characterization/balance and mercury speciation.
Sampling Objective: Collect a representative sample.

Parameters Determined:	Speciated Mercury	Total Mercury
Sampling or Monitoring and Preservation Method(s)	Ontario Hydro	CEM Analyzers[1]
Sample Preparation/Extraction and Analysis Method(s):	Ontario Hydro	NA
Maximum Holding Time (days):	28	NA
Sampling or Monitoring Design:		
Length of Test:	$\geq$ 120 min	$\geq$ 120 min
Sample Size	$\geq$ 2.0 m^3 [2]	NA
Total No. of Samples	3 at inlet and outlet	3 at outlet of each Unit
Site/Reagent Blanks	Minimum of 1 per sample type	NA
Train Blanks	1 per test location (total of 6)	NA
Lab Blanks	1 per batch[3]	NA
Blank Spike Audit[4]	1 per day	NA
Blank Spikes[5]	1 per batch	NA
Replicates[6]	all samples	NA
QC spikes[7]	1 per batch	NA
Approximate No. of Samples Analyzed[8]	~200	9
Analytical Laboratory:	EERC	NA

1 Mercury CEMS at Outlet.
2 Sample volume at inlet may be lower due to high particulate loading resulting in smaller nozzle sizes and lower samples rates.
3 A batch consists of a maximum of 10 samples.
4 A blank spike audit sample is independently prepared and unknown to the analyst.
5 A blank spike (or method spike) is a sample of reagent-grade water spiked with the analyte(s) of interest that is prepared and analyzed with the associated
6 This indicates that a duplicate or triplicate analysis is made on one or more samples as a QC mechanism to measure analytical precision.
7 A sample of similar matrix is spiked with a know amount of the analyte(s) of interest to determine percent recovery.
8 Approximate number of total samples and individual fractions, duplicates and other QC samples.

Note: The facility CEMS measured sulfur dioxide (SO_2), oxides of nitrogen (NO_x), carbon dioxide (CO_2) and flow on the combined Units 1, 2 and 3 stack. On the Unit 4 stack, the facility CEMS measured SO_2, NO_x, CO_2, flow and temperature.

- Sampling or monitoring methods employed, including sample preservation technique. Maximum sample holding time.
- Sample preparation/extraction and analysis methods applied.
- Sampling and analytical program design (i.e., number of samples collected/analyzed by type and method). This includes the number, or frequency and type, of QC samples analyzed for each parameter.
- Laboratory that analyzed each type of sample.

3.3 PRESENTATION OF RESULTS

3.3.1 Mercury Speciation Test Results

A summary of the Ontario Hydro method mercury speciation test results are presented on Tables 3-5, 3-6, 3-7 and 3-8 for Units 2, 3, and 4, respectively.

Table 3-5 presents the measured mercury concentrations in micrograms per cubic meter (ug/m^3) for each test run and provides the percent of particulate, oxidized and elemental mercury in comparison to the total mercury.

Tables 3-6, 3-7, and 3-8 presents the mercury concentrations and mass rate values for particulate, oxidized, elemental and total mercury for each individual test run along with the measured volumetric flow rates. Average values with the standard deviation (SDEV) and percent relative standard deviation (% RSD) have been calculated and are presented.

3.3.1.1 Unit 2

For Unit 2 baghouse inlet an average of 35% of the total mercury measured is particulate bound mercury. On average the oxidized mercury was 27 percent of the total and the elemental mercury was approximately 38 percent of the total mercury collected. At the Unit 2 baghouse outlet, oxidized mercury comprised the highest of the total at 76 percent. The elemented mercury was 22 percent of the total and the particulate bound mercury was less than two percent.

TABLE 3-5
COMPARISON OF MERCURY SPECIATION TO TOTAL MERCURY RESULTS
UNITS 2, 3 AND 4

Mercury Species	Unit 2 Inlet						
	Run 1		Run 2		Run 3		Average
	(ug/m3)	% of Total	(ug/m3)	% of Total	(ug/m3)	% of Total	% of Total
Particulate Bound Mercury Emissions	2.29	44.67	1.58	42.19	0.67	18.37	35.08
Oxidized Mercury Emissions	1.51	29.44	1.00	26.67	0.93	25.76	27.29
Elemental Mercury Emissions	1.33	25.89	1.16	31.14	2.02	55.87	37.63
Total Mercury Emissions	5.13	100.00	3.74	100.00	3.62	100.00	100.00

Mercury Species	Unit 2 Outlet						
	Run 1		Run 2		Run 3		Average
	(ug/m3)	% of Total	(ug/m3)	% of Total	(ug/m3)	% of Total	% of Total
Particulate Bound Mercury Emissions	0.06	5.01	0.003	0.61	< 0.001	0.00	1.87
Oxidized Mercury Emissions	1.01	85.66	0.27	59.41	0.45	82.87	75.98
Elemental Mercury Emissions	0.11	9.33	0.18	39.98	0.09	17.13	22.15
Total Mercury Emissions	1.17	100.00	0.45	100.00	0.54	100.00	100.00

Mercury Species	Unit 3 Inlet						
	Run 1		Run 2		Run 3		Average
	(ug/m3)	% of Total	(ug/m3)	% of Total	(ug/m3)	% of Total	% of Total
Particulate Bound Mercury Emissions	0.01	0.23	< 0.02	0.00	0.05	0.99	0.41
Oxidized Mercury Emissions	0.22	3.94	0.27	5.02	0.53	10.55	6.50
Elemental Mercury Emissions	5.25	95.84	5.20	94.98	4.49	88.47	93.09
Total Mercury Emissions	5.48	100.00	5.47	100.00	5.07	100.00	100.00

Mercury Species	Unit 3 Outlet						
	Run 1		Run 2		Run 3		Average
	(ug/m3)	% of Total	(ug/m3)	% of Total	(ug/m3)	% of Total	% of Total
Particulate Bound Mercury Emissions	0.002	0.04	< 0.001	0.00	0.002	0.04	0.02
Oxidized Mercury Emissions	0.04	0.79	0.05	1.15	0.05	1.07	1.00
Elemental Mercury Emissions	4.85	99.17	4.37	98.85	4.38	98.90	98.97
Total Mercury Emissions	4.89	100.00	4.42	100.00	4.42	100.00	100.00

Note: Non-detect values are not included in the Total Mercury Emissions values. Therefore, the "% of Total" values for non-detects are presented as zeros.

TABLE 3-5 (cont.)
COMPARISON OF MERCURY SPECIATION TO TOTAL MERCURY RESULTS
UNITS NO. 2, 3 AND 4

Mercury Species	Unit 4 Inlet						
	Run 1		Run 2		Run 3		Average
	(ug/m3)	% of Total	(ug/m3)	% of Total	(ug/m3)	% of Total	% of Total
Particulate Bound Mercury Emissions	0.09	1.85	2.62	54.10	2.41	61.53	39.16
Oxidized Mercury Emissions	0.28	6.01	0.94	19.32	0.48	12.29	12.54
Elemental Mercury Emissions	4.32	92.14	1.29	26.58	1.02	26.18	48.30
Total Mercury Emissions	4.69	100.00	4.85	100.00	3.91	100.00	100.00

Mercury Species	Unit 4 Outlet						
	Run 1		Run 2		Run 3		Average
	(ug/m3)	% of Total	(ug/m3)	% of Total	(ug/m3)	% of Total	% of Total
Particulate Bound Mercury Emissions	0.021	0.42	0.170	3.04	0.233	4.34	2.60
Oxidized Mercury Emissions	0.09	1.91	0.38	6.77	0.49	9.07	5.92
Elemental Mercury Emissions	4.85	97.68	5.04	90.19	4.64	86.59	91.48
Total Mercury Emissions	4.97	100.00	5.59	100.00	5.36	100.00	100.00

Note: Non-detect values are not included in the Total Mercury Emissions values. Therefore, the "% of Total" values for non-detects are presented as zeros.

TABLE 3-6
SUMMARY OF MERCURY SPECIATION TEST RESULTS
UNIT NO. 2

TEST DATA:												
Test run number	1	2	3				1	2	3			
Location		Unit 2 Inlet						Unit 2 Outlet				
Test date	3/23/00	3/24/00	3/24/00				3/23/00	3/24/00	3/24/00			
Test time period	1245-1508	0820-1040	1230-1445				1245-1507	0821-1038	1230-1444			
PROCESS DATA:				AVERAGE	STDEV	%RSD				AVERAGE	STDEV	%RSD
Unit Load, MW	56.5	56.7	56.7	**56.6**	**0.1**	**0.2**	56.5	56.7	56.7	**56.6**	**0.1**	**0.2**
Coal feed rate, lb/hr.	64,520	64,760	64,760	**64,680**	**138.6**	**0.2**	64,520	64,760	64,760	**64,680**	**138.6**	**0.2**
Coal Btu content, Btu/lb.(as received)	8,924	8,884	8,906	**8,905**	**20.0**	**0.2**	8,924	8,884	8,906	**8,905**	**20.0**	**0.2**
Heat Input, 10^6 Btu/hr (Avg. F-Factor)	623.4	579.3	572.0	**591.6**	**27.8**	**4.7**	623.4	579.3	572.0	**591.6**	**27.8**	**4.7**
GAS STREAM VELOCITY AND VOLUMETRIC FLOW DATA:												
Avg. temperature, deg. F	354	343	347	**348**	**5.51**	**1.6**	336	331	335	**334**	**2.54**	**0.8**
Avg. gas stream velocity, ft./sec.	41.8	46.6	44.5	**44.3**	**2.5**	**5.5**	45.7	44.4	44.4	**44.8**	**0.8**	**1.7**
Avg. gas stream volumetric flow, wacf/min.	261,800	292,500	279,000	**277,800**	**15,387**	**5.5**	274,100	266,200	266,100	**268,800**	**4,590**	**1.7**
Avg. gas stream volumetric flow, dscf/min.(1)	141,600	158,000	147,800	**149,100**	**8,281**	**5.6**	148,600	143,100	140,400	**144,000**	**4,179**	**2.9**
PARTICULATE BOUND MERCURY EMISSIONS:												
Conc., ug/m^3	2.29	1.58	0.67	**1.51**	**0.81**	**53.9**	0.059	0.003	< 0.001	**0.03**	**0.03**	**106.9**
Conc., ug/Nm^3 (2)	2.46	1.69	0.71	**1.62**	**0.87**	**53.9**	0.063	0.003	< 0.001	**0.03**	**0.04**	**106.9**
Emission rate, lbs/10^{12} Btu.	1.95	1.61	0.64	**1.40**	**0.68**	**48.3**	0.053	0.003	< 0.001	**0.03**	**0.03**	**106.6**
Emission rate, lbs/hr.	1.21E-03	9.33E-04	3.68E-04	**8.39E-04**	**4.31E-04**	**51.4**	3.28E-05	1.46E-06	< 5.28E-07	**1.71E-05**	**1.84E-05**	**107.2**
OXIDIZED MERCURY EMISSIONS:												
Conc., ug/m^3	1.51	1.00	0.93	**1.15**	**0.32**	**27.5**	1.01	0.27	0.45	**0.57**	**0.39**	**67.2**
Conc., ug/Nm^3 (2)	1.62	1.07	1.00	**1.23**	**0.34**	**27.5**	1.08	0.29	0.48	**0.62**	**0.41**	**67.2**
Emission rate, lbs/10^{12} Btu.	1.28	1.02	0.90	**1.07**	**0.20**	**18.3**	0.90	0.25	0.41	**0.52**	**0.34**	**65.3**
Emission rate, lbs/hr.	8.00E-04	5.90E-04	5.17E-04	**6.36E-04**	**1.47E-04**	**23.2**	5.60E-04	1.42E-04	2.36E-04	**3.13E-04**	**2.19E-04**	**70.0**
ELEMENTAL MERCURY EMISSIONS:												
Conc., ug/m^3	1.33	1.16	2.02	**1.51**	**0.46**	**30.4**	0.11	0.18	0.09	**0.13**	**0.05**	**35.9**
Conc., ug/Nm^3 (2)	1.42	1.25	2.17	**1.61**	**0.49**	**30.4**	0.12	0.19	0.10	**0.14**	**0.05**	**35.9**
Emission rate, lbs/10^{12} Btu.	1.13	1.19	1.96	**1.43**	**0.46**	**32.5**	0.10	0.17	0.09	**0.12**	**0.04**	**37.0**
Emission rate, lbs/hr.	7.04E-04	6.89E-04	1.12E-03	**8.38E-04**	**2.45E-04**	**29.2**	6.10E-05	9.58E-05	4.89E-05	**6.86E-05**	**2.44E-05**	**35.6**
TOTAL MERCURY EMISSIONS:												
Conc., ug/m^3	5.13	3.74	3.62	**4.16**	**0.84**	**20.1**	1.17	0.45	0.54	**0.72**	**0.40**	**54.8**
Conc., ug/Nm^3 (2)	5.50	4.01	3.89	**4.47**	**0.90**	**20.1**	1.26	0.48	0.58	**0.77**	**0.42**	**54.8**
Emission rate, lbs/10^{12} Btu.	4.36	3.82	3.51	**3.90**	**0.43**	**11.1**	1.05	0.41	0.50	**0.65**	**0.34**	**52.7**
Emission rate, lbs/hr.	2.72E-03	2.21E-03	2.01E-03	**2.31E-03**	**3.67E-04**	**15.9**	6.54E-04	2.40E-04	2.85E-04	**3.93E-04**	**2.27E-04**	**57.8**
TOTAL MERCURY REMOVAL EFFICIENCY:							77%	91%	89%	**86%**	**0.08**	**9.0**

(1) Standard conditions = 68 deg. F. (20 deg. C.) and 29.92 inches Hg (760mm Hg).

(2) Nm3 = Normal cubic meter (32 deg. F. (0 deg. C.) and 29.92 inches Hg (760mm Hg)).

TABLE 3-7
SUMMARY OF MERCURY SPECIATION TEST RESULTS
UNIT NO. 3

TEST DATA:													
Test run number	1		2	3				1		2	3		
Location			Unit 3 Inlet							Unit 3 Outlet			
Test date	3/21/00		3/21/00	3/22/00				3/21/00		3/21/00	3/22/00		
Test time period	0902-1205		1515-1759	0835-1111				0903-1200		1516-1756	0836-1112		
PROCESS DATA:					AVERAGE	STDEV	%RSD					AVERAGE	STDEV	%RSD
Unit Load, MW	338.0		333.0	334.0	335.0	2.6	0.8	338.0		333.0	334.0	335.0	2.6	0.8
Coal feed rate, lb/hr.	374,260		368,400	369,200	370,620	3177.6	0.9	374,260		368,400	369,200	370,620	3,177.6	0.9
Coal Btu content, Btu/lb.(as received)	8,921		8,641	8,644	8,735	160.8	1.8	8,921		8,641	8,644	8,735	160.8	1.8
Heat Input, 10^6 Btu/hr (Avg. F-Factor)	4217.6		4201.9	4073.3	4164.3	79.2	1.9	4217.6		4201.9	4073.3	4164.3	79.2	1.9
GAS STREAM VELOCITY AND VOLUMETRIC FLOW DATA:														
Avg. temperature, deg. F	.283		299	292	291	8.20	2.8	124		123	123	124	0.53	0.4
Avg. gas stream velocity, ft./sec.	22.8		23.7	22.7	23.1	0.6	2.5	35.0		35.9	35.4	35.5	0.5	1.4
Avg. gas stream volumetric flow, wacf/min.	1,573,900		1,637,100	1,565,200	1,592,100	39,242	2.5	--		--	--	--	--	--
Avg. gas stream volumetric flow, dscf/min.(1)(3)	920,900		918,700	899,700	913,100	11,657	1.3	958,000		982,000	975,700	971,900	12,443	1.3
PARTICULATE BOUND MERCURY EMISSIONS:														
Conc., ug/m^3	0.01	<	0.02	0.05	0.03	0.02	66.3	0.002	<	0.001	0.002	0.002	0.00	27.6
Conc., ug/Nm^3 (2)	0.01	<	0.02	0.05	0.03	0.02	66.3	0.002	<	0.001	0.002	0.002	0.00	27.6
Emission rate, lbs/10^{12} Btu.	0.01	<	0.01	0.04	0.03	0.02	66.8	0.002	<	0.001	0.001	0.001	0.00	27.1
Emission rate, lbs/hr.	4.34E-05	<	5.47E-05	1.69E-04	1.06E-04	6.95E-05	65.4	6.38E-06	<	3.29E-06	5.76E-06	6.07E-06	1.64E-06	27.0
OXIDIZED MERCURY EMISSIONS:														
Conc., ug/m^3	0.22		0.27	0.53	0.34	0.17	49.7	0.04		0.05	0.05	0.05	0.01	13.7
Conc., ug/Nm^3 (2)	0.23		0.29	0.57	0.37	0.18	49.7	0.04		0.05	0.05	0.05	0.01	13.7
Emission rate, lbs/10^{12} Btu.	0.18		0.23	0.44	0.28	0.14	50.4	0.03		0.04	0.04	0.04	0.01	15.5
Emission rate, lbs/hr.	7.44E-04		9.46E-04	1.80E-03	1.16E-03	5.62E-04	48.3	1.38E-04		1.86E-04	1.73E-04	1.66E-04	2.47E-05	14.9
ELEMENTAL MERCURY EMISSIONS:														
Conc., ug/m^3	5.25		5.20	4.49	4.98	0.43	8.6	4.85		4.37	4.38	4.53	0.28	6.1
Conc., ug/Nm^3 (2)	5.63		5.57	4.81	5.34	0.46	8.6	5.20		4.68	4.69	4.86	0.30	6.1
Emission rate, lbs/10^{12} Btu.	4.29		4.25	3.71	4.09	0.33	8.0	4.13		3.82	3.93	3.96	0.15	3.9
Emission rate, lbs/hr.	1.81E-02		1.79E-02	1.51E-02	1.70E-02	1.66E-03	9.8	1.74E-02		1.61E-02	1.60E-02	1.65E-02	7.94E-04	4.8
TOTAL MERCURY EMISSIONS:														
Conc., ug/m^3	5.48		5.47	5.07	5.34	0.23	4.4	4.89		4.42	4.42	4.58	0.27	5.9
Conc., ug/Nm^3 (2)	5.88		5.87	5.44	5.73	0.25	4.4	5.25		4.74	4.75	4.91	0.29	5.9
Emission rate, lbs/10^{12} Btu.	4.48		4.48	4.20	4.38	0.16	3.7	4.16		3.87	3.97	4.00	0.15	3.7
Emission rate, lbs/hr.	1.89E-02		1.88E-02	1.71E-02	1.83E-02	1.02E-03	5.6	1.75E-02		1.62E-02	1.62E-02	1.67E-02	7.73E-04	4.6
TOTAL MERCURY REMOVAL EFFICIENCY:								11%		19%	19%	16%	4.94E-02	30.1

(1) Standard conditions = 68 deg. F. (20 deg. C.) and 29.92 inches Hg (760mm Hg).

(2) Nm3 = Normal cubic meter (32 deg. F. (0 deg. C.) and 29.92 inches Hg (760mm Hg)).

(3) The reported outlet volumetric flow is the measured volumetric flow of the corresponding test run on the Unit 3 inlet corrected for O_2 measured at the outlet location. Actual cubic feet per minute flowrate for the outlet is not reported.

TABLE 3-8
SUMMARY OF MERCURY SPECIATION TEST RESULTS
UNIT NO. 4

TEST DATA:												
Test run number	1	2	3				1	2	3			
Location		Unit 4 Inlet						Unit 4 Outlet				
Test date	3/27/00	3/28/00	3/28/00				3/27/00	3/28/00	3/28/00			
Test time period	1700-2047	0837-1202	1328-1658				1700-2046	0837-1200	1325-1658			
PROCESS DATA:				AVERAGE	STDEV	%RSD				AVERAGE	STDEV	%RSD
Unit Load, MW	540.0	540.0	540.0	**540.0**	**0.0**	**0.0**	540.0	540.0	540.0	**540.0**	**0.0**	**0.0**
Coal feed rate, lb/hr.	589,240	589,400	589,400	**589,347**	**92.4**	**0.0**	589,240	589,400	589,400	**589,347**	**92.4**	**0.0**
Coal Btu content, Btu/lb.(as received)	8,851	8,989	8,916	**8,919**	**69.0**	**0.8**	8,851	8,989	8,916	**8,919**	**69.0**	**0.8**
Heat Input, 10^6 Btu/hr (Avg. F-Factor)	5928.0	5834.0	5588.0	**5783.3**	**175.6**	**3.0**	5928.0	5834.0	5588.0	**5783.3**	**175.6**	**3.0**
GAS STREAM VELOCITY AND VOLUMETRIC FLOW DATA:												
Avg. temperature, deg. F	310	286	277	**291**	**16.87**	**5.8**	153	154	157	**154**	**1.81**	**1.2**
Avg. gas stream velocity, ft./sec.	75.5	72.2	71.1	**72.9**	**2.3**	**3.1**	28.1	27.8	27.5	**27.8**	**0.3**	**1.1**
Avg. gas stream volumetric flow, wacf/min.	1,203,900	1,151,900	1,133,600	**1,163,100**	**36,471**	**3.1**	1,847,700	1,823,500	1,809,300	**1,826,800**	**19,416**	**1.1**
Avg. gas stream volumetric flow, dscf/min.[1]	667,800	658,400	663,800	**663,300**	**4,717**	**0.7**	--	--	--	--	--	--
Avg. total gas stream outlet volumetric flow, dscf/min. [3]	1,255,800	1,238,900	1,186,500	**1,227,100**	**36,134**	**2.9**	1,289,700	1,284,700	1,266,300	**1,280,200**	**12,323**	**1.0**
PARTICULATE BOUND MERCURY EMISSIONS:												
Conc., ug/m^3	0.09	2.62	2.41	**1.71**	**1.41**	**82.4**	0.02	0.17	0.23	**0.14**	**0.11**	**77.2**
Conc., ug/Nm^3 [2]	0.09	2.82	2.58	**1.83**	**1.51**	**82.4**	0.02	0.18	0.25	**0.15**	**0.12**	**77.2**
Emission rate, lbs/10^{12} Btu.	0.07	2.09	1.92	**1.36**	**1.12**	**82.5**	0.02	0.14	0.20	**0.12**	**0.09**	**78.1**
Emission rate, lbs/hr.	4.07E-04	1.22E-02	1.07E-02	**7.76E-03**	**6.41E-03**	**82.6**	9.96E-05	8.18E-04	1.10E-03	**6.73E-04**	**5.17E-04**	**76.8**
OXIDIZED MERCURY EMISSIONS:												
Conc., ug/m^3	0.28	0.94	0.48	**0.57**	**0.34**	**59.3**	0.09	0.38	0.49	**0.32**	**0.20**	**63.2**
Conc., ug/Nm^3 [2]	0.30	1.01	0.52	**0.61**	**0.36**	**59.3**	0.10	0.41	0.52	**0.34**	**0.22**	**63.2**
Emission rate, lbs/10^{12} Btu.	0.22	0.75	0.38	**0.45**	**0.27**	**59.4**	0.08	0.31	0.41	**0.27**	**0.17**	**64.4**
Emission rate, lbs/hr.	1.32E-03	4.35E-03	2.14E-03	**2.60E-03**	**1.57E-03**	**60.1**	4.58E-04	1.82E-03	2.30E-03	**1.53E-03**	**9.58E-04**	**62.7**
ELEMENTAL MERCURY EMISSIONS:												
Conc., ug/m^3	4.32	1.29	1.02	**2.21**	**1.83**	**82.8**	4.85	5.04	4.64	**4.84**	**0.20**	**4.2**
Conc., ug/Nm^3 [2]	4.63	1.38	1.10	**2.37**	**1.96**	**82.8**	5.20	5.41	4.97	**5.20**	**0.22**	**4.2**
Emission rate, lbs/10^{12} Btu.	3.43	1.03	0.81	**1.76**	**1.45**	**82.6**	3.95	4.16	3.94	**4.02**	**0.12**	**3.1**
Emission rate, lbs/hr.	2.03E-02	5.98E-03	4.55E-03	**1.03E-02**	**8.71E-03**	**84.7**	2.34E-02	2.43E-02	2.20E-02	**2.32E-02**	**1.15E-03**	**4.9**
TOTAL MERCURY EMISSIONS:												
Conc., ug/m^3	4.69	4.85	3.91	**4.48**	**0.50**	**11.2**	4.97	5.59	5.36	**5.30**	**0.32**	**5.9**
Conc., ug/Nm^3 [2]	5.03	5.20	4.20	**4.81**	**0.54**	**11.2**	5.33	6.00	5.75	**5.69**	**0.34**	**5.9**
Emission rate, lbs/10^{12} Btu.	3.72	3.86	3.11	**3.56**	**0.40**	**11.1**	4.05	4.61	4.55	**4.40**	**0.31**	**7.0**
Emission rate, lbs/hr.	2.20E-02	2.25E-02	1.74E-02	**2.06E-02**	**2.83E-03**	**13.7**	2.40E-02	2.69E-02	2.54E-02	**2.54E-02**	**1.46E-03**	**5.7**
TOTAL MERCURY REMOVAL EFFICIENCY:							ND	ND	ND	ND[4]		

(1) Standard conditions = 68 deg. F. (20 deg. C.) and 29.92 inches Hg (760mm Hg). Represents volumetric flow measured on the B duct.

(2) Nm3 = Normal cubic meter (32 deg. F. (0 deg. C.) and 29.92 inches Hg (760mm Hg)).

(3) Total Inlet volumetric flow is from the measured volumetric flow from the isokinetic test run on the Unit 4 inlet B duct and the measured volumetric flow from the Unit 4 Inlet A duct and the ESP Reheat duct.

(4) Not determined

Based on the total mercury measurements the average removal efficiency for the baghouse (based on the measured $\mu g/m^3$) was 86 percent with an average mass emission rate of 0.0004 pound per hour.

The average total mercury emission rates for Unit 2 are 0.72 ug/m^3, 0.65 $lbs/10^{12}$ Btu and 0.0004 lb/hr.

Detailed test data and test results for the Unit 2 baghouse inlet and outlet are provided on Tables A-1 and A-2 in Appendix A.

3.3.1.2 Unit 3

The Unit 3 mercury test results are in sharp contrast to the Unit No. 2 results. For both the Unit No. 3 inlet and outlet most all mercury present is in the form of elemental mercury. On average the level of elemental mercury at the inlet location was 93 percent with 99 percent of the total mercury being in the elemental form at the outlet. The balance of the mercury at the inlet and outlet is oxidized with less than one-half of a percent as particulate bound mercury at the inlet and less the 0.1 % particulate bound at the outlet.

The average total mercury emissions for Unit No. 3 are 4.6 $\mu g/m^3$, 4.0 $lbs/10^{12}$ Btu and 0.017 lb/hr. The average mercury removal efficiency across the scrubber (based on the measured $\mu g/m^3$) was 16%.

Detailed test data and test results for the Unit 3 inlet and outlet are provided on Tables A-3 and A-4 in Appendix A.

3.3.1.3 Unit 4

For both the Unit No. 4 inlet and outlet most all mercury present is in the form of elemental mercury. On average the level of elemental mercury at the inlet location was 48 percent with 91 percent of the total mercury being in the elemental form at the outlet. The balance of mercury at the inlet location is particulate bound at 39% with oxidized at 13%. At the outlet location the oxidized was 6% of the total and the particulate bound was 3%.

It is believed that the particulate bound mercury measured at the Unit 4 inlet location may be bias low. See Subsection 5.1.6 in the Quality Assurance Summary section for additional discussion.

Since the total mercury measured at the Unit 4 scrubber outlet was higher than measured at the inlet, no removals were calculated. The mercury values measured at the Unit 4 scrubber outlet are believed to be representative of the mercury emissions from Unit 4.

The average total mercury emissions for Unit No. 4 are 5.3 $\mu g/m^3$, 4.4 $lbs/10^{12}$ Btu and 0.0254 lb/hr.

Detailed test data and test results for the Unit 4 inlet and outlet are provided on Tables A-5 and A-6 in Appendix A.

3.3.2 Mercury CEMS Comparison Results

For the tests at the Boswell Energy Center, two different mercury analyzers were used. The two analyzers were the Tekran® and the Semtech® Hg 2000. A detailed description of the analyzers is provided in Section 4 of this report.

A comparison of the gas phase mercury concentrations measured in ug/m^3 by the mercury CEMS and gas phase mercury concentrations determined using the Ontario Hydro method sampling data are provided in Figures 3-1 through 3-4 for Units 2, 3, and 4. The instrument data are compared to the Ontario Hydro mercury speciation results.

For the tests at the Boswell Energy Center the pretreatment/conversion system was located at the outlet sampling location for all tests. The sample was then drawn simultaneously to the both the Semtech and Tekran, located in a temperature controlled trailer. Periodically the pretreatment was operated such that the instruments were able to measure speciated gaseous mercury and total mercury.

Although there were times the mercury CEMS were not operating (either intentionally or because of operating problems) the CEMS, particularly the Tekran compared quite favorably with the Ontario Hydro results. The Semtech had substantial amount of data scatter. The

Figure 3-1

Comparison of Mercury CEMS to Ontario Hydro Results

Unit 2 Test Run 1

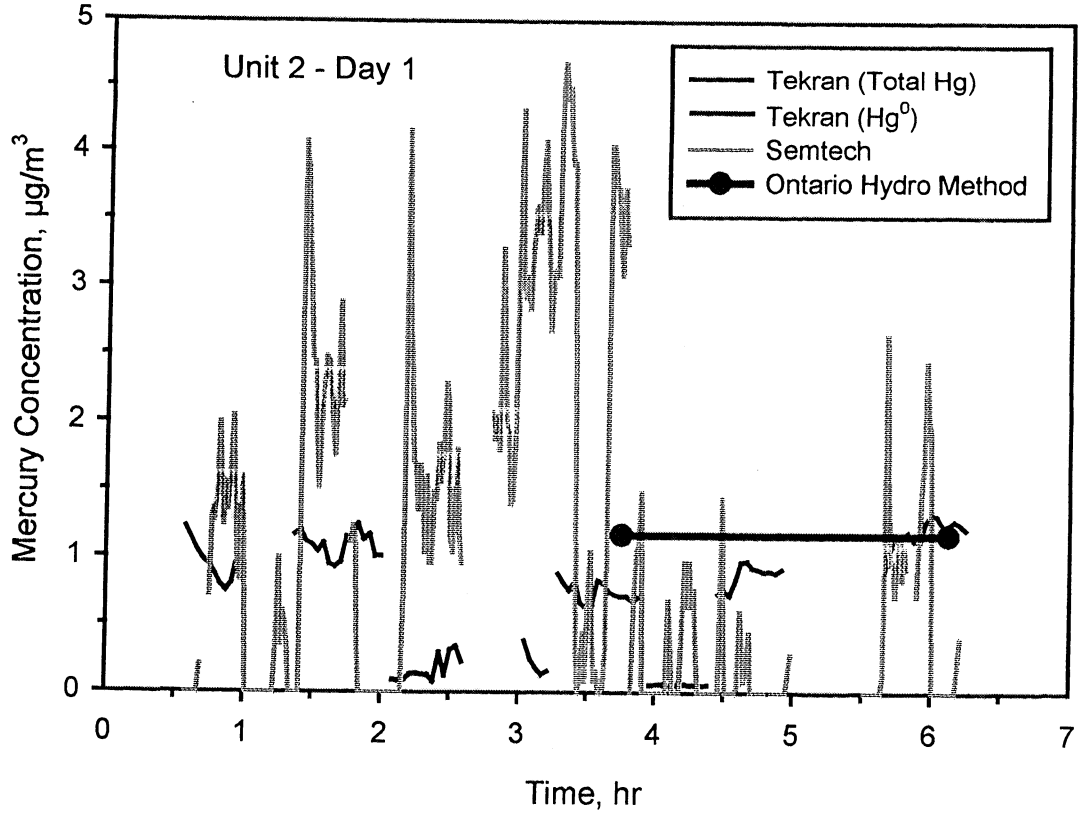

Figure 3-2

Comparison of Mercury CEMS to Ontario Hydro Results

Unit 2 Test Runs 2 and 3

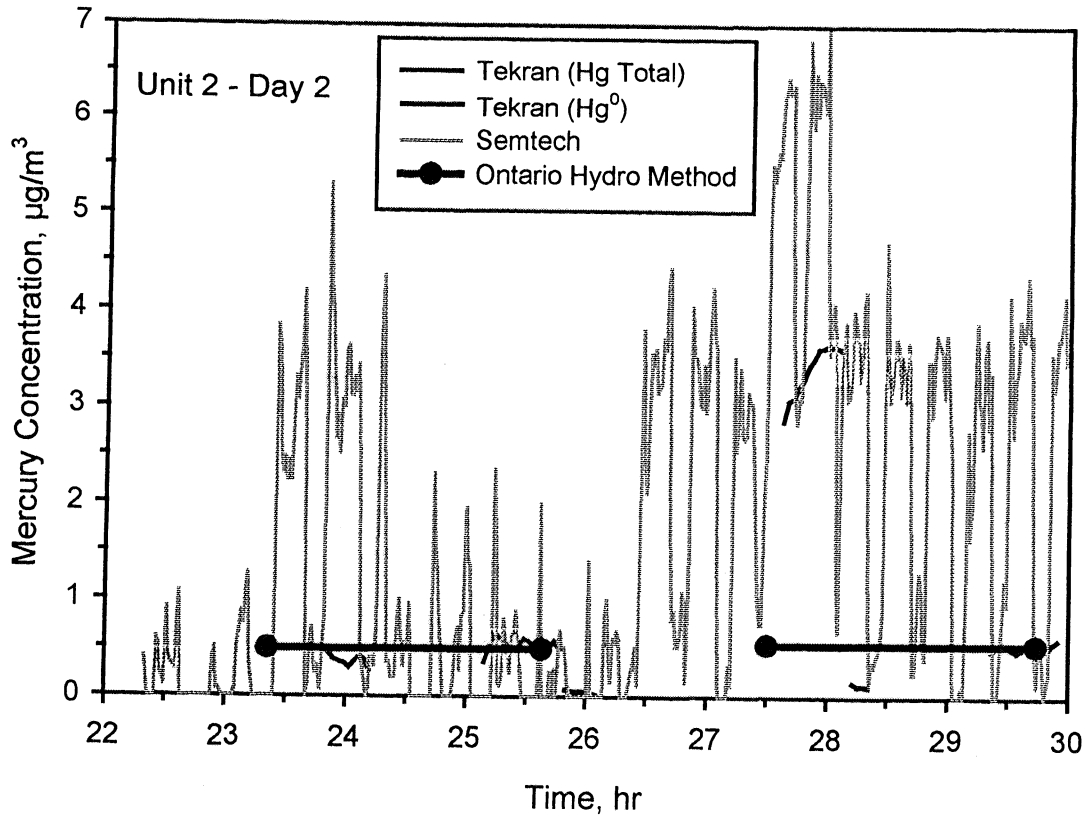

Figure 3-3

Comparison of Mercury CEMS to Ontario Hydro Results

Unit 3

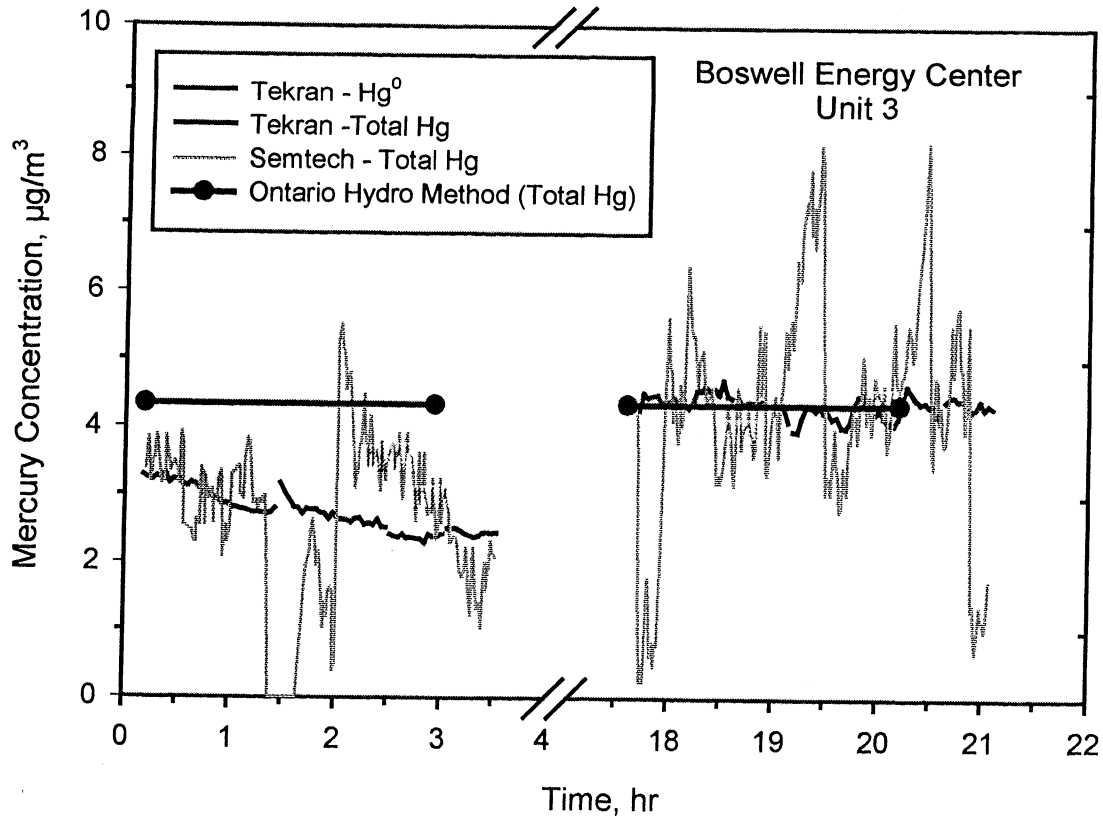

Figure 3-4

Comparison of Mercury CEMS to Ontario Hydro Results

Unit 4

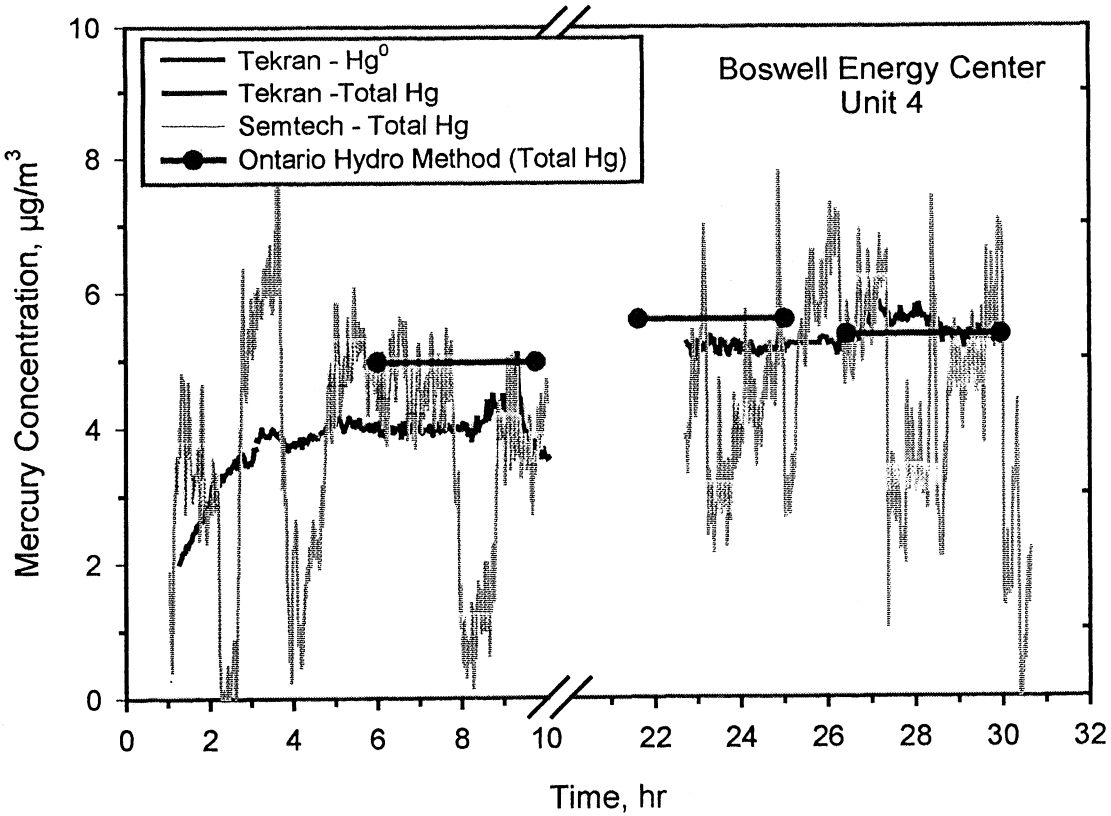

Semtech has been found to operate much better at mercury concentrations >10μg/m^3. The results are shown graphically in Figures 3-1 through 3-4. The instrument data is compared to the three replicate Ontario Hydro mercury speciation samples. The instruments were operated for only two of the three Ontario Hydro method samples on Unit 3. The vapor phase mercury concentration at the outlet of Unit 2 (shown in Figures 3-1 and 3-2) was very low, <2μg/m^3. The Tekran gave similar results as the Ontario Hydro method. However the Semtech was virtually useless at this low concentration. There was a half-hour (27.5 to 28 hour) time period when both the Semtech and the Tekran were reporting mercury concentrations higher than the Ontario Hydro method. The Tekran during that time period measured about 3.5μg/m^3 compared to 0.75μg/m^3 for the 2-hour Ontario Hydro sample. There is no explanation for these results. However, after switching to Hg° only mode and then returning to the total mercury mode the results of the Tekran was the same as the Ontario Hydro Method. Both the Tekran and Ontario Hydro method show little Hg°, <0.25 μg/m^3.

The mercury speciation results for Units 3 and 4 were nearly identical. In both cases the Ontario Hydro method measured 4 to 5 μg/m^3 with the mercury being almost all elemental. The Tekran and Semtech both gave comparable results as shown in Figures 3-3 and 3-4. As before the Semtech was much less consistent than the Tekran. The statistical results for the CEMs compared to the Ontario Hydro method for all tests are shown in Table 3-9.

3.3.3 Mercury Material Balance

Mercury material balance closures were calculated for each of the three individual Ontario Hydro measurements completed at the stack locations for Units 2, 3, and 4. A description of the calculation technique and assumptions along with a discussion of the results is contained in this section.

3.3.3.1 Material Balance Procedure

Gas phase mercury measurements are difficult to obtain. Common flue gas Hg concentrations from coal-fired utilities are in the 1 to 10 μg/m^3 ranges. Measurements made with the Ontario Hydro speciation train, typically result in Hg-in-solution concentrations of 1 to 10 μg/L. Because

Table 3-9

Summary of Mercury CEM Results for Units 2, 3 and 4

Test Location	Average Measured Values			
Outlet Unit 2	**Hg^0 µg/m^3**	**SDEV µg/m^3**	**Total Hg µg/m^3**	**SDEV µg/m^3**
Tekran	0.14	0.09	1.04	0.11
Semtech Hg 2000	1.04	1.22	1.32	1.37
Ontario Hydro Method	0.13	0.07	0.72	0.37
Outlet Unit 3				
Tekran	3.50	0.87	3.56	0.83
Semtech Hg 2000	3.05	1.52	4.06	1.38
Ontario Hydro Method	4.53	0.27	4.58	0.26
Stack Unit 4				
Tekran	4.29	0.62	4.45	0.88
Semtech Hg 2000	3.87	1.93	4.00	1.63
Ontario Hydro Method	4.84	0.31	5.30	0.20

of the difficulty of these measurements, material balance calculations provide a useful tool for assessing the accuracy of the flue gas measurements. Mercury material balance closures were calculated for each of the individual flue gas measurements taken during the Boswell Energy Center mercury ICR testing.

The material balance closure is defined as the mass of Hg measured in the output streams divided by the mass of Hg in the input streams. For the units tested, the only Hg input stream was the coal. There were a variety of different output streams depending on the unit tested.

For all tests, the Hg input is calculated from the mercury concentration determined in the as-fired test sample and the coal firing rate determined from the coal's F-factor. The average Hg concentration of the nine coal samples was ~0.060 μg/g (ppm dry basis). This is a very low concentration and carries an inherent measurement variability of ~10% to 15%. This variability must be considered when assessing the overall Hg material balance closures.

The F-factor calculation of the coal firing rate uses the measured flue gas volumetric flow rate (dscfm), the measured gas composition, and the coal quality data. The coal F-factor is defined as the volume of flue gas produced from the combustion of 1 MMBtu of coal. With this information, the coal firing rate can be accurately determined. In many cases, the coal firing rate determined from this method is more accurate than that determined by the plant feeders. For this test program, the coal firing rate for each test was determined by averaging the heat input calculated from both the CO_2-based and the O_2-based F-factors.

The material balance results from the three test units are discussed in the following sections.

3.3.3.2 Discussion of Mercury Material Balance Results

UNIT 2

The average coal firing rate for the three test periods from the F factor calculation was 48,826 lb/hr (dry basis). The average Hg concentration was 0.054 ug/g. This resulted in an average Hg input to the boiler of 20.07 mg/min. The individual coal analysis showed that the Hg concentration of the coal for the first test was higher than that for the other tests. This observation was confirmed from the flue gas Hg measurements. Because of this significant

difference, individual coal Hg concentrations were used in the material balance calculations instead of a three-test average.

Unit 2 utilizes a fabric filter baghouse as the primary pollution control device. The average mercury mass flow rate at the baghouse inlet was 17.02 mg/min. The average Hg material balance closure at the baghouse inlet was 86.2% with the individual closures being 79.5%, 97.0% and 82.2%. The average Hg mass flow rate at the baghouse outlet was 2.97 mg/min. This represents ~14% of the mercury input to the boiler and indicates a total system removal of ~86.1%.

The ash output streams are bottom ash and fly ash. There are no mill rejects for this system. Past Hg analysis conducted on the bottom ash showed insignificant levels of Hg. No bottom ash samples were collected for this test. The baghouse ash samples showed high concentrations of Hg, approaching ~1 ug/g. Using the measured fly ash flow rates, the average Hg mass flow rate in the baghouse ash was 10.93 mg/min. This represents ~60% of Hg input to the boiler and results in an average Hg material balance of 72.5%. A closer inspection of the fly ash loading to the baghouse show both atypical variability and lower than expected results. The three particulate measurements (based on thimble weights from the Ontario Hydro trains) at this location were 1412, 1802, and 1456 lb/hr. These values represent a fly ash partitioning of 38% to 48%. This would be considered atypically low for this type of coal combustion system. Testing conducted by WESTON in 1993 showed that ~60% of the ash reported to the baghouse. Because of this, the Hg material balances were recalculated using a forced fly ash rate of 60%. This resulted in an average fly ash mass flow rate of 2282 lb/hr and a fly ash Hg mass flow rate of 16.02 mg/min. This represents 84% of the Hg input to the boiler. The average Hg material balance closure using the forced fly ash loading percentage of 60% was 98.3% with the individual closures being 78.8%, 114.8%, and 101.2%. These values are believed to be more representative of this system.

The material balances indicate reasonable accuracy of the Hg emissions measured with the Ontario Hydro sampling train. The material balance data also indicate that the baghouse is removing 60% to 85% of the flue gas Hg in comparison to the 86% average removal measured by the Ontario Hydro train.

UNIT 3

The average coal firing rate for the three test periods for Unit 3 using the F factor calculation was 346,085 lb/hr (dry basis). The average Hg concentration was 0.063 ug/g. This resulted in an average Hg input to the boiler of 164.80 mg/min. The individual coal Hg analysis showed little deviation for the three tests. Because of this, the three-test average was used in the material balance calculations.

Unit 3 utilizes a wet particulate scrubber as the primary pollution control device. The average mercury mass flow rate at the particulate scrubber inlet was 138.07 mg/min. The average Hg material balance closure at the baghouse inlet was 83.7% with the individual closures being 85.9%, 85.6% and 79.8%. The average Hg mass flow rate at the particulate scrubber outlet was 125.72 mg/min. This represents ~76% of the mercury input to the boiler and indicates a total system removal of ~24%.

This system has three ash output streams which are mill rejects, bottom ash and fly ash collected in the particulate scrubber. In addition to these, there is one liquid output stream which is the particulate scrubber filtrate. The collected weight of reject material for this system is insignificant to the Hg material balance. Past Hg analysis conducted on bottom ash samples showed insignificant levels of Hg and no bottom ash samples were collected for this test. The particulate scrubber slurry was filtered and Hg analysis was conducted on both the particulate solids (fly ash) and the scrubber filtrate.

The particulate solids mass flow rate was determined by two methods. In the first method, the mass flow rate of solids was assumed to be equal to that of the fly ash loading that was manually measured at the scrubber inlet. This procedure resulted in fly ash loadings of 8673, 10937, and 16892 lb/hr. These loadings represent 32% to 58% of the coal ash. The scrubber slurry filtrate liquid flow rate was obtained from an in-line flow meter. Using the measured fly ash loading, the mass flow rate of the Hg in the solids was 4.33 mg/min (2.6% of total Hg input). The Hg mass flow rate in the filtrate was 36.8 mg/min (22% of total Hg). Adding these Hg outputs to the stack emissions result in an average Hg material balance closure of 101.2% with the individual balances being 109.2%, 96.5%, and 98.0%.

In the second method for determining the fly ash loading to the scrubber, the fly ash loading was forced to equal a 70% overhead partitioning. The calculated fly ash loadings to the scrubber using this technique were 21,460, 23,500, and 24,400 lb/hr. These loadings resulted in an average Hg mass flow rate of 8.75 mg/min (5.3% of total Hg) for the solids. The Hg mass flow rate for the filtrate was unchanged at 36.8 mg/min (22.0% of total). Adding these Hg outputs to the stack emissions result in an average Hg material balance closure of 103.9% with the individual balances being 113.6%, 98.9%, and 99.2%.

The material balances indicate reasonable accuracy of the Hg emissions measured with the Ontario Hydro sampling train. The material balance data also indicate that the particulate scrubber is removing ~24% of the flue gas Hg. The removal efficiency measured using the Ontario Hydro train data is 16%.

UNIT 4

The average coal firing rate for the three test periods for Unit 4 using the F factor calculation was 479,774 lb/hr (dry basis). The average Hg concentration was 0.066 ug/g. This resulted in an average Hg input to the boiler of 239.22 mg/min. The individual coal Hg analysis showed a small deviation for the three tests. Because of this, individual coal Hg concentrations were used in the material balance calculations instead of a three-test average.

This unit utilizes a wet FGD for SO_2 and particulate control. Approximately 5% of the flue gas is bypassed around the FGD and is used for flue gas reheat. A two field ESP is used for particulate removal on this bypass stream. The average mercury mass flow rate at the FGD scrubber inlet was 155.95 mg/min. The average Hg material balance closure at the scrubber inlet was 65.5% with the individual closures being 68.9%, 74.7% and 52%. These closures are low and could indicate a problem with the Hg measurement at this location. The average Hg mass flow rate at the FGD scrubber outlet was 192.23 mg/min. This represents ~80% of the mercury input to the boiler and indicates a total system removal of ~20%.

This system has four solid output streams which are mill rejects, bottom ash, FGD solids, and ESP ash. In addition to these there is one liquid output stream, the FGD scrubber filtrate stream. The collected weight of the reject material for this system is insignificant to the Hg material balance. Past Hg analysis conducted on bottom ash samples showed insignificant levels of Hg

and no bottom ash samples were collected for this test. Mercury analysis was conducted on the ESP ash. The low Hg concentration measured combined with the low mass flow rate of ESP fly ash had no impact on the overall Hg material balances. The FGD scrubber slurry was filtered and Hg analysis was conducted on both the particulate solids (fly ash) and the scrubber filtrate.

The FGD solids were determined by the amount of sulfur removed from the flue gas and the sulfur concentration of the FGD solids. This procedure resulted in FGD solids mass flow rates of 55,017, 65,712, and 65,744 lb/hr. The scrubber slurry filtrate liquid flow rate was calculated from the FGD solids mass rate and % slurry solids. Using this technique, the mass flow rate of the Hg in the FGD solids was 12.52 mg/min (5.2% of total Hg input) and 19.01 mg/min in the filtrate (8.0% of total Hg). Adding these Hg outputs to the stack emissions result in an average Hg material balance closure of 93.9% with the individual balances being 85.8%, 104.4%, and 91.3%.

The material balances indicate reasonable accuracy of the Hg emissions measured with the Ontario Hydro sampling train at the Unit 4 FGD outlet. The data also indicate that the FGD scrubber is removing ~10% to 15% of the flue gas Hg.

3.3.3.3 Overall Summary of Material Balance Data

The Hg material balance closures are reasonable for the emissions levels measured. These balances are within the reproducibility of the measurement methods and help validate the gas phase measurements and reported Hg emissions.

Detailed summaries of the mercury material balances are provided in Appendix A.

3.3.4 Process Solid Sample Stream Results

Tables 3-10 through 3-18 provide a summary of the analytical results obtained on the coal feed ash and scrubber liquid samples collected on Units 2, 3 and 4.

For each parameter measured on the coal, ash and liquid streams, the concentration or percent value is presented for each individual test run along with the average standard deviation and percent relative standard deviation.

Table 3-10
Summary of Process Solid Sample Stream Results
Unit No. 2 Coal Feed Samples
Dry Basis - All Results Percent Unless Noted

Test ID	T-1	T-2	T-3			
Date	3/23/00	3/23/00	3/24/00	AVG	SDEV	PRSD
Volatile Matter	42.81	43.14	43.09	43.01	0.18	0.4%
Ash	7.31	7.97	8.12	7.80	0.43	5.5%
Carbon	70.79	70.12	70.34	70.42	0.34	0.5%
Hydrogen	4.62	4.60	4.60	4.61	0.01	0.3%
Nitrogen	0.99	0.94	1.04	0.99	0.05	5.1%
Sulfur	0.62	0.62	0.68	0.64	0.03	5.4%
Oxygen	15.67	15.75	15.22	15.55	0.29	1.8%
Chlorine	<0.01	<0.01	<0.01	<0.01	<0.01	0%
Mercury, ppm	0.078	0.043	0.049	0.057	0.019	33.0%
Lead, ppm	3.2	4.1	3.6	3.6	0.5	12.4%
Btu/lb	12158	12087	12100	12115	38	0.3%
Total Moisture	26.6	26.5	26.4	26.5	0.1	0.4%
Ash Elements						
SiO2	35.42	36.96	37.85	36.74	1.23	3.3%
Al2O3	16.93	17.01	17.34	17.09	0.22	1.3%
TiO2	0.89	0.92	0.93	0.91	0.02	2.3%
Fe2O3	5.70	5.46	6.22	5.79	0.39	6.7%
CaO	15.41	16.51	15.35	15.76	0.65	4.1%
MgO	4.08	3.98	3.89	3.98	0.10	2.4%
Na2O	3.18	2.51	2.35	2.68	0.44	16.4%
K2O	0.56	0.56	0.62	0.58	0.03	6.0%
P2O5	0.22	0.24	0.25	0.24	0.02	6.5%
SO3	16.49	15.02	14.91	15.47	0.88	5.7%
Undetermined	1.12	0.83	0.29	0.75	0.42	56.4%

Table 3-11
Summary of Process Solid Sample Stream Results
Unit No. 3 Coal Feed Samples
Dry Basis - All Results Percent Unless Noted

Test ID	T-1	T-2	T-3			
Date	3/21/00	3/21/00	3/22/00	AVG	SDEV	PRSD
Volatile Matter	42.64	42.54	42.07	42.42	0.30	0.7%
Ash	7.67	8.13	8.54	8.11	0.44	5.4%
Carbon	70.50	70.35	69.96	70.27	0.28	0.4%
Hydrogen	4.54	4.50	4.39	4.48	0.08	1.7%
Nitrogen	0.99	1.01	0.99	1.00	0.01	1.2%
Sulfur	0.61	0.75	0.68	0.68	0.07	10.3%
Oxygen	15.69	15.26	15.44	15.46	0.22	1.4%
Chlorine	<0.01	<0.01	<0.01	<0.01	<0.01	0%
Mercury, ppm	0.054	0.072	0.063	0.063	0.009	14.3%
Lead, ppm	26.5	5.4	6.9	12.9	11.8	91.0%
Btu/lb	12072	12052	11972	12032	53	0.4%
Total Moisture	26.1	28.3	27.8	27.4	1.2	4.2%
Ash Elements						
SiO2	37.56	36.05	38.89	37.50	1.42	3.8%
Al2O3	17.88	16.98	17.43	17.43	0.45	2.6%
TiO2	0.92	0.91	0.89	0.91	0.02	1.7%
Fe2O3	5.03	6.23	4.82	5.36	0.76	14.2%
CaO	15.17	15.31	14.65	15.04	0.35	2.3%
MgO	4.15	3.97	4.08	4.07	0.09	2.2%
Na2O	1.92	1.80	1.94	1.89	0.08	4.0%
K2O	0.43	0.34	0.32	0.36	0.06	16.1%
P2O5	0.30	0.27	0.25	0.27	0.03	9.2%
SO3	15.83	16.51	15.68	16.01	0.44	2.8%
Undetermined	0.81	1.63	1.05	1.16	0.42	36.2%

Table 3-12
Summary of Process Solid Sample Stream Results
Unit No. 4 Coal Feed Samples
Dry Basis - All Results Percent Unless Noted

Test ID	T-1	T-2	T-3			
Date	3/27/00	3/28/00	3/28/00	AVG	SDEV	PRSD
Volatile Matter	42.93	42.84	42.85	42.87	0.05	0.1%
Ash	7.27	7.44	8.62	7.78	0.74	9.5%
Carbon	70.89	70.96	69.43	70.43	0.86	1.2%
Hydrogen	4.52	4.56	4.38	4.49	0.09	2.1%
Nitrogen	0.94	0.99	1.00	0.98	0.03	3.3%
Sulfur	0.54	0.57	0.60	0.57	0.03	5.3%
Oxygen	15.84	15.48	15.97	15.76	0.25	1.6%
Chlorine	<0.01	<0.01	<0.01	<0.01	<0.01	0%
Mercury, ppm	0.065	0.063	0.070	0.066	0.004	5.5%
Lead, ppm	3.7	3.5	4.1	3.8	0.3	8.1%
Btu/lb	12075	12197	11888	12053	156	1.3%
Total Moisture	26.7	26.3	25.0	26.0	0.9	3.4%
Ash Elements						
SiO2	37.66	40.23	42.57	40.15	2.46	6.1%
Al2O3	18.51	17.96	17.80	18.09	0.37	2.1%
TiO2	0.93	0.93	0.86	0.91	0.04	4.5%
Fe2O3	4.30	4.60	4.27	4.39	0.18	4.2%
CaO	14.69	13.58	12.76	13.68	0.97	7.1%
MgO	4.34	3.75	3.64	3.91	0.38	9.6%
Na2O	2.26	2.30	1.69	2.08	0.34	16.4%
K2O	0.47	0.75	0.78	0.67	0.17	25.6%
P2O5	0.34	0.34	0.31	0.33	0.02	5.2%
SO3	15.31	14.92	14.26	14.83	0.53	3.6%
Undetermined	1.19	0.64	1.06	0.96	0.29	29.8%

Table 3-13
Summary of Process Solid Sample Stream Results
Unit No. 2 Baghouse Ash
Dry Basis - All Results Percent Unless Noted

Test ID	T-1	T-2	T-3			
Date	3/23/00	3/23/00	3/24/00	AVG	SDEV	PRSD
Ash	98.41	98.63	99.05	98.70	0.33	0.3%
Carbon	1.31	1.08	0.70	1.03	0.31	29.9%
Sulfur	0.88	0.87	0.80	0.85	0.04	5.1%
Mercury, ppm	0.967	0.928	0.893	0.929	0.037	4.0%
Total Moisture	0.10	0.06	0.07	0.08	0.02	27.2%
Ash Elements						
SiO2	42.78	41.86	40.99	41.88	0.90	2.1%
Al2O3	20.29	20.57	20.96	20.61	0.34	1.6%
TiO2	1.00	0.98	1.00	0.99	0.01	1.2%
Fe2O3	5.93	5.37	5.08	5.46	0.43	7.9%
CaO	17.06	18.20	18.78	18.01	0.88	4.9%
MgO	4.41	4.58	4.74	4.58	0.17	3.6%
Na2O	3.03	2.96	3.03	3.01	0.04	1.3%
K2O	0.67	0.71	0.70	0.69	0.02	3.0%
P2O5	0.33	0.34	0.33	0.33	0.01	1.7%
SO3	2.19	2.17	1.99	2.12	0.11	5.2%
Undetermined	2.31	2.26	2.40	2.32	0.07	3.1%

Table 3-14
Summary of Process Liquid Sample Stream Results

Unit No. 3 Scrubber Overspray Water
all results are mg/L (ppm) unless noted

Test ID	T-1	T-2	T-3			
Date	3/22/00	3/22/00	3/23/00	AVG	SDEV	PRSD
pH	4.64	4.56	4.57	4.59	0.04	0.9%
Aluminum	16.4	18.9	22.2	19.2	2.9	15.2%
Calcium	655	701	697	684	25	3.7%
Iron (total)	1.15	1.35	1.52	1.34	0.19	13.8%
Magnesium	131	139	136	135	4	3.0%
Manganese	1.50	1.59	1.73	1.61	0.12	7.2%
Potassium	6.27	6.66	6.31	6.41	0.21	3.3%
Sodium	24.9	25.9	25.0	25.3	0.6	2.2%
Silicon	52.6	56.5	56.6	55.2	2.3	4.1%
Titanium	0.38	0.43	0.56	0.46	0.09	20.3%
Phosphorous	0.14	0.20	0.22	0.19	0.04	22.3%
Sulfur	736	779	757	757	22	2.8%
Mercury, ppb	0.90	1.10	0.78	0.93	0.16	17.4%

Unit No. 3 Scrubber Discharge Slurry Filtrate Water
all results are mg/L (ppm) unless noted

Test ID	T-1	T-2	T-3			
Date	3/22/00	3/22/00	3/23/00	AVG	SDEV	PRSD
pH	4.63	4.64	4.70	4.66	0.04	0.8%
Aluminum	20.3	16.0	14.1	16.8	3.2	18.9%
Calcium	769	774	726	756	26	3.5%
Iron (total)	1.03	0.67	0.63	0.78	0.22	28.4%
Magnesium	139	132	128	133	6	4.2%
Manganese	1.74	1.68	1.75	1.72	0.04	2.2%
Potassium	6.43	5.58	5.57	5.86	0.49	8.4%
Sodium	24.6	21.3	21.6	22.5	1.8	8.1%
Silicon	59.3	56.6	52.5	56.1	3.4	6.1%
Titanium	0.27	0.21	0.21	0.23	0.03	15.1%
Phosphorous	0.14	0.14	0.10	0.13	0.02	18.2%
Sulfur	824	799	757	793	34	4.3%
Mercury, ppb	1.10	0.85	0.79	0.91	0.16	18.0%

Table 3-15
Summary of Process Solid Sample Stream Results
Unit No. 3 Filtered Scrubber Slurry Solids
Dry Basis - All Results Percent Unless Noted

Test ID	T-1	T-2	T-3			
Date	3/21/00	3/21/00	3/22/00	AVG	SDEV	PRSD
Ash	98.50	98.16	98.17	98.28	0.19	0.2%
Carbon	0.24	0.25	0.23	0.24	0.01	4.2%
Sulfur	0.96	0.60	0.51	0.69	0.24	34.5%
Mercury, ppm	0.076	0.042	0.035	0.051	0.022	43.0%
Total Moisture	1.70	1.68	2.27	1.88	0.34	17.8%
Ash Elements						
SiO2	42.79	43.89	45.40	44.03	1.31	3.0%
Al2O3	22.64	22.38	22.15	22.39	0.25	1.1%
TiO2	1.19	1.18	1.07	1.15	0.07	5.8%
Fe2O3	4.72	4.83	4.52	4.69	0.16	3.4%
CaO	16.05	15.66	15.14	15.62	0.46	2.9%
MgO	4.23	4.37	4.22	4.27	0.08	2.0%
Na2O	2.54	2.49	2.27	2.43	0.14	5.9%
K2O	0.54	0.58	0.54	0.55	0.02	4.2%
P2O5	0.38	0.38	0.34	0.37	0.02	6.3%
SO3	2.39	1.49	1.28	1.72	0.59	34.3%
Undetermined	2.53	2.75	3.07	2.78	0.27	9.8%

Table 3-16
Summary of Process Liquid Sample Stream Results

Unit No. 4 Scrubber Overspray Water
all results are mg/L (ppm) unless noted

Test ID	T-1	T-2	T-3			
Date	3/27/00	3/28/00	3/28/00	AVG	SDEV	PRSD
pH	7.67	7.83	7.81	7.77	0.09	1.1%
Aluminum	<0.05	<0.05	<0.05	0.0	0.0	0.0%
Calcium	44.2	43.1	44.0	43.8	0.6	1.3%
Iron (total)	1.98	2.00	1.92	1.97	0.04	2.1%
Magnesium	15.1	14.6	14.8	14.8	0.3	1.7%
Manganese	0.28	0.28	0.28	0.28	0.00	0.0%
Potassium	2.18	2.09	2.17	2.15	0.05	2.3%
Sodium	3.99	3.86	3.99	3.95	0.08	1.9%
Silicon	2.18	2.13	3.26	2.52	0.64	25.3%
Titanium	0.06	0.06	0.06	0.06	0.00	0.0%
Phosphorous	<0.05	<0.05	<0.05	0.00	0.00	0.0%
Sulfur	3.65	3.34	2.20	3.06	0.76	24.9%
Mercury, ppb	0.78	0.91	0.61	0.77	0.15	19.6%

Unit No. 4 Scrubber Overflow Slurry Filtrate Water
all results are mg/L (ppm) unless noted

Test ID	T-1	T-2	T-3			
Date	3/27/00	3/28/00	3/28/00	AVG	SDEV	PRSD
pH	4.16	4.02	3.96	4.05	0.10	2.5%
Aluminum	225	259	293	259	34	13.1%
Calcium	416	412	436	421	13	3.1%
Iron (total)	3.80	3.76	4.09	3.88	0.18	4.6%
Magnesium	10400	10600	10300	10433	153	1.5%
Manganese	8.31	6.22	6.45	6.99	1.15	16.4%
Potassium	140	142	138	140	2	1.4%
Sodium	1200	1200	1600	1333	231	17.3%
Silicon	93.2	116.7	127.5	112.5	17.5	15.6%
Titanium	1.21	0.98	0.76	0.98	0.23	22.9%
Phosphorous	2.17	2.21	2.05	2.14	0.08	3.9%
Sulfur	15280	15857	15447	15528	297	1.9%
Mercury, ppb	2.7	2.9	2.4	2.7	0.3	9.4%

Table 3-17
Summary of Process Solid Sample Stream Results
Unit No. 4 Filtered FGD Scrubber Slurry Solids
Dry Basis - All Results Percent Unless Noted

Test ID	T-1	T-2	T-3			
Date	3/27/00	3/28/00	3/28/00	AVG	SDEV	PRSD
Ash	93.74	94.41	94.18	94.11	0.34	0.4%
Carbon	0.03	0.03	0.04	0.03	0.01	17.3%
Sulfur	8.56	7.41	7.73	7.90	0.59	7.5%
Mercury, ppm	0.021	0.027	0.028	0.025	0.004	14.9%
Total Moisture	16.18	9.27	9.46	11.64	3.94	33.8%
Ash Elements						
SiO2	31.17	34.53	33.94	33.21	1.79	5.4%
Al2O3	16.09	16.34	15.96	16.13	0.19	1.2%
TiO2	0.76	0.83	0.82	0.80	0.04	4.7%
Fe2O3	2.74	3.36	3.08	3.06	0.31	10.1%
CaO	14.89	13.47	14.07	14.14	0.71	5.0%
MgO	2.27	1.91	1.84	2.01	0.23	11.5%
Na2O	1.69	1.69	1.72	1.70	0.02	1.0%
K2O	0.49	0.56	0.62	0.56	0.07	11.7%
P2O5	0.25	0.26	0.25	0.25	0.01	2.3%
SO3	21.41	18.52	19.32	19.75	1.49	7.6%
Undetermined	8.24	8.53	8.38	8.38	0.15	1.7%

Table 3-18
Summary of Process Solid Sample Stream Results
Unit No. 4 ESP Fly Ash
Dry Basis - All Results Percent Unless Noted

Test ID	T-1	T-2	T-3			
Date	3/27/00	3/28/00	3/28/00	AVG	SDEV	PRSD
Ash	99.83	99.92	99.86	99.87	0.05	0.0%
Carbon	0.03	0.04	0.04	0.04	0.01	15.7%
Sulfur	0.45	0.40	0.44	0.43	0.03	6.2%
Mercury, ppm	0.010	0.016	0.012	0.013	0.003	24.1%
Total Moisture	0.01	0.01	0.01	0.01	0.00	0.0%
Ash Elements						
SiO2	42.89	46.89	47.59	45.79	2.54	5.5%
Al2O3	21.30	21.11	21.14	21.18	0.10	0.5%
TiO2	1.05	1.04	1.04	1.04	0.01	0.6%
Fe2O3	5.14	4.73	4.42	4.76	0.36	7.6%
CaO	18.01	16.43	15.83	16.76	1.13	6.7%
MgO	4.71	4.09	4.00	4.27	0.39	9.1%
Na2O	2.36	2.23	2.47	2.35	0.12	5.1%
K2O	0.55	0.93	1.04	0.84	0.26	30.6%
P2O5	0.35	0.34	0.34	0.34	0.01	1.7%
SO3	1.13	1.00	1.10	1.08	0.07	6.3%
Undetermined	2.51	1.21	1.03	1.58	0.81	51.0%

With the exception of mercury value obtained for Test Run 1 on Unit 2 a review of the coal sample stream results indicate a consistent coal quality was fired to all units during all test periods.

The results obtained on the ash and liquid samples are comparable from run to run and indicate consistent boiler firing and pollution control operations.

Detailed analytical summaries are provided in Appendix D of this report.

3.3.5 Unit Operation and Key Operational Parameters

This section describes the Units 2, 3, and 4 operations during the test program and provides the key operating parameters that were monitored and documented during testing.

3.3.5.1 Unit Operation During Testing

Operation of Units 2, 3, and 4 during testing was representative of normal daily operation at or near full load. Steady-state testing conditions were maintained during all test periods. Sootblowing activities were suspended during testing on each boiler.

3.3.5.2 Process Control Data

All key power generation process operating parameters and control data were recorded by a data acquisition system. The facilities data acquisition system provided values at 1-minute intervals.

A summary of the key operating data is provided in Tables 3-19, 3-20 and 3-21 for Units 2, 3, and 4. All additional process, CEMS and pollution control systems operations data are provided in Appendix B.

3.4 TESTING PROBLEMS OR MODIFICATIONS

As previously stated it is believed that the mercury levels measured at the Unit No. 4 FGD scrubber inlet may not be truly representative of the mercury emissions encountered during the test program. See Section 5.1.6 for additional discussion relating to the potential low bias for the samples collected at the Unit 4 FGD inlet.

Table 3-19
Summary of Key Process Control Data
Unit No. 2

Parameter	Units	Run No.		
		1	2	3
Gross Generation	MW	56.5	56.7	56.7
Coal Total	lbs/hr	64520	64760	64760
Main Steam Flow	klbs/hr	382	381	376
Air Flow(1)	kscfm	1133	1122	1107
Stack Opacity(1)	%	10	10.3	10.5
Stack CEMs (SO_2)(1)	lb/MMBtu	0.95	0.88	0.87
Stack CEMs (NO_x)(1)	lb/MMBtu	0.42	0.44	0.47
Stack CEM (CO_2)(1)	%	12.0	12.2	12.1
Baghouse Pressure Drop	In. H_2O	7.68	7.60	7.58

(1) Facility CEMS readings from combined Units 1, 2 and 3 stack.

Table 3-20
Summary of Key Process Control Data
Unit No. 3

Parameter	Units	Run No.		
		1	2	3
Gross Generation	MW	338	333	334
Coal Total	lbs/hr	374260	368400	369200
Main Steam Flow	klbs/hr	1987	1944	1993
Air Flow(1)	kscfm	64750	66680	65240
Stack CEMs (SO_2)(1)	lb/MMBtu	0.85	0.83	1.00
Stack CEMs (NO_x)(1)	lb/MMBtu	0.44	0.43	0.32
Stack CEM (CO_2)(1)	%	12.4	12.0	12.0

(1) Facility CEMS readings from combined Units 1, 2 and 3 stack

Table 3-21
Summary of Key Process Control Data
Unit No. 4

Parameter	Units	Run No.		
		1	2	3
Gross Generation	MW	540	540	540
Coal Total	lbs/hr	589240	589400	589400
Main Steam Flow	klbs/hr	3277	3130	3149
Air Flow	kscfm	83500	82030	81841
Stack Outlet Temp.	°F	151	152	155
Stack Opacity	%	18.6	18.5	18.5
Stack CEMs (SO_2)	lb/MMBtu	0.10	0.10	0.10
Stack CEMs (NO_x)	lb/MMBtu	0.25	0.28	0.25
Stack CEM (CO_2)	%	12.6	12.4	12.5
FGD Venturi Pressure Drop Module A	In H_2O	12.7	14.4	15.6
B		8.9	14.8	16.0
C		13.7	15.3	16.5
D		13.3	14.9	16.1

The Sampling/Testing, Analytical and QC plan dated May 1999 included reduced numbers of sampling points for Ontario Hydro sampling at the Unit 3 scrubber inlet, Unit 2 baghouse inlet and outlet and at the Unit 4 FGD inlet. This was due to the difficulty associated with performing multi-point sampling at these locations, and the concern about the close proximity of an in-stack thimble holder to the near wall of the test port. During the actual testing EPA Method 1 traverse port criteria was followed except for the Unit 3 scrubber outlet. At this location traversing the 30′ deep duct was not possible, therefore, the Ontario Hydro traverse ports were based on one-half (15′) of the duct depth. The Unit 3 outlet volumetric flow was based on the inlet volumetric flow and the oxygen difference (measured by EPA Method 3) across the scrubber.

No other sampling or analytical problems were noted during the test program. No process problems were noted during any of the test periods.

4. SAMPLING AND ANALYTICAL PROCEDURES

4.1 DESCRIPTION OF SAMPLING EQUIPMENT

4.1.1 Ontario Hydro Mercury Speciation Method

The Ontario Hydro sampling train contained the following components:

- At the Unit 2 baghouse inlet and outlet and at the Unit 4 inlet a calibrated borosilicate nozzle was attached to a borosilicate thimble holder containing a high capacity in-stack quartz fiber thimble using an EPA Method 17 sampling approach.
- The thimble holder was attached to a heated borosilicate probe equipped with a calibrated thermocouple to measure flue gas temperature and a calibrated S-type pitot tube to measure flue gas velocity pressure.
- At the Unit 3 scrubber inlet an out-of-stack heated thimble holder containing a high capacity quartz fiber thimble was attached to the outlet of the borosilicate sample probe. Both the probe and thimble holder were maintained at the Unit 3 inlet flue gas temperature.
- An EPA Method 5 sampling approach using an out-of-stack filter holder containing a 90 mm quartz fiber filter was used at the Unit 3 and Unit 4 outlet locations.
- The probe assembly at all test locations was connected to the inlet of the first impinger using either a rigid borosilicate connector or heated Teflon line.
- An impinger train consisting of eight impingers. The first, second, and third impingers each contained 100 ml of 1 Normal (N) potassium chloride (KCl). The fourth impinger contained 100 ml of 5% nitric acid (HNO_3) and 10% hydrogen peroxide (H_2O_2). The fifth, sixth and seventh impingers each contained 100 ml of 4% potassium permanganate ($KMnO_4$) and 10% sulfuric acid (H_2SO_4). The eighth impinger contained 300 grams of dry preweighed silica gel. The third and seventh impingers were a Greenburg-Smith type; all other impingers were of a modified design. All impingers were maintained in a crushed ice bath.
- A vacuum line (umbilical cord) with adapter to connect the outlet of the impinger train to a control module.
- A control module containing a 3-cfm carbon vane vacuum pump (sample gas mover), a calibrated dry gas meter (sample gas volume measurement device), a calibrated orifice (sample gas flow rate monitor) and inclined manometers (orifice and gas stream pressure indicators).

- A switchable calibrated digital pyrometer to monitor flue and sample gas temperatures.

See Figures 4-1, 4-2 and 4-3 for schematics of the Ontario Hydro test trains used at the various locations.

4.2 CO_2 AND O_2 SAMPLING EQUIPMENT

The fixed gases sampling train (Figure 4-4) used at the inlet and outlet test sites was assembled in accordance with EPA Method 3 and consisted of the following components:

- A stainless steel or Teflon probe (fastened to the Ontario Hydro sampling probe) with a plug of glass wool to remove particulate.
- An ice-cooled condenser to remove moisture from the sampled gases.
- A diaphragm pump to draw a sample of the gases.
- A valve and rate meter to control and monitor gas stream sampling rates, respectively.
- A Tedlar® bag to contain the sample of flue gases.

The CO_2 and O_2 concentrations of each bag were analyzed using an Orsat analyzer per EPA Method 3 procedures.

4.3 MERCURY CEMS EQUIPMENT

Automated on-line mercury analyzers are being developed based on well-established techniques, including cold-vapor atomic absorption spectroscopy (CVAAS), cold-vapor atomic fluorescence spectroscopy (CVAFS), and atomic emission spectroscopy (AES), as well as on the emerging technology of chemical microsensors. The analyzers can be used to directly measure Hg^0 in fossil fuel combustion flue gas on a continuous or semi-continuous basis and can be equipped with converters for reducing Hg^{2+} forms to Hg^0 to determine total mercury; the Hg^{2+} concentration can be determined by difference. Although costly to purchase, install, and maintain, on-line continuous emission analyzers offer several advantages:

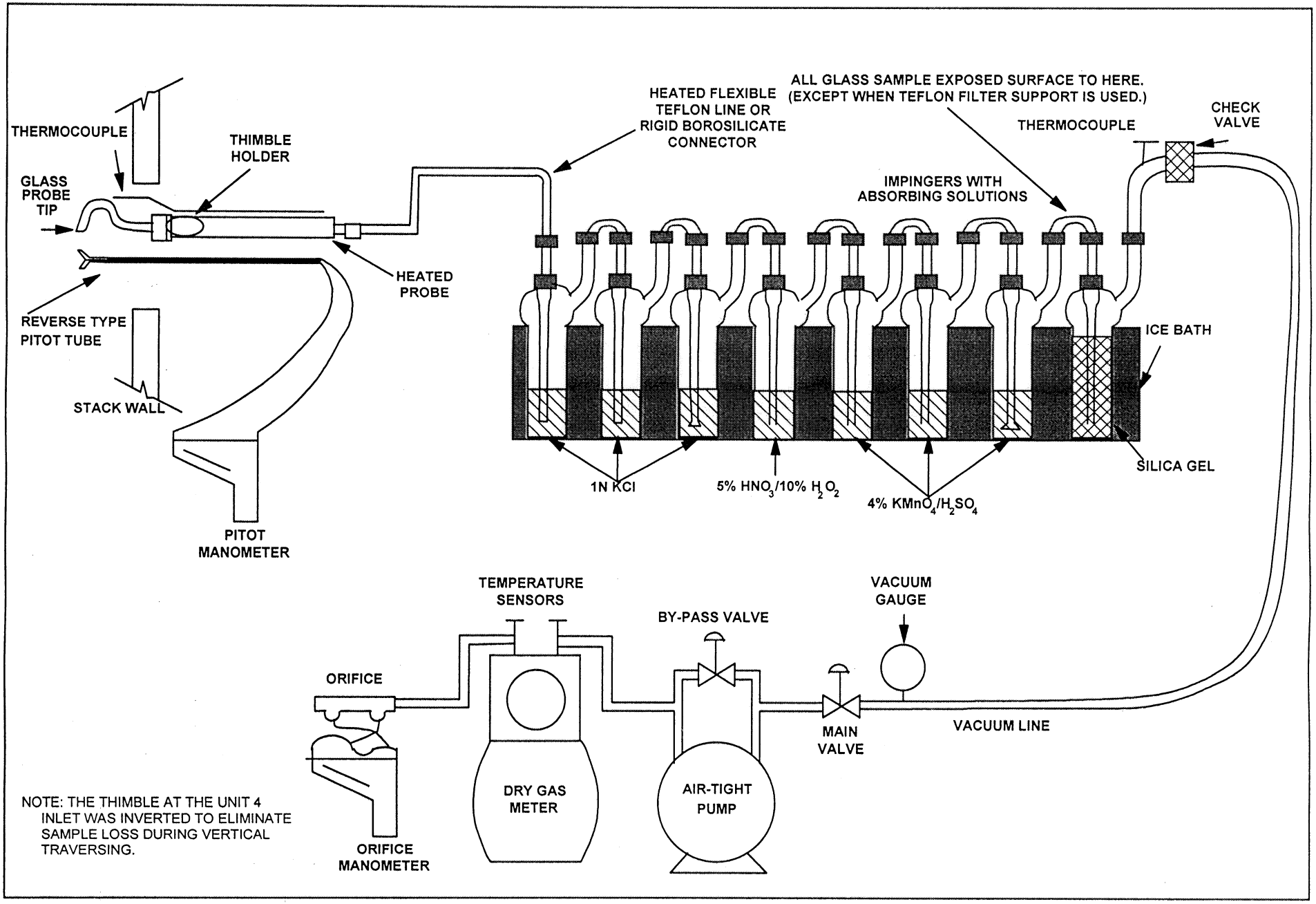

FIGURE 4-1
UNIT 2 INLET/OUTLET AND UNIT 4 INLET
ONTARIO HYDRO SAMPLING TRAIN

D:\freelancedrawingS\UNIT2 INLET-OUTLET.prz

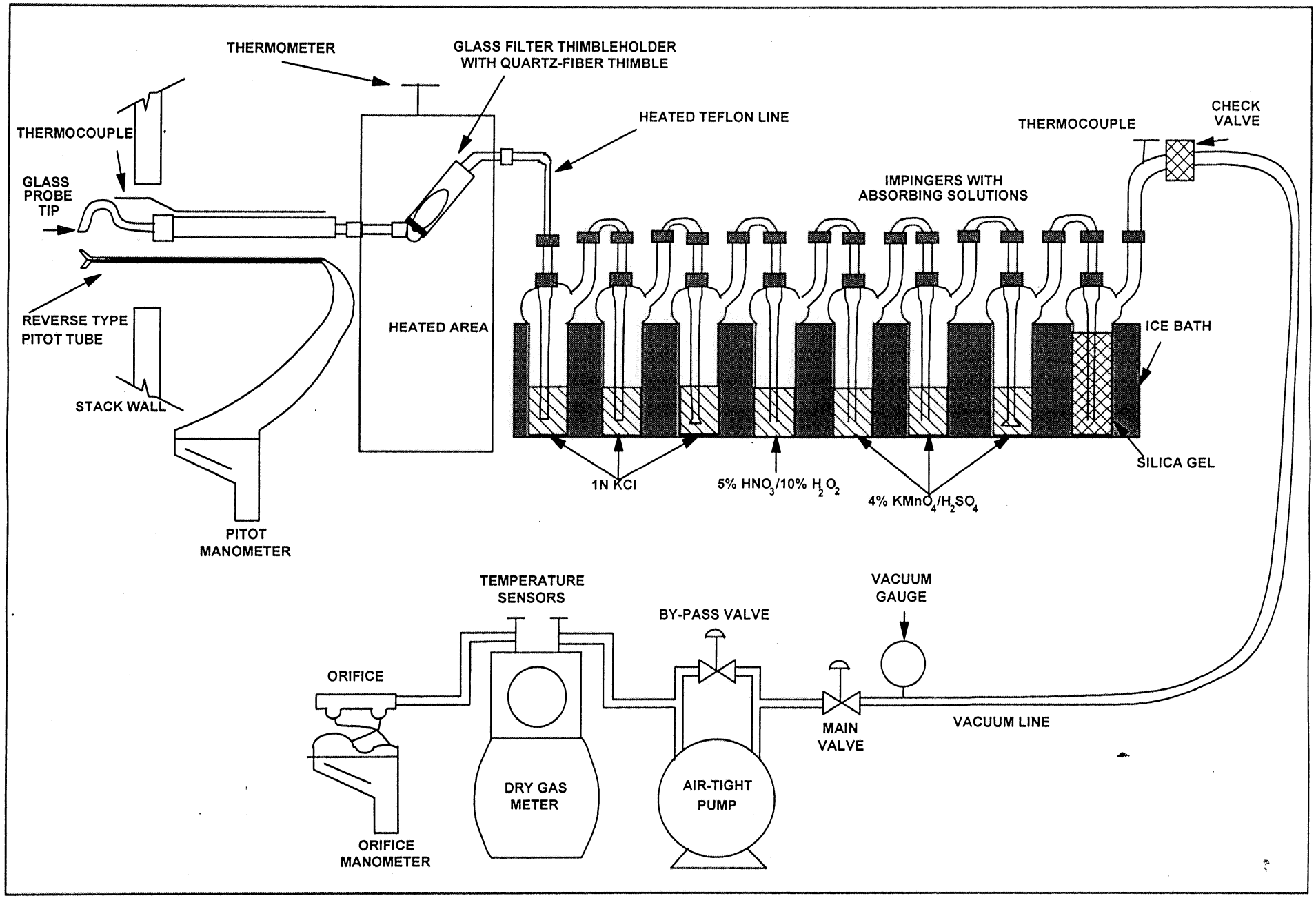

FIGURE 4-2
UNIT 3 INLET
ONTARIO HYDRO SAMPLING TRAIN

D:\freelancedrawings\UNIT3 INLET.prz

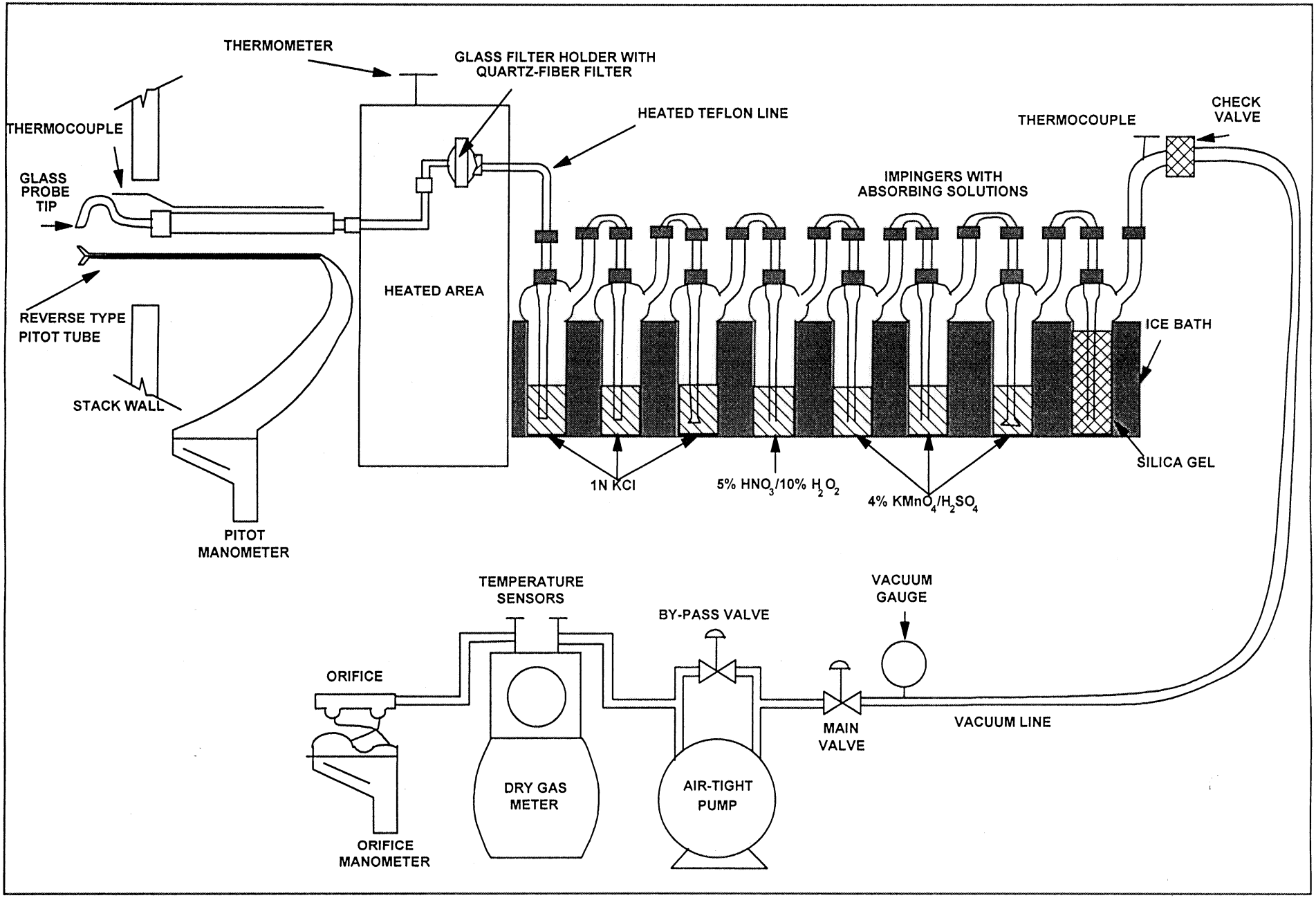

FIGURE 4-3
UNIT 3 AND 4 OUTLETS
ONTARIO HYDRO SAMPLING TRAIN

D:\freelancedrawings\Unit3,4 Outlets.prz

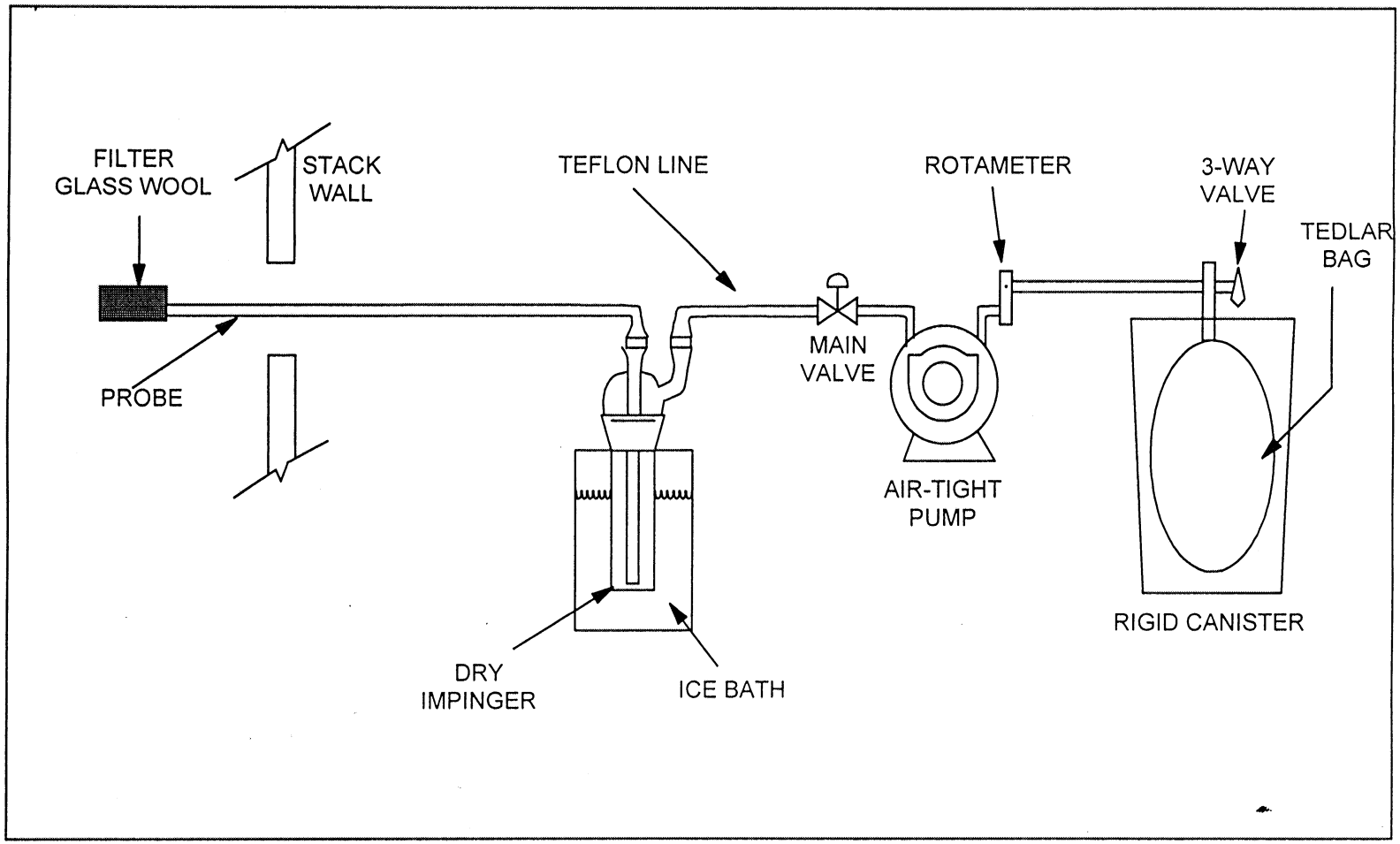

FIGURE 4-4
EPA METHOD 3
DRY GAS STREAM COMPOSITION SAMPLING TRAIN

- An analyzer can be used for feedback on process control of mercury control systems, thus maximizing removal efficiency.
- A properly designed analyzer requires minimal operator input.
- An analyzer can provide information on the temporal variations of mercury emissions for a process that may be variable in its emission characteristics.

On-line mercury emission analyzers can be categorized as either extractive or in situ. Extractive analyzers are usually located remote to the sample extraction point; therefore, a flue gas sample is removed, transported, and conditioned before it actually enters the mercury analyzer. In situ mercury emission analyzers are mounted on the stack or duct and do not require sample transport or gas conditioning. All on-line analyzers use elaborate calibration systems.

Several on-line mercury analyzers have recently been developed primarily for measuring total mercury emissions from waste incinerators. Application of these analyzers to coal combustion flue gas is difficult because mercury emission levels from coal combustion are much lower than those from waste incinerators, and the presence of acid gases and other flue gas components causes interference with the mercury measurement techniques. For the tests the Boswell Energy Center, two different mercury analyzers were used: the Tekran and the Semtech Hg 2000. These two instruments are described below.

4.3.1 Description of Mercury CEMS

Semtech Hg 2000 The commercial Semtech Hg 2000 mercury analyzer (Semtech Metallurgy AB, Lund, Sweden) is essentially a portable Zeeman-modulated CVAAS that can monitor Hg^0 continuously. By using an on-line reduction unit, total mercury can be monitored continuously. In the reduction unit, a reducing solution, such as stannous chloride ($SnCl_2$) or sodium borohydride ($NaBH_4$) is pumped to the sampling probe. The extracted gas sample and reducing solution are transported continuously through a mixing spiral to maximize the gas solution residence time and ensure complete conversion of Hg^{2+} to Hg^0. The presence of SO_2 (>200 ppm) interferes with the chemical conversion process in the reduction unit and, therefore, must be removed prior to the measurement of total mercury. After conversion to Hg^0, the sample gas is transferred to a Peltier cooled gas/liquid separator. The conditioned dry gas is then analyzed

using the Semtech Hg 2000 analyzer. The analyzer uses Zeeman effect background correction by applying a modulated magnetic field to a mercury lamp to minimize interferences from the presence of SO_2, hydrocarbons, and fine particulate in the flue gas sample. The Semtech has recently been upgraded to a Hg 2010. This upgrade was designed to reduce noise in the mercury signal. The operating range of the analyzer is 0.3 $\mu g/Nm^3$ to 20 mg/Nm^3 Hg^0, as specified by Semtech Metallurgy AB. The Semtech Hg 2000 has also been certified by TUEV Rheinland for determining compliance with the German legal limit of 50 $\mu g/m^3$ for total mercury from waste incinerators.

The Semtech Hg 2000 was designed to measure only Hg^0. However, by passing the gas through a solution such as $SnCl_2$ which reduces all the mercury present in gas to Hg^0, total mercury can be measured. However, it has been shown that the presence of SO_2 (>200 ppm) interferes with the chemical conversion process in the reduction unit and, therefore, must be removed prior to the measurement of total mercury. Therefore, a new conversion system was designed at the EERC to reduce the Hg^{2+} to Hg^0. The primary feature of this system is an acid gas trap that removes the SO_2 without removing the mercury. The system can then be operated such that it can measure either total mercury or Hg^0.

Tekran. The Tekran analyzer has been, until recently, used to measure ambient mercury concentrations continuously. However, by providing a pretreatment system it can also be used in a variety of gaseous media including combustion flue gas. The analyzer is based on the principle of atomic fluorescence which provides an inherently more sensitive signal than atomic absorption. The system uses a gold-impregnated silica support for preconcentrating the mercury and separating it from potential interferences that degrade sensitivity.

The Tekran requires a four-step process to obtain a flue gas mercury measurement. In the first step, 2 L of flue gas are pumped through a gold trap which is maintained at a constant temperature. The gold trap is then removed from the flue gas stream and placed into the analyzer. Before the mercury is desorbed from the gold trap, a flushing step is initiated to remove any flue gas that may be present because it has a damping effect on the mercury fluorescence. When this is completed, the analysis step begins. The heating coil is activated, and the gold trap is heated to approximately 500°C. This desorbs the mercury from the trap, and the mercury is carried into the

fluorescence detector. The gold trap is rapidly cooled by pumping argon over it, in preparation for the next sample. The total time for the entire process is about 1 to 3 minutes and is totally automated. The Tekran instrument is calibrated automatically using Hg^0 as the primary standard. The Hg^0 is contained in a closed vial which is held in a thermostatic bath. The temperature of the mercury is monitored, and the amount of mercury is calculated using vapor pressure calculations. Typically, the calibration of the unit has proven stable over a 24-hr period.

Although no mercury conversion is necessary for this instrument, as stated earlier a pretreatment system is necessary for the Tekran CEM to accurately measure mercury from coal-fired flue gas. It has been found that hydrochloric acid (HCl) in the presence of NO_x in the gas stream results in a low bias. Therefore, the same pretreatment system used for the Semtech Hg 2000 CEM is also used with the Tekran CEM. In this case the acid trap removes the HCl in addition to the SO_2.

4.4 SAMPLING PROCEDURES

The following paragraphs and flow charts summarize the procedures used to sample the flue gases, recovery of the resultant samples and analyze the samples.

4.4.1 Preliminary Tests

Following equipment setup, preliminary test data was compiled at each of the emission test sites to verify pretest data/assumptions, determine nozzle sizes, and compute isokinetic sampling rates.

Test site geometric measurements were measured and sampling point distances were recalculated. A pitot traverse was performed to determine velocity profiles and to check for the presence/absence of cyclonic flow at each site. The cyclonic flow checks proved negative at all test locations. As appropriate, flue gas temperatures, dry gas composition, and moisture content were also determined by EPA Reference Methods 2, 3, and 4, respectively.

The preparation, sampling, and recovery procedures used to sample the emission points for speciated mercury conformed to those specified in the draft Ontario Hydro method and as described in the Site-Specific Sampling/Testing, Analytical and QA/QC plan.

With the exception of the Unit 2 inlet and Unit 3 outlet test locations, all tests were 120 minutes in duration. The test duration at the Unit 2 inlet and Unit 3 outlet test locations were 125 minutes. Readings were recorded at each traverse point at all test locations. Leak checks were performed at the beginning and end of each test run and before and after test port changes. Figure 4-5 depicts the train preparation. Figure 4-6 illustrates the sampling procedures. Figure 4-7 illustrates the sample recovery procedures.

4.5 ANALYTICAL PROCEDURES

The analytical procedures utilized during this program are described in the following subsections.

4.5.1 Process Stream Samples – CONSOL R&D

This subsection contains a list of the methods used by CONSOL for analysis of non-air process stream samples for mercury and other parameters. The analytical methods employed were those published by the American Society for Testing and Materials (ASTM), EPA, the American Public Health Association, EPRI or self validating methods used by CONSOL. Analytical methods applied are listed by analyte and matrix in Table 4-1. Method descriptions are provided below for the coal and ash samples.

4.5.2 Analytical Procedures for Coal Analysis

Proximate analysis – moisture, volatile matter, fixed carbon, ash

ASTM D 5142 Proximate Analysis of Coal and Coke by Instrumental Procedures

Moisture, volatile matter, fixed carbon, and ash were determined by establishing the loss in mass of a test specimen under rigidly controlled conditions of temperature, time, atmosphere, and specimen mass.

All samples were analyzed in duplicate. Duplicate results must meet ASTM criteria for repeatability. Since this is an empirical test, no certified standards are available. An in-house quality control sample, whose limits have been established by its utilization in analyzing round robin samples, was analyzed along with each batch of test specimens. Results for the control

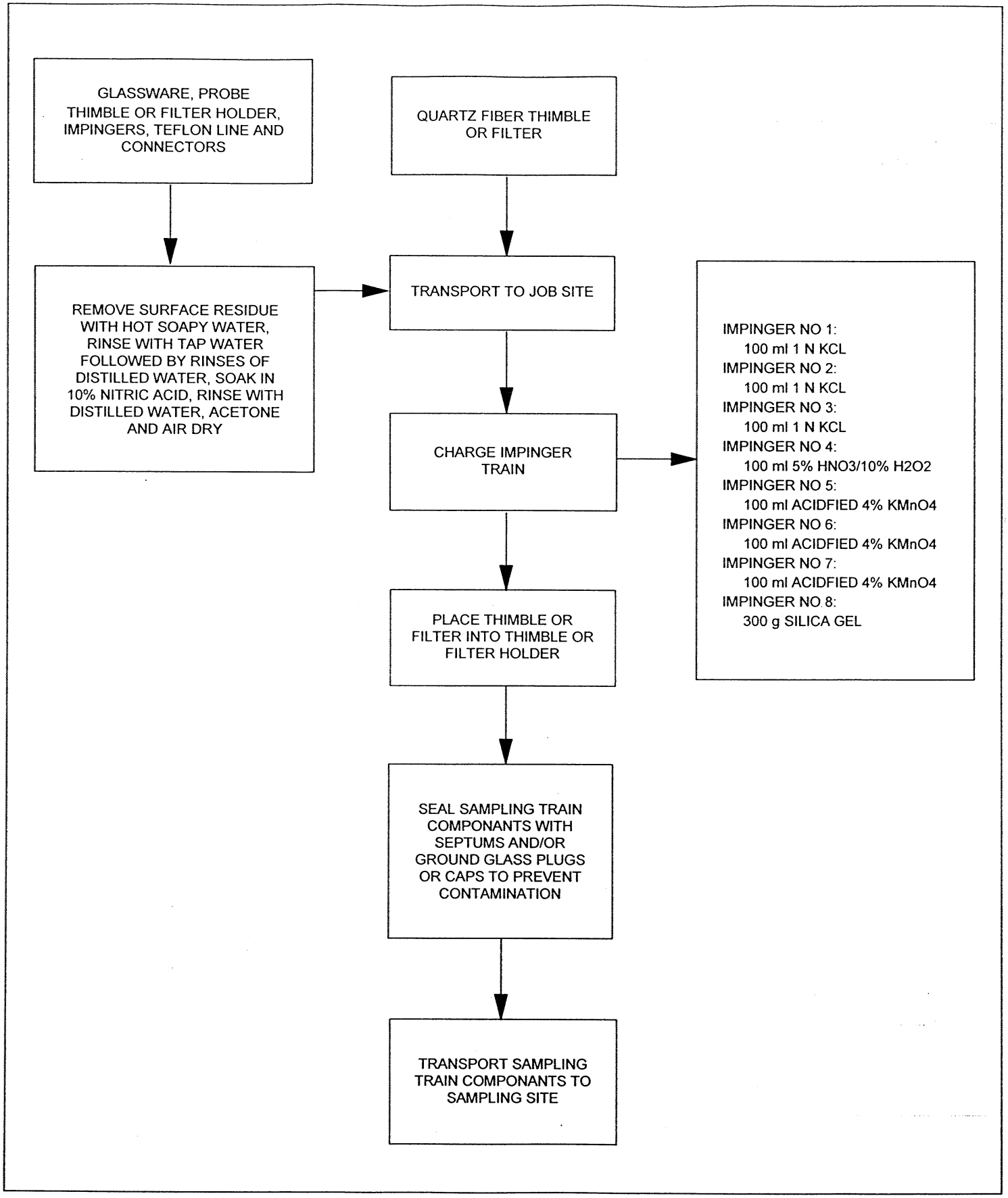

FIGURE 4-5
PREPARATION PROCEDURES FOR ONTARIO HYDRA SAMPLING TRAIN

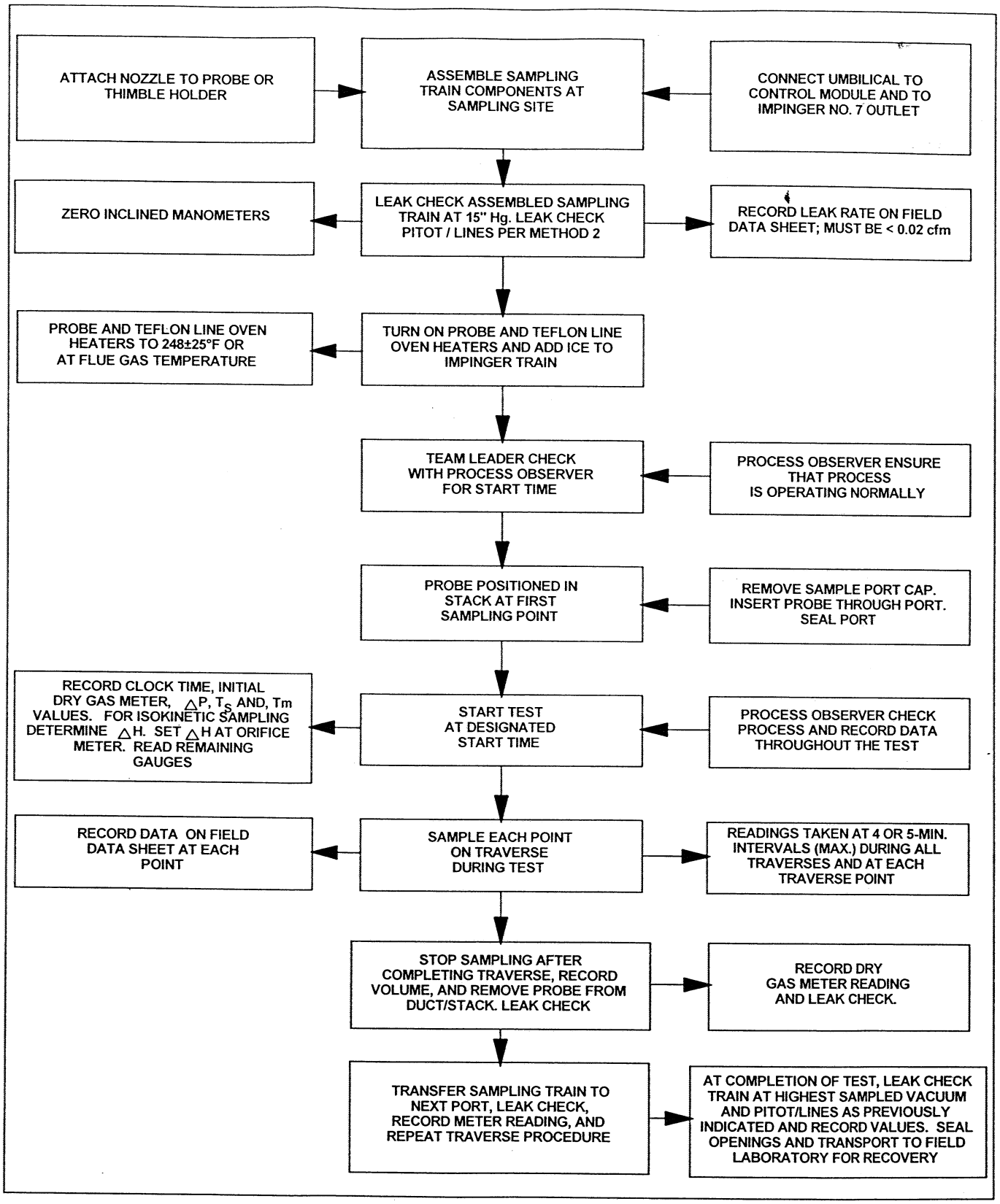

FIGURE 4-6
SAMPLING PROCEDURES FOR ONTARIO HYDRA TRAIN

Dc:\freelance drawings\Samp Procedures

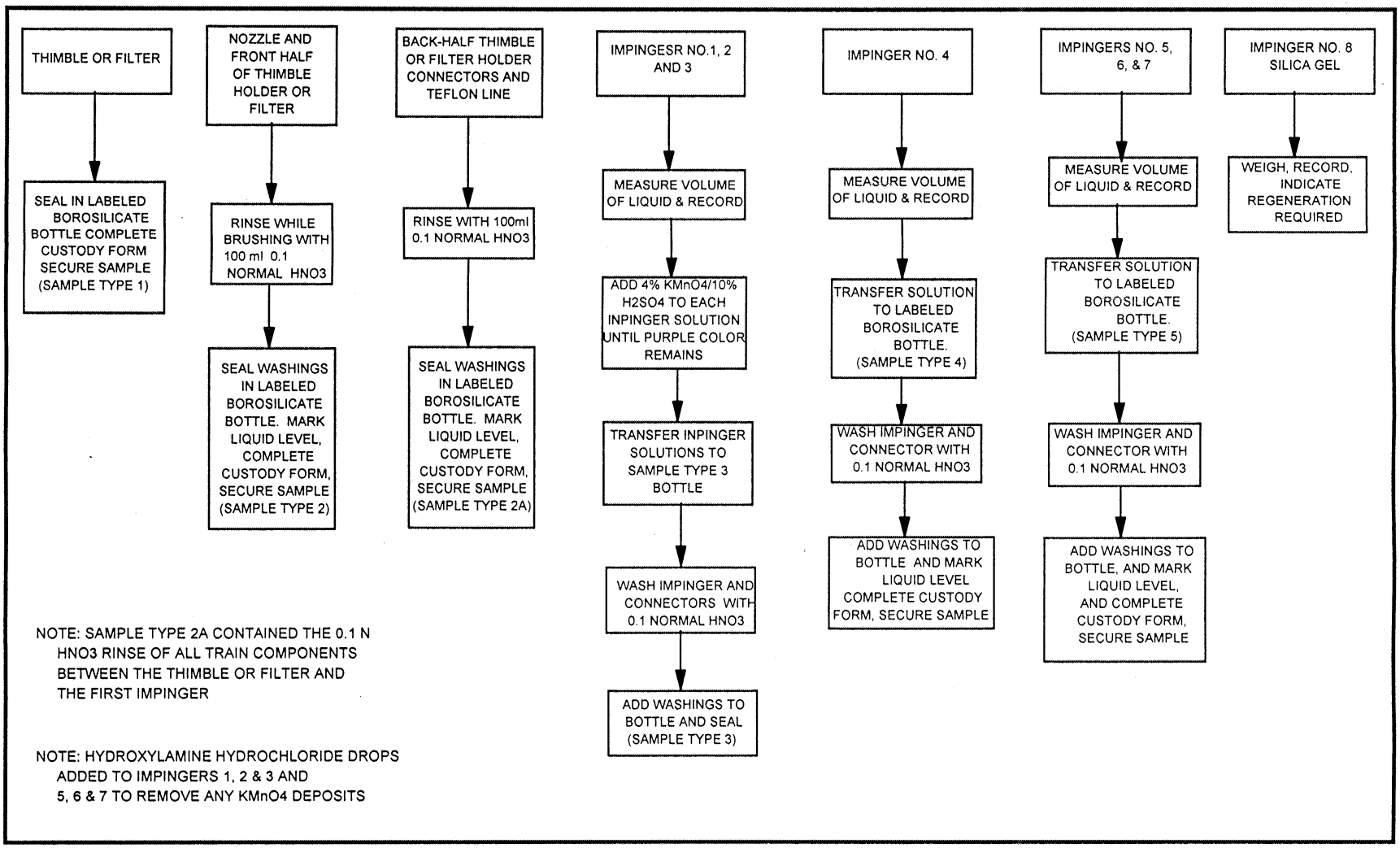

FIGURE 4-7

SAMPLE RECOVERY PROCEDURES FOR ONTARIO HYDRO METHOD

D:\Projects\freelance drawings\Samp Recov Procedures.PRZ

Table 4-1

Methods Used for the Analysis of Boswell Energy Center Units 2, 3 and 4 Process Streams Samples

Analyte	Coal	Baghouse, ESP and Scrubber Solid and Liquids
Moisture, Ash, Volatile matter, Fixed Carbon	ASTM D 5142-90	NA
Carbon, Hydrogen, Nitrogen	ASTM D 5373	ASTM D 5373
Sulfur	ASTM D 4239-85	NA
Oxygen	By Difference	NA
Higher Heating Value	ASTM D 1989-91	NA
Mercury	Proposed ASTM Method	Proposed ASTM Method
Chlorine	ASTM E 776 and EPA Method 300	NA
Major Ash Elements	ASTM D3682-78 ICP-AES	ICP-AES

sample must be within established limits for the parameters being measured or the results for the entire set of test specimens are rejected and the test procedure is repeated.

4.5.2.1 Ultimate Analysis for Carbon, Hydrogen, and Nitrogen

ASTM D-5373 Instrumental Determination of Carbon, Hydrogen, and Nitrogen in Coal Samples

Carbon, hydrogen, and nitrogen were determined concurrently in a single instrumental procedure. The procedure provides for the combustion and conversion of the subject elements in an oxygen stream in their entirety to carbon dioxide, water vapor, and nitrogen oxides. Carbon dioxide and water vapor were determined by infrared detection, nitrogen oxides are reduced to nitrogen and determined by thermal conductivity.

The instrument is calibrated daily by analyzing, as samples, National Institute for Standards and Technology (NIST) Standard Reference Material (SRM) Coal 1632b. The calibration is verified by analyzing an in-house quality control standard whose limits have been establish by utilizing it in the analysis of round robin samples. The quality control sample is analyzed at least once for every ten samples analyzed. The results for the control sample must be within established limits for the parameters being measured or the test results obtained up to the last acceptable analyses of the control sample are rejected. All samples were analyzed in duplicate. Duplicate results must meet ASTM criteria for repeatability or the samples are reanalyzed.

4.5.2.2 Sulfur

ASTM D 4239-85 Method C Sulfur in the Analysis Sample of Coal Using High Temperature Tube Furnace Combustion with Infrared Absorption Detection.

A known mass of the test specimen was burned at high temperature in a stream of oxygen. Sulfur in the test specimen is quantitatively converted to sulfur dioxide that is measured by an infrared absorption detector.

The equipment is calibrated or has proper calibration verified daily by analyzing as samples, NIST Coal SRMs 1632b, 2682, 2683a, 2684a, 2685, or 2692. The calibration standard used is dependent

on the expected concentration of sulfur in the samples. The calibration is validated and linearity is established by analyzing two other coal standards whose sulfur concentrations, when possible, brackets the calibration standard sulfur concentration.

All test specimens were analyzed in duplicate. Duplicate results must meet ASTM criteria for repeatability. An in-house quality control sample whose limits have been determined by its use in round robin programs, was analyzed at least once during each hour the equipment was in operation. The result for the control sample must be within established limits or the results for the test specimens analyzed up to the last acceptable analysis of the control sample are rejected.

4.5.2.3 Oxygen

The percentage of oxygen in a dried sample is calculated as follows:

% Oxygen = 100 - (%ash + %carbon + %hydrogen + %nitrogen + %sulfur)

When the chlorine concentration in the sample is determined, the following calculation applies:

% Oxygen = 100 - (%ash + %carbon + %hydrogen + %nitrogen + %sulfur + %chlorine)

The accuracy and precision are a function of all the analytical results used in the calculation.

4.5.2.4 Higher Heating Value

ASTM D 1989-91 Gross Calorific Value of Coal by Microprocessor Controlled Isoperibol Calorimeters

The heating value of the test specimen was determined by burning a known mass under controlled conditions, in an atmosphere of oxygen, using a microprocessor-controlled isoperibol calorimeter. The system is calibrated by burning certified benzoic acid. Results are expressed in British thermal units per pound (Btu/lb).

Verification of proper calibration is established daily by analyzing benzoic acid. All samples were analyzed in duplicate and results must agree within ASTM limits.

Thermochemical corrections for fuse wire, nitric acid and sulfuric acid are made as per ISO and British Standard Methods.

4.5.2.5 Mercury

Proposed ASTM Method

A one gram, 60 mesh coal sample was digested with a solution of HCl and HNO_3 in a polycarbonate bottle at 80°C for 1 hour. The solid residue was filtered and the remaining solution was analyzed for Hg using cold vapor atomic adsorption. This technique is currently being reviewed by ASTM for Hg analysis of coal samples.

A known concentration of vapor-phase mercury is used to calibrate the instrument. The calibration is validated by analyzing NIST 1632b and/or NIST 1635.

4.5.2.6 Chlorine

Preparation of the coal samples will follow ASTM Method D-2013. Following air drying and riffling the coal samples were pulverized until 100% of the sample passed the 60-mesh screen.

The prepared coal sample was weighed. The weighed sample was oxidized by combustion in a bomb with a bicarbonate/carbonate solution and the amount of chlorine present was determined by ion-chromatography (IC) using EPA Method 300 procedures.

4.5.2.7 Major Ash Elements

Major Ash Elements analysis included Na_2O, K_2O, MgO, CaO, Fe_2O_3, TiO_2, P_2O_5, SiO_2, Al_2O_3, and SO_3.

A sample of 60 mesh coal was ashed according to the method outlined in ASTM D3682-78. The resulting ash is pressure-digested using hydrochloric acid, hydrofluoric acid and nitric acid.

The concentrations of the ten major ash elements were determined by inductively coupled plasma-atomic emission spectroscopy (ICP-AES). All samples are digested and analyzed in duplicate. Duplicate analyses must meet the repeatability limits listed in ASTM D3682-78. A

mass balance of 97.5-101.5 weight percent must be obtained for the ten elemental oxides. Samples not meeting this requirement are redigested and reanalyzed.

NIST fly ash 1633a is used to calibrate the ICP-AES. The calibration is checked with a secondary coal ash standard. The calibration is reassessed every eight samples by analyzing a quality control standard. The instrument is recalibrated as required.

4.5.3 Analytical Procedures for Baghouse Ash, ESP Ash, and Scrubber Solids

4.5.3.1 Carbon

ASTM D 5373

Carbon was determined using the same procedure outlined for coal analysis, Section 4.5.2. The instrument was calibrated daily by analyzing as samples NIST SRM 2704. All samples were analyzed in duplicate. Duplicate results must agree within 5% of the of the average of the two results for samples with carbon contents >1% or within 15% for samples <1% or the analysis is repeated. A quality control sample was analyzed once for every ten samples analyzed. The result for the control sample must be within ASTM repeatability or the results for the test specimens analyzed up to the last acceptable analysis of the control sample are rejected. Proper calibration must be re-established before resuming analysis of test specimens.

4.5.3.2 Mercury

Proposed ASTM Method

Analysis and quality control follow the description outlined under coal analysis, Section 4.5.2.5. The calibration was validated by analyzing NIST fly ash 1633a.

4.5.3.3 Major Ash Elements

Analysis and quality control follow the description outlined under coal analysis Section 4.5.2.7 except that the ash samples were not prepared (ashed) per ASTM D3682-78.

4.5.4 Analytical Procedures for Scrubber Liquid Samples

Elemental analysis of the liquid samples was conducted by ICP-AES. For these determinations, aliquots of each sample were digested in strong acid to assure all of the elements were in solution. The ICP was calibrated using a multi-element standard prepared from individual elemental stock standards procured from VHG Labs. All 12 samples were analyzed in the same analytical run and a single QC (VHG Labs) sample was used to verify the calibration of the instrument. The ICP completes multiple scans for each sample. The percent relative differences obtained for these scans are shown in the Appendix D. Because the process stream samples were taken in triplicate, no duplicates were run.

Mercury was determined by cold vapor atomic adsorption (CVAA). The CVAA analyzer was calibrated using NIST reference material and checked using a NIST 1641d SRM. A total of four QACS were analyzed showing an accuracy of 111%. One sample was spiked and showed a spike recovery of 93%.

4.6 AIR SAMPLE ANALYSIS PROCEDURES

Speciated Mercury Analysis Procedures

Samples collected for speciated mercury analysis were contained in six different media:

Sample Fraction	Container No.	Mercury Form
▪ Thimble or Filter	Container No. 1	Particulate Hg
▪ Nozzle and front-half thimble holder nitric acid	Container No. 2	Particulate Hg
▪ Back-half thimble holder, probe, and Connector rinses	Container No. 2A	Oxidized (Hg^{2+})
▪ KCl impingers 1, 2, and 3 and rinses	Container No. 3	Oxidized (Hg^{2+})
▪ HNO_3/H_2O_2 impingers and rinses	Container No. 4	Elemental (Hg°)
▪ $KMnO_4/H_2SO_4$ impingers 5, 6, and 7 and rinses	Container No. 5	Elemental (Hg°)

Analytical procedures and calculations for the mercury determination were performed as specified in the Ontario Hydro Method. The analytical procedures are outlined below.

All Ontario Hydro impinger sample fractions were analyzed onsite by EERC following sample collection and recovery. Following field sample preparation, samples 2A, 3, 4 and 5 were

analyzed onsite by EERC using cold vapor atomic absorption (CVAA). The particulate sample fractions (samples 1 and 2) digestion and analysis were not performed in the field.

A Leeman Labs P-5200 CVAA was used in the field for mercury determination. Each day, a four-point calibration curve was completed using matrix-matched standards. A QC standard of a known analyte concentration was analyzed immediately after the instrument was standardized in order to verify the calibration. The values obtained must read within 5% of the true value. After the initial QC standardization was completed, standards were run every five samples to verify the slope of the calibration curve. The check standards must read within 5% of the expected value. All samples were then run in duplicate, and one in every ten samples were spiked to verify analyte recovery.

The particulate samples (1 and 2) were combined, digested and analyzed using CVAA at the EERC laboratory in Grand Forks, North Dakota.

The mercury results for each sample fraction were reported as total micrograms (ug) per sample.

In addition, each quartz thimble used for sampling at the ESP inlets and outlets were tared and the total particulate collected in each thimble was measured to determine the particulate collected by the ESP. This data was used to support the material balance calculations.

A schematic of the Ontario Hydro method analytical procedures is provided in Figure 4-8.

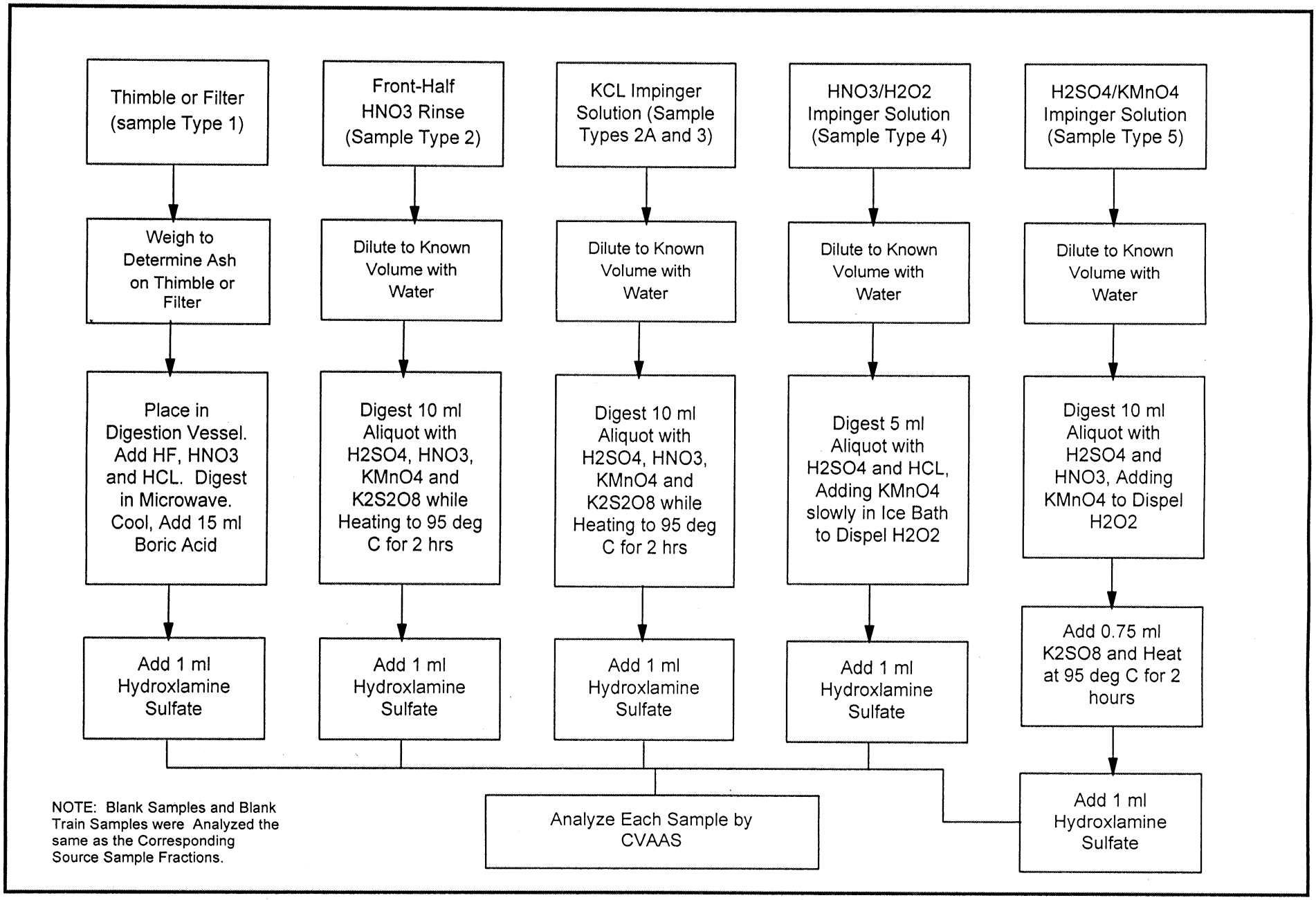

FIGURE 4 - 8
ANALYTICAL PROCEDURE FOR
ONTARIO HYDRO SAMPLING TRAIN

D:\freelance drawing\Analyt Procedures.prz

5. QUALITY ASSURANCE SUMMARY

This section discusses results for QC samples collected during the test program. Discussions are provided for stack gas samples (Subsection 5.1) and coal ash and liquid samples (Subsection 5.2).

5.1 STACK SAMPLE QA/QC RESULTS

This section provides detailed information regarding the QA/QC activities associated with stack sample collection, analysis, and reporting.

This summary pertains to all test data collected from sampling activities performed on Units 2, 3 and 4 during the period of 20 through 28 March 2000. Analyses were performed on these samples for speciated mercury.

Project data quality objectives, as measured by precision, accuracy and completeness, were evaluated. Additionally, holding times, spike recoveries, laboratory blanks, and calibrations were evaluated to determine overall data quality based on criteria specified in the Site-Specific Sampling/Testing, Analytical and QA/QC Plan and the Quality Assurance Project Plan.

5.1.1 Stack Sample Collection and Calculations

Field QA/QC activities associated with the collection of stack Ontario Hydro method emission samples included pre- and post-test calibrations of sampling equipment, adherence to the proper sampling method procedures, documentation of field data, recovery of samples without contamination, and collection of appropriate field train and site blank samples.

Copies of the field data sheets are contained in Appendix C. Chain of custody forms are included in each laboratory report and provide a list of all samples collected and submitted for analysis during the test program. The laboratory reports are provided in Appendix D.

Proper field sampling procedures include sampling at 100% isokinetic ±10% and maintaining sample train leakage rates at ≤ 0.02 CFM. Table 5-1 contains a summary of all isokinetic sampling rates for all tests, initial and final leak check rates, and pre- and post-test dry gas meter

Table 5-1

Stack Emission Sampling Field QA/QC Results

Test Location	Test Run	Isokinetic Sampling Rate[1]	Initial Leak Check Rate[2]	Final Leak Check Rate[2]	Gas Meter Calibration Values[3]	
					Pre	Post
Unit No. 2 Inlet	1	101.3	0.005	0.006	1.0072	1.003
	2	99.4	0.004	0.004	1.0072	1.003
	3	102.2	0.005	0.004	1.0072	1.003
Unit No. 2 Outlet	1	101.5	0.010	0.010	0.9958	1.006
	2	104.2	0.010	0.008	0.9958	1.006
	3	105.0	0.010	0.004	0.9958	1.006
Unit No. 3 Inlet	1	105.5	0.002	0.004	0.9926	0.9580
	2	101.8	0.004	0.006	0.9926	0.9580
	3	103.0	0.002	0.004	0.9926	0.9580
Unit No. 3 Outlet	1	99.6	0.008	0.015	0.9979	1.001
	2	96.9	0.012	0.011	0.9979	1.001
	3	97.3	0.016	0.012	0.9979	1.001
Unit No. 4 Inlet	1	105.3	0.005	0.001	0.9926	0.9580
	2	104.4	0.015	0.002	0.9926	0.9580
	3	106.8	0.001	0.002	0.9926	0.9580
Unit No. 4 Inlet	1	101.8	0.004	0.005	1.0072	1.003
	2	103.9	0.008	0.004	1.0072	1.003
	3	102.5	0.008	0.005	1.0072	1.003

1 Isokinetic rate must be 100 ± 10%. All sampling rates met isokinetic criteria.

2 Initial and final leak check value must be ≤ 0.02 CFM. All leak checks were acceptable.

3 Post-test calibration must be ± 0.05 of pre-test value. All calibration values were acceptable.

Note:

Silica gel impinger exit temperature maintained ≤ 68°F during all test periods.

calibration results. This table indicates that all test runs were within the acceptable ranges for all field measurements. Appendix F contains the stack test equipment calibration data.

5.1.2 Sample Chain of Custody

Sample custody procedures were followed per the QAPP. Following collection and recovery, all samples were transferred to representatives of EERC. As described in Section 4 of this report, sample types 2A, 3, 4, and 5 were analyzed onsite. Sample types 1 and 2 (which contained the particulate bound mercury) were analyzed off site at the EERC laboratory. The sample storage area was locked and secured during off-hours when test representatives were not on-site.

All samples arrived in good condition to the EERC laboratory.

5.1.3 Stack Emission Blank Sample Results

Blank samples were submitted with the stack emissions samples as designated in the test method and QAPP. During each set of the three test runs, a blank sample train was setup, leak checked and recovered at each of the test locations on Units 2, 3 and 4. Site blanks of the thimbles, filters, impinger train solutions and recovery solutions were retained and analyzed. With a few minor exceptions no mercury above the analytical detection limit was present in any of the site blanks or blank train samples collected for Units 2, 3 and 4. Low levels of mercury (0.02 and 0.05μg) were detected in the KCL portion of the Unit 3 outlet and Unit 4 inlet blank trains. A measured value of 0.01 μg was found in the $KMNO_4$ portion of the Unit 3 outlet blank train. These values are near the detection limit and were not considered in adjusting any source values.

5.1.4 Ontario Hydro Analysis Holding Times

Holding time is the period from sample collection to sample analysis. All holding times for all Ontario Hydro sample parameters were within the maximum time period of 45 days per the Site-Specific Sampling/Testing Analytical and QA/QC Plan. As previously mentioned the bulk of the sample analysis were performed onsite within 1 to 4 days following sample collection.

5.1.5 External Performance Evaluation Audits

No performance evaluation audits were provided to WESTON by the regulatory agencies during the test program.

5.1.6 Ontario Hydro Analysis QA/QC Results and Conclusions

As previously stated the Site-Specific Sampling/Testing, Analytical and QA/QC Plan and QAPP developed for the Boswell sampling program identified a number of QA/QC procedures to ensure the quality of the data generated from the testing. For the Ontario Hydro sample analysis these included the following.

- Blank Reagent Sample Analyses.
- Field Blank Train Samples.
- All samples analyzed in duplicate using CVAA.
- Every 10th sample analyzed in triplicate using CVAA.
- The instrument calibrated and properly set up prior to use each day.
- The use of check standards every 5 samples to verify the calibration.

Based on a review of the sample results obtained at the Unit No. 4 scrubber inlet it is believed that the mercury concentrations measured and reported at that location may be bias low.

An in-stack thimble was used to collect the particulate bound mercury at the Unit 4 inlet. Use of the in-stack thimble results in a thimble sample and a 0.1N HNO_3 rinse sample of the front-half portion of the thimble holder. These samples were recovered, maintained and analyzed separately. The thimble sample was digested per Section 13.3.2 of the Ontario Hydro method. This procedure requires a rigorous digestion using heat and the addition of hydrochloric acid (HCl) and hydrofluoric acid (HF) to solubilize the mercury.

Based on the Ontario Hydro method the front-half HNO_3 sample is not subjected to the same rigorous digestion. In the case of samples collected at the Unit 4 scrubber inlet, a high volume of particulate adhered to the walls of the nozzle and front-half of the thimble holder. It is believed that in the absence of the rigorous digestion the mercury may not go completely into solution and low bias the results.

A review of the analytical results show measurable quantity of mercury found in the thimble ash sample and virtually no mercury measured in the front-half HNO_3 rinse sample which also contained significantly quantities of the same ash.

EPA and EERC should consider revising the analytical portion of the Ontario Hydro method to subject the nitric acid rinses (for the particulate fraction) to the same rigorous digestion as required for the thimble ash.

Since quantities of ash collected in the HNO_3 acid rinse samples at the other inlet locations were minimal and in most cases the particulate bound mercury was low there appears to be no impact of the representativeness of the test results at the other locations.

All other mercury speciation stack emissions data and results are believed to be representative of the emissions encountered during the test periods and appear to be acceptable following QA/QC review.

5.2 PROCESS SOLID SAMPLE QA/QC RESULTS

The Site-Specific Sampling/Analytical and QA/QC Plan and the QAPP for this program identified the analytical QC objectives for the process solid sample analysis.

A detailed QA/QC discussion with results of all QA/QC analysis results is provided in Appendix D of this report. A brief summary of the results follows.

Analytical Precision

All process stream coal ash and liquid samples were analyzed in duplicate. Analytical precision was determined by the percent relative difference (RPD) obtained by the duplicate sample analyses. The RPD objective for the mercury in coal and ash was ≤ 20%. The RPD for moisture ultimate/proximate, carbon and major ash elements is ≤ 10%. The RPD objectives for duplicate analyses were met in all cases for all analytes.

Analytical Accuracy

The objectives for accuracy for spike samples and laboratory control samples were 70 to 130% for the mercury in coal and ash, 90 to 110% for ultimate/proximate and carbon and 80-120% for chlorine and the major ash elements. The objectives for accuracy were satisfied in all cases. Most values ranged between 94 and 104% recovery.

5.2.1 Holding Times

All process samples were analyzed within the required holding times as specified in the Site-Specific Sampling/Testing, Analytical and QA/QC Plan.

5.2.2 Process Sample QA/QC Conclusions

All solid sample process data and results appear to be acceptable following QA/QC review.

5.3 COMPLETENESS

Laboratory completeness is a measure of the amount of valid measurements obtained from all the laboratory measurements associated with this test program. The number of valid measurements satisfied the laboratory completeness goal identified in the Site-Specific Sampling/Testing, Analytical and QA/QC Plan QAPP of greater than 90 percent.

Based on a review of all QA/QC results, no data has been lost or qualified as not satisfied the QC criteria for precision and accuracy. Therefore, a 100% completeness can be assigned for both sampling and analysis.