UNITED STATES ENVIRONMENTAL PROTECTION AGENCY
Region 1
5 Post Office Square, Suite 100
BOSTON, MA 02109-3912

CERTIFIED MAIL RETURN RECEIPT REQUESTED

APR 12 2012

Paul Lockwood
President
Lockwood Remediation Technology, LLC
127 Hartwell Street, Suite 3
West Boylston, MA 01583

Re: Authorization to discharge under the Remediation General Permit (RGP) – MAG910000. Hartwell Business Park site located at 127 Hartwell Street, West Boylston, MA 01583, Worcester County; Authorization # MAG910526

Dear Mr. Lockwood:

Based on the review of a Notice of Intent (NOI) submitted on behalf of Con Edison, Inc. and Apex Companies, LLC by your firm Lockwood Remediation Technology, LCC, for the site referenced above, the U.S. Environmental Protection Agency (EPA) hereby authorizes you, as the named Operator, to discharge in accordance with the provisions of the RGP at that site. Your authorization number is listed above.

The checklist enclosed with this RGP authorization indicates the pollutants which you are required to monitor. Also indicated on the checklist are the effluent limits, test methods and minimum levels (MLs) for each pollutant. Please note that the checklist does not represent the complete requirements of the RGP. Operators must comply with all of the applicable requirements of this permit, including influent and effluent monitoring, narrative water quality standards, record keeping, and reporting requirements, found in Parts I and II, and Appendices I – VIII of the RGP. See EPA's website for the complete RGP and other information at: http://www.epa.gov/region1/npdes/mass.html#dgp.

Please note the enclosed checklist includes parameters that have historically been present in hydrostatic testing waters resultant of the cleaning tanks and pipes containing petroleum. The checklist also includes metal parameters for which your laboratory reports indicated there was insufficient sensitivity to detect these parameters at the minimum levels established in Appendix VI of the RGP.

Also, please note that the metals included on the checklist are dilution dependent pollutants and subject to limitations based on a dilution factor range (DFR). With the absence of dilution to wetlands, EPA determined that the DFR for each parameter is in the one and five (1-5) range. (See the RGP Appendix IV for Massachusetts facilities)

Therefore, the limits for arsenic of 10 ug/L, trivalent chromium of 48.8 ug/L, hexavalent chromium of 11.4 ug/L, lead of 1.3 ug/L, nickel of 29 ug/L, and zinc of 66.6 ug/L, are required to achieve permit compliance at your site.

Finally, please note that the treated effluent from this site will go into a wetland leading to the Wachusett Reservoir a Class A water body, discharges of this nature are exempt for coverage under the RGP unless a variance is granted by the Massachusetts Department of Environmental Protection (MassDEP). Because a variance was granted for the effluent discharges it will be subject to the RGP regulations and also subject to the conditions of the variance issued by Massachusetts Department of Conservation and Recreation and approved by MassDEP. You must adhere to the conditions of the variance. Attached is a copy of the variance letter.

This general permit and authorization to discharge will expire on September 9, 2015. You have reported that this project will terminate on May 30, 2012. If for any reason the discharge terminates sooner you are required to submit a Notice of Termination (NOT) to the attention of the contact person indicated below within 30 days of project completion.

Thank you in advance for your cooperation in this matter. Please contact Victor Alvarez at 617-918-1572 or Alvarez.Victor@epa.gov, if you have any questions.

Sincerely,

Thelma Murphy

Thelma Murphy, Manager
Storm Water and Construction
Permits Section

Enclosure

cc: Kathleen Keohane, MassDEP
Patricia Austin, MA DCR

2010 Remediation General Permit
Summary of Monitoring Parameters[1]

NPDES Authorization Number:	**MAG910526**
Authorization Issued:	April, 2012
Facility/Site Name:	Hartwell Business Park
Facility/Site Address:	127 Hatwell Street, West Boylston, Massachusetts 01583, Worcester County
	Email address of owner: SMigridichlan@cea-inc.com
Legal Name of Operator:	Lockwood Remediation Technology. LLC
Operator contact name, title, and Address:	Paul Lockwood, President, 127 Hartwell Street, Suite 3, West Boylston, MA 01583, Worcester County
	Email: plockwood@lrt-llc.net
Estimated date of Completion:	May 30, 2012
Category and Sub-Category:	Category IV- Miscellaneous Related Discharges. Sub-category C. Hydrostatic Testing of Pipelines and Tanks
RGP Termination Date:	September 10, 2015
Receiving Water:	Wetland leading to Wachusett Reservoir

Monitoring & Limits are applicable if checked. All samples are to be collected as grab samples

	Parameter	**Effluent Limit/Method#/ML** (All Effluent Limits are shown as Daily Maximum Limit, unless denoted by a **, in that case it will be a Monthly Average Limit)
	1. Total Suspended Solids (TSS)	30 milligrams/liter (mg/L) **, 50 mg/L for hydrostatic testing **, Me#60.2/ML5ug/L
	2. Total Residual Chlorine (TRC) [1]	Freshwater = 11 ug/L ** Saltwater = 7.5 ug/L **/ Me#330.5/ML 20ug/L
√	3. Total Petroleum Hydrocarbons (TPH)	5.0 mg/L/ Me# 1664A/ML 5.0mg/L
	4. Cyanide (CN) [2, 3]	Freshwater = 5.2 ug/l ** Saltwater = 1.0 ug/L **/ Me#335.4/ML 10ug/L
	5. Benzene (B)	5ug/L /50.0 ug/L for hydrostatic testing only/ Me#8260C/ML 2 ug/L
	6. Toluene (T)	(limited as ug/L total BTEX)/ Me#8260C/ ML 2ug/L
	7. Ethylbenzene (E)	(limited as ug/L total BTEX) Me#8260C/ ML 2ug/L
	8. (m,p,o) Xylenes (X)	(limited as ug/L total BTEX) Me#8260C/ ML 2ug/L

	Parameter	**Effluent Limit/Method#/ML** (All Effluent Limits are shown as Daily Maximum Limit, unless denoted by a **, in that case it will be a Monthly Average Limit)
√	9. Total Benzene, Toluene, Ethyl Benzene, and Xylenes (BTEX) [4]	100 ug/L/ Me#8260C/ ML 2ug/L
	10. Ethylene Dibromide (EDB) (1,2- Dibromoethane)	0.05 ug/l/ Me#8260C/ ML 10ug/L
	11. Methyl-tert-Butyl Ether (MtBE)	70.0 ug/l/Me#8260C/ML 10ug/L
	12.tert-Butyl Alcohol (TBA) (TertiaryButanol)	Monitor Only(ug/L)/Me#8260C/ML 10ug/L
	13. tert-Amyl Methyl Ether (TAME)	Monitor Only(ug/L)/Me#8260C/ML 10ug/L
√	14. Naphthalene [5]	20 ug/L /Me#8260C/ML 2ug/L
	15. Carbon Tetrachloride	4.4 ug/L /Me#8260C/ ML 5ug/L
	16. 1,2 Dichlorobenzene (o-DCB)	600 ug/L /Me#8260C/ ML 5ug/L
	17. 1,3 Dichlorobenzene (m-DCB)	320 ug/L /Me#8260C/ ML 5ug/L
	18. 1,4 Dichlorobenzene (p-DCB)	5.0 ug/L /Me#8260C/ ML 5ug/L
	18a. Total dichlorobenzene	763 ug/L - NH only /Me#8260C/ ML 5ug/L
	19. 1,1 Dichloroethane (DCA)	70 ug/L /Me#8260C/ ML 5ug/L
	20. 1,2 Dichloroethane (DCA)	5.0 ug/L /Me#8260C/ ML 5ug/L
	21. 1,1 Dichloroethene (DCE)	3.2 ug/L/Me#8260C/ ML 5ug/L
	22. cis-1,2 Dichloroethene (DCE)	70 ug/L/Me#8260C/ ML 5ug/L
	23. Methylene Chloride	4.6 ug/L/Me#8260C/ ML 5ug/L
	24. Tetrachloroethene (PCE)	5.0 ug/L/Me#8260C/ ML 5ug/L
	25. 1,1,1 Trichloro-ethane (TCA)	200 ug/L/Me#8260C/ ML 5ug/L
	26. 1,1,2 Trichloro-ethane (TCA)	5.0 ug/L /Me#8260C/ ML 5ug/L
	27. Trichloroethene (TCE)	5.0 ug/L /Me#8260C/ ML 5ug/L
	28. Vinyl Chloride (Chloroethene)	2.0 ug/L /Me#8260C/ ML 5ug/L
	29. Acetone	Monitor Only(ug/L)/Me#8260C/ML 50ug/L
	30. 1,4 Dioxane	Monitor Only /Me#1624C/ML 50ug/L
	31. Total Phenols	300 ug/L Me#420.1&420.2/ML 2 ug/L/ Me# 420.4 /ML 50ug/L
	32. Pentachlorophenol (PCP)	1.0 ug/L /Me#8270D/ML 5ug/L,Me#604 &625/ML 10ug/L
	33. Total Phthalates (Phthalate esters) [6]	3.0 ug/L ** /Me#8270D/ML 5ug/L, Me#606/ML 10ug/L& Me#625/ML 5ug/L
	34. Bis (2-Ethylhexyl) Phthalate [Di- (ethylhexyl) Phthalate]	6.0 ug/L /Me#8270D/ML 5ug/L,Me#606/ML 10ug/L & Me#625/ML 5ug/L

	Parameter	Effluent Limit/Method#/ML (All Effluent Limits are shown as Daily Maximum Limit, unless denoted by a **, in that case it will be a Monthly Average Limit)
	35. Total Group I Polycyclic Aromatic Hydrocarbons (PAH)	10.0 ug/L
√	a. Benzo(a) Anthracene [7]	0.0038 ug/L /Me#8270D/ ML 5ug/L, Me#610/ML 5ug/L& Me#625/ML 5ug/L
√	b. Benzo(a) Pyrene [7]	0.0038 ug/L /Me#8270D/ ML 5ug/L, Me#610/ML 5ug/L& Me#625/ML 5ug/L
√	c. Benzo(b)Fluoranthene [7]	0.0038 ug/L /Me#8270D/ ML 5ug/L, Me#610/ML 5ug/L& Me#625/ML 5ug/L
√	d. Benzo(k)Fluoranthene [7]	0.0038 ug/L /Me#8270D/ ML 5ug/L, Me#610/ML 5ug/L& Me#625/ML 5ug/L
√	e. Chrysene [7]	0.0038 ug/L /Me#8270D/ML 5ug/L, Me#610/ML 5ug/L& Me#625/ML 5ug/L
√	f. Dibenzo(a,h)anthracene [7]	0.0038 ug/L /Me#8270D/ML 5ug/L, Me#610/ML 5ug/L& Me#625/ML 5ug/L
√	g. Indeno(1,2,3-cd) Pyrene [7]	0.0038 ug/L /Me#8270D/ML 5ug/L, Me#610/ML 5ug/L& Me#625/ML5ug/L
	36. Total Group II Polycyclic Aromatic Hydrocarbons (PAH)	100 ug/L
	h. Acenaphthene	X/Me#8270D/ML 5ug/L,Me#610/ML 5ug/L & Me#625/ML 5ug/L
	i. Acenaphthylene	X/Me#8270D/ML 5ug/L,Me#610/ML 5ug/L & Me#625/ML 5ug/L
	j. Anthracene	X/Me#8270D/ML 5ug/L,Me#610/ML 5ug/L & Me#625/ML 5ug/L
	k. Benzo(ghi) Perylene	X/Me#8270D/ML 5ug/L,Me#610/ML 5ug/L & Me#625/ML 5ug/L
	l. Fluoranthene	X/Me#8270D/ML 5ug/L,Me#610/ML 5ug/L & Me#625/ML 5ug/L
	m. Fluorene	X/Me#8270D/ML 5ug/L,Me#610/ML 5ug/L & Me#625/ML 5ug/L
	n. Naphthalene [5]	20 ug/l / Me#8270/ML 5ug/L, Me#610/ML 5ug/L & Me#625/ML 5ug/L
	o. Phenanthrene	X/Me#8270D/ML 5ug/L,Me#610/ML 5ug/L & Me#625/ML 5ug/L
	p. Pyrene	X/Me#8270D/ML5ug/L,Me#610/ML 5ug/L & Me#625/ML 5ug/L
	37. Total Polychlorinated Biphenyls (PCBs) [8, 9]	0.000064 ug/L/Me# 608/ ML 0.5 ug/L
√	38. Chloride	Monitor only/Me# 300.0/ ML 0.1ug/L

	Metal parameter	Total Recoverable Metal Limit @ H [10]= 50 mg/l CaCO3 for discharges in Massachusetts (ug/l) [11/12]	Minimum level=ML

		Freshwater			
	39. Antimony	5.6/ML 10			
√	40. Arsenic **	10/ML20			
	41. Cadmium **	0.2/ML10			
√	42. Chromium III (trivalent) **	48.8/ML15			
√	43. Chromium VI (hexavalent) **	11.4/ML10			
	44. Copper **	5.2/ML15			
√	45. Lead **	1.3/ML20			
	46. Mercury **	0.9/ML0.2			
√	47. Nickel **	29/ML20			
	48. Selenium **	5/ML20			
	49. Silver	1.2/ML10			
√	50. Zinc **	66.6/ML15			
	51. Iron	1,000/ML 20			

	Other Parameters	Limit
√	52. Instantaneous Flow	Site specific in CFS
√	53. Total Flow	Site specific in CFS
√	54. pH Range for Class A & Class B Waters in MA	6.5-8.3; 1/Month/Grab[13]
	55. pH Range for Class SA & Class SB Waters in MA	6.5-8.3; 1/Month/Grab[13]
	56. pH Range for Class B Waters in NH	6.5-8; 1/Month/Grab[13]
	57. Daily maximum temperature - Warm water fisheries	83°F; 1/Month/Grab[14]
	58. Daily maximum temperature - Cold water fisheries	68°F; 1/Month/Grab[14]
	59. Maximum Change in Temperature in MA - Any Class A water body	1.5°F; 1/Month/Grab[14]
	60. Maximum Change in Temperature in MA - Any Class B water body- Warm Water	5°F; 1/Month/Grab[14]
	61. Maximum Change in Temperature in MA – Any Class B water body - Cold water and Lakes/Ponds	3°F; 1/Month/Grab[14]
	62. Maximum Change in Temperature in MA – Any Class SA water body - Coastal	1.5°F; 1/Month/Grab[14]
	63. Maximum Change in Temperature in MA – Any Class SB water body - July to September	1.5°F; 1/Month/Grab[14]
	64. Maximum Change in Temperature in MA –Any Class SB water body - October to June	4°F; 1/Month/Grab[14]

Footnotes:

[1] Although the maximum values for TRC are 11ug/l and 7.5 ug/l for freshwater, and saltwater respectively, the compliance limits are equal to the minimum level (ML) of the test method used as listed in Appendix VI (i.e., Method 330.5, 20 ug/l).
[2] Limits for cyanide are based on EPA's water quality criteria expressed as micrograms per liter. There is currently no EPA approved test method for free cyanide. Therefore, total cyanide must be reported.

[3] Although the maximum values for cyanide are 5.2 ug/l and 1.0 ug/l for freshwater and saltwater, respectively, the compliance limits are equal to the minimum level (ML) of the Method 335.4 as listed in Appendix VI (i.e., 10 ug/l).
[4] BTEX = sum of Benzene, Toluene, Ethylbenzene, and total Xylenes.
[5] Naphthalene can be reported as both a purgeable (VOC) and extractable (SVOC) organic compound. If both VOC and SVOC are analyzed, the highest value must be used unless the QC criteria for one of the analyses is not met. In such cases, the value from the analysis meeting the QC criteria must be used.
[6] The sum of individual phthalate compounds(not including the #34, Bis (2-Ethylhexyl) Phthalate . The compliance limits are equal to the minimum level (ML) of the test method used as listed in Appendix VI.
Total values calculated for reporting on NOIs and discharge monitoring reports shall be calculated by adding the measured concentration of each constituent. If the measurement of a constituent is less than the ML, the permittee shall use a value of zero for that constituent. For each test, the permittee shall also attach the raw data for each constituent to the discharge monitoring report, including the minimum level and minimum detection level for the analysis.
[7] Although the maximum value for the individual PAH compounds is 0.0038 ug/l, the compliance limits are equal to the minimum level (ML) of the test method used as listed in Appendix VI.
[8] In the November 2002 WQC, EPA has revised the definition of Total PCBs for aquatic life as total PCBs is the sum of all homologue, all isomer, all congener, or all "Oroclor analyses."Total values calculated for reporting on NOIs and discharge monitoring reports shall be calculated by adding the measured concentration of each constituent. If the measure of a constituent is less than the ML, the permittee shall use a value of zero for that constituent. For each test, the permittee shall also attach the raw data for each constituent to the discharge monitoring report, including the minimum level and minimum detection level for the analysis.
[9]Although the maximum value for total PCBs is 0.000064 ug/l, the compliance limit is equal to the minimum level (ML) of the test method used as listed in Appendix VI (i.e., 0.5 ug/l for Method 608 or 0.00005 ug/l when Method 1668a is approved).
[10] Hardness. Cadmium, Chromium III, Copper, Lead, Nickel, Silver, and Zinc are Hardness Dependent.
[11] For a Dilution Factor (DF) from 1 to 5, metals limits are calculated using DF times the base limit for the metal. See Appendix IV. For example, iron limits are calculated using DF x 1,000ug/L (the iron base limit). Therefore DF is 1.5, the iron limit will be 1,500 ug/L; DF 2, then iron limit =1,000 x 2 =2,000 ug/L., etc. not to exceed the DF=5.
[12] Minimum Level (ML) is the lowest level at which the analytical system gives a recognizable signal and acceptable calibration point for the analyte. The ML represents the lowest concentration at which an analyte can be measured with a known level of confidence. The ML is calculated by multiplying the laboratory-determined method detection limit by 3.18 (see 40 CFR Part 136, Appendix B).
[13] pH sampling for compliance with permit limits may be performed using field methods as provided for in EPA test Method 150.1.
[14] Temperature sampling per Method 170.1

127 Hartwell Street, Suite 3
West Boylston, Massachusetts 01583
Tel: 774.450.7177
Fax: 888.835.0617
www.lrt-llc.net

March 5, 2012

U.S. Environmental Protection Agency—Region 1
5 Post Office Square, Suite 100
Mail Code OEP06-4
Boston, Massachusetts 02109-3912
Attn.: Remediation General Permit NOI Processing

Reference: Notice of Intent
NPDES Remediation General Permit
127 Hartwell Street
West Boylston, Massachusetts 01583
LRT Reference #2-1025

To whom it may concern:

On behalf of Con Edison, Inc. and Apex Companies, LLC (Apex), Lockwood Remediation Technologies, LLC (LRT) has prepared this Notice of Intent (NOI) for coverage under the National Pollutant Discharge Elimination System (NPDES) Remediation General Permit (RGP), Massachusetts General Permit (MAG910000). This NOI was prepared in accordance with the general requirements of the NPDES RGP under Federal Register, Vol. 70, No. 147, and related guidance documentation provided by the EPA. The completed NOI form is provided in Appendix A.

Site Information

This NOI has been prepared for the management of wastewater from the testing of an oil/water separator (OWS) at a one acre-parcel located in the rear of a property at 127 Hartwell Street in West Boylston, Massachusetts (the Site); please refer to Figure 1 Site Plan for a locus map and an overview of the immediate area surrounding the Site. The proposed work area is bounded by wetlands to the north and a variety of commercial and industrial properties to the east, west and south; please refer to Figure 2 Site Plan. Please note, that no work is to be performed within 100 feet of the wetlands.

Work Summary

The proposed work scope is the completion of a pilot test verifying the effectiveness of a 40,000 gallon capacity OWS manufactured by Highland Tank of Stoystown, PA. The pilot test is designed to simulate a variety of different types of potential releases to the OWS that may occur once this system is installed at numerous sites throughout the northeast. The controlled, simulated tests include release flow rates ranging between 1,500 and 4,200 gpm, with feed streams of oil concentrations ranging between clean groundwater to 10 mg/L Oil & Grease and total suspended solids (TSS) between actual background and 100 mg/L. All water utilized in the pilot test (estimated at 350,000 gallons) will be pumped from an existing supply well located at the Site. The TSS will be simulated using a virgin sand mixture based on samples provided by Con Edison. Oil used in the pilot test will be provided by Con Edison and is classified as a virgin oil Caltran 60-08.

Although the intent of testing is to simulate release scenarios, it is important to note that no oil is actually released. The OWS testing system and subsequent water treatment system will be completely contained as a closed system. Therefore, once the initial volume of water is pumped from the supply well, this water will be used for approximately 60 days of testing and then treated and reused for the next test. Only after it is verified that the water meets the discharge criteria of the Permit will the water be discharged to the outfall. Prior to discharge, the water will be treated by a wastewater treatment plant that will include settling tanks, filtration and granular activated carbon (See Figure 2 for the treatment system layout). Once the water is discharged, all test components utilized for both the pilot test and subsequent water treatment will be removed from the site.

Discharge and Receiving Surface Water Information

Based on analytical sampling conducted by LRT of the supply well located at the Site, there were no detectable concentrations of total petroleum hydrocarbon (TPH), volatile organic compounds (VOCs), semi-volatile organic compounds (SVOCs), total residual chlorine (TRC), cyanide and metals with the exception of arsenic. Influent arsenic concentrations were detected at 11.4 ug/L and are assumed to be associated with total suspended solids. Based on the ultimate receiving body being a wetland, no dilution criteria is applicable for the site. Based on the analytical sampling from the water supply well, only one metal (arsenic) currently exceeds the discharge criteria. These concentrations are naturally occurring in the formation and assumed to be associated with the TSS. The TSS will be significantly reduced via settling occurring in influent equalization tank and then by the filtration that will occur via the wastewater treatment plant provided.

Calculation of Dilution Criteria

No dilution calculation is applicable, due to the receiving water being a wetland.

Consultation with Federal Services

LRT reviewed online electronic data viewers and databases from the Massachusetts Geographical Information System (MassGIS) and the Massachusetts Division of Fisheries and Wildlife (MassWildlife; Natural Heritage and Endangered Species Program), and the U.S. National Parks Service Natural Historic Places (NPS). Based on this review, neither the Site nor the point where the proposed discharge reaches the receiving surface water body are Areas of Critical Environmental Concern (ACEC), Habitats of Rare Wetland Wildlife, Habitats of Rare Species or Estimated Habitats of Rare Wildlife or listed as a National Historic Place.

Coverage under NPDES RGP

It is our opinion that the proposed discharge is eligible for coverage under the NPDES RGP. On behalf of Con Edision and Apex, we are requesting coverage under the NPDES RGP for the discharge of wastewater during testing activities to the surface waters of the wetland to the north of the site that ultimately discharge to the Watchusett Reservoir.

The enclosed NOI form provides required information on the general site conditions, discharge, treatment system, receiving water, and consultation with federal services. For this project, D&S Realty is the owner and LRT has operational control over the construction plans and specifications, including the ability to make modifications to those plans and specifications.

Please feel free to contact us at 774-450-7177 or at plockwood@lrt-llc.net if you have any questions or if you require additional information.

Sincerely,
Lockwood Remediation Technologies, LLC

Paul Lockwood

Paul Lockwood
President

Attachments: Figure Y1 Locus and Site Plan
Figure Y2 Proposed System Layout
Appendix A – NOI Form
Appendix B – Best Management Practices Plan
Appendix C – Laboratory Data
Appendix D – MSDS Sheets

Figures

SITE LOCATION MAP

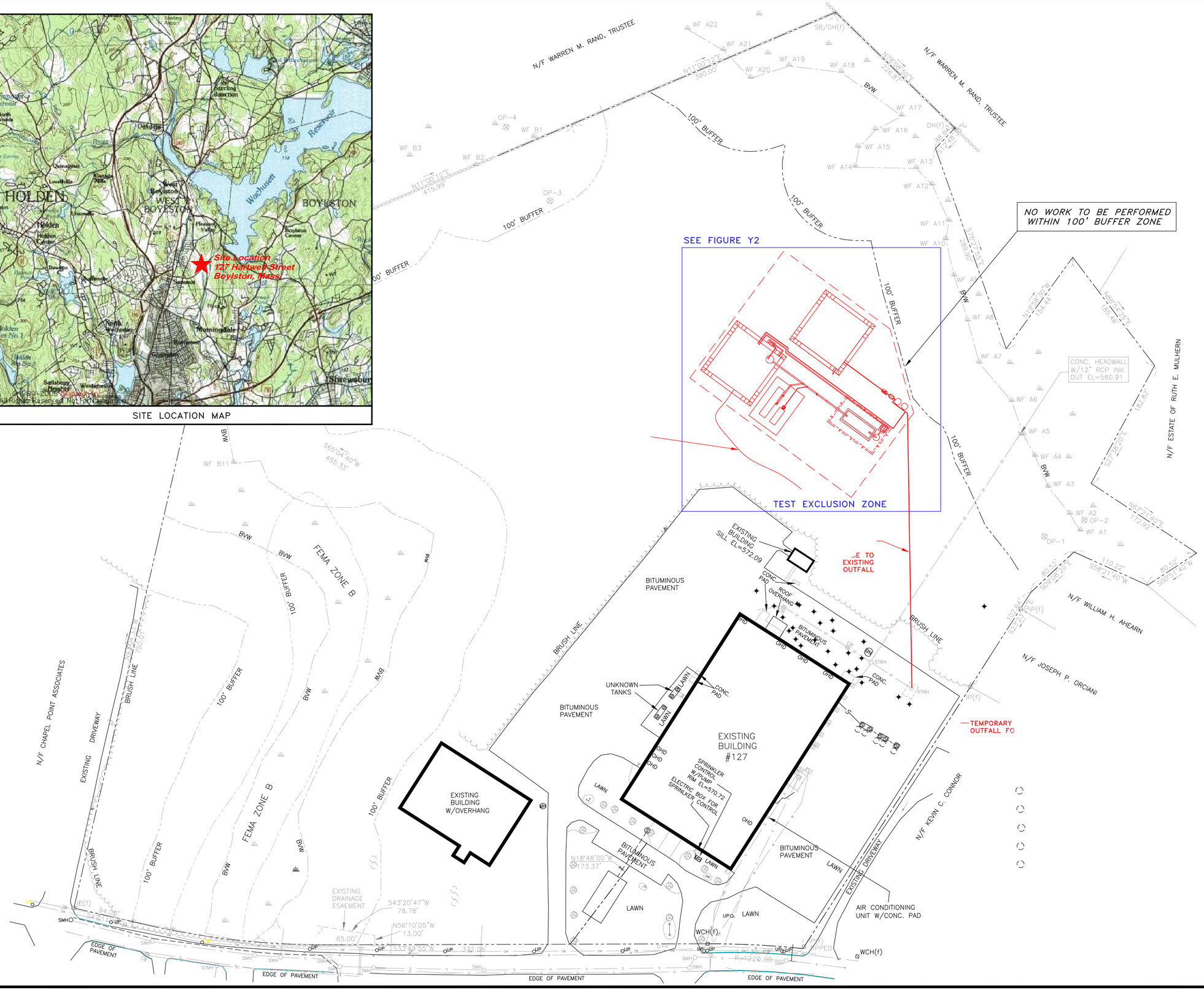

NO.	DATE	BY	REVISION

LEGEND

- WATER SUPPLY WELL
- MONITORING WELL
- WETLANDS MARKER
- 100 FT. WETLANDS BUFFER
- ST — UNDERGROUND SEWER LINE
- S — UNDERGROUND SEWER LINE
- OW — OVERHEAD WIRES
- E — UNDERGROUND ELECTRIC LINE
- G — UNDERGROUND GAS LINE
- MH — MANHOLE
- SMH — SEWER MANHOLE
- STMH — STORMWATER MANHOLE
- ROCK WALL
- FH — FIRE HYDRANT
- UP — UTILITY POLE

60 0 60 120
SCALE FEET

SIGNATURE	DATE
REVIEW ENGR:	
PROJECT ENGR:	
PROJECT MGR:	
CLIENT:	

APEX
120-D WILBUR PLACE, BOHEMIA, NY

CONSOLIDATED EDISON COMPANY OF NEW YORK

127 HARTWELL STREET
WEST BOYLSTON, MA

OIL WATER SEPARATOR TESTING SITE PLAN

DESIGNED BY: DJS	DETAILED BY: TRS	CHECKED BY:
DRAWING DATE: 12/23/11	ACAD FILE: 85248-Y1	
PROJECT NO.: 85248	CONTRACT:	
DRAWING: Y1	REVISION:	

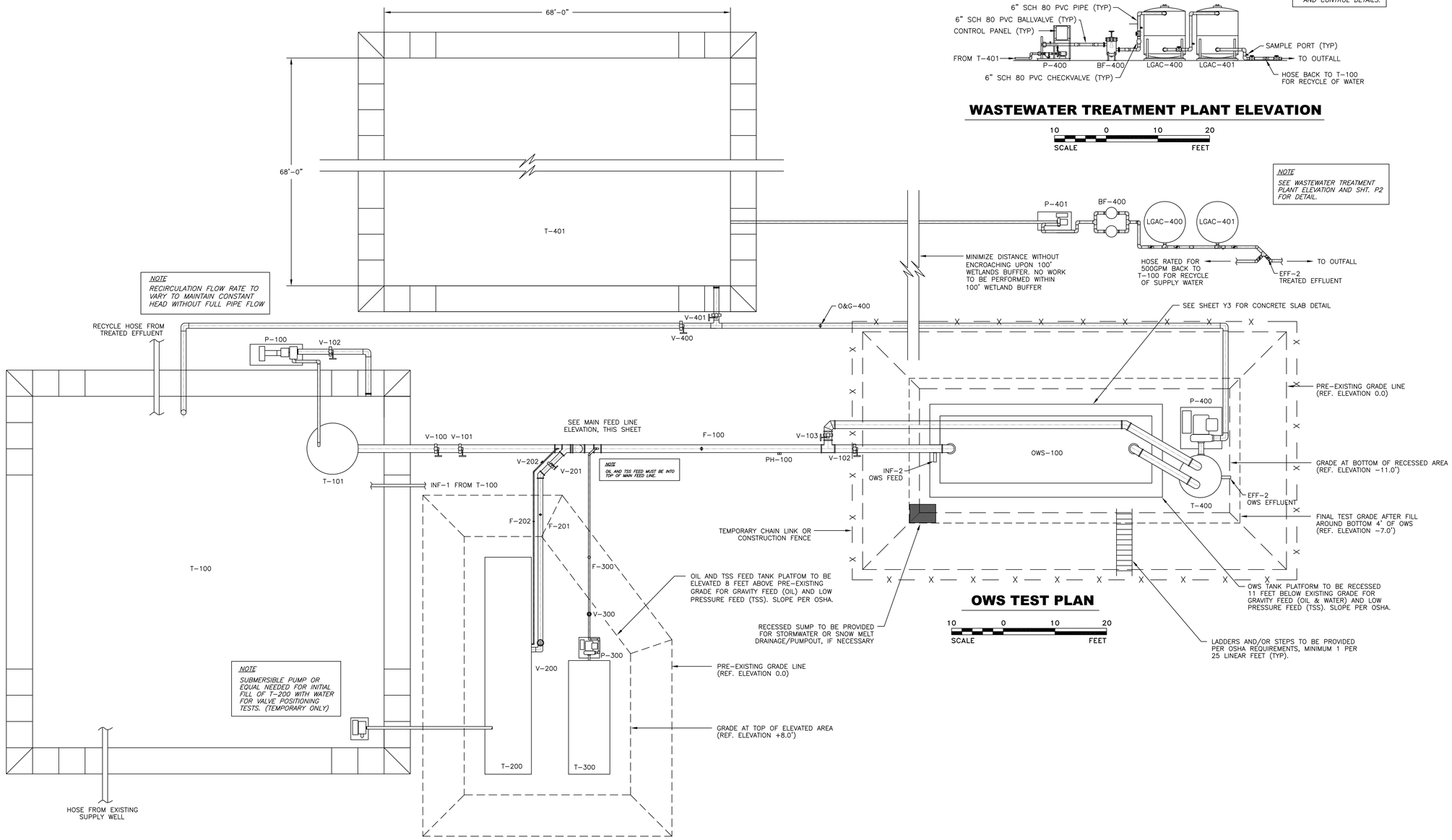

WASTEWATER TREATMENT PLANT ELEVATION

OWS TEST PLAN

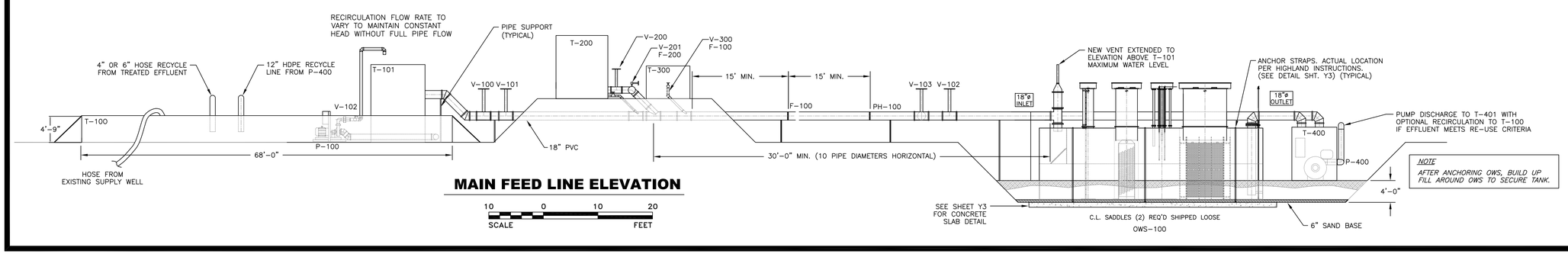

MAIN FEED LINE ELEVATION

NO.	DATE	BY	REVISION

NOTE

1) SEE SHT. P2 FOR PIPING, VALVE, PUMP, AND TANK/EQUIPMENT SPECIFICATION AND SCHEDULE.
2) NO SITE WORK TO BE PERFORMED WITHIN 100' WETLAND BUFFER FOR ANY REASON.
3) "OR EQUAL" EQUIPMENT SHALL BE PERMITTED WITH PRIOR WRITTEN APPROVAL OF APEX ONLY.
4) MEANS AND METHODS OF CONSTRUCTION ARE RESPONSIBILITY OF CONTRACTOR.
5) ALL ELEVATIONS TO BE OSHA COMPLIANT WITH RESPECT TO SLOPING, EGRESS, ETC.
6) INSTALLATION OF ALL UNITS TO BE IN ACCORDANCE WITH MANUFACTURERS RECOMMENDATIONS.
7) ELECTRICITY IS ONLY REQUIRED FOR P-300 AND CONTROLS AND TRANSMITTERS. ELECTRICITY TO BE PROVIDED BY GENERATORS WITH ON-SITE DIESEL SUPPLY.
8) DIESEL PUMPS HAVE ON-SITE DIESEL SUPPLY.
9) ELEVATION CHANGES ARE NOT TO BE MADE WITHOUT PRIOR WRITTEN APPROVAL OF APEX.
10) WINTERIZATION TO BE PROVIDED BY CONTRACTOR AS NEEDED, INCLUDING ANY ELECTRICAL NEEDS.

10 0 10 20
SCALE FEET

SIGNATURE	DATE
REVIEW ENGR:	
PROJECT ENGR:	
PROJECT MGR:	
CLIENT:	

APEX

120-D WILBUR PLACE, BOHEMIA, NY

CONSOLIDATED EDISON OF NEW YORK OIL WATER SEPARATOR TESTING

127 HARTWELL STREET
WEST BOYLSTON, MA

OIL WATER SEPARATOR TESTING PLANS AND ELEVATIONS

DESIGNED BY:	DETAILED BY:	CHECKED BY:
DS	TS	

DRAWING DATE: 12/23/11	ACAD FILE: 85248-Y2
PROJECT NO.: CON ED OWS	CONTRACT:
DRAWING: Y2	REVISION:

Appendix A
NOI Form

B. Suggested Form for Notice of Intent (NOI) for the Remediation General Permit

1. General facility/site information. Please provide the following information about the site:

a) Name of **facility/site**: Hartwell Business Park		**Facility/site** mailing address:			
Location of **facility/site**: longitude: 42.3394 latitude: -71.7752	Facility SIC code(s): 1799	Street: 127 Hartwell Street			
b) Name of **facility/site owner:**		Town: West Boylston			
Email address of facility/site owner: SMigridichian@cea-inc.com		State: Massachusetts	Zip: 01583	County: Worcester	
Telephone no. of facility/site **owner**: 508-962-1031					
Fax no. of facility/site **owner**:		**Owner** is (check one): 1. Federal__○__ 2. State/Tribal__○__ 3. Private __⊙__ 4. Other __○__ if so, describe:			
Address of **owner** (if different from site):					
Street:					
Town:	State:	Zip:	County:		
c) Legal name of **operator**: Lockwood Remediation Technology, LLC	**Operator** telephone no: 774-450-7177				
	Operator fax no.: 888-835-0617	**Operator** email: plockwood@lrt-llc.net			
Operator contact name and title: Paul Lockwood - President					
Address of **operator** (if different from owner):	Street: 127 Hartwell Street, Suite 3				
Town: West Boylston	State: MA	Zip: 01583	County: Worcester		

d) Check Y for "yes" or N for "no" for the following:
1. Has a prior NPDES permit exclusion been granted for the discharge? Y_____ N_____, if Y, number:_____
2. Has a prior NPDES application (Form 1 & 2C) ever been filed for the discharge?
Y_____ N_____, if Y, date and tracking #:_____
3. Is the discharge a "new discharge" as defined by 40 CFR 122.2? Y_____ N_____
4. For sites in Massachusetts, is the discharge covered under the Massachusetts Contingency Plan (MCP) and exempt from state permitting? Y_____ N_____

e) Is site/facility subject to any State permitting, license, or other action which is causing the generation of discharge? Y_____ N_____
If Y, please list:
1. site identification # assigned by the state of NH or MA:_____
2. permit or license # assigned:_____
3. state agency contact information: name, location, and telephone number:

Massachusetts Department of Environmental Protection
Central Office
627 Main Street, Worcester, MA, 01608

f) Is the site/facility covered by any other EPA permit, including:
1. Multi-Sector General Permit? Y_____ N_____,
if Y, number:_____
2. Final Dewatering General Permit? Y_____ N_____,
if Y, number:_____
3. EPA Construction General Permit? Y_____ N_____,
if Y, number:_____
4. Individual NPDES permit? Y_____ N_____,
if Y, number:_____
5. any other water quality related individual or general permit? Y_____ N_____, if Y, number:_____

g) Is the site/facility located within or does it discharge to an Area of Critical Environmental Concern (ACEC)? Y_____ N_____

h) Based on the facility/site information and any historical sampling data, identify the sub-category into which the potential discharge falls.

Activity Category	**Activity Sub-Category**
I - Petroleum Related Site Remediation	A. Gasoline Only Sites _____ B. Fuel Oils and Other Oil Sites (including Residential Non-Business Remediation Discharges) _____ C. Petroleum Sites with Additional Contamination _____
II - Non Petroleum Site Remediation	A. Volatile Organic Compound (VOC) Only Sites _____ B. VOC Sites with Additional Contamination _____ C. Primarily Heavy Metal Sites _____
III - Contaminated Construction Dewatering	A. General Urban Fill Sites _____ B. Known Contaminated Sites _____

IV - Miscellaneous Related Discharges	A. Aquifer Pump Testing to Evaluate Formerly Contaminated Sites ☐ B. Well Development/Rehabilitation at Contaminated/Formerly Contaminated Sites ☐ C. Hydrostatic Testing of Pipelines and Tanks ☒ D. Long-Term Remediation of Contaminated Sumps and Dikes ☐ E. Short-term Contaminated Dredging Drain Back Waters (if not covered by 401/404 permit) ☐

2. Discharge information. Please provide information about the discharge, (attaching additional sheets as necessary) including:

a) Describe the discharge activities for which the owner/applicant is seeking coverage:

Discharge of water recovered from water supply well used for oil/water separator pilot test.

b) Provide the following information about each discharge:

1) Number of discharge points: 1

2) What is the **maximum** and **average flow rate** of discharge (in cubic feet per second, ft^3/s)?
Max. flow 0.669 Is maximum flow a **design value**? Y ◉ N ○
Average flow (include units) 0.05 Is average flow a design value or estimate? Design

3) Latitude and longitude of each discharge within 100 feet:

pt.1: lat 42.3402	long -71.7746	pt.2: lat.	long. ;
pt.3: lat	long	pt.4: lat.	long. ;
pt.5: lat	long	pt.6: lat.	long. ;
pt.7: lat	long	pt.8: lat.	long. ; etc.

4) If hydrostatic testing, total volume of the discharge (gals): 350,000

5) Is the discharge intermittent ◉ or seasonal ○ ?
Is discharge ongoing? Y ○ N ◉

c) Expected dates of discharge (mm/dd/yy): start March 19, 2012 end May 30, 2012

d) Please attach a line drawing or flow schematic showing water flow through the facility including:
1. sources of intake water, 2. contributing flow from the operation, 3. treatment units, and 4. discharge points and receiving waters(s). See attached Figures Y1 and Y2.

3. Contaminant information.

a) Based on the sub-category selected (see Appendix III), indicate whether each listed chemical is **believed present** or **believed absent** in the potential discharge. Attach additional sheets as needed.

Parameter *	CAS Number	Believed Absent	Believed Present	# of Samples	Sample Type (e.g., grab)	Analytical Method Used (method #)	Minimum Level (ML) of Test Method	Maximum daily value		Average daily value	
								concentration (ug/l)	mass (kg)	concentration (ug/l)	mass (kg)
1. Total Suspended Solids (TSS)		☐	☒	1	Grab						
2. Total Residual Chlorine (TRC)		☒	☐	1	Grab						
3. Total Petroleum Hydrocarbons (TPH)		☒	☐	1	Grab						
4. Cyanide (CN)	57125	☒	☐	1	Grab						
5. Benzene (B)	71432	☒	☐	1	Grab						
6. Toluene (T)	108883	☒	☐	1	Grab						
7. Ethylbenzene (E)	100414	☒	☐	1	Grab						
8. (m,p,o) Xylenes (X)	108883; 106423; 95476; 1330207	☒	☐	1	Grab						
9. Total BTEX [2]	n/a	☒	☐	1	Grab						
10. Ethylene Dibromide (EDB) (1,2-Dibromoethane) [3]	106934	☒	☐	1	Grab						
11. Methyl-tert-Butyl Ether (MtBE)	1634044	☒	☐	1	Grab						
12. tert-Butyl Alcohol (TBA) (Tertiary-Butanol)	75650	☒	☐	1	Grab						

***** Numbering system is provided to allow cross-referencing to Effluent Limits and Monitoring Requirements by Sub-Category included in Appendix III, as well as the Test Methods and Minimum Levels associated with each parameter provided in Appendix VI.

[2] BTEX = Sum of Benzene, Toluene, Ethylbenzene, total Xylenes.

[3] EDB is a groundwater contaminant at fuel spill and pesticide application sites in New England.

Parameter *	CAS Number	Believed Absent	Believed Present	# of Samples	Sample Type (e.g., grab)	Analytical Method Used (method #)	Minimum Level (ML) of Test Method	Maximum daily value		Average daily value	
								concentration (ug/l)	mass (kg)	concentration (ug/l)	mass (kg)
13. tert-Amyl Methyl Ether (TAME)	9940508	☒	☐	1	Grab						
14. Naphthalene	91203	☒	☐	1	Grab						
15. Carbon Tetrachloride	56235	☒	☐	1	Grab						
16. 1,2 Dichlorobenzene (o-DCB)	95501	☒	☐	1	Grab						
17. 1,3 Dichlorobenzene (m-DCB)	541731	☒	☐	1	Grab						
18. 1,4 Dichlorobenzene (p-DCB)	106467	☒	☐	1	Grab						
18a. Total dichlorobenzene		☒	☐	1	Grab						
19. 1,1 Dichloroethane (DCA)	75343	☒	☐	1	Grab						
20. 1,2 Dichloroethane (DCA)	107062	☒	☐	1	Grab						
21. 1,1 Dichloroethene (DCE)	75354	☒	☐	1	Grab						
22. cis-1,2 Dichloroethene (DCE)	156592	☒	☐	1	Grab						
23. Methylene Chloride	75092	☒	☐	1	Grab						
24. Tetrachloroethene (PCE)	127184	☒	☐	1	Grab						
25. 1,1,1 Trichloro-ethane (TCA)	71556	☒	☐	1	Grab						
26. 1,1,2 Trichloro-ethane (TCA)	79005	☒	☐	1	Grab						
27. Trichloroethene (TCE)	79016	☒	☐	1	Grab						

Parameter *	CAS Number	Believed Absent	Believed Present	# of Samples	Sample Type (e.g., grab)	Analytical Method Used (method #)	Minimum Level (ML) of Test Method	Maximum daily value		Average daily value	
								concentration (ug/l)	mass (kg)	concentration (ug/l)	mass (kg)
28. Vinyl Chloride (Chloroethene)	75014	☒	☐	1	Grab						
29. Acetone	67641	☒	☐	1	Grab						
30. 1,4 Dioxane	123911	☒	☐	1	Grab						
31. Total Phenols	108952	☒	☐	1	Grab						
32. Pentachlorophenol (PCP)	87865	☒	☐	1	Grab						
33. Total Phthalates (Phthalate esters) [4]		☒	☐	1	Grab						
34. Bis (2-Ethylhexyl) Phthalate [Di-(ethylhexyl) Phthalate]	117817	☒	☐	1	Grab						
35. Total Group I Polycyclic Aromatic Hydrocarbons (PAH)		☒	☐								
a. Benzo(a) Anthracene	56553	☒	☐	1	Grab						
b. Benzo(a) Pyrene	50328	☒	☐	1	Grab						
c. Benzo(b)Fluoranthene	205992	☒	☐	1	Grab						
d. Benzo(k)Fluoranthene	207089	☒	☐	1	Grab						
e. Chrysene	21801	☒	☐	1	Grab						
f. Dibenzo(a,h)anthracene	53703	☒	☐	1	Grab						
g. Indeno(1,2,3-cd) Pyrene	193395	☒	☐	1	Grab						
36. Total Group II Polycyclic Aromatic Hydrocarbons (PAH)		☒	☐								

[4] The sum of individual phthalate compounds.

Parameter *	CAS Number	Believed Absent	Believed Present	# of Samples	Sample Type (e.g., grab)	Analytical Method Used (method #)	Minimum Level (ML) of Test Method	Maximum daily value		Average daily value	
								concentration (ug/l)	mass (kg)	concentration (ug/l)	mass (kg)
h. Acenaphthene	83329	☒	☐	1	Grab						
i. Acenaphthylene	208968	☒	☐	1	Grab						
j. Anthracene	120127	☒	☐	1	Grab						
k. Benzo(ghi) Perylene	191242	☒	☐	1	Grab						
l. Fluoranthene	206440	☒	☐	1	Grab						
m. Fluorene	86737	☒	☐	1	Grab						
n. Naphthalene	91203	☒	☐	1	Grab						
o. Phenanthrene	85018	☒	☐	1	Grab						
p. Pyrene	129000	☒	☐	1	Grab						
37. Total Polychlorinated Biphenyls (PCBs)	85687; 84742; 117840; 84662; 131113; 117817.	☒	☐								
38. Chloride	16887006	☒	☐	1	Grab						
39. Antimony	7440360	☒	☐								
40. Arsenic	7440382	☐	☒	1	Grab						
41. Cadmium	7440439	☒	☐	1	Grab						
42. Chromium III (trivalent)	16065831	☒	☐	1	Grab						
43. Chromium VI (hexavalent)	18540299	☒	☐	1	Grab						
44. Copper	7440508	☒	☐								
45. Lead	7439921	☒	☐	1	Grab						
46. Mercury	7439976	☒	☐								
47. Nickel	7440020	☒	☐	1	Grab						
48. Selenium	7782492	☒	☐								
49. Silver	7440224	☒	☐								
50. Zinc	7440666	☒	☐	1	Grab						
51. Iron	7439896	☒	☐	1	Grab						
Other (describe):		☐	☐								

Parameter *	CAS Number	Believed Absent	Believed Present	# of Samples	Sample Type (e.g., grab)	Analytical Method Used (method #)	Minimum Level (ML) of Test Method	Maximum daily value		Average daily value	
								concentration (ug/l)	mass (kg)	concentration (ug/l)	mass (kg)
		☐	☐								
		☐	☐								

b) For discharges where **metals** are believed present, please fill out the following (attach results of any calculations):

Step 1: Do any of the metals in the influent exceed the effluent limits in Appendix III (i.e., the limits set at zero dilution)? Y_⊙_ N_○_	If yes, which metals? Arsenic
Step 2: For any metals which exceed the **Appendix III** limits, calculate the **dilution factor (DF)** using the formula in Part I.A.3.c (step 2) of the NOI instructions or as determined by the State prior to the submission of this NOI. What is the dilution factor for applicable metals? Metal: Arsenic DF: 1-5 Metal: DF: Metal: DF: Metal: DF: Etc.	Look up the limit calculated at the corresponding dilution factor in **Appendix IV.** Do any of the metals in the **influent** have the potential to exceed the corresponding **effluent** limits in Appendix IV (i.e., is the influent concentration above the limit set at the calculated dilution factor)? Y_⊙_ N_○_ If Y, list which metals: Arsenic (Standard of 10 ppb and detected concentrations of 11.4 ppb)

4. Treatment system information. Please describe the treatment system using separate sheets as necessary, including:

a) A description of the treatment system, including a schematic of the proposed or existing treatment system:

See attached figure.

b) Identify each applicable treatment unit (check all that apply):	Frac. tank ☐	Air stripper ☐	Oil/water separator ☐	Equalization tanks ☒	Bag filter ☒	GAC filter ☒
	Chlorination ☐	De-chlorination ☐	Other (please describe):			

c) Proposed **average** and **maximum flow rates** (gallons per minute) for the discharge and the **design flow rate**(s) (gallons per minute) of the treatment system:
Average flow rate of discharge 25 gpm Maximum flow rate of treatment system 300 gpm
Design flow rate of treatment system 300 gpm

d) A description of chemical additives being used or planned to be used (attach MSDS sheets):

Caltran 60-08
Sand

5. Receiving surface water(s). Please provide information about the receiving water(s), using separate sheets as necessary:

a) Identify the discharge pathway:	Direct to receiving water_☐__	Within facility (sewer) _☐__	Storm drain_☒__	Wetlands ☐	Other (describe):

b) Provide a narrative description of the discharge pathway, including the name(s) of the receiving waters:
Discharge out fall to storm drain which discharges to wetland to the north which discharges to the Watchusett Reservoir

c) Attach a detailed map(s) indicating the site location and location of the outfall to the receiving water:
1. For multiple discharges, number the discharges sequentially.
2. For indirect dischargers, indicate the location of the discharge to the indirect conveyance and the discharge to surface water
The map should also include the location and distance to the nearest sanitary sewer as well as the locus of nearby sensitive receptors (based on USGS topographical mapping), such as surface waters, drinking water supplies, and wetland areas.

d) Provide the state water quality classification of the receiving water A

e) Provide the reported or calculated seven day-ten year low flow (7Q10) of the receiving water N/A cfs
Please attach any calculation sheets used to support stream flow and dilution calculations.

f) Is the receiving water a listed 303(d) water quality impaired or limited water? Y_○__ N_⊙__ If yes, for which pollutant(s)?

Is there a final TMDL? Y_○__ N_⊙__ If yes, for which pollutant(s)?

6. ESA and NHPA Eligibility.

Please provide the following information according to requirements of Permit Parts I.A.4 and I.A.5 Appendices II and VII.

a) Using the instructions in Appendix VII and information on Appendix II, under which criterion listed in Part I.C are you eligible for coverage under this general permit?

A ___ B ___ C ___ D ___ E ___ F ___

b) If you selected Criterion D or F, has consultation with the federal services been completed? Y___ N___ Underway___

c) If consultation with U.S. Fish and Wildlife Service and/or NOAA Fisheries Service was completed, was a written concurrence finding that the discharge is "not likely to adversely affect" listed species or critical habitat received? Y___ N___

d) Attach documentation of ESA eligibility as described in the NOI instructions and required by Appendix VII, Part I.C, Step 4.

e) Using the instructions in Appendix VII, under which criterion listed in Part II.C are you eligible for coverage under this general permit?

1 ___ 2 ___ 3 ___

f) If Criterion 3 was selected, attach all written correspondence with the State or Tribal historic preservation officers, including any terms and conditions that outline measures the applicant must follow to mitigate or prevent adverse effects due to activities regulated by the RGP.

7. Supplemental information.

Please provide any supplemental information. Attach any analytical data used to support the application. Attach any certification(s) required by the general permit.

8. Signature Requirements: The Notice of Intent must be signed by the operator in accordance with the signatory requirements of 40 CFR Section 122.22, including the following certification:

I certify under penalty of law that this document and all attachments were prepared under my direction or supervision in accordance with a system designed to assure that qualified personnel properly gather and evaluate the information submitted. Based on my inquiry of the person or persons who manage the system, or those persons directly responsible for gathering the information, I certify that the information submitted is, to the best of my knowledge and belief, true, accurate, and complete. I certify that I am aware that there are significant penalties for submitting false information, including the possibility of fine and imprisonment for knowing violations.

Facility/Site Name:	127 Hartwell Street, West Boylston, MA 01583
Operator signature:	
Printed Name &Title:	Paul Lockwood, President
Date:	3/5/12

Appendix B
Best Management Practices Plan

127 Hartwell Street, Suite 3
West Boylston, Massachusetts 01583
Tel: 774.450.7177
Fax: 888.835.0617
www.lrt-llc.net

BEST MANAGEMENT PRACTICES PLAN

National Pollutant Discharge Elimination System – Remediation General Permit

Temporary Construction Dewatering

127 Hartwell Street – West Boylston, Massachusetts

A Notice of Intent (NOI) for a Remediation General Permit (RGP) under the National Pollutant Discharge Elimination System (NPDES) has been submitted to the US Environmental Protection Agency (EPA) on behalf of Con Edison, Inc. and Apex Companies, LLC (Apex) by Lockwood Remediation Technologies, LLC (LRT) for the above referenced site (the Site). This Best Management Practices Plan (BMPP) was prepared in accordance with the general requirements of the NPDES RGP, and related guidance documentation provided by the EPA. The BMPP is included as an Appendix to the NOI and will be posted at the Site during the time of the work as specified in the NOI.

Water Treatment Management

All water utilized in the pilot test (estimated at 350,000 gallons) will be pumped from a supply well located at the Site. The OWS testing system and subsequent water treatment system will be completely contained as a closed system. Therefore, once the initial volume of water is pumped from the supply well, this water will be used for approximately 60 days of testing and then treated and reused for the next test. Under ideal testing conditions all water will be reused until the testing is complete at which time the final volume of water will be discharged to the outfall. Prior to discharge, the water will be treated by a wastewater treatment plant that will include settling tanks, filtration, and granular activated carbon (See Figure 2 for the treatment system layout). Once the water is discharged, all test components utilized for both the pilot test and subsequent water treatment will be removed from the site.

Discharge Monitoring and Compliance

Regular sampling and testing will be conducted at the treated effluent as required by the RGP. This includes chemical testing required within the first month of discharging and the monthly testing to be conducted through the end of the scheduled discharge. The pilot system and proposed treatment system will have full-time operators during operation and maintenance (O&M) of the treatment system. Typical O&M procedures include checking the treatment system to insure peak performance, assessing the need for treatment system adjustments based on monitoring data, observing and recording the daily flow rates and discharge quantities and verifying the flow path of the discharged effluent.

The total monthly flow discharged will be monitored with a non-resettable flow meter and totalizer installed in the discharge line. Flow will be maintained below the system designed flow rate by monitoring the flow rate and if necessary adjusting the flow rate of the treatment system. Monthly monitoring reports will be compiled and maintained at the Site.

Management of Treatment System Materials

Any material used in the treatment system requiring disposal, will be collected and disposed to an appropriate receiving facility. This includes any sediment collected in the equalization tanks, which will be characterized and disposed of as soil to an appropriate receiving facility. Granular activated carbon (GAC) is another material that will require management of the project. Typically the used GAC is characterized and sent to a GAC recycling facility.

Appendix C
Laboratory Data

ANALYTICAL REPORT

Tuesday, January 17, 2012

GeoLabs, Inc.
45 Johnson Lane
Braintree MA 02184
Tele: 781 848 7844
Fax: 781 848 7811

Paul Lockwood
LRT, LLC
127 Hartwell Street, Suite 3
W. Boylston, MA 01583

TEL: (774) 450-7177
FAX:

Project: 2-1025
Location: OWS

Order No.: 1111292

Dear Paul Lockwood:

GeoLabs, Inc. received 1 sample(s) on 11/28/2011 for the analyses presented in the following report.

The laboratory results in this report relate only to samples submitted.

This report is being re-issued with full list 8260 results. All data for associated QC met method or laboratory specifications, except when noted in the Case Narrative.

If you have any questions regarding these tests results, please feel free to call.

Sincerely,

David Mick
Laboratory Director

For current certifications, please visit our website at www.geolabs.com
Certifications:
CT (PH-0148) - MA (M-MA015) - ME (MA0015) - NH (2508) - NJ (MA009) - RI (LA000252)
Accredited in Accordance with NELAC

Date: *17-Jan-12*

CLIENT: LRT, LLC
Project: 2-1025
Lab Order: 1111292

CASE NARRATIVE

Physical Condition of Samples

The project was received by the laboratory in satisfactory condition. The sample(s) were received undamaged, in appropriate containers with the correct preservation.

Project Documentation

The project was accompanied by satisfactory Chain of Custody documentation.

Analysis of Sample(s)

All extractable samples were extracted and analyzed and any Volatile samples were analyzed within method specified holding times and according to GeoLabs documented Standard Operating Procedure. No analytical anomalies or non-conformances were noted by the laboratory during the processing of these samples.

SIGNATURE: LAB DIRECTOR

PRINTED NAME: David Mick DATE: January 17, 2012

ANALYTICAL REPORT

Reissue Date: *17-Jan-12*
Original Reported Date: 09-Dec-11

CLIENT: LRT, LLC
Project: 2-1025
Lab Order: 1111292

Lab ID: 1111292-001
Client Sample ID: OWS 112811
Collection Date: 11/28/2011 1:00:00 PM
Matrix: GROUNDWATER

Analyses	Result	Det. Limit	Qual	Units	DF	Date Analyzed
NON-POLAR 1664A - E1664A						Analyst: **Admir**
Prep Method:		**Prep Date:**				
Total Petroleum Hydrocarbons	ND	5.00		mg/L	1	12/5/2011
TOTAL SUSPENDED SOLIDS - SM2540D						Analyst: **Admir**
Prep Method:		**Prep Date:**				
Total Suspended Solids	ND	4.00		mg/L	1	12/1/2011
TOTAL METALS BY GFAA - E200.9						Analyst: **QS**
Prep Method: (SW3545A)		**Prep Date:**				
Arsenic	*0.0114*	0.00100		mg/L	1	12/2/2011
TOTAL METALS BY ICP - SW6010B						Analyst: **QS**
Prep Method: (SW3010A)		**Prep Date:** 12/2/2011 2:18:39 PM				
Cadmium	ND	0.00400		mg/L	1	12/1/2011
Chromium	ND	0.0700		mg/L	1	12/1/2011
Iron	ND	0.0600		mg/L	1	12/1/2011
Nickel	ND	0.100		mg/L	1	12/1/2011
Zinc	ND	0.180		mg/L	1	12/1/2011
SEMIVOLATILE ORGANICS - SW8270C						Analyst: **ZYZ**
Prep Method: (SW3510)		**Prep Date:** 11/30/2011 2:31:33 PM				
1,2,4-Trichlorobenzene	ND	1.01		µg/L	1	11/30/2011 4:58:00 PM
1,2-Dichlorobenzene	ND	1.01		µg/L	1	11/30/2011 4:58:00 PM
1,2-Dinitrobenzene	ND	1.01		µg/L	1	11/30/2011 4:58:00 PM
1,3-Dichlorobenzene	ND	1.01		µg/L	1	11/30/2011 4:58:00 PM
1,3-Dinitrobenzene	ND	2.53		µg/L	1	11/30/2011 4:58:00 PM
1,4-Dichlorobenzene	ND	1.01		µg/L	1	11/30/2011 4:58:00 PM
1,4-Dinitrobenzene	ND	2.53		µg/L	1	11/30/2011 4:58:00 PM

Qualifiers:

B	Analyte detected in the associated Method Blank	BRL	Below Reporting Limit
E	Value above quantitation range	H	Holding times for preparation or analysis exceeded
J	Analyte detected below quantitation limits	ND	Not Detected at the Reporting Limit
S	Spike Recovery outside recovery limits		

GeoLabs, Inc.
45 Johnson Lane ~ Braintree MA 02184 ~ 781 848 7844 ~ 781 848 7811

ANALYTICAL REPORT

Reissue Date: *17-Jan-12*
Original Reported Date: 09-Dec-11

CLIENT: LRT, LLC
Project: 2-1025

Lab Order: 1111292

SEMIVOLATILE ORGANICS - SW8270C

Analyst: **ZYZ**

Prep Method: (SW3510) **Prep Date:** 11/30/2011 2:31:33 PM

2,3,4,6-Tetrachlorophenol	ND	1.01	µg/L	1	11/30/2011 4:58:00 PM
2,4,5-Trichlorophenol	ND	1.01	µg/L	1	11/30/2011 4:58:00 PM
2,4,6-Trichlorophenol	ND	1.01	µg/L	1	11/30/2011 4:58:00 PM
2,4-Dichlorophenol	ND	1.01	µg/L	1	11/30/2011 4:58:00 PM
2,4-Dimethylphenol	ND	1.01	µg/L	1	11/30/2011 4:58:00 PM
2,4-Dinitrophenol	ND	5.05	µg/L	1	11/30/2011 4:58:00 PM
2,4-Dinitrotoluene	ND	1.01	µg/L	1	11/30/2011 4:58:00 PM
2,6-Dinitrotoluene	ND	1.01	µg/L	1	11/30/2011 4:58:00 PM
2-Chloronaphthalene	ND	1.01	µg/L	1	11/30/2011 4:58:00 PM
2-Chlorophenol	ND	1.01	µg/L	1	11/30/2011 4:58:00 PM
2-Methylnaphthalene	ND	1.01	µg/L	1	11/30/2011 4:58:00 PM
2-Methylphenol	ND	1.01	µg/L	1	11/30/2011 4:58:00 PM
2-Nitroaniline	ND	1.01	µg/L	1	11/30/2011 4:58:00 PM
2-Nitrophenol	ND	1.01	µg/L	1	11/30/2011 4:58:00 PM
3,3´-Dichlorobenzidine	ND	1.01	µg/L	1	11/30/2011 4:58:00 PM
3-Methylphenol/4-Methylphenol	ND	1.01	µg/L	1	11/30/2011 4:58:00 PM
3-Nitroaniline	ND	1.01	µg/L	1	11/30/2011 4:58:00 PM
4,6-Dinitro-2-Methylphenol	ND	5.05	µg/L	1	11/30/2011 4:58:00 PM
4-Bromophenyl Phenyl Ether	ND	1.01	µg/L	1	11/30/2011 4:58:00 PM
4-Chloro-3-Methylphenol	ND	1.01	µg/L	1	11/30/2011 4:58:00 PM
4-Chloroaniline	ND	2.53	µg/L	1	11/30/2011 4:58:00 PM
4-Chlorophenyl Phenyl Ether	ND	1.01	µg/L	1	11/30/2011 4:58:00 PM
4-Nitroaniline	ND	1.01	µg/L	1	11/30/2011 4:58:00 PM
4-Nitrophenol	ND	1.01	µg/L	1	11/30/2011 4:58:00 PM
Acenaphthene	ND	1.01	µg/L	1	11/30/2011 4:58:00 PM
Acenaphthylene	ND	1.01	µg/L	1	11/30/2011 4:58:00 PM
Acetophenone	ND	1.01	µg/L	1	11/30/2011 4:58:00 PM
Aniline	ND	5.05	µg/L	1	11/30/2011 4:58:00 PM
Anthracene	ND	1.01	µg/L	1	11/30/2011 4:58:00 PM
Azobenzene	ND	5.05	µg/L	1	11/30/2011 4:58:00 PM
Benz(a)Anthracene	ND	0.101	µg/L	1	11/30/2011 4:58:00 PM
Benzidine	ND	5.05	µg/L	1	11/30/2011 4:58:00 PM
Benzo(a)Pyrene	ND	0.101	µg/L	1	11/30/2011 4:58:00 PM
Benzo(b)Fluoranthene	ND	0.101	µg/L	1	11/30/2011 4:58:00 PM
Benzo(g,h,i)Perylene	ND	1.01	µg/L	1	11/30/2011 4:58:00 PM
Benzo(k)Fluoranthene	ND	0.101	µg/L	1	11/30/2011 4:58:00 PM
Benzyl Alcohol	ND	1.01	µg/L	1	11/30/2011 4:58:00 PM
Bis(2-Chloroethoxy)Methane	ND	1.01	µg/L	1	11/30/2011 4:58:00 PM
Bis(2-Chloroethyl)Ether	ND	1.01	µg/L	1	11/30/2011 4:58:00 PM

Qualifiers:

B	Analyte detected in the associated Method Blank	BRL	Below Reporting Limit
E	Value above quantitation range	H	Holding times for preparation or analysis exceeded
J	Analyte detected below quantitation limits	ND	Not Detected at the Reporting Limit
S	Spike Recovery outside recovery limits		

CLIENT: LRT, LLC
Project: 2-1025
Lab Order: 1111292

SEMIVOLATILE ORGANICS - SW8270C

Analyst: **ZYZ**

Prep Method: (SW3510) **Prep Date:** 11/30/2011 2:31:33 PM

Bis(2-Chloroisopropyl)Ether	ND	1.01	µg/L	1	11/30/2011 4:58:00 PM
Bis(2-Ethylhexyl)Phthalate	ND	2.02	µg/L	1	11/30/2011 4:58:00 PM
Butyl Benzyl Phthalate	ND	1.01	µg/L	1	11/30/2011 4:58:00 PM
Carbazole	ND	1.01	µg/L	1	11/30/2011 4:58:00 PM
Chrysene	ND	1.01	µg/L	1	11/30/2011 4:58:00 PM
Dibenz(a,h)Anthracene	ND	0.101	µg/L	1	11/30/2011 4:58:00 PM
Dibenzofuran	ND	1.01	µg/L	1	11/30/2011 4:58:00 PM
Diethyl Phthalate	ND	1.01	µg/L	1	11/30/2011 4:58:00 PM
Dimethyl Phthalate	ND	1.01	µg/L	1	11/30/2011 4:58:00 PM
Di-n-Butyl Phthalate	ND	1.01	µg/L	1	11/30/2011 4:58:00 PM
Di-n-Octyl Phthalate	ND	1.01	µg/L	1	11/30/2011 4:58:00 PM
Fluoranthene	ND	1.01	µg/L	1	11/30/2011 4:58:00 PM
Fluorene	ND	1.01	µg/L	1	11/30/2011 4:58:00 PM
Hexachlorobenzene	ND	2.53	µg/L	1	11/30/2011 4:58:00 PM
Hexachlorobutadiene	ND	2.53	µg/L	1	11/30/2011 4:58:00 PM
Hexachlorocyclopentadiene	ND	5.05	µg/L	1	11/30/2011 4:58:00 PM
Hexachloroethane	ND	1.01	µg/L	1	11/30/2011 4:58:00 PM
Indeno(1,2,3-cd)Pyrene	ND	0.101	µg/L	1	11/30/2011 4:58:00 PM
Isophorone	ND	1.01	µg/L	1	11/30/2011 4:58:00 PM
Naphthalene	ND	1.01	µg/L	1	11/30/2011 4:58:00 PM
Nitrobenzene	ND	1.01	µg/L	1	11/30/2011 4:58:00 PM
N-Nitrosodimethylamine	ND	5.05	µg/L	1	11/30/2011 4:58:00 PM
N-Nitrosodi-n-Propylamine	ND	1.01	µg/L	1	11/30/2011 4:58:00 PM
N-Nitrosodiphenylamine	ND	5.05	µg/L	1	11/30/2011 4:58:00 PM
Pentachlorophenol	ND	2.53	µg/L	1	11/30/2011 4:58:00 PM
Phenanthrene	ND	1.01	µg/L	1	11/30/2011 4:58:00 PM
Phenol	ND	1.01	µg/L	1	11/30/2011 4:58:00 PM
Pyrene	ND	1.01	µg/L	1	11/30/2011 4:58:00 PM
Pyridine	ND	5.05	µg/L	1	11/30/2011 4:58:00 PM
Surr: 2,4,6-Tribromophenol	80.8	15-110	%REC	1	11/30/2011 4:58:00 PM
Surr: 2-Fluorobiphenyl	59.9	30-130	%REC	1	11/30/2011 4:58:00 PM
Surr: 2-Fluorophenol	44.5	15-110	%REC	1	11/30/2011 4:58:00 PM
Surr: Nitrobenzene-d5	58.0	30-130	%REC	1	11/30/2011 4:58:00 PM
Surr: Phenol-d6	38.7	15-110	%REC	1	11/30/2011 4:58:00 PM
Surr: Terphenyl-d14	72.5	30-130	%REC	1	11/30/2011 4:58:00 PM

VOLATILE ORGANIC COMPOUNDS - SW8260B

Analyst: **ZC**

Prep Method: **Prep Date:**

Qualifiers:

B	Analyte detected in the associated Method Blank	BRL	Below Reporting Limit
E	Value above quantitation range	H	Holding times for preparation or analysis exceeded
J	Analyte detected below quantitation limits	ND	Not Detected at the Reporting Limit
S	Spike Recovery outside recovery limits		

ANALYTICAL REPORT

Reissue Date: *17-Jan-12*
Original Reported Date: 09-Dec-11

CLIENT: LRT, LLC
Project: 2-1025

Lab Order: 1111292

VOLATILE ORGANIC COMPOUNDS - SW8260B

Analyst: **ZC**

Prep Method: **Prep Date:**

1,1,1,2-Tetrachloroethane	ND	2.00	µg/L	1	11/29/2011 8:51:00 PM
1,1,1-Trichloroethane	ND	2.00	µg/L	1	11/29/2011 8:51:00 PM
1,1,2,2-Tetrachloroethane	ND	2.00	µg/L	1	11/29/2011 8:51:00 PM
1,1,2-Trichloroethane	ND	2.00	µg/L	1	11/29/2011 8:51:00 PM
1,1-Dichloroethane	ND	2.00	µg/L	1	11/29/2011 8:51:00 PM
1,1-Dichloroethene	ND	2.00	µg/L	1	11/29/2011 8:51:00 PM
1,1-Dichloropropene	ND	2.00	µg/L	1	11/29/2011 8:51:00 PM
1,2,3-Trichlorobenzene	ND	2.00	µg/L	1	11/29/2011 8:51:00 PM
1,2,3-Trichloropropane	ND	5.00	µg/L	1	11/29/2011 8:51:00 PM
1,2,4-Trichlorobenzene	ND	2.00	µg/L	1	11/29/2011 8:51:00 PM
1,2,4-Trimethylbenzene	ND	2.00	µg/L	1	11/29/2011 8:51:00 PM
1,2-Dibromo-3-Chloropropane	ND	2.00	µg/L	1	11/29/2011 8:51:00 PM
1,2-Dibromoethane	ND	2.00	µg/L	1	11/29/2011 8:51:00 PM
1,2-Dichlorobenzene	ND	2.00	µg/L	1	11/29/2011 8:51:00 PM
1,2-Dichloroethane	ND	2.00	µg/L	1	11/29/2011 8:51:00 PM
1,2-Dichloropropane	ND	2.00	µg/L	1	11/29/2011 8:51:00 PM
1,3,5-Trimethylbenzene	ND	2.00	µg/L	1	11/29/2011 8:51:00 PM
1,3-Dichlorobenzene	ND	2.00	µg/L	1	11/29/2011 8:51:00 PM
1,3-Dichloropropane	ND	2.00	µg/L	1	11/29/2011 8:51:00 PM
1,4-Dichlorobenzene	ND	2.00	µg/L	1	11/29/2011 8:51:00 PM
2,2-Dichloropropane	ND	2.00	µg/L	1	11/29/2011 8:51:00 PM
2-Butanone	ND	10.0	µg/L	1	11/29/2011 8:51:00 PM
2-Chloroethyl Vinyl Ether	ND	5.00	µg/L	1	11/29/2011 8:51:00 PM
2-Chlorotoluene	ND	2.00	µg/L	1	11/29/2011 8:51:00 PM
2-Hexanone	ND	10.0	µg/L	1	11/29/2011 8:51:00 PM
4-Chlorotoluene	ND	2.00	µg/L	1	11/29/2011 8:51:00 PM
4-Isopropyltoluene	ND	2.00	µg/L	1	11/29/2011 8:51:00 PM
4-Methyl-2-Pentanone	ND	5.00	µg/L	1	11/29/2011 8:51:00 PM
Acetone	ND	50.0	µg/L	1	11/29/2011 8:51:00 PM
Acrolein	ND	50.0	µg/L	1	11/29/2011 8:51:00 PM
Acrylonitrile	ND	50.0	µg/L	1	11/29/2011 8:51:00 PM
Benzene	ND	2.00	µg/L	1	11/29/2011 8:51:00 PM
Bromobenzene	ND	2.00	µg/L	1	11/29/2011 8:51:00 PM
Bromochloromethane	ND	2.00	µg/L	1	11/29/2011 8:51:00 PM
Bromodichloromethane	ND	2.00	µg/L	1	11/29/2011 8:51:00 PM
Bromoform	ND	2.00	µg/L	1	11/29/2011 8:51:00 PM
Bromomethane	ND	2.00	µg/L	1	11/29/2011 8:51:00 PM
Carbon Disulfide	ND	2.00	µg/L	1	11/29/2011 8:51:00 PM
Carbon Tetrachloride	ND	2.00	µg/L	1	11/29/2011 8:51:00 PM

Qualifiers:

- B Analyte detected in the associated Method Blank
- E Value above quantitation range
- J Analyte detected below quantitation limits
- S Spike Recovery outside recovery limits
- BRL Below Reporting Limit
- H Holding times for preparation or analysis exceeded
- ND Not Detected at the Reporting Limit

ANALYTICAL REPORT

Reissue Date: *17-Jan-12*
Original Reported Date: 09-Dec-11

CLIENT: LRT, LLC
Project: 2-1025

Lab Order: 1111292

VOLATILE ORGANIC COMPOUNDS - SW8260B

Analyst: **ZC**

Prep Method: **Prep Date:**

Chlorobenzene	ND	2.00	µg/L	1	11/29/2011 8:51:00 PM
Chloroethane	ND	2.00	µg/L	1	11/29/2011 8:51:00 PM
Chloroform	ND	2.00	µg/L	1	11/29/2011 8:51:00 PM
Chloromethane	ND	2.00	µg/L	1	11/29/2011 8:51:00 PM
cis-1,2-Dichloroethene	ND	2.00	µg/L	1	11/29/2011 8:51:00 PM
cis-1,3-Dichloropropene	ND	2.00	µg/L	1	11/29/2011 8:51:00 PM
Dibromochloromethane	ND	2.00	µg/L	1	11/29/2011 8:51:00 PM
Dibromomethane	ND	2.00	µg/L	1	11/29/2011 8:51:00 PM
Dichlorodifluoromethane	ND	2.00	µg/L	1	11/29/2011 8:51:00 PM
Ethylbenzene	ND	2.00	µg/L	1	11/29/2011 8:51:00 PM
Hexachlorobutadiene	ND	2.00	µg/L	1	11/29/2011 8:51:00 PM
Isopropylbenzene	ND	2.00	µg/L	1	11/29/2011 8:51:00 PM
Methyl Tert-Butyl Ether	ND	2.00	µg/L	1	11/29/2011 8:51:00 PM
Methylene Chloride	ND	5.00	µg/L	1	11/29/2011 8:51:00 PM
Naphthalene	ND	10.0	µg/L	1	11/29/2011 8:51:00 PM
n-Butylbenzene	ND	2.00	µg/L	1	11/29/2011 8:51:00 PM
n-Propylbenzene	ND	2.00	µg/L	1	11/29/2011 8:51:00 PM
sec-Butylbenzene	ND	2.00	µg/L	1	11/29/2011 8:51:00 PM
Styrene	ND	2.00	µg/L	1	11/29/2011 8:51:00 PM
tert-Butylbenzene	ND	2.00	µg/L	1	11/29/2011 8:51:00 PM
Tetrachloroethene	ND	2.00	µg/L	1	11/29/2011 8:51:00 PM
Toluene	ND	2.00	µg/L	1	11/29/2011 8:51:00 PM
trans-1,2-Dichloroethene	ND	2.00	µg/L	1	11/29/2011 8:51:00 PM
trans-1,3-Dichloropropene	ND	2.00	µg/L	1	11/29/2011 8:51:00 PM
Trichloroethene	ND	2.00	µg/L	1	11/29/2011 8:51:00 PM
Trichlorofluoromethane	ND	2.00	µg/L	1	11/29/2011 8:51:00 PM
Vinyl Chloride	ND	2.00	µg/L	1	11/29/2011 8:51:00 PM
Xylenes, Total	ND	2.00	µg/L	1	11/29/2011 8:51:00 PM
Surr: 1,2-Dichloroethane-d4	121	70-130	%REC	1	11/29/2011 8:51:00 PM
Surr: 4-Bromofluorobenzene	87.8	70-130	%REC	1	11/29/2011 8:51:00 PM
Surr: Dibromofluoromethane	100	70-130	%REC	1	11/29/2011 8:51:00 PM
Surr: Toluene-d8	114	70-130	%REC	1	11/29/2011 8:51:00 PM

CHLORIDE - E300.0

Analyst: **SUB**

Prep Method: **Prep Date:**

Chloride	*33.0*	3.00	mg/L	1	11/29/2011

NOTES:
Sample was analyzed by Phoenix Environmental Laboratories, M-CT007.

Qualifiers:

B	Analyte detected in the associated Method Blank	BRL	Below Reporting Limit
E	Value above quantitation range	H	Holding times for preparation or analysis exceeded
J	Analyte detected below quantitation limits	ND	Not Detected at the Reporting Limit
S	Spike Recovery outside recovery limits		

ANALYTICAL REPORT

Reissue Date: *17-Jan-12*
Original Reported Date: 09-Dec-11

CLIENT: LRT, LLC
Project: 2-1025

Lab Order: 1111292

CYANIDE, TOTAL - E335.4/9010

Analyst: **SUB**

Prep Method: **Prep Date:**

Cyanide	ND	0.00500	mg/L	1	11/29/2011

NOTES:
Sample was analyzed by Phoenix Environmental Laboratories, M-CT007.

TOTAL RESIDUAL CHLORINE- SM 4500 CL-G

Analyst: **SUB**

Prep Method: **Prep Date:**

Total Residual Chlorine	ND	0.0200	mg/L	1	11/29/2011 12:50:00 PM

NOTES:
Sample was analyzed by Phoenix Environmental Laboratories, M-CT007.

TRIVALENT CHROMIUM IN WATER - 6010B&3500

Analyst: **Admir**

Prep Method: **Prep Date:**

Trivalent Chromium, Cr3+	ND	0.070	mg/L	1	12/8/2011

HEXAVALENT CHROMIUM - SM3500-CR-D

Analyst: **JC**

Prep Method: **Prep Date:**

Chromium, Hexavalent	ND	0.0500	mg/L	1	11/29/2011 11:00:00 AM

Qualifiers:

B	Analyte detected in the associated Method Blank	BRL	Below Reporting Limit
E	Value above quantitation range	H	Holding times for preparation or analysis exceeded
J	Analyte detected below quantitation limits	ND	Not Detected at the Reporting Limit
S	Spike Recovery outside recovery limits		

GeoLabs, Inc.
45 Johnson Lane ~ Braintree MA 02184 ~ 781 848 7844 ~ 781 848 7811

1111292 PAGE OF

CHAIN OF CUSTODY RECORD

GeoLabs, Inc. *Environmental Laboratories*
45 Johnson Lane, Braintree, MA 02184
p 781.848.7844 • f 781.848.7811
www.geolabs.com

Sample Handling: circle choice
Filtration: Done / Not Needed / Lab to do
Preservation: Lab to do Y / N

Special Instructions

Turnaround: circle one
1-day 3-day
2-day 5 / 7-days

Data Delivery: circle choice (s)
Fax email
Format:
Excel PDF

Requirements: circle choice (s)
GW-1 MCP Methods CT RCP (Reasonable Confidence Protocols)
S-1 DEP State / Fed Program - Criteria _____
QC Other _____

Client: LRT
Address: 127 Hartwell Ave
West Bridgeton 01583
Contact: p lockwood

Phone: 774-450-7177
Fax:
email: p lockwood@lrt-llc.net

Project: OWS
Project PO: 2-1025
Invoice to *: LRT

Preservative:

COLLECTION DATE	TIME	SAMPLED BY	SAMPLE LOCATION / ID	CONTAINER TYPE	QUANITY	MATRIX	COMP	GRAB	GeoLabs SAMPLE NUMBER	TSS	TRC	TPH	CN	8260/TCL CLS 2 DCE	AS CR+3 CdNi ZN PB	8270	Cr+6 HEXT	CL	TEMPERATURE	LAB pH
										7	7		7					7		
													7							
11/28/11	1:00	T2	OWS 112811			DW		DW	11292-001	1P	1P	1A	1P	2V	1P	1A	1P	1P	7/5	

Analysis Requested

Matrix Codes:
GW = Ground Water DW = Drinking Water S = Soil A = Air
WW = Waste Water SL = Sludge O = Oil OT = Other

Received on Ice ✓

Preservatives
1 = Hcl 3 = H2S04 5 = NaCH 7 = Other
2 = HN03 4 = Na2S2O3 6 = MEOH

Containers:
A = Amber B = Bag O = Other
G = Glass P = Plastic
S = Summa V = Voa

Relinquished by:	Date / Time		Received by:	Date / Time	
Jerry A Zemy	11-28-11	145	[signature]	11/28/11	1:45
[signature]	11-28-11	3:50	Danielle Nye	11/28/11	3:50

2010730.J&P.C of CR.09/22/10 * Terms: Payment due within 30 days unless other arrangements are made. Past due balances subject to interest and collection cost.
Note: Homeowners and Law Firms must pay when dropping off samples. We accept cash, check and credit cards.

CT (PH-0148) MA (MA - 015) NH (2508) NJ (MA-009)
PA (68-03417) RI (LA000252) ME (MA - 0015)

Appendix D
MSDS Sheets

MSDS Document

Product Caltran 60-08

1. Chemical Product and Company Identification

Trade Name of this Product Caltran 60-08
Synonyms: 3005-00

MSDS ID 3005-00
Manufacturer
Calumet Lubricants Company
2780 Waterfront Pkwy E. Suite 200
Indianapolis, IN 46214

Contact Name
Anne Goldsmith
Phone Number
(317) 328-5660
Emergency Phone
CHEMTREC (800) 424-9300
unused 04/12/01

Health:	1
Fire:	1
Reactivity:	0
Specific	

2. Composition and Information on Ingredients

Ingredient	CAS Number	Weight %	ACGIH TLV	PEL	STEL
Light Naphthenic Hydrotreated Distillates (petroleum)	64742-53-6	>99.0 %	5 mg/m3	5 mg/m3	
BHT Blend Package	Trade Additive	<1.0 %			

3. Hazard Identification

Hazards
This product is a clear, pale-straw to water-white, viscous liquid. It has a light petroleum odor.

This product is slightly combustible (Flammability Class IIIB) but will burn. The flash point is >201°F and autoignition temperature is 650°F. Heated product will produce colorless vapors. Heated vapors in the presence of an ignition source can be explosive if confined.

When burned, the product will produce carbon monoxide and other asphyxiants during combustion.

Prolong unprotected exposure to this product will cause skin irritation. Material splashed in eyes will irritate tissues. Gently flush material from eyes with clean water. Remove product soaked clothing and wash with mild soap.

As with any petroleum product, avoid mixing this product with strong oxidizers.

Carcinogen listed by: National Toxicology Program (NO)
I. A. R. C. (NO)
OSHA (NO)
ACGIH (NO)
This product does not require a cancer hazard warning in accordance with the OSHA Hazard Communication Standard.

MEDICAL CONDITIONS AGGRAVATED BY EXPOSURE
Personnel with pre-existing skin disorders should avoid contact with this product.

Health studies have shown that many petroleum hydrocarbons and synthetic lubricants pose potential human health risks which may vary from person to person. As a precaution, exposure to liquids, vapors, mists or fumes should be minimized.

4. First Aid Information

First Aid Measures
EYES
If splashed into eyes, flush with clear water for 15 minutes or until irritation subsides. If irritation persists, call a physician.

SKIN
In case of skin contact, remove any contaminated clothing and wash skin with soap and water. Launder or dry-clean clothing before reuse. If product is injected into or under the skin, or into any part of the body, regardless of the appearance of the wound or its size, the individual should be evaluated immediately by a physician as a surgical emergency. Even though initial symptoms from high pressure injection may be minimal or absent, early surgical treatment within the first few hours may significantly reduce the ultimate extent of injury. Prolonged or repeated skin contact may cause skin irritation.

INGESTION
Product is practically non-toxic. Do not induce vomiting. Obtain emergency medical attention.

INHALATION
Vapor pressure is very low. Vapor inhalation under ambient conditions is normally not a problem. If overcome by vapor from hot product, immediately remove from exposure and call a physician. If breathing is irregular or has stopped, start resuscitation; administer oxygen, if available. If overexposed to oil mist, remove from exposure until excessive oil mist condition subsides.

5. Fire Fighting Measures

Flash Point 293

FP Method ASTM D92

Fire Fighting
FIRE AND EXPLOSION HAZARDS
Slightly combustible. OSHA/NFPA Class IIIB Combustible Liquid. If heated above its flash point will release flammable vapors which can burn in the open or be explosive in confined spaces if exposed to ignition source. Mists or sprays may be flammable below oils normal flash point. Keep away from extreme heat or open flame.

EXTINGUISHING MEDIA
Foam, water spray (fog), dry chemical, carbon dioxide, and vaporizing liquid type extinguishing agents mat all be suitable for extinguishing fires involving this type of product, depending on size or potential size of fire and circumstances related to the situation. Plan fire protection and response strategy through consultation with local fire protection authorities or appropriate specialists.

The following procedures for this type of product are based on the recommendations in the National Fire Protection Association's "Fire Protection Guide on Hazardous Materials", Tenth Edition (1991):

Use water spray, dry chemical, foam or carbon dioxide to extinguish the fire. Use water to keep fire-exposed containers cool. If a leak or spill has not ignited, use water spray to disperse the vapors and to provide protection for persons attempting to stop a leak. Water spray may be used to flush spills away from exposures. Minimize breathing of gases, vapor, fumes or decomposition products. Use supplied-air breathing equipment for enclosed or confined spaces or as otherwise needed.

DECOMPOSITION PRODUCTS UNDER FIRE CONDITIONS
Fumes, smoke, carbon monoxide, aldehydes and other decomposition products, in the case of incomplete combustion.

FLAMMABLE PROPERTIES
FLASH POINT: >293°F >145°C COC ASTM D92
AUTO IGNITION: >650°F >343°C
FLAMMABILITY CLASS: IIIB

6. Accidental Release Measures

Release Measures
Extinguish any open flames and remove heat sources.

This material will float on water and will be transported by stormwater runoff. Spills to the ground should be immobilized and removed immediately. Spills to watercourses such as stormdrains, sewers, ditches, streams, ponds, etc. must be contained with dikes, dams, floating booms, pads, etc. as appropriate. Remove trapped product immediately.

Spills that enter a waterbody must be immediately reported to the USEPA's National Response Center at (800)546-2972.
Check with your local and state regulators regarding their reporting requirements.

Cleanup personnel should wear appropriate personnel protective equipment including impervious clothing, rubber boots, gloves, and splash goggles.

7. Handling and Storage

Handling and Storage

HANDLING AND STORAGE PRECAUTIONS
Keep away from flames, sparks or hot surfaces. Never use a torch to cut or weld on or near container. Empty oil containers can contain explosive vapors. NFPA Class IIIB storage. Wash thoroughly after handling.

WORK/HYGIENIC PRACTICES
Wash hands with soap and water before eating, drinking, smoking or use of toilet facilities. Do not use gasoline, solvents, kerosene, or harsh abrasive skin cleaners for washing exposed skin areas. Take a shower after work if general contact occurs. Remove oil-soaked clothing and launder before reuse. Launder or discard contaminated shoes and leather gloves.

"EMPTY" CONTAINER WARNING
"Empty" containers retain residue (liquid and/or vapor) and can be dangerous. DO NOT PRESSURIZE, CUT, WELD, BRAZE, SOLDER, DRILL, GRIND OR EXPOSE SUCH CONTAINERS TO HEAT, FLAME, SPARKS, STATIC ELECTRICITY, OR OTHER SOURCES OF IGNITION; THEY MAY EXPLODE AND CAUSE INJURY OR DEATH.

Do not attempt to refill or clean containers since residue is difficult to remove. "Empty" drums should be completely drained, properly bunged and promptly returned to a drum reconditioner. All other containers should be disposed of in an environmentally safe manner and in accordance with governmental regulations.

For work on tanks refer to Occupational Safety and Health Administration regulations, ANSI Z49.1, and other governmental and industrial references pertaining to cleaning, repairing, welding, or other contemplated operations.

8. Exposure Controls and Personal Protection

Exposure

VENTILATION
Use local exhaust to capture vapor, mists or fumes, if necessary. Provide ventilation sufficient to prevent exceeding recommended exposure limit or buildup of explosive vapors in air. No smoking, use of flame, or other ignition sources.

EYE/FACE PROTECTION
Use safety glasses or splash goggles when eye contact may occur. Have suitable eyewash water available.

SKIN PROTECTION
Avoid prolonged and/or repeated skin contact. If prolonged contact cannot be avoided, wear protective impervious clothing. Acceptable materials for gloves are polyvinyl chloride, neoprene, nitrile, polyvinyl alcohol, and viton.

RESPIRATORY PROTECTION
Normally not required if adequate ventilation. If occupational exposure limits are exceeded, wear NIOSH/MSHA approved apparatus.

OTHER/GENERAL PROTECTION
If there is a likelihood of splashing, an oil resistant clothing should be worn. Never wear oil soaked clothing. Launder or dry clean before wearing. Discard oil soaked shoes. Affix warning labels on containers in accordance with 29 CFR 1910.1200 (Hazard Communication Standard).

INGREDIENT NAME	EXPOSURE LIMITS	CONCENTRATION PERCENT BY VOLUME
Light Hydrotreated Naphthenic Distillate (petroleum)		>99.0
CAS NUMBER: 64742-53-6	Exposure Limits: OIL MIST OSHA PEL MIST 5 MG/M3 8 HRS ACGIH TLV MIST 5 MG/M3 8 HRS	
BHT Blend Package		<1.0
CAS NUMBER: Mixture	Exposure Limits: N/A	

9. Physical and Chemical Properties

Specific Gravity	0.8961
Density lbs/Gal.	7.476

APPEARANCE: Clear, pale straw to water white, viscous liquid
ODOR: Light bland petroleum
PHYSICAL STATE: Liquid
BOILING POINT: IBP >520 (D86)°F IBP >271 (D86)°C
MELTING POINT: -80°F (D97) -62°C (D97)
VAPOR PRESSURE: N/A
VAPOR DENSITY (AIR=1): Greater than air
SPECIFIC GRAVITY: 0.8961
MOLECULAR WEIGHT: N/A
SOLUBILITY (H2O): negligible
PERCENT VOLATILES: nil
VOLATILE ORGANIC COMPOUNDS (VOC) CONTENT: N/A
EVAPORATION RATE: 1000X slower than ethyl ether
pH: essentially neutral
VISCOSITY: 10.9 CST at 40°C

Physical data may vary slightly to meet specifications.

10. Stability and Reactivity

Stability/Reactivity
STABILITY: Stable. Will not react violently with water.

CONDITIONS TO AVOID
Sources of ignition.

INCOMPATIBLE MATERIALS

Strong oxidizers such as liquid chlorine, concentrated oxygen, sodium hypochlorite, calcium hypochlorite, etc., as this presents a serious explosion hazard.

HAZARDOUS DECOMPOSITION PRODUCTS
Combustion may produce carbon monoxide and other asphyxiants.

HAZARDOUS POLYMERIZATION: will not occur

11. Toxicological Information

Toxicological
ACUTE STUDIES
Product has a low order of acute and dermal toxicity, but minute amounts aspirated into the lungs during ingestion or vomiting may cause mild to severe pulmonary injury and possibly death.

EYE EFFECTS
Product contacting the eyes may cause eye irritation.

SKIN EFFECTS
Prolonged or repeated skin contact with this product tends to remove skin oils, possibly leading to irritation and dermatitis; however, based on human experience and available toxicological data, this product is judged to be neither a "corrosive" nor an "irritant" by OSHA criteria.

ACUTE ORAL EFFECTS
Product has a low order of acute and dermal toxicity, but minute amounts aspirated into the lungs during ingestion or vomiting may cause mild to severe pulmonary injury and possibly death.

ACUTE INHALATION EFFECTS
Product has a low order of acute and dermal toxicity, but minute amounts aspirated into the lungs during ingestion or vomiting may cause mild to severe pulmonary injury and possibly death.

In accordance with the current OSHA Hazard Communication Standard criteria, this product does not require a cancer hazard warning. This is because the product is formulated from base stocks which are severely hydrotreated, severely solvent extracted, and/or processed by mild hydrotreatment and extraction. Alternatively, it may consist of components not otherwise affected by IARC criteria, such as atmospheric distillates or synthetically derived materials, and as such is not characterized by current IARC classification criteria.

12. Ecological Information

Ecological Info
If applied to leaves, this product may kill grasses and small plants by interfering with transpiration and respiration. This product is not toxic to fish but may coat gill structures resulting in suffocation if spilled in shallow, running water. Product may be moderately toxic to amphibians by preventing dermal respiration. This product may cause gastrointestinal distress to birds and mammals through ingestion during pelage grooming.

This product is rapidly biodegradable. Biodegradation is possible within 90 to 120 days in aerobic environments at temperatures above 70°F (21°C).

13. Disposal Considerations

Disposal
Product, as supplied, does not meet the characteristics of a hazardous waste as defined in 40 CFR 261.21-24. If mixed with other products, waste mixture must be characterized. DO NOT dispose of this product in drains or storm sewers. DO NOT dispose of this product in a landfill without prior solidification. Waste product should be recycled. Consider waste brokering.

14. Transportation Information

Transport Info
PROPER SHIPPING NAME: Not regulated by DOT
HAZARD CLASS: Not applicable
DOT IDENTIFICATION NUMBER: N/A
DOT SHIPPING LABEL: Not regulated by DOT

15. Regulatory Information

U.S. FEDERAL REGULATORY INFORMATION
SARA 302 Threshold Planning Quantity: NOT APPLICABLE
SARA 304 Reportable Quantity : NOT APPLICABLE
SARA 311 Categories: Immediate (Acute) Health Effects --N
Delayed (Chronic) Health Effects --Y
Fire Hazard --N
Sudden Release of Pressure Hazard--N
Reactivity Hazard --N

EPA/TSCA Inventory: The components of this product are listed on the EPA/TSCA inventory of chemicals.
EPA Hazard Classification Code: NOT APPLICABLE
Comprehensive Environmental Response, Compensation and Liability Act (CERCLA):

Phenol - CAS No. 108-95-2 CERCLA RQ = 1000 lbs.

SARA TITLE III - SECTION 313 SUPPLIER NOTIFICATION
No chemicals in this product exceed the De Minimus reporting level established by SARA Title III, Section 313 and 40 CFR 372.

CANADIAN REGULATORY INFORMATION
This product is listed on the Canadian (DSL) Domestic Substances List.
WHMIS Classification: NOT CONTROLLED

16. Other Information

Disclaimer
DISCLAIMER OF EXPRESSED AND IMPLIED WARRANTIES

The information contained herein is based upon data believed to be reliable and reflects our best professional judgment. Although reasonable care has been taken in the preparation of this document, we extend no warranties and make no representations as to the accuracy or completeness of the information contained therein and assume no responsibility regarding the suitability of this information for the user's intended purpose or for the consequence of its use. Each individual should make a determination as to the suitability of the information for his/her particular purpose(s).

Supercedes MSDS dated: 04/04/2001

Revisions: 05/04/2004 - revised formula, total revision to reflect new format

HOLLISTON SAND COMPANY, INC.

MSDS – MANUFACTURERS SAFETY DATA SHEET

MANUFACTURER IDENTIFICATION

Holliston Sand Company, Inc. PO Box 1168, 77 Tifft Road, Slatersville, RI 02876
Main Office: 401.766.5010 Main Fax: Fax: 401.762.4976 Revised 6/26/2006

HAZARD IDENTIFICATION

- Common Identity: Silica Sand
- Crystalline silica: CAS # 14808-60-7
- Chemical Components: Silica, crystalline quartz
- Considered hazardous under the OSHA Hazard Communications Standard (29 CFR 1910.1200).
- Potential health risks / chronic effects include silicosis, lung cancer, tuberculosis, autoimmune and chronic kidney diseases, non-malignant respiratory diseases and abrasion of the cornea.
- Available references as related to exposure limits:
    - Code of Federal Regulations 29CFR1910.1000: "Air Contaminants," Occupational Safety and Health Administration (OSHA), Washington, DC, http://www.osha.gov.
    - Threshold Limit Values and Exposure Indices for Chemical Substances in Workroom Air," American Conference of Governmental Industrial Hygienists (ACGIH), Cincinnati, OH 1988, http://www.acgih.org.
    - National Technical Information Service, Springfield, VA: Criteria for Recommended Standard Occupational Exposure to Crystalline Silica, HEW Publication No. (NIOSH) 75-120, NTIS Acquisition No. PB 246-697, http://www.ntis.gov.

COMPOSITION / PHYSICAL DATA

- Specific Chemical Identity: Silicon Dioxide SiO_2
- Composition: SiO2, Al2O3, CaO, FeO, MgO, TiO2 and other trace elements
- Specific Gravity: 2.60
- Vapor Pressure (mm Hg.): none
- Solubility in Water: Insoluble
- Tan / Gray in appearance
- Vapor Pressure: none
- Odor: none
- Evaporation Rate (Butyl Acetate = 1): none
- Sub-rounded / Sub-angular shapes

STABILITY AND REACTIVITY

- Contact with powerful oxidizing agents such as fluorine, boron trifluoride, chlorine trifluoride, manganese trifluoride, and oxygen difluoride may cause fire and/or explosion.
- Silica dissolves readily in hydrofluoric acid producing a corrosive gas – silicon tetrafluoride.
- Handling may generate silica-containing respirable dust particles.
- Hazardous Polymerization: Not known to polymerize
- Flashpoint: Not flammable
- Flammable Limits in Air: Not Flammable
- Extinguishing Agents: None required

FIRST AID MEASURES

- **INHALATION:** Routes of entry are typically by inhalation not by ingestion or through the skin. No specific first-aid is necessary since the adverse health effects associated with exposure to crystalline silica result from chronic exposures. If there is a gross inhalation of crystalline silica, remove the person immediately to fresh air, give artificial respiration as needed, and seek medical attention as needed.
- **EYE CONTACT:** Wash immediately with water. If irritation persists, seek medical attention.
- **SKIN CONTACT:** Not applicable
- **INGESTION:** Not applicable

HEALTH HAZARD INFORMATION - SILICOSIS

The major concern is silicosis. Silicosis is caused by the inhalation and retention of respirable crystalline silica dust and can exist in several forms, chronic, accelerated, or acute.

- **Chronic Silicosis:** is the most common form of silicosis and can occur after many years of exposure to relatively low levels of airborne respirable silica dust. It is further defined as simple or complicated silicosis.
- **Accelerated Silicosis** can occur with a exposure to high concentrations of respirable crystalline silica over a relatively short period; the lung lesions can appear within five years of exposure. Progression can be rapid. Accelerated silicosis is similar to chronic or ordinary silicosis, except the lung lesions appear earlier and progression is more rapid.
- **Acute Silicosis** can occur with exposures to very high concentrations of respirable crystalline silica over a very short time period, sometimes as short as a few months. The symptoms of acute silicosis include progressive shortness of breath, fever, cough and weight loss. Acute silicosis is fatal.
- **Carcinogenicity:** Crystalline silica inhaled from occupational sources is classified as carcinogenic to humans.
- **Signs and Symptoms:** Shortness of breath, reduced pulmonary function, coughing, wheezing and possible chest illness.
- **References:**
    - IARC Monographs on the Evaluation of the Carcinogenic Risk of Chemicals to Human-Silica and Some Silicates, Coal, Dust and Para-Aramid Fibrils, Vol. 68, 1997. World Health Organization, International Agency for Research on Cancer (IARC), Lyon, France, 1997, http://www.iarc.fr
    - NIOSH Hazard Review – Occupational Effects of Occupational Exposure to Respirable Crystalline Silica published in April 2002. NIOSH-Publications Dissemination, 800.356.4676, www.cdc.gov/niosh/topics/silica.
    - Sand or gravel is not listed as a carcinogen by the International Agency for Research on Cancer PAC), the National Toxicology Program (NTP), or the Occupational Safety and Health Administration (OSHA).
    - In October 1996, an IARC Working Group re-assessing crystalline silica, a component of this product, designated respirable crystalline silica as carcinogenic (Group 1). The NTP'S Report on Carcinogens, 9th edition, lists respirable crystalline silica as a "known human carcinogen."
    - In year 2000, the American Conference of Governmental Industrial Hygienists (ACGIH) listed respirable crystalline silica (quartz) as a suspected human carcinogen (A-2). These classifications are based on sufficient evidence of carcinogenicity in certain experimental animals and on selected epidemiological studies of workers exposed to crystalline silica.

PERSONAL PROTECTION AND EXPOSURE CONTROLS

Local Exhaust Ventilation: Use sufficient local exhaust ventilation to reduce the level of respirable crystalline silica to below OSHA PEL. See ACGIH "Industrial Ventilation, A Manual of Recommended Practice".

Respiratory Protection: If it is not possible to reduce the airborne exposure levels to below the OSHA PEL with ventilation, use the guidelines found in the NIOSH Respirator Selection Logic, 2004 Chapter III, Table 1, "Particulate Respirators". The full document can be found at www.cdc.gov/niosh/npptl/topics/respirators; the user of this MSDS is directed to that site for information concerning respirator selection and use.

Table 1. Particulate Respirators

Assigned protection[1] factor	Type of Respirator
10	Any air-purifying elastomeric half-mask respirator equipped with appropriate type of particulate filter.2 Appropriate filtering facepiece respirator.2,3 Any air-purifying full facepiece respirator equipped with appropriate type of particulate filter.2 Any negative pressure (demand) supplied-air respirator equipped with a half-mask.
25	Any powered air-purifying respirator equipped with a hood or helmet and a high efficiency (HEPA) filter. Any continuous flow supplied-air respirator equipped with a hood or helmet.
50	Any air-purifying full facepiece respirator equipped with N-100, R-100, or P-100 filter(s).

	Any powered air-purifying respirator equipped with a tight-fitting facepiece (half or full facepiece) and a high-efficiency filter. Any negative pressure (demand) supplied-air respirator equipped with a full facepiece. Any continuous flow supplied-air respirator equipped with a tight-fitting facepiece (half or full facepiece). Any negative pressure (demand) self-contained respirator equipped with a full facepiece.
1,000	Any pressure-demand supplied-air respirator equipped with a half-mask.
2,000	Any pressure-demand supplied-air respirator equipped with a full facepiece.
10,000	Any pressure-demand self-contained respirator equipped with a full facepiece. Any pressure-demand supplied-air respirator equipped with a full facepiece in combination with an auxiliary pressure-demand self-contained breathing apparatus.

1 The protection offered by a given respirator is contingent upon (1) the respirator user adhering to complete program requirements (such as the ones required by OSHA in 29CFR1910.134), (2) the use of NIOSH-certified respirators in their approved configuration, and (3) individual fit testing to rule out those respirators that cannot achieve a good fit on individual workers.
2 Appropriate means that the filter medium will provide protection against the particulate in question. See step 9.2 for information on the presence or absence of oil particulates.
3 An APF of 10 can only be achieved if the respirator is qualitatively or quantitatively fit tested on individual workers.

Exposure Guidelines:

Component	CAS No.	Percentage (by wt.)	OSHA PEL		ACGIH TLV		NIOSH REL		
			TWA	STEL	TWA		STEL	TWA	UNIT
Crystalline Silica	14808-60-7	Approx: 85.0	10/(%SiO_2+2)	None	.05	None	.05	None	Mg/m^3

If crystalline silica is heated to more than 870°C, it can change to a form of crystalline silica known as trydimate; if crystalline silica is heated to more than 1470°C, it can change to a form of crystalline silica known as cristobalite. The OSHA PEL for crystalline silica as trydimite or cristobalite is one-half of the OSHA PEL for crystalline silica.

Engineering and administrative controls use designed ventilation systems as the primary method to remove crystalline silica from the workplace environment. Use administrative controls such as job rotation and water spray to supplement engineering controls and respiratory protection. If sandblasting use a respirator approved by NIOSH for abrasive blasting operations. Enclose the operation in a properly designed and maintained blasting enclosure as indicated in "Air Quality: Health for Abrasive Blasting. Final Rule, " Federal Register 59.34, 2/18/94.

STORAGE AND HANDLING PRECAUTIONS

Precautions during handling, storage and use: Do not breathe dust. Use adequate ventilation and dust collection. Keep airborne dust concentrations below permissible exposure limit ("PEL"). Do not rely on your sight to determine if dust is in the air. Respirable crystalline silica dust may be in the air without a visible cloud dust.

If crystalline silica dust cannot be kept below permissible limits, wear a respirator approved for silica dust when using, handling, storing and disposing of this product or bag. Do not permit dust to collect on walls, floors, sills, ledges, machinery, or equipment. Maintain, clean, and fit test respirators in accordance with OSHA regulations. Maintain and test ventilation and dust collection equipment. Wash and vacuum clothing that has become dusty.
Avoid breakage of bagged material or spills of bulk material. Use dustless methods (vacuum) and place into closable container for disposal, or flush with water. Do not dry sweep. Use control measures.
The OSHA Hazard Communication Standard 29 CFR Sections 1910.1200, 1915,1200, 1917.28, 1918.90, 1926.59 and 1928.21, and state and local worker "right to know" laws and regulations should be strictly

followed. Additional precautions can be found in the "American Society for Testing and Materials (ASTM) standard practice C 1132-99a, "Standard Practice for Health Requirements Relating to Occupational Exposure to Respirable Crystalline Silica."

DISPOSAL

Crystalline silica is not a hazardous material for purposes of transportation under the U.S. Department of Transportation Table of Hazardous Materials, 49 CFR 172.101.

TRANSPORTATION

Crystalline silica is not a hazardous material for purposes of transportation under the U.S. Department of Transportation Table of Hazardous Materials, 49 CFR 172.101.

OTHER INFORMATION

Category	Hazard Material Information System (HMIS)	National Fire Protection Association (NFPA):
Health	*	0
Flammability	0	0
Reactivity	0	0
Protective Equipment	E	N/A
* For further information on health effects – read this MSDS, review references and frequently visit OSHA and NIOSH web sites for updates.		

Notice: Holliston Sand Company believes the information contained herein is accurate; however, Holliston Sand Company makes no guarantees with respect to such accuracy and assumes no liability in connection with the use of the information contained herein by any party. The provision of the information contained herein is not intended to be and should not be construed as legal advice or as ensuring compliance with any federal, state or local laws and regulations. Holliston Sand Company accepts no responsibility and disclaim all liability for the harmful effects that may be caused by the purchase, resale, use or exposure to our products. Customer-users of our products must comply with all applicable health and safety laws, regulations, and orders, including the OSHA Hazed Communications Standard.