UNITED STATES ENVIRONMENTAL PROTECTION AGENCY
Region 1
5 Post Office Square, Suite 100
BOSTON, MA 02109-3912

CERTIFIED MAIL RETURN RECEIPT REQUESTED

JUN 16 2011

John Bauld, Vice President
D'Allessandro Corporation
41 Ledin Drive
Avon, MA 02322

Re: Authorization to discharge under the Remediation General Permit (RGP) – MAG910000. Central Siphon Project site located at 745 Worcester Road, Framingham MA, Middlesex County; Authorization # MAG910489

Dear Mr. Bauld:

Based on the review of a Notice of Intent (NOI) submitted on behalf of Town of Framingham Department of Public Works by the firm GZA GeoEnvironmental, Inc., for the site referenced above, the U.S. Environmental Protection Agency (EPA) hereby authorizes you, as the named Operator, to discharge in accordance with the provisions of the RGP at that site. Your authorization number is listed above.

The checklist enclosed with this RGP authorization indicates the pollutants which you are required to monitor. Also indicated on the checklist are the effluent limits, test methods and minimum levels (MLs) for each pollutant. Please note that the checklist does not represent the complete requirements of the RGP. Operators must comply with all of the applicable requirements of this permit, including influent and effluent monitoring, narrative water quality standards, record keeping, and reporting requirements, found in Parts I and II, and Appendices I – VIII of the RGP. See EPA's website for the complete RGP and other information at: http://www.epa.gov/region1/npdes/mass.html#dgp.

Please note the enclosed checklist includes parameters that exceeded Appendix III limits. The checklist also includes other parameters for which your laboratory reports indicated there was insufficient sensitivity to detect these parameters at the minimum levels established in Appendix VI of the RGP.

Finally, please note the checklist of pollutants attached to this authorization is subject to a recertification if the operations at the site result in a discharge lasting longer than six months. A recertification can be submitted to EPA within six (6) to twelve (12) months of operations in accordance with the 2010 RGP regulations.

This general permit and authorization to discharge will expire on September 9, 2015. You have reported that this project will terminate on 06/01/2012. If for any reason the discharge terminates sooner you are required to submit a Notice of Termination (NOT) to the attention of the contact person indicated below within 30 days of project completion.

Thank you in advance for your cooperation in this matter. Please contact Victor Alvarez at 617-918-1572 or Alvarez.Victor@epa.gov, if you have any questions.

Sincerely,

David M. Webster, Chief
Industrial Permits Branch

Enclosure

cc: Kathleen Keohane, MassDEP
Scott Ollerhead, GZAGeoEnvironmental Inc.

2010 Remediation General Permit
Summary of Monitoring Parameters[1]

NPDES Authorization Number:	**MAG910489**
Authorization Issued:	June, 2011
Facility/Site Name:	Central Siphon Project
Facility/Site Address:	745 Worcester Road, Framingham, MA 01701
	Email address of owner: Not Reported
Legal Name of Operator:	D'Allessandro Corporation
Operator contact name, title, and Address:	John Bauld, Vice President 41 Ledin Drive, Avon, MA 02322
	Email: jbaluld@dallessandro.com
Estimated Date of Completion:	June 1, 2012
Category and Sub-Category:	Contaminated Construction Dewatering. Sub-category A. General Urban Fill Sites
Receiving Water:	Sudbury River

Monitoring & Limits are applicable if checked. All samples are to be collected as grab samples

	Parameter	**Effluent Limit/Method#/ML** (All Effluent Limits are shown as Daily Maximum Limit, unless denoted by a **, in that case it will be a Monthly Average Limit)
√	1. Total Suspended Solids (TSS)	30 milligrams/liter (mg/L) **, 50 mg/L for hydrostatic testing **, Me#60.2/ML5ug/L
	2. Total Residual Chlorine (TRC) [1]	Freshwater = 11 ug/L ** Saltwater = 7.5 ug/L **/ Me#330.5/ML 20ug/L
	3. Total Petroleum Hydrocarbons (TPH)	5.0 mg/L/ Me# 1664A/ML 5.0mg/L
	4. Cyanide (CN) [2, 3]	Freshwater = 5.2 ug/l ** Saltwater = 1.0 ug/L **/ Me#335.4/ML 10ug/L
	5. Benzene (B)	5ug/L /50.0 ug/L for hydrostatic testing only/ Me#8260C/ML 2 ug/L
	6. Toluene (T)	(limited as ug/L total BTEX)/ Me#8260C/ ML 2ug/L
	7. Ethylbenzene (E)	(limited as ug/L total BTEX) Me#8260C/ ML 2ug/L
	8. (m,p,o) Xylenes (X)	(limited as ug/L total BTEX) Me#8260C/ ML 2ug/L
	9. Total Benzene, Toluene, Ethyl Benzene, and Xylenes (BTEX) [4]	100 ug/L/ Me#8260C/ ML 2ug/L
√	10. Ethylene Dibromide (EDB) (1,2- Dibromoethane)	0.05 ug/l/ Me#8260C/ ML 10ug/L

	Parameter	Effluent Limit/Method#/ML (All Effluent Limits are shown as Daily Maximum Limit, unless denoted by a **, in that case it will be a Monthly Average Limit)
	11. Methyl-tert-Butyl Ether (MtBE)	70.0 ug/l/Me#8260C/ML 10ug/L
√	12.tert-Butyl Alcohol (TBA) (TertiaryButanol)	Monitor Only(ug/L)/Me#8260C/ML 10ug/L
	13. tert-Amyl Methyl Ether (TAME)	Monitor Only(ug/L)/Me#8260C/ML 10ug/L
	14. Naphthalene [5]	20 ug/L /Me#8260C/ML 2ug/L
	15. Carbon Tetrachloride	4.4 ug/L /Me#8260C/ ML 5ug/L
	16. 1,2 Dichlorobenzene (o-DCB)	600 ug/L /Me#8260C/ ML 5ug/L
	17. 1,3 Dichlorobenzene (m-DCB)	320 ug/L /Me#8260C/ ML 5ug/L
	18. 1,4 Dichlorobenzene (p-DCB)	5.0 ug/L /Me#8260C/ ML 5ug/L
	18a. Total dichlorobenzene	763 ug/L - NH only /Me#8260C/ ML 5ug/L
	19. 1,1 Dichloroethane (DCA)	70 ug/L /Me#8260C/ ML 5ug/L
	20. 1,2 Dichloroethane (DCA)	5.0 ug/L /Me#8260C/ ML 5ug/L
	21. 1,1 Dichloroethene (DCE)	3.2 ug/L/Me#8260C/ ML 5ug/L
	22. cis-1,2 Dichloroethene (DCE)	70 ug/L/Me#8260C/ ML 5ug/L
	23. Methylene Chloride	4.6 ug/L/Me#8260C/ ML 5ug/L
	24. Tetrachloroethene (PCE)	5.0 ug/L/Me#8260C/ ML 5ug/L
	25. 1,1,1 Trichloro-ethane (TCA)	200 ug/L/Me#8260C/ ML 5ug/L
	26. 1,1,2 Trichloro-ethane (TCA)	5.0 ug/L /Me#8260C/ ML 5ug/L
	27. Trichloroethene (TCE)	5.0 ug/L /Me#8260C/ ML 5ug/L
	28. Vinyl Chloride (Chloroethene)	2.0 ug/L /Me#8260C/ ML 5ug/L
	29. Acetone	Monitor Only(ug/L)/Me#8260C/ML 50ug/L
	30. 1,4 Dioxane	Monitor Only /Me#1624C/ML 50ug/L
	31. Total Phenols	300 ug/L Me#420.1&420.2/ML 2 ug/L/ Me# 420.4 /ML 50ug/L
	32. Pentachlorophenol (PCP)	1.0 ug/L /Me#8270D/ML 5ug/L,Me#604 &625/ML 10ug/L
	33. Total Phthalates (Phthalate esters) [6]	3.0 ug/L ** /Me#8270D/ML 5ug/L, Me#606/ML 10ug/L& Me#625/ML 5ug/L
	34. Bis (2-Ethylhexyl) Phthalate [Di- (ethylhexyl) Phthalate]	6.0 ug/L /Me#8270D/ML 5ug/L,Me#606/ML 10ug/L & Me#625/ML 5ug/L
	35. Total Group I Polycyclic Aromatic Hydrocarbons (PAH)	10.0 ug/L
√	a. Benzo(a) Anthracene [7]	0.0038 ug/L /Me#8270D/ ML 5ug/L, Me#610/ML 5ug/L& Me#625/ML 5ug/L
√	b. Benzo(a) Pyrene [7]	0.0038 ug/L /Me#8270D/ ML 5ug/L, Me#610/ML 5ug/L& Me#625/ML 5ug/L

	Parameter	Effluent Limit/Method#/ML (All Effluent Limits are shown as Daily Maximum Limit, unless denoted by a **, in that case it will be a Monthly Average Limit)
√	c. Benzo(b)Fluoranthene [7]	0.0038 ug/L /Me#8270D/ ML 5ug/L, Me#610/ML 5ug/L& Me#625/ML 5ug/L
√	d. Benzo(k)Fluoranthene [7]	0.0038 ug/L /Me#8270D/ ML 5ug/L, Me#610/ML 5ug/L& Me#625/ML 5ug/L
√	e. Chrysene [7]	0.0038 ug/L /Me#8270D/ML 5ug/L, Me#610/ML 5ug/L& Me#625/ML 5ug/L
√	f. Dibenzo(a,h)anthracene [7]	0.0038 ug/L /Me#8270D/ML 5ug/L, Me#610/ML 5ug/L& Me#625/ML 5ug/L
√	g. Indeno(1,2,3-cd) Pyrene [7]	0.0038 ug/L /Me#8270D/ML 5ug/L, Me#610/ML 5ug/L& Me#625/ML5ug/L
	36. Total Group II Polycyclic Aromatic Hydrocarbons (PAH)	100 ug/L
	h. Acenaphthene	X/Me#8270D/ML 5ug/L,Me#610/ML 5ug/L & Me#625/ML 5ug/L
	i. Acenaphthylene	X/Me#8270D/ML 5ug/L,Me#610/ML 5ug/L & Me#625/ML 5ug/L
	j. Anthracene	X/Me#8270D/ML 5ug/L,Me#610/ML 5ug/L & Me#625/ML 5ug/L
	k. Benzo(ghi) Perylene	X/Me#8270D/ML 5ug/L,Me#610/ML 5ug/L & Me#625/ML 5ug/L
	l. Fluoranthene	X/Me#8270D/ML 5ug/L,Me#610/ML 5ug/L & Me#625/ML 5ug/L
	m. Fluorene	X/Me#8270D/ML 5ug/L,Me#610/ML 5ug/L & Me#625/ML 5ug/L
	n. Naphthalene [5]	20 ug/l / Me#8270/ML 5ug/L, Me#610/ML 5ug/L & Me#625/ML 5ug/L
	o. Phenanthrene	X/Me#8270D/ML 5ug/L,Me#610/ML 5ug/L & Me#625/ML 5ug/L
	p. Pyrene	X/Me#8270D/ML5ug/L,Me#610/ML 5ug/L & Me#625/ML 5ug/L
√	37. Total Polychlorinated Biphenyls (PCBs) [8, 9]	0.000064 ug/L/Me# 608/ ML 0.5 ug/L
√	38. Chloride	Monitor only/Me# 300.0/ ML 0.1ug/L

	Metal parameter	Total Recoverable Metal Limit @ H [10]= 50 mg/l CaCO3 for discharges in Massachusetts (ug/l) [11/12]		Minimum level=ML	
		Freshwater	Saltwater		
	39. Antimony	5.6/ML 10			
	40. Arsenic **	10/ML20	36/ML 20		
	41. Cadmium **	0.2/ML10	8.9/ML 10		
	42. Chromium III (trivalent) **	48.8/ML15	100/ML 15		

	Metal parameter	Total Recoverable Metal Limit @ H [10]= 50 mg/l CaCO3 for discharges in Massachusetts (ug/l) 11/12		Minimum level=ML	
		Freshwater	Saltwater		
	43. Chromium VI (hexavalent) **	11.4/ML10	50.3/ML 10		
	44. Copper **	5.2/ML15	3.7/ML 15		
	45. Lead **	1.3/ML20	8.5/ML 20		
	46. Mercury **	0.9/ML0.2	1.1/ML 0.2		
	47. Nickel **	29/ML20	8.2/ML 20		
	48. Selenium **	5/ML20	71/ML 20		
	49. Silver	1.2/ML10	2.2/ML 10		
	50. Zinc **	66.6/ML15	85.6/ML 15		
	51. Iron	1,000/ML 20			

	Other Parameters	Limit
√	52. Instantaneous Flow	Site specific in CFS
√	53. Total Flow	Site specific in CFS
√	54. pH Range for Class A & Class B Waters in MA	6.5-8.3; 1/Month/Grab[13]
	55. pH Range for Class SA & Class SB Waters in MA	6.5-8.3; 1/Month/Grab[13]
	56. pH Range for Class B Waters in NH	6.5-8; 1/Month/Grab[13]
	57. Daily maximum temperature - Warm water fisheries	83°F; 1/Month/Grab[14]
	58. Daily maximum temperature - Cold water fisheries	68°F; 1/Month/Grab[14]
	59. Maximum Change in Temperature in MA - Any Class A water body	1.5°F; 1/Month/Grab[14]
	60. Maximum Change in Temperature in MA - Any Class B water body- Warm Water	5°F; 1/Month/Grab[14]
	61. Maximum Change in Temperature in MA – Any Class B water body - Cold water and Lakes/Ponds	3°F; 1/Month/Grab[14]
	62. Maximum Change in Temperature in MA – Any Class SA water body - Coastal	1.5°F; 1/Month/Grab[14]
	63. Maximum Change in Temperature in MA – Any Class SB water body - July to September	1.5°F; 1/Month/Grab[14]
	64. Maximum Change in Temperature in MA –Any Class SB water body - October to June	4°F; 1/Month/Grab[14]

Footnotes:

[1] Although the maximum values for TRC are 11ug/l and 7.5 ug/l for freshwater, and saltwater respectively, the compliance limits are equal to the minimum level (ML) of the test method used as listed in Appendix VI (i.e., Method 330.5, 20 ug/l).

[2] Limits for cyanide are based on EPA's water quality criteria expressed as micrograms per liter. There is currently no EPA approved test method for free cyanide. Therefore, total cyanide must be reported.
[3] Although the maximum values for cyanide are 5.2 ug/l and 1.0 ug/l for freshwater and saltwater, respectively, the compliance limits are equal to the minimum level (ML) of the Method 335.4 as listed in Appendix VI (i.e., 10 ug/l).
[4] BTEX = sum of Benzene, Toluene, Ethylbenzene, and total Xylenes.
[5] Naphthalene can be reported as both a purgeable (VOC) and extractable (SVOC) organic compound. If both VOC and SVOC are analyzed, the highest value must be used unless the QC criteria for one of the analyses is not met. In such cases, the value from the analysis meeting the QC criteria must be used.
[6] The sum of individual phthalate compounds(not including the #34, Bis (2-Ethylhexyl) Phthalate . The compliance limits are equal to the minimum level (ML) of the test method used as listed in Appendix VI.
Total values calculated for reporting on NOIs and discharge monitoring reports shall be calculated by adding the measured concentration of each constituent. If the measurement of a constituent is less than the ML, the permittee shall use a value of zero for that constituent. For each test, the permittee shall also attach the raw data for each constituent to the discharge monitoring report, including the minimum level and minimum detection level for the analysis.
[7] Although the maximum value for the individual PAH compounds is 0.0038 ug/l, the compliance limits are equal to the minimum level (ML) of the test method used as listed in Appendix VI.
[8] In the November 2002 WQC, EPA has revised the definition of Total PCBs for aquatic life as total PCBs is the sum of all homologue, all isomer, all congener, or all "Oroclor analyses."Total values calculated for reporting on NOIs and discharge monitoring reports shall be calculated by adding the measured concentration of each constituent. If the measure of a constituent is less than the ML, the permittee shall use a value of zero for that constituent. For each test, the permittee shall also attach the raw data for each constituent to the discharge monitoring report, including the minimum level and minimum detection level for the analysis.
[9]Although the maximum value for total PCBs is 0.000064 ug/l, the compliance limit is equal to the minimum level (ML) of the test method used as listed in Appendix VI (i.e., 0.5 ug/l for Method 608 or 0.00005 ug/l when Method 1668a is approved).
[10] Hardness. Cadmium, Chromium III, Copper, Lead, Nickel, Silver, and Zinc are Hardness Dependent.
[11] For a Dilution Factor (DF) from 1 to 5, metals limits are calculated using DF times the base limit for the metal. See Appendix IV. For example, iron limits are calculated using DF x 1,000ug/L (the iron base limit). Therefore DF is 1.5, the iron limit will be 1,500 ug/L; DF 2, then iron limit =1,000 x 2 =2,000 ug/L., etc. not to exceed the DF=5.
[12] Minimum Level (ML) is the lowest level at which the analytical system gives a recognizable signal and acceptable calibration point for the analyte. The ML represents the lowest concentration at which an analyte can be measured with a known level of confidence. The ML is calculated by multiplying the laboratory-determined method detection limit by 3.18 (see 40 CFR Part 136, Appendix B).
[13] pH sampling for compliance with permit limits may be performed using field methods as provided for in EPA test Method 150.1.
[14] Temperature sampling per Method 170.1

B. Suggested Form for Notice of Intent (NOI) for the Remediation General Permit

1. General facility/site information. Please provide the following information about the site:

a) Name of **facility/site**: Central Siphon Project		**Facility/site** mailing address:			
Location of **facility/site**: longitude: 42 deg, 17', 56.8" latitude: 71 deg, 25', 38.3"	Facility SIC code(s):	Street: 745 Worcester Road, Framingham, MA 01701			
b) Name of **facility/site owner:**		Town: Town of Framingham Department of Public Works			
Email address of facility/site owner:		State: Massachusetts	Zip: 01701	County: Middlesex	
Telephone no. of facility/site **owner**: 508-532-6020					
Fax no. of facility/site **owner**:		**Owner** is (check one): 1. Federal ___ 2. State/Tribal ___ 3. Private ___ 4. Other ___ if so, describe: Municipality			
Address of **owner** (if different from site):					
Street: 100 Western Avenue					
Town: Framingham	State: MA	Zip: 01702	County: Middlesex		
c) Legal name of **operator**: D'Allessandro Corporation	**Operator** telephone no: 508-559-6400				
	Operator fax no.:	**Operator** email: jbauld@dallessandro.com			
Operator contact name and title: John Bauld, Vice President					
Address of **operator** (if different from owner):	Street: 41 Ledin Drive				
Town: Avon	State: MA	Zip: 02322	County: Norfolk		

d) Check Y for "yes" or N for "no" for the following:
1. Has a prior NPDES permit exclusion been granted for the discharge? Y___ N___, if Y, number:___
2. Has a prior NPDES application (Form 1 & 2C) ever been filed for the discharge?
Y___ N___, if Y, date and tracking #:___
3. Is the discharge a "new discharge" as defined by 40 CFR 122.2? Y___ N___
4. For sites in Massachusetts, is the discharge covered under the Massachusetts Contingency Plan (MCP) and exempt from state permitting? Y___ N___

e) Is site/facility subject to any State permitting, license, or other action which is causing the generation of discharge? Y___ N___
If Y, please list:
1. site identification # assigned by the state of NH or MA:___
2. permit or license # assigned:___
3. state agency contact information: name, location, and telephone number:

f) Is the site/facility covered by any other EPA permit, including:
1. Multi-Sector General Permit? Y___ N___,
if Y, number:___
2. Final Dewatering General Permit? Y___ N___,
if Y, number:___
3. EPA Construction General Permit? Y___ N___,
if Y, number: MAR10DJ05
4. Individual NPDES permit? Y___ N___,
if Y, number:___
5. any other water quality related individual or general permit? Y___ N___, if Y, number:___

g) Is the site/facility located within or does it discharge to an Area of Critical Environmental Concern (ACEC)? Y___ N___

h) Based on the facility/site information and any historical sampling data, identify the sub-category into which the potential discharge falls.

Activity Category	**Activity Sub-Category**
I - Petroleum Related Site Remediation	A. Gasoline Only Sites ___ B. Fuel Oils and Other Oil Sites (including Residential Non-Business Remediation Discharges) ___ C. Petroleum Sites with Additional Contamination ___
II - Non Petroleum Site Remediation	A. Volatile Organic Compound (VOC) Only Sites ___ B. VOC Sites with Additional Contamination ___ C. Primarily Heavy Metal Sites ___
III - Contaminated Construction Dewatering	A. General Urban Fill Sites ___ B. Known Contaminated Sites ___

IV - Miscellaneous Related Discharges	A. Aquifer Pump Testing to Evaluate Formerly Contaminated Sites ☐ B. Well Development/Rehabilitation at Contaminated/Formerly Contaminated Sites ☐ C. Hydrostatic Testing of Pipelines and Tanks ☐ D. Long-Term Remediation of Contaminated Sumps and Dikes ☐ E. Short-term Contaminated Dredging Drain Back Waters (if not covered by 401/404 permit) ☐

2. Discharge information. Please provide information about the discharge, (attaching additional sheets as necessary) including:

a) Describe the discharge activities for which the owner/applicant is seeking coverage:

Discharge will be from dewatering associated with construction activities for the Town of Framingham Central Siphon/Sudbury River Interceptor Project.

b) Provide the following information about each discharge:

1) Number of discharge points: 4

2) What is the **maximum** and **average flow rate** of discharge (in cubic feet per second, ft^3/s)?
Max. flow 100 Is maximum flow a **design value**? Y ◉ N ○
Average flow (include units) 50 Is average flow a design value or estimate? Estimate

3) Latitude and longitude of each discharge within 100 feet:

pt.1: lat	42 deg, 17', 56.3" N	long	71 deg, 25', 37.2" W	pt.2: lat.	42 deg, 17', 56.6" N	long.	71 deg, 25', 39.9" W ;
pt.3: lat	42 deg, 17', 55.1" N	long	71 deg, 25', 37.4" W	pt.4: lat.	42 deg, 17', 54.9" N	long.	71 deg, 25', 35.9" W ;
pt.5: lat		long		pt.6: lat.		long.	;
pt.7: lat		long		pt.8: lat.		long.	; etc.

4) If hydrostatic testing, total volume of the discharge (gals):

5) Is the discharge intermittent ◉ or seasonal ○ ?
Is discharge ongoing? Y ○ N ◉

c) Expected dates of discharge (mm/dd/yy): start 06/01/2011 end 06/01/2012

d) Please attach a line drawing or flow schematic showing water flow through the facility including:
1. sources of intake water, 2. contributing flow from the operation, 3. treatment units, and 4. discharge points and receiving waters(s). Flow schematic drawing is included as Figure 1 of this submittal.

3. Contaminant information.

a) Based on the sub-category selected (see Appendix III), indicate whether each listed chemical is **believed present** or **believed absent** in the potential discharge. Attach additional sheets as needed.

Parameter *	CAS Number	Believed Absent	Believed Present	# of Samples	Sample Type (e.g., grab)	Analytical Method Used (method #)	Minimum Level (ML) of Test Method	Maximum daily value		Average daily value	
								concentration (ug/l)	mass (kg)	concentration (ug/l)	mass (kg)
1. Total Suspended Solids (TSS)		☐	☒	1	Grab	2540D	5,000 ug/L	31,000 ug/L	8.46	31,000 ug/L	8.46
2. Total Residual Chlorine (TRC)		☒	☐	1	Grab	4500CL	20 ug/L	<20 ug/L	<0.006	<20 ug/L	<0.006
3. Total Petroleum Hydrocarbons (TPH)		☒	☐	1	Grab	1664A	1,400 ug/L	<1,400 ug/L	<0.38	<1,400 ug/L	<0.38
4. Cyanide (CN)	57125	☒	☐	1	Grab	335.4	10 ug/L	<10 ug/L	<0.002	<10 ug/L	<0.002
5. Benzene (B)	71432	☒	☐	1	Grab	8260	1.0 ug/L	<1.0 ug/L	<0.0002	<1.0 ug/L	<0.0002
6. Toluene (T)	108883	☒	☐	1	Grab	8260	1.0 ug/L	<1.0 ug/L	<0.0002	<1.0 ug/L	<0.0002
7. Ethylbenzene (E)	100414	☒	☐	1	Grab	8260	1.0 ug/L	<1.0 ug/L	<0.0002	<1.0 ug/L	<0.0002
8. (m,p,o) Xylenes (X)	108883; 106423; 95476; 1330207	☒	☐	1	Grab	8260	1.0 ug/L	<1.0 ug/L	<0.0002	<1.0 ug/L	<0.0002
9. Total BTEX [2]	n/a	☒	☐	1	Grab	8260	1.0 ug/L	<1.0 ug/L	<0.0002	<1.0 ug/L	<0.0002
10. Ethylene Dibromide (EDB) (1,2-Dibromoethane) [3]	106934	☒	☐	1	Grab	504.1	20 ug/L	<20 ug/L	<0.006	<20 ug/L	<0.006
11. Methyl-tert-Butyl Ether (MtBE)	1634044	☒	☐	1	Grab	8260	1.0 ug/L	<1.0 ug/L	<0.0002	<1.0 ug/L	<0.0002
12. tert-Butyl Alcohol (TBA) (Tertiary-Butanol)	75650	☒	☐	1	Grab	8260	50 ug/L	<50 ug/L	<0.014	<50 ug/L	<0.014

* Numbering system is provided to allow cross-referencing to Effluent Limits and Monitoring Requirements by Sub-Category included in Appendix III, as well as the Test Methods and Minimum Levels associated with each parameter provided in Appendix VI.

[2] BTEX = Sum of Benzene, Toluene, Ethylbenzene, total Xylenes.

[3] EDB is a groundwater contaminant at fuel spill and pesticide application sites in New England.

Parameter *	CAS Number	Believed Absent	Believed Present	# of Samples	Sample Type (e.g., grab)	Analytical Method Used (method #)	Minimum Level (ML) of Test Method	Maximum daily value		Average daily value	
								concentration (ug/l)	mass (kg)	concentration (ug/l)	mass (kg)
13. tert-Amyl Methyl Ether (TAME)	9940508	☒	☐	1	Grab	8260	5.0 ug/L	<5.0 ug/L	<0.0014	<5.0 ug/L	<0.0014
14. Naphthalene	91203	☒	☐	1	Grab	8260	1.0 ug/L	<1.0 ug/L	<0.0002	<1.0 ug/L	<0.0002
15. Carbon Tetrachloride	56235	☒	☐	1	Grab	8260	1.0 ug/L	<1.0 ug/L	<0.0002	<1.0 ug/L	<0.0002
16. 1,2 Dichlorobenzene (o-DCB)	95501	☒	☐	1	Grab	8260	1.0 ug/L	<1.0 ug/L	<0.0002	<1.0 ug/L	<0.0002
17. 1,3 Dichlorobenzene (m-DCB)	541731	☒	☐	1	Grab	8260	1.0 ug/L	<1.0 ug/L	<0.0002	<1.0 ug/L	<0.0002
18. 1,4 Dichlorobenzene (p-DCB)	106467	☒	☐	1	Grab	8260	1.0 ug/L	<1.0 ug/L	<0.0002	<1.0 ug/L	<0.0002
18a. Total dichlorobenzene		☒	☐	1	Grab	8260	1.0 ug/L	<1.0 ug/L	<0.0002	<1.0 ug/L	<0.0002
19. 1,1 Dichloroethane (DCA)	75343	☒	☐	1	Grab	8260	1.0 ug/L	<1.0 ug/L	<0.0002	<1.0 ug/L	<0.0002
20. 1,2 Dichloroethane (DCA)	107062	☒	☐	1	Grab	8260	1.0 ug/L	<1.0 ug/L	<0.0002	<1.0 ug/L	<0.0002
21. 1,1 Dichloroethene (DCE)	75354	☒	☐	1	Grab	8260	1.0 ug/L	<1.0 ug/L	<0.0002	<1.0 ug/L	<0.0002
22. cis-1,2 Dichloroethene (DCE)	156592	☒	☐	1	Grab	8260	1.0 ug/L	<1.0 ug/L	<0.0002	<1.0 ug/L	<0.0002
23. Methylene Chloride	75092	☒	☐	1	Grab	8260	1.0 ug/L	<1.0 ug/L	<0.0002	<1.0 ug/L	<0.0002
24. Tetrachloroethene (PCE)	127184	☒	☐	1	Grab	8260	1.0 ug/L	<1.0 ug/L	<0.0002	<1.0 ug/L	<0.0002
25. 1,1,1 Trichloro-ethane (TCA)	71556	☒	☐	1	Grab	8260	1.0 ug/L	<1.0 ug/L	<0.0002	<1.0 ug/L	<0.0002
26. 1,1,2 Trichloro-ethane (TCA)	79005	☒	☐	1	Grab	8260	1.0 ug/L	<1.0 ug/L	<0.0002	<1.0 ug/L	<0.0002
27. Trichloroethene (TCE)	79016	☒	☐	1	Grab	8260	1.0 ug/L	<1.0 ug/L	<0.0002	<1.0 ug/L	<0.0002

Parameter *	CAS Number	Believed Absent	Believed Present	# of Samples	Sample Type (e.g., grab)	Analytical Method Used (method #)	Minimum Level (ML) of Test Method	Maximum daily value		Average daily value	
								concentration (ug/l)	mass (kg)	concentration (ug/l)	mass (kg)
28. Vinyl Chloride (Chloroethene)	75014	☒	☐	1	Grab	8260	1.0 ug/L	<1.0 ug/L	<0.0002	<1.0 ug/L	<0.0002
29. Acetone	67641	☒	☐	1	Grab	8260	25 ug/L	<25 ug/L	<0.006	<25 ug/L	<0.006
30. 1,4 Dioxane	123911	☒	☐	1	Grab	8260	1.0 ug/L	<1.0 ug/L	<0.0002	<1.0 ug/L	<0.0002
31. Total Phenols	108952	☒	☐	1	Grab	8270	10 ug/L	<10 ug/L	<0.002	<10 ug/L	<0.002
32. Pentachlorophenol (PCP)	87865	☒	☐	1	Grab	8270 SIM	0.80 ug/L	<0.80 ug/L	<0.0002	<0.80 ug/L	<0.0002
33. Total Phthalates (Phthalate esters) [4]		☒	☐	1	Grab	8270	5.0 ug/L	<5.0 ug/L	<0.0014	<5.0 ug/L	<0.0014
34. Bis (2-Ethylhexyl) Phthalate [Di-(ethylhexyl) Phthalate]	117817	☒	☐	1	Grab	8270	5.0 ug/L	<5.0 ug/L	<0.0014	<5.0 ug/L	<0.0014
35. Total Group I Polycyclic Aromatic Hydrocarbons (PAH)		☒	☐	1	Grab	8270 SIM	0.05 ug/L	1.24 ug/L	0.0004	1.24 ug/lL	0.0004
a. Benzo(a) Anthracene	56553	☐	☒	1	Grab	8270 SIM	0.04 ug/L	0.17 ug/L	0.00004	0.17 ug/L	0.00004
b. Benzo(a) Pyrene	50328	☐	☒	1	Grab	8270 SIM	0.05 ug/L	0.20 ug/L	0.00006	0.20 ug/L	0.00006
c. Benzo(b)Fluoranthene	205992	☐	☒	1	Grab	8270 SIM	0.05 ug/L	0.28 ug/L	0.00008	0.28 ug/L	0.00008
d. Benzo(k)Fluoranthene	207089	☐	☒	1	Grab	8270 SIM	0.05 ug/L	0.13 ug/L	0.00004	0.13 ug/L	0.00004
e. Chrysene	21801	☐	☒	1	Grab	8270 SIM	0.05 ug/L	0.17 ug/L	0.00004	0.17 ug/L	0.00004
f. Dibenzo(a,h)anthracene	53703	☐	☒	1	Grab	8270 SIM	0.05 ug/L	0.08 ug/L	0.00002	0.08 ug/L	0.00002
g. Indeno(1,2,3-cd) Pyrene	193395	☐	☒	1	Grab	8270 SIM	0.05 ug/L	0.21 ug/L	0.00006	0.21 ug/L	0.00002
36. Total Group II Polycyclic Aromatic Hydrocarbons (PAH)		☒	☐	1	Grab	8270	5.0 ug/L	0.17 ug/L	0.00004	0.17 ug/L	0.00004

[4] The sum of individual phthalate compounds.

Parameter *	CAS Number	Believed Absent	Believed Present	# of Samples	Sample Type (e.g., grab)	Analytical Method Used (method #)	Minimum Level (ML) of Test Method	Maximum daily value		Average daily value	
								concentration (ug/l)	mass (kg)	concentration (ug/l)	mass (kg)
h. Acenaphthene	83329	☒	☐	1	Grab	8270 SIM	0.05 ug/L	<0.05 ug/L	<0.00014	<0.05 ug/L	<0.00014
i. Acenaphthylene	208968	☒	☐	1	Grab	8270 SIM	0.05 ug/L	0.085 ug/L	0.00002	0.085 ug/L	0.00002
j. Anthracene	120127	☒	☐	1	Grab	8270	5.0 ug/L	<5.0 ug/L	<0.0014	<5.0 ug/L	<0.0014
k. Benzo(ghi) Perylene	191242	☒	☐	1	Grab	8270 SIM	3.0 ug/L	<3.0 ug/L	<0.0008	<3.0 ug/L	<0.0008
l. Fluoranthene	206440	☒	☐	1	Grab	8270	5.0 ug/L	<5.0 ug/L	<0.0014	<5.0 ug/L	<0.0014
m. Fluorene	86737	☒	☐	1	Grab	8270	5.0 ug/L	<5.0 ug/L	<0.0014	<5.0 ug/L	<0.0014
n. Naphthalene	91203	☒	☐	1	Grab	8270	5.0 ug/L	<5.0 ug/L	<0.0014	<5.0 ug/L	<0.0014
o. Phenanthrene	85018	☒	☐	1	Grab	8270 SIM	0.05 ug/L	0.087 ug/L	0.00002	0.087 ug/L	0.00002
p. Pyrene	129000	☒	☐	1	Grab	8270	5.0 ug/L	<5.0 ug/L	<0.0014	<5.0 ug/L	<0.0014
37. Total Polychlorinated Biphenyls (PCBs)	85687; 84742; 117840; 84662; 131113; 117817.	☐	☒	1	Grab	8082	65 ug/L	<65 ug/L	<0.018	<65 ug/L	<0.018
38. Chloride	16887006	☒	☐								
39. Antimony	7440360	☒	☐	1	Grab	6010	5.0 ug/L	<5.0 ug/L	<0.0014	<5.0 ug/L	<0.0014
40. Arsenic	7440382	☒	☐	1	Grab	6010	4.0 ug/L	<4.0 ug/L	<0.001	<4.0 ug/L	<0.001
41. Cadmium	7440439	☒	☐	1	Grab	6010	1.0 ug/L	<1.0 ug/L	<0.0002	<1.0 ug/L	<0.0002
42. Chromium III (trivalent)	16065831	☒	☐	1	Grab	6010	10 ug/L	<10 ug/L	<0.002	<10 ug/L	<0.002
43. Chromium VI (hexavalent)	18540299	☒	☐	1	Grab	53500CRD	10 ug/L	<10 ug/L	<0.002	<10 ug/L	<0.002
44. Copper	7440508	☒	☐	1	Grab	6010	1.0 ug/L	4.0 ug/L	0.001	4.0 ug/L	0.001
45. Lead	7439921	☒	☐	1	Grab	6010	2.0 ug/L	<2.0 ug/L	<0.0006	<2.0 ug/L	<0.0006
46. Mercury	7439976	☒	☐	1	Grab	7470	0.2 ug/L	<0.2 ug/L	<0.00006	<0.2 ug/L	<0.00006
47. Nickel	7440020	☒	☐	1	Grab	6010	1.0 ug/L	<1.0 ug/L	<0.0002	<1.0 ug/L	<0.0002
48. Selenium	7782492	☒	☐	1	Grab	6010	10 ug/L	<10 ug/L	<0.002	<10 ug/L	<0.002
49. Silver	7440224	☒	☐	1	Grab	6010	1.0 ug/L	<1.0 ug/L	<0.0002	<1.0 ug/L	<0.0002
50. Zinc	7440666	☒	☐	1	Grab	6010	2.0 ug/L	3.0 ug/L	0.0008	3.0 ug/L	0.0008
51. Iron	7439896	☒	☐	1	Grab	6010	2.0 ug/L	360 ug/L	0.098	360 ug/L	0.098
Other (describe):		☐	☐								

Parameter *	CAS Number	Believed Absent	Believed Present	# of Samples	Sample Type (e.g., grab)	Analytical Method Used (method #)	Minimum Level (ML) of Test Method	Maximum daily value		Average daily value	
								concentration (ug/l)	mass (kg)	concentration (ug/l)	mass (kg)
		☐	☐								
		☐	☐								

b) For discharges where **metals** are believed present, please fill out the following (attach results of any calculations):

Step 1: Do any of the metals in the influent exceed the effluent limits in Appendix III (i.e., the limits set at zero dilution)? Y ◉ N ○	If yes, which metals? Cadmium, Selenium
Step 2: For any metals which exceed the **Appendix III** limits, calculate the **dilution factor (DF)** using the formula in Part I.A.3.c (step 2) of the NOI instructions or as determined by the State prior to the submission of this NOI. What is the dilution factor for applicable metals? Metal: Cadmium DF: 5 Metal: Selenium DF: 5 Metal: DF: Metal: DF: Etc.	Look up the limit calculated at the corresponding dilution factor in **Appendix IV.** Do any of the metals in the **influent** have the potential to exceed the corresponding **effluent** limits in Appendix IV (i.e., is the influent concentration above the limit set at the calculated dilution factor)? Y ○ N ◉ If Y, list which metals:

4. Treatment system information. Please describe the treatment system using separate sheets as necessary, including:

a) A description of the treatment system, including a schematic of the proposed or existing treatment system:

The treatment system will consist of a 100 gallon per minute pump and treatment system that will include one of more fractionization (frac) tanks to store influent water and allow for particulate settling. From the frac trank(s), the groundwater will be pumped through particulate filter bags and then through granulated activated carbon (GAC) vessels to treat the groundwater to effluent discharge standards.

b) Identify each applicable treatment unit (check all that apply):	Frac. tank ☒	Air stripper ☐	Oil/water separator ☐	Equalization tanks ☐	Bag filter ☒	GAC filter ☒
	Chlorination ☐	De-chlorination ☐	Other (please describe):			

c) Proposed **average** and **maximum flow rates** (gallons per minute) for the discharge and the **design flow rate**(s) (gallons per minute) of the treatment system:
Average flow rate of discharge 50 gpm Maximum flow rate of treatment system 100 gpm
Design flow rate of treatment system 100 gpm

d) A description of chemical additives being used or planned to be used (attach MSDS sheets):

5. Receiving surface water(s). Please provide information about the receiving water(s), using separate sheets as necessary:

a) Identify the discharge pathway:	Direct to receiving water ☐	Within facility (sewer) ☐	Storm drain ☒	Wetlands ☐	Other (describe):

b) Provide a narrative description of the discharge pathway, including the name(s) of the receiving waters:
Treated groundwater will be pumped into roadside catch basins and discharged into the Sudbury River.

c) Attach a detailed map(s) indicating the site location and location of the outfall to the receiving water:
1. For multiple discharges, number the discharges sequentially.
2. For indirect dischargers, indicate the location of the discharge to the indirect conveyance and the discharge to surface water
The map should also include the location and distance to the nearest sanitary sewer as well as the locus of nearby sensitive receptors (based on USGS topographical mapping), such as surface waters, drinking water supplies, and wetland areas.

d) Provide the state water quality classification of the receiving water B

e) Provide the reported or calculated seven day-ten year low flow (7Q10) of the receiving water 4.32 cfs
Please attach any calculation sheets used to support stream flow and dilution calculations.

f) Is the receiving water a listed 303(d) water quality impaired or limited water? Y ◉ N ○ If yes, for which pollutant(s)? Metals

Is there a final TMDL? Y ○ N ◉ If yes, for which pollutant(s)?

6. ESA and NHPA Eligibility.
Please provide the following information according to requirements of Permit Parts I.A.4 and I.A.5 Appendices II and VII.

a) Using the instructions in Appendix VII and information on Appendix II, under which criterion listed in Part I.C are you eligible for coverage under this general permit?
A ___ B ___ C ___ D ___ E ___ F ___
b) If you selected Criterion D or F, has consultation with the federal services been completed? Y___ N___ Underway___

c) If consultation with U.S. Fish and Wildlife Service and/or NOAA Fisheries Service was completed, was a written concurrence finding that the discharge is "not likely to adversely affect" listed species or critical habitat received? Y___ N___

d) Attach documentation of ESA eligibility as described in the NOI instructions and required by Appendix VII, Part I.C, Step 4.

e) Using the instructions in Appendix VII, under which criterion listed in Part II.C are you eligible for coverage under this general permit?
1 ___ 2 ___ 3 ___

f) If Criterion 3 was selected, attach all written correspondence with the State or Tribal historic preservation officers, including any terms and conditions that outline measures the applicant must follow to mitigate or prevent adverse effects due to activities regulated by the RGP.

7. Supplemental information.

Please provide any supplemental information. Attach any analytical data used to support the application. Attach any certification(s) required by the general permit.

8. Signature Requirements: The Notice of Intent must be signed by the operator in accordance with the signatory requirements of 40 CFR Section 122.22, including the following certification:

I certify under penalty of law that this document and all attachments were prepared under my direction or supervision in accordance with a system designed to assure that qualified personnel properly gather and evaluate the information submitted. Based on my inquiry of the person or persons who manage the system, or those persons directly responsible for gathering the information, I certify that the information submitted is, to the best of my knowledge and belief, true, accurate, and complete. I certify that I am aware that there are significant penalties for submitting false information, including the possibility of fine and imprisonment for knowing violations.

Facility/Site Name:	
Operator signature:	
Printed Name & Title:	John F. Bauld Senior Project Manager
Date:	5/30/11

05/31/2011 14:27 FAX 002/002

B. Submission of NOI to EPA - All operators applying for coverage under this General Permit must submit a completed Notice of Intent (NOI) to EPA. Signed and completed NOI forms and attachments must be submitted to EPA-NE at:

U.S. Environmental Protection Agency
5 Post Office Square, Suite 100
Mail Code OEP06-4
Boston, MA 02109-3912
ATTN: Remediation General Permit NOI Processing

or electronically mailed to NPDES.Generalpermits@epa.gov

or faxed to the EPA Office at 617-918-0505

If filling out the suggested NOI form electronically on EPA's website, the signature page must be signed and faxed or mailed to EPA at the fax number and/or address listed above.

1. Filing with the states - A copy of any NOI form filed with EPA-NE must also be filed with state agencies. The state agency may elect to develop a state specific form or other information requirements.

a) Discharges in Massachusetts - In addition to the NOI, permit applicants must submit copies of the State Application Form BRPWM 12, Request for General Permit coverage for the RGP. The application form and the Transmittal Form for Permit Application and Payment may be obtained from the Massachusetts Department of Environmental Protection (MassDEP) website at www.state.ma.us/dep. Municipalities are fee-exempt, but should send a copy of the transmittal form to that address for project tracking purposes. All applicants should keep a copy of the transmittal form and a copy of the application package for their records.

1) A copy of the NOI, the transmittal form, a copy of the check, and Form BRPWM 12 should be sent to:

Massachusetts Department of Environmental Protection
Division of Watershed Management
627 Main Street, 2nd floor
Worcester, MA 01608

2) A copy of the transmittal form and the appropriate fee should be sent to:

Massachusetts Department of Environmental Protection
P.O. Box 4062
Boston, MA 02111

Please note: Applicants for discharges in Massachusetts should note that under 310 CMR 40.000, *as a matter of state law*, the general permit only applies to discharges that are **not** subject to the

Massachusetts Contingency Plan (MCP) and 310 CMR 40.000. Therefore, discharges subject to the MCP are **not** required to fill out and submit the State Application Form BRPWM 12 or pay the state fees. However, they must submit a NOI to EPA.

b) Discharges in New Hampshire - applicants must provide a copy of the Notice of Intent to:

New Hampshire Department of Environmental Services
Water Division
Wastewater Engineering Bureau
P.O. Box 95
Concord, New Hampshire 03302-0095.

2. Filing with Municipalities - A copy of the NOI must be submitted to the municipality in which the proposed discharge would be located.

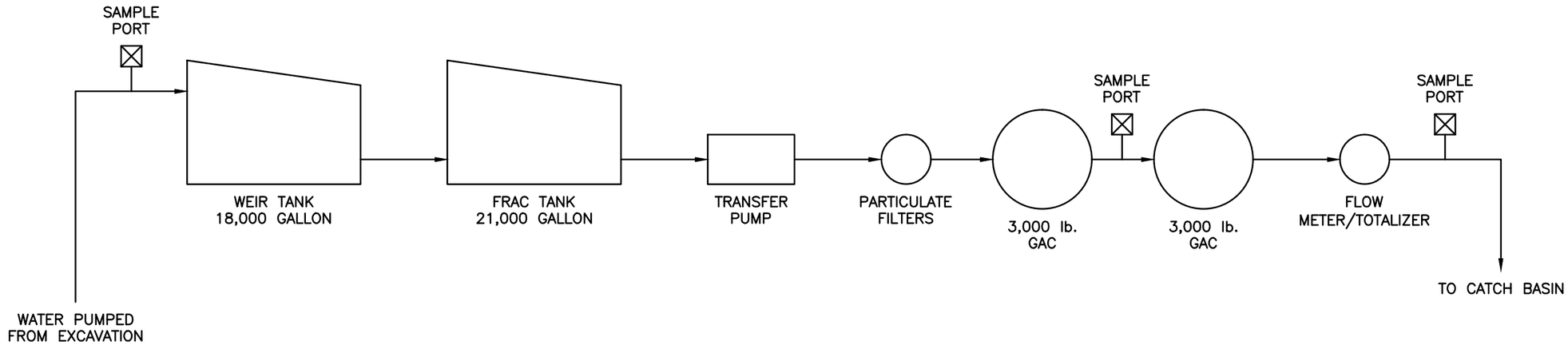

PROCESS FLOW DIAGRAM
100 GALLON PER MINUTE
DEWATERING TREATMENT SYSTEM

N.T.S.

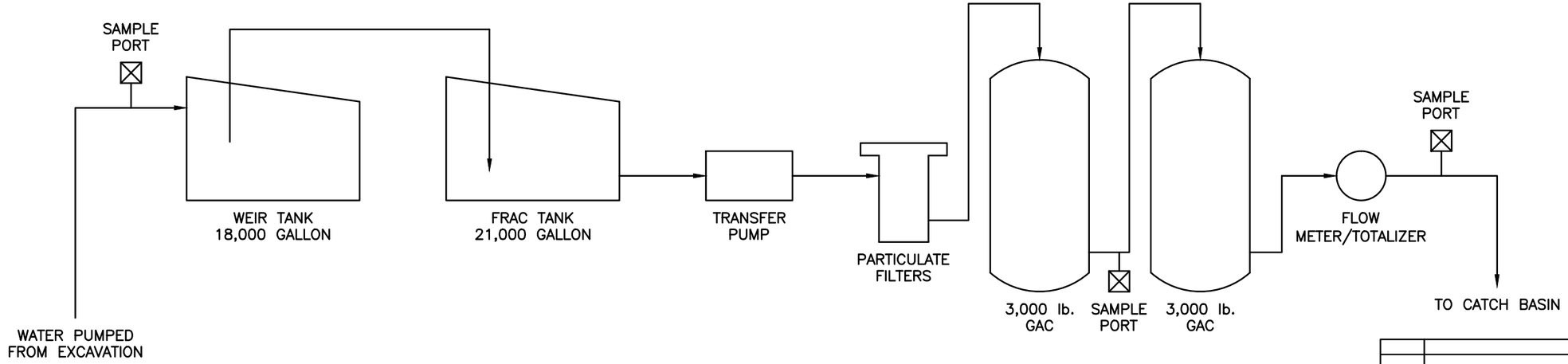

NOTE:

THIS PROCESS FLOW DIAGRAM IS INTENDED TO SHOW A SCHEMATIC LAYOUT OF THE PROPOSED GAC SYSTEM ONLY. ALL HOSES, COUPLINGS, CONNECTIONS, VALVES, FITTINGS, PUMPS AND NECESSARY SAFETY MECHANISMS SHOULD BE PROPERLY SIZED, INSTALLED AND MAINTAINED BY THE CONTRACTOR.

UNLESS SPECIFICALLY STATED BY WRITTEN AGREEMENT, THIS DRAWING IS THE SOLE PROPERTY OF GZA GEOENVIRONMENTAL, INC. (GZA). THE INFORMATION SHOWN ON THE DRAWING IS SOLELY FOR USE BY GZA'S CLIENT OR THE CLIENT'S DESIGNATED REPRESENTATIVE FOR THE SPECIFIC PROJECT AND LOCATION IDENTIFIED ON THE DRAWING. THE DRAWING SHALL NOT BE TRANSFERRED, REUSED, COPIED, OR ALTERED IN ANY MANNER FOR USE AT ANY OTHER LOCATION OR FOR ANY OTHER PURPOSE WITHOUT THE PRIOR WRITTEN CONSENT OF GZA. ANY TRANSFER, REUSE, OR MODIFICATION TO THE DRAWING BY THE CLIENT OR OTHERS, WITHOUT THE PRIOR WRITTEN EXPRESS CONSENT OF GZA, WILL BE AT THE USER'S SOLE RISK AND WITHOUT ANY RISK OR LIABILITY TO GZA.

NO.	ISSUE/DESCRIPTION	BY	DATE

CENTRAL SIPHON PROJECT
FRAMINGHAM, MASSACHUSETTS

PROCESS FLOW DIAGRAM
100 GALLON PER MINUTE

PREPARED BY:
GZA GeoEnvironmental, Inc.
Engineers and Scientists
1 EDGEWATER DRIVE
NORWOOD, MASSACHUSETTS 02062
(781) 278-3700

PREPARED FOR:
D'ALLESSANDRO CORPORATION

PROJ MGR: RFM	REVIEWED BY: RFM	CHECKED BY: SMO	FIGURE 1
DESIGNED BY: SMO	DRAWN BY: DP	SCALE: NOT TO SCALE	
DATE 05-12-11	PROJECT NO. 02.0170688.00	REVISION NO. 0	SHEET NO. 1 OF 1

© 2011 – GZA GeoEnvironmental, Inc. GZA-K:\170688\170688-00.INW\Figures\170688_Central Siphon Project_Process Flow Diagram.dwg [FIGURE 3] May 12, 2011 – 4:19pm dmitrios.palantzas

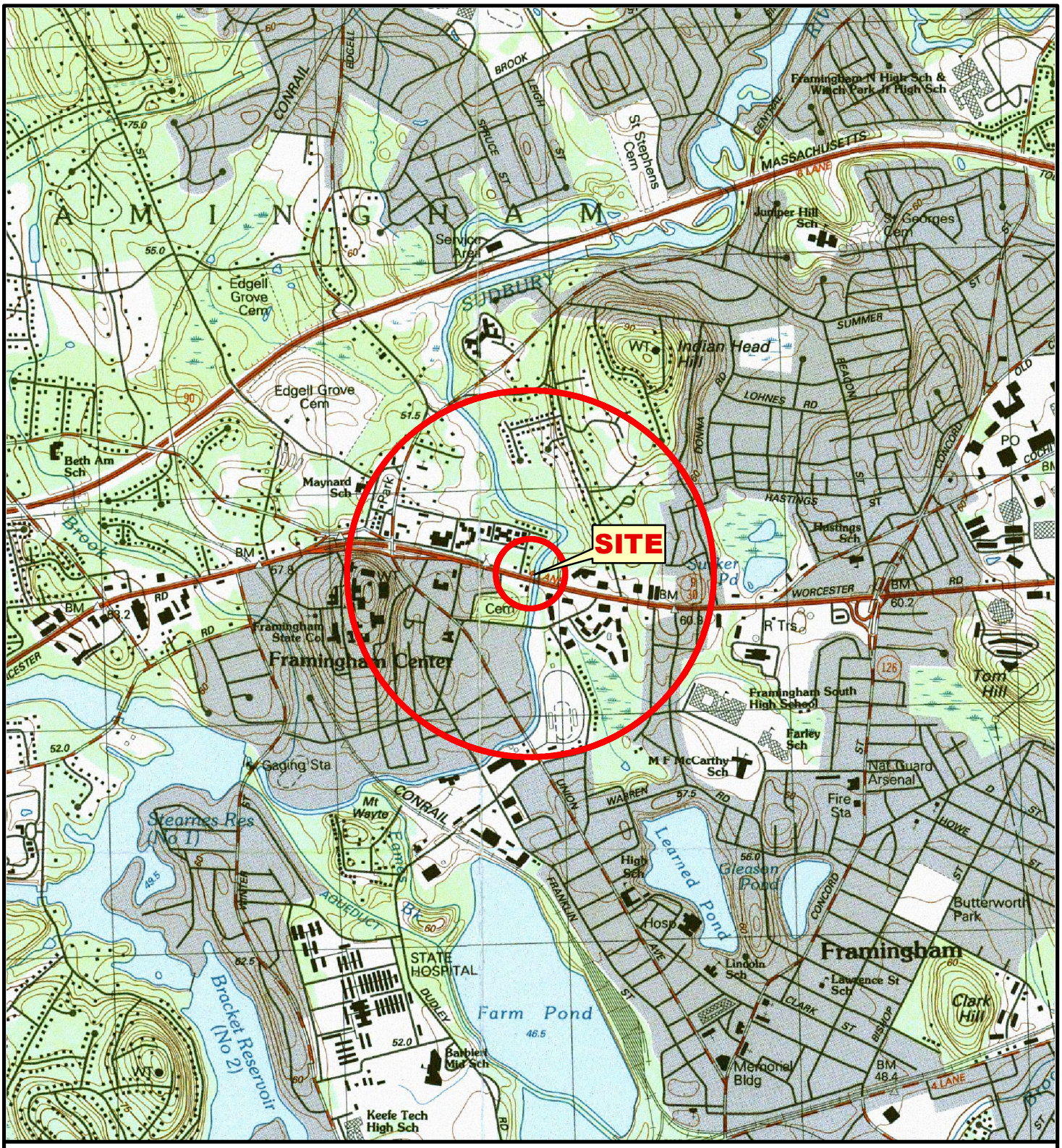

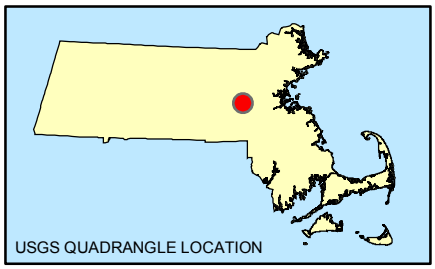

SOURCE : SCANNED USGS TOPOGRAPHIC QUADRANGLES SCANNED BY THE MASSACHUSETTS EXECUTIVE OFFICE OF ENVIRONMENTAL AFFAIRS, MASSGIS. DISTRIBUTED JUNE, 2001.

Data Supplied by : MASS GIS

0 1,000 2,000 4,000 6,000 Feet

N W E S

PROJ. MGR.: RFM
DESIGNED BY: SMO
REVIEWED BY: JER
OPERATOR: EMD

DATE: 05-13-2011

LOCUS PLAN

745 WORCESTER ROAD
FRAMINGHAM, MASSACHUSETTS

JOB NO. 02.0170688.000

FIGURE NO. 2

© 2011 - GZA GeoEnvironmental, Inc., K:\170688\170688-00.RFM\Figures\GIS\MXDs\170688-00_LocusPlan-v1_FIG-2.mxd, 5/13/2011, 11:02:22 AM, elaine.donohue

© 2011 - GZA GeoEnvironmental, Inc., K:\170688\170688-00.RFM\Figures\GIS\MXDs\17068-00_NHESP-Priority-Estimated-Habitats_FIG-3.mxd, 5/13/2011, 12:46:15 PM, elaine.donohue

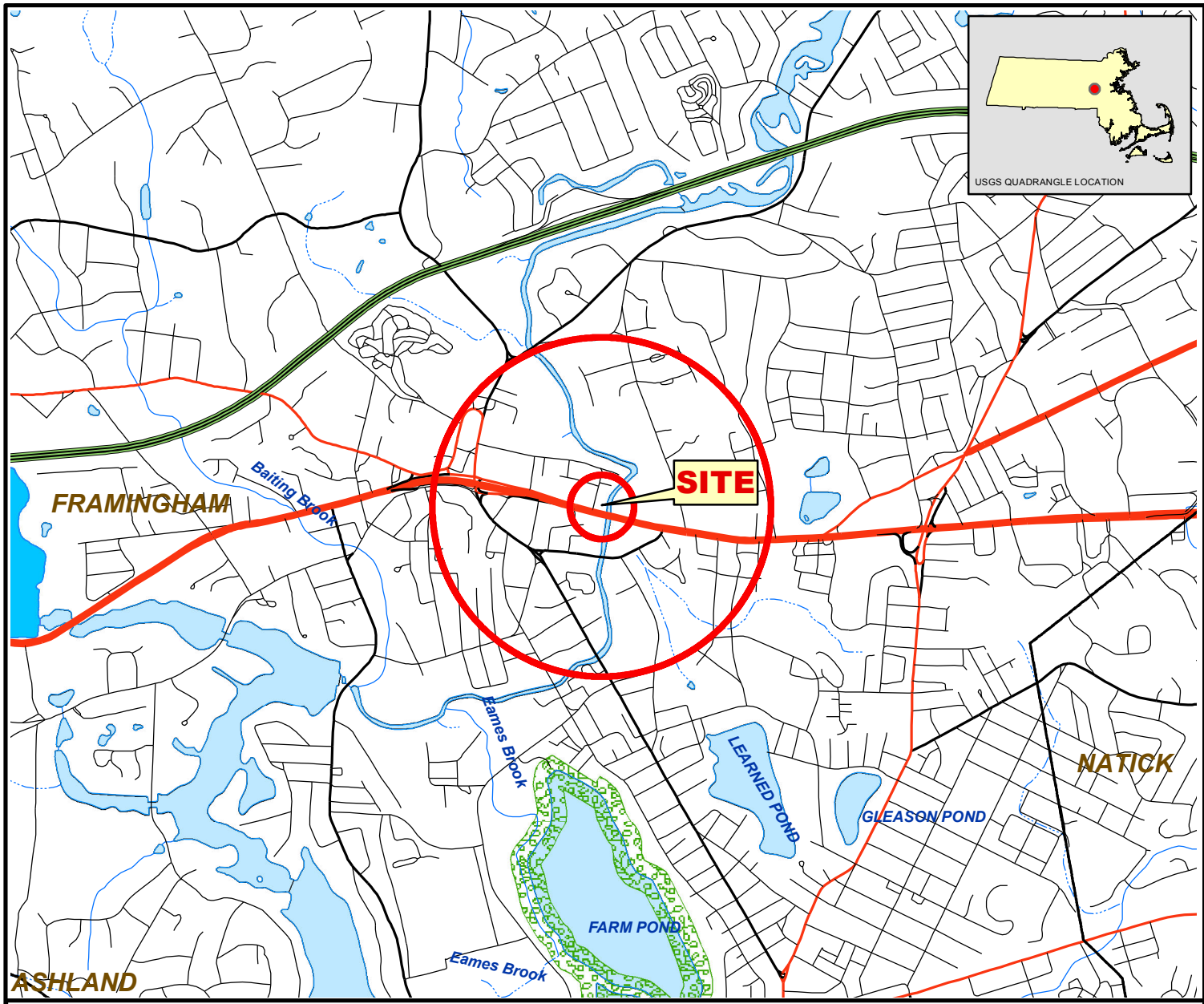

LEGEND

- NHESP 2008 Estimated Habitats of Rare Wildlife: Use with MA Wetlands Protection Act (310 CMR 10.12)
- NHESP 2008 Priority Habitats of State-Listed Rare Species: Use with MA Wetlands Protection Act (310 CMR 10.12)

Hydrography

- Lake, Pond, Wide River, Impoundment
- Reservoir (with PWSID)

Rivers and Streams

- Stream
- Intermittent Stream
- Shoreline

EOT-OTP Roads

- Limited Access Highway
- Multi-Lane Highway, Unlimited Access
- Other Numbered Highway
- Major Road - Connector
- Minor Street or Road

SOURCE:

Priority and Estimated Habitats have been delineated by the Natural Heritage and Endangered Species Program of the Division of Fisheries and Wildlife. These layers are used for screening Projects and Activities that may impact state-listed rare species and their habitats. Priority and Estimated Habitat maps have been delineated based on the Best Scientific Evidence Available and according to the regulations of the Massachusetts Endangered Species Act (321 CMR 10.12) using documented records of rare species and various spatial layers.
The NHESP data was supplied by MassGIS in October 2008, the EOT-OTP Roads data was supplied by MassGIS in October 2009 and the Hydrography & Rivers and Streams data was supplied by MassGIS in March 2010.

Natural Heritage & Endangered Species Program

MassWildlife
Massachusetts Division of Fisheries & Wildlife
Wayne F. MacCallum, Director
Natural Heritage & Endangered Species

N
W E
S

0 1,000 2,000 4,000
SCALE IN FEET

2008 PRIORITY HABITAT AND ESTIMATED HABITAT NATURAL HERITAGE & ENDANGERED SPECIES PROGRAM

745 WORCESTER ROAD FRAMINGHAM, MASSACHUSETTS

GZA GeoEnvironmental, Inc.
One Edgewater Drive
Norwood, MA 02062
(P) 781-278-3700

JOB NO.
02.0170688.00

PROJ. MGR.: RFM
DESIGNED BY.: SMO
REVIEWED BY.: JER
OPERATOR.: EMD
DATE: 05-13-2011

FIGURE NO.
3

FEDERALLY LISTED ENDANGERED AND THREATENED SPECIES IN MASSACHUSETTS

COUNTY	SPECIES	FEDERAL STATUS	GENERAL LOCATION/HABITAT	TOWNS
Barnstable	Piping Plover	Threatened	Coastal Beaches	All Towns
	Roseate Tern	Endangered	Coastal beaches and the Atlantic Ocean	All Towns
	Northeastern beach tiger beetle	Threatened	Coastal Beaches	Chatham
	Sandplain gerardia	Endangered	Open areas with sandy soils.	Sandwich and Falmouth.
	Northern Red-bellied cooter	Endangered	Inland Ponds and Rivers	Bourne (north of the Cape Cod Canal)
Berkshire	Bog Turtle	Threatened	Wetlands	Egremont and Sheffield
Bristol	Piping Plover	Threatened	Coastal Beaches	Fairhaven, Dartmouth, Westport
	Roseate Tern	Endangered	Coastal beaches and the Atlantic Ocean	Fairhaven, New Bedford, Dartmouth, Westport
	Northern Red-bellied cooter	Endangered	Inland Ponds and Rivers	Raynham and Taunton
Dukes	Roseate Tern	Endangered	Coastal beaches and the Atlantic Ocean	All Towns
	Piping Plover	Threatened	Coastal Beaches	All Towns
	Northeastern beach tiger beetle	Threatened	Coastal Beaches	Aquinnah and Chilmark
	Sandplain gerardia	Endangered	Open areas with sandy soils.	West Tisbury
Essex	Small whorled Pogonia	Threatened	Forests with somewhat poorly drained soils and/or a seasonally high water table	Gloucester, Essex and Manchester
	Piping Plover	Threatened	Coastal Beaches	Glocester, Essex, Ipswich, Rowley, Revere, Newbury, Newburyport and Salisbury
Franklin	Northeastern bulrush	Endangered	Wetlands	Montague
	Dwarf wedgemussel	Endangered	Mill River	Whately
Hampshire	Small whorled Pogonia	Threatened	Forests with somewhat poorly drained soils and/or a seasonally high water table	Hadley
	Puritan tiger beetle	Threatened	Sandy beaches along the Connecticut River	Northampton and Hadley
	Dwarf wedgemussel	Endangered	Rivers and Streams.	Hadley, Hatfield, Amherst and Northampton
Hampden	Small whorled Pogonia	Threatened	Forests with somewhat poorly drained soils and/or a seasonally high water table	Southwick
Middlesex	Small whorled Pogonia	Threatened	Forests with somewhat poorly drained soils and/or a seasonally high water table	Groton
Nantucket	Piping Plover	Threatened	Coastal Beaches	Nantucket
	Roseate Tern	Endangered	Coastal beaches and the Atlantic Ocean	Nantucket
	American burying beetle	Endangered	Upland grassy meadows	Nantucket
Plymouth	Piping Plover	Threatened	Coastal Beaches	Scituate, Marshfield, Duxbury, Plymouth, Wareham and Mattapoisett
	Northern Red-bellied cooter	Endangered	Inland Ponds and Rivers	Kingston, Middleborough, Carver, Plymouth, Bourne, and Wareham
	Roseate Tern	Endangered	Coastal beaches and the Atlantic Ocean	Plymouth, Marion, Wareham, and Mattapoisett.
Suffolk	Piping Plover	Threatened	Coastal Beaches	Winthrop
Worcester	Small whorled Pogonia	Threatened	Forests with somewhat poorly drained soils and/or a seasonally high water table	Leominster

-Eastern cougar and gray wolf are considered extirpated in Massachusetts.
-Endangered gray wolves are not known to be present in Massachusetts, but dispersing individuals from source populations in Canada may occur statewide.
-Critical habitat for the Northern Red-bellied cooter is present in Plymouth County.

7/31/2008

USGS
Massachusetts StreamStats

Streamstats Ungaged Site Report

Date: Tue May 10 2011 09:33:05 Mountain Daylight Time
Site Location: Massachusetts
NAD27 Latitude: 42.2991 (42 17 57)
NAD27 Longitude: -71.4273 (-71 25 38)
NAD83 Latitude: 42.2992 (42 17 57)
NAD83 Longitude: -71.4268 (-71 25 37)
ReachCode: 01070005000051
Measure: 48.85
Drainage Area: 80.7 mi2

Low Flows Basin Characteristics

100% Statewide Low Flow (80.7 mi2)

Parameter	Value	Regression Equation Valid Range	
		Min	Max
Drainage Area (square miles)	80.7	1.61	149
Mean Basin Slope from 250K DEM (percent)	3.13	0.32	24.6
Stratified Drift per Stream Length (square mile per mile)	0.13	0	1.29
Massachusetts Region (dimensionless)	0	0	1

Probability of Perennial Flow Basin Characteristics

100% Perennial Flow Probability (80.7 mi2)

Parameter	Value	Regression Equation Valid Range	
		Min	Max
Drainage Area (square miles)	80.7 (above max value 1.99)	0.01	1.99
Percent Underlain By Sand And Gravel (percent)	33.64	0	100
Percent Forest (percent)	46.14	0	100
Massachusetts Region (dimensionless)	0	0	1

Warning: Some parameters are outside the suggested range. Estimates will be extrapolations with unknown errors.

Low Flows Streamflow Statistics

Statistic	Flow (ft^3/s)	Prediction Error (percent)	Equivalent years of record	90-Percent Prediction Interval	
				Minimum	Maximum
D50	84.1	18		42.5	166
D60	64	20		29.9	136
D70	39.4	24		14.4	107
D75	30.9	26		11.2	84.5
D80	23.9	28		8.39	67.2
D85	18.7	32		6.58	52.2
D90	13.9	37		4.63	41.1
D95	9.07	46		2.71	29.3
D98	5.83	60		1.51	21.3
D99	4.65	65		1.14	17.8
M7D2Y	9.55	50		2.65	33.1
AUGD50	19.6	33		6.88	54.7
M7D10Y	4.32	71		1	17.4

The equation for estimating the probability of perennial flow is applicable for most areas of Massachusetts except eastern Buzzards Bay, Cape Cod, and the Island regions. The estimate obtained from the equation assumes natural flow conditions at the site. The equation also is best used for sites with drainage areas between 0.01 to 1.99 mi2, as errors beyond for basins beyond these bounds are unknown.

Probability of Perennial Flow Statistics

Statistic	Value	Standard Error (percent)
PROBPEREN	1	

Watershed Assessment, Tracking & Environmental Results

Return to home page

On This Page

Causes of Impairment
Probable Sources Contributing to Impairments

2006 Waterbody Report for Sudbury River

Waterbody Map Not Available

Frequent Questions

About This Database (Integrated Report)
Assessing Water Quality (Questions and Answers)
Integrated Reporting Guidance
Previous National Water Quality Reports
EnviroMapper for Water
AskWATERS
EPA WATERS Homepage
Exchange Network
Assessment Database
Statewide Statistical Surveys
Draft statistical survey web report
Demo of statistical survey template (mpeg4, 101MB zipped)

State: Massachusetts
Waterbody ID: MA82A-26_2006
Location: From The Outlet Of Framingham Reservoir #1, Framingham To The Inlet Of Saxonville Pond, Framingham (Formerly Part Of Segment Ma82a-02).
State Waterbody Type: River
EPA Waterbody Type: Rivers and Streams
Water Size: 2.764
Units: miles
Watershed Name:

Water Quality Assessment Status for Reporting Year 2006

The overall status of this waterbody is Impaired.

Description of this table

Designated Use	Designated Use Group	Status
Overall Use	Fish, Shellfish, And Wildlife Protection And Propagation	Impaired

Causes of Impairment for Reporting Year 2006

Description of this table

http://iaspub.epa.gov/tmdl_waters10/attains_waterbody.control?p_au_id=MA82A-26_2006&p_cycle=2006&p_state=MA&p_report_type=T Last updated on Monday, May 16, 2011

Cause of Impairment	Cause of Impairment Group	Designated Use(s)	State TMDL Development Status
Cause Unknown	Cause Unknown	Overall Use	
Metals	Metals (other than Mercury)	Overall Use	

Probable Sources Contributing to Impairment for Reporting Year 2006

No probable source data have been reported to EPA for this waterbody.

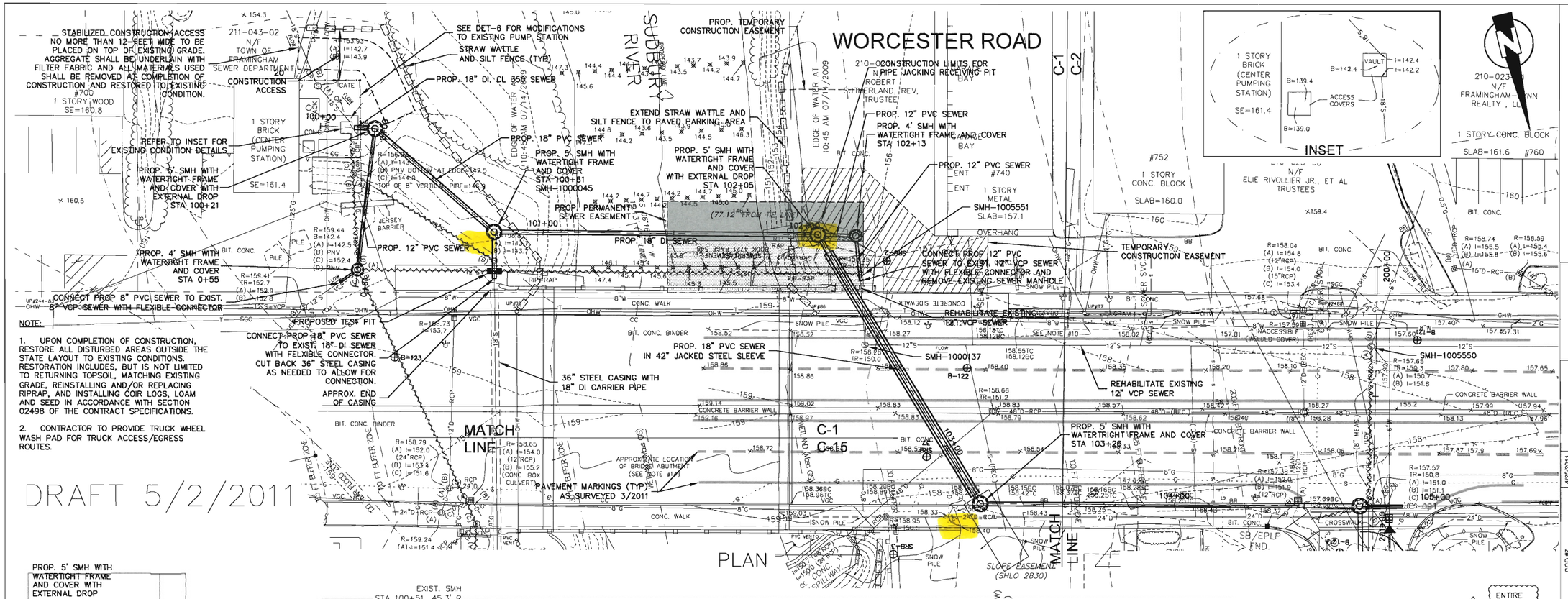

NOTE:

1. UPON COMPLETION OF CONSTRUCTION, RESTORE ALL DISTURBED AREAS OUTSIDE THE STATE LAYOUT TO EXISTING CONDITIONS. RESTORATION INCLUDES, BUT IS NOT LIMITED TO RETURNING TOPSOIL, MATCHING EXISTING GRADE, REINSTALLING AND/OR REPLACING RIPRAP, AND INSTALLING COIR LOGS, LOAM AND SEED IN ACCORDANCE WITH SECTION 02498 OF THE CONTRACT SPECIFICATIONS.

2. CONTRACTOR TO PROVIDE TRUCK WHEEL WASH PAD FOR TRUCK ACCESS/EGRESS ROUTES.

DRAFT 5/2/2011

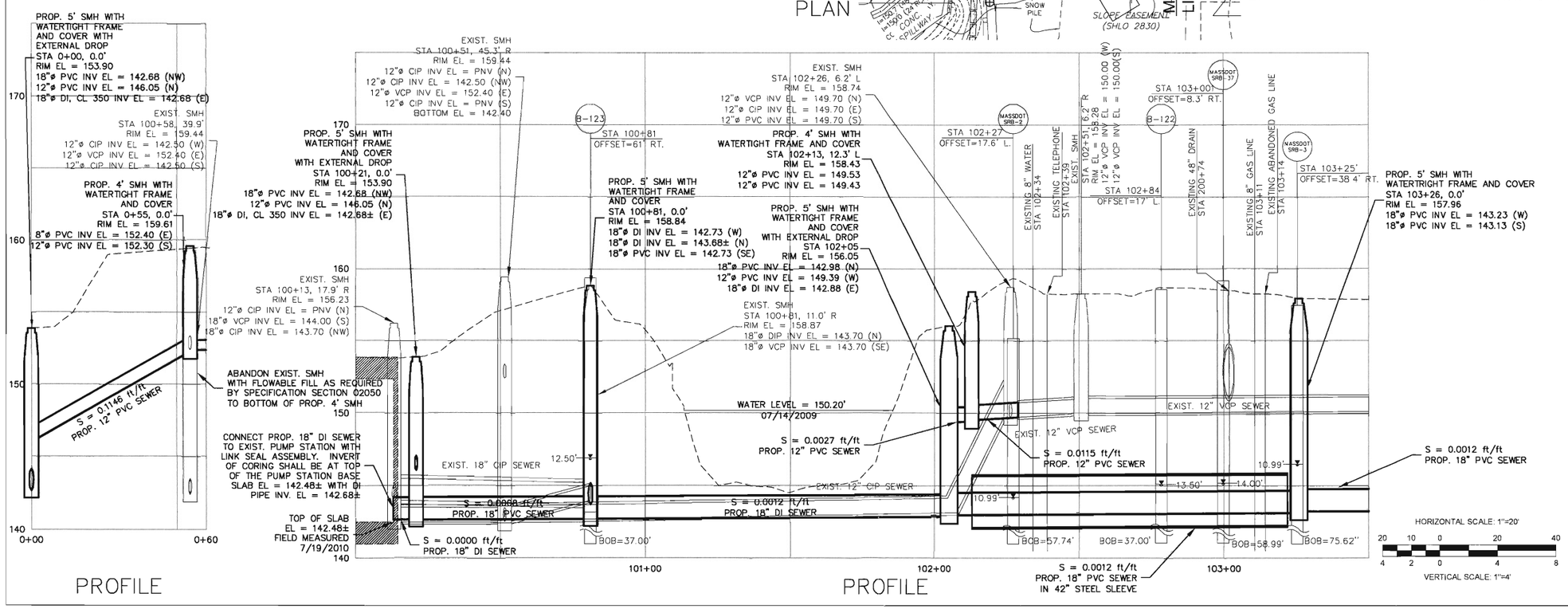

Date	Description
4/25/2011	CCD #7
3/16/2011	MASSDOT LETTER 3-16-2011
9/14/10	CCD #2
1/27/10	CONFORMED
12/08/09	ADDENDUM #1
Date	Description
	REVISIONS

SEA CONSULTANTS INC.
Scientists/Engineers/Architects

Scale	AS NOTED
Date	FEBRUARY 2010
Job No.	200912301-A
Designed by	SPG
Drawn by	DRM
Checked by	SPG
Approved by	JJS

Client: TOWN OF FRAMINGHAM DEPARTMENT OF PUBLIC WORKS SEWER DIVISION

Project: CENTRAL STREET SIPHON & SUDBURY RIVER INTERCEPTOR REHABILITATION

Drawing: WORCESTER ROAD PLAN AND PROFILE STA 100+00 TO STA 103+50

Sheet C-1

PLOT DATE=5/2/2011 10:58:31 AM USER=DANIEL MCCORMACK FILENAME=G:_clients\Framingham MA\200912302A - SRI CA Services\Civil\CCD7_091234BEULAH-WORCESTER-PLAN AND PROFILE.dwg

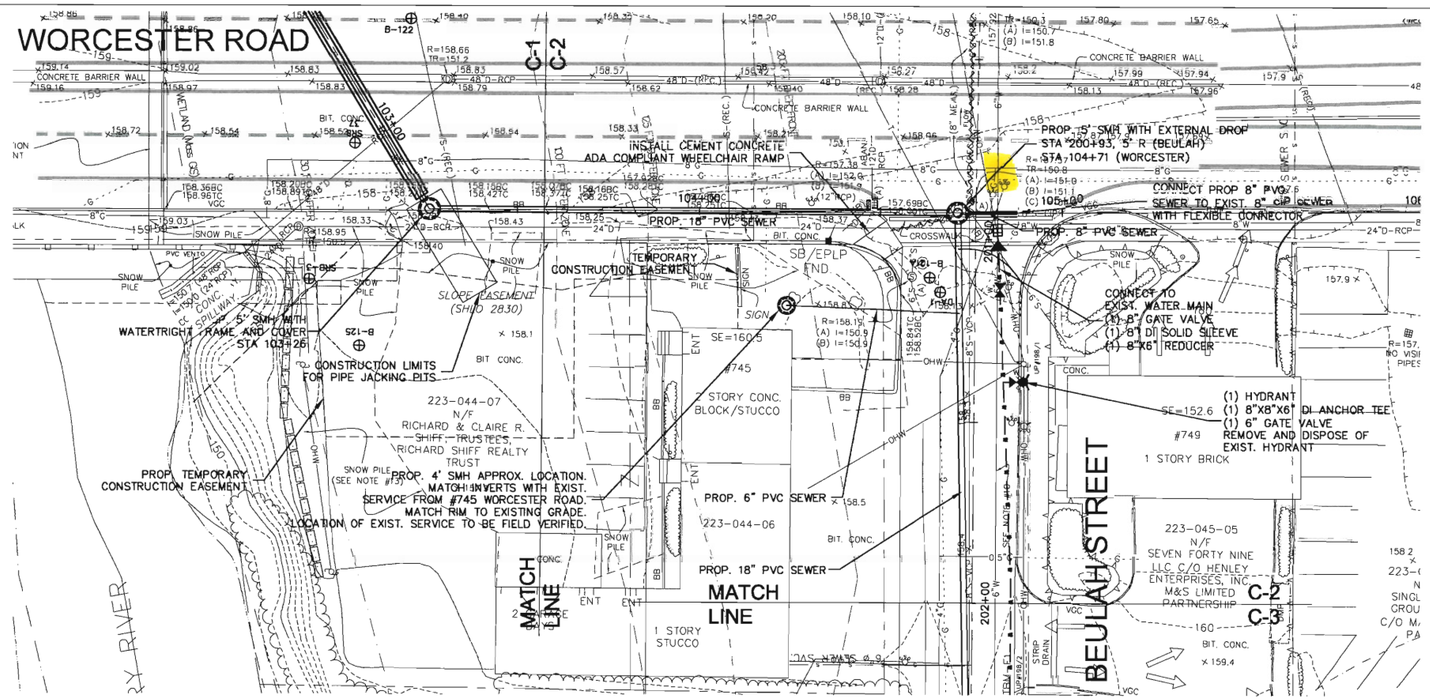

DRAFT 5/2/2011

PLAN

NOTE:

1. PROVIDE NEW SEWER SERVICES FROM THE PROP 18" ø PVC SEWER TO THE PROPERTY LINE AND CONNECT EXISTING SERVICES AS REQUIRED IN THE SPECIFICATIONS.

2. REMOVE EXISTING WATER SERVICES BETWEEN THE CURB STOPS AND THE CORPORATION STOPS ALONG THE WATER MAIN IN BEULAH STREET. INSTALL NEW COPPER WATER SERVICES FROM PROPOSED 8" WATER MAIN TO THE CURB STOPS, INCLUDING CORPORATION STOPS.

3. REMOVE AND REINSTALL STONE BOUNDS. FINAL SURVEY BY OTHERS.

2 ENTIRE SHEET

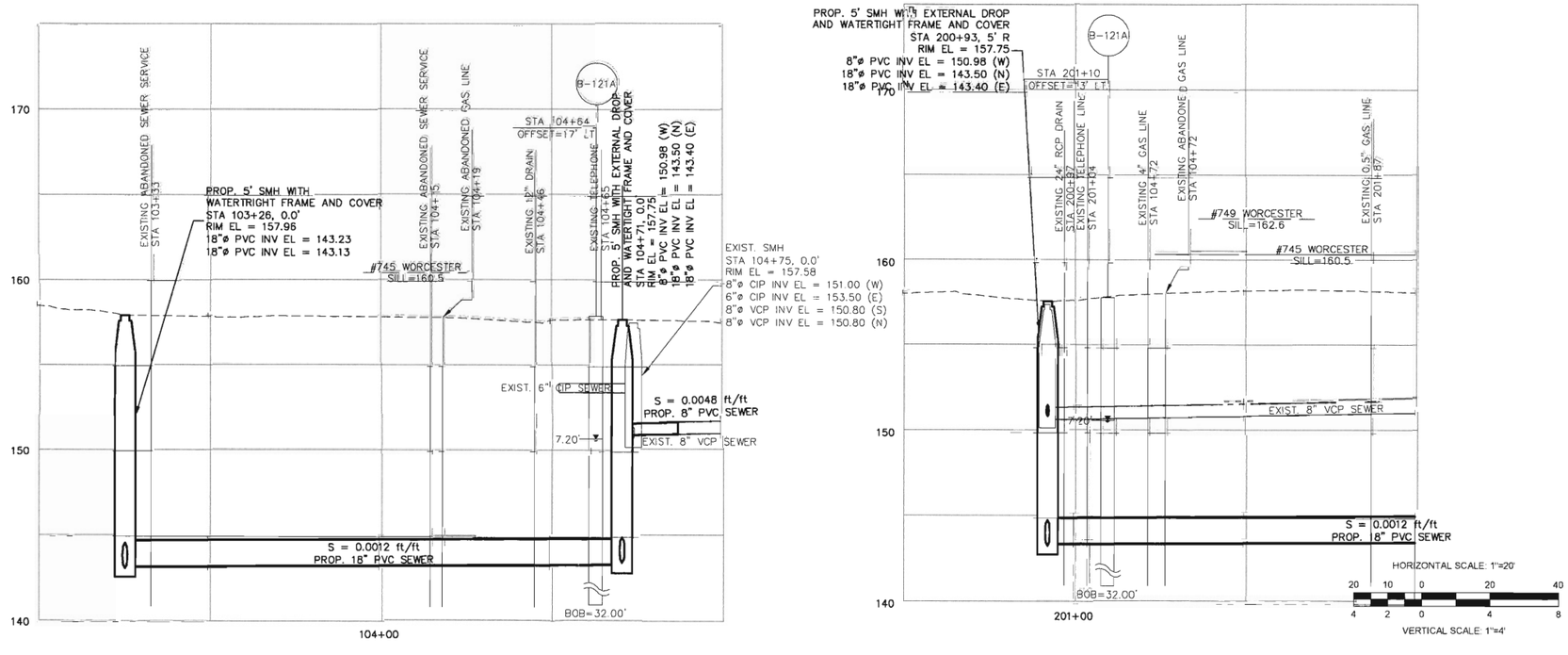

PROFILE

SEA CONSULTANTS INC.
Scientists/Engineers/Architects

Date	Description
4/25/2011	CCD #7
3/16/2011	MASSDOT LETTER 3-16-2011
1/27/2010	CONFORMED

REVISIONS

Scale: AS NOTED
Date: FEBRUARY 2010
Job No.: 2009123.01-A
Designed by: SPG
Drawn by: DRM
Checked by: SPG
Approved by: JJS

Client: TOWN OF FRAMINGHAM DEPARTMENT OF PUBLIC WORKS SEWER DIVISION

Project: CENTRAL STREET SIPHON & SUDBURY RIVER INTERCEPTOR REHABILITATION

Drawing: WORCESTER ROAD PLAN AND PROFILE STA 103+50 TO STA 104+75
BEULAH STREET PLAN AND PROFILE STA 200+00 TO STA 202+00

Sheet C-2

PLOT DATE=5/2/2011 10:59:16 AM USER=DANIEL MCCORMACK FILENAME=G:_clients\Framingham MA\2009123.02-A - SRI CA Services\Civil\CCD7_09123-BEULAH-WORCESTER-PLAN AND PROFILE.dwg

PHOENIX
Environmental Laboratories, Inc.

Tuesday, August 31, 2010

Attn: Mr. Scott Ollerhead
GZA GeoEnvironmental Inc
One Edgewater Drive
Norwood, MA 02062

Project ID: CENTRAL ST., SIPHON
Sample ID#s: AZ38071

This laboratory is in compliance with the QA/QC procedures outlined in EPA 600/4-79-019, Handbook for Analytical Quality in Water and Waste Water, March 1979, SW846 QA/QC and NELAC requirements of procedures used.

This report contains results for the parameters tested, under the sampling conditions described on the Chain Of Custody, as received by the laboratory.

A scanned version of the COC form accompanies the analytical report and is an exact duplicate of the original.

If you have any questions concerning this testing, please do not hesitate to contact Phoenix Client Services at ext. 200.

Sincerely yours,

Phyllis Shiller
Laboratory Director

NELAC - #NY11301
CT Lab Registration #PH-0618
MA Lab Registration #MA-CT-007
ME Lab Registration #CT-007
NH Lab Registration #213693-A,B
NJ Lab Registration #CT-003
NY Lab Registration #11301
PA Lab Registration #68-03530
RI Lab Registration #63
VT Lab Registration #VT11301

587 East Middle Turnpike, P.O. Box 370, Manchester, CT 06040
Telephone (860) 645-1102 Fax (860) 645-0823

PHOENIX

Environmental Laboratories, Inc.
587 East Middle Turnpike, P.O.Box 370, Manchester, CT 06045
Tel. (860) 645-1102 Fax (860) 645-0823

ACCREDITED IN ACCORDANCE WITH nelac NY # 11301

Analysis Report

August 31, 2010

FOR: Attn: Mr. Scott Ollerhead
GZA GeoEnvironmental Inc
One Edgewater Drive
Norwood, MA 02062

Sample Information		Custody Information		Date	Time
Matrix:	GROUND WATER	Collected by:		08/25/10	10:30
Location Code:	GZA-MA	Received by:	LB	08/25/10	17:00
Rush Request:	RUSH##	Analyzed by:	see "By" below		
P.O.#:					

Laboratory Data

SDG ID: GAZ38071
Phoenix ID: AZ38071

Project ID: CENTRAL ST., SIPHON

Client ID: BEULAH ST. RGP-1

Parameter	Result	RL	Units	Date	Time	By	Reference
Silver	< 0.001	0.001	mg/L	08/27/10		EK	6010/200.7
Arsenic	< 0.004	0.004	mg/L	08/27/10		EK	6010/200.7
Cadmium	< 0.001	0.001	mg/L	08/27/10		EK	6010/200.7
Chromium	< 0.001	0.001	mg/L	08/27/10		EK	6010/200.7
Copper	0.004	0.001	mg/L	08/27/10		EK	6010/200.7
Iron	0.360	0.002	mg/L	08/27/10		EK	6010/200.7
Mercury	< 0.0002	0.0002	mg/L	08/26/10		TH	7470/E245.1
Nickel	< 0.001	0.001	mg/L	08/27/10		EK	6010/200.7
Lead	< 0.002	0.002	mg/L	08/27/10		EK	6010/200.7
Antimony	< 0.005	0.005	mg/L	08/27/10		EK	6010/200.7
Selenium	< 0.010	0.010	mg/L	08/27/10		EK	6010/200.7
Trivalent Chromium	< 0.01	0.01	mg/L	08/30/10		EG	Calculation
Zinc	0.003	0.002	mg/L	08/27/10		EK	6010/200.7
Chlorine Residual	< 0.02	0.02	mg/L	08/25/10	22:00	JR/EG	4500Cl-G
Chromium, Hexavalent	< 0.01	0.01	mg/L	08/25/10	21:56	JR/EG	S3500CRD
Total Cyanide	< 0.01	0.01	mg/L	08/27/10		G/E	335.4/9010
O&G, Non-polar Material	< 1.4	1.4	mg/L	08/26/10		MF	Mod. E1664A
Total Suspended Solids	31	5.0	mg/L	08/26/10		KDB	SM2540D
Mercury Digestion	Completed			08/26/10		X	7471/245.1
PCB Extraction (2 Liter)	Completed			08/26/10		O/O	3520MOD
Semi-Volatile Extraction	Completed			08/25/10		O/E	SW3510/3520
Total Metals Digestion	Completed			08/25/10		AG	
Ethylene Dibromide	< 0.02	0.02	ug/L	08/26/10		JRB	504.1
Polychlorinated Biphenyls							
PCB-1016	ND	0.065	ug/L	08/27/10		MH	SW8082/E608
PCB-1221	ND	0.065	ug/L	08/27/10		MH	SW8082/E608
PCB-1232	ND	0.065	ug/L	08/27/10		MH	SW8082/E608

Project ID: CENTRAL ST., SIPHON
Client ID: BEULAH ST. RGP-1

Phoenix I.D.: AZ38071

Parameter	Result	RL	Units	Date	Time	By	Reference
PCB-1242	ND	0.065	ug/L	08/27/10		MH	SW8082/E608
PCB-1248	ND	0.065	ug/L	08/27/10		MH	SW8082/E608
PCB-1254	ND	0.065	ug/L	08/27/10		MH	SW8082/E608
PCB-1260	ND	0.065	ug/L	08/27/10		MH	SW8082/E608
QA/QC Surrogates							
%DCBP (Surrogate Rec)	94		%	08/27/10		MH	SW8082/E608
%TCMX (Surrogate Rec)	79		%	08/27/10		MH	SW8082/E608
Tert-amyl-methyl-ether	< 5.0	5.0	ug/L	08/25/10		R/L	SW8260
Tert-butyl alcohol	< 50	50	ug/L	08/25/10		R/L	SW8260
Volatiles							
	ND	1.0	ug/L	08/25/10		H/L	SW8260
1,1,1,2-Tetrachloroethane	ND	1.0	ug/L	08/25/10		H/L	SW8260
1,1,1-Trichloroethane	ND	1.0	ug/L	08/25/10		H/L	SW8260
1,1,2,2-Tetrachloroethane	ND	0.50	ug/L	08/25/10		H/L	SW8260
1,1,2-Trichloroethane	ND	1.0	ug/L	08/25/10		H/L	SW8260
1,1-Dichloroethane	ND	1.0	ug/L	08/25/10		H/L	SW8260
1,1-Dichloroethene	ND	1.0	ug/L	08/25/10		H/L	SW8260
1,1-Dichloropropene	ND	1.0	ug/L	08/25/10		H/L	SW8260
1,2,3-Trichlorobenzene	ND	1.0	ug/L	08/25/10		H/L	SW8260
1,2,3-Trichloropropane	ND	1.0	ug/L	08/25/10		H/L	SW8260
1,2,4-Trichlorobenzene	ND	1.0	ug/L	08/25/10		H/L	SW8260
1,2,4-Trimethylbenzene	ND	1.0	ug/L	08/25/10		H/L	SW8260
1,2-Dibromo-3-chloropropane	ND	1.0	ug/L	08/25/10		H/L	SW8260
1,2-Dichlorobenzene	ND	1.0	ug/L	08/25/10		H/L	SW8260
1,2-Dichloroethane	ND	1.0	ug/L	08/25/10		H/L	SW8260
1,2-Dichloropropane	ND	1.0	ug/L	08/25/10		H/L	SW8260
1,3,5-Trimethylbenzene	ND	1.0	ug/L	08/25/10		H/L	SW8260
1,3-Dichlorobenzene	ND	1.0	ug/L	08/25/10		H/L	SW8260
1,3-Dichloropropane	ND	1.0	ug/L	08/25/10		H/L	SW8260
1,4-Dichlorobenzene	ND	1.0	ug/L	08/25/10		H/L	SW8260
2,2-Dichloropropane	ND	1.0	ug/L	08/25/10		H/L	SW8260
2-Chlorotoluene	ND	1.0	ug/L	08/25/10		H/L	SW8260
2-Hexanone	ND	5.0	ug/L	08/25/10		H/L	SW8260
2-Isopropyltoluene	ND	1.0	ug/L	08/25/10		H/L	SW8260
4-Chlorotoluene	ND	1.0	ug/L	08/25/10		H/L	SW8260
4-Methyl-2-pentanone	ND	5.0	ug/L	08/25/10		H/L	SW8260
Acetone	ND	25	ug/L	08/25/10		H/L	SW8260
Acrylonitrile	ND	5.0	ug/L	08/25/10		H/L	SW8260
Benzene	ND	1.0	ug/L	08/25/10		H/L	SW8260
Bromobenzene	ND	1.0	ug/L	08/25/10		H/L	SW8260
Bromochloromethane	ND	1.0	ug/L	08/25/10		H/L	SW8260
Bromodichloromethane	ND	0.50	ug/L	08/25/10		H/L	SW8260
Bromoform	ND	1.0	ug/L	08/25/10		H/L	SW8260
Bromomethane	ND	1.0	ug/L	08/25/10		H/L	SW8260
Carbon Disulfide	ND	5.0	ug/L	08/25/10		H/L	SW8260
Carbon tetrachloride	ND	1.0	ug/L	08/25/10		H/L	SW8260
Chlorobenzene	ND	1.0	ug/L	08/25/10		H/L	SW8260
Chloroethane	ND	1.0	ug/L	08/25/10		H/L	SW8260
Chloroform	ND	1.0	ug/L	08/25/10		H/L	SW8260

Project ID: CENTRAL ST., SIPHON
Client ID: BEULAH ST. RGP-1

Phoenix I.D.: AZ38071

Parameter	Result	RL	Units	Date	Time	By	Reference
Chloromethane	ND	1.0	ug/L	08/25/10		H/L	SW8260
cis-1,2-Dichloroethene	ND	1.0	ug/L	08/25/10		H/L	SW8260
cis-1,3-Dichloropropene	ND	0.50	ug/L	08/25/10		H/L	SW8260
Dibromochloromethane	ND	0.50	ug/L	08/25/10		H/L	SW8260
Dibromomethane	ND	1.0	ug/L	08/25/10		H/L	SW8260
Dichlorodifluoromethane	ND	1.0	ug/L	08/25/10		H/L	SW8260
Ethylbenzene	ND	1.0	ug/L	08/25/10		H/L	SW8260
Hexachlorobutadiene	ND	0.40	ug/L	08/25/10		H/L	SW8260
Isopropylbenzene	ND	1.0	ug/L	08/25/10		H/L	SW8260
m&p-Xylene	ND	1.0	ug/L	08/25/10		H/L	SW8260
Methyl ethyl ketone	ND	5.0	ug/L	08/25/10		H/L	SW8260
Methyl t-butyl ether (MTBE)	ND	1.0	ug/L	08/25/10		H/L	SW8260
Methylene chloride	ND	1.0	ug/L	08/25/10		H/L	SW8260
Naphthalene	ND	1.0	ug/L	08/25/10		H/L	SW8260
n-Butylbenzene	ND	1.0	ug/L	08/25/10		H/L	SW8260
n-Propylbenzene	ND	1.0	ug/L	08/25/10		H/L	SW8260
o-Xylene	ND	1.0	ug/L	08/25/10		H/L	SW8260
p-Isopropyltoluene	ND	1.0	ug/L	08/25/10		H/L	SW8260
sec-Butylbenzene	ND	1.0	ug/L	08/25/10		H/L	SW8260
Styrene	ND	1.0	ug/L	08/25/10		H/L	SW8260
tert-Butylbenzene	ND	1.0	ug/L	08/25/10		H/L	SW8260
Tetrachloroethene	ND	1.0	ug/L	08/25/10		H/L	SW8260
Tetrahydrofuran (THF)	ND	5.0	ug/L	08/25/10		H/L	SW8260
Toluene	ND	1.0	ug/L	08/25/10		H/L	SW8260
Total Xylenes	ND	1.0	ug/L	08/25/10		H/L	SW8260
trans-1,2-Dichloroethene	ND	1.0	ug/L	08/25/10		H/L	SW8260
trans-1,3-Dichloropropene	ND	0.50	ug/L	08/25/10		H/L	SW8260
trans-1,4-dichloro-2-butene	ND	5.0	ug/L	08/25/10		H/L	SW8260
Trichloroethene	ND	1.0	ug/L	08/25/10		H/L	SW8260
Trichlorofluoromethane	ND	1.0	ug/L	08/25/10		H/L	SW8260
Trichlorotrifluoroethane	ND	1.0	ug/L	08/25/10		H/L	SW8260
Vinyl chloride	ND	1.0	ug/L	08/25/10		H/L	SW8260
QA/QC Surrogates							
% 1,2-dichlorobenzene-d4	111		%	08/25/10		H/L	SW8260
% Bromofluorobenzene	89		%	08/25/10		H/L	SW8260
% Dibromofluoromethane	89		%	08/25/10		H/L	SW8260
% Toluene-d8	96		%	08/25/10		H/L	SW8260
Semivolatiles							
1,2,4-Trichlorobenzene	ND	5.0	ug/L	08/26/10		KCA	SW 8270
1,2-Dichlorobenzene	ND	5.0	ug/L	08/26/10		KCA	SW 8270
1,3-Dichlorobenzene	ND	5.0	ug/L	08/26/10		KCA	SW 8270
1,4-Dichlorobenzene	ND	5.0	ug/L	08/26/10		KCA	SW 8270
2,4,5-Trichlorophenol	ND	10	ug/L	08/26/10		KCA	SW 8270
2,4,6-Trichlorophenol	ND	10	ug/L	08/26/10		KCA	SW 8270
2,4-Dichlorophenol	ND	10	ug/L	08/26/10		KCA	SW 8270
2,4-Dimethylphenol	ND	10	ug/L	08/26/10		KCA	SW 8270
2,4-Dinitrophenol	ND	50	ug/L	08/26/10		KCA	SW 8270
2,4-Dinitrotoluene	ND	5.0	ug/L	08/26/10		KCA	SW 8270
2,6-Dinitrotoluene	ND	5.0	ug/L	08/26/10		KCA	SW 8270

Project ID: CENTRAL ST., SIPHON
Client ID: BEULAH ST. RGP-1

Phoenix I.D.: AZ38071

Parameter	Result	RL	Units	Date	Time	By	Reference
2-Chloronaphthalene	ND	5.0	ug/L	08/26/10		KCA	SW 8270
2-Chlorophenol	ND	10	ug/L	08/26/10		KCA	SW 8270
2-Methylnaphthalene	ND	5.0	ug/L	08/26/10		KCA	SW 8270
2-Methylphenol (o-cresol)	ND	10	ug/L	08/26/10		KCA	SW 8270
2-Nitroaniline	ND	50	ug/L	08/26/10		KCA	SW 8270
2-Nitrophenol	ND	10	ug/L	08/26/10		KCA	SW 8270
3&4-Methylphenol (m&p-cresol)	ND	10	ug/L	08/26/10		KCA	SW 8270
3,3'-Dichlorobenzidine	ND	50	ug/L	08/26/10		KCA	SW 8270
3-Nitroaniline	ND	50	ug/L	08/26/10		KCA	SW 8270
4,6-Dinitro-2-methylphenol	ND	50	ug/L	08/26/10		KCA	SW 8270
4-Bromophenyl phenyl ether	ND	5.0	ug/L	08/26/10		KCA	SW 8270
4-Chloro-3-methylphenol	ND	20	ug/L	08/26/10		KCA	SW 8270
4-Chloroaniline	ND	20	ug/L	08/26/10		KCA	SW 8270
4-Chlorophenyl phenyl ether	ND	5.0	ug/L	08/26/10		KCA	SW 8270
4-Nitroaniline	ND	20	ug/L	08/26/10		KCA	SW 8270
4-Nitrophenol	ND	50	ug/L	08/26/10		KCA	SW 8270
Acetophenone	ND	5.0	ug/L	08/26/10		KCA	SW 8270
Aniline	ND	10	ug/L	08/26/10		KCA	SW 8270
Anthracene	ND	5.0	ug/L	08/26/10		KCA	SW 8270
Azobenzene	ND	5.0	ug/L	08/26/10		KCA	SW 8270
Benzidine	ND	50	ug/L	08/26/10		KCA	SW 8270
Benzoic acid	ND	50	ug/L	08/26/10		KCA	SW 8270
Benzyl butyl phthalate	ND	5.0	ug/L	08/26/10		KCA	SW 8270
Bis(2-chloroethoxy)methane	ND	5.0	ug/L	08/26/10		KCA	SW 8270
Bis(2-chloroethyl)ether	ND	5.0	ug/L	08/26/10		KCA	SW 8270
Bis(2-chloroisopropyl)ether	ND	5.0	ug/L	08/26/10		KCA	SW 8270
Carbazole	ND	5.0	ug/L	08/26/10		KCA	SW 8270
Dibenzofuran	ND	5.0	ug/L	08/26/10		KCA	SW 8270
Diethyl phthalate	ND	5.0	ug/L	08/26/10		KCA	SW 8270
Dimethylphthalate	ND	5.0	ug/L	08/26/10		KCA	SW 8270
Di-n-butylphthalate	ND	5.0	ug/L	08/26/10		KCA	SW 8270
Di-n-octylphthalate	ND	5.0	ug/L	08/26/10		KCA	SW 8270
Fluoranthene	ND	5.0	ug/L	08/26/10		KCA	SW 8270
Fluorene	ND	5.0	ug/L	08/26/10		KCA	SW 8270
Hexachlorobutadiene	ND	5.0	ug/L	08/26/10		KCA	SW 8270
Hexachlorocyclopentadiene	ND	5.0	ug/L	08/26/10		KCA	SW 8270
Isophorone	ND	5.0	ug/L	08/26/10		KCA	SW 8270
Naphthalene	ND	5.0	ug/L	08/26/10		KCA	SW 8270
Nitrobenzene	ND	5.0	ug/L	08/26/10		KCA	SW 8270
N-Nitrosodimethylamine	ND	5.0	ug/L	08/26/10		KCA	SW 8270
N-Nitrosodi-n-propylamine	ND	5.0	ug/L	08/26/10		KCA	SW 8270
N-Nitrosodiphenylamine	ND	5.0	ug/L	08/26/10		KCA	SW 8270
Phenol	ND	10	ug/L	08/26/10		KCA	SW 8270
Pyrene	ND	5.0	ug/L	08/26/10		KCA	SW 8270
Pyridine	ND	5.0	ug/L	08/26/10		KCA	SW 8270
QA/QC Surrogates							
% 2,4,6-Tribromophenol	91		%	08/26/10		KCA	SW 8270
% 2-Fluorobiphenyl	71		%	08/26/10		KCA	SW 8270
% 2-Fluorophenol	63		%	08/26/10		KCA	SW 8270
% Nitrobenzene-d5	68		%	08/26/10		KCA	SW 8270

Project ID: CENTRAL ST., SIPHON
Client ID: BEULAH ST. RGP-1

Phoenix I.D.: AZ38071

Parameter	Result	RL	Units	Date	Time	By	Reference	
% Phenol-d5	57		%	08/26/10		KCA	SW 8270	
% Terphenyl-d14	69		%	08/26/10		KCA	SW 8270	
Semivolatiles								
1,2,4,5-Tetrachlorobenzene	ND	1.6	ug/L	08/26/10		KCA	SW8270 (SIM)	
Acenaphthene	ND	0.050	ug/L	08/26/10		KCA	SW8270 (SIM)	
Acenaphthylene	0.085	0.050	ug/L	08/26/10		KCA	SW8270 (SIM)	
Benz(a)anthracene	0.17	0.040	ug/L	08/26/10		KCA	SW8270 (SIM)	
Benzo(a)pyrene	0.2	0.050	ug/L	08/26/10		KCA	SW8270 (SIM)	
Benzo(b)fluoranthene	0.28	0.050	ug/L	08/26/10		KCA	SW8270 (SIM)	
Benzo(ghi)perylene	ND	3.0	ug/L	08/26/10		KCA	SW8270 (SIM)	
Benzo(k)fluoranthene	0.13	0.050	ug/L	08/26/10		KCA	SW8270 (SIM)	
Bis(2-ethylhexyl)phthalate	ND	1.6	ug/L	08/26/10		KCA	SW8270 (SIM)	
Chrysene	0.17	0.050	ug/L	08/26/10		KCA	SW8270 (SIM)	
Dibenz(a,h)anthracene	0.08	0.050	ug/L	08/26/10		KCA	SW8270 (SIM)	
Hexachlorobenzene	ND	0.060	ug/L	08/26/10		KCA	SW8270 (SIM)	
Hexachloroethane	ND	2.4	ug/L	08/26/10		KCA	SW8270 (SIM)	
Indeno(1,2,3-cd)pyrene	0.21	0.050	ug/L	08/26/10		KCA	SW8270 (SIM)	
Pentachloronitrobenzene	ND	0.10	ug/L	08/26/10		KCA	SW8270 (SIM)	
Pentachlorophenol	ND	0.80	ug/L	08/26/10		KCA	SW8270 (SIM)	
Phenanthrene	0.087	0.050	ug/L	08/26/10		KCA	SW8270 (SIM)	
QA/QC Surrogates								
% 2,4,6-Tribromophenol	91		%	08/26/10		KCA	SW8270 (SIM)	
% 2-Fluorobiphenyl	71		%	08/26/10		KCA	SW8270 (SIM)	
% 2-Fluorophenol	63		%	08/26/10		KCA	SW8270 (SIM)	
% Nitrobenzene-d5	68		%	08/26/10		KCA	SW8270 (SIM)	
% Phenol-d5	57		%	08/26/10		KCA	SW8270 (SIM)	
% Terphenyl-d14	69		%	08/26/10		KCA	SW8270 (SIM)	
1,4-dioxane								
1,4-dioxane	ND	1.0	ug/l	08/25/10		R/L	SW8260SIM	7
QA/QC Surrogates								
% 1,2-dichlorobenzene-d4	97		%	08/25/10		R/L	SW8260SIM	7
% Bromofluorobenzene	91		%	08/25/10		R/L	SW8260SIM	7
% Toluene-d8	95		%	08/25/10		R/L	SW8260SIM	7

7 = This parameter is not certified by MA for this matrix.

Comments:

If there are any questions regarding this data, please call Phoenix Client Services at extension 200.

ND=Not detected BDL=Below Detection Level RL=Reporting Level

This report must not be reproduced except in full as defined by the attached chain of custody.

Phyllis Shiller, Laboratory Director
September 01, 2010

Environmental Laboratories, Inc.
587 East Middle Turnpike, P.O.Box 370, Manchester, CT 06045
Tel. (860) 645-1102 Fax (860) 645-0823

ACCREDITED IN ACCORDANCE WITH nelac NY # 11301

QA/QC Report

September 01, 2010

QA/QC Data

SDG I.D.: GAZ38071

Parameter	Blank	Dup RPD	LCS %	LCSD %	LCS RPD	MS Rec %	MS Dup Rec %	RPD
QA/QC Batch 160135, QC Sample No: AZ37470 (AZ38071)								
Mercury	BDL		97.2	97.2	0.0	102	78.8	25.7
QA/QC Batch 160115, QC Sample No: AZ37715 (AZ38071)								
ICP Metals - Aqueous								
Antimony	BDL	NC	101	99.8	1.2	97.0	100	3.0
Arsenic	BDL	NC	97.1	96.4	0.7	93.5	96.4	3.1
Cadmium	BDL	NC	100	99.5	0.5	97.6	99.1	1.5
Chromium	BDL	NC	99.9	99.4	0.5	96.5	98.9	2.5
Copper	0.002	NC	99.2	98.7	0.5	96.3	98.4	2.2
Iron	BDL	5.10	98.7	98.3	0.4	95.1	97.6	2.6
Lead	BDL	NC	101	100	1.0	97.8	99.5	1.7
Nickel	BDL	NC	101	100	1.0	98.3	99.2	0.9
Selenium	BDL	NC	90.7	90.0	0.8	87.1	89.9	3.2
Silver	BDL	NC	97.0	96.6	0.4	94.3	96.2	2.0
Zinc	BDL	1.30	98.1	97.4	0.7	95.0	97.4	2.5

Environmental Laboratories, Inc.
587 East Middle Turnpike, P.O.Box 370, Manchester, CT 06045
Tel. (860) 645-1102 Fax (860) 645-0823

NY # 11301

QA/QC Report

September 01, 2010

QA/QC Data

SDG I.D.: GAZ38071

Parameter	Blank	Dup RPD	LCS %	LCSD %	LCS RPD	MS Rec %	MS Dup Rec %	RPD
QA/QC Batch 160166, QC Sample No: AZ36963 (AZ38071)								
Oil and Grease by EPA 1664	BDL		99.0					
QA/QC Batch 160134, QC Sample No: AZ37330 (AZ38071)								
Total Suspended Solids	BDL	NC	101					
QA/QC Batch 160170, QC Sample No: AZ37705 (AZ38071)								
Chlorine Residual	BDL	NC	94.0					
QA/QC Batch 160266, QC Sample No: AZ37913 (AZ38071)								
Total Cyanide	BDL	NC	104			109		
QA/QC Batch 160149, QC Sample No: AZ38071 (AZ38071)								
Chromium, Hexavalent	BDL	NC	102			106		

PHOENIX

Environmental Laboratories, Inc.
587 East Middle Turnpike, P.O.Box 370, Manchester, CT 06045
Tel. (860) 645-1102 Fax (860) 645-0823

ACCREDITED IN ACCORDANCE WITH nelac NY # 11301

QA/QC Report

September 01, 2010

QA/QC Data

SDG I.D.: GAZ38071

Parameter	Blank	LCS %	LCSD %	LCS RPD	MS Rec %	MS Dup Rec %	RPD	
QA/QC Batch 160272, QC Sample No: AZ33964 (AZ38071)								
EDB and DBCP Analysis								
1,2-Dibromo-3-Chloropropane	ND	105	150	35.3				
1,2-Dibromoethane (EDB)	ND	98	95	3.1				
QA/QC Batch 160361, QC Sample No: AZ37384 (AZ38071)								
Volatiles								
1,1,1,2-Tetrachloroethane	ND	92	100	8.3	98	97	1.0	
1,1,1-Trichloroethane	ND	90	99	9.5	110	109	0.9	
1,1,2,2-Tetrachloroethane	ND	95	99	4.1	88	93	5.5	
1,1,2-Trichloroethane	ND	93	100	7.3	95	95	0.0	
1,1-Dichloroethane	ND	86	94	8.9	100	102	2.0	
1,1-Dichloroethene	ND	70	80	13.3	97	101	4.0	
1,1-Dichloropropene	ND	80	92	14.0	102	101	1.0	
1,2,3-Trichlorobenzene	ND	130	138	6.0	62	144	79.6	3
1,2,3-Trichloropropane	ND	96	101	5.1	91	92	1.1	
1,2,4-Trichlorobenzene	ND	98	103	5.0	68	111	48.0	3
1,2,4-Trimethylbenzene	ND	94	102	8.2	92	93	1.1	
1,2-Dibromo-3-chloropropane	ND	90	95	5.4	82	97	16.8	
1,2-Dichlorobenzene	ND	92	99	7.3	86	92	6.7	
1,2-Dichloroethane	ND	103	108	4.7	111	108	2.7	
1,2-Dichloropropane	ND	86	114	28.0	91	89	2.2	
1,3,5-Trimethylbenzene	ND	91	101	10.4	92	91	1.1	
1,3-Dichlorobenzene	ND	90	96	6.5	87	89	2.3	
1,3-Dichloropropane	ND	94	101	7.2	89	93	4.4	
1,4-Dichlorobenzene	ND	88	95	7.7	88	89	1.1	
2,2-Dichloropropane	ND	82	88	7.1	86	82	4.8	
2-Chlorotoluene	ND	89	96	7.6	88	90	2.2	
2-Hexanone	ND	94	97	3.1	84	91	8.0	
2-Isopropyltoluene	ND	88	97	9.7	84	84	0.0	
4-Chlorotoluene	ND	88	93	5.5	88	90	2.2	
4-Methyl-2-pentanone	ND	95	103	8.1	95	96	1.0	
Acetone	ND	97	99	2.0	107	96	10.8	
Acrylonitrile	ND	95	107	11.9	92	106	14.1	
Benzene	ND	81	90	10.5	95	93	2.1	
Bromobenzene	ND	91	97	6.4	89	91	2.2	
Bromochloromethane	ND	93	101	8.2	97	102	5.0	
Bromodichloromethane	ND	93	111	17.6	99	98	1.0	
Bromoform	ND	97	103	6.0	95	95	0.0	
Bromomethane	ND	101	116	13.8	90	107	17.3	
Carbon Disulfide	ND	83	93	11.4	90	99	9.5	
Carbon tetrachloride	ND	84	94	11.2	114	106	7.3	
Chlorobenzene	ND	87	94	7.7	90	91	1.1	

QA/QC Data

SDG I.D.: GAZ38071

Parameter	Blank	LCS %	LCSD %	LCS RPD	MS Rec %	MS Dup Rec %	RPD	
Chloroethane	ND	89	102	13.6	87	95	8.8	
Chloroform	ND	90	96	6.5	102	104	1.9	
Chloromethane	ND	80	89	10.7	95	96	1.0	
cis-1,2-Dichloroethene	ND	86	92	6.7	90	95	5.4	
cis-1,3-Dichloropropene	ND	89	93	4.4	89	74	18.4	
Dibromochloromethane	ND	98	103	5.0	95	95	0.0	
Dibromomethane	ND	95	99	4.1	99	101	2.0	
Dichlorodifluoromethane	ND	108	121	11.4	110	116	5.3	
Ethylbenzene	ND	86	94	8.9	92	92	0.0	
Hexachlorobutadiene	ND	89	94	5.5	66	88	28.6	3
Isopropylbenzene	ND	81	91	11.6	91	92	1.1	
m&p-Xylene	ND	88	96	8.7	94	93	1.1	
Methyl ethyl ketone	ND	86	89	3.4	96	95	1.0	
Methyl t-butyl ether (MTBE)	ND	103	105	1.9	118	110	7.0	
Methylene chloride	ND	83	90	8.1	90	93	3.3	
Naphthalene	ND	109	111	1.8	65	141	73.8	
n-Butylbenzene	ND	88	97	9.7	80	84	4.9	
n-Propylbenzene	ND	89	99	10.6	89	89	0.0	
o-Xylene	ND	92	100	8.3	94	93	1.1	
p-Isopropyltoluene	ND	92	101	9.3	86	86	0.0	
sec-Butylbenzene	ND	88	97	9.7	85	87	2.3	
Styrene	ND	94	101	7.2	95	94	1.1	
tert-Butylbenzene	ND	89	99	10.6	89	90	1.1	
Tetrachloroethene	ND	81	89	9.4	59	59	0.0	3
Tetrahydrofuran (THF)	ND	96	98	2.1	86	99	14.1	
Toluene	ND	83	90	8.1	93	90	3.3	
trans-1,2-Dichloroethene	ND	78	87	10.9	99	104	4.9	
trans-1,3-Dichloropropene	ND	96	103	7.0	96	93	3.2	
trans-1,4-dichloro-2-butene	ND	99	100	1.0	80	84	4.9	
Trichloroethene	ND	81	88	8.3	83	82	1.2	
Trichlorofluoromethane	ND	90	103	13.5	117	116	0.9	
Trichlorotrifluoroethane	ND	78	90	14.3	98	99	1.0	
Vinyl chloride	ND	84	95	12.3	104	109	4.7	
% 1,2-dichlorobenzene-d4	109	101	101	0.0	100	104	3.9	
% Bromofluorobenzene	88	103	103	0.0	102	104	1.9	
% Dibromofluoromethane	101	108	100	7.7	109	109	0.0	
% Toluene-d8	97	98	97	1.0	99	96	3.1	

QA/QC Batch 160214, QC Sample No: AZ37874 (AZ38071)

Polychlorinated Biphenyls

PCB-1016	ND	103	99	4.0
PCB-1221	ND			
PCB-1232	ND			
PCB-1242	ND			
PCB-1248	ND			
PCB-1254	ND			
PCB-1260	ND	104	98	5.9
PCB-1262	ND			
PCB-1268	ND			
% DCBP (Surrogate Rec)	119	121	120	0.8
% TCMX (Surrogate Rec)	77	80	74	7.8

Comment:

A LCS and LCS Duplicate were performed instead of a matrix spike and matrix spike duplicate.

QA/QC Data

SDG I.D.: GAZ38071

Parameter	Blank	LCS %	LCSD %	LCS RPD	MS Rec %	MS Dup Rec %	RPD
QA/QC Batch 160162, QC Sample No: AZ38071 (AZ38071)							
1,4-dioxane							
1,4-dioxane	ND	108	122	12.2		122	
% 1,2-dichlorobenzene-d4	96	99	99	0.0		98	
% Bromofluorobenzene	89	90	90	0.0		90	
% Toluene-d8	95	92	92	0.0		96	
QA/QC Batch 160109, QC Sample No: AZ38148 (AZ38071)							
Semivolatiles							
1,2,4,5-Tetrachlorobenzene	ND	78	77	1.3			
1,2,4-Trichlorobenzene	ND	74	73	1.4			
1,2-Dichlorobenzene	ND	79	75	5.2			
1,3-Dichlorobenzene	ND	75	73	2.7			
1,4-Dichlorobenzene	ND	78	74	5.3			
2,4,5-Trichlorophenol	ND	86	87	1.2			
2,4,6-Trichlorophenol	ND	87	89	2.3			
2,4-Dichlorophenol	ND	87	83	4.7			
2,4-Dimethylphenol	ND	36	36	0.0			
2,4-Dinitrophenol	ND	123	32	117.4			2
2,4-Dinitrotoluene	ND	90	86	4.5			
2,6-Dinitrotoluene	ND	86	82	4.8			
2-Chloronaphthalene	ND	82	79	3.7			
2-Chlorophenol	ND	75	73	2.7			
2-Methylnaphthalene	ND	79	76	3.9			
2-Methylphenol (o-cresol)	ND	77	70	9.5			
2-Nitroaniline	ND	106	126	17.2			
2-Nitrophenol	ND	70	77	9.5			
3&4-Methylphenol (m&p-cresol)	ND	80	75	6.5			
3,3'-Dichlorobenzidine	ND	N/A	N/A	NC			
3-Nitroaniline	ND	115	121	5.1			
4,6-Dinitro-2-methylphenol	ND	118	60	65.2			
4-Bromophenyl phenyl ether	ND	83	84	1.2			
4-Chloro-3-methylphenol	ND	89	81	9.4			
4-Chloroaniline	ND	39	38	2.6			
4-Chlorophenyl phenyl ether	ND	89	87	2.3			
4-Nitroaniline	ND	91	81	11.6			
4-Nitrophenol	ND	99	88	11.8			
Acenaphthene	ND	87	83	4.7			
Acenaphthylene	ND	82	78	5.0			
Acetophenone	ND	80	76	5.1			
Aniline	ND	N/A	N/A	NC			
Anthracene	ND	95	88	7.7			
Azobenzene	ND	94	83	12.4			
Benz(a)anthracene	ND	89	88	1.1			
Benzidine	ND	N/A	N/A	NC			
Benzo(a)pyrene	ND	80	80	0.0			
Benzo(b)fluoranthene	ND	82	85	3.6			
Benzo(ghi)perylene	ND	93	90	3.3			
Benzo(k)fluoranthene	ND	87	84	3.5			
Benzoic acid	ND	N/A	N/A	NC			
Benzyl butyl phthalate	ND	92	100	8.3			
Bis(2-chloroethoxy)methane	ND	87	78	10.9			

QA/QC Data

SDG I.D.: GAZ38071

Parameter	Blank	LCS %	LCSD %	LCS RPD	MS Rec %	MS Dup Rec %	RPD	
Bis(2-chloroethyl)ether	ND	82	73	11.6				
Bis(2-chloroisopropyl)ether	ND	88	69	24.2				
Bis(2-ethylhexyl)phthalate	ND	104	109	4.7				
Carbazole	ND	97	88	9.7				
Chrysene	ND	95	87	8.8				
Dibenz(a,h)anthracene	ND	92	90	2.2				
Dibenzofuran	ND	84	80	4.9				
Diethyl phthalate	ND	95	92	3.2				
Dimethylphthalate	ND	93	89	4.4				
Di-n-butylphthalate	ND	99	102	3.0				
Di-n-octylphthalate	ND	99	104	4.9				
Fluoranthene	ND	80	89	10.7				
Fluorene	ND	93	88	5.5				
Hexachlorobenzene	ND	82	89	8.2				
Hexachlorobutadiene	ND	71	74	4.1				
Hexachlorocyclopentadiene	ND	<5	<5	NC				2
Hexachloroethane	ND	74	75	1.3				
Indeno(1,2,3-cd)pyrene	ND	90	89	1.1				
Isophorone	ND	84	77	8.7				
Naphthalene	ND	80	77	3.8				
Nitrobenzene	ND	78	72	8.0				
N-Nitrosodimethylamine	ND	47	67	35.1				
N-Nitrosodi-n-propylamine	ND	82	75	8.9				
N-Nitrosodiphenylamine	ND	97	92	5.3				
Pentachloronitrobenzene	ND	79	90	13.0				
Pentachlorophenol	ND	26	62	81.8				2
Phenanthrene	ND	84	82	2.4				
Phenol	ND	79	70	12.1				
Pyrene	ND	76	84	10.0				
Pyridine	ND	<5	<5	NC				2
% 2,4,6-Tribromophenol	85	88	92	4.4				
% 2-Fluorobiphenyl	69	75	71	5.5				
% 2-Fluorophenol	67	67	62	7.8				
% Nitrobenzene-d5	68	72	68	5.7				
% Phenol-d5	67	69	63	9.1				
% Terphenyl-d14	66	60	65	8.0				

Comment:

A LCS and LCS Duplicate were performed instead of a matrix spike and matrix spike duplicate.

2 = This parameter is outside laboratory lcs/lcsd specified limits.
3 = This parameter is outside laboratory ms/msd specified limits.

If there are any questions regarding this data, please call Phoenix Client Services at extension 200.

RPD - Relative Percent Difference
LCS - Laboratory Control Sample
LCSD - Laboratory Control Sample Duplicate
MS - Matrix Spike
MS Dup - Matrix Spike Duplicate
NC - No Criteria

Phyllis Shiller, Laboratory Director
September 01, 2010

Sample Criteria Exceedences Report

Requested Criteria: CAM, GW1

GAZ38071

SampNo	LocCode	Acode	Phoenix Analyte	Criteria Units	ST	State Category	Criteria Name	Result	RL	Factored Criteria	Factored RL Criteria	Analysis Units
AZ38071	GZA-MA	$8260GWR	Acetone	ug/L	MA	Cam Protocol	VOA AQ RL	ND	25		2	ug/L
AZ38071	GZA-MA	$8260GWR	Carbon Disulfide	ug/L	MA	Cam Protocol	VOA AQ RL	ND	5.0		2	ug/L
AZ38071	GZA-MA	$8260GWR	Acrylonitrile	ug/L	MA	Cam Protocol	VOA AQ RL	ND	5.0		2	ug/L
AZ38071	GZA-MA	$8260GWR	Tetrahydrofuran (THF)	ug/L	MA	Cam Protocol	VOA AQ RL	ND	5.0		2	ug/L
AZ38071	GZA-MA	$8260GWR	Methyl ethyl ketone	ug/L	MA	Cam Protocol	VOA AQ RL	ND	5.0		2	ug/L
AZ38071	GZA-MA	$8260GWR	4-Methyl-2-pentanone	ug/L	MA	Cam Protocol	VOA AQ RL	ND	5.0		2	ug/L
AZ38071	GZA-MA	$8260GWR	2-Hexanone	ug/L	MA	Cam Protocol	VOA AQ RL	ND	5.0		2	ug/L
AZ38071	GZA-MA	$8260GWR	trans-1,4-dichloro-2-butene	ug/L	MA	Cam Protocol	VOA AQ RL	ND	5.0		2	ug/L
AZ38071	GZA-MA	$8270-SIMFSR	Benzoic acid	ug/L	MA	Cam Protocol	SVOA AQ RL	ND	50		10	ug/L
AZ38071	GZA-MA	$8270-SIMFSR	4-Chloroaniline	ug/L	MA	Cam Protocol	SVOA AQ RL	ND	20		10	ug/L
AZ38071	GZA-MA	$8270-SIMFSR	4-Chloro-3-methylphenol	ug/L	MA	Cam Protocol	SVOA AQ RL	ND	20		10	ug/L
AZ38071	GZA-MA	$8270-SIMFSR	4-Nitroaniline	ug/L	MA	Cam Protocol	SVOA AQ RL	ND	20		10	ug/L
AZ38071	GZA-MA	$8270-SIMFSR	3-Nitroaniline	ug/L	MA	Cam Protocol	SVOA AQ RL	ND	50		10	ug/L
AZ38071	GZA-MA	$8270-SIMFSR	2,4-Dinitrophenol	ug/L	MA	Cam Protocol	SVOA AQ RL	ND	50		10	ug/L
AZ38071	GZA-MA	$8270-SIMFSR	4-Nitrophenol	ug/L	MA	Cam Protocol	SVOA AQ RL	ND	50		10	ug/L
AZ38071	GZA-MA	$8270-SIMFSR	2-Nitroaniline	ug/L	MA	Cam Protocol	SVOA AQ RL	ND	50		10	ug/L
AZ38071	GZA-MA	$8270-SIMFSR	4,6-Dinitro-2-methylphenol	ug/L	MA	Cam Protocol	SVOA AQ RL	ND	50		10	ug/L
AZ38071	GZA-MA	$8270-SIMFSR	Benzidine	ug/L	MA	Cam Protocol	SVOA AQ RL	ND	50		10	ug/L
AZ38071	GZA-MA	$8270-SIMFSR	3,3'-Dichlorobenzidine	ug/L	MA	Cam Protocol	SVOA AQ RL	ND	50		10	ug/L
AZ38071	GZA-MA	TPHGRAVW	O&G, Non-polar Material	ug/L	MA	Groundwater Standards	GW-1	BDL	1.4	0.2	0.2	mg/L

Phoenix Laboratories does not assume responsibility for the data contained in this report. It is provided as an additional tool to identify requested criteria exceedences. All efforts are made to ensure the accuracy of the data (obtained from appropriate agencies). A lack of exceedence information does not necessarily suggest conformance to the criteria. It is ultimately the site professional's responsibility to determine appropriate compliance.

MassDEP Analytical Protocol Certification Form

Laboratory Name: Phoenix Environmental Laboratories, Inc. **Project #:**

Project Location: CENTRAL ST., SIPHON **RTN:**

This Form provides certifications for the following data set: [list Laboratory Sample ID Number(s)]

AZ38071

Matrices: ☑ Groundwater/Surface Water ☐ Soil/Sediment ☐ Drinking Water ☐ Air ☐ Other:

CAM Protocol (check all that apply below)

8260 VOC CAM II A ☑	7470/7471 Hg CAM III B ☑	MassDEP VPH CAM IV A ☐	8081 Pesticides CAM V B ☐	7196 Hex Cr CAM VI B ☑	MassDEP APH CAM IX A ☐
8270 SVOC CAM II B ☑	7010 Metals CAM III C ☐	MassDEP EPH CAM IV B ☐	8151 Herbicides CAM V C ☐	8330 Explosives CAM VIII A ☐	TO-15 VOC CAM IX B ☐
6010 Metals CAM III A ☑	6020 Metals CAM III D ☐	8082 PCB CAM V A ☑	9014 Total Cyanide/PAC CAM V1 A ☑	6860 Perchlorate CAM VIII B ☐	

Affirmative responses to questions A through F are required for "Presumptive Certainty" status

A	Were all samples received in a condition consistent with those described on the Chain-of-Custody, properly preserved (including temperature*) in the field or laboratory, and prepared/analyzed with method holding times? (* see narrative)	☑ Yes ☐ No
B	Were the analytical method(s) and all associated QC requirements specified in the selected CAM protocol(s) followed?	☑ Yes ☐ No
C	Were all required corrective actions and analytical response actions specified in the selected CAM protocol(s) implemented for all identified performance standard non-conformances?	☑ Yes ☐ No
D	Does the laboratory report comply with all the reporting requirements speified in CAM VII A, "Quality Assurance and Quality Control Guidelines for the Acquisition and Reporting of Analytical Data"?	☑ Yes ☐ No
E	a. VPH, EPH, and APH Methods only: Was each method conducted without significant modification(s)? (refer to the individual method(s) for a list of significant modifications). b. APH and TO-15 methods only: Was the complete analyte list reported for each method?	☐ Yes ☐ No ☐ Yes ☐ No
F	Were all applicable CAM protocol QC and performance standard non-confirmances identified and evaluated in a laboratory narrative (including all "No" responses to Questions A through E)?	☑ Yes ☐ No

Responses to questions G, H and I below is required for "Presumptive Certainty" status

G	Were the reporting limits at or below all CAM reporting limits specified in the selected CAM protocol(s)?	☐ Yes ☑ No

Data User Note: Data that achieve "Presumptive Certainty" status may not necessarily meet the data usability and representativeness requirements described in 310 CMR 40. 1056(2)(k) and WSC-07-350

H	Were all QC performance standards specified in the CAM protocol(s) achieved? See Sections: ICP, SVOA, VOA Narrations .	☐ Yes ☑ No
I	Were results reported for the complete analyte list specified in the selected CAM protocol(s)?	☐ Yes ☑ No

All negative responses must be addressed in an attached laboratory narrative.

I, the undersigned, attest under the pains and penalties of perjury that, based upon my personal inquiry of those responsible for obtaining the information, the material contained in this analytical report is, to the best of my knowledge and belief, accurate and complete.

Authorized Signature: _____

Date: Wednesday, September 01, 2010

Printed Name: Greg Lawrence

Position: Assistant Lab Director

Environmental Laboratories, Inc.
587 East Middle Turnpike, P.O.Box 370, Manchester, CT 06045
Tel. (860) 645-1102 Fax (860) 645-0823

ACCREDITED IN ACCORDANCE WITH nelac NY # 11301

MCP Certification Report

September 01, 2010

SDG I.D.: GAZ38071

Phoenix reporting levels may exceed those referenced in the CAM protocol. Please refer to criteria sheet for comparisons to requested MCP standards.

The client requested a shorter list of elements than the 6010 MCP list.

8260 Volatile Organics:
The following compounds from the MCP 8260 analyte list were not performed: diethyl ether, diisopropyl ether, and ETBE.

Cyanide Narration

Were all QA/QC performance criteria specified in the MADEP document CAM achieved? Yes.

Instrument: Lachat 08/25/10-1 (AZ38071)

The samples were distilled in accordance with the method.
The initial calibration met criteria.

The calibration check standards (ICV,CCV) were within 15% of true value and were analyzed at a frequencey of one per ten samples.
The continuing calibration blanks (ICB,CCB) had concentrations less than the reporting level.

The method blank, laboratory control sample (LCS), and matrix spike were distilled with the samples.

Printed Name Greg Danielewski
Position: Chemist
Date: 8/25/2010

Instrument: Lachat 08/27/10-1 (AZ38071)

The samples were distilled in accordance with the method.
The initial calibration met criteria.

The calibration check standards (ICV,CCV) were within 15% of true value and were analyzed at a frequencey of one per ten samples.
The continuing calibration blanks (ICB,CCB) had concentrations less than the reporting level.

The method blank, laboratory control sample (LCS), and matrix spike were distilled with the samples.

Printed Name Greg Danielewski
Position: Chemist
Date: 8/27/2010

QC (Batch Specific)

All LCS recoveries were within 85 - 115 with the following exceptions: None.

I attest under the pains and penalties of perjury that, based upon my inquiry of those individuals immediately responsible for obtaining the information, the material contained in this report is, to the best of my knowledge and belief, accurate and complete.

Environmental Laboratories, Inc.
587 East Middle Turnpike, P.O.Box 370, Manchester, CT 06045
Tel. (860) 645-1102 Fax (860) 645-0823

MCP Certification Report

September 01, 2010

SDG I.D.: GAZ38071

Mercury Narration

Were all QA/QC performance criteria specified in the MADEP document CAM achieved? Yes.

Instrument: Merlin 08/26/10-1 (AZ38071)

The method preparation blank contains all of the acids and reagents as the samples; the instrument blanks do not.
The initial calibration met all criteria including a standard run at or below the reporting level.
All calibration verification standards (ICV, CCV) met criteria.
All calibration blank verification standards (ICB, CCB) met criteria.
The matrix spike sample is used to identify spectral interfernce for each batch of samples, if within 85-115%, no interference is observed and no further action is taken.

Printed Name Tina Hall
Position: Chemist
Date: 8/26/2010

QC (Batch Specific)

All LCS recoveries were within 80 - 120 with the following exceptions: None.

All LCSD recoveries were within 80 - 120 with the following exceptions: None.

All LCS/LCSD RPDs were less than 30% with the following exceptions: None.

I attest under the pains and penalties of perjury that, based upon my inquiry of those individuals immediately responsible for obtaining the information, the material contained in this report is, to the best of my knowledge and belief, accurate and complete.

ICP Narration

Were all QA/QC performance criteria specified in the MADEP document CAM achieved? No.

A trace amount of Copper was present in the preparation blank.

Instrument: Icp9 08/26/10-1 (AZ38071)

The initial calibration met criteria.
The continuing calibration standards met criteria for all the elements reported. The linear range is defined daily by the calibration range.
The continuing calibration blanks were less than the reporting level for the elements reported.
The ICSA and ICSAB were analyzed at the beginning and end of the run and were within criteria.

Printed Name Emily Kolominskaya
Position: Chemist
Date: 8/26/2010

Environmental Laboratories, Inc.
587 East Middle Turnpike, P.O.Box 370, Manchester, CT 06045
Tel. (860) 645-1102 Fax (860) 645-0823

MCP Certification Report

September 01, 2010

SDG I.D.: GAZ38071

QC (Batch Specific)

All LCS recoveries were within 75 - 125 with the following exceptions: None.

All LCSD recoveries were within 75 - 125 with the following exceptions: None.

All LCS/LCSD RPDs were less than 20% with the following exceptions: None.

I attest under the pains and penalties of perjury that, based upon my inquiry of those individuals immediately responsible for obtaining the information, the material contained in this report is, to the best of my knowledge and belief, accurate and complete.

SVOASIM Narration

Were all QA/QC performance criteria specified in the MADEP document CAM achieved? Yes.

Instrument: Chem04 08/26/10-1 (AZ38071)

The DDT breakdown and pentachlorophenol & benzidine peak tailing were not evaluated in the DFTPP tune.

In the event that lower detection levels were requested, the samples may have been analyzed by selective ion monitoring (SIM) mode.

Initial Calibration (Chem04/SIM_0825):
Greater than 90% of the target compounds met calibration criteria with a RSD <20% or >0.99 correlation coefficient. The following compounds had RSDs >20% and <0.99 correlation coefficient: Pentachlorophenol
The following compounds failed to meet the minimum required response factor: None

Continuing Calibration:
Greater than 80% of target compounds met continuing calibraion criteria with a %D <20. The following compunds had >20% difference from the initial calibration: None

If PAH/base neutral were requested, Phoenix utilized a method that contained a shortened list , so some of the compounds in the narrative may be non-applicable.

Printed Name Keith Aloisa
Position: Chemist
Date: 8/26/2010

QC Comments: QC Batch 60109 08/25/10 (AZ38071)

A LCS and LCS Duplicate were performed instead of a matrix spike and matrix spike duplicate.

PHOENIX

Environmental Laboratories, Inc.
587 East Middle Turnpike, P.O.Box 370, Manchester, CT 06045
Tel. (860) 645-1102 Fax (860) 645-0823

ACCREDITED IN ACCORDANCE WITH nelac NY # 11301

MCP Certification Report

September 01, 2010

SDG I.D.: GAZ38071

QC (Batch Specific)

All LCS recoveries were within 40 - 140 with the following exceptions: 2,4-Dimethylphenol, 4-Chloroaniline, Hexachlorocyclopentadiene, Pentachlorophenol, Pyridine

All LCSD recoveries were within 40 - 140 with the following exceptions: 2,4-Dimethylphenol, 2,4-Dinitrophenol, 4-Chloroaniline, Hexachlorocyclopentadiene, Pyridine

All LCS/LCSD RPDs were less than 30% with the following exceptions: 2,4-Dinitrophenol, 4,6-Dinitro-2-methylphenol, N-Nitrosodimethylamine, Pentachlorophenol

I attest under the pains and penalties of perjury that, based upon my inquiry of those individuals immediately responsible for obtaining the information, the material contained in this report is, to the best of my knowledge and belief, accurate and complete.

VOA Narration

Were all QA/QC performance criteria specified in the MADEP document CAM achieved? No.

1,2,3-Trichlorobenzene has LCS/LCSD recovery slightly above the upper range. This compound was not detected in the sample. No significant bias is suspected.

Instrument: Chem08 08/25/10-1 (AZ38071)

S -Side
Initial Calibration(RCPS_0808):
All SPCCs, CCCs and >80% of target compounds met criteria except that the following compounds had %RSDs >20%: None.

Continuing Calibration Verification:
All SPCCs, CCCs and >80% of target compounds met criteria. Internal standards were within the 50%-200% deviation from the initial calibration.
The following compounds had % Deviations >30%: 1,2,4-Trichlorobenzene, Naphthalene, 1,2,3-Trichlorobenzene

Printed Name Lynne Matteson
Position: Chemist
Date: 8/25/2010

QC (Batch Specific)

All LCS recoveries were within 70 - 130 with the following exceptions: None.

All LCSD recoveries were within 70 - 130 with the following exceptions: 1,2,3-Trichlorobenzene

All LCS/LCSD RPDs were less than 30% with the following exceptions: None.

I attest under the pains and penalties of perjury that, based upon my inquiry of those individuals immediately responsible for obtaining the information, the material contained in this report is, to the best of my knowledge and belief, accurate and complete.

VOA-DIOXANE Narration

Were all QA/QC performance criteria specified in the MADEP document CAM achieved? Yes.

Environmental Laboratories, Inc.
587 East Middle Turnpike, P.O.Box 370, Manchester, CT 06045
Tel. (860) 645-1102 Fax (860) 645-0823

MCP Certification Report

September 01, 2010

SDG I.D.: GAZ38071

Instrument: Chem05 08/25/10-1 (AZ38071)

1,4 dioxane was analyzed using a separate method consisting of the target compound, internal standards, and surrogates.

Initial Calibration Verification (CHEM05/DISM0625)
The following compounds had %RSDs >30%: None

Continuing Calibration Verification:
The following compounds had % Deviations >30%: None

Printed Name Lynne Matteson
Position: Chemist
Date: 8/25/2010

QC (Site Specific)

---------- Sample No: AZ38071 ----------

All LCS recoveries were within 70 - 130 with the following exceptions: None.

All LCSD recoveries were within 70 - 130 with the following exceptions: None.

All LCS/LCSD RPDs were less than 30% with the following exceptions: None.

All MSD recoveries were within 70 - 130 with the following exceptions: None.

A matrix effect is suspected when a MS/MSD recovery is outside of criteria. No further action is required if LCS/LCSD compounds are within criteria.

I attest under the pains and penalties of perjury that, based upon my inquiry of those individuals immediately responsible for obtaining the information, the material contained in this report is, to the best of my knowledge and belief, accurate and complete.

PHOENIX Environmental Laboratories, Inc.

CHAIN OF CUSTODY RECORD

587 East Middle Turnpike, P.O. Box 370, Manchester, CT 06040
Email: service@phoenixlabs.com Fax (860) 645-0823
Client Services (860) 645-8726

Temp 6°C Pg 1 of 1

Data Delivery:
☐ Fax #:
☒ Email: Sollerhead@g2a.com

Customer: G2A GeoEnvironmental
Address: 1 Edgewater Dr
Norwood MA 02062

Project: Central St. Siphon
Report to: Scott Ollerhead / Josh Seidel
Invoice to: " "

Project P.O:
Phone #: 781-278-5727
Fax #:

Client Sample - Information - Identification

Sampler's Signature: [signature] Date 8/25/10

Matrix Code:
DW=drinking water WW=wastewater S=soil/solid O=other
GW=groundwater SL=sludge A=air

Analysis Request

Phoenix Sample #	Customer Sample Identification	Sample Matrix	Date Sampled	Time Sampled	TSS	TRC	Hex Cr	Oil & Grease	HC	Cyanide	8260 VOC's	8270 SVOC's *	1,4 Dioxane	TAME & TBA	EDB by 504	PCB's LDL	Total Metals, Tri-Cr *	Soil VOA [ ] Methanol [ ] S. Bisulfate [ ] H20	GL Soil container ( ) oz	GL Soil container ( ) oz	40 ml VOA Vial [2] As is [5] HCl	GL Amber 1000ml [4] As is [1] H2SO4	PL As is [ ] 250ml [ ] 500ml	PL H2SO4 [ ] 250ml [ ] 500ml	PL HNO3 250ml	PL NaOH 250ml	Bacteria Bottle
38071	Beulah St RGP-1	GW	8-25-10	10:30	X	X	X	X	X	X	X	X	X	X							9	5	1		1	1	

Relinquished by:	Accepted by:	Date:	Time:
Joshua Seidel	[signature]	8-25-10	13:05
[signature]	Lori Blyden	8-25-10	17:00

Comments, Special Requirements or Regulations:
* Full Scan SIM
* See Bobbi

Turnaround:
☐ 1 Day*
☐ 2 Days*
☒ 3 Days*
☐ Standard
☐ Other

* SURCHARGE APPLIES

CT/RI
☐ RCP Cert.
☐ GW Protect.
☐ GA Mobility
☐ GB Mobility
☐ SW Protect.
☐ Res. Vol.
☐ Ind. Vol.
☐ Res. Criteria
☐ Other

MA
☒ MCP Cert.
☒ GW-1
☐ GW-2
☐ GW-3
☐ S-1
☐ S-2
☐ S-3
☐ MWRA eSMART
☐ Other

Data Format
☐ Excel
☒ PDF
☐ GIS/Key
☐ EQuIS
☐ Other

Data Package
☐ ASP-A
☐ NJ Reduced Deliv. *
☐ NJ Hazsite EDD
☒ Phoenix Std Report
☐ Other

State where samples were collected: MA