Mabbett & Associates, Inc.
Environmental Consultants & Engineers

5 Alfred Circle
Bedford, Massachusetts
01730-2346
Tel: (781) 275-6050
Fax: (781) 275-5651
info@mabbett.com
www.mabbett.com

DC 10/28/0 MAG910034

October 24, 2005

David M. Webster
Chief, Industrial Permits Branch
United States Environmental Protection Agency, Region 1
One Congress Street, Suite 1100
Boston, MA 02114-2023

Re: NPDES Remediation General Permit Application
BorgWarner Torq Transfer Systems, Inc.
New Bedford, MA
Project No. 1989058.068

Dear Mr. Webster:

On behalf of our client, BorgWarner Torq Transfer Systems, Inc. (BorgWarner), Mabbett & Associates, Inc. (M&A) is submitting the enclosed NPDES Remediation General Permit (RGP) MAG910000 application for the operation of a groundwater remediation system at Borg-Warner's former facility in New Bedford, MA.

Currently the treatment system is operating under a NPDES permit exclusion (Reference # 00-044), issued January 14, 2000. The treatment system started up on May 2, 2000.

Enclosed is the NOI application as well as supporting documentation. If you have any questions or require any additional information, please contact me or my associate David P. Cabral. We appreciate the USEPA's assistance on this project.

Very truly yours,

MABBETT & ASSOCIATES, INC.

BY:

Paul D. Steinberg, P.E., LSP
Vice-President

PDS/tw

Enclosures:
1. Notice of Intent
2. Supporting Documentation

cc: Ms. Anastasia Hamel (BorgWarner Torq Transfer Systems, Inc.) (MF/RF)

df: SSS, WFS

CERTIFIED RRR MAIL NO. 7004 0750 0000 8725 5433

© 2005, Mabbett & Associates, Inc.

S:\ADMINA\1989058\WEBSTER LTR EPA PERMIT APPL.DOC

Remediation General Permit Application

B. Suggested Form for Notice of Intent (NOI) for the Remediation General Permit

1. General site information. Please provide the following information about the site:

a) Name of **facility/site**: BorgWarner Torq Transfer Systems, Inc.		**Facility/site** address: 200 Theodore H. Rice Boulevard		
Location of **facility/site**: longitude: 70-57-03 latitude: 41-43-31	Facility SIC code(s): 3714 (PREVIOUS SIC CODE, FACILITY NO LONGER MANUFACTURES TRANSMISSIONS)	Street: 200 Theodore H. Rice Boulevard		
b) Name of **facility/site owner:** BorgWarner Torq Transfer Systems, Inc.		Town: New Bedford		
Email address of owner: ahamel@borgwarner.com		State: MA	Zip: 02745	County: Bristol
Telephone no.of facility/site **owner**: (248) 754-0839				
Fax no. of facility/site **owner**: (248) 754-9504		**Owner** is (check one): 1. Federal____ 2. State/Tribal_____ 3. Private ✓ 4. other, if so, describe:		
Address of **owner** (if different from site):				
Street: 3850 Hamlin Road				
Town: Auburn Hills	State: MI	Zip: 48326	County: Oakland	
c) Legal name of **operator**: Mabbett & Associates, Inc.	**Operator** telephone no: (781) 275-6050			
	Operator fax no.: (781) 275-5651		**Operator** email: steinberg@mabbett.com	
Operator contact name and title: Paul D. Steinberg, P.E., LSP, Vice-President				

Address of **operator** (if different from owner):	Street: 5 Alfred Circle		
Town: Bedford	State: MA	Zip: 01730	County: Middlesex

d) Check "yes" or "no" for the following:
1. Has a prior NPDES permit exclusion been granted for the discharge? Yes ✓ No___, if "yes," number: 00-044
2. Has a prior NPDES application (Form 1 & 2C) ever been filed for the discharge? Yes ✓ No___, if "yes," date and tracking #: August 25, 2000
3. Is the discharge a "new discharge"as defined by 40 CFR 122.2? Yes___ No ✓
4. For sites in Massachusetts, is the discharge covered under the MA Contingency Plan (MCP) and exempt from state permitting? Yes ✓ No__

e) Is site/facility subject to any State permitting or other action which is causing the generation of discharge? Yes ✓ No___ If "yes," please list: 1. site identification # assigned by the state of NH or MA: 4-0389 (MCP tracking #) 2. permit or license # assigned: 4-0389 3. state agency contact information: name, location, and telephone number: Gerard Martin, MA DEP SERO, (508) 946-2700	f) Is the site/facility covered by any other EPA permit, including: 1. multi-sector storm water general permit? Y___ N ✓, if Y, number: 2. phase I or II construction storm water general permit? Y___ N ✓, if Y, number: 3. individual NPDES permit? Y___ N ✓, if Y, number: 4. any other water quality related permit? Y___ N ✓, if Y, number:

2. Discharge information. Please provide information about the discharge, (attaching additional sheets as needed) including:

a) Describe the discharge activities for which the owner/applicant is seeking coverage:

Groundwater remediation system with discharge to unnamed wetland stream, which flows to Acushnet Cedar Swamp.

b) Provide the following information about each discharge:	1) Number of discharge points: 1	2) What is the **maximum** and **average flow rate** of discharge (in cubic feet per second, ft^3/s)? Max. flow 0.07 Average flow 0.03 Is maximum flow a **design value**? Y ✓ N___ For average flow, include the units and appropriate notation if this value is a design value or estimate if not available. Average flow is 0.03 cubic feet per second, or 12 gallons per minute

3) Latitude and longitude of each discharge within 100 feet: pt.1:long. 70-57-3 lat. 41-43-31; pt.2: long._____ lat._____; pt.3: long._____ lat._____; pt.4:long._____ lat._____; pt.5: long._____ lat._____; pt.6:long._____ lat._____; pt.7: long._____ lat._____; pt.8:long._____ lat._____; etc.

4) If hydrostatic testing, total volume of the discharge (gals): N/A	5) Is the discharge intermittent_____or seasonal_____? Is discharge ongoing Yes ✓ No_____?
c) Expected dates of discharge (mm/dd/yy): start 05/02/00 end PENDING MCP CLOSURE	
d) Please attach a line drawing or flow schematic showing water flow through the facility including: 1. sources of intake water, 2. contributing flow from the operation, 3. treatment units, and 4. discharge points and receiving waters(s).	

3. Contaminant information. In order to complete this section, the applicant will need to take a minimum of one sample of the untreated water and have it analyzed for **all** of the parameters listed in Appendix III. Historical data, (i.e., data taken no more than 2 years prior to the effective date of the permit) may be used if obtained pursuant to: i. Massachusetts' regulations 310 CMR 40.0000, the Massachusetts Contingency Plan ("Chapter 21E"); ii. New Hampshire's Title 50 RSA 485-A: Water Pollution and Waste Disposal or Title 50 RSA 485-C: Groundwater Protection Act; or iii. an EPA permit exclusion letter issued pursuant to 40 CFR 122.3, provided the data was analyzed with test methods that meet the requirements of this permit. Otherwise, a new sample shall be taken and analyzed.

a) Based on the analysis of the sample(s) of the untreated influent, the applicant must check the box of the sub-categories that the potential discharge falls within.

Gasoline Only	VOC Only	Primarily Metals	Urban Fill Sites	Contaminated Sumps	Mixed Contaminants	Aquifer Testing
Fuel Oils (and Other Oils) only ✓	VOC with Other Contaminants	Petroleum with Other Contaminants	Listed Contaminated Sites	Contaminated Dredge Condensates	Hydrostatic Testing of Pipelines/Tanks	Well Development or Rehabilitation

b) Based on the analysis of the untreated influent, the applicant must indicate whether each listed chemical is **believed present** or **believed absent** in the potential discharge. Attach additional sheets as needed.

PARAMETER	Believe Absent	Believe Present	# of Samples (1 min-imum)	Type of Sample (e.g., grab)	Analytical Method Used (method #)	Minimum Level (ML) of Test Method	Maximum daily value		Avg. daily value	
							concentration (ug/l)	mass (kg)	concentration (ug/l)	mass (kg)
1. Total Suspended Solids	✓		1	grab	160.2	5 mg/L	ND	0	ND	0
2. Total Residual Chlorine	✓		1	grab	330.1	.05mg/L	ND	0	ND	0
3. Total Petroleum Hydrocarbons		✓	25	grab	418.1	.55mg/L	2900	0.5	ND	0
4. Cyanide	✓		1	grab	335.2	5 ug/L	ND	0	ND	0
5. Benzene	✓		25	grab	624	1 ug/L	ND	0	ND	0
6. Toluene	✓		25	grab	624	1 ug/L	ND	0	ND	0
7. Ethylbenzene	✓		25	grab	624	1 ug/L	ND	0	ND	0
8. (m,p,o) Xylenes	✓		25	grab	624	3 ug/L	ND	0	ND	0
9. Total BTEX[4]	✓		25	grab	624	3 ug/L	ND	0	ND	0

[4] BTEX = Sum of Benzene, Toluene, Ethylbenzene, total Xylenes.

PARAMETER	Believe Absent	Believe Present	# of Samples (1 min-imum)	Type of Sample (e.g., grab)	Analytical Method Used (method #)	Minimum Level (ML) of Test Method	Maximum daily value		Avg. daily value	
							concentration (ug/l)	mass (kg)	concentration (ug/l)	mass (kg)
10. Ethylene Dibromide (1,2- Dibromo-methane)	✓		1	grab	504.1	.02ug/L	ND	0	ND	0
11. Methyl-tert-Butyl Ether (MtBE)		✓	25	grab	624	20 ug/L	25	0	ND	0
12. tert-Butyl Alcohol (TBA)	✓		1	grab	624	100ug/L	ND	0	ND	0
13. tert-Amyl Methyl Ether (TAME)	✓		1	grab	624	20 ug/L	ND	0	ND	0
14. Naphthalene		✓	15	grab	624	.2 ug/L	3.5	0	ND	0
15. Carbon Tetra-chloride	✓		1	grab	624	1.5ug/L	ND	0	ND	0
16. 1,4 Dichlorobenzene	✓		1	grab	624	5 ug/L	ND	0	ND	0
17. 1,2 Dichlorobenzene	✓		1	grab	624	5 ug/L	ND	0	ND	0
18. 1,3 Dichlorobenzene	✓		1	grab	624	5 ug/L	ND	0	ND	0
19. 1,1 Dichloroethane	✓		1	grab	624	1.5ug/L	ND	0	ND	0
20. 1,2 Dichloroethane	✓		1	grab	624	1.5ug/L	ND	0	ND	0
21. 1,1 Dichloroethylene	✓		1	grab	624	1 ug/L	ND	0	ND	0
22. cis-1,2 Dichloro-ethylene	✓		1	grab	624	1 ug/L	ND	0	ND	0
23. Dichloromethane (Methylene Chloride)	✓		1	grab	624	5 ug/L	ND	0	ND	0
24. Tetrachloroethylene	✓		1	grab	624	1.5ug/L	ND	0	ND	0

PARAMETER	Believe Absent	Believe Present	# of Samples (1 min-imum)	Type of Sample (e.g., grab)	Analytical Method Used (method #)	Minimum Level (ML) of Test Method	Maximum daily value		Avg. daily Value	
							concentration (ug/l)	mass (kg)	concentration (ug/l)	mass (kg)
25. 1,1,1 Trichloroethane	✓		1	grab	624	2 ug/L	ND	0	ND	0
26. 1,1,2 Trichloroethane	✓		1	grab	624	1.5ug/L	ND	0	ND	0
27. Trichloroethylene	✓		1	grab	624	1 ug/L	ND	0	ND	0
28. Vinyl Chloride	✓		1	grab	624	2 ug/L	ND	0	ND	0
29. Acetone	✓		1	grab	624	10 ug/L	ND	0	ND	0
30. 1,4 Dioxane	✓		1	grab	624	2 mg/L	ND	0.3	ND	0.1
31. Total Phenols	✓		1	grab	8270C	20 ug/L	ND	0	ND	0
32. Pentachlorophenol	✓		1	grab	8270C	20 ug/L	ND	0	ND	0
33. Total Phthalates [5] (Phthalate esthers)	✓		1	grab	8270C	9.9ug/L	ND	0	ND	0
34. Bis (2-Ethylhexyl) Phthalate [Di-(ethylhexyl) Phthalate]	✓		1	grab	8270C	9.9ug/L	ND	0	ND	0
35. Total Group I Polycyclic Aromatic Hydrocarbons (PAH)	✓		1	grab	8270C	0.8ug/L	ND	0	ND	0
a. Benzo(a) Anthracene	✓		1	grab	8270C	0.2ug/L	ND	0	ND	0
b. Benzo(a) Pyrene	✓		1	grab	8270C	0.2ug/L	ND	0	ND	0
c. Benzo(b)Fluoranthene	✓		1	grab	8270C	0.2ug/L	ND	0	ND	0
d. Benzo(k) Fluoranthene	✓		1	grab	8270C	0.2ug/L	ND	0	ND	0
e. Chrysene	✓		1	grab	8270C	0.2ug/L	ND	0	ND	0

[5] The sum of individual phthalate compounds.

PARAMETER	Believe Absent	Believe Present	# of Samples (1 min-imum)	Type of Sample (e.g., grab)	Analytical Method Used (method #)	Minimum Level (ML) of Test Method	Maximum daily value		Average daily value	
							concentration (ug/l)	mass (kg)	concentration (ug/l)	mass (kg)
f. Dibenzo(a,h) anthracene	✓		1	grab	8270C	0.2ug/L	ND	0	ND	0
g. Indeno(1,2,3-cd) Pyrene	✓		1	grab	8270C	0.2ug/L	ND	0	ND	0
36. Total Group II Polycyclic Aromatic Hydrocarbons (PAH)	✓		1	grab	8270C	0.2ug/L	ND	0	ND	0
h. Acenaphthene	✓		1	grab	8270C	0.2ug/L	ND	0	ND	0
i. Acenaphthylene	✓		1	grab	8270C	0.2ug/L	ND	0	ND	0
j. Anthracene	✓		1	grab	8270C	0.2ug/L	ND	0	ND	0
k. Benzo(ghi) Perylene	✓		1	grab	8270C	0.2ug/L	ND	0	ND	0
l. Fluoranthene	✓		1	grab	8270C	0.2ug/L	ND	0	ND	0
m. Fluorene	✓		1	grab	8270C	0.2ug/L	ND	0	ND	0
n. Naphthalene-	✓		1	grab	8270C	0.2ug/L	ND	0	ND	0
o. Phenanthrene	✓		1	grab	8270C	0.2ug/L	ND	0	ND	0
p. Pyrene	✓		1	grab	8270C	0.2ug/L	ND	0	ND	0
37. Total Polychlorinated Biphenyls (PCBs)	✓		1	grab	608	0.5ug/L	ND	0	ND	0
38. Antimony	✓		1	grab	200.9	5 ug/L	ND	0	ND	0
39. Arsenic	✓		1	grab	200.7	5 ug/L	ND	0	ND	0
40. Cadmium	✓		1	grab	213.2	0.2ug/L	ND	0	ND	0
41. Chromium III	✓		1	grab	200.7	10 ug/L	ND	0	ND	0
42. Chromium VI	✓		1	grab	3500	.01ug/L	ND	0	ND	0

PARAMETER	Believe Absent	Believe Present	# of Samples (1 min-imum)	Type of Sample (e.g., grab)	Analytical Method Used (method #)	Minimum Level (ML) of Test Method	Maximum daily value		Avg. daily value	
							concentration (ug/l)	mass (kg)	concentration (ug/l)	mass (kg)
43. Copper	✓		1	grab	200.7	10 ug/L	ND	0	ND	0
44. Lead	✓		1	grab	200.9	1 ug/L	ND	0	ND	0
45. Mercury	✓		1	grab	245.2	.2 ug/L	ND	0	ND	0
46. Nickel	✓		25	grab	200.7	10 ug/L	ND	0	ND	0
47. Selenium	✓		1	grab	200.7	5 ug/L	ND	0	ND	0
48. Silver	✓		1	grab	272.2	.4 ug/L	ND	0	ND	0
49. Zinc	✓		1	grab	200.7	25 ug/L	ND	0	ND	0
50. Iron		✓	1	grab	200.7	.05mg/L	17000	2.8	17000	1.1
Other (describe):										

c) For discharges where **metals** are believed present, please fill out the following:

Step 1: Do any of the metals in the influent have a **reasonable potential** to exceed the effluent limits in Appendix III (i.e., the limits set at zero to five dilutions)? Y ✓ N____	If yes, which metals? Iron
Step 2: For any metals which have **reasonable potential** to exceed the **Appendix III** limits, calculate the **dilution factor (DF)** using the formula in Part I.A.3.c) (step 2) of the NOI instructions or as determined by the State prior to the submission of this NOI. What is the dilution factor for applicable metals? Metals: Iron DF: 1.0	Look up the limit calculated at the corresponding dilution factor in **Appendix IV.** Do any of the metals in the **influent** have the potential to exceed the corresponding **effluent** limits in Appendix IV (i.e., is the influent concentration above the limit set at the calculated dilution factor)? Y ✓ N____ If "Yes," list which metals: Iron

4. Treatment system information. Please describe the treatment system using separate sheets as necessary, including:

a) A description of the treatment system, including a schematic of the proposed or existing treatment system:

BorgWarner previously operated an automotive transmission manufacturing facility onsite, resulting in a release of waste cutting oil to the groundwater. Mabbett & Associates operates a dual phase pump-and-treat system that addresses NAPL contamination onsite. Components of this system include three recovery wells, groundwater recovery pumps, product recovery pumps and a NAPL recovery groundwater treatment system. The major treatment system components include an oil/water separator, iron removal filter, bag filter, clay/anthracite column, and granular activated carbon adsorption. Refer to attached schematics.

b) Identify each applicable treatment unit (check all that apply):	Frac. tank	Air stripper	Oil/water separator ✓	Equalization tanks	Bag filter ✓	GAC filter ✓
	Chlorination	Dechlorination	Other (please describe): Iron Sequestration			

c) Proposed **average** and **maximum flow rates** (gallons per minute) for the discharge and the **design flow rate**(s) (gallons per minute) of the treatment system:
Average flow rate of discharge 12 gpm Maximum flow rate of treatment system 30 gpm Design flow rate of treatment system 30 gpm

d) A description of chemical additives being used or planned to be used (attach MSDS sheets):

FEREMEDE and TOLCIDE are environmentally friendly chemicals specifically developed for groundwater remediation. Feremede is used for iron sequestration and tolcide is a biocide used to control iron bacteria.
Both chemicals are approved for use in the system by the City of New Bedford Conservation Commission in an Order of Conditions which was recently renewed.

5. Receiving surface water(s). Please provide information about the receiving water(s), using separate sheets as necessary:

a) Identify the discharge pathway:	Direct____	Within facility__	Storm drain____	River/brook____	Wetlands ✓	Other (describe):

b) Provide a narrative description of the discharge pathway, including the name(s) of the receiving waters:

Discharged to Bordering Vegetated Wetland (BVW), subsequently flows to the Acushnet Cedar Swamp.

c) Attach a detailed map(s) indicating the site location and location of the outfall to the receiving water:
1. For multiple discharges, number the discharges sequentially.
2. For indirect dischargers, indicate the location of the discharge to the indirect conveyance and the discharge to surface water
The map should also include the location and distance to the nearest sanitary sewer as well as the locus of nearby sensitive receptors (based on USGS topographical mapping), such as surface waters, drinking water supplies, and wetland areas.

d) Provide the state water quality classification of the receiving water N/A,

e) Provide the reported or calculated seven day-ten year low flow (7Q10) of the receiving water N/A cfs
Please attach any calculation sheets used to support stream flow and dilution calculations.

f) Is the receiving water a listed 303(d) water quality impaired or limited water? Yes____ No ✓ If yes, for which pollutant(s)?

Is there a TMDL? Yes____ No ✓ If yes, for which pollutant(s)?

6. Results of Consultation with Federal Services: Please provide the following information according to requirements of Part I.B.4 and Appendices II and VII.

a) Are any listed threatened or endangered species, or designated critical habitat, in proximity to the discharge? Yes____ No ✓
Has any consultation with the federal services been completed ? No ✓ or is consultation underway? Yes____ No____
What were the results of the consultation with the U.S. Fish and Wildlife Service and/or National Marine Fisheries Service (~~check~~ one):
a "no jeopardy" opinion? _____ or written concurrence____ on a finding that the discharges are not likely to adversely affect any endangered species or critical habitat?

b) Are any historic properties listed or eligible for listing on the National Register of Historic Places located on the facility or site or in proximity to the discharge?
Yes_____ No ✓ Have any state or tribal historic preservation officer been consulted in this determination (Massachusetts only)? Yes ✓ No_____

7. Supplemental information. :

Please provide any supplemental information. Attach any analytical data used to support the application. Attach any certification(s) required by the general permit.

Analytical data from Alpha Analytical, Inc. is attached. In addition to the attached data, monthly monitoring for TPH, nickel, benzene, ethylbenzene, naphthalene, toluene, o-xylene, p/m-xylene, total BTEX, and MTBE has occured under the temporary NPDES permit since 2000.

A summary table of the past two years of data is provided and is the basis for the data in Section 3B.

Endangered Species habitats were checked by Mabbett & Associates using MassGIS databases. No endangered species habitat occurs onsite; nearest endangered species habitat is over 1/4 mile from the property line.

8. Signature Requirements: The Notice of Intent must be signed by the operator in accordance with the signatory requirements of 40 CFR Section 122.22, including the following certification:

I certify under penalty of law that this document and all attachments were prepared under my direction or supervision in accordance with a system designed to assure that qualified personnel properly gather and evaluate the information submitted. Based on my inquiry of the person or persons who manage the system, or those persons directly responsible for gathering the information, I certify that the information submitted is, to the best of my knowledge and belief, true, accurate, and complete. I certify that I am aware that there are significant penalties for submitting false information, including the possibility of fine and imprisonment for knowing violations.

Facility/Site Name: BorgWarner Torq Transfer Systems, Inc.

Operator signature:

Title: Paul D. Steinberg, P.E., LSP, Vice-President, Mabbett & Associates, Inc.

Date: 10/24/05

Site Location

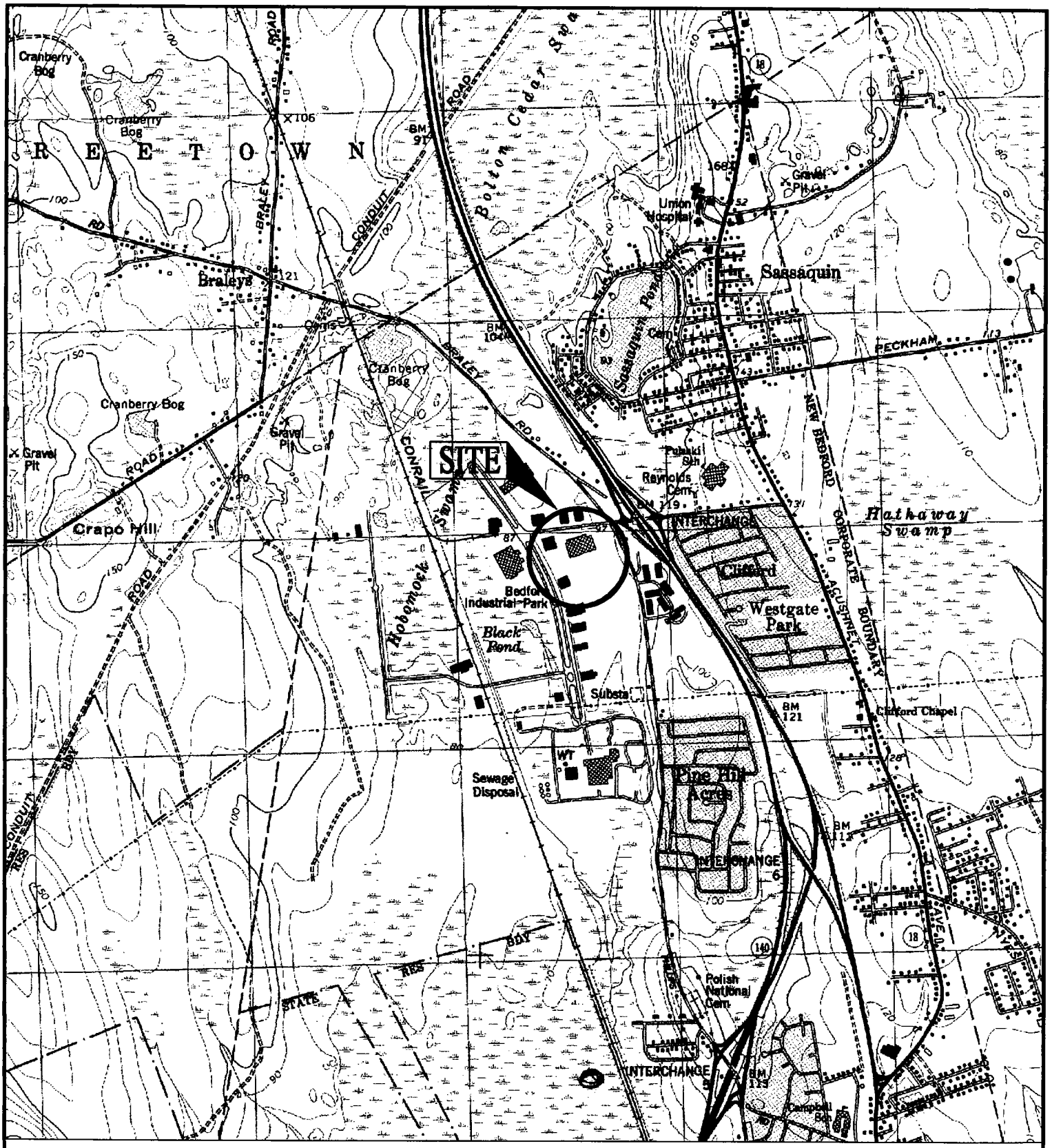

B W A P T S C

NEW BEDFORD, MA

Mabbett & Associates
Environmental Consultants & Engineers

SITE LOCATION MAP

SCALE: 1"=2000'

DR BY: JA

DATE: 10/21/05

AP BY: DPC

DWG NO. L-1

PROJ NO. 1989058.068

Site Plan

NOTES:

1. THIS PLAN WAS TAKEN FROM "PLAN OF LAND IN NEW BEDFORD, MA", AS PREPARED BY TIBBETTS ENGINEERING CORP. NEW BEDFORD, MA. DATED JAN 4, 1984.
2. MONITORING AND RECOVERY WELLS AND WETLANDS FLAGGING WERE LOCATED BY DAYLOR CONSULTING CORP. BRAINTREE, MA. AND TAKEN FROM "WELL LOCATION PLANS FOR BORG-WARNER CORP. THEODORE RICE BLVD., NEW BEDFORD, MA." DATED 5/13/93, 9/8/93, 12/13/95 AND 5/21/97.

LEGEND:

- RECOVERY WELL
- PROPERTY LINE
- WETLANDS FLAGS
- 100 FOOT BUFFER ZONE
- N/F NOW OR FORMERLY
- GWTS GROUNDWATER TREATMENT SYSTEM

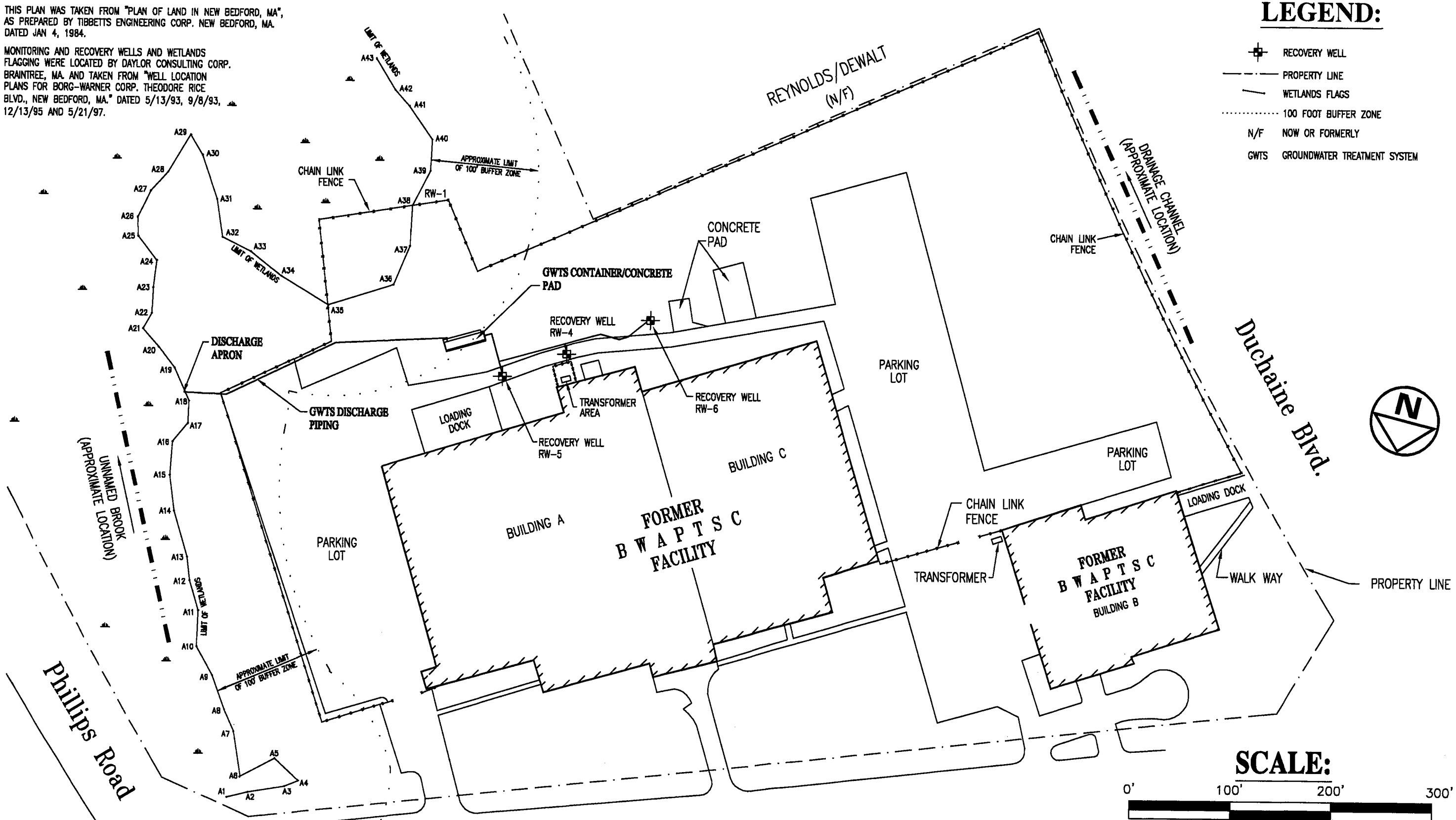

SCALE:

0' 100' 200' 300'

BWAPTSC NEW BEDFORD, MA.	SITE PLAN		DRAWING NO.
Mabbett & Associates Environmental Consultants & Engineers	SCALE: 1"=100'-0"	DR BY: DJA	L-2
	DATE: 10/24/05	AP BY: B	PROJECT NO. 1989058.068

Copyright, 2005
Mabbett & Associates, Inc

Flow Schematic
from Carbtrol Corporation

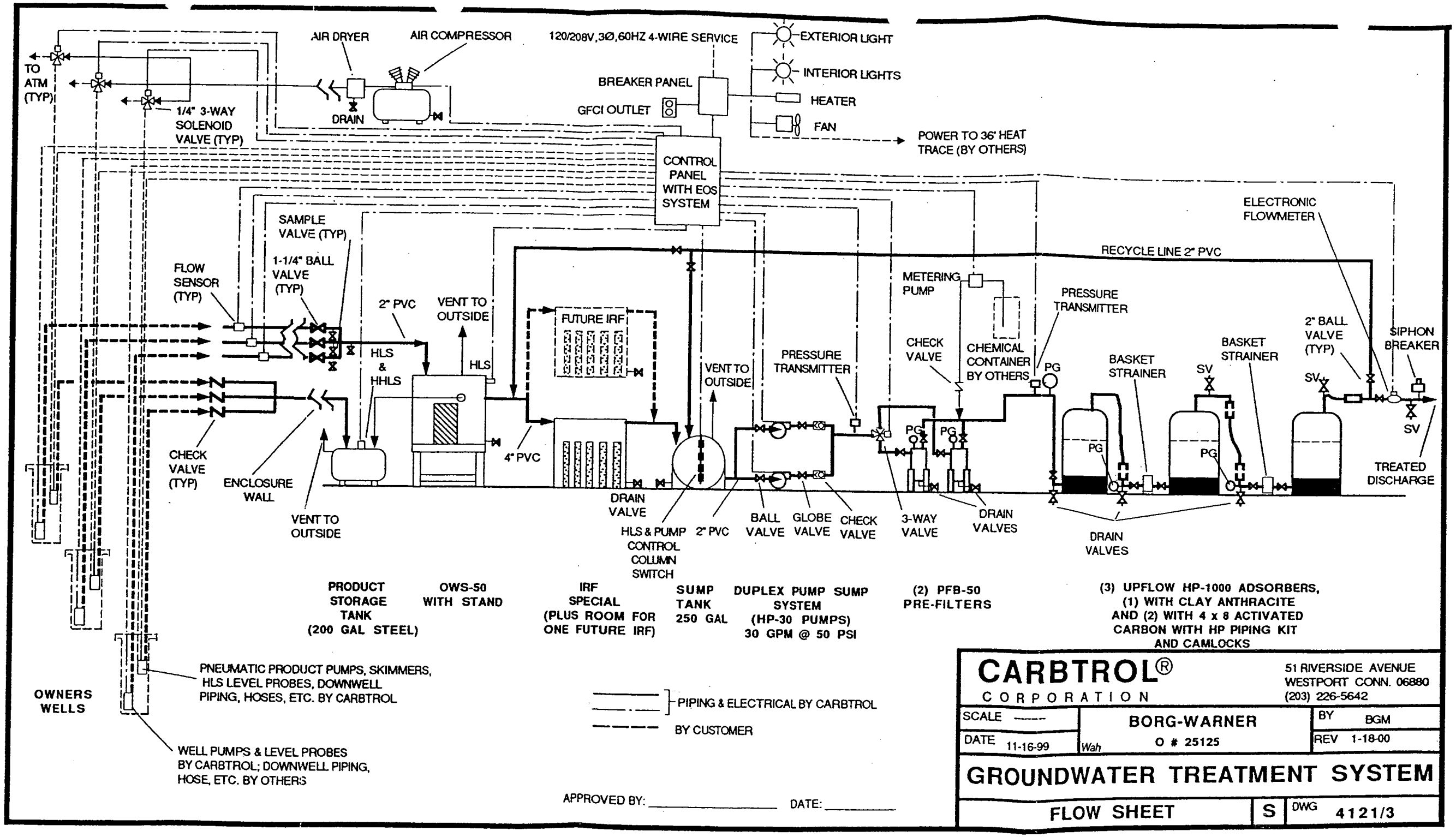

CARBTROL®
CORPORATION

51 RIVERSIDE AVENUE
WESTPORT CONN. 06880
(203) 226-5642

SCALE ———	BORG-WARNER	BY BGM
DATE 11-16-99	Wah O # 25125	REV 1-18-00

GROUNDWATER TREATMENT SYSTEM

FLOW SHEET | S | DWG 4121/3

Updated Flow Schematic
(M&A)

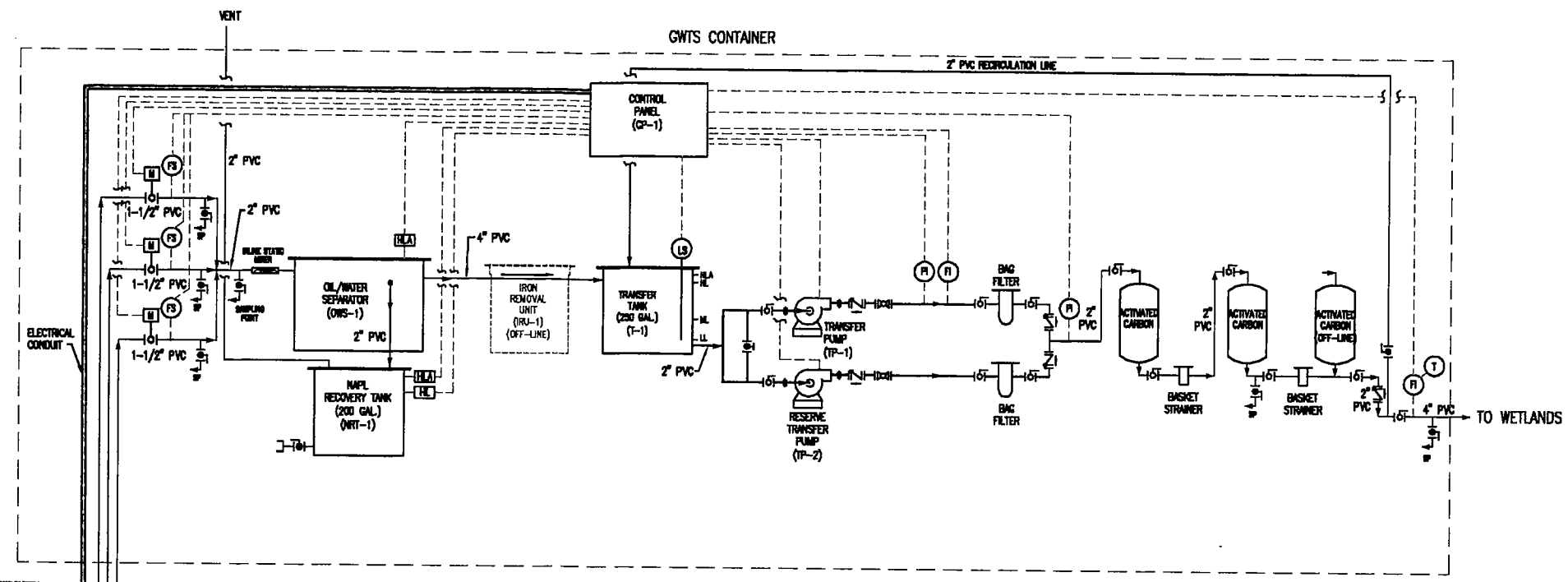

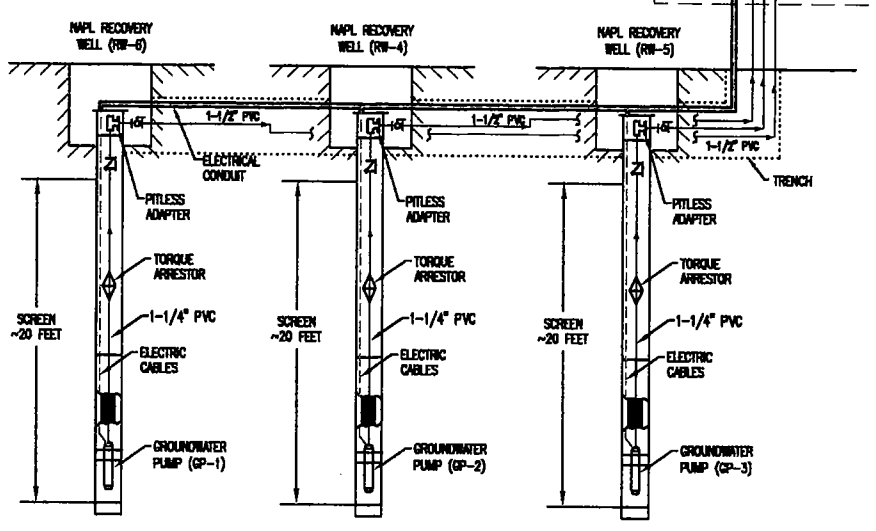

CONTROLS

TRANSFER TANK CONTROLS

HLA	HIGH LEVEL ALARM, SYSTEM SHUT DOWN
HL	TRANSFER PUMP OFF, RESERVE TRANSFER PUMP ON
ML	TRANSFER PUMP ON
LL	TRANSFER PUMPS OFF

NAPL RECOVERY TANK CONTROLS

HLA	HIGH LEVEL ALARM, SYSTEM SHUT DOWN
HL	HIGH LEVEL, GWTS OPERATOR PAGED

OIL/WATER SEPARATOR CONTROLS

HLA	HIGH LEVEL ALARM, SYSTEM SHUT DOWN

LEGEND

- PRESSURE INDICATOR WITH GAUGE
- CHECK VALVE
- CONTROL VALVE
- THREE WAY CONTROL VALVE
- FLOW SENSOR
- FLOW INDICATOR WITH TOTALIZER
- DIRECTION OF FLOW
- ELECTRIC SIGNAL
- PRESSURE VALVE
- UNION
- Y-STRAINER
- BALL VALVE
- SP — SAMPLING POINT

NOTES:

1. UNLESS OTHERWISE NOTED, ALL PIPES AND FITTINGS SHALL BE POLYVINYL CHLORIDE (PVC) SCHEDULE 80 INDUSTRIAL GRADE MANUFACTURED FROM TYPE 1, GRADE 1. PVC CONFORMING TO ASTM D-1784. ALL AT 150 POUND RATING, ASTM D-1875, ASTM D-2464 AND ASTM D-2467.
2. CONTRACTOR SHALL INSTALL UNIONS AND BALL VALVES AT ALL DROPS TO EQUIPMENT.
3. ALL MANUAL CONTROLLED VALVING SHALL NOT BE INSTALLED ANY HIGHER THAN 6'-0" ABOVE THE FINISHED FLOOR FOR EASY ACCESSIBILITY.
4. FLANGES SHALL BE STOCK FINISH, FLAT FACE, RATED 150 PSI WITH EPDM GASKET.
5. ALL GRAVITY DRAINAGE PIPING SHALL BE SLOPED ¼" PER FOOT.
6. FLEX CONNECTOR EXPANSION JOINTS SHALL BE INSTALLED ON BOTH THE SUCTION AND DISCHARGE SIDE OF THE TRANSFER PUMPS TO GUARD AGAINST VERATION RESULTING FROM PUMP START-UP.
7. UNION FITTINGS SHALL BE INSTALLED ON BOTH INLET AND OUTLET PIPING OF THE TRANSFER PUMPS.

These drawings shall be taken in a sense as diagrammatic. The size of pipes,mechanical ductwork,and support-associated components and all installation recommendations as shown are not intended to illustrate every offset and fitting nor every structural difficulty that will be encountered during installation of the work.

Copyright, 2006
Mabbett & Associates, Inc.

NO.	DATE	DESCRIPTION	DRN	CHK	APP
1	10/18/05	FOR REGULATORY USE ONLY	DJA		

REVISION

Mabbett & Associates, Inc.
BY:

BWAPTSC

NEW BEDFORD, MA.

Mabbett & Associates
Environmental Consultants & Engineers
6 Alfred Circle
Bedford, Massachusetts
01730-2366
Tel: (781) 275-6050
Fax: (781) 275-5651
info@mabbett.com
www.mabbett.com

GROUNDWATER TREATMENT SYSTEM PROCESS FLOW DIAGRAM

DRAWN DJA
CHECKED
ENGINEER
APPROVED
SCALE NONE
DATE

DWG. NO. L-4

PROJ. NO.

Lab Data

Table 1
Summary of Water Analyses
Groundwater Pump Treat System 2003-2005
New Bedford, MA
NPDES Permit Exclusion Reference #00-044

SAMPLING DATE	LAB SAMPLE ID	Hydrocarbons, Total(IR) TPHIR-418 (mg/l)	Nickel, Total NI-UI (mg/l)	Benzene 624 (ug/l)	Ethylbenzene 624 (ug/l)	Naphthalene 624 (ug/l)	Toluene 624 (ug/l)	o-Xylene 624 (ug/l)	p/m-Xylene 624 (ug/l)	Total BTEX (ug/l)	Methyl tert butyl ether 624 (ug/l)
	NPDES Permit Limits	5	0.1	5	NE	NE	NE	NE	NE	100	NE
9/18/2003	BW INF Influent	0.7	ND	ND	ND	ND	ND	ND	ND	ND	16
10/15/2003		ND	ND	ND	ND	ND	ND	ND	ND	ND	9.6
11/13/2003		0.59	ND	ND	ND	ND	ND	ND	ND	ND	25
1/7/2004		ND	ND	ND	ND	ND	ND	ND	ND	ND	3.2
1/19/2004		ND	ND	ND	ND	3.5	ND	ND	ND	ND	16
2/17/2004		ND	ND	ND	ND	ND	ND	ND	ND	ND	9.7
3/12/2004		ND	ND	ND	ND	ND	ND	ND	ND	ND	6.9
4/24/2004		ND	ND	ND	ND	ND	ND	ND	ND	ND	1.2
5/21/2004		ND	ND	ND	ND	ND	ND	ND	ND	ND	6.2
6/18/2004		ND	ND	ND	ND	ND	ND	ND	ND	ND	ND
7/15/2004		ND	ND	ND	ND	ND	ND	ND	ND	ND	ND
8/5/2004		ND	ND	ND	ND	ND	ND	ND	ND	ND	ND
9/10/2004		ND	ND	ND	ND	ND	ND	ND	ND	ND	ND
10/13/2004		2.9	ND	ND	ND	ND	ND	ND	ND	ND	ND
11/5/2004		ND	ND	ND	ND	ND	ND	ND	ND	ND	ND
12/10/2004		ND	ND	ND	ND	NA	ND	ND	ND	ND	ND
1/21/2005		ND	ND	ND	ND	NA	ND	ND	ND	ND	ND
2/16/2005		ND	ND	ND	ND	NA	ND	ND	ND	ND	ND
3/17/2005		ND	ND	ND	ND	NA	ND	ND	ND	ND	ND
4/8/2005		ND	ND	ND	ND	NA	ND	ND	ND	ND	ND
5/18/2005		ND	ND	ND	ND	NA	ND	ND	ND	ND	ND
6/17/2005		ND	ND	ND	ND	NA	ND	ND	ND	ND	ND
7/15/2005		ND	ND	ND	ND	NA	ND	ND	ND	ND	ND
8/12/2003		ND	ND	ND	ND	NA	ND	ND	ND	ND	ND
9/23/2005		ND	ND	ND	ND	NA	ND	ND	ND	ND	ND
9/18/2003	BW INT Intermediate	ND	NA	NA	NA	NA	NA	NA	NA	NA	NA
10/15/2003		ND	NA	NA	NA	NA	NA	NA	NA	NA	NA
11/13/2003		2	NA	NA	NA	NA	NA	NA	NA	NA	NA
1/7/2004		0.76	NA	NA	NA	NA	NA	NA	NA	NA	NA
1/19/2004		ND	NA	NA	NA	NA	NA	NA	NA	NA	NA
2/17/2004		ND	NA	NA	NA	NA	NA	NA	NA	NA	NA
3/12/2004		ND	NA	NA	NA	NA	NA	NA	NA	NA	NA
4/24/2004		ND	NA	NA	NA	NA	NA	NA	NA	NA	NA
5/21/2004		ND	NA	NA	NA	NA	NA	NA	NA	NA	NA
6/18/2004		ND	NA	NA	NA	NA	NA	NA	NA	NA	NA
7/15/2004		ND	NA	NA	NA	NA	NA	NA	NA	NA	NA
8/5/2004		ND	NA	NA	NA	NA	NA	NA	NA	NA	NA
9/10/2004		ND	NA	NA	NA	NA	NA	NA	NA	NA	NA
10/13/2004		ND	NA	NA	NA	NA	NA	NA	NA	NA	NA
11/5/2004		ND	NA	NA	NA	NA	NA	NA	NA	NA	NA
12/10/2004		ND	NA	NA	NA	NA	NA	NA	NA	NA	NA
1/21/2005		ND	NA	NA	NA	NA	NA	NA	NA	NA	NA
2/16/2005		ND	NA	NA	NA	NA	NA	NA	NA	NA	NA
3/17/2005		ND	NA	NA	NA	NA	NA	NA	NA	NA	NA
4/8/2005		ND	NA	NA	NA	NA	NA	NA	NA	NA	NA
5/18/2005		ND	NA	NA	NA	NA	NA	NA	NA	NA	NA
6/17/2005		ND	NA	NA	NA	NA	NA	NA	NA	NA	NA
7/15/2005		ND	NA	NA	NA	NA	NA	NA	NA	NA	NA
8/12/2005		ND	NA	NA	NA	NA	NA	NA	NA	NA	NA
9/23/2005		ND	NA	NA	NA	NA	NA	NA	NA	NA	NA

Copyright 2005, Mabbett & Associates, Inc.

Table 1
Summary of Water Analyses
Groundwater Pump Treat System 2003-2005
New Bedford, MA
NPDES Permit Exclusion Reference #00-044

SAMPLING DATE	LAB SAMPLE ID	Hydrocarbons, Total(IR)	Nickel, Total	Benzene	Ethylbenzene	Naphthalene	Toluene	o-Xylene	p/m-Xylene	Total BTEX	Methyl tert butyl
		TPHIR-418 (mg/l)	NI-UI (mg/l)	624 (ug/l)	624 (ug/l)	624 (ug/l)	624 (ug/l)	624 (ug/l)	624 (ug/l)	(ug/l)	ether 624 (ug/l)
	NPDES Permit Limits	5	0.1	5	NE	NE	NE	NE	NE	100	NE
9/18/2003	BW EFF Effluent	0.57	ND	ND	ND	ND	ND	ND	ND	ND	10
10/15/2003		ND	ND	ND	ND	ND	ND	ND	ND	ND	9.9
11/13/2003		1.2	ND	ND	ND	ND	ND	ND	ND	ND	24
1/7/2004		0.68	ND	ND	ND	ND	ND	ND	ND	ND	ND
1/19/2004		ND	ND	ND	ND	ND	ND	ND	ND	ND	22
2/17/2004		ND	ND	ND	ND	ND	ND	ND	ND	ND	13
3/12/2004		ND	ND	ND	ND	ND	ND	ND	ND	ND	5.6
4/24/2004		ND	ND	ND	ND	ND	ND	ND	ND	ND	1.5
5/21/2004		ND	ND	ND	ND	ND	ND	ND	ND	ND	3.7
6/18/2004		ND	ND	ND	ND	ND	ND	ND	ND	ND	ND
7/15/2004		ND	ND	ND	ND	ND	ND	ND	ND	ND	ND
8/5/2004		ND	ND	ND	ND	ND	ND	ND	ND	ND	ND
9/10/2004		ND	ND	ND	ND	ND	ND	ND	ND	ND	ND
10/13/2004		ND	ND	ND	ND	ND	ND	ND	ND	ND	ND
11/5/2004		ND	0.0402 - 0.506[1]	ND	ND	ND	ND	ND	ND	ND	ND
12/10/2004		ND	ND	ND	ND	ND	NA	ND	ND	ND	ND
1/21/2005		ND	ND	ND	ND	NA	ND	ND	ND	ND	ND
2/16/2005		ND	0.043 [2]	ND	ND	NA	ND	ND	ND	ND	ND
3/17/2005		ND	ND	ND	ND	NA	ND	ND	ND	ND	ND
4/8/2005		ND	ND	ND	ND	NA	ND	ND	ND	ND	ND
5/18/2005		ND	ND	ND	ND	NA	ND	ND	ND	ND	ND
6/17/2005		ND	ND	ND	ND	NA	ND	ND	ND	ND	ND
7/15/2005		ND	0.029 [3]	ND	ND	NA	ND	ND	ND	ND	ND
8/12/2005		ND	ND	ND	ND	NA	ND	ND	ND	ND	ND
9/23/2005		ND	ND	ND	ND	NA	ND	ND	ND	ND	ND

Notes:
ND = Non-detected
NE = Not established
NA= Not analyzed
Acetone was detected in the Effluent sample collected on September 18, 2003 at a concentration of 7.3 ug/l.
No standard for acetone was specfied in the NPDES Exclusion Permit #00-044
A separate analysis for TPH via Method 8100 was performed on the samples collected on October 15, 2003

1. Initial sample results from the effluent sample indicated 0.506 mg/L which appears to be an anonomly based on influent results and historical effluent results for nickel. Additional analyses on two other sample containers collected from the effluent during the same sampling event indicated results of .0402 mg/L and .0679 mg/L which were below the discharge limit. Sample results from the December 10, 2004 sampling event indicated Nickel results were non-detect.

2. Initial sample results from the effluent sample indicated 0.043 mg/L which appears to be an anonomly based on influent results and historical effluent results for nickel. Sample results from the March 17, 2005 sampling event indicated Nickel results were non-detect.

3. Initial sample results from the effluent sample indicated 0.029 mg/L which appears to be an anonomly based on influent results and historical effluent results for nickel. Sample results from the August 12, 2005 sampling event indicated Nickel results were non-detect.

Copyright 2005, Mabbett & Associates, Inc.

ALPHA ANALYTICAL LABORATORIES

Eight Walkup Drive
Westborough, Massachusetts 01581-1019
(508) 898-9220 www.alphalab.com

MA:M-MA086 NH:200301-A CT:PH-0574 ME:MA086 RI:65 NY:11148 NJ:MA935 Army:USACE

CERTIFICATE OF ANALYSIS

Client: Mabbett & Associates

Address: 5 Alfred Circle

Bedford, MA 01730

Attn: Mr. William Simons

Project Number: 1989058.068

Site: BORG WARNER

Laboratory Job Number: L0511951

Date Received: 07-OCT-2005

Date Reported: [sysdate1]

Delivery Method: Client

ALPHA SAMPLE NUMBER	CLIENT IDENTIFICATION	SAMPLE LOCATION
L0511951-01	INF-10-7-05	NEW BEDFORD

I, the undersigned, attest under the pains and penalties of perjury that, based upon my personal inquiry of those responsible for obtaining the information, the material contained in this report is, to the best of my knowledge and belief, accurate and complete. This certificate of analysis is not complete unless this page accompanies any and all pages of this report.

Authorized by: [sig] _____ [sigline]
[sigline2]

ALPHA ANALYTICAL LABORATORIES
NARRATIVE REPORT

Laboratory Job Number: L0511951

Volatile Organics

tert butyl alcohol and TAME were analyzed via a one point calibration.

ALPHA ANALYTICAL LABORATORIES
CERTIFICATE OF ANALYSIS

MA:M-MA086 NH:200301-A CT:PH-0574 ME:MA086 RI:65 NY:11148 NJ:MA935 Army:USACE

Laboratory Sample Number: L0511951-01
INF-10-7-05
Sample Matrix: WATER

Date Collected: 07-OCT-2005 10:00
Date Received : 07-OCT-2005
Date Reported : [sysdate1]

Condition of Sample: Satisfactory

Field Prep: None

Number & Type of Containers: 6-Amber,4-Plastic,2-Vial

PARAMETER	RESULT	UNITS	RDL	REF	METHOD	DATE PREP	DATE ANAL	ID
Solids, Total Suspended	ND	mg/l	5.0	4	160.2		1011 11:25	DT
Cyanide, Total	ND	mg/l	0.005	4	335.2	1015 11:00	1017 15:46	DD
Chlorine, Total Residual	ND	mg/l	0.05	4	330.1		1008 01:40	DD
TPH	ND	mg/l	4.00			1014 14:00	1017 12:30	AT
Chromium, Hexavalent	ND	mg/l	0.01	30	3500CR-D	1007 22:00	1007 22:00	JT
Total Metals				19	200.7			
Antimony, Total	ND	mg/l	0.005	3	200.9	1017 20:30	1018 17:03	PY
Arsenic, Total	ND	mg/l	0.005	19	200.7	1011 19:00	1012 10:58	MG
Cadmium, Total	ND	mg/l	0.0002	4	213.2	1017 20:30	1018 20:12	PY
Chromium, Total	ND	mg/l	0.01	19	200.7	1011 19:00	1012 10:58	MG
Copper, Total	ND	mg/l	0.01	19	200.7	1011 19:00	1012 10:58	MG
Iron, Total	17.	mg/l	0.05	19	200.7	1011 19:00	1012 10:58	MG
Lead, Total	ND	mg/l	0.001	3	200.9	1017 20:30	1019 00:22	PY
Mercury, Total	ND	mg/l	0.0002	4	245.2	1021 14:00	1021 16:43	HG
Nickel, Total	ND	mg/l	0.025	19	200.7	1011 19:00	1012 10:58	MG
Selenium, Total	ND	mg/l	0.005	19	200.7	1011 19:00	1012 10:58	MG
Silver, Total	ND	mg/l	0.0004	4	272.2	1017 20:30	1019 12:09	PY
Zinc, Total	ND	mg/l	0.05	19	200.7	1011 19:00	1012 10:58	MG
Pesticides by GC 504				14	504.1	1021 11:30	1021 14:54	JB
1,2-Dibromoethane	ND	ug/l	0.019					
Volatile Organics by GC/MS 624				5	624		1011 12:17	MM
Methylene chloride	ND	ug/l	5.0					
1,1-Dichloroethane	ND	ug/l	1.5					
Chloroform	ND	ug/l	1.5					
Carbon tetrachloride	ND	ug/l	1.0					
1,2-Dichloropropane	ND	ug/l	3.5					
Dibromochloromethane	ND	ug/l	1.0					
1,1,2-Trichloroethane	ND	ug/l	1.5					
2-Chloroethylvinyl ether	ND	ug/l	10.					
Tetrachloroethene	ND	ug/l	1.5					
Chlorobenzene	ND	ug/l	3.5					

Comments: Complete list of References and Glossary of Terms found in Addendum I

ALPHA ANALYTICAL LABORATORIES
CERTIFICATE OF ANALYSIS

Laboratory Sample Number: L0511951-01
INF-10-7-05

PARAMETER	RESULT	UNITS	RDL	REF	METHOD	DATE PREP	DATE ANAL	ID
Volatile Organics by GC/MS 624 cont'd				5	624		1011 12:17	MM
Trichlorofluoromethane	ND	ug/l	5.0					
1,2-Dichloroethane	ND	ug/l	1.5					
1,1,1-Trichloroethane	ND	ug/l	2.0					
Bromodichloromethane	ND	ug/l	1.0					
trans-1,3-Dichloropropene	ND	ug/l	1.5					
cis-1,3-Dichloropropene	ND	ug/l	1.5					
Bromoform	ND	ug/l	1.0					
1,1,2,2-Tetrachloroethane	ND	ug/l	1.0					
Benzene	ND	ug/l	1.0					
Toluene	ND	ug/l	1.0					
Ethylbenzene	ND	ug/l	1.0					
Chloromethane	ND	ug/l	10.					
Bromomethane	ND	ug/l	5.0					
Vinyl chloride	ND	ug/l	2.0					
Chloroethane	ND	ug/l	2.0					
1,1-Dichloroethene	ND	ug/l	1.0					
trans-1,2-Dichloroethene	ND	ug/l	1.5					
cis-1,2-Dichloroethene	ND	ug/l	1.0					
Trichloroethene	ND	ug/l	1.0					
1,2-Dichlorobenzene	ND	ug/l	5.0					
1,3-Dichlorobenzene	ND	ug/l	5.0					
1,4-Dichlorobenzene	ND	ug/l	5.0					
p/m-Xylene	ND	ug/l	2.0					
o-xylene	ND	ug/l	1.0					
Xylene (Total)	ND	ug/l	2.0					
Styrene	ND	ug/l	1.0					
Acetone	ND	ug/l	10.					
Carbon disulfide	ND	ug/l	5.0					
2-Butanone	ND	ug/l	10.					
Vinyl acetate	ND	ug/l	20.					
4-Methyl-2-pentanone	ND	ug/l	10.					
2-Hexanone	ND	ug/l	10.					
Acrolein	ND	ug/l	20.					
Acrylonitrile	ND	ug/l	10.					
Methyl tert butyl ether	ND	ug/l	20.					
1,4-Dioxane	ND	ug/l	2000					
Tert-Butyl Alcohol	ND	ug/l	100					
Tertiary-Amyl Methyl Ether	ND	ug/l	20.					
Surrogate(s)	Recovery		QC Criteria					
Pentafluorobenzene	99.0	%						
Fluorobenzene	93.0	%						
4-Bromofluorobenzene	106.	%						
SVOC's by GC/MS 8270				1	8270C	1013 19:00	1020 12:10	RL
Acenaphthene	ND	ug/l	4.9					
Benzidine	ND	ug/l	49.					
1,2,4-Trichlorobenzene	ND	ug/l	4.9					
Hexachlorobenzene	ND	ug/l	4.9					

Comments: Complete list of References and Glossary of Terms found in Addendum I

ALPHA ANALYTICAL LABORATORIES
CERTIFICATE OF ANALYSIS

Laboratory Sample Number: L0511951-01
INF-10-7-05

PARAMETER	RESULT	UNITS	RDL	REF	METHOD	DATE PREP	DATE ANAL	ID
SVOC's by GC/MS 8270 cont'd				1	8270C	1013 19:00	1020 12:10	RL
Bis(2-chloroethyl)ether	ND	ug/l	4.9					
1-Chloronaphthalene	ND	ug/l	4.9					
2-Chloronaphthalene	ND	ug/l	5.9					
1,2-Dichlorobenzene	ND	ug/l	4.9					
1,3-Dichlorobenzene	ND	ug/l	4.9					
1,4-Dichlorobenzene	ND	ug/l	4.9					
3,3'-Dichlorobenzidine	ND	ug/l	49.					
2,4-Dinitrotoluene	ND	ug/l	5.9					
2,6-Dinitrotoluene	ND	ug/l	4.9					
Azobenzene	ND	ug/l	4.9					
Fluoranthene	ND	ug/l	4.9					
4-Chlorophenyl phenyl ether	ND	ug/l	4.9					
4-Bromophenyl phenyl ether	ND	ug/l	4.9					
Bis(2-chloroisopropyl)ether	ND	ug/l	4.9					
Bis(2-chloroethoxy)methane	ND	ug/l	4.9					
Hexachlorobutadiene	ND	ug/l	9.9					
Hexachlorocyclopentadiene	ND	ug/l	9.9					
Hexachloroethane	ND	ug/l	4.9					
Isophorone	ND	ug/l	4.9					
Naphthalene	ND	ug/l	4.9					
Nitrobenzene	ND	ug/l	4.9					
NDPA/DPA	ND	ug/l	15.					
n-Nitrosodi-n-propylamine	ND	ug/l	4.9					
Bis(2-ethylhexyl)phthalate	ND	ug/l	9.9					
Butyl benzyl phthalate	ND	ug/l	4.9					
Di-n-butylphthalate	ND	ug/l	4.9					
Di-n-octylphthalate	ND	ug/l	4.9					
Diethyl phthalate	ND	ug/l	4.9					
Dimethyl phthalate	ND	ug/l	4.9					
Benzo(a)anthracene	ND	ug/l	4.9					
Benzo(a)pyrene	ND	ug/l	4.9					
Benzo(b)fluoranthene	ND	ug/l	4.9					
Benzo(k)fluoranthene	ND	ug/l	4.9					
Chrysene	ND	ug/l	4.9					
Acenaphthylene	ND	ug/l	4.9					
Anthracene	ND	ug/l	4.9					
Benzo(ghi)perylene	ND	ug/l	4.9					
Fluorene	ND	ug/l	4.9					
Phenanthrene	ND	ug/l	4.9					
Dibenzo(a,h)anthracene	ND	ug/l	4.9					
Indeno(1,2,3-cd)pyrene	ND	ug/l	6.9					
Pyrene	ND	ug/l	4.9					
Benzo(e)pyrene	ND	ug/l	4.9					
Biphenyl	ND	ug/l	4.9					
Perylene	ND	ug/l	4.9					
Aniline	ND	ug/l	9.9					
4-Chloroaniline	ND	ug/l	4.9					
1-Methylnaphthalene	ND	ug/l	4.9					
2-Nitroaniline	ND	ug/l	4.9					

Comments: Complete list of References and Glossary of Terms found in Addendum I

ALPHA ANALYTICAL LABORATORIES
CERTIFICATE OF ANALYSIS

Laboratory Sample Number: L0511951-01
INF-10-7-05

PARAMETER	RESULT	UNITS	RDL	REF	METHOD	DATE PREP	DATE ANAL	ID
SVOC's by GC/MS 8270 cont'd				1	8270C	1013 19:00	1020 12:10	RL
3-Nitroaniline	ND	ug/l	4.9					
4-Nitroaniline	ND	ug/l	6.9					
Dibenzofuran	ND	ug/l	4.9					
a,a-Dimethylphenethylamine	ND	ug/l	49.					
Hexachloropropene	ND	ug/l	9.9					
Nitrosodi-n-butylamine	ND	ug/l	9.9					
2-Methylnaphthalene	ND	ug/l	4.9					
1,2,4,5-Tetrachlorobenzene	ND	ug/l	20.					
Pentachlorobenzene	ND	ug/l	20.					
a-Naphthylamine	ND	ug/l	20.					
b-Naphthylamine	ND	ug/l	20.					
Phenacetin	ND	ug/l	9.9					
Dimethoate	ND	ug/l	20.					
4-Aminobiphenyl	ND	ug/l	9.9					
Pentachloronitrobenzene	ND	ug/l	9.9					
Isodrin	ND	ug/l	9.9					
p-Dimethylaminoazobenzene	ND	ug/l	9.9					
Chlorobenzilate	ND	ug/l	20.					
3-Methylcholanthrene	ND	ug/l	20.					
Ethyl Methanesulfonate	ND	ug/l	15.					
Acetophenone	ND	ug/l	20.					
Nitrosodipiperidine	ND	ug/l	20.					
7,12-Dimethylbenz(a)anthracene	ND	ug/l	9.9					
n-Nitrosodimethylamine	ND	ug/l	49.					
2,4,6-Trichlorophenol	ND	ug/l	4.9					
p-Chloro-m-cresol	ND	ug/l	4.9					
2-Chlorophenol	ND	ug/l	5.9					
2,4-Dichlorophenol	ND	ug/l	9.9					
2,4-Dimethylphenol	ND	ug/l	9.9					
2-Nitrophenol	ND	ug/l	20.					
4-Nitrophenol	ND	ug/l	9.9					
2,4-Dinitrophenol	ND	ug/l	20.					
4,6-Dinitro-o-cresol	ND	ug/l	20.					
Pentachlorophenol	ND	ug/l	20.					
Phenol	ND	ug/l	6.9					
2-Methylphenol	ND	ug/l	5.9					
3-Methylphenol/4-Methylphenol	ND	ug/l	5.9					
2,4,5-Trichlorophenol	ND	ug/l	4.9					
2,6-Dichlorophenol	ND	ug/l	9.9					
Benzoic Acid	ND	ug/l	49.					
Benzyl Alcohol	ND	ug/l	9.9					
Carbazole	ND	ug/l	4.9					
Pyridine	ND	ug/l	49.					
2-Picoline	ND	ug/l	20.					
Pronamide	ND	ug/l	20.					
Methyl methanesulfonate	ND	ug/l	20.					

Comments: Complete list of References and Glossary of Terms found in Addendum I

ALPHA ANALYTICAL LABORATORIES
CERTIFICATE OF ANALYSIS

Laboratory Sample Number: L0511951-01
INF-10-7-05

PARAMETER	RESULT	UNITS	RDL	REF	METHOD	DATE PREP	DATE ANAL	ID
SVOC's by GC/MS 8270 cont'd				1	8270C	1013 19:00	1020 12:10	RL
Surrogate(s)	Recovery		QC Criteria					
2-Fluorophenol	39.0	%						
Phenol-d6	33.0	%						
Nitrobenzene-d5	72.0	%						
2-Fluorobiphenyl	73.0	%						
2,4,6-Tribromophenol	90.0	%						
4-Terphenyl-d14	102.	%						
PAH by GC/MS SIM 8270M				1	8270C-M	1013 19:00	1018 17:18	RL
Acenaphthene	ND	ug/l	0.20					
2-Chloronaphthalene	ND	ug/l	0.20					
Fluoranthene	ND	ug/l	0.20					
Hexachlorobutadiene	ND	ug/l	0.49					
Naphthalene	ND	ug/l	0.20					
Benzo(a)anthracene	ND	ug/l	0.20					
Benzo(a)pyrene	ND	ug/l	0.20					
Benzo(b)fluoranthene	ND	ug/l	0.20					
Benzo(k)fluoranthene	ND	ug/l	0.20					
Chrysene	ND	ug/l	0.20					
Acenaphthylene	ND	ug/l	0.20					
Anthracene	ND	ug/l	0.20					
Benzo(ghi)perylene	ND	ug/l	0.20					
Fluorene	ND	ug/l	0.20					
Phenanthrene	ND	ug/l	0.20					
Dibenzo(a,h)anthracene	ND	ug/l	0.20					
Indeno(1,2,3-cd)Pyrene	ND	ug/l	0.20					
Pyrene	ND	ug/l	0.20					
1-Methylnaphthalene	ND	ug/l	0.20					
2-Methylnaphthalene	ND	ug/l	0.20					
Pentachlorophenol	ND	ug/l	0.79					
Hexachlorobenzene	ND	ug/l	0.79					
Perylene	ND	ug/l	0.20					
Biphenyl	ND	ug/l	0.20					
2,6-Dimethylnaphthalene	ND	ug/l	0.20					
1-Methylphenanthrene	ND	ug/l	0.20					
Benzo(e)Pyrene	ND	ug/l	0.20					
Hexachloroethane	ND	ug/l	0.79					
Surrogate(s)	Recovery		QC Criteria					
2-Fluorophenol	42.0	%	21-120					
Phenol-d6	34.0	%	10-120					
Nitrobenzene-d5	63.0	%	23-120					
2-Fluorobiphenyl	60.0	%	43-120					
2,4,6-Tribromophenol	68.0	%	10-120					
4-Terphenyl-d14	70.0	%	33-120					
Polychlorinated Biphenyls				5	608	1010 21:45	1018 20:45	SS
Aroclor 1221	ND	ug/l	0.500					
Aroclor 1232	ND	ug/l	0.500					

Comments: Complete list of References and Glossary of Terms found in Addendum I

ALPHA ANALYTICAL LABORATORIES
CERTIFICATE OF ANALYSIS

Laboratory Sample Number: L0511951-01
INF-10-7-05

PARAMETER	RESULT	UNITS	RDL	REF	METHOD	DATE PREP	DATE ANAL	ID
Polychlorinated Biphenyls cont'd				5	608	1010 21:45	1018 20:45	SS
Aroclor 1242/1016	ND	ug/l	0.500					
Aroclor 1248	ND	ug/l	0.500					
Aroclor 1254	ND	ug/l	0.500					
Aroclor 1260	ND	ug/l	0.500					
Surrogate(s)	Recovery		QC Criteria					
2,4,5,6-Tetrachloro-m-xylene	61.0	%	30-150					
Decachlorobiphenyl	64.0	%	30-150					

Comments: Complete list of References and Glossary of Terms found in Addendum I

ALPHA ANALYTICAL LABORATORIES
QUALITY ASSURANCE BATCH DUPLICATE ANALYSIS

Laboratory Job Number: L0511951

Parameter	Value 1	Value 2	Units	RPD	RPD Limits
Solids, Total Suspended for sample(s) 01 (L0511893-02, WG216894-2)					
Solids, Total Suspended	70.	67.	mg/l	4	20
Cyanide, Total for sample(s) 01 (L0511915-02, WG217464-4)					
Cyanide, Total	ND	ND	mg/l	NC	30
Chlorine, Total Residual for sample(s) 01 (L0511951-01, WG216701-3)					
Chlorine, Total Residual	ND	ND	mg/l	NC	
TPH for sample(s) 01 (L0512140-01, WG217526-4)					
TPH	ND	ND	mg/l	NC	34
Chromium, Hexavalent for sample(s) 01 (L0511951-01, WG216700-4)					
Chromium, Hexavalent	ND	ND	mg/l	NC	
Total Metals for sample(s) 01 (L0512184-01, WG217584-1)					
Antimony, Total	ND	ND	mg/l	NC	
Cadmium, Total	ND	ND	mg/l	NC	
Silver, Total	ND	ND	mg/l	NC	
Total Metals for sample(s) 01 (L0511951-01, WG216987-1)					
Arsenic, Total	ND	ND	mg/l	NC	
Chromium, Total	ND	ND	mg/l	NC	
Copper, Total	ND	ND	mg/l	NC	
Iron, Total	17.	17.	mg/l	0	
Nickel, Total	ND	ND	mg/l	NC	
Selenium, Total	ND	ND	mg/l	NC	
Zinc, Total	ND	ND	mg/l	NC	
Total Metals for sample(s) 01 (L0512140-01, WG218157-3)					
Mercury, Total	ND	ND	mg/l	NC	
Volatile Organics by GC/MS 624 for sample(s) 01 (L0511860-10, WG216901-2)					
Methylene chloride	ND	ND	ug/l	NC	
Chlorobenzene	ND	ND	ug/l	NC	
1,2-Dichloroethane	ND	ND	ug/l	NC	
Benzene	ND	ND	ug/l	NC	
Toluene	ND	ND	ug/l	NC	
1,2-Dichlorobenzene	ND	ND	ug/l	NC	
1,3-Dichlorobenzene	ND	ND	ug/l	NC	
1,4-Dichlorobenzene	ND	ND	ug/l	NC	
Carbon disulfide	ND	ND	ug/l	NC	
1,4-Dioxane	ND	ND	ug/l	NC	
Surrogate(s)	Recovery				QC Criteria
Pentafluorobenzene	97.0	98.0	%	1	
Fluorobenzene	93.0	93.0	%	0	
4-Bromofluorobenzene	107.	109.	%	2	

ALPHA ANALYTICAL LABORATORIES
QUALITY ASSURANCE BATCH DUPLICATE ANALYSIS

Laboratory Job Number: L0511951

Continued

Parameter	Value 1	Value 2	Units	RPD	RPD Limits
Polychlorinated Biphenyls for sample(s) 01 (L0511803-04, WG216870-4)					
Aroclor 1221	ND	ND	ug/l	NC	30
Aroclor 1232	ND	ND	ug/l	NC	30
Aroclor 1242/1016	ND	ND	ug/l	NC	30
Aroclor 1248	ND	ND	ug/l	NC	30
Aroclor 1254	ND	ND	ug/l	NC	30
Aroclor 1260	ND	ND	ug/l	NC	30

Surrogate(s)	Recovery				QC Criteria
2,4,5,6-Tetrachloro-m-xylene	56.0	73.0	%	26	30-150
Decachlorobiphenyl	16.0	30.0	%	61	30-150

ALPHA ANALYTICAL LABORATORIES
QUALITY ASSURANCE BATCH SPIKE ANALYSES

Laboratory Job Number: L0511951

Parameter	% Recovery	QC Criteria
Cyanide, Total LCS for sample(s) 01 (WG217464-2)		
Cyanide, Total	107	90-110
Chlorine, Total Residual LCS for sample(s) 01 (WG216701-1)		
Chlorine, Total Residual	101	
TPH LCS for sample(s) 01 (WG217526-2)		
TPH	85	64-132
Chromium, Hexavalent LCS for sample(s) 01 (WG216700-2)		
Chromium, Hexavalent	100	
Total Metals LCS for sample(s) 01 (WG217584-4)		
Antimony, Total	93	
Cadmium, Total	110	
Lead, Total	104	
Silver, Total	86	
Total Metals LCS for sample(s) 01 (WG216987-4)		
Arsenic, Total	112	
Chromium, Total	100	
Copper, Total	104	
Iron, Total	95	
Nickel, Total	105	
Selenium, Total	124	
Zinc, Total	108	
Total Metals LCS for sample(s) 01 (WG218157-1)		
Mercury, Total	100	
Pesticides by GC 504 LCS for sample(s) 01 (WG218166-2)		
1,2-Dibromoethane	101	
Volatile Organics by GC/MS 624 LCS for sample(s) 01 (WG216901-7)		
Methylene chloride	75	
1,1-Dichloroethane	82	
Chloroform	79	
Carbon tetrachloride	99	
1,2-Dichloropropane	81	
Dibromochloromethane	92	
1,1,2-Trichloroethane	94	
2-Chloroethylvinyl ether	97	
Tetrachloroethene	103	
Chlorobenzene	103	
Trichlorofluoromethane	86	
1,2-Dichloroethane	82	
1,1,1-Trichloroethane	86	
Bromodichloromethane	94	
trans-1,3-Dichloropropene	100	

ALPHA ANALYTICAL LABORATORIES
QUALITY ASSURANCE BATCH SPIKE ANALYSES

Laboratory Job Number: L0511951

Continued

Parameter	% Recovery	QC Criteria
Volatile Organics by GC/MS 624 LCS for sample(s) 01 (WG216901-7)		
cis-1,3-Dichloropropene	96	
Bromoform	92	
1,1,2,2-Tetrachloroethane	94	
Benzene	81	
Toluene	102	
Ethylbenzene	105	
Chloromethane	65	
Bromomethane	73	
Vinyl chloride	60	
Chloroethane	61	
1,1-Dichloroethene	67	
trans-1,2-Dichloroethene	83	
cis-1,2-Dichloroethene	87	
Trichloroethene	87	
1,2-Dichlorobenzene	105	
1,3-Dichlorobenzene	104	
1,4-Dichlorobenzene	106	
p/m-Xylene	110	
o-Xylene	106	
XYLENE (TOTAL)	108	
Styrene	105	
Acetone	80	
Carbon disulfide	77	
2-Butanone	83	
Vinyl acetate	105	
4-Methyl-2-pentanone	94	
2-Hexanone	96	
Acrolein	66	
Acrylonitrile	84	
Surrogate(s)		
Pentafluorobenzene	105	
Fluorobenzene	89	
4-Bromofluorobenzene	113	
SVOC's by GC/MS 8270 LCS for sample(s) 01 (WG217258-2)		
Acenaphthene	72	
1,2,4-Trichlorobenzene	57	
2-Chloronaphthalene	73	
1,2-Dichlorobenzene	49	
1,4-Dichlorobenzene	47	
2,4-Dinitrotoluene	92	
2,6-Dinitrotoluene	108	
Fluoranthene	98	
4-Chlorophenyl phenyl ether	79	
n-Nitrosodi-n-propylamine	63	
Butyl benzyl phthalate	104	
Anthracene	78	

ALPHA ANALYTICAL LABORATORIES
QUALITY ASSURANCE BATCH SPIKE ANALYSES

Laboratory Job Number: L0511951

Continued

Parameter	% Recovery	QC Criteria
SVOC's by GC/MS 8270 LCS for sample(s) 01 (WG217258-2)		
Pyrene	94	
Hexachloropropene	58	
P-Chloro-M-Cresol	77	
2-Chlorophenol	55	
2-Nitrophenol	70	
4-Nitrophenol	45	
2,4-Dinitrophenol	90	
Pentachlorophenol	94	
Phenol	25	
Surrogate(s)		
2-Fluorophenol	38	
Phenol-d6	34	
Nitrobenzene-d5	68	
2-Fluorobiphenyl	76	
2,4,6-Tribromophenol	88	
4-Terphenyl-d14	103	
PAH by GC/MS SIM 8270M LCS for sample(s) 01 (WG217259-2)		
Acenaphthene	69	46-118
2-Chloronaphthalene	75	
Fluoranthene	94	
Anthracene	71	
Pyrene	99	26-127
Pentachlorophenol	85	9-103
Surrogate(s)		
2-Fluorophenol	44	21-120
Phenol-d6	36	10-120
Nitrobenzene-d5	64	23-120
2-Fluorobiphenyl	65	43-120
2,4,6-Tribromophenol	71	10-120
4-Terphenyl-d14	88	33-120
Polychlorinated Biphenyls LCS for sample(s) 01 (WG216870-2)		
Aroclor 1242/1016	70	30-150
Aroclor 1260	74	30-150
Surrogate(s)		
2,4,5,6-Tetrachloro-m-xylene	63	30-150
Decachlorobiphenyl	50	30-150
Cyanide, Total SPIKE for sample(s) 01 (L0511914-02, WG217464-3)		
Cyanide, Total	101	80-120

ALPHA ANALYTICAL LABORATORIES
QUALITY ASSURANCE BATCH SPIKE ANALYSES

Laboratory Job Number: L0511951

Continued

Parameter	% Recovery	QC Criteria
TPH SPIKE for sample(s) 01 (L0512267-01, WG217526-3)		
TPH	82	64-132
Chromium, Hexavalent SPIKE for sample(s) 01 (L0511951-01, WG216700-3)		
Chromium, Hexavalent	102	
Total Metals SPIKE for sample(s) 01 (L0512184-01, WG217584-2)		
Antimony, Total	87	
Cadmium, Total	110	
Lead, Total	100	
Silver, Total	84	
Total Metals SPIKE for sample(s) 01 (L0511951-01, WG216987-2)		
Arsenic, Total	109	
Chromium, Total	100	
Copper, Total	104	
Iron, Total	100	
Nickel, Total	103	
Selenium, Total	122	
Zinc, Total	110	
Total Metals SPIKE for sample(s) 01 (L0512140-01, WG218157-2)		
Mercury, Total	119	
Pesticides by GC 504 SPIKE for sample(s) 01 (L0512284-01, WG218166-3)		
1,2-Dibromoethane	103	
Volatile Organics by GC/MS 624 SPIKE for sample(s) 01 (L0511860-09, WG216901-1)		
Methylene chloride	70	
1,1-Dichloroethane	79	
Chloroform	74	
Carbon tetrachloride	73	
1,2-Dichloropropane	79	
Dibromochloromethane	80	
1,1,2-Trichloroethane	84	
2-Chloroethylvinyl ether	56	
Tetrachloroethene	87	
Chlorobenzene	91	
Trichlorofluoromethane	72	
1,2-Dichloroethane	81	
1,1,1-Trichloroethane	79	
Bromodichloromethane	78	
trans-1,3-Dichloropropene	73	
cis-1,3-Dichloropropene	78	
Bromoform	79	
1,1,2,2-Tetrachloroethane	87	
Benzene	80	
Toluene	86	
Ethylbenzene	90	

ALPHA ANALYTICAL LABORATORIES
QUALITY ASSURANCE BATCH SPIKE ANALYSES

Laboratory Job Number: L0511951

Continued

Parameter	% Recovery	QC Criteria
Volatile Organics by GC/MS 624 SPIKE for sample(s) 01 (L0511860-09, WG216901-1)		
Chloromethane	65	
Bromomethane	68	
Vinyl chloride	59	
Chloroethane	68	
1,1-Dichloroethene	76	
trans-1,2-Dichloroethene	79	
cis-1,2-Dichloroethene	81	
Trichloroethene	83	
1,2-Dichlorobenzene	95	
1,3-Dichlorobenzene	92	
1,4-Dichlorobenzene	93	
p/m-Xylene	92	
o-Xylene	93	
XYLENE (TOTAL)	93	
Styrene	89	
Acetone	65	
Carbon disulfide	66	
2-Butanone	75	
Vinyl acetate	74	
4-Methyl-2-pentanone	80	
2-Hexanone	78	
Acrolein	72	
Acrylonitrile	81	
Surrogate(s)		
Pentafluorobenzene	95	
Fluorobenzene	87	
4-Bromofluorobenzene	97	
Polychlorinated Biphenyls SPIKE for sample(s) 01 (L0511803-04, WG216870-3)		
Aroclor 1242/1016	80	30-150
Aroclor 1260	53	30-150
Surrogate(s)		
2,4,5,6-Tetrachloro-m-xylene	63	30-150
Decachlorobiphenyl	25	30-150

ALPHA ANALYTICAL LABORATORIES
QUALITY ASSURANCE BATCH MS/MSD ANALYSIS

Laboratory Job Number: L0511951

Parameter	MS %	MSD %	RPD	RPD Limit	MS/MSD Limits
SVOC's by GC/MS 8270 for sample(s) 01 (L0511951-01, WG217258-4)					
Acenaphthene	72	62	15		
1,2,4-Trichlorobenzene	58	58	0		
2-Chloronaphthalene	72	67	7		
1,2-Dichlorobenzene	53	48	10		
1,4-Dichlorobenzene	48	47	2		
2,4-Dinitrotoluene	86	86	0		
2,6-Dinitrotoluene	100	96	4		
Fluoranthene	96	91	5		
4-Chlorophenyl phenyl ether	77	67	14		
n-Nitrosodi-n-propylamine	62	53	16		
Butyl benzyl phthalate	100	100	0		
Anthracene	72	72	0		
Pyrene	91	86	6		
Hexachloropropene	67	62	8		
P-Chloro-M-Cresol	82	77	6		
2-Chlorophenol	58	55	5		
2-Nitrophenol	70	65	7		
4-Nitrophenol	72	70	3		
2,4-Dinitrophenol	91	86	6		
Pentachlorophenol	91	91	0		
Phenol	41	36	13		
Surrogate(s)					
2-Fluorophenol	50	46	8		
Phenol-d6	56	50	11		
Nitrobenzene-d5	70	63	11		
2-Fluorobiphenyl	76	67	13		
2,4,6-Tribromophenol	91	88	3		
4-Terphenyl-d14	101	94	7		
PAH by GC/MS SIM 8270M for sample(s) 01 (L0511951-01, WG217259-4)					
Acenaphthene	58	58	0	40	46-118
2-Chloronaphthalene	67	62	8	40	
Fluoranthene	82	82	0	40	
Anthracene	58	58	0	40	
Pyrene	91	91	0	40	26-127
Pentachlorophenol	86	86	0	40	9-103
Surrogate(s)					
2-Fluorophenol	66	59	11		21-120
Phenol-d6	65	57	13		10-120
Nitrobenzene-d5	73	67	9		23-120
2-Fluorobiphenyl	68	59	14		43-120
2,4,6-Tribromophenol	82	83	1		10-120
4-Terphenyl-d14	77	76	1		33-120

ALPHA ANALYTICAL LABORATORIES
QUALITY ASSURANCE BATCH BLANK ANALYSIS

Laboratory Job Number: L0511951

PARAMETER	RESULT	UNITS	RDL	REF	METHOD	DATE PREP	DATE ANAL	ID
Blank Analysis for sample(s) 01 (WG216894-1)								
Solids, Total Suspended	ND	mg/l	5.0	4	160.2		1011 11:25	DT
Blank Analysis for sample(s) 01 (WG217464-1)								
Cyanide, Total	ND	mg/l	0.005	4	335.2	1015 11:00	1017 15:37	DD
Blank Analysis for sample(s) 01 (WG216701-2)								
Chlorine, Total Residual	ND	mg/l	0.05	4	330.1		1008 01:40	DD
Blank Analysis for sample(s) 01 (WG217526-1)								
TPH	ND	mg/l	4.00			1014 14:00	1017 12:30	AT
Blank Analysis for sample(s) 01 (WG216700-1)								
Chromium, Hexavalent	ND	mg/l	0.01	30	3500CR-D	1007 22:00	1007 22:00	JT
Blank Analysis for sample(s) 01 (WG217584-3)								
Total Metals				19	200.7			
Antimony, Total	ND	mg/l	0.005	3	200.9	1017 20:30	1018 16:50	PY
Cadmium, Total	ND	mg/l	0.0002	4	213.2	1017 20:30	1018 20:01	PY
Lead, Total	ND	mg/l	0.001	3	200.9	1017 20:30	1019 00:08	PY
Silver, Total	ND	mg/l	0.0004	4	272.2	1017 20:30	1019 11:49	PY
Blank Analysis for sample(s) 01 (WG216987-3)								
Total Metals				19	200.7			
Arsenic, Total	ND	mg/l	0.005	19	200.7	1011 19:00	1012 10:51	MG
Chromium, Total	ND	mg/l	0.01	19	200.7	1011 19:00	1012 10:51	MG
Copper, Total	ND	mg/l	0.01	19	200.7	1011 19:00	1012 10:51	MG
Iron, Total	ND	mg/l	0.05	19	200.7	1011 19:00	1012 10:51	MG
Nickel, Total	ND	mg/l	0.025	19	200.7	1011 19:00	1012 10:51	MG
Selenium, Total	ND	mg/l	0.005	19	200.7	1011 19:00	1012 10:51	MG
Zinc, Total	ND	mg/l	0.05	19	200.7	1011 19:00	1012 10:51	MG
Blank Analysis for sample(s) 01 (WG218157-4)								
Total Metals								
Mercury, Total	ND	mg/l	0.0002	4	245.2	1021 14:00	1021 16:40	HG
Blank Analysis for sample(s) 01 (WG218166-1)								
Pesticides by GC 504				14	504.1	1021 11:30	1021 12:40	JB
1,2-Dibromoethane	ND	ug/l	0.020					

ALPHA ANALYTICAL LABORATORIES
QUALITY ASSURANCE BATCH BLANK ANALYSIS

Laboratory Job Number: L0511951

Continued

PARAMETER	RESULT	UNITS	RDL	REF	METHOD	DATE PREP	DATE ANAL	ID
Blank Analysis for sample(s) 01 (WG216901-8)								
Volatile Organics by GC/MS 624				5	624		1011 09:18	MM
Methylene chloride	ND	ug/l	5.0					
1,1-Dichloroethane	ND	ug/l	1.5					
Chloroform	ND	ug/l	1.5					
Carbon tetrachloride	ND	ug/l	1.0					
1,2-Dichloropropane	ND	ug/l	3.5					
Dibromochloromethane	ND	ug/l	1.0					
1,1,2-Trichloroethane	ND	ug/l	1.5					
2-Chloroethylvinyl ether	ND	ug/l	10.					
Tetrachloroethene	ND	ug/l	1.5					
Chlorobenzene	ND	ug/l	3.5					
Trichlorofluoromethane	ND	ug/l	5.0					
1,2-Dichloroethane	ND	ug/l	1.5					
1,1,1-Trichloroethane	ND	ug/l	2.0					
Bromodichloromethane	ND	ug/l	1.0					
trans-1,3-Dichloropropene	ND	ug/l	1.5					
cis-1,3-Dichloropropene	ND	ug/l	1.5					
Bromoform	ND	ug/l	1.0					
1,1,2,2-Tetrachloroethane	ND	ug/l	1.0					
Benzene	ND	ug/l	1.0					
Toluene	ND	ug/l	1.0					
Ethylbenzene	ND	ug/l	1.0					
Chloromethane	ND	ug/l	10.					
Bromomethane	ND	ug/l	5.0					
Vinyl chloride	ND	ug/l	2.0					
Chloroethane	ND	ug/l	2.0					
1,1-Dichloroethene	ND	ug/l	1.0					
trans-1,2-Dichloroethene	ND	ug/l	1.5					
cis-1,2-Dichloroethene	ND	ug/l	1.0					
Trichloroethene	ND	ug/l	1.0					
1,2-Dichlorobenzene	ND	ug/l	5.0					
1,3-Dichlorobenzene	ND	ug/l	5.0					
1,4-Dichlorobenzene	ND	ug/l	5.0					
p/m-Xylene	ND	ug/l	2.0					
o-xylene	ND	ug/l	1.0					
Xylene (Total)	ND	ug/l	2.0					
Styrene	ND	ug/l	1.0					
Acetone	ND	ug/l	10.					
Carbon disulfide	ND	ug/l	5.0					
2-Butanone	ND	ug/l	10.					
Vinyl acetate	ND	ug/l	20.					
4-Methyl-2-pentanone	ND	ug/l	10.					
2-Hexanone	ND	ug/l	10.					
Acrolein	ND	ug/l	20.					
Acrylonitrile	ND	ug/l	10.					

ALPHA ANALYTICAL LABORATORIES
QUALITY ASSURANCE BATCH BLANK ANALYSIS

Laboratory Job Number: L0511951

Continued

PARAMETER	RESULT	UNITS	RDL	REF	METHOD	DATE PREP	DATE ANAL	ID
Blank Analysis for sample(s) 01 (WG216901-8)								
Volatile Organics by GC/MS 624 cont'd				5	624		1011 09:18	MM
Surrogate(s)	Recovery		QC Criteria					
Pentafluorobenzene	99.0	%						
Fluorobenzene	91.0	%						
4-Bromofluorobenzene	109.	%						
Blank Analysis for sample(s) 01 (WG217258-1)								
SVOC's by GC/MS 8270				1	8270C	1013 19:00	1020 11:44	RL
Acenaphthene	ND	ug/l	5.0					
Benzidine	ND	ug/l	50.					
1,2,4-Trichlorobenzene	ND	ug/l	5.0					
Hexachlorobenzene	ND	ug/l	5.0					
Bis(2-chloroethyl)ether	ND	ug/l	5.0					
1-Chloronaphthalene	ND	ug/l	5.0					
2-Chloronaphthalene	ND	ug/l	6.0					
1,2-Dichlorobenzene	ND	ug/l	5.0					
1,3-Dichlorobenzene	ND	ug/l	5.0					
1,4-Dichlorobenzene	ND	ug/l	5.0					
3,3'-Dichlorobenzidine	ND	ug/l	50.					
2,4-Dinitrotoluene	ND	ug/l	6.0					
2,6-Dinitrotoluene	ND	ug/l	5.0					
Azobenzene	ND	ug/l	5.0					
Fluoranthene	ND	ug/l	5.0					
4-Chlorophenyl phenyl ether	ND	ug/l	5.0					
4-Bromophenyl phenyl ether	ND	ug/l	5.0					
Bis(2-chloroisopropyl)ether	ND	ug/l	5.0					
Bis(2-chloroethoxy)methane	ND	ug/l	5.0					
Hexachlorobutadiene	ND	ug/l	10.					
Hexachlorocyclopentadiene	ND	ug/l	10.					
Hexachloroethane	ND	ug/l	5.0					
Isophorone	ND	ug/l	5.0					
Naphthalene	ND	ug/l	5.0					
Nitrobenzene	ND	ug/l	5.0					
NDPA/DPA	ND	ug/l	15.					
n-Nitrosodi-n-propylamine	ND	ug/l	5.0					
Bis(2-ethylhexyl)phthalate	ND	ug/l	10.					
Butyl benzyl phthalate	ND	ug/l	5.0					
Di-n-butylphthalate	ND	ug/l	5.0					
Di-n-octylphthalate	ND	ug/l	5.0					
Diethyl phthalate	ND	ug/l	5.0					
Dimethyl phthalate	ND	ug/l	5.0					
Benzo(a)anthracene	ND	ug/l	5.0					
Benzo(a)pyrene	ND	ug/l	5.0					
Benzo(b)fluoranthene	ND	ug/l	5.0					
Benzo(k)fluoranthene	ND	ug/l	5.0					
Chrysene	ND	ug/l	5.0					
Acenaphthylene	ND	ug/l	5.0					

ALPHA ANALYTICAL LABORATORIES
QUALITY ASSURANCE BATCH BLANK ANALYSIS

Laboratory Job Number: L0511951

Continued

PARAMETER	RESULT	UNITS	RDL	REF	METHOD	DATE PREP	DATE ANAL	ID
Blank Analysis for sample(s) 01 (WG217258-1)								
SVOC's by GC/MS 8270 cont'd				1	8270C	1013 19:00	1020 11:44	RL
Anthracene	ND	ug/l	5.0					
Benzo(ghi)perylene	ND	ug/l	5.0					
Fluorene	ND	ug/l	5.0					
Phenanthrene	ND	ug/l	5.0					
Dibenzo(a,h)anthracene	ND	ug/l	5.0					
Indeno(1,2,3-cd)pyrene	ND	ug/l	7.0					
Pyrene	ND	ug/l	5.0					
Benzo(e)pyrene	ND	ug/l	5.0					
Biphenyl	ND	ug/l	5.0					
Perylene	ND	ug/l	5.0					
Aniline	ND	ug/l	10.					
4-Chloroaniline	ND	ug/l	5.0					
1-Methylnaphthalene	ND	ug/l	5.0					
2-Nitroaniline	ND	ug/l	5.0					
3-Nitroaniline	ND	ug/l	5.0					
4-Nitroaniline	ND	ug/l	7.0					
Dibenzofuran	ND	ug/l	5.0					
a,a-Dimethylphenethylamine	ND	ug/l	50.					
Hexachloropropene	ND	ug/l	10.					
Nitrosodi-n-butylamine	ND	ug/l	10.					
2-Methylnaphthalene	ND	ug/l	5.0					
1,2,4,5-Tetrachlorobenzene	ND	ug/l	20.					
Pentachlorobenzene	ND	ug/l	20.					
a-Naphthylamine	ND	ug/l	20.					
b-Naphthylamine	ND	ug/l	20.					
Phenacetin	ND	ug/l	10.					
Dimethoate	ND	ug/l	20.					
4-Aminobiphenyl	ND	ug/l	10.					
Pentachloronitrobenzene	ND	ug/l	10.					
Isodrin	ND	ug/l	10.					
p-Dimethylaminoazobenzene	ND	ug/l	10.					
Chlorobenzilate	ND	ug/l	20.					
3-Methylcholanthrene	ND	ug/l	20.					
Ethyl Methanesulfonate	ND	ug/l	15.					
Acetophenone	ND	ug/l	20.					
Nitrosodipiperidine	ND	ug/l	20.					
7,12-Dimethylbenz(a)anthracene	ND	ug/l	10.					
n-Nitrosodimethylamine	ND	ug/l	50.					
2,4,6-Trichlorophenol	ND	ug/l	5.0					
p-Chloro-m-cresol	ND	ug/l	5.0					
2-Chlorophenol	ND	ug/l	6.0					
2,4-Dichlorophenol	ND	ug/l	10.					
2,4-Dimethylphenol	ND	ug/l	10.					
2-Nitrophenol	ND	ug/l	20.					
4-Nitrophenol	ND	ug/l	10.					
2,4-Dinitrophenol	ND	ug/l	20.					

ALPHA ANALYTICAL LABORATORIES
QUALITY ASSURANCE BATCH BLANK ANALYSIS

Laboratory Job Number: L0511951

Continued

PARAMETER	RESULT	UNITS	RDL	REF	METHOD	DATE PREP	DATE ANAL	ID
Blank Analysis for sample(s) 01 (WG217258-1)								
SVOC's by GC/MS 8270 cont'd				1	8270C	1013 19:00	1020 11:44	RL
4,6-Dinitro-o-cresol	ND	ug/l	20.					
Pentachlorophenol	ND	ug/l	20.					
Phenol	ND	ug/l	7.0					
2-Methylphenol	ND	ug/l	6.0					
3-Methylphenol/4-Methylphenol	ND	ug/l	6.0					
2,4,5-Trichlorophenol	ND	ug/l	5.0					
2,6-Dichlorophenol	ND	ug/l	10.					
Benzoic Acid	ND	ug/l	50.					
Benzyl Alcohol	ND	ug/l	10.					
Carbazole	ND	ug/l	5.0					
Pyridine	ND	ug/l	50.					
2-Picoline	ND	ug/l	20.					
Pronamide	ND	ug/l	20.					
Methyl methanesulfonate	ND	ug/l	20.					
Surrogate(s)	Recovery		QC Criteria					
2-Fluorophenol	38.0	%						
Phenol-d6	31.0	%						
Nitrobenzene-d5	60.0	%						
2-Fluorobiphenyl	53.0	%						
2,4,6-Tribromophenol	73.0	%						
4-Terphenyl-d14	99.0	%						
Blank Analysis for sample(s) 01 (WG217259-1)								
PAH by GC/MS SIM 8270M				1	8270C-M	1013 19:00	1018 16:34	RL
Acenaphthene	ND	ug/l	0.20					
2-Chloronaphthalene	ND	ug/l	0.20					
Fluoranthene	ND	ug/l	0.20					
Hexachlorobutadiene	ND	ug/l	0.50					
Naphthalene	ND	ug/l	0.20					
Benzo(a)anthracene	ND	ug/l	0.20					
Benzo(a)pyrene	ND	ug/l	0.20					
Benzo(b)fluoranthene	ND	ug/l	0.20					
Benzo(k)fluoranthene	ND	ug/l	0.20					
Chrysene	ND	ug/l	0.20					
Acenaphthylene	ND	ug/l	0.20					
Anthracene	ND	ug/l	0.20					
Benzo(ghi)perylene	ND	ug/l	0.20					
Fluorene	ND	ug/l	0.20					
Phenanthrene	ND	ug/l	0.20					
Dibenzo(a,h)anthracene	ND	ug/l	0.20					
Indeno(1,2,3-cd)Pyrene	ND	ug/l	0.20					
Pyrene	ND	ug/l	0.20					
1-Methylnaphthalene	ND	ug/l	0.20					
2-Methylnaphthalene	ND	ug/l	0.20					
Pentachlorophenol	ND	ug/l	0.80					

ALPHA ANALYTICAL LABORATORIES
QUALITY ASSURANCE BATCH BLANK ANALYSIS

Laboratory Job Number: L0511951

Continued

PARAMETER	RESULT	UNITS	RDL	REF	METHOD	DATE PREP	DATE ANAL	ID
Blank Analysis for sample(s) 01 (WG217259-1)								
PAH by GC/MS SIM 8270M cont'd				1	8270C-M	1013 19:00	1018 16:34	RL
Hexachlorobenzene	ND	ug/l	0.80					
Perylene	ND	ug/l	0.20					
Biphenyl	ND	ug/l	0.20					
2,6-Dimethylnaphthalene	ND	ug/l	0.20					
1-Methylphenanthrene	ND	ug/l	0.20					
Benzo(e)Pyrene	ND	ug/l	0.20					
Hexachloroethane	ND	ug/l	0.80					
Surrogate(s)	Recovery		QC Criteria					
2-Fluorophenol	48.0	%	21-120					
Phenol-d6	38.0	%	10-120					
Nitrobenzene-d5	63.0	%	23-120					
2-Fluorobiphenyl	56.0	%	43-120					
2,4,6-Tribromophenol	58.0	%	10-120					
4-Terphenyl-d14	101.	%	33-120					
Blank Analysis for sample(s) 01 (WG216870-1)								
Polychlorinated Biphenyls				5	608	1010 21:45	1018 17:54	SS
Aroclor 1221	ND	ug/l	0.500					
Aroclor 1232	ND	ug/l	0.500					
Aroclor 1242/1016	ND	ug/l	0.500					
Aroclor 1248	ND	ug/l	0.500					
Aroclor 1254	ND	ug/l	0.500					
Aroclor 1260	ND	ug/l	0.500					
Surrogate(s)	Recovery		QC Criteria					
2,4,5,6-Tetrachloro-m-xylene	69.0	%	30-150					
Decachlorobiphenyl	64.0	%	30-150					

REFERENCES

1. Test Methods for Evaluating Solid Waste: Physical/Chemical Methods. EPA SW-846. Third Edition. Updates I - IIIA, 1997.

3. Methods for the Determination of Metals in Environmental Samples, Supplement I. EPA/600/R-94/111. May 1994.

4. Methods for Chemical Analysis of Water and Wastes. EPA 600/4-79-020. Revised March 1983.

5. Methods for the Organic Chemical Analysis of Municipal and Industrial Wastewater. Appendix A, Part 136, 40 CFR (Code of Federal Regulations).

14. Methods for the Determination of Organic Compounds in Finished Drinking Water and Raw Source Water. EPA/600/4-88/039, Revised July 1991.

19. Inductively Coupled Plasma Atomic Emission Spectrometric Method for Trace Element Analysis of Water and Wastes. Appendix C, Part 136, 40 CFR (Code of Federal Regulations). July 1, 1999 edition.

30. Standard Methods for the Examination of Water and Wastewater. APHA-AWWA-WPCF. 18th Edition. 1992.

GLOSSARY OF TERMS AND SYMBOLS

REF	Reference number in which test method may be found.
METHOD	Method number by which analysis was performed.
ID	Initials of the analyst.
ND	Not detected in comparison to the reported detection limit.
NI	Not Ignitable.
ug/cart	Micrograms per Cartridge.

LIMITATION OF LIABILITIES

Alpha Analytical, Inc. performs services with reasonable care and diligence normal to the analytical testing laboratory industry. In the event of an error, the sole and exclusive responsibility of Alpha Analytical, Inc., shall be to re-perform the work at it's own expense. In no event shall Alpha Analytical, Inc. be held liable for any incidental consequential or special damages, including but not limited to, damages in any way connected with the use of, interpretation of, information or analysis provided by Alpha Analytical, Inc.

We strongly urge our clients to comply with EPA protocol regarding sample volume, preservation, cooling, containers, sampling procedures, holding times and splitting of samples in the field.

CHAIN OF CUSTODY

PAGE 1 OF 1

Date Rec'd in Lab: 10/07/05

ALPHA Job #: L0511951

Eight Walkup Drive Westborough, MA 01581
TEL: 508-898-9220 FAX: 508-898-9193

Client Information

Client: Mabbett & Assoc
Address: 5 Alfred Circle
Bedford MA. 01730
Phone: 781-275-6050
Fax: " " 5651
Email: info@mabbett.com
☐ These samples have been previously analyzed by Alpha

Project Information

Project Name: Bary Warner
Project Location: New Bedford
Project #: 1989058.068
Project Manager: William Simons
ALPHA Quote #:

Turn-Around Time

☒ Standard ☐ RUSH (only confirmed if pre-approved!)
Date Due: 10/21/05 (two weeks) Time: 800 AM

Report Information - Data Deliverables

☐ FAX ☐ EMAIL
☒ ADEx ☐ Add'l Deliverables

Billing Information

☐ Same as Client info PO #: 4005

Regulatory Requirements/Report Limits

State /Fed Program	Criteria

MCP PRESUMPTIVE CERTAINTY - THESE QUESTIONS MUST BE ANSWERED

☐ Yes ☒ No Are MCP Analytical Methods Required?
☐ Yes ☐ No Are Drinking Water Samples Submitted?
☐ Yes ☐ No Have you met minimum field QC requirements?

Other Project Specific Requirements/Comments/Detection Limits:
Additional SO4 Analysis → Check with MARY DAVIS

SAMPLE HANDLING
Filtration
☐ Done
☐ Not needed
☐ Lab to do
Preservation
☐ Lab to do
(Please specify below)

ALPHA Lab ID (Lab Use Only)	Sample ID	Collection Date	Collection Time	Sample Matrix	Sampler's Initials	624	625	TPH 8100	Total Phenol	PCB's	TRC + Hex Cr	TSS	Total Cn	Total metal				Sample Specific Comments	TOTAL # BOTTLES
11951-01	Inf - 10-7-05	10/7/05	10:00	GW	DSA	X	X	X	X	X	X	X	X	X					
Container Type																			
Preservative						HCl	HNO3	H2SO4	N	N	N	N	NaOH	HNO3					

QUESTIONS ABOVE MUST BE ANSWERED FOR PRESUMPTIVE CERTAINTY

IS YOUR PROJECT MCP ?

Relinquished By:	Date/Time	Received By:	Date/Time
[illegible]	11:45 AM, 10/7/05	Kaulica [illegible]	10/07/05 11:45

Please print clearly, legibly and completely. Samples can not be logged in and turnaround time clock will not start until any ambiguities are resolved. All samples submitted are subject to Alpha's Payment Terms. See reverse side.

FORM NO: 01-01(rev. 14-May-04)

MSDS

Remede™

MATERIAL SAFETY DATA SHEET

IDENTITY - Tolcide PS-200

SECTION I - PRODUCT INFORMATION

MANUFACTURER'S NAME -

Remede Products
280 Callegari Drive
West Haven, CT 06516

TELEPHONE NUMBER FOR INFORMATION - 802-365-7200

EMERGENCY TELEPHONE NUMBER - CHEMTREC (800) 424-9300

DATE PREPARED - September 26, 1996

PREPARED BY -

Technical Manager
Remede Products
West Haven, CT 06516

1. CHEMICAL PRODUCT

PRODUCT NAME: Tolcide PS 200
GENERAL USE: Water Treatment
PRODUCT CODE: 34D
PRODUCT FORMULATION NAME: Phosphonium, tetrakis(hydroxymethyl)-, sulfate
CHEMICAL FAMILY: Phosphonium sulfates
GENERIC NAME: Tetrakishydroxymethyl phosphonium Sulfate, THPS

COMMENTS: To the best of our knowledge, this Material Safety Data Sheet conforms to the requirements of US OSHA 29 CFR 1910.1200.

2. COMPOSITION / INFORMATION ON INGREDIENTS

Chemical Name	Wt.%	CAS#/EINECS #
Phosphonium, tetrakis(hydroxymethyl)-, sulfate	~20	55566-30-8/259-709-0

EEC LABEL SYMBOL AND CLASSIFICATION

R 22: Harmful if swallowed.
R 41: Risk of serious danger to eyes.
R 43: May cause sensitization by skin contact

EEC Harmful - "Xn"

COMMENTS:

Product composition ranges shown are typical values for health, safety and environmental use and are not intended as specifications.

Remede

MATERIAL SAFETY DATA SHEET

3. HAZARDS IDENTIFICATION

EMERGENCY OVERVIEW

PHYSICAL APPEARANCE: Clear and colorless organic liquid with characteristic odor.

IMMEDIATE CONCERNS: DANGER! Causes eye damage. May be harmful if swallowed.

POTENTIAL HEALTH EFFECTS

EYES: Expected to cause significant irritation to the eyes.

SKIN: Not expected to cause significant irritation to the skin.

INGESTION: Expected to cause significant irritation to the digestive tract.

INHALATION: Expected to cause significant irritation to the lungs, upper respiratory tract, and nose.

SIGNS AND SYMPTOMS OF OVEREXPOSURE

EYES: Redness and possible burning and tearing of the eyes.

SKIN: Redness and possible burning of the skin.

INGESTION: Possible nausea and/or vomiting.

INHALATION: Coughing, burning, tightness of chest and/or shortness of breath.

ACUTE TOXICITY:

Not expected to cause significant adverse effects if absorbed through the skin.
May cause significant adverse effects if ingested.
Not expected to cause significant adverse effects if mist or vapor is inhaled.

CARCINOGENICITY:

Not Listed by NTP
Not listed by IARC
Not listed by OSHA

MUTAGENICITY:

This product was tested to be negative in two laboratory test tube studies and positive in another.

REPRODUCTIVE TOXICTY

REPRODUCTIVE EFFECTS: Not classified

TERATOGENIC EFFECTS: Not classified

MEDICAL CONDITIONS AGGRAVATED: Respiratory and liver diseases may be aggravated by exposure.

TARGET ORGAN STATEMENT: May cause gastrointestinal tract,liver and respiratory tract effects based on animal data.

SENSITIZATION: This material may cause sensitization of the skin.

COMMENTS: For detailed toxicological information see Section 11.

4. FIRST AID MEASURES

EYES: Immediately flush eyes with plenty of water for two to three minutes. Remove any contact lenses and continue flushing for 15 minutes. Get immediate medical attention.

SKIN: Remove contaminated clothing including shoes and wash skin with plenty of soap and water. If irritation occurs, seek medical advice. Wash contaminated clothing and shoes before reuse.

INGESTION: Wash out mouth with water and keep at rest. Seek immediate medical attention.

INHALATION: Remove from further exposure. Keep warm and at rest. If cough or other symptoms develop, seek medical attention.

5. FIRE FIGHTING MEASURES

FLASHPOINT AND METHOD: Not Available

FLAMMABLE LIMITS: Not Available

AUTOIGNITION TEMPERATURE: Not Available

FLAMMABLE CLASS: Nonflammable

FLAME PROPAGATION OR BURNING RATE OF SOLIDS: Not Applicable

GENERAL HAZARD: Evacuate personnel downwind of fire to avoid inhalation of irritating and/or harmful fumes and smoke.

EXTINGUISHING MEDIA: Chemical type foam, CO2 (Carbon Dioxide), Dry Chemical, Water Fog

HAZARDOUS COMBUSTION PRODUCTS: Oxides of carbon, phosphorus and sulfur

FIRE FIGHTING PROCEDURES: This product is a nonflammable substance. However, hazardous decomposition and combustion products may be formed in a fire situation. Cool exposed containers with water spray to prevent overheating.

FIRE FIGHTING EQUIPMENT: Respiratory and eye protection are required for fire fighting personnel. Full protective equipment (Bunker Gear) and self contained breathing apparatus (SCBA) should be used for all indoor fires and any significant outdoor fires. For small outdoor fires, which may easily be extinguished with a portable fire extinguisher, use of a SCBA may not be required.

SENSITIVE TO STATIC DISCHARGE: Not Available

SENSITIVITY TO IMPACT: Not Available

6. ACCIDENTAL RELEASE MEASURES

SMALL SPILL:

Construct temporary dikes of dirt, sand, or any appropriate readily available material to prevent spreading of the material.

Wearing the appropriate personal protective equipment designated in Section 8, move the leaking container to a containment area or rotate the container so that the opening is above the liquid level.

Absorb on diatomaceous earth or equivalent inert material. Shovel up and dispose of at an appropriate waste disposal facility according to current applicable laws and regulations, and product characteristics at time of disposal.

LARGE SPILL:

Construct temporary dikes of dirt, sand, or any appropriate readily available material to prevent spreading of the material.

Wearing the appropriate personal protective equipment designated in Section 8, close or cap valves and/or block or plug hole in leaking container and transfer to another container.

Contain material as described above and call the local fire or police department for immediate emergency assistance.

Remede™

MATERIAL SAFETY DATA SHEET

ENVIRONMENTAL PRECAUTIONS

WATER SPILL: Use appropriate containment to avoid runoff or release to sewer or waterways.

LAND SPILL: Use appropriate containment to avoid runoff or release to ground.

GENERAL PROCEDURES: Remove containers of strong oxidizers and strong bases from release area.

RELEASE NOTES: If spill could potentially enter any waterway, including intermittent dry creeks, contact the local authorities. If in the U.S., contact the US COAST GUARD NATIONAL RESPONSE CENTER toll free number 800-424-8802.

In case of accident or road spill notify:
CHEMTREC in USA at 800-424-9300

CANUTEC in Canada at 613-996-6666
CHEMTREC, other countries, at (International code)+1 202 483 7616

COMMENTS:

See Section 13 for disposal information and Section 15 for regulatory requirements.
Large and small spills may have a broad definition depending on the user's handling system. Therefore, the spill category must be defined at the point of release by technically qualified personnel.

7. HANDLING AND STORAGE

HANDLING:

Use appropriate personal protective equipment as specified in Section 8. Handle in a well ventilated area.

Handle and use in a manner consistent with good industrial/manufacturing techniques and practices.

STORAGE:

Store in unopened containers under cool and dry conditions.

Do not store with, or close to oxidizers and bases.

8. EXPOSURE CONTROLS / PERSONAL PROTECTION

EXPOSURE GUIDELINES:

OSHA HAZARDOUS COMPONENTS (29 CFR 1910.1200)

		EXPOSURE LIMITS					
		OSHA PEL		ACGIH TLV		Supplier OEL	
		ppm	mg/m³	ppm	mg/m³	ppm	mg/m³
Phosphonium, tetrakis(hydroxymethyl)-, sulfate	TWA	NL[1]	NL	NL	NL	NL	3
	STEL	NL	NL	NL	NL	NL	NL

OSHA TABLE COMMENTS:

1. NL=Not Listed

ENGINEERING CONTROLS: Adequate ventilation is normally required when handling or using this material.

If dust, vapors, or mists are generated, provide local exhaust ventilation to control airborne levels below the exposure limit.

Remede

MATERIAL SAFETY DATA SHEET

PERSONAL PROTECTIVE EQUIPMENT

EYES AND FACE: Wear safety glasses with side shields or goggles when handling this material.

SKIN: To prevent any contact, wear impervious protective clothing such as neoprene or butyl rubber gloves, apron, boots or whole bodysuit, as appropriate.

RESPIRATORY: Always wear NIOSH approved respiratory protective equipment when vapor or mists may exceed applicable concentration limits.

WORK HYGIENIC PRACTICES: Facilities storing or using this material should be equipped with an eyewash facility and a safety shower.
Good personal hygiene practices should always be followed.

COMMENTS: No PEL's, TLV's or OEL's for this product or it's ingredients are listed in the current issue of ACGIH's Guide to Occupational Exposure Values nor have they been determined by the manufacturer.

9. PHYSICAL AND CHEMICAL PROPERTIES

PHYSICAL STATE: Liquid

ODOR: Characteristic

APPEARANCE: Clear

COLOR: Colorless

pH: 3.2

VAPOR PRESSURE: Not Available

VAPOR DENSITY: Not Available

BOILING POINT: Not Available

FREEZING POINT: Not Available

MELTING POINT: Not Available

SOLUBILITY IN WATER: Miscible

EVAPORATION RATE: Not Available

DENSITY: 1.09 g/cc at 20°C (68°F)

SPECIFIC GRAVITY: 1.09 @ 20°C/4°C

VISCOSITY: 1.6Centistokes at 25°C (77°F)

MOLECULAR FORMULA: $3(C_4H_{12}O_4P).O_4S$

MOLECULAR WEIGHT: 406.3 g/gmol

COEFF. OIL/WATER: Not Available

Remede

MATERIAL SAFETY DATA SHEET

10. STABILITY AND REACTIVITY

STABLE: YES

HAZARDOUS POLYMERIZATION: NO

CONDITIONS TO AVOID: Heat, temperatures above 160°C.

STABILITY: The product is stable under normal ambient conditions of temperature and pressure.

POLYMERIZATION: Will not occur

HAZARDOUS DECOMPOSITION PRODUCTS: Phosphine, oxides of phosphorus, sulfur and carbon.

INCOMPATIBLE MATERIALS: Strong Oxidizers
Strong bases

11. TOXICOLOGICAL INFORMATION

ACUTE

DERMAL LD_{50}: 2000 mg/kg (rabbit)

ORAL LD_{50}: 575 mg/kg (rat)

INHALATION LC_{50}: 22 mg/l (1 hour)

EYE EFFECTS: This material is expected to cause significant irritation to the eyes.

SKIN EFFECTS: This material is not expected to cause significant irritation to the skin.

SENSITIZATION: This material is a Grade 1 - Weak Skin Sensitizer.

TARGET ORGANS: Eyes
Skin
Gastrointestinal tract
Respiratory system
Liver

CARCINOGENICITY:

Listed by IARC - No

Listed by NTP - No
In a two year study(NTP 1987) rats and mice dosed with THPS showed no signs of cancer attributable to the treatment.

Listed by OSHA - No

MUTAGENICITY: Negative in the Ames Test.
Clastogenic in an invitro assay for chromosomal abberations in Chinese Hamster Ovary cells.
Negative in cultured rat hepatocytes unscheduled DNA synthesis.

REPRODUCTIVE EFFECTS: This material is not a reproductive toxin, at low dose levels of 6 or 18 mg/kg/day for rabbits and 15 or 30 mg/kg/day for rats. At a high dose level of 60 mg/kg/day, both species showed maternal toxicity.

TERATOGENIC EFFECTS: This material is not a teratogen, at low dose levels of 6 or 18 mg/kg/day for rabbits and 15 or 30 mg/kg/day for rats. At a high dose level of 60 mg/kg/day, both species showed fetal toxicity.

Remode

MATERIAL SAFETY DATA SHEET

12. ECOLOGICAL INFORMATION

ENVIRONMENTAL DATA: Not expected to cause significant adverse environmental impact if material reaches waterways.

ECOTOXICOLOGICAL INFORMATION: 96 hr LC50 (Trout) = 119 mg/L; (Bluegill) = 93 mg/L
48 hr LC50 (Daphnia magna) = 19.4 mg/L

DISTRIBUTION: Not Available

CHEMICAL FATE INFORMATION: The material is readily biodegradable.

GENERAL COMMENTS: THPS has been shown to degrade rapidly once diluted to sub ppm concentrations forming trishydroxymethyl phosphine oxide which is classified as non-toxic.

13. DISPOSAL CONSIDERATIONS

DISPOSAL METHOD: Dispose of waste at an appropriate waste disposal facility according to current applicable laws and regulations.

FOR LARGE SPILLS: Contain material and call local authorities for emergency assistance. In consultation with the appropriate authorities, determine the disposal method or contact Albright & Wilson Americas.

PRODUCT DISPOSAL: Dispose of at a supervised incineration facility or an appropriate waste disposal facility according to current applicable laws and regulations and product characteristics at time of disposal.

EMPTY CONTAINER: Rinse drums with a suitable solvent and steam to remove vapors before disposal or reuse in accordance with applicable regulations.

GENERAL COMMENTS: Refer to Section 6, Accidental Release Measures for additional information.

14. TRANSPORT INFORMATION

DOT (DEPARTMENT OF TRANSPORTATION)

PROPER SHIPPING NAME: Not restricted by DOT.

TECHNICAL NAME: Phosphonium, tetrakis (hydroxymethyl)-, sulfate

LABEL: Use Product Identifier, "Trade Name", with technical name below.

CANADA TRANSPORT OF DANGEROUS GOODS

PROPER SHIPPING NAME: Not restricted

LABEL: Use Product Identifier, "Trade Name", with technical name below.

AIR (ICAO/IATA)

PROPER SHIPPING NAME: Not restricted

LABEL: Use Product Identifier, "Trade Name", with technical name below.

VESSEL (IMO/IMDG)

PROPER SHIPPING NAME: Not restricted

LABEL: Use Product Identifier, "Trade Name", with technical name below.

EUROPEAN TRANSPORTATION:

ADR/RID HAZARD CLASSIFICATION: Not Regulated

Remede

MATERIAL SAFETY DATA SHEET

15. REGULATORY INFORMATION

UNITED STATES

SARA TITLE III (SUPERFUND AMENDMENTS AND REAUTHORIZATION ACT)

311/312 HAZARD CATEGORIES:

FIRE: NO PRESSURE GENERATING: NO REACTIVITY: NO ACUTE: YES CHRONIC: NO

313 REPORTABLE INGREDIENTS: Not Applicable

TITLE III NOTES: Not Applicable

CERCLA (COMPREHENSIVE RESPONSE, COMPENSATION, AND LIABILITY ACT)

CERCLA RQ: Not Applicable

TSCA (TOXIC SUBSTANCE CONTROL ACT)

TSCA REGULATORY: All intentional ingredients are listed on the TSCA Inventory.

NATIONAL RESPONSE CENTER: U.S. Coast Guard National Center telephone # 1-800-424-8802

CANADA

WHMIS HAZARD SYMBOL AND CLASSIFICATION

Class D, Division 2, Subdivision B: Toxic Material
May cause eye irritation.

WHMIS Toxic

Class D, Division 2, Subdivision B: Toxic Material
Skin Sensitizer

WHMIS Toxic

WHMIS (WORKER HAZARDOUS MATERIALS INFORMATION SYSTEM): This product is WHMIS controlled.

CANADA INGREDIENT DISCLOSURE LIST: This product does contain ingredient(s) on the "Ingredient Disclosure List".

CANADIAN ENVIRONMENTAL PROTECTION ACT: All intentional ingredients are listed on the DSL (Domestic Substance List).

EUROPEAN COMMUNITY

EEC LABEL SYMBOL AND CLASSIFICATION

R 22: Harmful if swallowed.
R 41: Risk of serious danger to eyes.
R 43: May cause sensitization by skin contact.
S 24: Avoid contact with skin.
S 26: In case of contact with eyes, rinse immediately with plenty of water and seek medical advice.
S 36, S 37, S 39: Wear suitable protective clothing, gloves and eye/face protection.

EEC Harmful - "Xn"

Romede

MATERIAL SAFETY DATA SHEET

EUROPEAN COMMUNITY REGULATORY: All intentional ingredients are listed on the European's EINECS Inventory.

MEXICO

This product is considered to be an irritant according to Mexican Standard, Instruction No. 9, ANNEX 1.

STATES WITH SPECIAL REQUIREMENTS

Formaldehyde Pennsylvania: Contains material on Pennsylvania Special Hazardous Substance List present at >= 0.01%
Rhode Island: Contains material present on Rhode Island Hazardous Substance List at >=1% and 0.01% for carcinogens, mutagens and teratogens.
California Proposition 65: Warning: This product contains a chemical known to the state of California to cause cancer.
Massachusetts: Contains material that is present on Massachusetts Extraordinarily Hazardous Substance List at >= 1 ppm.

REGULATIONS

LOCAL REGULATIONS: Not Available

16. OTHER INFORMATION

REASON FOR ISSUE: New MSDS

APPROVED BY: William T. Stewart **TITLE:** Product Stewardship Manager

INFORMATION CONTACT: Product Stewardship Analyst

REVISION SUMMARY

Revision #: 2

This MSDS replaces the August 22, 1997 MSDS. Any changes in information are as follows:
In Section 3
Emergency Overview - Immediate Concerns (text) Potential Health Effects - Skin (text)

In Section 4
Firstaid - Skin (text)

In Section 5
Fire Fighting Procedures (text)

In Section 11
Skin Effects (text) Dermal LD50 (text) Dermal LD50 (Value) Dermal LD50 (Unit) Oral LD50 (text) Inhalation LC50 (text) Oral LD50 (Value) Oral LD50 (Unit) Inhalation LC50 (Value) Inhalation LC50 (Unit)

In Section 15
EEC Risk Phrase Codes

NFPA CODES

FIRE: 0 **HEALTH:** 2 **REACTIVITY:** 1

HMIS CODES

FIRE: 0 **HEALTH:** 2 **REACTIVITY:** 1 **PROTECTION:** D

Remede™

MATERIAL SAFETY DATA SHEET

MANUFACTURER SUPPLEMENTAL NOTES:

HAZARD WARNING! This product belongs to a chemical family that HAS BEEN TESTED in combination with Trimethylolpropane, Trimethylolpropane derived products or their corresponding Trimethylolpropane homologs for toxicity of the thermal decomposition products in the absence of flame. Products in this chemical family PRODUCED NO SIGNIFICANT ADVERSE HEALTH EFFECTS in laboratory animals. However, there is a possibility that this thermal decomposition may produce bicyclic phosphates and/or phosphites in combination with certain other phosphorus compounds. Bicyclic phosphates and phosphites have acute neurotoxic properties and may cause convulsive seizures in laboratory test animals. Follow all precautionary measures outlined in this Material Safety Data Sheet and/or contact Albright & Wilson Americas.

DATA SOURCES:

Inhalation LC50(rat) calculation based on LC50 = 5.5 mg/L 4hr. data from Albright & Wilson UK Limited MSDS. (Study conducted on Tolcide PS75)
Toxicological and ecological data based on Albright & Wilson UK Limited internal study reports.
Product Health Hazard Review by Consultant Toxicologist Dr. R. V. Blanke

MANUFACTURER DISCLAIMER: Information given herein is offered in good faith as accurate, but without guarantee. Conditions of use and suitability of the product for particular uses are beyond our control; all risks of use of the product are therefore assumed by the user. Nothing is intended as a recommendation for uses which infringe valid patents or as extending license under valid patents. Appropriate warnings and safe handling procedures should be provided to handlers and users.

Remede™

MATERIAL SAFETY DATA SHEET

IDENTITY - FeREMEDE

==========

SECTION I - PRODUCT INFORMATION

MANUFACTURER'S NAME -

REMEDE PRODUCTS
280 CALLEGARI DRIVE
PO BOX 489
WEST HAVEN, CT 06516

TELEPHONE NUMBER FOR INFORMATION - 802-365-7200

EMERGENCY TELEPHONE NUMBER - CHEMTREC 800/424-9300

DATE PREPARED - April 17, 1998

PREPARED BY -

TECHNICAL MANAGER
REMEDE PRODUCTS
WEST HAVEN, CT 06516

==========

SECTION II - HAZARDOUS INGREDIENTS/IDENTITY INFORMATION

COMPONENT	OSHA PEL	ACGIH TLV	OTHER LIMITS RECOMMENDED
Organic acid	NDA	NDA	-
Organic phosphorus compound	NDA	NDA	-
Tetrasodium ethylene-diaminetetraacetic acid	NDA	NDA	-
Sulfonated styrene copolymer	NDA	NDA	-
Carboxylated polymer	NDA	NDA	-

N/A = NOT APPLICABLE NDA = NO DATA AVAILABLE

FeREMEDE

Remede

MATERIAL SAFETY DATA SHEET

SECTION III - PHYSICAL/CHEMICAL CHARACTERISTICS

Boiling Point, (°F):	212 - 220
Specific Gravity, (water=1):	1.12 - 1.18
Vapor Pressure, (mm Hg.):	Similar to water
pH:	~ 4.5
Melting Point, (°F):	N/A
Freeze Point, (°F):	<32
Vapor Density, (air=1):	Similar to water
Evaporation Rate, (Butyl Acetate=1):	Similar to water
Solubility in Water:	Complete
Appearance and Odor:	Clear, pale yellow liquid with slight odor.

SECTION IV - FIRE AND EXPLOSION HAZARD DATA

Flash Point, (Method Used): Non-flammable/aqueous solution.

Flammable Limits:

LEL: N/A

UEL: N/A

Extinguishing Media:

N/A

Special Fire Fighting Procedures:

Firefighters should wear self-contained breathing apparatus and body covering protective clothing.

Unusual Fire and Explosion Hazards:

None

Remede

MATERIAL SAFETY DATA SHEET

==========

SECTION V - REACTIVITY DATA

Stability:

Stable: X Unstable: _____

Conditions to Avoid: None

Incompatibility (Materials to Avoid):

Quaternary amines, acids, sulfides and strong oxidizers.

Hazardous Decomposition or By-products:

Carbon dioxide, carbon monoxide and sulfur oxides.

Hazardous Polymerization:

May Occur _____ Will Not Occur X

Conditions to Avoid: NONE

==========

SECTION VI - HEALTH HAZARD DATA

Route(s) of Entry:

Inhalation? YES Skin? YES Ingestion? YES

Health Hazards (Acute and Chronic):

Mild irritant. May be harmful or fatal if swallowed.

Carcinogenicity:

NTP? NO IARC Monographs? NO OSHA Regulated? NO

Signs and Symptoms of Exposure:

Eye and skin irritant. Material may cause burns on exposed tissues with corneal injury which may result in permanent impairment of vision, or even blindness.

SECTION VI - HEALTH HAZARD DATA (cont'd)

Medical Conditions Generally Aggravated by Exposure:

Skin conditions.

Emergency and First Aid Procedures:

Ingestion:

NEVER give anything by mouth to an unconscious person. If swallowed, DO NOT INDUCE VOMITING. Give large quantities of water. If available, give several glasses of milk. If vomiting occurs spontaneously, keep airway clear. Seek medical attention immediately.

Inhalation:

Remove person to fresh air. If breathing has stopped, resuscitate and give oxygen if readily available. Seek medical attention immediately.

Eye Contact:

Immediately flush eyes with large amounts of water for at least 15 minutes, holding lids apart to ensure flushing of the entire surface. Washing eyes within 1 minute is essential to achieve maximum effectiveness. Seek medical attention immediately.

Skin Contact:

Immediately wash contaminated areas with plenty of water. Remove contaminated clothing and footwear and wash clothing before re-use. Discard footwear which cannot be decontaminated. Seek medical attention immediately.

==========

SECTION VII - PRECAUTIONS FOR SAFE HANDLING AND USE:

Steps to be Taken in Case Material is Released or Spilled:

Wear protective equipment outlined below. Absorb with inert ingredients such as sand or vermiculite, shovel into closeable container for disposal. Thoroughly flush residual with water.

Waste Disposal Method:

By methods consistent with applicable federal, state and local regulations.

Precautions to be Taken in Handling and Storing:

Wear recommended protective equipment when handling. Store in a cool, dry and well ventilated area.

Other Precautions:

None

SECTION VIII - CONTROL MEASURES:

Respiratory Protection:

Not normally required

Ventilation:

Local Exhaust: None

Mechanical: None

Special: None

Other: General Dilution

SECTION VIII - CONTROL MEASURES (cont'd):

Protective Gloves:

RUBBER or NEOPRENE gloves.

Eye Protection:

Safety goggles or full face shield.

Other Protective Equipment:

Protective clothing or rubber apron.

Work/Hygienic Practices:

Wash hands thoroughly after handling.

All information, recommendations and suggestions appearing herein concerning our product are based upon tests and data believed to be reliable. However, it is the user's responsibility to determine the safety, toxicity, and suitability for his own use of the product described herein. Since the actual use by others is beyond our control, no guarantee, expressed or implied, is made by Remede Products, Inc. as to the effects of such use, the results to be obtained, or the safety and toxicity of the product; nor does Remede Products, Inc. assume any liability arising out of use, by others, of the product referred to herein. The information herein is not to be construed as absolutely complete since additional information may be necessary or desirable when particular or exceptional conditions or circumstances exist or because of applicable laws or government regulations.

PRODUCT DATA

Remede PRODUCTS, INC.

TOLCIDE PS-200

Microbiocide

PRODUCT APPLICATION:

Tolcide PS-200 is a concentrated liquid microbiocide that provides broad-spectrum control of bacteria, fungi, and algae in recirculating cooling and hot water systems and air-stripping units. The product is particularly effective in controlling the growth of slime-forming and iron-reducing bacteria, microorganisms that can initiate a wide variety of operating problems, including reduced heat transfer rates, restricted water flows and highly destructive pitting-type corrosion. Unlike many alternative treatments, Tolcide PS-200 functions over an extremely wide pH range, so the product is ideally suited for use at facilities seeking to operate their systems at elevated cycles of concentration with no pH control.

The product is non-foaming and is compatible with other water treating chemicals. The product also displays some dispersing capabilities, so continued use will enhance system cleanliness. Tolcide PS-200 has an unusually benign environmental toxicity profile for an industrial biocide, and degrades rapidly upon discharge to non-toxic compounds. These properties result in safer handling of the product and reduced environmental impact. Tolcide PS-200 has received the U.S. Presidential Green chemistry Award, which was designed by the EPA to promote the use of chemicals with reduced environmental risks.

PRODUCT BENEFITS:

- Broad-spectrum microbiological activity
- Effective against both algae and bacteria
- Functions independently of pH levels
- Environmentally and hygienically-safe

PRODUCT DESCRIPTION:

Appearance:	Clear, water-white liquid
Specific Gravity:	1.07 - 1.13 @ 25 degrees C
Density:	9.09 pounds per gallon
pH:	4.0 - 5.0
Freeze Point:	Less than 32 degrees F
EPA Reg. No.:	4564-15/32461

PRODUCT DOSAGE:

As product feed rates are highly dependent upon the degree of microbiological contamination and other system operating conditions, your sales representative should be consulted for specific dosage recommendations.

The recommended feed method is either by slug addition or continuously as received to a by-pass feeder, cooling water line or tower basin. To eliminate handling problems, the feed equipment should preferably be of stainless steel or plastic construction.

PRODUCT SAFETY:

As with any industrial chemical, Tolcide PS-200 should be handled with appropriate care. Therefore, please have employees review the Material Safety Data Sheet (MSDS) to obtain recommended application, storage and disposal procedures before using the product in your facility.

PRODUCT PACKAGING:

Tolcide PS-200 is available in 55 and 30 gallon drums, 15 gallon containers and 5 gallon pails.

P.O. Box 331, Main Street, Newfane, VT 05345 • (802) 365-7200 • FAX# (802) 365-4652

Historical Commission

RECEIVED
OCT 11 2005
MASS. HIST. COMM

APPENDIX A
MASSACHUSETTS HISTORICAL COMMISSION
220 MORRISSEY BOULEVARD
BOSTON, MASS. 02125
617-727-8470, FAX: 617-727-5128

PROJECT NOTIFICATION FORM

Project Name: Borg Warner Automotive Power Train System Corporation

Location / Address: 200 Theodore Rice Blvd.

City / Town: New Bedford, MA 02745

Project Proponent

Name: Mabbett & Associates, Inc.

Address: 5 Alfred Circle

City/Town/Zip/Telephone: Bedford, MA 01730-2346

Agency license or funding for the project (list all licenses, permits, approvals, grants or other entitlements being sought from state and federal agencies).

Agency Name	Type of License or funding (specify)
U.S. Environmental Protection Agency	Remediation General Permit

Project Description (narrative):
Mabbett & Associates currently operates a groundwater remediation system on the Borg Warner site. We are seeking coverage under the EPA's new Remediation General Permit.

Does the project include demolition? If so, specify nature of demolition and describe the building(s) which are proposed for demolition.

No

Does the project include rehabilitation of any existing buildings? If so, specify nature of rehabilitation and describe the building(s) which are proposed for rehabilitation.

No

Does the project include new construction? If so, describe (attach plans and elevations if necessary).

No

After review of MHC files and the materials you submitted, it has been determined that this project is unlikely to affect significant historic or archaeological resources.

MHCRC .38678

Edward L. Bell
Senior Archaeologist
Massachusetts Historical Commission

Date
18 October 2005

MassGIS Map
(Endangered Species Habitat Conformance)

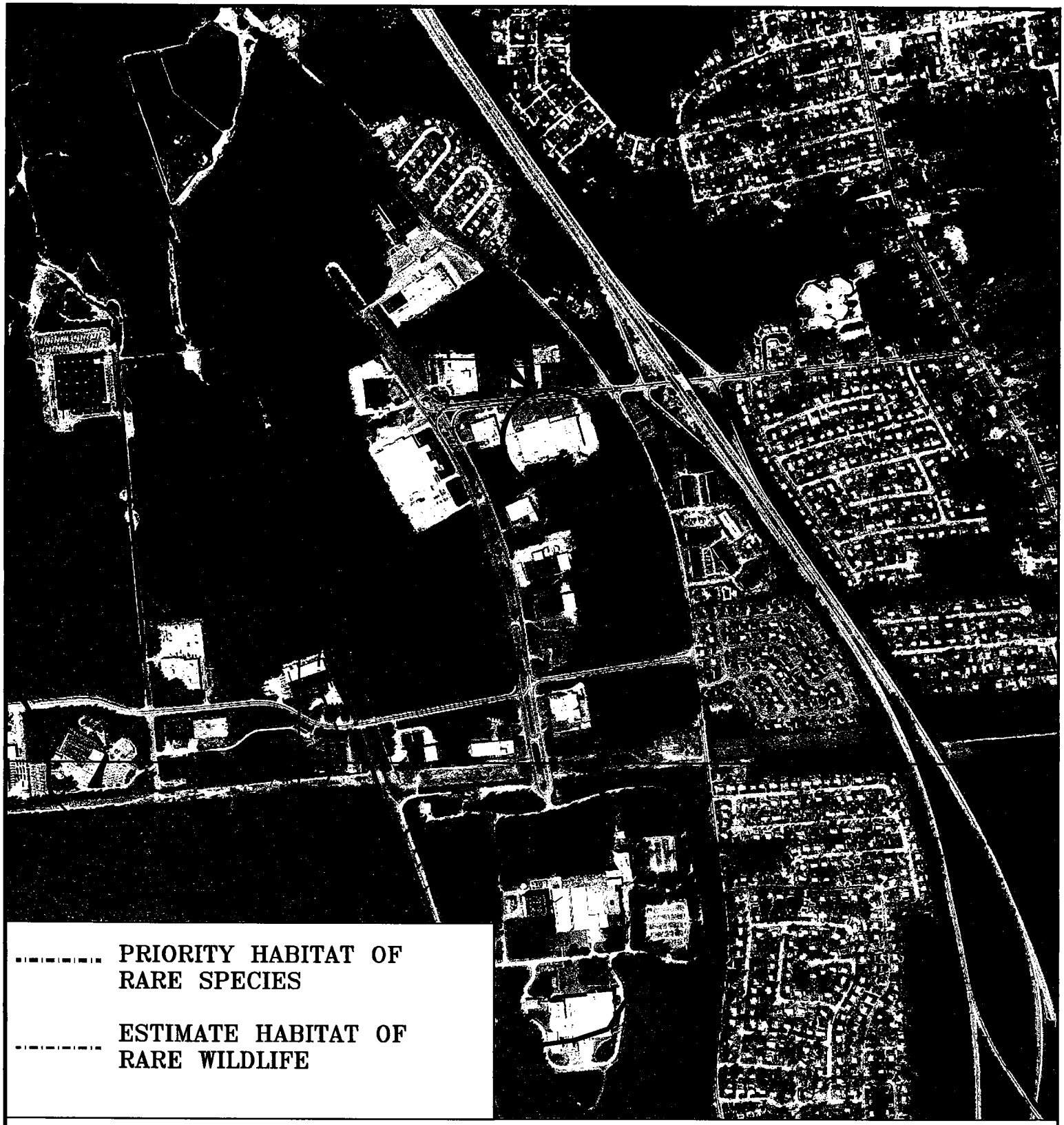

PRIORITY HABITAT OF RARE SPECIES

ESTIMATE HABITAT OF RARE WILDLIFE

B W A P T S C

NEW BEDFORD, MA

ENDANGERED SPECIES HABITAT MAP

SCALE: 1'=1000'

DR BY: WFS

DATE: 10/21/2005

AP BY:

DWG NO.

L-5

PROJ NO.

1989058.068